CITY OF SWEET HOME
CITY COUNCIL
AGENDA

August 09, 2022, 6:30 PM
Sweet Home City Hall, 3225 Main Street
Sweet Home, OR 97386

WIFI Passcode: guestwifi
PLEASE silence all cell phones – Anyone who wishes to speak, please sign in.

Mission Statement

The City of Sweet Home will work to build an economically strong community with an efficient and effective local government that will provide infrastructure and essential services to the citizens we serve. As efficient stewards of the valuable assets available, we will be responsive to the community while planning and preparing for the future.

Meeting Information

The City of Sweet Home is streaming the meeting via the Microsoft Teams platform and asks the public to consider this option. There will be opportunity for public input via the live stream. To view the meeting live, online visit http://live.sweethomeor.gov. If you don't have access to the internet you can call in to 1-971-203-2871, choose option #1 and enter the meeting ID to be logged in to the call. Meeting ID: 321 716 901#

This video stream and call in options are allowed under Council Rules, meet the requirements for Oregon Public Meeting Law, and have been approved by the Mayor and Chairperson of the meeting.

I. Call to Order and Pledge of Allegiance

II. Roll Call

III. Consent Agenda:

a) Approval of Minutes:

i) 2022-07-22 City Council Meeting - ES (pg. 3)

ii) 2022-07-26 City Council Minutes (pg. 5)

IV. Recognition of Visitors and Hearing of Petitions:

a) New Police Officer Swearing In Ceremony - Cody McPherson

b) Presentation from Oregon RAIN

V. Old Business:

a) Request for Council Action - Mahler WRF Improvements Project Ph1 Bid Posting (pg. 11)

b) Request for Council Action - 9th Avenue Waterline Replacement Project – Contract Award (pg. 1315)

c) Request for Council Action – Council of Governments Recruitment Services IGA - Amendment (pg. 1382)

VI. New Business:

a) Request for Council Action - Mahler WRF Special Inspections and Testing Services RFP (pg. 1384)

The location of the meeting is accessible to the disabled. If you have a disability that requires accommodation, advanced notice is requested by notifying the City Manager's Office at 541-367-8969.

b) Request for Council Action - Northside Park Property Line Adjustments (pg. 1422)

VII. Ordinance Bills

a) Request for Council Action and First Reading of Ordinance Bills

b) Second Reading of Ordinance Bills

c) Third Reading of Ordinance Bills (Roll Call Vote Required)

i) Ordinance Bill No. 4 for 2022 - Ordinance No. 1304 - Sweet Home Ordinance Declaring a Ban on Psilocybin Service Centers and the Manufacture of Psilocybin Products (pg. 1440)

VIII. Reports of Committees:

Ad Hoc Committee on Health

Administrative and Finance/Property

Area Commission on Transportation

Chamber of Commerce

Charter Review Committee

Council of Governments

Legislative Committee

Library Advisory Board

Park and Tree Committee

Solid Waste Advisory Council

Youth Advisory Council

IX. Reports of City Officials:

Mayor's Report

City Manager's Report

i) Request for Council Action – Rural Development Initiative Leadership Program (pg. 1442)

X. Department Director's Reports (1st meeting of the Month)

Library Services Director

i) Monthly Department Report - July 2022 (pg. 1448)

Community and Economic Development Director

i) Monthly Department Report - July 2022 (pg. 1450)

Public Works Director

i) Monthly Department Report - July 2022 (pg. 1454)

ii) DEQ Approval Letter for WWTP Ph1 (pg. 1457)

City Attorney

XI. Council Business for Good of the Order

a) Oregon Ethics Commission Newsletter (pg. 1474)

XII Adjournment

CITY OF SWEET HOME
CITY COUNCIL EXECUTIVE SESSION
MINUTES

July 22, 2022, 4:00 PM
Sweet Home City Hall, 3225 Main Street
Sweet Home, OR 97386

WIFI Passcode: guestwifi
PLEASE silence all cell phones – Anyone who wishes to speak, please sign in.
Please sign in if you wish to speak as Executive Sessions are not open to the public.

Meeting Information

Call to Order

The meeting was called to order at 4:30 PM.

Roll Call

PRESENT
Mayor Greg Mahler
President Pro Tem Diane Gerson
Councilor Dave Trask
Councilor Susan Coleman
Councilor Angelita Sanchez

ABSENT
Councilor Lisa Gourley
Councilor Dylan Richards

STAFF
Christy Wurster, City Manager Pro Tem
Julie Fisher, Administrative Services Manager

Ryan Schultz, OCWCOG

Mayor Mahler read the Executive Session Announcement.

The Sweet Home City Council will now meet in Executive Session to consider the employment of a City Manager.

The executive session is held pursuant to ORS192.660(2)(a) to consider the employment of a public officer, employee, staff member or individual agent.

Representatives of the news media and designated staff shall be allowed to attend the Executive Session. All other members of the audience are asked to remain outside the room during the Executive

Session. Representatives of the news media are specifically directed not to report on or otherwise disclose any of the deliberations or anything said about these subjects during the executive session, except to state the general subject of the session as previously announced.

No final action or final decision may be made in executive session.

Adjournment

The meeting adjourned at 6:50 PM.

_____
Mayor

ATTEST:

_____
City Manager Pro Tem - Ex Officio City Recorder

CITY OF SWEET HOME
CITY COUNCIL
MINUTES

July 26, 2022, 6:30 PM
Sweet Home City Hall, 3225 Main Street
Sweet Home, OR 97386

WIFI Passcode: guestwifi
PLEASE silence all cell phones – Anyone who wishes to speak, please sign in.

Mission Statement

The City of Sweet Home will work to build an economically strong community with an efficient and effective local government that will provide infrastructure and essential services to the citizens we serve. As efficient stewards of the valuable assets available, we will be responsive to the community while planning and preparing for the future.

Meeting Information:
The City of Sweet Home is streaming the meeting via the Microsoft Teams platform and asks the public to consider this option. There will be opportunity for public input via the live stream. To view the meeting live, online visit http://live.sweethomeor.gov. If you don't have access to the internet you can call in to 971-203-2871 and enter the Meeting ID: 226 531 892#

This video stream and call in options are allowed under Council Rules, meet the requirements for Oregon Public Meeting Law, and have been approved by the Mayor and Chairperson of the meeting.

Call to Order and Pledge of Allegiance

The meeting was called to order at 6:30 PM.

Roll Call

PRESENT
Mayor Greg Mahler
President Pro Tem Diane Gerson
Councilor Dave Trask
Councilor Lisa Gourley
Councilor Susan Coleman
Councilor Angelita Sanchez
Councilor Dylan Richards

STAFF
Police Chief Jeff Lynn
City Manager Pro Tem Christy Wurster
Finance Director Brandon Neish
Community and Economic Development Director Blair Larsen (online)
Public Works Director Greg Springman
Library Services Director Megan Dazey
Administrative Services Manager Julie Fisher
City Attorney Robert Snyder

MEDIA
Benny Westcott, The New Era

The location of the meeting is accessible to the disabled. If you have a disability that requires accommodation, advanced notice is requested by notifying the City Manager's Office at 541-367-8969.

Consent Agenda:

Motion to approve the Consent Agenda made by Councilor Richards.
Voting Yea: Mayor Mahler, Councilor Trask, Councilor Coleman, Councilor Sanchez, Councilor Richards
Voting Abstaining: President Pro Tem Gerson, Councilor Gourley

Approval of Minutes:

a) 2022-07-12 City Council Minutes

b) 2022-06-28 City Council Minutes

c) 2022-07-19 City Council Meeting - ES

Recognition of Visitors and Hearing of Petitions:

Vince Adams, spoke to the Council regarding his concern on speeding on Mountain View Road. Chief Jeff Lynn responded that he agrees the area has been an issue and the police department will focus additional efforts on Mountain View Road.

Old Business:

a) Request for Council Action – 2023 Legislative Priorities for the League of Oregon Cities (LOC)

Chief Jeff Lynn presented the request for the Legislative Priorities. The top priorities were identified, and staff will submit the Legislative Priorities to the League of Oregon Cities.

The priorities were Economic Development - Downtown, Property Tax Reform, Resilient, Futureproof Broadband Infrastructure and Planning Investments, Address Measure 110 Shortcomings, and Infrastructure Financing and Resilience.

Motion to remove homelessness and add Economic Development for Downtown Revitalization made by Councilor Gourley, Seconded by Councilor Coleman.
Voting Yea: Mayor Mahler, President Pro Tem Gerson, Councilor Trask, Councilor Gourley, Councilor Coleman, Councilor Sanchez, Councilor Richards

b) Ordinance Bill No. 4 for 2022 - Ordinance No. 1304 - Sweet Home Ordinance Declaring a Ban on Psilocybin Service Centers and the Manufacture of Psilocybin Products

Community and Economic Development Director Blair Larsen presented the draft Ballot Title that would prohibit the sales of Psilocybin and related products within City limits.

Motion made to approve Resolution No. 29 for 2022 and moving Ordinance Bill No. 4 to first reading by President Pro Tem Gerson, Seconded by Councilor Richards.
Voting Yea: Mayor Mahler, President Pro Tem Gerson, Councilor Trask, Councilor Coleman, Councilor Sanchez, Councilor Richards
Voting Nay: Councilor Gourley

c) Information Only - FAC Facility Update

Public Works Director gave an update on the FAC Facility for the unhoused. Restrooms have been placed on the site and fencing will be up in a few weeks. The facility is moving forward.

d) Information Only - 9th Avenue Waterline Replacement Project Update

Public Works Director Greg Springman presented the 9th Avenue Waterline Replacement Project and gave an update on how the Buy America Program could affect the project. Staff has reached out to League of Oregon Cities and other cities to determine steps moving forward.

New Business:

a) Request for Council Action - Engineer of Record Water Master Plan Task Order Amendment

Engineer Technician Trish Rice presented a Task Order amendment for the Engineer of Record Water Master Plan. The change in the model will more accurately adjust population numbers for future growth and allow for correct sizing of pipe throughout the city.

Councilor Sanchez asked if staff negotiated with West Yost to see if the change order could be done without additional cost. Staff had not.

Motion made to approve the Task Order amendment by Councilor Trask, Seconded by Councilor Richards.
Voting Yea: Mayor Mahler, President Pro Tem Gerson, Councilor Trask, Councilor Gourley, Councilor Coleman
Voting Nay: Councilor Sanchez, Councilor Richards

b) Safe Routes to School Grant Application

Community and Economic Development Director Blair Larsen presented the request to submit the Safe Routes to School Grant Application. The Council thanked Donna Short who volunteered her time to write the grant application.

Motion to authorize the City Manager Pro Tem to sign and submit the application for the Safe Routes to School Grant made by Councilor Coleman, Seconded by Councilor Richards.
Voting Yea: Mayor Mahler, President Pro Tem Gerson, Councilor Trask, Councilor Gourley, Councilor Coleman, Councilor Sanchez, Councilor Richards

c) Request for Council Action – Government Portfolio Advisors Contract Extension

Finance Director Brandon Neish presented the request to extend the contract for Government Portfolio Advisors for an additional year.

Motion to approve the contract extension for Government Portfolio Advisors for one year made by Councilor Coleman, Seconded by Councilor Richards.
Voting Yea: Mayor Mahler, President Pro Tem Gerson, Councilor Trask, Councilor Gourley, Councilor Coleman, Councilor Sanchez, Councilor Richards

Ordinance Bills

Request for Council Action and First Reading of Ordinance Bills

a) Ordinance Bill No 4 for 2022 - Ordinance No. - Sweet Home Ordinance Declaring a Ban on Psilocybin Service Centers and the Manufacture of Psilocybin Products

Motion to move Ordinance Bill No. 1 for 2022 to first reading made by Councilor Trask, Seconded by Councilor Richards.
Voting Yea: Mayor Mahler, President Pro Tem Gerson, Councilor Trask, Councilor Gourley, Councilor Coleman, Councilor Sanchez, Councilor Richards

Ordinance Bill No. 4 for 2022 was read in its entirety.

Motion to move ordinance Bill No 4 for second reading immediately made by Councilor Trask, Seconded by Councilor Richards.
Voting Yea: Mayor Mahler, President Pro Tem Gerson, Councilor Trask, Councilor Gourley,

Councilor Coleman, Councilor Sanchez, Councilor Richards

Second Reading of Ordinance Bills

a) Ordinance Bill No. 4 for 2022 - Ordinance No. - Sweet Home Ordinance Declaring a Ban on Psilocybin Service Centers and the Manufacture of Psilocybin Products

Ordinance Bill No. 4 for 2022 was read by title only.

Motion to move Ordinance Bill No. 4 for 2022 to the third and final reading made by Councilor Trask, Seconded by Councilor Richards.
Voting Yea: Mayor Mahler, President Pro Tem Gerson, Councilor Trask, Councilor Gourley, Councilor Coleman, Councilor Sanchez, Councilor Richards

Third Reading of Ordinance Bills (Roll Call Vote Required)

Reports of Committees:

Ad Hoc Committee on Health

Councilor Lisa Gourley reported the Sweet Home Community Health Fair will be held at the High School on August 20th. Councilor Gourley requested the Sweet Home YAC to help at the event.

Chamber of Commerce

Councilor Diane Gerson reported Chamber Director Melody Reese has resigned. The Chamber is working to fill the vacancy with staff and volunteers until a new director can be hired.

Wendi Melcher has joined the Chamber Board of Directors.

Reports of City Officials:

Mayor's Report

Mayor Mahler thanked Finance Director Brandon Neish for his service to our community. Finance Director Neish stated he will miss working with everyone at the City.

There will be a Farewell event for Director Neish at City Hall on Wednesday, July 27th from 2pm until 4pm.

City Manager's Report

Christy Wurster, City Manager Pro Tem thanked Chief Lynn for filling in during her absence.

The City Candidate Handbook was presented to Council. The handbook was created by Administrative Services Manager Julie Fisher and Communications Specialist Lagea Mull with review by City Attorney Robert Snyder.

CM Pro Tem Wurster thanked Community and Economic Development Director Blair Larsen, Police Chief Jeff Lynn, and City Attorney Robert Snyder for their efforts to bring the Ballot Measure documents for consideration by voters.

Finance Director Brandon Neish has served the City for 4.5 years. It was noted that he will be missed and best of luck with his new position as Finance Director for the City of Lebanon.

Chief Lynn, acting as Interim City Manager, reported the Museum of Oregon Dinosaurs will host a display August 3rd - September 6th at the Sweet Home Library. Mia Jackson will present on 3pm August 3rd.

Chief Lynn reported the Oregon Jamboree in full set up mode. Additional construction and detouring will occur as the week progresses.

Chief Lynn thanked Finance Director Brandon Neish for his input for the last 4.5 years noting the many smiles and friendship. He will be missed.

a) City Council Candidate Handbook

The City Council Candidate Handbook was presented for Council Information.

Department Director's Reports (2nd meeting of the Month)

Finance Director

a) Finance Department Monthly Report

A written report was included in the packet.

Police Chief

a) Police Department Monthly Report

A written report was included in the packet.

City Attorney

No Report.

Council Business for Good of the Order

Items discussed during the Good of the Order for Council Business, included:

Councilor Gerson reported her subdivision will host a National Night Out event on August 2nd. Councilor Gerson also reported a reception for the City Hall Art Show will be from 5pm until 7pm on August 5th.

Councilor Gerson inquired with the FY21 Audit will be complete. Finance Director Neish reported that this work will be accomplished by the incoming Finance Director and City Manager.

Library Services Director Dazey announced the dinosaur display coming to the library will not cost the Library any funds.

The Police Department and Chief Lynn were thanked for their part in the Oregon Jamboree Music Festival that is happening this weekend.

Councilor Susan Coleman thanked Finance Director Brandon Neish and highlighted some of the successful projects Brandon was able to complete in his time with the City. Finance Director Neish was instrumental in saving over $700,000 in loan interest and had many other successes.

The Council thanked YAC Representative Tea Herrera for joining them for the meeting.

a) Comcast Update - July 2022

An update from Comcast regarding channel changes was included in the packet.

Adjournment

The meeting adjourned at 7:42 PM.

_____
Mayor

ATTEST:

_____
City Manager – Ex Officio City Recorder

REQUEST FOR COUNCIL ACTION

Title:	Request for Council Action - Mahler WRF Improvements Project Ph1 Bid Posting
Preferred Agenda:	August 9, 2022
Submitted By:	Trish Rice, Engineering Tech 2
Reviewed By:	Christy Wurster, City Manager Pro Tem Greg Springman, Public Works Director
Type of Action:	Resolution ____ Motion _X_ Roll Call ___ Other ___
Relevant Code/Policy:	N/A
Towards Council Goal:	1.1 Develop specific steps for implementation of the adopted infrastructure master plans.
Attachments:	Bid documents volumes 1-3 and supplementary information Project design schedule

Purpose of this RCA:

Staff is requesting Council authorization to solicit bids for the Mahler Water Reclamation Facility Improvements Project, Phase 1.

Background/Context:

The City has been in design for wastewater treatment plant capacity and process improvements to meet DEQ requirements since 2018 and includes improvements to every step of the treatment process. The project has been split into three phases to meet the June 30, 2023 deadline for the $7M allocation from the State of Oregon and to align permitting of the upsized outfall pipe (Ph3) with DEQ's schedule for our NPDES permit renewal. The Phase 1 construction contract includes demolition of abandoned buildings on the upper site, construction of a new influent pump station and main electrical & blower building, underground piping on the upper site which will be connected to Phase 2 process installations, and construction of the access road & retaining wall through the site. The engineer's estimate for the construction contract is $6.4M and a recommended 10% contingency reserve for change orders. Phase 1 also includes (separately from the construction contract) purchasing owner-supplied electrical equipment including the backup generator, switchgear, MCCs, and associated components and the control system software, at an estimated cost of $2.4M. The electrical equipment will be installed during Phase 2 but needs to be pre-ordered now due to lead times currently running at 60+ weeks. A detailed description of the pre-ordering plan is being prepared and will be brought to Council in September.

West Yost has delivered stamped documents ready to bid Phase 1 improvements. If approved, the bid posting will be advertised immediately upon completion of the contractor pre-qualification process, no later than August 18. Bids will close September 14. Contract award

is anticipated to come before Council for approval in October and then groundbreaking in November.

The Challenge/Problem:

To make efficient use of limited funds to complete needed wastewater treatment improvements and satisfy DEQ requirements and state funding timelines.

Stakeholders:

- *City Residents*. Residents are the customers who deserve good service with the highest return on their taxes and fees that we can provide, and who trust the City to maintain their infrastructure systems at a high level of service.
- *Council Members*. Council members are the voice of the citizens we serve. Each member of this group is interested in providing the best service possible at the lowest possible cost. They must balance leadership with representation.
- *Public Works Department Staff.* This project will greatly improve the operability of the WWTP which is currently undersized and beyond its serviceable lifespan. Staff spends significant time fixing broken down equipment and fighting with system inefficiencies.
- *Management Team*. Comprised of five department heads, each with a responsibility to the citizens and City Manager to run their day-to-day operations as efficiently as possible.
- *Oregon DEQ*. The WWTP upgrade project is required to comply with DEQ regulations.

Issues and Financial Impacts:

The engineer's estimate for the bids is $6.4M. The estimate for pre-ordering the electrical equipment is $2.4M. This will enable the City to meet the June 30, 2023 deadline for the $7M allocation from the State of Oregon.

Elements of a Stable Solution:

A stable solution will provide efficient completion of needed facility improvements and make full use of the funding from the State of Oregon for this project.

Options:

1. *Option 1 – Do Nothing.* This will result in project delays and regulatory action by DEQ.
2. *Option 2 – Move to post the solicitation as presented.* Staff will post the solicitation. The results will be brought to Council to approve awarding the construction contract.
3. *Option 3 – Move to post the solicitation with minor revisions.* Staff will make minor changes to the plans or contract as directed by Council, then post the solicitation.
4. *Option 4 – Make major revisions to the solicitation.* Staff will make major changes to the plans or contract as directed by Council, then bring the bid package back to Council for approval prior to posting the solicitation. This will delay the project by at least few weeks.

Recommendation:

Staff recommends *Option 2 – Move to post the solicitation as presented.*

DocuSign Envelope ID: D92FB7CA-DD9A-40FF-B59F-20FB66385E4F

CITY OF SWEET HOME

CONTRACT DOCUMENTS

FOR

MAHLER WATER RECLAMATION FACILITY IMPROVEMENTS PROJECT PHASE 1

VOLUME 1 OF 3

BIDDING AND CONTRACTUAL REQUIREMENT AND GENERAL REQUIREMENTS DIVISION 00 AND 01

BID DOCUMENTS

Department of Public Works, Engineering Division
1400 24th Avenue
Phone 541.367.6359

AUGUST 2022

DocuSign Envelope ID: D92FB7CA-DD9A-40FF-B59F-20FB66385E4F

(THIS PAGE LEFT BLANK INTENTIONALLY)

DocuSign Envelope ID: D92FB7CA-DD9A-40FF-B59F-20FB66385E4F

MAHLER WATER RECLAMATION FACILITY IMPROVEMENTS PROJECT PHASE 1

DESIGN CERTIFICATION

The Specifications contained herein have been prepared by, or under the responsible charge of, the following registered person(s):

Division 00, 01, 02, 31, 32, 33, 40, 43, 46, and 09 96 00
West Yost Associates
5 Centerpoint Dr, Suite #130
Lake Oswego, OR 97035
Preston Van Meter
License # 51615PE

REGISTERED PROFESSIONAL ENGINEER
DocuSigned by:
51615PE
4B04F76859FC46F...
8/2/2022
OREGON
JAN. 02, 1999
PRESTON VAN METER
EXPIRES : 6/30/2024

Division 26 and 27
Landis Consulting
5335 SW Meadows Rd, Suite 388
Lake Oswego, Oregon 97035
Benjamin E. Perry
License # 86683PE

REGISTERED PROFESSIONAL ENGINEER
DocuSigned by:
86683PE
851CD08B3554479...
8/2/2022
OREGON
MAY 08, 2012
BENJAMIN E. PERRY
EXPIRES: → 12-31-2022

Division 03 and 05
ACE Engineering
PO Box 231
Ashland, Oregon 97520
Allan T. Goffe, PE, SE
License # 64239PE

STRUCTURAL REGISTERED PROFESSIONAL ENGINEER
DocuSigned by:
64239PE
F7C16249CFC74DA...
8/2/2022
OREGON
JANUARY 14, 2003
ALLAN T GOFFE
EXPIRES 6/30/2023

Division 23
Interface Engineering
100SW Main Street, Suite 1600
Portland, OR 97204
Steven E. Dacus
License # 50530PE

DocuSigned by:
Steven E Dacus
217784F5099A430...
8/2/2022

EXPIRES: 12/31/23

Division 06, 07, 08, 09, 10
Strongwork Architecture, LLC
3309 SE Sherrett Street, Unit A
Portland, OR 97222
Alan P. Armstrong
License # ARI-5648

DocuSigned by:
Alan Armstrong
CFD0324945FE417...
8/2/2022

Expires 12/31/22

DocuSign Envelope ID: D92FB7CA-DD9A-40FF-B59F-20FB66385E4F

CITY OF SWEET HOME
MAHLER WRF IMPROVEMENTS PROJECT
PHASE 1

SECTION 00 01 10 – TABLE OF CONTENTSFOR

VOLUME 1 of 3

Division 00 – Procurement and Contracting Requirements

00 11 00	Advertisement for Bids
00 20 00	Instruction Pre-Qualified Bidders
00 40 00	Bid Form
00 43 00	Bid Bond
00 43 33	Proposed Products List
00 43 37	First-Tier Subcontractor Disclosure Form
00 45 19	Non-Collusion Affidavit
00 51 00	Notice of Award
00 52 00	Agreement between Owner and Contractor for Construction Contract
00 55 00	Notice to Proceed
00 61 10	Performance Bond
00 61 12	Warranty Bond
00 61 15	Payment Bond
00 70 00	Standard General Conditions of the Construction Contract
00 73 43	Oregon Prevailing Wage Rates

Division 01 - General Requirements

01 10 00	Summary of Work
01 12 16	Work Sequence and Constraints
01 29 02	Measurement and Payment
01 31 15	Partnering
01 31 19	Project Meetings
01 31 26	Electronic Construction Document Control System
01 32 16	CPM Construction Schedule
01 33 00	Submittals
01 34 00	Requests for Information and Clarifications
01 45 00	Contractor Quality Control
01 45 23	Testing and Inspections
01 45 26	Special Tests and Structural Observations
01 52 00	Construction Facilities and Utilities
01 57 19	Environmental Controls
01 57 29	Sewer Bypass Pumping
01 61 10	Seismic Design Requirements
01 61 11	Seismic Anchorage and Bracing
01 61 50	Wind Design Criteria
01 66 00	Materials and Equipment
01 66 05	American Iron and Steel Program Compliance
01 71 13	Mobilization and Demobilization
01 72 50	Protection of Existing Facilities

DocuSign Envelope ID: D92FB7CA-DD9A-40FF-B59F-20FB66385E4F

01 73 50 Cutting and Patching
01 77 00 Contract Closeout Procedures
01 78 23 Operation and Maintenance Data
01 78 36 Warranties and Bond
01 78 39 Project Record Drawings
01 78 43 Spare Parts
01 79 00 Training
01 81 00 Equipment Startup and Testing
01 82 50 Facility Startup and Commissioning
01 99 00 Reference Forms

VOLUME 2 of 3

Division 02 - Existing Conditions

02 41 00 Demolition, Salvage and Abandonment

Division 03 - Concrete

03 11 00 Concrete Formwork
03 15 00 Concrete Accessories
03 20 00 Concrete Reinforcement
03 30 00 Cast-In-Place Concrete
03 39 00 Concrete Curing
03 60 00 Grout

Division 05 – Metals

05 50 01 Anchor Bolts and Anchoring Devices
05 55 05 Miscellaneous Metalwork

Division 06 - Wood and Plastics

06 10 00 Rough Carpentry

Division 07 - Thermal and Moisture Protections

07 21 00 Thermal Insulation
07 25 00 Weather Barriers
07 30 12 Roofing Underlayment, Extended High-Temperature
07 41 13 Metal Roof Panels
07 42 13 Metal Wall Panels
07 62 00 Sheet Metal Flashing and Trim
07 92 00 Joint Sealants

Division 08 - Doors and Windows (Openings)

08 11 13 Hollow Metal Doors and Frames
08 33 23 Overhead Coiling Doors
08 71 00 Door Hardware
08 80 00 Glazing

DocuSign Envelope ID: D92FB7CA-DD9A-40FF-B59F-20FB66385E4F

Division 09 – Finish

09 21 16	Gypsum Board Assemblies
09 91 13	Exterior Painting
09 91 23	Interior Painting
09 96 00	High Performance Coatings

Division 10 - Specialties

10 14 00	Signage
10 14 13	Piping and Valve Identification Systems
10 44 00	Fire Protection Specialties

Division 23 – Heating, Ventilating, and Air Conditioning (HVAC)

23 00 00	Heating, Ventilating and Air Conditioning (HVAC) Basic Requirements
23 05 13	Common Motor Requirements for HVAC Equipment
23 05 29	Hangers and Supports for HVAC Piping, Ductwork, and Equipment
23 05 48	Vibration and Seismic Controls for HVAC Equipment
23 05 53	Identification for HVAC Piping, Ductwork, and Equipment
23 05 93	Testing, Adjusting, and Balancing for HVAC
23 07 00	HVAC Insulation
23 09 33	Electric and Electronic Control System for HVAC
23 21 13	HVAC Piping
23 31 00	HVAC Ducts and Casings
23 33 00	Air Duct Accessories
23 34 00	HVAC Fans
23 37 00	Air Outlets and Inlets
23 40 00	HVAC Air Cleaning Devices
23 81 26	Small Split System and Unitary HVAC Equipment
23 82 00	Terminal Heat Transfer Equipment

Division 26 – Electrical

26 01 00	Operation and Maintenance of Electrical Systems
26 01 06	Starting and Adjusting
26 01 08	Electrical Testing
26 01 15	Demonstration and Training
26 05 00	Common Work Results for Electrical
26 05 05	Selective Demolition for Electrical
26 05 08	Hazardous Classified Area Construction
26 05 19	Low-Voltage Electrical Power Conductors and Cables
26 05 26	Grounding and Bonding for Electrical Systems
26 05 28	Seismic Restraints for Electrical Systems
26 05 29	Hangers and Supports for Electrical Systems
26 05 33	Raceways and Boxes for Electrical Systems
26 05 53	Identification for Electrical Systems
26 05 73	Overcurrent Protective Device Coordination Study
26 05 83	Wiring Connections
26 08 00	Commissioning of Electrical Systems
26 21 00	Low-Voltage Electrical Service Entrance

DocuSign Envelope ID: D92FB7CA-DD9A-40FF-B59F-20FB66385E4F

26 22 00 Low-Voltage Transformers
26 24 13 Switchboards
26 24 16 Panelboards
26 24 19 Motor Control Centers
26 27 26 Wiring Devices
26 28 16 Enclosed Switches and Circuit Breakers
26 32 00 Packaged Diesel Generator Assemblies
26 51 00 Interior Lighting
26 56 00 Exterior Lighting

Division 27 - Communications

27 32 00 Telephone and Data Equipment

Division 31 - Earthwork

31 00 00 Earthwork
31 10 00 Site Preparation
31 23 16.13 Trenching
31 23 16.26 Rock Excavation
31 23 19 Dewatering
31 23 23.33 Controlled Low Strength Material
31 50 00 Excavation Support and Protection

Division 32 - Exterior Improvements

32 01 16 Pavement Restoration
32 01 17 Cold Plane Pavement Removal
32 01 20 Reconditioning Existing Roadway
32 11 23 Aggregate Base Course Material
32 12 16 Asphalt Concrete Pavement
32 31 13 Chain Link Fencing and Gates

Division 33 – Utilities

33 13 00 Disinfecting Water Pipelines
33 39 13 Precast Concrete Manholes

Division 40 - Process Integration

40 05 07 Pipe Hangers and Supports
40 05 10 Piping Systems
40 05 51 General Requirements for Valves
40 05 57.13 Manual Valve and Gate Operators and Operator Appurtenances
40 05 57.23 Powered Valve Operators and Operator Appurtenances
40 05 60 Valves and Appurtenances
40 05 65 Fabricated Stainless Steel Gates
40 05 96 Seismic Restraints for Piping
40 61 93 Process Control System Input/Output List
40 61 96.13 Process Control Descriptions – Influent Pump Station Pumps
40 61 96.14 Process Control Description - Influent Pump Station Gate
40 63 00 Control System Equipment

DocuSign Envelope ID: D92FB7CA-DD9A-40FF-B59F-20FB66385E4F

40 70 00 Instrumentation for Process Systems
40 71 00 Flow Measurement
40 72 00 Level Measurement
40 78 00 Panel Mounted Equipment
40 78 15 Pump Disconnect Panels
40 80 00 Commissioning of Process Systems
40 80 01 Testing Gravity Flow Pipelines
40 80 02 Testing Pressure Piping

Division 43 – Process Gas and Liquid Handling, Purification, and Storage

43 25 02 Submersible Wastewater Pump Solids Handling

Division 46 – Process Gas and Liquid Handling, Purification, and Storage

46 05 13 General Requirements for Equipment
46 05 14 Equipment Mounting

VOLUME 3 of 3

Volume 3 Drawings

SUPPLEMENTARY INFORMATION (Under Separate Cover)

McMillen Jacobs Associates*, Geotechnical Data Report – City of Sweet Home, Mahler Water Reclamation Facility Improvements*, Final June 2022

END OF SECTION

DocuSign Envelope ID: D92FB7CA-DD9A-40FF-B59F-20FB66385E4F

(THIS PAGE LEFT BLANK INTENTIONALLY)

DocuSign Envelope ID: D92FB7CA-DD9A-40FF-B59F-20FB66385E4F

ADVERTISEMENT FOR BIDS

CITY OF SWEET HOME, OREGON
MAHLER WATER RECLAMATION FACILITY IMPROVEMENTS, PHASE 1

General Notice

City of Sweet Home (Owner) is requesting Bids for the construction of the following Project:

MAHLER WATER RECLAMATION FACILITY IMPROVEMENTS, PHASE 1

Bids for the construction of the Project will be received at Sweet Home City Hall located at 3225 Main Street, Sweet Home, OR 97386, until **September 14, 2022** at **2:00 pm** local time. At that time the Bids received will be publicly opened and read.

The Project includes the following Work:

Improvements and modifications to the City of Sweet Home Mahler Water Reclamation Facility (Mahler WRF) includes furnishing all labor, materials, and equipment necessary for the construction of new influent pump station (IPS), new IPS piping and appurtenances, new Main Electrical and Blower (MEB) Building, new standby engine generator with automatic transfer switch, new electrical service entrance, installation of owner-supplied electrical Motor Control Centers (MCCs) and plant control panels. Site work includes demolition of existing trees, structures and roadways, general excavation with onsite and offsite disposal, installation of upper plant area aggregate base rock. Site piping will include connection and re-routing existing influent sanitary sewers to the new IPS, force mains and gravity pipelines that will be completed during Phase 2 construction.

Owner anticipates that the Project's total bid price will be approximately $7 Million. The Project has an expected duration of 365 calendar days.

Bidder Pre-Qualification Is Required

Prospective Bidders shall be pre-qualified through with the City through a separately-advertised public process. Bids from non-Pre-Qualified Bidders will be returned unopened. Pre-Qualified Bidders interested in submitting a Bid shall register and provide contact information for inclusion on the City's Plan Holders List. Official notifications, addenda and other information will be sent to Prospective Bidders using the City's Plan Holders List. It is the Bidders responsibility to confirm they are included on the City's Plan Holders List.

Obtaining the Bidding Documents for Pre-Qualified Bidders

For Pre-Qualified Bidders, the Contract Documents may be examined at Sweet Home City Hall. Electronic copies of the Contract Documents will be provided by the Owner. Hard copies of the Contract Documents will be provided to the successful Bidder following Bid Award.

Mandatory Pre-bid Conference

A mandatory pre-bid conference for the interested and Pre-Qualified Bidders will be held on **Thursday, August 25, 2022** at **10:00am** local time at the WWTP located at 1357 Pleasant Valley Road, Sweet Home, OR 97386**.** Bids will not be accepted from Pre-Qualified Bidders that do not attend the mandatory pre-bid conference.

Copyright© 2018 National Society of Professional Engineers, American Council of Engineering Companies, and American Society of Civil Engineers. All rights reserved.

DocuSign Envelope ID: D92FB7CA-DD9A-40FF-B59F-20FB66385E4F

Instructions to Bidders

For all further requirements regarding bid submittal, qualifications, procedures, and contract award, refer to the Instructions to Bidders included in the Bidding Documents.

American Iron and Steel

Section 746 of Title VII of the Consolidated Appropriations Act of 2017 (Division A - Agriculture, Rural Development, Food and Drug Administration, and Related Agencies Appropriations Act, 2017) and subsequent statutes mandating domestic preference applies an American Iron and Steel requirement to this project. All iron and steel products used in this project must be produced in the United States. The term "iron and steel products" means the following products made primarily of iron or steel: lined or unlined pipes and fittings, manhole covers and other municipal castings, hydrants, tanks, flanges, pipe clamps and restraints, valves, structural steel, reinforced precast concrete, and Construction Materials.

The following waivers apply to this Contract:

1. De Minimis,
2. Minor Components, and
3. Pig iron and direct reduced iron.

This Advertisement is issued by:

Owner: **City of Sweet Home, Oregon**
By: **Greg Springman**
Title: **Public Works Director**
Date: **August 18, 2022**

Copyright© 2018 National Society of Professional Engineers, American Council of Engineering Companies, and American Society of Civil Engineers. All rights reserved.

DocuSign Envelope ID: D92FB7CA-DD9A-40FF-B59F-20FB66385E4F

INSTRUCTIONS TO PRE-QUALIFIED BIDDERS FOR CONSTRUCTION CONTRACT

TABLE OF CONTENTS

Page

Article 1— Defined Terms 1

Article 2— Bidding Documents 1

Article 3— Qualifications of Pre-Qualified Bidders 3

Article 4— Mandatory Pre-Bid Conference 3

Article 5— Site and Other Areas; Existing Site Conditions; Examination of Site; Owner's Safety Program; Other Work at the Site 3

Article 6— Pre-Qualified Bidder's Representations and Certifications 5

Article 7— Interpretations and Addenda 6

Article 8— Bid Security 6

Article 9— Contract Times 7

Article 10— Substitute and "Or Equal" Items 7

Article 11— Subcontractors, Suppliers, and Others 7

Article 12— Preparation of Bid 8

Article 13— Basis of Bid 9

Article 14— Submittal of Bid 9

Article 15— Modification and Withdrawal of Bid 10

Article 16— Opening of Bids 10

Article 17— Bids to Remain Subject to Acceptance 10

Article 18— Evaluation of Bids and Award of Contract 10

Article 19— Bonds and Insurance 11

Article 20— Signing of Agreement 11

Article 21— Prevailing Wages 11

Article 22— Prevailing Wage Rate Forms 12

Article 23— Nondiscrimination 12

This document is a MODIFIED version of EJCDC® C-200, Instructions to Pre-Qualified Bidders for Construction Contract, Copyright© 2018 by the National Society of Professional Engineers, American Council of Engineering Companies, and American Society of Civil Engineers, or is based in part on excerpts from copyrighted EJCDC documents. All rights reserved. Those portions of the text that originated in copyrighted EJCDC documents remain subject to the copyright.

DocuSign Envelope ID: D92FB7CA-DD9A-40FF-B59F-20FB66385E4F

(THIS PAGE LEFT BLANK INTENTIONALLY)

This document is a MODIFIED version of EJCDC® C-200, Instructions to Pre-Qualified Bidders for Construction Contract, Copyright© 2018 by the National Society of Professional Engineers, American Council of Engineering Companies, and American Society of Civil Engineers, or is based in part on excerpts from copyrighted EJCDC documents. All rights reserved. Those portions of the text that originated in copyrighted EJCDC documents remain subject to the copyright.

DocuSign Envelope ID: D92FB7CA-DD9A-40FF-B59F-20FB66385E4F

ARTICLE 1—DEFINED TERMS

1.01 Terms used in these Instructions to Pre-Qualified Bidders have the meanings indicated in the General Conditions. Additional terms used in these Instructions to Pre-Qualified Bidders have the meanings indicated below:

A. *Issuing Office*—The office from which the Bidding Documents are to be issued, and which registers plan holders.

ARTICLE 2—BIDDING DOCUMENTS

2.01 Pre-Qualified Bidder shall obtain a complete set of Bidding Requirements and proposed Contract Documents (together, the Bidding Documents). See the Agreement for a list of the Contract Documents. It is Pre-Qualified Bidder's responsibility to determine that it is using a complete set of documents in the preparation of a Bid. Pre-Qualified Bidder assumes sole responsibility for errors or misinterpretations resulting from the use of incomplete documents, by Pre-Qualified Bidder itself or by its prospective Subcontractors and Suppliers.

2.02 Bidding Documents are made available for the sole purpose of obtaining Bids for completion of the Project and permission to download or distribution of the Bidding Documents does not confer a license or grant permission or authorization for any other use. Authorization to download documents, or other distribution, includes the right for plan holders to print documents solely for their use, and the use of their prospective Subcontractors and Suppliers, provided the plan holder pays all costs associated with printing or reproduction. Printed documents may not be re-sold under any circumstances.

2.03 Owner has established a Bidding Documents Website as indicated in the Advertisement or invitation to bid. Owner recommends that Pre-Qualified Bidder register as a plan holder with the Issuing Office at such website, and obtain a complete set of the Bidding Documents from such website. Pre-Qualified Bidders may rely that sets of Bidding Documents obtained from the Bidding Documents Website are complete, unless an omission is blatant. Registered plan holders will receive Addenda issued by Owner.

2.04 Pre-Qualified Bidder may register as a plan holder and obtain complete sets of Bidding Documents, in the number and format stated in the Advertisement or invitation to bid, from the Issuing Office. Pre-Qualified Bidders may rely that sets of Bidding Documents obtained from the Issuing Office are complete, unless an omission is blatant. Registered plan holders will receive Addenda issued by Owner.

2.05 Plan rooms (including construction information subscription services, and electronic and virtual plan rooms) may distribute the Bidding Documents, or make them available for examination. Those prospective Pre-Qualified Bidders that obtain an electronic (digital) copy of the Bidding Documents from a plan room are encouraged to register as plan holders from the Bidding Documents Website or Issuing Office. Owner is not responsible for omissions in Bidding Documents or other documents obtained from plan rooms, or for a Pre-Qualified Bidder's failure to obtain Addenda from a plan room.

This document is a MODIFIED version of EJCDC® C-200, Instructions to Pre-Qualified Bidders for Construction Contract, Copyright© 2018 by the National Society of Professional Engineers, American Council of Engineering Companies, and American Society of Civil Engineers, or is based in part on excerpts from copyrighted EJCDC documents. All rights reserved. Those portions of the text that originated in copyrighted EJCDC documents remain subject to the copyright.

2.06 *Electronic Documents*

A. When the Bidding Requirements indicate that electronic (digital) copies of the Bidding Documents are available, such documents will be made available to the Pre-Qualified Bidders as Electronic Documents in the manner specified.

1. Bidding Documents will be provided in Adobe PDF (Portable Document Format) (.pdf) that is readable by Adobe Acrobat Reader. It is the intent of the Engineer and Owner that such Electronic Documents are to be exactly representative of the paper copies of the documents. However, because the Owner and Engineer cannot totally control the transmission and receipt of Electronic Documents nor the Contractor's means of reproduction of such documents, the Owner and Engineer cannot and do not guarantee that Electronic Documents and reproductions prepared from those versions are identical in every manner to the paper copies.

B. Unless otherwise stated in the Bidding Documents, the Pre-Qualified Bidder may use and rely upon complete sets of Electronic Documents of the Bidding Documents, described in Paragraph 2.06.A above. However, Pre-Qualified Bidder assumes all risks associated with differences arising from transmission/receipt of Electronic Documents versions of Bidding Documents and reproductions prepared from those versions and, further, assumes all risks, costs, and responsibility associated with use of the Electronic Documents versions to derive information that is not explicitly contained in printed paper versions of the documents, and for Pre-Qualified Bidder's reliance upon such derived information.

C. After the Contract is awarded, the Owner will provide or direct the Engineer to provide for the use of the Contractor documents that were developed by Engineer as part of the Project design process, as Electronic Documents in native file formats.

1. Electronic Documents that are available in native file format include:

a. Electronic Drawing files in Revit, AutoCAD MEP and AutoCAD Civil3D.

b. Digital Elevation Model (DEM) for the construction site

2. Release of such documents will be solely for the convenience of the Contractor. No such document is a Contract Document.

3. Unless the Contract Documents explicitly identify that such information will be available to the Successful Pre-Qualified Bidder (Contractor), nothing herein will create an obligation on the part of the Owner or Engineer to provide or create such information, and the Contractor is not entitled to rely on the availability of such information in the preparation of its Bid or pricing of the Work. In all cases, the Contractor shall take appropriate measures to verify that any electronic/digital information provided in Electronic Documents is appropriate and adequate for the Contractor's specific purposes.

4. In no case will the Contractor be entitled to additional compensation or time for completion due to any differences between the actual Contract Documents and any related document in native file format.

This document is a MODIFIED version of EJCDC® C-200, Instructions to Pre-Qualified Bidders for Construction Contract, Copyright© 2018 by the National Society of Professional Engineers, American Council of Engineering Companies, and American Society of Civil Engineers, or is based in part on excerpts from copyrighted EJCDC documents. All rights reserved. Those portions of the text that originated in copyrighted EJCDC documents remain subject to the copyright.

ARTICLE 3—QUALIFICATIONS OF PRE-QUALIFIED BIDDERS

3.01 Pre-Qualified Bidder shall be pre-qualified through a separate publicly-advertised process. Bids from non-Pre-Qualified Bidders will be returned unopened.

ARTICLE 4— MANDATORY PRE-BID CONFERENCE

4.01 A Mandatory Pre-Bid Conference will be held at the time and location indicated in the Advertisement for Bids. Representatives of Owner and Engineer will be present to discuss the Project. Proposals will not be accepted from Pre-Qualified Bidders who do not attend the conference. It is each Pre-Qualified Bidder's responsibility to sign in at the pre-bid conference to verify its participation. Pre-Qualified Bidders must sign in using the name of the organization that will be submitting a Bid. A list of Pre-Qualified Bidders that attended the Mandatory Pre-Bid Conference and are eligible to submit a Bid for the Project will be issued in an Addendum.

4.02 Information presented at the Mandatory Pre-Bid Conference does not alter the Contract Documents. Owner will issue Addenda to make any changes to the Contract Documents that result from discussions at the Mandatory Pre-Bid Conference. Information presented, and statements made at the Mandatory Pre-Bid Conference will not be binding or legally effective unless incorporated in an Addendum.

ARTICLE 5—SITE AND OTHER AREAS; EXISTING SITE CONDITIONS; EXAMINATION OF SITE; OWNER'S SAFETY PROGRAM; OTHER WORK AT THE SITE

5.01 *Site and Other Areas*

A. The Site is identified in the Bidding Documents. By definition, the Site includes rights-of-way, easements, and other lands furnished by Owner for the use of the Contractor. Any additional lands required for temporary construction facilities, construction equipment, or storage of materials and equipment, and any access needed for such additional lands, are to be obtained and paid for by Contractor.

5.02 *Existing Site Conditions*

A. *Subsurface and Physical Conditions; Hazardous Environmental Conditions*

1. The General Conditions identify the following regarding existing conditions at or adjacent to the Site:

a. Those reports of explorations and tests of subsurface conditions at or adjacent to the Site that contain Technical Data.

b. Those drawings known to Owner of existing physical conditions at or adjacent to the Site, including those drawings depicting existing surface or subsurface structures at or adjacent to the Site (except Underground Facilities), that contain Technical Data.

c. Reports and drawings known to Owner relating to Hazardous Environmental Conditions that have been identified at or adjacent to the Site.

d. Technical Data contained in such reports and drawings.

2. Owner will make electronic copies of reports and drawings referenced above available to any Pre-Qualified Bidder on request. These reports and drawings are not part of the Contract Documents, but the Technical Data contained therein upon whose accuracy

This document is a MODIFIED version of EJCDC® C-200, Instructions to Pre-Qualified Bidders for Construction Contract, Copyright© 2018 by the National Society of Professional Engineers, American Council of Engineering Companies, and American Society of Civil Engineers, or is based in part on excerpts from copyrighted EJCDC documents. All rights reserved. Those portions of the text that originated in copyrighted EJCDC documents remain subject to the copyright.

Pre-Qualified Bidder is entitled to rely, as provided in the General Conditions. Pre-Qualified Bidder is responsible for any interpretation or conclusion Pre-Qualified Bidder draws from any Technical Data or any other data, interpretations, opinions, or information contained in such reports or shown or indicated in such drawings.

3. *Geotechnical Report:* The Bidding Documents contain a Geotechnical Data Report (GDR) for use by Pre-Qualified Bidders (Supplemental Information – bound separately).

   a. As set forth in the General Conditions, the GDR describes certain select subsurface conditions that are anticipated to be encountered by Contractor during construction in specified locations ("Baseline Conditions"). The GDR is a Contract Document.

   b. The Baseline Conditions in the GDR are intended to reduce uncertainty and the degree of contingency in submitted Bids. However, Pre-Qualified Bidders cannot rely solely on the Baseline Conditions. Bids should be based on a comprehensive approach that includes an independent review and analysis of the GDR, all other Contract Documents, Technical Data, other available information, and observable surface conditions. Not all potential subsurface conditions are baselined.

   c. Nothing in the GDR is intended to relieve Pre-Qualified Bidders of the responsibility to make their own determinations regarding construction costs, bidding strategies, and Bid prices, nor of the responsibility to select and be responsible for the means, methods, techniques, sequences, and procedures of construction, and for safety precautions and programs incident thereto.

B. *Underground Facilities:* Underground Facilities are shown or indicated on the Drawings, pursuant to Paragraph 5.05 of the General Conditions, and not in the drawings referred to in Paragraph 5.02.A of these Instructions to Pre-Qualified Bidders. Information and data regarding the presence or location of Underground Facilities are not intended to be categorized, identified, or defined as Technical Data.

5.03 *Other Site-related Documents*

A. Documents regarding existing Site conditions referred to in Paragraph 5.02.A are listed in the General Conditions 5.03(A). Owner will make copies of these other Site-related documents available to any Pre-Qualified Bidder on request.

B. Pre-Qualified Bidder shall consider information contained on these other site-related documents to be un-verified and shall not rely on the accuracy of any data or information in such documents. Pre-Qualified Bidder is responsible for any interpretation or conclusion Pre-Qualified Bidder draws from the other Site-related documents.

C. The other Site-related documents are not part of the Contract Documents.

D. Pre-Qualified Bidders are encouraged to review the other Site-related documents, but Pre-Qualified Bidders will not be held accountable for any data or information in such documents. The requirement to review and take responsibility for documentary Site information is limited to information in (1) the Contract Documents and (2) the Technical Data.

This document is a MODIFIED version of EJCDC® C-200, Instructions to Pre-Qualified Bidders for Construction Contract, Copyright© 2018 by the National Society of Professional Engineers, American Council of Engineering Companies, and American Society of Civil Engineers, or is based in part on excerpts from copyrighted EJCDC documents. All rights reserved. Those portions of the text that originated in copyrighted EJCDC documents remain subject to the copyright.

5.04 *Site Visit and Testing by Pre-Qualified Bidders*

A. Pre-Qualified Bidder is required to visit the Site and conduct a thorough visual examination of the Site and adjacent areas. During the visit the Pre-Qualified Bidder must not disturb any ongoing operations at the Site.

B. A Site visit is scheduled following the Mandatory Pre-Bid Conference.

C. Pre-Qualified Bidders visiting the Site are required to arrange their own transportation to the Site.

D. All access to the Site other than during a regularly scheduled Site visit must be coordinated through the following Owner or Engineer contact for visiting the Site: Mr. Steven Haney, Utilities Manager, (541) 818-8003.

E. Pre-Qualified Bidder is not required to conduct any subsurface testing, or exhaustive investigations of Site conditions.

F. On request and schedule permitting, the Owner will provide Pre-Qualified Bidder general access to the Site to conduct such additional examinations, investigations, explorations, tests, and studies as Pre-Qualified Bidder deems necessary for preparing and submitting a successful Bid. Owner will not have any obligation to grant such access if doing so is not practical because of existing operations, security or safety concerns, or restraints on Owner's authority regarding the Site. Pre-Qualified Bidder is responsible for establishing access needed to reach specific selected test sites.

G. Pre-Qualified Bidder must comply with all applicable Laws and Regulations regarding excavation and location of utilities, obtain all permits, and comply with all terms and conditions established by Owner or by property owners or other entities controlling the Site with respect to schedule, access, existing operations, security, liability insurance, and applicable safety programs.

H. Pre-Qualified Bidder must fill all holes and clean up and restore the Site to its former condition upon completion of such explorations, investigations, tests, and studies.

5.05 *Owner's Safety Program*

A. Site visits and work at the Site is governed Oregon OSHA requirements.

5.06 *Other Work at the Site*

A. Reference is made to Article 8 of the General Conditions for the identification of the general nature of other work of which Owner is aware (if any) that is to be performed at the Site by Owner or others (such as utilities and other prime contractors) and relates to the Work contemplated by these Bidding Documents. If Owner is party to a written contract for such other work, then on request, Owner will provide to each Pre-Qualified Bidder access to examine such contracts (other than portions thereof related to price and other confidential matters), if any.

ARTICLE 6—PRE-QUALIFIED BIDDER'S REPRESENTATIONS AND CERTIFICATIONS

6.01 *Express Representations and Certifications in Bid Form, Agreement*

A. The Bid Form that each Pre-Qualified Bidder will submit contains express representations regarding the Pre-Qualified Bidder's examination of Project documentation, Site visit, and

This document is a MODIFIED version of EJCDC® C-200, Instructions to Pre-Qualified Bidders for Construction Contract, Copyright© 2018 by the National Society of Professional Engineers, American Council of Engineering Companies, and American Society of Civil Engineers, or is based in part on excerpts from copyrighted EJCDC documents. All rights reserved. Those portions of the text that originated in copyrighted EJCDC documents remain subject to the copyright.

preparation of the Bid, and certifications regarding lack of collusion or fraud in connection with the Bid. Pre-Qualified Bidder should review these representations and certifications, and assure that Pre-Qualified Bidder can make the representations and certifications in good faith, before executing and submitting its Bid.

B. If Pre-Qualified Bidder is awarded the Contract, Pre-Qualified Bidder (as Contractor) will make similar express representations and certifications when it executes the Agreement.

ARTICLE 7—INTERPRETATIONS AND ADDENDA

7.01 Owner on its own initiative may issue Addenda to clarify, correct, supplement, or change the Bidding Documents.

7.02 Pre-Qualified Bidder shall submit all questions about the meaning or intent of the Bidding Documents to Owner and Engineer in writing.

7.03 Interpretations or clarifications considered necessary by Engineer in response to such questions will be issued by Addenda delivered to all pre-qualified and registered plan holders. Questions received less than seven days prior to the date for opening of Bids may not be answered.

7.04 Only responses set forth in an Addendum will be binding. Oral and other interpretations or clarifications will be without legal effect. Responses to questions are not part of the Contract Documents unless set forth in an Addendum that expressly modifies or supplements the Contract Documents.

ARTICLE 8—BID SECURITY

8.01 A Bid must be accompanied by Bid security made payable to Owner in an amount of 5% percent of Pre-Qualified Bidder's maximum Bid price (determined by adding the base bid and all alternates) and in the form of a Bid bond issued by a surety meeting the requirements of Paragraph 6.01 of the General Conditions. Such Bid bond will be issued in the form included in the Bidding Documents. Bid security must be at least 5% of the Pre-Qualified Bidder's maximum price.

8.02 The Bid security of the apparent Successful Pre-Qualified Bidder will be retained until Owner awards the contract to such Pre-Qualified Bidder, and such Pre-Qualified Bidder has executed the Contract, furnished the required Contract security, and met the other conditions of the Notice of Award, whereupon the Bid security will be released. If the Successful Pre-Qualified Bidder fails to execute and deliver the Contract and furnish the required Contract security within 15 days after the Notice of Award, Owner may consider Pre-Qualified Bidder to be in default, annul the Notice of Award, and the Bid security of that Pre-Qualified Bidder will be forfeited, in whole in the case of a penal sum bid bond, and to the extent of Owner's damages in the case of a damages-form bond. Such forfeiture will be Owner's exclusive remedy if Pre-Qualified Bidder defaults.

8.03 The Bid security of other Pre-Qualified Bidders that Owner believes to have a reasonable chance of receiving the award may be retained by Owner until the earlier of 7 days after the Effective Date of the Contract or 91 days after the Bid opening, whereupon Bid security furnished by such Pre-Qualified Bidders will be released.

8.04 Bid security of other Pre-Qualified Bidders that Owner believes do not have a reasonable chance of receiving the award will be released within 7 days after the Bid opening.

This document is a MODIFIED version of EJCDC® C-200, Instructions to Pre-Qualified Bidders for Construction Contract, Copyright© 2018 by the National Society of Professional Engineers, American Council of Engineering Companies, and American Society of Civil Engineers, or is based in part on excerpts from copyrighted EJCDC documents. All rights reserved. Those portions of the text that originated in copyrighted EJCDC documents remain subject to the copyright.

ARTICLE 9—CONTRACT TIMES

9.01 The number of days within which, or the dates by which, the Work is to be (a) substantially completed and (b) ready for final payment, and (c) Milestones (if any) are to be achieved, are set forth in the Agreement.

9.02 Provisions for liquidated damages, if any, for failure to timely attain a Milestone, Substantial Completion, or completion of the Work in readiness for final payment, are set forth in the Agreement.

ARTICLE 10—SUBSTITUTE AND "OR EQUAL" ITEMS

10.01 The Contract for the Work, as awarded, will be on the basis of materials and equipment specified or described in the Bidding Documents without consideration during the bidding and Contract award process of possible substitute or "or-equal" items. In cases in which the Contract allows the Contractor to request that Engineer authorize the use of a substitute or "or-equal" item of material or equipment, application for such acceptance may not be made to and will not be considered by Engineer until after the Effective Date of the Contract.

10.02 All prices that Pre-Qualified Bidder sets forth in its Bid will be based on the presumption that the Contractor will furnish the materials and equipment specified or described in the Bidding Documents, as supplemented by Addenda. Any assumptions regarding the possibility of post-Bid approvals of "or-equal" or substitution requests are made at Pre-Qualified Bidder's sole risk.

10.03 Substitutes and "or-equal" materials and equipment may be proposed by Contractor in accordance with Paragraphs 7.05 and 7.06 of the General Conditions after the Effective Date of the Contract. Each such request shall include Manufacturer's Certification letter to document compliance with AIS requirements of Section 746 of Title VII of the Consolidated Appropriations Act of 2017 (Division A - Agriculture, Rural Development, Food and Drug Administration, and Related Agencies Appropriations Act, 2017) and subsequent statutes mandating domestic preference, if applicable. Refer to Manufacturer's Certification Letter provided in these Contract Documents.

ARTICLE 11—SUBCONTRACTORS, SUPPLIERS, AND OTHERS

11.01 The apparent Successful Pre-Qualified Bidder, and any other Pre-Qualified Bidder so requested, must submit to Owner the First-Tier Subcontractor Disclosure within 2 hours following the Bid Opening.

11.02 The Electrical Subcontractor included in the First-Tier Subcontractor Disclosure shall be a Pre-Qualified Electrical Contractor for the Project. Information on Pre-Qualified Electrical Subcontractors will be made available to Pre-Qualified Bidders is included in the Information Available for Pre-Qualified Bidders.

11.03 If apparent Successful Pre-Qualified Bidder declines to utilize a Pre-Qualified Electrical Subcontractor, Owner may award the Contract to the next lowest Pre-Qualified Bidder that proposes to use a Pre-Qualified Electrical Subcontractor.

This document is a MODIFIED version of EJCDC® C-200, Instructions to Pre-Qualified Bidders for Construction Contract, Copyright© 2018 by the National Society of Professional Engineers, American Council of Engineering Companies, and American Society of Civil Engineers, or is based in part on excerpts from copyrighted EJCDC documents. All rights reserved. Those portions of the text that originated in copyrighted EJCDC documents remain subject to the copyright.

ARTICLE 12—PREPARATION OF BID

12.01 The Bid Form is included with the Bidding Documents.

A. All blanks on the Bid Form must be completed in ink and the Bid Form signed in ink. Erasures or alterations must be initialed in ink by the person signing the Bid Form. A Bid price must be indicated for each section, Bid item, alternate, adjustment unit price item, and unit price item listed therein.

B. If the Bid Form expressly indicates that submitting pricing on a specific alternate item is optional, and Pre-Qualified Bidder elects to not furnish pricing for such optional alternate item, then Pre-Qualified Bidder may enter the words "No Bid" or "Not Applicable."

C. Pre-Qualified Bidders shall provide pricing for all "A-listed" or first-named equipment suppliers in the Bid Form.

12.02 If Pre-Qualified Bidder has obtained the Bidding Documents as Electronic Documents, then Pre-Qualified Bidder shall prepare its Bid on a paper copy of the Bid Form printed from the Electronic Documents version of the Bidding Documents. The printed copy of the Bid Form must be clearly legible, printed on 8½ inch by 11-inch paper and as closely identical in appearance to the Electronic Document version of the Bid Form as may be practical. The Owner reserves the right to accept Bid Forms which nominally vary in appearance from the original paper version of the Bid Form, providing that all required information and submittals are included with the Bid.

12.03 A Bid by a corporation must be executed in the corporate name by a corporate officer (whose title must appear under the signature), accompanied by evidence of authority to sign. The corporate address and state of incorporation must be shown.

12.04 A Bid by a partnership must be executed in the partnership name and signed by a partner (whose title must appear under the signature), accompanied by evidence of authority to sign. The official address of the partnership must be shown.

12.05 A Bid by a limited liability company must be executed in the name of the firm by a member or other authorized person and accompanied by evidence of authority to sign. The state of formation of the firm and the official address of the firm must be shown.

12.06 A Bid by an individual must show the Pre-Qualified Bidder's name and official address.

12.07 A Bid by a joint venture must be executed by an authorized representative of each joint venturer in the manner indicated on the Bid Form. The joint venture must have been formally established prior to submittal of a Bid, and the official address of the joint venture must be shown.

12.08 All names must be printed in ink below the signatures.

12.09 The Bid must contain an acknowledgment of receipt of all Addenda, the numbers of which must be filled in on the Bid Form.

12.10 Postal and e-mail addresses and telephone number for communications regarding the Bid must be shown.

12.11 The Bid must contain evidence of Pre-Qualified Bidder's authority to do business in the state where the Project is located, or Pre-Qualified Bidder must certify in writing that it will obtain such authority within the time for acceptance of Bids and attach such certification to the Bid.

This document is a MODIFIED version of EJCDC® C-200, Instructions to Pre-Qualified Bidders for Construction Contract, Copyright© 2018 by the National Society of Professional Engineers, American Council of Engineering Companies, and American Society of Civil Engineers, or is based in part on excerpts from copyrighted EJCDC documents. All rights reserved. Those portions of the text that originated in copyrighted EJCDC documents remain subject to the copyright.

12.12 If Pre-Qualified Bidder is required to be licensed to submit a Bid or perform the Work in the state where the Project is located, the Bid must contain evidence of Pre-Qualified Bidder's licensure, or Pre-Qualified Bidder must certify in writing that it will obtain such licensure within the time for acceptance of Bids and attach such certification to the Bid. Pre-Qualified Bidder's state contractor license number, if any, must also be shown on the Bid Form.

ARTICLE 13—BASIS OF BID

13.01 *Lump Sum*

A. Pre-Qualified Bidders must submit a Bid on a lump sum basis for each bid item as set forth in the Bid Form.

13.02 *Additive and Deductive Unit Price Work Bid Items*

A. Pre-Qualified Bidders must submit unit prices for bid items with additional work beyond the quantities included in the Lump Sum Bid.

1. Additive and Deductive Unit Price Work Items shall include:

a. General Excavation – Unclassified with Offsite Disposal

b. Rock Excavation

c. Excavation Dewatering

d. Sewer Bypass Pumping

B. Costs for Additive and Deductive Unit Price Work Bid Items will be considered by the Owner in the evaluation of bids based on the potential impact of increased or decreased quantities for these Bid items in the course of executing the Work.

C. Bidders shall not unbalance bids for Additive and Deductive Unit Price Work Items.

13.03 *Allowances*

A. For cash allowances the Bid price must include such amounts as the Pre-Qualified Bidder deems proper for Contractor's overhead, costs, profit, and other expenses on account of cash allowances, if any, named in the Contract Documents, in accordance with Paragraph 13.02.B of the General Conditions.

ARTICLE 14—SUBMITTAL OF BID

14.01 The Bidding Documents include one separate unbound copy of the Bid Form, and, if required, the Bid Bond Form. The unbound copy of the Bid Form and the First-Tier Subcontractor Disclosure Form are to be completed and submitted with the Bid security and the other documents required to be submitted under the terms of Article 2 of the Bid Form.

14.02 A Bid must be received no later than the date and time prescribed and at the place indicated in the Advertisement or invitation to bid and must be enclosed in a plainly marked package with the Project title, the name and address of Pre-Qualified Bidder, the date of opening, the applicable words "SEALED BID" or "FIRST-TIER SUBCONTRACTOR DISCLOSURE FORM" and must be accompanied by the Bid security and other required documents. If a Bid is sent by mail or other delivery system, the sealed envelope containing the Bid must be enclosed in a separate package plainly marked on the outside with the notation "BID ENCLOSED" or "FIRST-TIER SUBCONTRACTOR

This document is a MODIFIED version of EJCDC® C-200, Instructions to Pre-Qualified Bidders for Construction Contract, Copyright© 2018 by the National Society of Professional Engineers, American Council of Engineering Companies, and American Society of Civil Engineers, or is based in part on excerpts from copyrighted EJCDC documents. All rights reserved. Those portions of the text that originated in copyrighted EJCDC documents remain subject to the copyright.

DISCLOSURE FORM." A mailed Bid must be addressed to the location designated in the Advertisement.

14.03 Bids received after the date and time prescribed for the opening of bids, or not submitted at the correct location or in the designated manner, will not be accepted and will be returned to the Pre-Qualified Bidder unopened.

ARTICLE 15—MODIFICATION AND WITHDRAWAL OF BID

15.01 An unopened Bid may be withdrawn by an appropriate document duly executed in the same manner that a Bid must be executed and delivered to the place where Bids are to be submitted prior to the date and time for the opening of Bids. Upon receipt of such notice, the unopened Bid will be returned to the Pre-Qualified Bidder.

15.02 If a Pre-Qualified Bidder wishes to modify its Bid prior to Bid opening, Pre-Qualified Bidder must withdraw its initial Bid in the manner specified in Paragraph 15.01 and submit a new Bid prior to the date and time for the opening of Bids.

15.03 If within 24 hours after Bids are opened any Pre-Qualified Bidder files a duly signed written notice with Owner and promptly thereafter demonstrates to the reasonable satisfaction of Owner that there was a material and substantial mistake in the preparation of its Bid, the Pre-Qualified Bidder may withdraw its Bid, and the Bid security will be returned. Thereafter, if the Work is rebid, the Pre-Qualified Bidder will be disqualified from further bidding on the Work.

ARTICLE 16—OPENING OF BIDS

16.01 Bids will be opened at the time and place indicated in the advertisement or invitation to bid and, unless obviously non-responsive, read aloud publicly. An abstract of the amounts of the base Bids and major alternates, if any, will be made available to Pre-Qualified Bidders after the opening of Bids.

ARTICLE 17—BIDS TO REMAIN SUBJECT TO ACCEPTANCE

17.01 All Bids will remain subject to acceptance for the period of time stated in the Bid Form, but Owner may, in its sole discretion, release any Bid and return the Bid security prior to the end of this period.

ARTICLE 18—EVALUATION OF BIDS AND AWARD OF CONTRACT

18.01 Owner reserves the right to reject any or all Bids, including without limitation, nonconforming, nonresponsive, unbalanced, or conditional Bids. Owner also reserves the right to waive all minor Bid informalities not involving price, time, or changes in the Work.

18.02 Owner will reject the Bid of any Pre-Qualified Bidder that Owner finds, after reasonable inquiry and evaluation, to not be responsible.

18.03 If Pre-Qualified Bidder purports to add terms or conditions to its Bid, takes exception to any provision of the Bidding Documents, or attempts to alter the contents of the Contract Documents for purposes of the Bid, whether in the Bid itself or in a separate communication to Owner or Engineer, then Owner will reject the Bid as nonresponsive.

18.04 If Owner awards the contract for the Work, such award will be to the responsible Pre-Qualified Bidder submitting the lowest responsive Bid.

This document is a MODIFIED version of EJCDC® C-200, Instructions to Pre-Qualified Bidders for Construction Contract, Copyright© 2018 by the National Society of Professional Engineers, American Council of Engineering Companies, and American Society of Civil Engineers, or is based in part on excerpts from copyrighted EJCDC documents. All rights reserved. Those portions of the text that originated in copyrighted EJCDC documents remain subject to the copyright.

18.05 *Evaluation of Bids*

A. In evaluating Bids, Owner will consider whether the Bids comply with the prescribed requirements, and such alternates, unit prices, and other data, as may be requested in the Bid Form or prior to the Notice of Award.

B. For determination of the apparent lowest responsive and responsible Pre-Qualified Bidder, Bids will be compared on the basis of the Lump Sum Price along with potential additional costs for Additive or Deductive Additional Work Bid Items determined at the Owner's discretion.

18.06 Owner will not consider qualifications in the evaluation of Bids from Pre-Qualified Bidders. Bids from Non-Pre-Qualified Bidders will be returned unopened.

ARTICLE 19—BONDS AND INSURANCE

19.01 Article 6 of the General Conditions sets forth Owner's requirements as to performance and payment bonds, other required bonds (if any), and insurance. When the Successful Pre-Qualified Bidder delivers the executed Agreement to Owner, it must be accompanied by required bonds and insurance documentation.

19.02 Article 8, Bid Security, of these Instructions, addresses any requirements for providing bid bonds as part of the bidding process.

ARTICLE 20—SIGNING OF AGREEMENT

20.01 When Owner issues a Notice of Award to the Successful Pre-Qualified Bidder, it will be accompanied by the unexecuted counterparts of the Agreement along with the other Contract Documents as identified in the Agreement. Within 15 days thereafter, Successful Pre-Qualified Bidder must execute and deliver the required number of counterparts of the Agreement and any bonds and insurance documentation required to be delivered by the Contract Documents to Owner. Within 10 days thereafter, Owner will deliver one fully executed counterpart of the Agreement to Successful Pre-Qualified Bidder, together with printed and electronic copies of the Contract Documents as stated in Paragraph 2.02 of the General Conditions.

ARTICLE 21— PREVAILING WAGES

21.01 The Contractor shall abide by ORS 279c.800 through 279c.870 which relate to the prevailing wage rates for the building and construction trades in the state of Oregon. These prevailing wage rates are shown in the published Oregon Bureau of Labor and Industries (BOLI) documentation, which is described in these Contract Documents. Federal Davis-Bacon act requirements also apply, as executed by the United States Department of Labor (DOL). The higher of the two wages shall be paid to all workers as applicable on this project. The Contractor shall be aware of the requirements described elsewhere in these Contract Documents. Both items are referenced and described in the Oregon DEQ form "Prevailing Wage Agreement" included in these Contract Documents, which is a form that is required to be completed by the Contractor and submitted at the time of bid placement.

21.02 Pre-Qualified Bidders are advised to examine and to be thoroughly familiar with such requirements. No claim for additional compensation will be allowed that is based upon a lack of

This document is a MODIFIED version of EJCDC® C-200, Instructions to Pre-Qualified Bidders for Construction Contract, Copyright© 2018 by the National Society of Professional Engineers, American Council of Engineering Companies, and American Society of Civil Engineers, or is based in part on excerpts from copyrighted EJCDC documents. All rights reserved. Those portions of the text that originated in copyrighted EJCDC documents remain subject to the copyright.

knowledge of these requirements or a failure to include adequate increases in such wages over the term of this Contract in the Pre-Qualified Bidder's bid price.

ARTICLE 22— PREVAILING WAGE RATE FORMS

22.01 Before payment is made by the Owner of any sums due under this Contract, the Owner must receive from the Contractor and each subcontractor or agent a copy of all required BOLI & DOL forms and Weekly Certified Payrolls from the Contractor and each subcontractor or agent.

22.02 Upon completion of this contract, the Owner must receive from the Contractor and each subcontractor a copy of all required BOLI and DOL forms for project closeout.

22.03 These forms and any required affidavits will be required before any funds retained are released to the Contractor. Forms may be obtained from BOLI and DOL. In some cases fees are required to accompany forms submitted. The Contractor is responsible for payment of these fees and shall make all applications directly to BOLI/DOL. These fees shall be incidental to all bid items of this Contract.

ARTICLE 23—NONDISCRIMINATION

23.01 During the performance of this contract, the Contractor shall comply with all federal and state nondiscrimination laws, including, but not limited to 42 U.S.C. 12101 et seq, the Americans with Disabilities Act (ADA).

This document is a MODIFIED version of EJCDC® C-200, Instructions to Pre-Qualified Bidders for Construction Contract, Copyright© 2018 by the National Society of Professional Engineers, American Council of Engineering Companies, and American Society of Civil Engineers, or is based in part on excerpts from copyrighted EJCDC documents. All rights reserved. Those portions of the text that originated in copyrighted EJCDC documents remain subject to the copyright.

DocuSign Envelope ID: D92FB7CA-DD9A-40FF-B59F-20FB66385E4F

SECTION 00 40 00 - BID FORM

(To be submitted with Bid)

MAHLER WATER RECLAMATION FACILITY IMPROVEMENTS, PHASE 1
CITY OF SWEET HOME, OREGON

THIS BID IS SUBMITTED TO: City of Sweet Home
Attn: Greg Springman, Public Works Director
3225 Main Street
Sweet Home, OR 97386

1.01 The undersigned Bidder proposes and agrees, if this Bid is accepted, to enter into an Agreement with OWNER in the form included in the Bidding Documents to perform all Work as specified or indicated in the Bidding Documents for the prices and within the times indicated in this Bid and in accordance with the other terms and conditions of the Bidding Documents.

2.01 Bidder accepts all of the terms and conditions of the Advertisement for Bid and Instructions to Bidders, including without limitation those dealing with the disposition of Bid security. The Bid will remain subject to acceptance for 30 days after the Bid opening, or for such longer period of time that Bidder may agree to in writing upon request of OWNER.

2.02 Bidder agrees that the Work will be substantially complete and will be completed and ready for final payment in accordance with Paragraph 15.06 of the General Conditions on or before the **dates or within the number of calendar days indicated in the Agreement.**

2.03 Bidder agrees to complete the Work required to complete Milestone 1 in accordance with Article 4 of the Agreement by June 1, 2023.

2.04 Bidder accepts the provisions of the Agreement as to liquidated damages as stipulated in Article 4.05 of the Agreement and in the General Conditions.

3.01 Refer to the Instructions to Bidders for forms and documents that must be executed in full and submitted with the bid.

3.02 The terms used in this Bid with initial capital letters have the meanings indicated in the Instructions to Bidders, and the General Conditions.

3.03 In submitting this Bid, Bidder represents, as set forth in the Agreement, that:

A. Bidder has examined and carefully studied the Bidding Documents, the other related data and documents identified in the Bidding Documents, and the following Addenda, receipt of all which is hereby acknowledged.

Addendum No.	Addendum Date
_____	_____
_____	_____
_____	_____
_____	_____

DocuSign Envelope ID: D92FB7CA-DD9A-40FF-B59F-20FB66385E4F

B. Bidder has visited the Site and become familiar with and is satisfied as to the general, local and Site conditions that may affect cost, progress, and performance of the Work.

C. Bidder is familiar with and is satisfied as to all federal, state and local Laws and Regulations that may affect cost, progress and performance of the Work.

D. Bidder has carefully studied all conditions at or contiguous to the Site and all drawings of physical conditions in or relating to existing surface or subsurface structures at or contiguous to the Site.

E. Bidder has obtained and carefully studied (or assumes responsibility for having done so) all additional or supplementary examinations, investigations, explorations, tests, studies and data concerning conditions (surface, subsurface and Underground Facilities) at or contiguous to the Site which may affect cost, progress, or performance of the Work or which relate to any aspect of the means, methods, techniques, sequences, and procedures of construction to be employed by Bidder, including applying the specific means, methods, techniques, sequences, and procedures of construction expressly required by the Bidding Documents to be employed by Bidder, and safety precautions and programs incident thereto.

F. Bidder does not consider that any further examinations, investigations, explorations, tests, studies, or data are necessary for the determination of this Bid for performance of the Work at the price(s) bid and within the times and in accordance with the other terms and conditions of the Bidding Documents.

G. Bidder is aware of the general nature of work to be performed by OWNER and others at the Site that relates to the Work as indicated in the Bidding Documents.

H. Bidder has correlated the information known to Bidder, information and observations obtained from visits to the Site, reports and drawings identified in the Bidding Documents, and all additional examinations, investigations, explorations, tests, studies, and data with the Bidding Documents.

I. Bidder has given OWNER written notice of all conflicts, errors, ambiguities, or discrepancies that Bidder has discovered in the Bidding Documents, and the written resolution thereof by OWNER is acceptable to Bidder.

J. The Bidding Documents are generally sufficient to indicate and convey understanding of all terms and conditions for the performance of the Work for which this Bid is submitted.

4.01 Bidder further represents that this Bid is genuine and not made in the interest of or on behalf of any undisclosed individual or entity and is not submitted in conformity with any agreement or rules of any group, association, organization or corporation; Bidder has not directly or indirectly induced or solicited any other Bidder to submit a false or sham Bid; Bidder has not solicited or induced any individual or entity to refrain from bidding; and Bidder has not sought by collusion to obtain for itself any advantage over any other Bidder or over OWNER.

5.01 Bidder will complete the Work in accordance with the Contract Documents for the price described in the following bid schedule within the time of completion specified in the Agreement.

DocuSign Envelope ID: D92FB7CA-DD9A-40FF-B59F-20FB66385E4F

BID SCHEDULE

Bidder shall submit a Bid as set forth in the Bid form. Submission of Bids on this schedule signifies Bidder's willingness to enter into a Contract for the price offered. Bidders offering a Bid on this schedule must be capable of completing the Work within the time period stated in the Agreement. OWNER may elect to delete any bid item from the work.

1.01 LUMP SUM WORK

A. Bidder proposes and agrees to accept as full payment the following bid amount for the Mahler Reclamation Facility Improvements proposed within the Bidding Documents, and certifies that this amount is based upon the undersigned's own estimate of quantities and costs and includes sales, consumer, use, and other taxes, except as provided below, overhead and profit. Lump sum work includes the cost of all 'A'-listed Major Equipment.

B. Lump Sum Bid Price: $_____

1.02 MAJOR EQUIPMENT OPTIONS PRICE SCHEDULES ("A-LIST")

Bidder further agrees to accept as full payment for furnishing the items listed below, and any Work necessary to install the items, for the prices included in the "Option Price" column for each item. Additional instructions for the Bidders are as follows:

A. The Option Price shall include the quantity in the Bidding Documents and all associated requirements identified in the specification sections listed below as the responsibility of the contractor, equipment manufacturer and/or supplier.

B. The Bidder shall provide a price for the 'A'-listed manufacturer.

C. If the Owner selects an option other than an 'A'-listed manufacturer, the lump sum bid price will be modified by change order after Contract award.

D. Include in the Option Price for each Bidder-proposed option, the cost of Work, redesign and construction changes, including, but not limited to, electrical, mechanical, structural, and any other modifications to the Work necessary to make the several parts fit together and perform as specified.

E. Bidder may propose an "or equal" option for the 'A'-listed Major Equipment where indicated by including the Manufacturer's name for items where a blank has been provided. Approval of "or equal" options will not be considered during Bidding.

F. Any schedule delays caused by Owner's selection of an option other than the option included in the Base Bid Price will not constitute grounds for an adjustment to the Agreement.

G. Attach additional pages, if required to provide pricing for additional equipment options.

Major Equipment Options Schedule (Fill in Option Price for all Named Manufacturers)		
Option	**Manufacturer or Supplier**	**Option Price**
Submersible Wastewater Pumps (Specification No. 43 25 02)		
A	Flygt	$ Write in Amount:
B	KSB	$ Write in Amount:
C	ABS	$ Write in Amount:
D	Other (write in):	$ Write in Amount:
Packaged Diesel Engine Generator Set (Specification No. 26 32 00)		
A	Cummins	$ Write in Amount:
B	Caterpillar	$ Write in Amount:
C	Other (write in):	$ Write in Amount:

1.03 ADDITIVE AND DEDUCTIVE UNIT PRICE WORK BID ITEMS

Provide unit prices for increased (additive) or reduced (deductive) quantities of the following Additive and Deductive (AD) Unit Price Work Bid Items, as detailed in Specification Section 01 29 02 Measurement and Payment. Lump Sum Bid Price shall include the Base Bid Quantity noted for each AD Bid Item. Additive (Add) Unit Prices shall be for actual construction quantities in excess of the Base Bid Quantity. Deductive (Deduct) Unit Prices shall be for quantities less than the Base Bid Quantity. Engineer shall confirm all quantities for Additive or Deductive Unit Price Work Bid Items.

AD-1. General Excavation – Unclassified with Offsite Disposal
Base Bid Quantity included with Lump Sum Bid: **6,100 Cubic Yards**
Add $_____ per Cubic Yard for additional General Excavation – Unclassified with Offsite Disposal Write in Amount:
Deduct $_____ per Cubic Yard for reduced General Excavation – Unclassified with Offsite Disposal Write in Amount:

AD-2. Rock Excavation
Base Bid Quantity included with Lump Sum Bid: **550 Cubic Yards**
Add $_____ per Cubic Yard for additional Rock Excavation Write in Amount:
Deduct $_____ per Cubic Yard for reduced Rock Excavation Write in Amount:

AD-3. Excavation Dewatering
Quantity included in Lump Sum Bid: **60 Days**
Add $_____ per Day for additional Excavation Dewatering Write in Amount:
Deduct $_____ per Day for reduced Excavation Dewatering Write in Amount:

AD-4. Sewer Bypass Pumping
Quantity included in Lump Sum Bid: **8 Days**
Add $_____ per Day for additional Sewer Bypass Pumping Write in Amount:
Deduct $_____ per Day for reduced Sewer Bypass Pumping Write in Amount:

SUBMITTED on_____, 20_____

DocuSign Envelope ID: D92FB7CA-DD9A-40FF-B59F-20FB66385E4F

Bidder Identification and Signatures

Name of Firm: _____

Federal Tax ID No: _____

State of Incorporation and Oregon CCB License No: _____

Bidder ☐ IS / ☐ IS NOT a "Resident Bidder" as defined by ORS 279.029.

Signature and Printed Name(s): *(If Bidder is a partnership or joint venture, all parties must sign below)*

_____ _____

_____ _____

Title _____

Date _____

END OF SECTION

DocuSign Envelope ID: D92FB7CA-DD9A-40FF-B59F-20FB66385E4F

BID BOND (PENAL SUM FORM)

Bidder Name: Address *(principal place of business)*:	**Surety** Name: Address *(principal place of business)*:
Owner Name: City of Sweet Home, Oregon Address *(principal place of business)*: 3225 Main Street Sweet Home, OR 97386	**Bid** Project *(name and location)*: Mahler Water Reclamation Improvements, Ph 1 1357 Pleasant Valley Road Sweet Home, OR 97386 Bid Due Date: September 14, 2022
Bond Penal Sum: Date of Bond:	
Surety and Bidder, intending to be legally bound hereby, subject to the terms set forth in this Bid Bond, do each cause this Bid Bond to be duly executed by an authorized officer, agent, or representative.	
Bidder	Surety
_____ *(Full formal name of Bidder)*	_____ *(Full formal name of Surety) (corporate seal)*
By: _____ *(Signature)*	By: _____ *(Signature) (Attach Power of Attorney)*
Name: _____ *(Printed or typed)*	Name: _____ *(Printed or typed)*
Title: _____	Title: _____
Attest: _____ *(Signature)*	Attest: _____ *(Signature)*
Name: _____ *(Printed or typed)*	Name: _____ *(Printed or typed)*
Title:	Title:
Notes: (1) Note: Addresses are to be used for giving any required notice. (2) Provide execution by any additional parties, such as joint venturers, if necessary.	

Copyright© 2018 National Society of Professional Engineers, American Council of Engineering Companies, and American Society of Civil Engineers. All rights reserved.

DocuSign Envelope ID: D92FB7CA-DD9A-40FF-B59F-20FB66385E4F

1. Bidder and Surety, jointly and severally, bind themselves, their heirs, executors, administrators, successors, and assigns to pay to Owner upon default of Bidder the penal sum set forth on the face of this Bond. Payment of the penal sum is the extent of Bidder's and Surety's liability. Recovery of such penal sum under the terms of this Bond will be Owner's sole and exclusive remedy upon default of Bidder.
2. Default of Bidder occurs upon the failure of Bidder to deliver within the time required by the Bidding Documents (or any extension thereof agreed to in writing by Owner) the executed Agreement required by the Bidding Documents and any performance and payment bonds required by the Bidding Documents.
3. This obligation will be null and void if:
   - 3.1. Owner accepts Bidder's Bid and Bidder delivers within the time required by the Bidding Documents (or any extension thereof agreed to in writing by Owner) the executed Agreement required by the Bidding Documents and any performance and payment bonds required by the Bidding Documents, or
   - 3.2. All Bids are rejected by Owner, or
   - 3.3. Owner fails to issue a Notice of Award to Bidder within the time specified in the Bidding Documents (or any extension thereof agreed to in writing by Bidder and, if applicable, consented to by Surety when required by Paragraph 5 hereof).
4. Payment under this Bond will be due and payable upon default of Bidder and within 30 calendar days after receipt by Bidder and Surety of written notice of default from Owner, which notice will be given with reasonable promptness, identifying this Bond and the Project and including a statement of the amount due.
5. Surety waives notice of any and all defenses based on or arising out of any time extension to issue Notice of Award agreed to in writing by Owner and Bidder, provided that the total time for issuing Notice of Award including extensions does not in the aggregate exceed 120 days from the Bid due date without Surety's written consent.
6. No suit or action will be commenced under this Bond prior to 30 calendar days after the notice of default required in Paragraph 4 above is received by Bidder and Surety, and in no case later than one year after the Bid due date.
7. Any suit or action under this Bond will be commenced only in a court of competent jurisdiction located in the state in which the Project is located.
8. Notices required hereunder must be in writing and sent to Bidder and Surety at their respective addresses shown on the face of this Bond. Such notices may be sent by personal delivery, commercial courier, or by United States Postal Service registered or certified mail, return receipt requested, postage pre-paid, and will be deemed to be effective upon receipt by the party concerned.
9. Surety shall cause to be attached to this Bond a current and effective Power of Attorney evidencing the authority of the officer, agent, or representative who executed this Bond on behalf of Surety to execute, seal, and deliver such Bond and bind the Surety thereby.
10. This Bond is intended to conform to all applicable statutory requirements. Any applicable requirement of any applicable statute that has been omitted from this Bond will be deemed to be included herein as if set forth at length. If any provision of this Bond conflicts with any applicable statute, then the provision of said statute governs and the remainder of this Bond that is not in conflict therewith continues in full force and effect.
11. The term "Bid" as used herein includes a Bid, offer, or proposal as applicable.

Copyright© 2018 National Society of Professional Engineers, American Council of Engineering Companies, and American Society of Civil Engineers. All rights reserved.

DocuSign Envelope ID: D92FB7CA-DD9A-40FF-B59F-20FB66385E4F

SECTION 00 43 33- PROPOSED PRODUCTS LIST

(To be submitted with Bid)

MAHLER WATER RECLAMATION FACILITY IMPROVEMENTS, PHASE 1
CITY OF SWEET HOME, OREGON

The Bidder states that the manufacturer of each listed item of equipment or material proposed by the Contractor for use on this Project will be as listed below:

Material Item	Description	Equipment or Material Manufacturer (Do not show Dealer or Supplier)
1	Standby Engine Generator Set (26 32 00)	
2	Submersible Wastewater Pumps (43 25 02)	
3	Check Valves (40 05 60)	
4	Plug Valves (40 05 60)	
5	Actuator (40 05 57.23)	
6	Magnetic Flow Meters (40 71 00)	
7	Level Transducer (40 72 00)	

The Bidder must include in the space provided, the name of the equipment or material manufacturer he has used in determining his Base Bid which will be used by the Successful Bidder in constructing the project. If the Bidder does not fill in any of the spaces, it will be considered that the Bidder has selected the first-named manufacturer as his selection for those spaces not filled in.

After the opening of Bids, no changes or substitutions from those listed manufacturers will be allowed without the express written approval of the Engineer. If such change is permitted by the Engineer, it will be evaluated in accordance with provisions of the Contract Documents pertaining to Specified Items/Proposed Equivalents.

Circumstances which will justify changes to the above listing are limited to the following:

1. Manufacturer is unable to meet specifications.
2. Manufacturer fails to honor original quotation upon which the Contractor's bid was based.
3. Manufacturer goes out of business or ceases to make the specified product.

It is the responsibility of the Contractor to furnish materials and equipment meeting the requirements of the Specifications, and acceptance of the bid does not constitute nor imply favorable review or approval of items proposed. The Owner reserves the right to deny approval or acceptance of any equipment or materials which do not comply with Specifications even though listed herein.

DocuSign Envelope ID: D92FB7CA-DD9A-40FF-B59F-20FB66385E4F

_____
(Signature)

_____
(Type or Print Name)

_____
(Title)

_____
(Company)

END OF SECTION

DocuSign Envelope ID: D92FB7CA-DD9A-40FF-B59F-20FB66385E4F

SECTION 00 43 37 - FIRST-TIER SUBCONTRACTOR DISCLOSURE FORM

(To Be Submitted After Bid)

FOR

CITY OF SWEET HOME
MAHLER WATER RECLAMATION FACILITY IMPROVEMENTS, PHASE 1

Bid Closing: **September 14, 2022** at 2:00 p.m.

Disclosure Submittal Deadline**:** **September 14, 2022** at 4:00 p.m.

This form must be completed, signed and submitted at the location specified in the Invitation to Bid on the advertised bid closing date and within two working hours after the advertised bid closing time.

Bidders are required to disclose information about certain first-tier subcontractors (see ORS 279C.370). Specifically, when the contract amount of a first-tier subcontractor furnishing labor and material would be greater than or equal to: (i) 5% of the project Bid, but at least $15,000; or (ii) $350,000 regardless of the percentage, the Bidder must disclose the following information about that subcontractor either in its Bid submission, or within two hours after Bid Closing.

List below the names of each subcontractor that will be furnishing labor or furnishing labor and materials and that are required to be disclosed, the category of work that the subcontractor will be performing and the dollar value of the subcontract. Enter 'NONE' if there are no subcontractors that are required to be disclosed. (ATTACH ADDITIONAL SHEETS IF NEEDED).

Subcontractor Name	Dollar Value	Category of Work

Failure to submit this form by the disclosure deadline will result in a nonresponsive bid. Failure to list a Pre-Qualified Electrical Subcontactor will result in a nonresponsive bid. A nonresponsive bid will not be considered for award.

Form Submitted by (Bidder Name): _____

Contact Name: _____ **Phone No.:** _____

DocuSign Envelope ID: D92FB7CA-DD9A-40FF-B59F-20FB66385E4F

THIS PAGE LEFT BLANK INTENTIONALLY

DocuSign Envelope ID: D92FB7CA-DD9A-40FF-B59F-20FB66385E4F

SECTION 00 45 19 – NON-COLLUSION AFFIDAVIT
(To be submitted with Bid)

MAHLER WATER RECLAMATION FACILITY IMPROVEMENTS, PHASE 1
CITY OF SWEET HOME, OREGON

STATE OF OREGON
COUNTY OF LINN

I state that I am_____(title) of_____(name of firm) and that I am authorized to make this affidavit on behalf of my firm and its owners, directors, and officers. I am the person responsible in my firm for the price(s) and the amount of this bid.

I state that:

(1) The price(s) and amount of this bid have been arrived at independently and without consultation, communication, or agreement with any other contractor, bidder, or potential bidder, except as disclosed on the attached appendix.

(2) Neither the price(s) nor the amount of this bid, and neither the approximate price(s) nor approximate amount of this bid, have been disclosed to any other firm or person who is a bidder or potential bidder, and they will not be disclosed before bid opening.

(3) No attempt has been made or will be made to induce any firm or person to refrain from bidding on this contract, to submit a bid higher than this bid, or to submit any intentionally high or noncompetitive bid or other form of complementary bid.

(4) The bid of my firm is made in good faith and not pursuant to any agreement or discussion with, or inducement from, any firm or person to submit a complementary or other noncompetitive bid.

(5) _____(name of firm), its affiliates, subsidiaries, officers, directors and employees are not currently under investigation by any governmental agency for violating any non-collusion statutes and have not in the last four years been convicted of or found liable for any act prohibited by state or federal law in any jurisdiction, involving conspiracy or collusion with respect to bidding on any public contract, except as described in the attached appendix.

I state that_____(name of firm) understands and acknowledges that the above representations are material and important and will be relied on by the City of Sweet Home in awarding the contract(s) for which this bid is submitted. I understand, and my firm understands that any misstatement in this affidavit is and shall be treated as fraudulent concealment from the City of Sweet Home of the true facts relating to the submission of bids for this contract.

_____
Authorized Signature

_____
Name of Company / Position

Sworn to and subscribed before me this_____day of_____, 20____.

_____ _____
Notary Public for the State of Oregon My Commission Expires

DocuSign Envelope ID: D92FB7CA-DD9A-40FF-B59F-20FB66385E4F

(THIS PAGE LEFT BLANK INTENTIONALLY)

DocuSign Envelope ID: D92FB7CA-DD9A-40FF-B59F-20FB66385E4F

NOTICE OF AWARD

[To Be Completed After Contract Award by Owner]

Date of Issuance:			
Owner:	City of Sweet Home	Owner's Project No.:	
Engineer:	West Yost Associates	Engineer's Project No.:	936-50-21-09
Project:	Mahler Water Reclamation Facility Improvements, Phase 1		
Contract Name:			
Bidder:			
Bidder's Address:			

You are notified that Owner has accepted your Bid dated **[Date]** for the above Contract, and that you are the Successful Bidder and are awarded a Contract for:

> Improvements and modifications to the City of Sweet Home Mahler Water Reclamation Facility (Mahler WRF) includes furnishing all labor, materials, and equipment necessary for the construction of new influent pump station (IPS), new IPS piping and appurtenances, new Main Electrical and Blower (MEB) Building, new standby engine generator with automatic transfer switch, new electrical service entrance, installation of owner-supplied electrical Motor Control Centers (MCCs) and plant control panels. Site work includes demolition of existing trees, structures and roadways, general excavation with onsite and offsite disposal, installation of upper plant area aggregate base rock. Site piping will include connection and re-routing existing influent sanitary sewers to the new IPS, force mains and gravity pipelines that will be completed during Phase 2 construction.

The Contract Price of the awarded Contract is $**[Contract Price]**. Contract Price is subject to adjustment based on the provisions of the Contract, including but not limited to those governing changes, Unit Price Work, and Work performed on a cost-plus-fee basis, as applicable.

Four (4) unexecuted counterparts of the Agreement accompany this Notice of Award, and one copy of the Contract Documents accompanies this Notice of Award, or has been transmitted or made available to Bidder electronically.

☐ Drawings will be delivered separately from the other Contract Documents.

You must comply with the following conditions precedent within 15 days of the date of receipt of this Notice of Award:

1. Deliver to Owner four counterparts of the Agreement, signed by Bidder (as Contractor).
2. Deliver with the signed Agreement(s) the Contract security (such as required performance and payment bonds) and insurance documentation, as specified in the Instructions to Bidders and in the General Conditions, Articles 2 and 6.
3. Other conditions precedent (if any): **None**

Failure to comply with these conditions within the time specified will entitle Owner to consider you in default, annul this Notice of Award, and declare your Bid security forfeited.

Within 10 days after you comply with the above conditions, Owner will return to you one fully signed counterpart of the Agreement, together with any additional copies of the Contract Documents as indicated in Paragraph 2.02 of the General Conditions.

Copyright© 2018 National Society of Professional Engineers, American Council of Engineering Companies, and American Society of Civil Engineers. All rights reserved.

DocuSign Envelope ID: D92FB7CA-DD9A-40FF-B59F-20FB66385E4F

Owner: City of Sweet Home, Oregon

By *(signature)*: _____

Name *(printed)*: Greg Springman

Title: Public Works Director

Copy: Engineer

Copyright© 2018 National Society of Professional Engineers, American Council of Engineering Companies, and American Society of Civil Engineers. All rights reserved.

AGREEMENT BETWEEN OWNER AND CONTRACTOR FOR CONSTRUCTION CONTRACT (STIPULATED PRICE)

This Agreement is by and between City of Sweet Home, Oregon ("Owner") and_____ _____ ("Contractor").

Terms used in this Agreement have the meanings stated in the General Conditions and the Supplementary Conditions.

Owner and Contractor hereby agree as follows:

ARTICLE 1—WORK

1.01 Contractor shall complete all Work as specified or indicated in the Contract Documents. The Work is generally described as follows:

MAHLER WATER RECLAMATION FACILITY IMPROVEMENTS, PHASE 1

ARTICLE 2—THE PROJECT

2.01 The Project, of which the Work under the Contract Documents is a part, is generally described as follows:

Improvements and modifications to the City of Sweet Home Mahler Water Reclamation Facility (Mahler WRF) includes furnishing all labor, materials, and equipment necessary for the construction of new influent pump station (IPS), new IPS piping and appurtenances, new Main Electrical and Blower (MEB) Building, new standby engine generator with automatic transfer switch, new electrical service entrance, installation of owner-supplied electrical Motor Control Centers (MCCs) and plant control panels. Site work includes demolition of existing trees, structures and roadways, general excavation with onsite and offsite disposal, installation of upper plant area aggregate base rock. Site piping will include connection and re-routing existing influent sanitary sewers to the new IPS, force mains and gravity pipelines that will be completed during Phase 2 construction.

ARTICLE 3—ENGINEER

3.01 The Owner has retained West Yost Associates, Inc. ("Engineer") to act as Owner's representative, assume all duties and responsibilities of Engineer, and have the rights and authority assigned to Engineer in the Contract.

3.02 The part of the Project that pertains to the Work has been designed by "Engineer".

ARTICLE 4—CONTRACT TIMES

4.01 *Time is of the Essence*

4.03 *Contract Times: Days*

A. The Work will be substantially complete within 300 days after the date when the Contract Times commence to run as provided in Paragraph 4.01 of the General Conditions, and completed and ready for final payment in accordance with Paragraph 15.06 of the General Conditions within 365 days after the date when the Contract Times commence to run.

This document is a MODIFIED version of EJCDC® C-520, Agreement between Owner and Contractor for Construction Contract (Stipulated Price), Copyright© 2018 by the National Society of Professional Engineers, American Council of Engineering Companies, and American Society of Civil Engineers, or is based in part on excerpts from copyrighted EJCDC documents. All rights reserved. Those portions of the text that originated in copyrighted EJCDC documents remain subject to the copyright.

4.04 *Milestones*

A. Parts of the Work must be substantially completed on or before the following Milestone(s):

1. **Milestone 1.** Contractor shall complete and submit Payment Estimates for a minimum of $5 Million by June 1, 2023. If required, Owner may, at Owner's sole discretion, to increase the project scope to assure Milestone 1 is achieved.

4.05 *Liquidated Damages*

A. Contractor and Owner recognize that time is of the essence as stated in Paragraph 4.01 above and that Owner will suffer financial and other losses if the Work is not completed and Milestones not achieved within the Contract Times, as duly modified. The parties also recognize the delays, expense, and difficulties involved in proving, in a legal or arbitration proceeding, the actual loss suffered by Owner if the Work is not completed on time. Accordingly, instead of requiring any such proof, Owner and Contractor agree that as liquidated damages for delay (but not as a penalty):

1. *Milestone 1 Completion:* Contractor shall pay Owner $**5000** for each day that expires after the time (as duly adjusted pursuant to the Contract) specified above for Milestone 1.

2. *Substantial Completion:* Contractor shall pay Owner $**1000** for each day that expires after the time (as duly adjusted pursuant to the Contract) specified above for Substantial Completion, until the Work is substantially complete.

3. *Completion of Remaining Work:* After Substantial Completion, if Contractor shall neglect, refuse, or fail to complete the remaining Work within the Contract Times (as duly adjusted pursuant to the Contract) for completion and readiness for final payment, Contractor shall pay Owner **$500** for each day that expires after such time until the Work is completed and ready for final payment.

4. Liquidated damages for failing to timely attain Substantial Completion and final completion are not additive, and will not be imposed concurrently.

B. If Owner recovers liquidated damages for a delay in completion by Contractor, then such liquidated damages are Owner's sole and exclusive remedy for such delay, and Owner is precluded from recovering any other damages, whether actual, direct, excess, or consequential, for such delay, except for special damages (if any) specified in this Agreement.

ARTICLE 5—CONTRACT PRICE

5.01 Owner shall pay Contractor for completion of the Work in accordance with the Contract Documents, the amounts that follow, subject to adjustment under the Contract:

A. For all Work other than Additive and Deductive Unit Price Work, a lump sum of $**[PRICE]**.

All specific cash allowances are included in the above price in accordance with Paragraph 13.02 of the General Conditions.

B. For all Unit Price Work, an amount equal to the sum of the extended prices (established for each separately identified item of Unit Price Work by multiplying the unit price times the actual quantity of that item).

This document is a MODIFIED version of EJCDC® C-520, Agreement between Owner and Contractor for Construction Contract (Stipulated Price), Copyright© 2018 by the National Society of Professional Engineers, American Council of Engineering Companies, and American Society of Civil Engineers, or is based in part on excerpts from copyrighted EJCDC documents. All rights reserved. Those portions of the text that originated in copyrighted EJCDC documents remain subject to the copyright.

Item No.	Description	Units	Unit Price
AD-1A	Additive General Excavation-Unclassified with Offsite Disposal	Cubic Yards	$
AD-1D	Deductive General Excavation-Unclassified with Offsite Disposal	Cubic Yards	$
AD-2A	Additive Rock Excavation	Cubic Yards	$
AD-2D	Deductive Rock Excavation	Cubic Yards	$
AD-3A	Additive Excavation Dewatering	Days	$
AD-3D	Deductive Excavation Dewatering	Days	$
AD-4A	Additive Sewer Bypass Pumping	Days	$
AD-4A	Deductive Sewer Bypass Pumping	Days	$

The extended prices for Unit Price Work set forth as of the Effective Date of the Contract are based on estimated quantities. As provided in Paragraph 13.03 of the General Conditions, estimated quantities are not guaranteed, and determinations of actual quantities and classifications are to be made by Engineer.

C. For all Work, at the prices stated in Contractor's Bid, attached hereto as an exhibit.

ARTICLE 6—PAYMENT PROCEDURES

6.01 *Submittal and Processing of Payments*

A. Contractor shall submit Applications for Payment in accordance with Article 15 of the General Conditions. Applications for Payment will be processed by Engineer as provided in the General Conditions.

6.02 *Progress Payments; Retainage*

A. Owner shall make progress payments on the basis of Contractor's Applications for Payment on or about the 10th day of each month during performance of the Work as provided in Paragraph 6.02.A.1 below, provided that such Applications for Payment have been submitted in a timely manner and otherwise meet the requirements of the Contract. All such payments will be measured by the Schedule of Values established as provided in the General Conditions.

1. Prior to Substantial Completion, progress payments will be made in an amount equal to the percentage indicated below but, in each case, less the aggregate of payments previously made and less such amounts as Owner may withhold, including but not limited to liquidated damages, in accordance with the Contract.

a. 95 percent of the value of the Work completed (with the balance being retainage).

b. 95 percent of cost of materials and equipment not incorporated in the Work (with the balance being retainage).

B. Upon Substantial Completion of the entire construction to be provided under the construction Contract Documents, Owner shall pay an amount sufficient to increase total payments to Contractor to 100 percent of the Work completed, less such amounts set off by Owner pursuant to Paragraph 15.01.E of the General Conditions, and less 200 percent of

This document is a MODIFIED version of EJCDC® C-520, Agreement between Owner and Contractor for Construction Contract (Stipulated Price), Copyright© 2018 by the National Society of Professional Engineers, American Council of Engineering Companies, and American Society of Civil Engineers, or is based in part on excerpts from copyrighted EJCDC documents. All rights reserved. Those portions of the text that originated in copyrighted EJCDC documents remain subject to the copyright.

Engineer's estimate of the value of Work to be completed or corrected as shown on the punch list of items to be completed or corrected prior to final payment.

6.03 *Final Payment*

A. Upon final completion and acceptance of the Work, Owner shall pay the remainder of the Contract Price in accordance with Paragraph 15.06 of the General Conditions.

6.04 *Consent of Surety*

A. Owner will not make final payment, or return or release retainage at Substantial Completion or any other time, unless Contractor submits written consent of the surety to such payment, return, or release.

ARTICLE 7—CONTRACT DOCUMENTS

7.01 *Contents*

A. The Contract Documents consist of all of the following:

1. This Agreement.
2. Performance bond.
3. Payment bond.
4. General Conditions.
5. Specifications as listed in the table of contents of the project manual.
6. Drawings (not attached but incorporated by reference) consisting of 135 sheets with each sheet bearing the following general title: Mahler WRF Improvements Project, Phase 1
7. Addenda (numbers ___ to ___, inclusive).
8. Exhibits to this Agreement (enumerated as follows):
   a. Contractor's Bid (pages ___ to ___, inclusive).
   b. Geotechnical Data Report
9. The following which may be delivered or issued on or after the Effective Date of the Contract and are not attached hereto:
   a. Notice to Proceed.
   b. Work Change Directives.
   c. Change Orders.
   d. Field Orders.

Warranty Bond, if any.

B. The Contract Documents listed in Paragraph 7.01.A are attached to this Agreement (except as expressly noted otherwise above).

C. There are no Contract Documents other than those listed above in this Article 7.

This document is a MODIFIED version of EJCDC® C-520, Agreement between Owner and Contractor for Construction Contract (Stipulated Price), Copyright© 2018 by the National Society of Professional Engineers, American Council of Engineering Companies, and American Society of Civil Engineers, or is based in part on excerpts from copyrighted EJCDC documents. All rights reserved. Those portions of the text that originated in copyrighted EJCDC documents remain subject to the copyright.

D. The Contract Documents may only be amended, modified, or supplemented as provided in the Contract.

ARTICLE 8—REPRESENTATIONS, CERTIFICATIONS, AND STIPULATIONS

8.01 *Contractor's Representations*

A. In order to induce Owner to enter into this Contract, Contractor makes the following representations:

1. Contractor has examined and carefully studied the Contract Documents, including Addenda.

2. Contractor has visited the Site, conducted a thorough visual examination of the Site and adjacent areas, and become familiar with the general, local, and Site conditions that may affect cost, progress, and performance of the Work.

3. Contractor is familiar with all Laws and Regulations that may affect cost, progress, and performance of the Work.

4. Contractor has carefully studied the reports of explorations and tests of subsurface conditions at or adjacent to the Site and the drawings of physical conditions relating to existing surface or subsurface structures at the Site that have been identified in the Supplementary Conditions, with respect to the Technical Data in such reports and drawings.

5. Contractor has carefully studied the reports and drawings relating to Hazardous Environmental Conditions, if any, at or adjacent to the Site that have been identified in the Supplementary Conditions, with respect to Technical Data in such reports and drawings.

6. Contractor has considered the information known to Contractor itself; information commonly known to contractors doing business in the locality of the Site; information and observations obtained from visits to the Site; the Contract Documents; and the Technical Data identified in the Supplementary Conditions or by definition, with respect to the effect of such information, observations, and Technical Data on (a) the cost, progress, and performance of the Work; (b) the means, methods, techniques, sequences, and procedures of construction to be employed by Contractor; and (c) Contractor's safety precautions and programs.

7. Based on the information and observations referred to in the preceding paragraph, Contractor agrees that no further examinations, investigations, explorations, tests, studies, or data are necessary for the performance of the Work at the Contract Price, within the Contract Times, and in accordance with the other terms and conditions of the Contract.

8. Contractor is aware of the general nature of work to be performed by Owner and others at the Site that relates to the Work as indicated in the Contract Documents.

9. Contractor has given Engineer written notice of all conflicts, errors, ambiguities, or discrepancies that Contractor has discovered in the Contract Documents, and of discrepancies between Site conditions and the Contract Documents, and the written resolution thereof by Engineer is acceptable to Contractor.

This document is a MODIFIED version of EJCDC® C-520, Agreement between Owner and Contractor for Construction Contract (Stipulated Price), Copyright© 2018 by the National Society of Professional Engineers, American Council of Engineering Companies, and American Society of Civil Engineers, or is based in part on excerpts from copyrighted EJCDC documents. All rights reserved. Those portions of the text that originated in copyrighted EJCDC documents remain subject to the copyright.

10. The Contract Documents are generally sufficient to indicate and convey understanding of all terms and conditions for performance and furnishing of the Work.

11. Contractor's entry into this Contract constitutes an incontrovertible representation by Contractor that without exception all prices in the Agreement are premised upon performing and furnishing the Work required by the Contract Documents.

8.02 *Contractor's Certifications*

A. Contractor certifies that it has not engaged in corrupt, fraudulent, collusive, or coercive practices in competing for or in executing the Contract. For the purposes of this Paragraph 8.02:

1. "corrupt practice" means the offering, giving, receiving, or soliciting of anything of value likely to influence the action of a public official in the bidding process or in the Contract execution;

2. "fraudulent practice" means an intentional misrepresentation of facts made (a) to influence the bidding process or the execution of the Contract to the detriment of Owner, (b) to establish Bid or Contract prices at artificial non-competitive levels, or (c) to deprive Owner of the benefits of free and open competition;

3. "collusive practice" means a scheme or arrangement between two or more Bidders, with or without the knowledge of Owner, a purpose of which is to establish Bid prices at artificial, non-competitive levels; and

4. "coercive practice" means harming or threatening to harm, directly or indirectly, persons or their property to influence their participation in the bidding process or affect the execution of the Contract.

8.03 *General Conditions*

A. Owner stipulates that if the General Conditions that are made a part of this Contract are EJCDC® C-700 (00 70 00), Standard General Conditions for the Construction Contract (2018), published by the Engineers Joint Contract Documents Committee, modified specifically for the Project and to consolidate Supplementary Conditions.

This document is a MODIFIED version of EJCDC® C-520, Agreement between Owner and Contractor for Construction Contract (Stipulated Price), Copyright© 2018 by the National Society of Professional Engineers, American Council of Engineering Companies, and American Society of Civil Engineers, or is based in part on excerpts from copyrighted EJCDC documents. All rights reserved. Those portions of the text that originated in copyrighted EJCDC documents remain subject to the copyright.

IN WITNESS WHEREOF, Owner and Contractor have signed this Agreement.

This Agreement will be effective on _____ (which is the Effective Date of the Contract).

Owner:

City of Sweet Home, Oregon
(typed or printed name of organization)

By: _____
(individual's signature)

Date: _____
(date signed)

Name: _____
(typed or printed)

Title: _____
(typed or printed)

Attest: _____
(individual's signature)

Title: _____
(typed or printed)

Address for giving notices:

3225 Main Street

Sweet Home, OR 97386

Designated Representative:

Name: _____
(typed or printed)

Title: _____
(typed or printed)

Address:

Phone: _____

Email: _____

*(If **[Type of Entity]** is a corporation, attach evidence of authority to sign. If **[Type of Entity]** is a public body, attach evidence of authority to sign and resolution or other documents authorizing execution of this Agreement.)*

Contractor:

_____
(typed or printed name of organization)

By: _____
(individual's signature)

Date: _____
(date signed)

Name: _____
(typed or printed)

Title: _____
(typed or printed)

*(If **[Type of Entity]** is a corporation, a partnership, or a joint venture, attach evidence of authority to sign.)*

Attest: _____
(individual's signature)

Title: _____
(typed or printed)

Address for giving notices:

Designated Representative:

Name: _____
(typed or printed)

Title: _____
(typed or printed)

Address:

Phone: _____

Email: _____

License No.: _____
(where applicable)

State: _____

This document is a MODIFIED version of EJCDC® C-520, Agreement between Owner and Contractor for Construction Contract (Stipulated Price), Copyright© 2018 by the National Society of Professional Engineers, American Council of Engineering Companies, and American Society of Civil Engineers, or is based in part on excerpts from copyrighted EJCDC documents. All rights reserved. Those portions of the text that originated in copyrighted EJCDC documents remain subject to the copyright.

THIS PAGE LEFT BLANK INTENTIONALLY

This document is a MODIFIED version of EJCDC® C-520, Agreement between Owner and Contractor for Construction Contract (Stipulated Price), Copyright© 2018 by the National Society of Professional Engineers, American Council of Engineering Companies, and American Society of Civil Engineers, or is based in part on excerpts from copyrighted EJCDC documents. All rights reserved. Those portions of the text that originated in copyrighted EJCDC documents remain subject to the copyright.

DocuSign Envelope ID: D92FB7CA-DD9A-40FF-B59F-20FB66385E4F

NOTICE TO PROCEED

Owner:	City of Sweet Home, Oregon	Owner's Project No.:	
Engineer:	West Yost Associates	Engineer's Project No.:	936-50-21-09
Contractor:		Contractor's Project No.:	
Project:	Mahler Water Reclamation Facility Improvements, Phase 1		
Contract Name:			
Effective Date of Contract:			

Owner hereby notifies Contractor that the Contract Times under the above Contract will commence to run on _____, 20__ pursuant to Paragraph 4.01 of the General Conditions.

On that date, Contractor shall start performing its obligations under the Contract Documents. No Work will be done at the Site prior to such date.

In accordance with the Agreement:

The date by which Substantial Completion must be achieved is August 31, 2022, and the date by which readiness for final payment must be achieved is October 26, 2023.

Before starting any Work at the Site, Contractor must comply with the following:

Owner: City of Sweet Home, Oregon

By *(signature)*: _____

Name *(printed)*: _____

Title: _____

Date Issued: _____

Copy: Engineer

Copyright© 2018 National Society of Professional Engineers, American Council of Engineering Companies, and American Society of Civil Engineers. All rights reserved.

DocuSign Envelope ID: D92FB7CA-DD9A-40FF-B59F-20FB66385E4F

(THIS PAGE LEFT BLANK INTENTIONALLY)

Copyright© 2018 National Society of Professional Engineers, American Council of Engineering Companies, and American Society of Civil Engineers. All rights reserved.

PERFORMANCE BOND

Contractor Name: Address *(principal place of business)*:	**Surety** Name: Address *(principal place of business)*:
Owner Name: **City of Sweet Home, Oregon** Mailing address *(principal place of business)*: **3225 Main Street** **Sweet Home, OR 97386**	**Contract** Description *(name and location)*: **Mahler WRF Improvements, Phase 1** **1357 Pleasant Valley Road** **Sweet Home, OR 97386** Contract Price: Effective Date of Contract:

Bond

Bond Amount:

Date of Bond:

(Date of Bond cannot be earlier than Effective Date of Contract)

Modifications to this Bond form:

☐ None ☐ See Paragraph 16

Surety and Contractor, intending to be legally bound hereby, subject to the terms set forth in this Performance Bond, do each cause this Performance Bond to be duly executed by an authorized officer, agent, or representative.

Contractor as Principal	Surety
_____ *(Full formal name of Contractor)*	_____ *(Full formal name of Surety) (corporate seal)*
By: _____ *(Signature)*	By: _____ *(Signature)(Attach Power of Attorney)*
Name: _____ *(Printed or typed)*	Name: _____ *(Printed or typed)*
Title: _____	Title: _____
Attest: _____ *(Signature)*	Attest: _____ *(Signature)*
Name: _____ *(Printed or typed)*	Name: _____ *(Printed or typed)*
Title: _____	Title: _____

Notes: (1) Provide supplemental execution by any additional parties, such as joint venturers. (2) Any singular reference to Contractor, Surety, Owner, or other party is considered plural where applicable.

Copyright© 2018 National Society of Professional Engineers, American Council of Engineering Companies, and American Society of Civil Engineers. All rights reserved.

1. The Contractor and Surety, jointly and severally, bind themselves, their heirs, executors, administrators, successors, and assigns to the Owner for the performance of the Construction Contract, which is incorporated herein by reference.
2. If the Contractor performs the Construction Contract, the Surety and the Contractor shall have no obligation under this Bond, except when applicable to participate in a conference as provided in Paragraph 3.
3. If there is no Owner Default under the Construction Contract, the Surety's obligation under this Bond will arise after:
   3.1. The Owner first provides notice to the Contractor and the Surety that the Owner is considering declaring a Contractor Default. Such notice may indicate whether the Owner is requesting a conference among the Owner, Contractor, and Surety to discuss the Contractor's performance. If the Owner does not request a conference, the Surety may, within five (5) business days after receipt of the Owner's notice, request such a conference. If the Surety timely requests a conference, the Owner shall attend. Unless the Owner agrees otherwise, any conference requested under this Paragraph 3.1 will be held within ten (10) business days of the Surety's receipt of the Owner's notice. If the Owner, the Contractor, and the Surety agree, the Contractor shall be allowed a reasonable time to perform the Construction Contract, but such an agreement does not waive the Owner's right, if any, subsequently to declare a Contractor Default;
   3.2. The Owner declares a Contractor Default, terminates the Construction Contract and notifies the Surety; and
   3.3. The Owner has agreed to pay the Balance of the Contract Price in accordance with the terms of the Construction Contract to the Surety or to a contractor selected to perform the Construction Contract.
4. Failure on the part of the Owner to comply with the notice requirement in Paragraph 3.1 does not constitute a failure to comply with a condition precedent to the Surety's obligations, or release the Surety from its obligations, except to the extent the Surety demonstrates actual prejudice.
5. When the Owner has satisfied the conditions of Paragraph 3, the Surety shall promptly and at the Surety's expense take one of the following actions:
   5.1. Arrange for the Contractor, with the consent of the Owner, to perform and complete the Construction Contract;
   5.2. Undertake to perform and complete the Construction Contract itself, through its agents or independent contractors;
   5.3. Obtain bids or negotiated proposals from qualified contractors acceptable to the Owner for a contract for performance and completion of the Construction Contract, arrange for a contract to be prepared for execution by the Owner and a contractor selected with the Owners concurrence, to be secured with performance and payment bonds executed by a qualified surety equivalent to the bonds issued on the Construction Contract, and pay to the Owner the amount of damages as described in Paragraph 7 in excess of the Balance of the Contract Price incurred by the Owner as a result of the Contractor Default; or
   5.4. Waive its right to perform and complete, arrange for completion, or obtain a new contractor, and with reasonable promptness under the circumstances:

Copyright© 2018 National Society of Professional Engineers, American Council of Engineering Companies, and American Society of Civil Engineers. All rights reserved.

5.4.1 After investigation, determine the amount for which it may be liable to the Owner and, as soon as practicable after the amount is determined, make payment to the Owner; or

5.4.2 Deny liability in whole or in part and notify the Owner, citing the reasons for denial.

6. If the Surety does not proceed as provided in Paragraph 5 with reasonable promptness, the Surety shall be deemed to be in default on this Bond seven days after receipt of an additional written notice from the Owner to the Surety demanding that the Surety perform its obligations under this Bond, and the Owner shall be entitled to enforce any remedy available to the Owner. If the Surety proceeds as provided in Paragraph 5.4, and the Owner refuses the payment, or the Surety has denied liability, in whole or in part, without further notice, the Owner shall be entitled to enforce any remedy available to the Owner.

7. If the Surety elects to act under Paragraph 5.1, 5.2, or 5.3, then the responsibilities of the Surety to the Owner will not be greater than those of the Contractor under the Construction Contract, and the responsibilities of the Owner to the Surety will not be greater than those of the Owner under the Construction Contract. Subject to the commitment by the Owner to pay the Balance of the Contract Price, the Surety is obligated, without duplication for:

   7.1. the responsibilities of the Contractor for correction of defective work and completion of the Construction Contract;

   7.2. additional legal, design professional, and delay costs resulting from the Contractor's Default, and resulting from the actions or failure to act of the Surety under Paragraph 5; and

   7.3. liquidated damages, or if no liquidated damages are specified in the Construction Contract, actual damages caused by delayed performance or non-performance of the Contractor.

8. If the Surety elects to act under Paragraph 5.1, 5.3, or 5.4, the Surety's liability is limited to the amount of this Bond.

9. The Surety shall not be liable to the Owner or others for obligations of the Contractor that are unrelated to the Construction Contract, and the Balance of the Contract Price will not be reduced or set off on account of any such unrelated obligations. No right of action will accrue on this Bond to any person or entity other than the Owner or its heirs, executors, administrators, successors, and assigns.

10. The Surety hereby waives notice of any change, including changes of time, to the Construction Contract or to related subcontracts, purchase orders, and other obligations.

11. Any proceeding, legal or equitable, under this Bond must be instituted in any court of competent jurisdiction in the location in which the work or part of the work is located and must be instituted within two years after a declaration of Contractor Default or within two years after the Contractor ceased working or within two years after the Surety refuses or fails to perform its obligations under this Bond, whichever occurs first. If the provisions of this paragraph are void or prohibited by law, the minimum periods of limitations available to sureties as a defense in the jurisdiction of the suit will be applicable.

12. Notice to the Surety, the Owner, or the Contractor must be mailed or delivered to the address shown on the page on which their signature appears.

13. When this Bond has been furnished to comply with a statutory or other legal requirement in the location where the construction was to be performed, any provision in this Bond conflicting with said statutory or legal requirement will be deemed deleted therefrom and provisions conforming to such

Copyright© 2018 National Society of Professional Engineers, American Council of Engineering Companies, and American Society of Civil Engineers. All rights reserved.

DocuSign Envelope ID: D92FB7CA-DD9A-40FF-B59F-20FB66385E4F

statutory or other legal requirement will be deemed incorporated herein. When so furnished, the intent is that this Bond will be construed as a statutory bond and not as a common law bond.

14. Definitions

    14.1. *Balance of the Contract Price*—The total amount payable by the Owner to the Contractor under the Construction Contract after all proper adjustments have been made including allowance for the Contractor for any amounts received or to be received by the Owner in settlement of insurance or other claims for damages to which the Contractor is entitled, reduced by all valid and proper payments made to or on behalf of the Contractor under the Construction Contract.

    14.2. *Construction Contract*—The agreement between the Owner and Contractor identified on the cover page, including all Contract Documents and changes made to the agreement and the Contract Documents.

    14.3. *Contractor Default*—Failure of the Contractor, which has not been remedied or waived, to perform or otherwise to comply with a material term of the Construction Contract.

    14.4. *Owner Default*—Failure of the Owner, which has not been remedied or waived, to pay the Contractor as required under the Construction Contract or to perform and complete or comply with the other material terms of the Construction Contract.

    14.5. *Contract Documents*—All the documents that comprise the agreement between the Owner and Contractor.

15. If this Bond is issued for an agreement between a contractor and subcontractor, the term Contractor in this Bond will be deemed to be Subcontractor and the term Owner will be deemed to be Contractor.

16. Modifications to this Bond are as follows: **[Describe modification or enter "None"]**

Copyright© 2018 National Society of Professional Engineers, American Council of Engineering Companies, and American Society of Civil Engineers. All rights reserved.

WARRANTY BOND

Contractor	**Surety**
Name: Address *(principal place of business)*:	Name: Address *(principal place of business)*:
Owner Name: **City of Sweet Home, Oregon** Address *(principal place of business)*: **3225 Main Street** **Sweet Home, OR 97386**	**Construction Contract** Description *(name and location)*: **Mahler WRF Improvements, Phase 1** **1357 Pleasant Valley Road** **Sweet Home, OR 97386** Contract Price: Effective Date of Contract: Contract's Date of Substantial Completion:
Bond Bond Amount: _____ Date of Bond: _____ Modifications to this Bond form: ☐ None ☐ See Paragraph 9	Bond Period: Commencing 364 days after Substantial Completion of the Work under the Construction Contract, and continuing until 3 years after such Substantial Completion.

Surety and Contractor, intending to be legally bound hereby, subject to the terms set forth herein, do each cause this Warranty Bond to be duly executed by an authorized officer, agent, or representative.

Contractor as Principal	Surety
_____ *(Full formal name of Contractor)*	_____ *(Full formal name of Surety) (corporate seal)*
By: _____ *(Signature)*	By: _____ *(Signature) (Attach Power of Attorney)*
Name: _____ *(Printed or typed)*	Name: _____ *(Printed or typed)*
Title: _____	Title: _____
Attest: _____ *(Signature)*	Attest: _____ *(Signature)*
Name: _____ *(Printed or typed)*	Name: _____ *(Printed or typed)*
Title:	Title:

Notes: (1) Provide supplemental execution by any additional parties, such as joint venturers. (2) Any singular reference to Contractor, Surety, Owner, or other party is considered plural where applicable.

Copyright© 2018 National Society of Professional Engineers, American Council of Engineering Companies, and American Society of Civil Engineers. All rights reserved.

1. The Contractor and Surety, jointly and severally, bind themselves, their heirs, executors, administrators, successors, and assigns to the Owner for the performance of the Construction Contract's Correction Period Obligations. The Construction Contract is incorporated herein by reference.
2. If the Contractor performs the Correction Period Obligations, the Surety and the Contractor shall have no obligation under this Warranty Bond.
3. If Owner gives written notice to Contractor and Surety during the Bond Period of Contractor's obligation under the Correction Period Obligations, and Contractor does not fulfill such obligation, then Surety shall be responsible for fulfillment of such Correction Period Obligations. Surety shall either fulfill the Correction Period Obligations itself, through its agents or contractors, or, in the alternative, Surety may waive the right to fulfill the Correction Period Obligations itself, and reimburse the Owner for all resulting costs incurred by Owner in performing Contractor's Correction Period Obligations, including but not limited to correction, removal, replacement, and repair costs.
4. The Surety's liability is limited to the amount of this Warranty Bond. Renewal or continuation of the Warranty Bond will not modify such amount, unless expressly agreed to by Surety in writing.
5. The Surety shall have no liability under this Warranty Bond for obligations of the Contractor that are unrelated to the Construction Contract. No right of action will accrue on this Warranty Bond to any person or entity other than the Owner or its heirs, executors, administrators, successors, and assigns.
6. Any proceeding, legal or equitable, under this Warranty Bond may be instituted in any court of competent jurisdiction in the location in which the Work or part of the Work is located and must be instituted within two years after the Surety refuses or fails to perform its obligations under this Warranty Bond.
7. Written notice to the Surety, the Owner, or the Contractor must be mailed or delivered to the address shown in this Warranty Bond.
8. Definitions

   8.1. *Construction Contract*—The agreement between the Owner and Contractor identified on the cover page of this Warranty Bond, including all Contract Documents and changes made to the agreement and the Contract Documents.

   8.2. *Contract Documents*—All the documents that comprise the agreement between the Owner and Contractor.

   8.3. *Correction Period Obligations*—The duties, responsibilities, commitments, and obligations of the Contractor with respect to correction or replacement of defective Work, as set forth in the Construction Contract's Correction Period clause, Section 00 70 00, Standard General Conditions of the Construction Contract (2018), Paragraph 15.08, as duly modified.

   8.4. *Substantial Completion*—As defined in the Construction Contract.

   8.5. *Work*—As defined in the Construction Contract.
9. Modifications to this Bond are as follows: **[Describe modification or enter "None"]**

Copyright© 2018 National Society of Professional Engineers, American Council of Engineering Companies, and American Society of Civil Engineers. All rights reserved.

DocuSign Envelope ID: D92FB7CA-DD9A-40FF-B59F-20FB66385E4F

PAYMENT BOND

Contractor	**Surety**
Name: Address *(principal place of business)*:	Name: Address *(principal place of business)*:
Owner Name: City of Sweet Home, Oregon Mailing address *(principal place of business)*: 3225 Main Street Sweet Home, OR 97386	**Contract** Description *(name and location)*: Mahler WRF Improvements, Phase 1 1357 Pleasant Valley Road Sweet Home, OR 97386 Contract Price: Effective Date of Contract:

Bond

Bond Amount:

Date of Bond:

(Date of Bond cannot be earlier than Effective Date of Contract)

Modifications to this Bond form:

☐ None ☐ See Paragraph 18

Surety and Contractor, intending to be legally bound hereby, subject to the terms set forth in this Payment Bond, do each cause this Payment Bond to be duly executed by an authorized officer, agent, or representative.

Contractor as Principal	Surety
_____ *(Full formal name of Contractor)*	_____ *(Full formal name of Surety) (corporate seal)*
By: _____ *(Signature)*	By: _____ *(Signature)(Attach Power of Attorney)*
Name: _____ *(Printed or typed)*	Name: _____ *(Printed or typed)*
Title: _____	Title: _____
Attest: _____ *(Signature)*	Attest: _____ *(Signature)*
Name: _____ *(Printed or typed)*	Name: _____ *(Printed or typed)*
Title: _____	Title: _____

Notes: (1) Provide supplemental execution by any additional parties, such as joint venturers. (2) Any singular reference to Contractor, Surety, Owner, or other party is considered plural where applicable.

Copyright© 2018 National Society of Professional Engineers, American Council of Engineering Companies, and American Society of Civil Engineers. All rights reserved.

DocuSign Envelope ID: D92FB7CA-DD9A-40FF-B59F-20FB66385E4F

1. The Contractor and Surety, jointly and severally, bind themselves, their heirs, executors, administrators, successors, and assigns to the Owner to pay for labor, materials, and equipment furnished for use in the performance of the Construction Contract, which is incorporated herein by reference, subject to the following terms.
2. If the Contractor promptly makes payment of all sums due to Claimants, and defends, indemnifies, and holds harmless the Owner from claims, demands, liens, or suits by any person or entity seeking payment for labor, materials, or equipment furnished for use in the performance of the Construction Contract, then the Surety and the Contractor shall have no obligation under this Bond.
3. If there is no Owner Default under the Construction Contract, the Surety's obligation to the Owner under this Bond will arise after the Owner has promptly notified the Contractor and the Surety (at the address described in Paragraph 13) of claims, demands, liens, or suits against the Owner or the Owner's property by any person or entity seeking payment for labor, materials, or equipment furnished for use in the performance of the Construction Contract, and tendered defense of such claims, demands, liens, or suits to the Contractor and the Surety.
4. When the Owner has satisfied the conditions in Paragraph 3, the Surety shall promptly and at the Surety's expense defend, indemnify, and hold harmless the Owner against a duly tendered claim, demand, lien, or suit.
5. The Surety's obligations to a Claimant under this Bond will arise after the following:

    5.1. Claimants who do not have a direct contract with the Contractor

    5.1.1. have furnished a written notice of non-payment to the Contractor, stating with substantial accuracy the amount claimed and the name of the party to whom the materials were, or equipment was, furnished or supplied or for whom the labor was done or performed, within ninety (90) days after having last performed labor or last furnished materials or equipment included in the Claim; and

    5.1.2. have sent a Claim to the Surety (at the address described in Paragraph 13).

    5.2. Claimants who are employed by or have a direct contract with the Contractor have sent a Claim to the Surety (at the address described in Paragraph 13).

6. If a notice of non-payment required by Paragraph 5.1.1 is given by the Owner to the Contractor, that is sufficient to satisfy a Claimant's obligation to furnish a written notice of non-payment under Paragraph 5.1.1.
7. When a Claimant has satisfied the conditions of Paragraph 5.1 or 5.2, whichever is applicable, the Surety shall promptly and at the Surety's expense take the following actions:

    7.1. Send an answer to the Claimant, with a copy to the Owner, within sixty (60) days after receipt of the Claim, stating the amounts that are undisputed and the basis for challenging any amounts that are disputed; and

    7.2. Pay or arrange for payment of any undisputed amounts.

    7.3. The Surety's failure to discharge its obligations under Paragraph 7.1 or 7.2 will not be deemed to constitute a waiver of defenses the Surety or Contractor may have or acquire as to a Claim, except as to undisputed amounts for which the Surety and Claimant have reached agreement. If, however, the Surety fails to discharge its obligations under Paragraph 7.1 or 7.2, the Surety shall indemnify the Claimant for the reasonable attorney's fees the Claimant incurs thereafter to recover any sums found to be due and owing to the Claimant.

Copyright© 2018 National Society of Professional Engineers, American Council of Engineering Companies, and American Society of Civil Engineers. All rights reserved.

8. The Surety's total obligation will not exceed the amount of this Bond, plus the amount of reasonable attorney's fees provided under Paragraph 7.3, and the amount of this Bond will be credited for any payments made in good faith by the Surety.

9. Amounts owed by the Owner to the Contractor under the Construction Contract will be used for the performance of the Construction Contract and to satisfy claims, if any, under any construction performance bond. By the Contractor furnishing and the Owner accepting this Bond, they agree that all funds earned by the Contractor in the performance of the Construction Contract are dedicated to satisfying obligations of the Contractor and Surety under this Bond, subject to the Owner's priority to use the funds for the completion of the work.

10. The Surety shall not be liable to the Owner, Claimants, or others for obligations of the Contractor that are unrelated to the Construction Contract. The Owner shall not be liable for the payment of any costs or expenses of any Claimant under this Bond, and shall have under this Bond no obligation to make payments to or give notice on behalf of Claimants, or otherwise have any obligations to Claimants under this Bond.

11. The Surety hereby waives notice of any change, including changes of time, to the Construction Contract or to related subcontracts, purchase orders, and other obligations.

12. No suit or action will be commenced by a Claimant under this Bond other than in a court of competent jurisdiction in the state in which the project that is the subject of the Construction Contract is located or after the expiration of one year from the date (1) on which the Claimant sent a Claim to the Surety pursuant to Paragraph 5.1.2 or 5.2, or (2) on which the last labor or service was performed by anyone or the last materials or equipment were furnished by anyone under the Construction Contract, whichever of (1) or (2) first occurs. If the provisions of this paragraph are void or prohibited by law, the minimum period of limitation available to sureties as a defense in the jurisdiction of the suit will be applicable.

13. Notice and Claims to the Surety, the Owner, or the Contractor must be mailed or delivered to the address shown on the page on which their signature appears. Actual receipt of notice or Claims, however accomplished, will be sufficient compliance as of the date received.

14. When this Bond has been furnished to comply with a statutory or other legal requirement in the location where the construction was to be performed, any provision in this Bond conflicting with said statutory or legal requirement will be deemed deleted here from and provisions conforming to such statutory or other legal requirement will be deemed incorporated herein. When so furnished, the intent is that this Bond will be construed as a statutory bond and not as a common law bond.

15. Upon requests by any person or entity appearing to be a potential beneficiary of this Bond, the Contractor and Owner shall promptly furnish a copy of this Bond or shall permit a copy to be made.

16. Definitions

    16.1. *Claim*—A written statement by the Claimant including at a minimum:

        16.1.1. The name of the Claimant;

        16.1.2. The name of the person for whom the labor was done, or materials or equipment furnished;

        16.1.3. A copy of the agreement or purchase order pursuant to which labor, materials, or equipment was furnished for use in the performance of the Construction Contract;

        16.1.4. A brief description of the labor, materials, or equipment furnished;

Copyright© 2018 National Society of Professional Engineers, American Council of Engineering Companies, and American Society of Civil Engineers. All rights reserved.

DocuSign Envelope ID: D92FB7CA-DD9A-40FF-B59F-20FB66385E4F

16.1.5. The date on which the Claimant last performed labor or last furnished materials or equipment for use in the performance of the Construction Contract;

16.1.6. The total amount earned by the Claimant for labor, materials, or equipment furnished as of the date of the Claim;

16.1.7. The total amount of previous payments received by the Claimant; and

16.1.8. The total amount due and unpaid to the Claimant for labor, materials, or equipment furnished as of the date of the Claim.

16.2. *Claimant*—An individual or entity having a direct contract with the Contractor or with a subcontractor of the Contractor to furnish labor, materials, or equipment for use in the performance of the Construction Contract. The term Claimant also includes any individual or entity that has rightfully asserted a claim under an applicable mechanic's lien or similar statute against the real property upon which the Project is located. The intent of this Bond is to include without limitation in the terms of "labor, materials, or equipment" that part of the water, gas, power, light, heat, oil, gasoline, telephone service, or rental equipment used in the Construction Contract, architectural and engineering services required for performance of the work of the Contractor and the Contractor's subcontractors, and all other items for which a mechanic's lien may be asserted in the jurisdiction where the labor, materials, or equipment were furnished.

16.3. *Construction Contract*—The agreement between the Owner and Contractor identified on the cover page, including all Contract Documents and all changes made to the agreement and the Contract Documents.

16.4. *Owner Default*—Failure of the Owner, which has not been remedied or waived, to pay the Contractor as required under the Construction Contract or to perform and complete or comply with the other material terms of the Construction Contract.

16.5. *Contract Documents*—All the documents that comprise the agreement between the Owner and Contractor.

17. If this Bond is issued for an agreement between a contractor and subcontractor, the term Contractor in this Bond will be deemed to be Subcontractor and the term Owner will be deemed to be Contractor.

18. Modifications to this Bond are as follows: **[Describe modification or enter "None"]**

Copyright© 2018 National Society of Professional Engineers, American Council of Engineering Companies, and American Society of Civil Engineers. All rights reserved.

DocuSign Envelope ID: D92FB7CA-DD9A-40FF-B59F-20FB66385E4F

STANDARD GENERAL CONDITIONS OF THE CONSTRUCTION CONTRACT

TABLE OF CONTENTS

Page

Article 1—Definitions and Terminology 1
- 1.01 Defined Terms 1
- 1.02 Defined Terms Related to American Iron and Steel 6
- 1.03 Terminology 9

Article 2—Preliminary Matters 10
- 2.01 Delivery of Performance and Payment Bonds; Evidence of Insurance 10
- 2.02 Copies of Documents 11
- 2.03 Before Starting Construction 11
- 2.04 Preconstruction Conference; Designation of Authorized Representatives 11
- 2.05 Acceptance of Schedules 12
- 2.06 Electronic Transmittals 12

Article 3—Contract Documents: Intent, Requirements, Reuse 16
- 3.01 Intent 16
- 3.02 Reference Standards 17
- 3.03 Reporting and Resolving Discrepancies 17
- 3.04 Requirements of the Contract Documents 18
- 3.05 Reuse of Documents 18
- 3.06 Order of Precedence of Contract Documents 19
- 3.07 American Iron and Steel (AIS) Requirements 19

Article 4—Commencement and Progress of the Work 20
- 4.01 Commencement of Contract Times; Notice to Proceed 20
- 4.02 Starting the Work 20
- 4.03 Reference Points 20
- 4.04 Progress Schedule 20
- 4.05 Delays in Contractor's Progress 21

Article 5—Site; Subsurface and Physical Conditions; Hazardous Environmental Conditions 24
- 5.01 Availability of Lands 24
- 5.02 Use of Site and Other Areas 24
- 5.03 Subsurface and Physical Conditions 25
- 5.04 Differing Subsurface or Physical Conditions 26
- 5.05 Underground Facilities 27
- 5.06 Hazardous Environmental Conditions at Site 29

Copyright© 2018 National Society of Professional Engineers, American Council of Engineering Companies, and American Society of Civil Engineers. All rights reserved.

DocuSign Envelope ID: D92FB7CA-DD9A-40FF-B59F-20FB66385E4F

Article 6—Bonds and Insurance 32
6.01 Performance, Payment, and Other Bonds 32
6.02 Insurance—General Provisions 33
6.03 Contractor's Insurance 35
6.04 Builder's Risk and Other Property Insurance 38
6.05 Property Losses; Subrogation 40
6.06 Receipt and Application of Property Insurance Proceeds 41
Article 7—Contractor's Responsibilities 42
7.01 Contractor's Means and Methods of Construction 42
7.02 Supervision and Superintendence 42
7.03 Labor; Working Hours 42
7.04 Services, Materials, and Equipment 43
7.05 "Or Equals" 43
7.06 Substitutes 44
7.07 Concerning Subcontractors and Suppliers 46
7.08 Patent Fees and Royalties 48
7.09 Permits 48
7.10 Taxes 48
7.11 Laws and Regulations 48
7.12 Record Documents 51
7.13 Safety and Protection 51
7.14 Hazard Communication Programs 53
7.15 Emergencies 53
7.16 Submittals 53
7.17 Contractor's General Warranty and Guarantee 56
7.18 Indemnification 57
7.19 Delegation of Professional Design Services 57
Article 8—Other Work at the Site 58
8.01 Other Work 58
8.02 Coordination 59
8.03 Legal Relationships 59
Article 9—Owner's Responsibilities 60
9.01 Communications to Contractor 60
9.02 Replacement of Engineer 61
9.03 Furnish Data 61
9.04 Pay When Due 61
9.05 Lands and Easements; Reports, Tests, and Drawings 61

Copyright© 2018 National Society of Professional Engineers, American Council of Engineering Companies, and American Society of Civil Engineers. All rights reserved.

DocuSign Envelope ID: D92FB7CA-DD9A-40FF-B59F-20FB66385E4F

9.06 Insurance 61
9.07 Change Orders 61
9.08 Inspections, Tests, and Approvals 61
9.09 Limitations on Owner's Responsibilities 61
9.10 Undisclosed Hazardous Environmental Condition 61
9.11 Evidence of Financial Arrangements 61
9.12 Safety Programs 62
9.13 Owner's Site Representative 62
Article 10—Engineer's Status During Construction 62
10.01 Owner's Representative 62
10.02 Visits to Site 62
10.03 Resident Project Representative 62
10.04 Engineer's Authority 64
10.05 Determinations for Unit Price Work 64
10.06 Decisions on Requirements of Contract Documents and Acceptability of Work 64
10.07 Limitations on Engineer's Authority and Responsibilities 64
10.08 Compliance with Safety Program 65
Article 11—Changes to the Contract 65
11.01 Amending and Supplementing the Contract 65
11.02 Change Orders 65
11.03 Work Change Directives 66
11.04 Field Orders 66
11.05 Owner-Authorized Changes in the Work 66
11.06 Unauthorized Changes in the Work 67
11.07 Change of Contract Price 67
11.08 Change of Contract Times 68
11.09 Change Proposals 68
11.10 Notification to Surety 69
Article 12—Claims 70
12.01 Claims 70
Article 13—Cost of the Work; Allowances; Unit Price Work 71
13.01 Cost of the Work 71
13.02 Allowances 74
13.03 Unit Price Work 75

Copyright© 2018 National Society of Professional Engineers, American Council of Engineering Companies, and American Society of Civil Engineers. All rights reserved.

DocuSign Envelope ID: D92FB7CA-DD9A-40FF-B59F-20FB66385E4F

Article 14—Tests and Inspections; Correction, Removal, or Acceptance of Defective Work 76
14.01 Access to Work 76
14.02 Tests, Inspections, and Approvals 76
14.03 Defective Work 77
14.04 Acceptance of Defective Work 77
14.05 Uncovering Work 77
14.06 Owner May Stop the Work 78
14.07 Owner May Correct Defective Work 78
Article 15—Payments to Contractor; Set-Offs; Completion; Correction Period 79
15.01 Progress Payments 79
15.02 Contractor's Warranty of Title 82
15.03 Substantial Completion 82
15.04 Partial Use or Occupancy 83
15.05 Final Inspection 84
15.06 Final Payment 84
15.07 Waiver of Claims 85
15.08 Correction Period 86
Article 16—Suspension of Work and Termination 87
16.01 Owner May Suspend Work 87
16.02 Owner May Terminate for Cause 87
16.03 Owner May Terminate for Convenience 88
16.04 Contractor May Stop Work or Terminate 88
Article 17—Final Resolution of Disputes 89
17.01 Methods and Procedures 89
Article 18—Miscellaneous 89
18.01 Giving Notice 89
18.02 Computation of Times 89
18.03 Cumulative Remedies 90
18.04 Limitation of Damages 90
18.05 No Waiver 90
18.06 Survival of Obligations 90
18.07 Controlling Law 90
18.08 Assignment of Contract 90
18.09 Successors and Assigns 90
18.10 Headings 90
18.11 Severability 91

Copyright© 2018 National Society of Professional Engineers, American Council of Engineering Companies, and American Society of Civil Engineers. All rights reserved.

STANDARD GENERAL CONDITIONS OF THE CONSTRUCTION CONTRACT

ARTICLE 1—DEFINITIONS AND TERMINOLOGY

1.01 Defined Terms

A. Wherever used in the Bidding Requirements or Contract Documents, a term printed with initial capital letters, including the term's singular and plural forms, will have the meaning indicated in the definitions below. In addition to terms specifically defined, terms with initial capital letters in the Contract Documents include references to identified articles and paragraphs, and the titles of other documents or forms.

1. *Addenda*—Written or graphic instruments issued prior to the opening of Bids which clarify, correct, or change the Bidding Requirements or the proposed Contract Documents.

2. *Agreement*—The written instrument, executed by Owner and Contractor, that sets forth the Contract Price and Contract Times, identifies the parties and the Engineer, and designates the specific items that are Contract Documents.

3. *Application for Payment*—The document prepared by Contractor, in a form acceptable to Engineer, to request progress or final payments, and which is to be accompanied by such supporting documentation as is required by the Contract Documents.

4. *Bid*—The offer of a Bidder submitted on the prescribed form setting forth the prices for the Work to be performed.

5. *Bid Bond* – The security to be furnished by the Bidder on the form furnished as a guarantee of good faith to enter into a contract for the Work contemplated if it be awarded to the Bidder.

6. *Bidder*—An individual or entity that submits a Bid to Owner.

7. *Bidding Documents*—The Bidding Requirements, the proposed Contract Documents, and all Addenda.

8. *Bidding Requirements*—The Advertisement or invitation to bid, Instructions to Bidders, Bid Bond or other Bid security, if any, the Bid Form, and the Bid with any attachments.

9. *Change Order*—A document which is signed by Contractor and Owner and authorizes an addition, deletion, or revision in the Work or an adjustment in the Contract Price or the Contract Times, or other revision to the Contract, issued on or after the Effective Date of the Contract.

10. *Change Proposal*—A written request by Contractor, duly submitted in compliance with the procedural requirements set forth herein, seeking an adjustment in Contract Price or Contract Times; contesting an initial decision by Engineer concerning the requirements of the Contract Documents or the acceptability of Work under the Contract Documents; challenging a set-off against payments due; or seeking other relief with respect to the terms of the Contract.

Copyright© 2018 National Society of Professional Engineers, American Council of Engineering Companies, and American Society of Civil Engineers. All rights reserved.

DocuSign Envelope ID: D92FB7CA-DD9A-40FF-B59F-20FB66385E4F

11. *Claim*

    a. A demand or assertion by Owner directly to Contractor, duly submitted in compliance with the procedural requirements set forth herein, seeking an adjustment of Contract Price or Contract Times; contesting an initial decision by Engineer concerning the requirements of the Contract Documents or the acceptability of Work under the Contract Documents; contesting Engineer's decision regarding a Change Proposal; seeking resolution of a contractual issue that Engineer has declined to address; or seeking other relief with respect to the terms of the Contract.

    b. A demand or assertion by Contractor directly to Owner, duly submitted in compliance with the procedural requirements set forth herein, contesting Engineer's decision regarding a Change Proposal, or seeking resolution of a contractual issue that Engineer has declined to address.

    c. A demand or assertion by Owner or Contractor, duly submitted in compliance with the procedural requirements set forth herein, made pursuant to Paragraph 12.01.A.4, concerning disputes arising after Engineer has issued a recommendation of final payment.

    d. A demand for money or services by a third party is not a Claim.

12. *Constituent of Concern*—Asbestos, petroleum, radioactive materials, polychlorinated biphenyls (PCBs), lead-based paint (as defined by the HUD/EPA standard), hazardous waste, and any substance, product, waste, or other material of any nature whatsoever that is or becomes listed, regulated, or addressed pursuant to Laws and Regulations regulating, relating to, or imposing liability or standards of conduct concerning, any hazardous, toxic, or dangerous waste, substance, or material.

13. *Contract*—The entire and integrated written contract between Owner and Contractor concerning the Work.

14. *Contract Documents*—Those items so designated in the Agreement, and which together comprise the Contract.

15. *Contract Price*—The money that Owner has agreed to pay Contractor for completion of the Work in accordance with the Contract Documents.

16. *Contract Times*—The number of days or the dates by which Contractor shall: (a) achieve Milestones, if any; (b) achieve Substantial Completion; and (c) complete the Work.

17. *Contractor*—The individual or entity with which Owner has contracted for performance of the Work.

18. *Cost of the Work*—See Paragraph 13.01 for definition.

19. *Drawings*—The part of the Contract that graphically shows the scope, extent, and character of the Work to be performed by Contractor.

20. Drawings of Record - Those drawings made or revised by the Contractor during progress of construction and approved by the owner or the Design Professional, illustrating how various elements of the work were actually installed.

21. *Effective Date of the Contract*—The date, indicated in the Agreement, on which the Contract becomes effective.

Copyright© 2018 National Society of Professional Engineers, American Council of Engineering Companies, and American Society of Civil Engineers. All rights reserved.

22. *Electronic Document*—Any Project-related correspondence, attachments to correspondence, data, documents, drawings, information, or graphics, including but not limited to Shop Drawings and other Submittals, that are in an electronic or digital format.

23. *Electronic Means*—Electronic mail (email), upload/download from a secure Project website, or other communications methods that allow: (a) the transmission or communication of Electronic Documents; (b) the documentation of transmissions, including sending and receipt; (c) printing of the transmitted Electronic Document by the recipient; (d) the storage and archiving of the Electronic Document by sender and recipient; and (e) the use by recipient of the Electronic Document for purposes permitted by this Contract. Electronic Means does not include the use of text messaging, or of Facebook, Twitter, Instagram, or similar social media services for transmission of Electronic Documents.

24. *Engineer*—The Engineer as specified in the Agreement is West Yost Associates Inc.

25. *Field Order*—A written order issued by Engineer which requires minor changes in the Work but does not change the Contract Price or the Contract Times.

26. *Final Completion*—The completion of all of the Work called for under the Contract including but not limited to, if applicable, satisfactory operation of all equipment, by means of acceptance tests, correction of all punch list items to the satisfaction of the Owner and the Design Professional, settlement of all claims, if any, payment and release of records of all construction and like liens, delivery of all guarantees, equipment operation and maintenance manuals, as-built drawings, building certificate required prior to occupancy, electrical certificates, mechanical certificates, plumbing certificates, all other required approvals and acceptances by city, county and state governments, or other authority having jurisdiction, and removal of all rubbish, tools, scaffolding and surplus materials and equipment from the job site.

27. *Hazardous Environmental Condition*—The presence at the Site of Constituents of Concern in such quantities or circumstances that may present a danger to persons or property exposed thereto.

    a. The presence at the Site of materials that are necessary for the execution of the Work, or that are to be incorporated into the Work, and that are controlled and contained pursuant to industry practices, Laws and Regulations, and the requirements of the Contract, is not a Hazardous Environmental Condition.

    b. The presence of Constituents of Concern that are to be removed or remediated as part of the Work is not a Hazardous Environmental Condition.

    c. The presence of Constituents of Concern as part of the routine, anticipated, and obvious working conditions at the Site, is not a Hazardous Environmental Condition.

28. *Laws and Regulations; Laws or Regulations*—Any and all applicable laws, statutes, rules, regulations, ordinances, codes, and binding decrees, resolutions, and orders of any and all governmental bodies, agencies, authorities, and courts having jurisdiction.

29. *Liens*—Charges, security interests, or encumbrances upon Contract-related funds, real property, or personal property.

Copyright© 2018 National Society of Professional Engineers, American Council of Engineering Companies, and American Society of Civil Engineers. All rights reserved.

30. *Milestone*—A principal event in the performance of the Work that the Contract requires Contractor to achieve by an intermediate completion date, or by a time prior to Substantial Completion of all the Work.

31. *Notice of Award*—The written notice by Owner to a Bidder of Owner's acceptance of the Bid.

32. *Notice to Proceed*—A written notice by Owner to Contractor fixing the date on which the Contract Times will commence to run and on which Contractor shall start to perform the Work.

33. *Owner*—The individual or entity with which Contractor has contracted regarding the Work, and which has agreed to pay Contractor for the performance of the Work, pursuant to the terms of the Contract. The Owner shall be the City of Sweet Home, Oregon.

34. *Payment Bond* – The form of security approved by the OWNER and furnished by the CONTRACTOR and CONTRACTOR'S Surety guaranteeing payment for all labor, materials, services, and equipment furnished for use by the CONTRACTOR in performance of the Contract.

35. *Performance Bond* – The form of security approved by the OWNER and furnished by the CONTRACTOR and CONTRACTOR'S Surety guaranteeing the complete and faithful performance of all the obligations and conditions placed upon the CONTRACTOR by the Contract.

36. *Progress Schedule*—A schedule, prepared and maintained by Contractor, describing the sequence and duration of the activities comprising Contractor's plan to accomplish the Work within the Contract Times.

37. *Project*—The total undertaking to be accomplished for Owner by engineers, contractors, and others, including planning, study, design, construction, testing, commissioning, and start-up, and of which the Work to be performed under the Contract Documents is a part.

38. *Punch List*—List of incomplete items of work and of items of work which are not in conformance with the contract. The list will be prepared by the ENGINEER when the CONTRACTOR:

    a. Notifies the ENGINEER in writing that the work has been completed in accordance with the contract;

    b. Requests in writing that the OWNER accept the work.

39. *Resident Project Representative (RPR)*—The authorized representative of Engineer assigned to assist Engineer at the Site. As used herein, the term Resident Project Representative (RPR) includes any assistants or field staff of Resident Project Representative.

40. *Samples*—Physical examples of materials, equipment, or workmanship that are representative of some portion of the Work and that establish the standards by which such portion of the Work will be judged.

41. *Schedule of Submittals*—A schedule, prepared and maintained by Contractor, of required submittals and the time requirements for Engineer's review of the submittals.

Copyright© 2018 National Society of Professional Engineers, American Council of Engineering Companies, and American Society of Civil Engineers. All rights reserved.

42. *Schedule of Values*—A schedule, prepared and maintained by Contractor, allocating portions of the Contract Price to various portions of the Work and used as the basis for reviewing Contractor's Applications for Payment.

43. *Severability*—A contract provision stating that if any provision of the contract is deemed illegal, invalid or otherwise unenforceable, the remainder of the Contract shall remain valid.

44. *Shop Drawings*—All drawings, diagrams, illustrations, schedules, and other data or information that are specifically prepared or assembled by or for Contractor and submitted by Contractor to illustrate some portion of the Work. Shop Drawings, whether approved or not, are not Drawings and are not Contract Documents.

45. *Site*—Lands or areas indicated in the Contract Documents as being furnished by Owner upon which the Work is to be performed, including rights-of-way and easements, and such other lands or areas furnished by Owner which are designated for the use of Contractor.

46. *Specifications*—The part of the Contract that consists of written requirements for materials, equipment, systems, standards, and workmanship as applied to the Work, and certain administrative requirements and procedural matters applicable to the Work.

47. *Subcontractor*—An individual or entity having a direct contract with Contractor or with any other Subcontractor for the performance of a part of the Work.

48. *Submittal*—A written or graphic document, prepared by or for Contractor, which the Contract Documents require Contractor to submit to Engineer, or that is indicated as a Submittal in the Schedule of Submittals accepted by Engineer. Submittals may include Shop Drawings and Samples; schedules; product data; Owner-delegated designs; sustainable design information; information on special procedures; testing plans; results of tests and evaluations, source quality-control testing and inspections, and field or Site quality-control testing and inspections; warranties and certifications; Suppliers' instructions and reports; records of delivery of spare parts and tools; operations and maintenance data; Project photographic documentation; record documents; and other such documents required by the Contract Documents. Submittals, whether or not approved or accepted by Engineer, are not Contract Documents. Change Proposals, Change Orders, Claims, notices, Applications for Payment, and requests for interpretation or clarification are not Submittals.

49. *Substantial Completion*—The time at which the Work (or a specified part thereof) has progressed to the point where, in the opinion of Engineer, the Work (or a specified part thereof) is sufficiently complete, in accordance with the Contract Documents, so that the Work (or a specified part thereof) can be utilized for the purposes for which it is intended. The terms "substantially complete" and "substantially completed" as applied to all or part of the Work refer to Substantial Completion of such Work.

50. *Successful Bidder*—The Bidder to which the Owner makes an award of contract.

51. *Supplier*—A manufacturer, fabricator, supplier, distributor, or vendor having a direct contract with Contractor or with any Subcontractor to furnish materials or equipment to be incorporated in the Work by Contractor or a Subcontractor.

Copyright© 2018 National Society of Professional Engineers, American Council of Engineering Companies, and American Society of Civil Engineers. All rights reserved.

52. *Technical Data*

    a. Those items expressly identified as Technical Data in the General Conditions, with respect to either (1) existing subsurface conditions at or adjacent to the Site, or existing physical conditions at or adjacent to the Site including existing surface or subsurface structures (except Underground Facilities) or (2) Hazardous Environmental Conditions at the Site.

    b. If no such express identifications of Technical Data have been made with respect to conditions at the Site, then Technical Data is defined, with respect to conditions at the Site under Paragraphs 5.03, 5.04, and 5.06, as the data contained in boring logs, recorded measurements of subsurface water levels, assessments of the condition of subsurface facilities, laboratory test results, and other factual, objective information regarding conditions at the Site that are set forth in any geotechnical, environmental, or other Site or facilities conditions report prepared for the Project and made available to Contractor.

    c. Information and data regarding the presence or location of Underground Facilities are not intended to be categorized, identified, or defined as Technical Data, and instead Underground Facilities are shown or indicated on the Drawings.

53. *Underground Facilities*—All active or not-in-service underground lines, pipelines, conduits, ducts, encasements, cables, wires, manholes, vaults, tanks, tunnels, or other such facilities or systems at the Site, including but not limited to those facilities or systems that produce, transmit, distribute, or convey telephone or other communications, cable television, fiber optic transmissions, power, electricity, light, heat, gases, oil, crude oil products, liquid petroleum products, water, steam, waste, wastewater, storm water, other liquids or chemicals, or traffic or other control systems. An abandoned facility or system is not an Underground Facility.

54. *Unit Price Work*—Work to be paid for on the basis of unit prices.

55. *Work*—The entire construction or the various separately identifiable parts thereof required to be provided under the Contract Documents. Work includes and is the result of performing or providing all labor, services, and documentation necessary to produce such construction; furnishing, installing, and incorporating all materials and equipment into such construction; and may include related services such as testing, start-up, and commissioning, all as required by the Contract Documents.

56. *Work Change Directive*—A written directive to Contractor issued on or after the Effective Date of the Contract, signed by Owner and recommended by Engineer, ordering an addition, deletion, or revision in the Work.

1.02 Defined Terms Related to American Iron and Steel

A. American Iron and Steel (AIS) - Requirements mandated by Section 746 of Title VII of the Consolidated Appropriations Act of 2017 (Division A - Agriculture, Rural Development, Food and Drug Administration, and Related Agencies Appropriations Act, 2017) and subsequent statutes mandating domestic preference for "iron and steel products," meaning the following products, if made primarily of iron or steel: lined or unlined pipes and fittings, manhole covers and other municipal castings, hydrants, tanks, flanges, pipe clamps and restraints, valves, structural steel, reinforced precast concrete, and Construction Materials. AIS requirements

Copyright© 2018 National Society of Professional Engineers, American Council of Engineering Companies, and American Society of Civil Engineers. All rights reserved.

DocuSign Envelope ID: D92FB7CA-DD9A-40FF-B59F-20FB66385E4F

apply in each of the several states, the District of Columbia, and each federally recognized Tribe, but not the U.S. Territories.

B. Coating - A covering that is applied to the surface of an object. If a Coating is applied to the external surface of a domestic iron or Steel component, and the application takes place outside of the United States, said product would be considered a compliant product under the AIS requirements. Any Coating processes that are applied to the external surface of Iron and Steel components that would otherwise be AIS compliant would not disqualify the product from meeting the AIS requirements regardless of where the Coating processes occur, provided that final assembly of the product occurs in the United States. This exemption only applies to Coatings on the external surface of Iron and Steel components. It does not apply to Coatings or linings on internal surfaces of Iron and Steel products, such as the lining of lined pipes. All Manufacturing Processes for lined pipes, including the application of pipe lining, must occur in the United States for the product to be compliant with AIS requirements.

C. Construction Materials - Those articles, materials, or supplies made primarily of iron and/or steel, that are permanently incorporated into the project, not including mechanical and/or electrical components, equipment and systems. Some of these products may overlap with what is also considered “structural steel”. Note: Mechanical and electrical components, equipment and systems are not considered Construction Materials. See definitions of Mechanical Equipment and Electrical Equipment.

D. Contractor’s Certification - Documentation submitted by the Contractor upon Substantial Completion of the Contract that all Iron and Steel products installed were Produced in the United States.

E. De Minimis - Various miscellaneous, incidental low-cost components that are essential for, but incidental to, the construction and are incorporated into the physical structure of the project. Examples of De Minimis components could include small washers, screws, fasteners (such as “off the shelf” nuts and bolts), miscellaneous wire, corner bead, ancillary tube, signage, trash bins, door hardware etc. Costs for such De Minimis components cumulatively may comprise no more than a total of five percent of the total cost of the materials used in and incorporated into a project; the cost of an individual item may not exceed one percent of the total cost of the materials used in and incorporated into a project.

F. Electrical Equipment - Typically any machine powered by electricity and includes components that are part of the electrical distribution system. AIS does not apply to Electrical Equipment.

G. Engineer’s Certification - Documentation submitted by the Engineer that Drawings, Specifications, and Bidding Documents comply with AIS.

H. Iron and Steel products - The following products made primarily of iron or steel: lined or unlined pipes and fittings, manhole covers and other municipal castings, hydrants, tanks, flanges, pipe clamps and restraints, valves, structural steel, reinforced precast concrete, and Construction Materials. Only items on the above list made primarily of iron or steel, permanently incorporated into the project must be Produced in the United States. For example, trench boxes, scaffolding or equipment, which are removed from the project site upon completion of the project, are not required to be made of U.S. iron or steel.

I. Manufacturer - A Supplier, fabricator, distributor, materialman, or vendor is an entity with which the Owner, Contractor or any subcontractor has contracted to furnish materials or equipment to be incorporated in the project by the Owner, Contractor or a subcontractor.

Copyright© 2018 National Society of Professional Engineers, American Council of Engineering Companies, and American Society of Civil Engineers. All rights reserved.

J. Manufacturer's Certification - Documentation provided by the Manufacturer stating that the Iron and Steel products to be used in the project are produced in the United States in accordance with American Iron and Steel (AIS) Requirements. If items are purchased via a Supplier, distributor, vendor, etc. from the Manufacturer directly, then the Supplier, distributor, vendor, etc. will be responsible for obtaining and providing these certifications to the parties purchasing the products.

K. Manufacturing Processes - Processes such as melting, refining, pouring, forming, rolling, drawing, finishing, and fabricating. Further, if a domestic Iron and Steel product is taken out of the United States for any part of the manufacturing process, it becomes foreign source material. However, raw materials such as iron ore, limestone and iron and steel scrap are not covered by the AIS requirement, and the material(s), if any, being applied as a Coating are similarly not covered. Non-iron or Steel components of an Iron and Steel product may come from non-US sources. For example, for products such as valves and hydrants, the individual non-Iron and Steel components do not have to be of domestic origin. Raw materials, such as iron ore, limestone, scrap iron, and scrap steel, can come from non-U.S. sources.

L. Mechanical Equipment - Typically equipment which has motorized parts and/or is powered by a motor. AIS does not apply to Mechanical Equipment.

M. Minor Components - Components within an iron and/or Steel product otherwise compliant with the American Iron and Steel requirements; this waiver is typically used by Manufacturers. It differs from the De Minimis definition in that De Minimis pertains to the entire project and the minor component definition pertains to a single product. This waiver allows use of non-domestically produced miscellaneous Minor Components comprising up to five percent of the total material cost of an otherwise domestically produced Iron and Steel product. However, unless a separate waiver for a product has been approved, all other Iron and Steel components in said product must still meet the AIS requirements. This waiver does not exempt the whole product from the AIS requirements only Minor Components within said product and the iron or Steel components of the product must be produced domestically. Valves and hydrants are also subject to the cost ceiling requirements described here. Examples of Minor Components could include items such as pins and springs in valves/hydrants, bands/straps in couplings, and other low-cost items such as small fasteners etc.

N. Municipal Castings - Cast iron or Steel infrastructure products that are melted and cast. They typically provide access, protection, or housing for components incorporated into utility owned drinking water, storm water, wastewater, and solid waste infrastructure.

O. Primarily Iron or Steel - A product is made of greater than 50 percent iron or Steel on a materials cost basis. An exception to this definition is reinforced precast concrete (see Definitions). All technical specifications and applicable industry standards (e.g. NIST, NSF, AWWA) must be met. If a product is determined to be less than 50 percent iron and/or steel, the AIS requirements do not apply. For example, the cost of a fire hydrant includes:

1. The cost of materials used for the iron portion of a fire hydrant (e.g. bonnet, body and shoe); and
2. The cost to pour and cast to create those components (e.g. labor and energy).
3. Not included in the cost are:
    a. The additional material costs for the non-iron or Steel internal workings of the hydrant (e.g. stem, coupling, valve, seals, etc.); and

Copyright© 2018 National Society of Professional Engineers, American Council of Engineering Companies, and American Society of Civil Engineers. All rights reserved.

b. The cost to assemble the internal workings into the hydrant body.

P. Produced in the United States - The production in the United States of the iron or Steel products used in the project requires that all Manufacturing Processes must take place in the United States, with the exception of metallurgical processes involving refinement of steel additives.

Q. Reinforced Precast Concrete – Reinforced Precast Concrete structures must comply with AIS, regardless of whether or not it consists of at least 50 percent iron or steel. The reinforcing bar and wire must be Produced in the United States and meet the same standards as for any other iron or Steel product. Additionally, the casting of the concrete product must take place in the United States. The cement and other raw materials used in concrete production are not required to be of domestic origin. If the reinforced concrete is cast at the construction site, the reinforcing bar and wire are considered Construction Materials and must be Produced in the United States.

R. Steel - An alloy that includes at least 50 percent iron, between 0.02 and 2 percent carbon, and may include other elements. Metallic elements such as chromium, nickel, molybdenum, manganese, and silicon may be added during the melting of Steel for the purpose of enhancing properties such as corrosion resistance, hardness, or strength. The definition of Steel covers carbon steel, alloy steel, stainless steel, tool steel, and other specialty steels.

S. Structural Steel - Rolled flanged shapes, having at least one dimension of their cross-section three inches or greater, which are used in the construction of bridges, buildings, ships, railroad rolling stock, and for numerous other constructional purposes. Such shapes are designated as wide-flange shapes, standard I-beams, channels, angles, tees, and zees. Other shapes include but are not limited to, H-piles, sheet piling, tie plates, cross ties, and those for other special purposes.

1.03 Terminology

A. The words and terms discussed in Paragraphs 1.02.B, C, D, and E are not defined terms that require initial capital letters, but, when used in the Bidding Requirements or Contract Documents, have the indicated meaning.

B. *Intent of Certain Terms or Adjectives*: The Contract Documents include the terms “as allowed,” “as approved,” “as ordered,” “as directed” or terms of like effect or import to authorize an exercise of professional judgment by Engineer. In addition, the adjectives “reasonable,” “suitable,” “acceptable,” “proper,” “satisfactory,” or adjectives of like effect or import are used to describe an action or determination of Engineer as to the Work. It is intended that such exercise of professional judgment, action, or determination will be solely to evaluate, in general, the Work for compliance with the information in the Contract Documents and with the design concept of the Project as a functioning whole as shown or indicated in the Contract Documents (unless there is a specific statement indicating otherwise). The use of any such term or adjective is not intended to and shall not be effective to assign to Engineer any duty or authority to supervise or direct the performance of the Work, or any duty or authority to undertake responsibility contrary to the provisions of Article 10 or any other provision of the Contract Documents.

C. *Day*: The word “day” means a calendar day of 24 hours measured from midnight to the next midnight.

Copyright© 2018 National Society of Professional Engineers, American Council of Engineering Companies, and American Society of Civil Engineers. All rights reserved.

D. *Defective*: The word "defective," when modifying the word "Work," refers to Work that is unsatisfactory, faulty, or deficient in that it:

1. does not conform to the Contract Documents;
2. does not meet the requirements of any applicable inspection, reference standard, test, or approval referred to in the Contract Documents; or
3. has been damaged prior to Engineer's recommendation of final payment (unless responsibility for the protection thereof has been assumed by Owner at Substantial Completion in accordance with Paragraph 15.03 or Paragraph 15.04).

E. *Furnish, Install, Perform, Provide*

1. The word "furnish," when used in connection with services, materials, or equipment, means to supply and deliver said services, materials, or equipment to the Site (or some other specified location) ready for use or installation and in usable or operable condition.
2. The word "install," when used in connection with services, materials, or equipment, means to put into use or place in final position said services, materials, or equipment complete and ready for intended use.
3. The words "perform" or "provide," when used in connection with services, materials, or equipment, means to furnish and install said services, materials, or equipment complete and ready for intended use.
4. If the Contract Documents establish an obligation of Contractor with respect to specific services, materials, or equipment, but do not expressly use any of the four words "furnish," "install," "perform," or "provide," then Contractor shall furnish and install said services, materials, or equipment complete and ready for intended use.

F. *Contract Price or Contract Times*: References to a change in "Contract Price or Contract Times" or "Contract Times or Contract Price" or similar, indicate that such change applies to (1) Contract Price, (2) Contract Times, or (3) both Contract Price and Contract Times, as warranted, even if the term "or both" is not expressed.

G. Unless stated otherwise in the Contract Documents, words or phrases that have a well-known technical or construction industry or trade meaning are used in the Contract Documents in accordance with such recognized meaning.

ARTICLE 2—PRELIMINARY MATTERS

2.01 Delivery of Performance and Payment Bonds; Evidence of Insurance

A. *Performance and Payment Bonds*: When Contractor delivers the signed counterparts of the Agreement to Owner, Contractor shall also deliver to Owner the performance bond and payment bond (if the Contract requires Contractor to furnish such bonds).

B. *Evidence of Contractor's Insurance*: When Contractor delivers the signed counterparts of the Agreement to Owner, Contractor shall also deliver to Owner, with copies to each additional insured (as identified in the Contract), the certificates, endorsements, and other evidence of insurance required to be provided by Contractor in accordance with Article 6.

C. *Evidence of Owner's Insurance*: After receipt of the signed counterparts of the Agreement and all required bonds and insurance documentation, Owner shall promptly deliver to Contractor,

Copyright© 2018 National Society of Professional Engineers, American Council of Engineering Companies, and American Society of Civil Engineers. All rights reserved.

DocuSign Envelope ID: D92FB7CA-DD9A-40FF-B59F-20FB66385E4F

with copies to each additional insured (as identified in the Contract), the certificates and other evidence of insurance required to be provided by Owner under Article 6.

2.02 Copies of Documents

A. Owner shall furnish to Contractor four printed copies of the conformed Contract Documents incorporating and integrating all Addenda and any amendments negotiated prior to the Effective Date of the Contract (including one fully signed counterpart of the Agreement), and one copy in electronic portable document format (PDF). Additional printed copies will be furnished upon request at the cost of reproduction.

B. Owner shall maintain and safeguard at least one original printed record version of the Contract, including Drawings and Specifications signed and sealed by Engineer and other design professionals. Owner shall make such original printed record version of the Contract available to Contractor for review. Owner may delegate the responsibilities under this provision to Engineer.

2.03 Before Starting Construction

A. *Preliminary Schedules*: Within 10 days after the Effective Date of the Contract (or as otherwise required by the Contract Documents), Contractor shall submit to Engineer for timely review:

1. Three (3) copies of an initial schedule or schedules which shall show the dates at which the CONTRACTOR will start and complete the various parts of the contract. The scheduled completion date must be the same as the contractual completion date. Should the CONTRACTOR show a completion date earlier than the Contractual completion date, the resulting "float" shall belong to both the OWNER and the CONTRACTOR. The ENGINEER will review schedules and if required, CONTRACTOR shall resubmit revised schedules within two (2) working days after return of review copy. The Notice to Proceed will not be issued until an acceptable schedule is submitted.

2. a preliminary Schedule of Submittals; and

3. a preliminary Schedule of Values for all of the Work which includes quantities and prices of items which when added together equal the Contract Price and subdivides the Work into component parts in sufficient detail to serve as the basis for progress payments during performance of the Work. Such prices will include an appropriate amount of overhead and profit applicable to each item of Work.

B. Within thirty (30) days following opening of Bids, unless the Owner decides to cancel the award as allowed by law, the apparent low Bidder will be furnished with a Notice of Award accompanied by three (3) copies each of the Contract Documents in form for signatures.

2.04 Preconstruction Conference; Designation of Authorized Representatives

A. CONTRACTOR shall start to perform the Work within ten (10) calendar days after the date indicated upon the written Notice to Proceed issued by the ENGINEER. No Work shall be done at the Site prior to the date on which the Contract Times commence to run, all governmental permits, approvals or authorizations have been given, and all insurance certificates have been submitted to the Owner.

B. Before any Work at the Site is started, a conference attended by Owner, Contractor, Engineer, and others as appropriate will be held to establish a working understanding among the parties as to the Work, and to discuss the schedules referred to in Paragraph 2.03.A, procedures for

Copyright© 2018 National Society of Professional Engineers, American Council of Engineering Companies, and American Society of Civil Engineers. All rights reserved.

handling Shop Drawings, Samples, and other Submittals, processing Applications for Payment, electronic or digital transmittals, and maintaining required records.

C. At this conference Owner and Contractor each shall designate, in writing, a specific individual to act as its authorized representative with respect to the services and responsibilities under the Contract. Such individuals shall have the authority to transmit and receive information, render decisions relative to the Contract, and otherwise act on behalf of each respective party.

2.05 Acceptance of Schedules

A. At least 10 days before submission of the first Application for Payment a conference, attended by Contractor, Engineer, and others as appropriate, will be held to review the schedules submitted in accordance with Paragraph 2.03.A. No progress payment will be made to Contractor until acceptable schedules are submitted to Engineer.

1. The Progress Schedule will be acceptable to Engineer if it provides an orderly progression of the Work to completion within the Contract Times. Such acceptance will not impose on Engineer responsibility for the Progress Schedule, for sequencing, scheduling, or progress of the Work, nor interfere with or relieve Contractor from Contractor's full responsibility therefor.

2. Contractor's Schedule of Submittals will be acceptable to Engineer if it provides a workable arrangement for reviewing and processing the required submittals.

3. Contractor's Schedule of Values will be acceptable to Engineer as to form and substance if it provides a reasonable allocation of the Contract Price to the component parts of the Work.

4. If a schedule is not acceptable, Contractor will have an additional 10 days to revise and resubmit the schedule.

2.06 Electronic Transmittals

A. Except as otherwise stated elsewhere in the Contract, the Owner, Engineer, and Contractor may send, and shall accept, Electronic Documents transmitted by Electronic Means.

B. *Electronic Documents Protocol:* The parties shall conform to the following provisions in Paragraphs 2.06.B and 2.06.C, together referred to as the Electronic Documents Protocol ("EDP" or "Protocol") for exchange of electronic transmittals.

1. Basic Requirements

a. To the fullest extent practical, the parties agree to and will transmit and accept Electronic Documents in an electronic or digital format using the procedures described in this Protocol. Use of the Electronic Documents and any information contained therein is subject to the requirements of this Protocol and other provisions of the Contract.

b. The contents of the information in any Electronic Document will be the responsibility of the transmitting party.

c. Electronic Documents as exchanged by this Protocol may be used in the same manner as the printed versions of the same documents that are exchanged using non-electronic format and methods, subject to the same governing requirements, limitations, and restrictions, set forth in the Contract Documents.

Copyright© 2018 National Society of Professional Engineers, American Council of Engineering Companies, and American Society of Civil Engineers. All rights reserved.

d. Except as otherwise explicitly stated herein, the terms of this Protocol will be incorporated into any other agreement or subcontract between a party and any third party for any portion of the Work on the Project, or any Project-related services, where that third party is, either directly or indirectly, required to exchange Electronic Documents with a party or with Engineer. Nothing herein will modify the requirements of the Contract regarding communications between and among the parties and their subcontractors and consultants.

e. When transmitting Electronic Documents, the transmitting party makes no representations as to long term compatibility, usability, or readability of the items resulting from the receiving party's use of software application packages, operating systems, or computer hardware differing from those established in this Protocol.

f. Nothing herein negates any obligation 1) in the Contract to create, provide, or maintain an original printed record version of Drawings and Specifications, signed and sealed according to applicable Laws and Regulations; 2) to comply with any applicable Law or Regulation governing the signing and sealing of design documents or the signing and electronic transmission of any other documents; or 3) to comply with the notice requirements of Paragraph 18.01 of the General Conditions.

2. System Infrastructure for Electronic Document Exchange

a. Owner will provide hardware, operating system(s) software, internet, e-mail, and large file transfer functions ("System Infrastructure") at its own cost and sufficient for complying with the EDP requirements. With the exception of minimum standards set forth in this EDP, and any explicit system requirements specified by attachment to this EDP, it is the obligation of each party to determine, for itself, its own System Infrastructure.

1) The maximum size of an email attachment for exchange of Electronic Documents under this EDP is 7 MB. Attachments larger than that may be exchanged using large file transfer functions or physical media.

2) Each Party assumes full and complete responsibility for any and all of its own costs, delays, deficiencies, and errors associated with converting, translating, updating, verifying, licensing, or otherwise enabling its System Infrastructure, including operating systems and software, for use with respect to this EDP.

b. Each party is responsible for its own system operations, security, back-up, archiving, audits, printing resources, and other Information Technology ("IT") for maintaining operations of its System Infrastructure during the Project, including coordination with the party's individual(s) or entity responsible for managing its System Infrastructure and capable of addressing routine communications and other IT issues affecting the exchange of Electronic Documents.

c. Each party will operate and maintain industry-standard, industry-accepted, ISO-standard, commercial-grade security software and systems that are intended to protect the other party from: software viruses and other malicious software like worms, trojans, adware; data breaches; loss of confidentiality; and other threats in the transmission to or storage of information from the other parties, including transmission of Electronic Documents by physical media such as CD/DVD/flash drive/hard drive. To the extent that a party maintains and operates such security

Copyright© 2018 National Society of Professional Engineers, American Council of Engineering Companies, and American Society of Civil Engineers. All rights reserved.

software and systems, it shall not be liable to the other party for any breach of system security.

d. In the case of disputes, conflicts, or modifications to the EDP required to address issues affecting System Infrastructure, the parties shall cooperatively resolve the issues; but, failing resolution, the Owner is authorized to make and require reasonable and necessary changes to the EDP to effectuate its original intent. If the changes cause additional cost or time to Contractor, not reasonably anticipated under the original EDP, Contractor may seek an adjustment in price or time under the appropriate process in the Contract.

e. Each party is responsible for its own back-up and archive of documents sent and received during the term of the contract under this EDP, unless this EDP establishes a Project document archive, either as part of a mandatory Project website or other communications protocol, upon which the parties may rely for document archiving during the specified term of operation of such Project document archive. Further, each party remains solely responsible for its own post-Project back-up and archive of Project documents after the term of the Contract, or after termination of the Project document archive, if one is established, for as long as required by the Contract and as each party deems necessary for its own purposes.

f. If a receiving party receives an obviously corrupted, damaged, or unreadable Electronic Document, the receiving party will advise the sending party of the incomplete transmission.

g. The parties will bring any non-conforming Electronic Documents into compliance with the EDP. The parties will attempt to complete a successful transmission of the Electronic Document or use an alternative delivery method to complete the communication.

h. The Owner will operate a Project information management system (also referred to in this EDP as "Project Website") for use of Owner, Engineer and Contractor during the Project for exchange and storage of Project-related communications and information. Except as otherwise provided in this EDP or the General Conditions, use of the Project Website by the parties as described in this Paragraph will be mandatory for exchange of Project documents, communications, submittals, and other Project-related information. The following conditions and standards will govern use of the Project Website:

   1) Describe the period of time during which the Project Website will be operated and be available for reliance by the parties;

   2) Provide any minimum system infrastructure, software licensing and security standards for access to and use of the Project Website;

   3) Describe the types and extent of services to be provided at the Project Website (such as large file transfer, email, communication and document archives, etc.); and

   4) Include any other Project Website attributes that may be pertinent to Contractor's use of the facility and pricing of such use.

Copyright© 2018 National Society of Professional Engineers, American Council of Engineering Companies, and American Society of Civil Engineers. All rights reserved.

C. Software Requirements for Electronic Document Exchange; Limitations

1. Each party will acquire the software and software licenses necessary to create and transmit Electronic Documents and to read and to use any Electronic Documents received from the other party (and if relevant from third parties), using the software formats required in this section of the EDP.

   a. Prior to using any updated version of the software required in this section for sending Electronic Documents to the other party, the originating party will first notify and receive concurrence from the other party for use of the updated version or adjust its transmission to comply with this EDP.

2. The parties agree not to intentionally edit, reverse engineer, decrypt, remove security or encryption features, or convert to another format for modification purposes any Electronic Document or information contained therein that was transmitted in a software data format, including Portable Document Format (PDF), intended by sender not to be modified, unless the receiving party obtains the permission of the sending party or is citing or quoting excerpts of the Electronic Document for Project purposes.

3. Software and data formats for exchange of Electronic Documents will conform to the requirements set forth in Exhibit A to this EDP, including software versions, if listed.

D. Requests by Contractor for Electronic Documents in Other Formats

1. Release of any Electronic Document versions of the Project documents in formats other than those identified in the Electronic Documents Protocol (if any) or elsewhere in the Contract will be at the sole discretion of the Owner.

2. To extent determined by Owner, in its sole discretion, to be prudent and necessary, release of Electronic Documents versions of Project documents and other Project information requested by Contractor ("Request") in formats other than those identified in the Electronic Documents Protocol (if any) or elsewhere in the Contract will be subject to the provisions of the Owner's response to the Request, and to the following conditions to which Contractor agrees:

   a. The content included in the Electronic Documents created by Engineer and covered by the Request was prepared by Engineer as an internal working document for Engineer's purposes solely, and is being provided to Contractor on an "AS IS" basis without any warranties of any kind, including, but not limited to any implied warranties of fitness for any purpose. As such, Contractor is advised and acknowledges that the content may not be suitable for Contractor's application, or may require substantial modification and independent verification by Contractor. The content may include limited resolution of models, not-to-scale schematic representations and symbols, use of notes to convey design concepts in lieu of accurate graphics, approximations, graphical simplifications, undocumented intermediate revisions, and other devices that may affect subsequent reuse.

   b. Electronic Documents containing text, graphics, metadata, or other types of data that are provided by Engineer to Contractor under the request are only for convenience of Contractor. Any conclusion or information obtained or derived from such data will be at the Contractor's sole risk and the Contractor waives any claims against Engineer or Owner arising from use of data in Electronic Documents covered by the Request.

Copyright© 2018 National Society of Professional Engineers, American Council of Engineering Companies, and American Society of Civil Engineers. All rights reserved.

c. Contractor shall indemnify and hold harmless Owner and Engineer and their subconsultants from all claims, damages, losses, and expenses, including attorneys' fees and defense costs arising out of or resulting from Contractor's use, adaptation, or distribution of any Electronic Documents provided under the Request.

d. Contractor agrees not to sell, copy, transfer, forward, give away or otherwise distribute this information (in source or modified file format) to any third party without the direct written authorization of Engineer, unless such distribution is specifically identified in the Request and is limited to Contractor's subcontractors. Contractor warrants that subsequent use by Contractor's subcontractors complies with all terms of the Contract Documents and Owner's response to Request.

3. In the event that Owner elects to provide or directs the Engineer to provide to Contractor any Contractor-requested Electronic Document versions of Project information that is not explicitly identified in the Contract Documents as being available to Contractor, the Owner shall be reimbursed by Contractor on an hourly basis at $250 per hour for any engineering costs necessary to create or otherwise prepare the data in a manner deemed appropriate by Engineer.

ARTICLE 3—CONTRACT DOCUMENTS: INTENT, REQUIREMENTS, REUSE

3.01 Intent

A. The Contract Documents are complementary; what is required by one Contract Document is as binding as if required by all.

B. It is the intent of the Contract Documents to describe a functionally complete Project (or part thereof) to be constructed in accordance with the Contract Documents.

C. Unless otherwise stated in the Contract Documents, if there is a discrepancy between the electronic versions of the Contract Documents (including any printed copies derived from such electronic versions) and the printed record version, the printed record version will govern.

D. The Contract supersedes prior negotiations, representations, and agreements, whether written or oral.

E. Engineer will issue clarifications and interpretations of the Contract Documents as provided herein.

F. Any provision or part of the Contract Documents held to be void or unenforceable under any Law or Regulation will be deemed stricken, and all remaining provisions will continue to be valid and binding upon Owner and Contractor, which agree that the Contract Documents will be reformed to replace such stricken provision or part thereof with a valid and enforceable provision that comes as close as possible to expressing the intention of the stricken provision.

G. Nothing in the Contract Documents creates:

1. any contractual relationship between Owner or Engineer and any Subcontractor, Supplier, or other individual or entity performing or furnishing any of the Work, for the benefit of such Subcontractor, Supplier, or other individual or entity; or

Copyright© 2018 National Society of Professional Engineers, American Council of Engineering Companies, and American Society of Civil Engineers. All rights reserved.

2. any obligation on the part of Owner or Engineer to pay or to see to the payment of any money due any such Subcontractor, Supplier, or other individual or entity, except as may otherwise be required by Laws and Regulations.

3.02 Reference Standards

A. *Standards Specifications, Codes, Laws and Regulations*

1. Reference in the Contract Documents to standard specifications, manuals, reference standards, or codes of any technical society, organization, or association, or to Laws or Regulations, whether such reference be specific or by implication, means the standard specification, manual, reference standard, code, or Laws or Regulations in effect at the time of opening of Bids (or on the Effective Date of the Contract if there were no Bids), except as may be otherwise specifically stated in the Contract Documents.

3. No provision of any such standard specification, manual, reference standard, or code, and no instruction of a Supplier, will be effective to change the duties or responsibilities of Owner, Contractor, or Engineer from those set forth in the part of the Contract Documents prepared by or for Engineer. No such provision or instruction shall be effective to assign to Owner or Engineer any duty or authority to supervise or direct the performance of the Work, or any duty or authority to undertake responsibility inconsistent with the provisions of the part of the Contract Documents prepared by or for Engineer.

3.03 Reporting and Resolving Discrepancies

A. Reporting Discrepancies

1. *Contractor's Verification of Figures and Field Measurements*: Before undertaking each part of the Work, Contractor shall carefully study the Contract Documents, and check and verify pertinent figures and dimensions therein, particularly with respect to applicable field measurements. Contractor shall promptly report in writing to Engineer any conflict, error, ambiguity, or discrepancy that Contractor discovers, or has actual knowledge of, and shall not proceed with any Work affected thereby until the conflict, error, ambiguity, or discrepancy is resolved by a clarification or interpretation by Engineer, or by an amendment or supplement to the Contract issued pursuant to Paragraph 11.01.

2. *Contractor's Review of Contract Documents*: If, before or during the performance of the Work, Contractor discovers any conflict, error, ambiguity, or discrepancy within the Contract Documents, or between the Contract Documents and (a) any applicable Law or Regulation, (b) actual field conditions, (c) any standard specification, manual, reference standard, or code, or (d) any instruction of any Supplier, then Contractor shall promptly report it to Engineer in writing. Contractor shall not proceed with the Work affected thereby (except in an emergency as required by Paragraph 7.15) until the conflict, error, ambiguity, or discrepancy is resolved, by a clarification or interpretation by Engineer, or by an amendment or supplement to the Contract issued pursuant to Paragraph 11.01.

3. Contractor shall not be liable to Owner or Engineer for failure to report any conflict, error, ambiguity, or discrepancy in the Contract Documents unless Contractor had actual knowledge thereof.

B. Resolving Discrepancies

1. Except as may be otherwise specifically stated in the Contract Documents, the provisions of the part of the Contract Documents prepared by or for Engineer take precedence in

Copyright© 2018 National Society of Professional Engineers, American Council of Engineering Companies, and American Society of Civil Engineers. All rights reserved.

resolving any conflict, error, ambiguity, or discrepancy between such provisions of the Contract Documents and:

a. the provisions of any standard specification, manual, reference standard, or code, or the instruction of any Supplier (whether or not specifically incorporated by reference as a Contract Document); or

b. the provisions of any Laws or Regulations applicable to the performance of the Work (unless such an interpretation of the provisions of the Contract Documents would result in violation of such Law or Regulation).

3.04 Requirements of the Contract Documents

A. During the performance of the Work and until final payment, Contractor and Owner shall submit to the Engineer in writing all matters in question concerning the requirements of the Contract Documents (sometimes referred to as requests for information or interpretation—RFIs), or relating to the acceptability of the Work under the Contract Documents, as soon as possible after such matters arise. Engineer will be the initial interpreter of the requirements of the Contract Documents, and judge of the acceptability of the Work.

B. Engineer will, with reasonable promptness, render a written clarification, interpretation, or decision on the issue submitted, or initiate an amendment or supplement to the Contract Documents. Engineer's written clarification, interpretation, or decision will be final and binding on Contractor, unless it appeals by submitting a Change Proposal, and on Owner, unless it appeals by filing a Claim.

C. If a submitted matter in question concerns terms and conditions of the Contract Documents that do not involve (1) the performance or acceptability of the Work under the Contract Documents, (2) the design (as set forth in the Drawings, Specifications, or otherwise), or (3) other engineering or technical matters, then Engineer will promptly notify Owner and Contractor in writing that Engineer is unable to provide a decision or interpretation. If Owner and Contractor are unable to agree on resolution of such a matter in question, either party may pursue resolution as provided in Article 12.

3.05 Reuse of Documents

A. Contractor and its Subcontractors and Suppliers shall not:

1. have or acquire any title to or ownership rights in any of the Drawings, Specifications, or other documents (or copies of any thereof) prepared by or bearing the seal of Engineer or its consultants, including electronic media versions, or reuse any such Drawings, Specifications, other documents, or copies thereof on extensions of the Project or any other project without written consent of Owner and Engineer and specific written verification or adaptation by Engineer; or

2. have or acquire any title or ownership rights in any other Contract Documents, reuse any such Contract Documents for any purpose without Owner's express written consent, or violate any copyrights pertaining to such Contract Documents.

B. The prohibitions of this Paragraph 3.05 will survive final payment, or termination of the Contract. Nothing herein precludes Contractor from retaining copies of the Contract Documents for record purposes.

Copyright© 2018 National Society of Professional Engineers, American Council of Engineering Companies, and American Society of Civil Engineers. All rights reserved.

3.06 Order of Precedence of Contract Documents

A. In resolving conflicts resulting from errors or discrepancies in any of the Contract Documents, the order of precedence shall be as follows:

1. Permits from other agencies as may be required by law;
2. Addenda, Supplemental Agreements and Change Orders, the one dated later having the precedence over another dated earlier;
3. Agreement;
4. Owner's Special Provisions;
5. General Conditions (Section 00700);
6. General Requirements (Sections 01010 through 01999);
7. Other Technical Specifications (Section 02000 and all other Sections following);
8. Drawings;
9. Instructions to Bidders;
10. Bid Forms;
11. Invitation to Bid.

B. With reference to the Drawings, the order of precedence is as follows:

1. Enumerated dimensions govern over scaled dimensions
2. Detail drawings govern over general drawings
3. Addenda/Change Order drawings govern over any other drawings
4. Contract Drawings govern over standard drawings/plans
5. Specific notes take precedence over schedules
6. Notes, descriptions or schedules take precedence over graphic representations

C. The provisions of the Contract Documents shall take precedence over any Laws or Regulations applicable to the performance of the work unless such an interpretation of the provisions of the Contract Documents would result in a violation of such Law or Regulation.

3.07 American Iron and Steel (AIS) Requirements

A. The Contractor acknowledges to and for the benefit of the City of Sweet Home ("Purchaser") and the State of Oregon (the "State") that it understands the goods and services under this Agreement are being funded with monies made available by the Clean Water State Revolving Fund and/or Drinking Water State Revolving Fund that have statutory requirements commonly known as "American Iron and Steel;" that requires all of the iron and steel products used in the project to be produced in the United States ("American Iron and Steel Requirement") including iron and steel products provided by the Contactor pursuant to this Agreement. The Contractor hereby represents and warrants to and for the benefit of the Purchaser and the State that (a) the Contractor has reviewed and understands the American Iron and Steel Requirement, (b) all of the iron and steel products used in the project will be and/or have been produced in the United States in a manner that complies with the American Iron and Steel Requirement, unless a waiver of the requirement is approved, and (c) the

Copyright© 2018 National Society of Professional Engineers, American Council of Engineering Companies, and American Society of Civil Engineers. All rights reserved.

Contractor will provide any further verified information, certification or assurance of compliance with this paragraph, or information necessary to support a waiver of the American Iron and Steel Requirement, as may be requested by the Purchaser or the State. Notwithstanding any other provision of this Agreement, any failure to comply with this paragraph by the Contractor shall permit the Purchaser or State to recover as damages against the Contractor any loss, expense, or cost (including without limitation attorney's fees) incurred by the Purchaser or State resulting from any such failure (including without limitation any impairment or loss of funding, whether in whole or in part, from the State or any damages owed to the State by the Purchaser). While the Contractor has no direct contractual privity with the State, as a lender to the Purchaser for the funding of its project, the Purchaser and the Contractor agree that the State is a third-party beneficiary and neither this paragraph (nor any other provision of this Agreement necessary to give this paragraph force or effect) shall be amended or waived without the prior written consent of the State.

ARTICLE 4—COMMENCEMENT AND PROGRESS OF THE WORK

4.01 Commencement of Contract Times; Notice to Proceed

A. The Contract Times will commence to run on the 30th day after the Effective Date of the Contract or, if a Notice to Proceed is given, on the day indicated in the Notice to Proceed. A Notice to Proceed may be given at any time within 30 days after the Effective Date of the Contract. In no event will the Contract Times commence to run later than the 60th day after the day of Bid opening or the 30th day after the Effective Date of the Contract, whichever date is earlier.

4.02 Starting the Work

A. Contractor shall start to perform the Work on the date when the Contract Times commence to run. No Work may be done at the Site prior to such date.

4.03 Reference Points

A. Owner shall provide engineering surveys to establish reference points for construction which in Engineer's judgment are necessary to enable Contractor to proceed with the Work. Contractor shall be responsible for laying out the Work, shall protect and preserve the established reference points and property monuments, and shall make no changes or relocations without the prior written approval of Owner. Contractor shall report to Engineer whenever any reference point or property monument is lost or destroyed or requires relocation because of necessary changes in grades or locations, and shall be responsible for the accurate replacement or relocation of such reference points or property monuments by professionally qualified personnel.

4.04 Progress Schedule

A. Contractor shall adhere to the Progress Schedule established in accordance with Paragraph 2.05 as it may be adjusted from time to time as provided below.

1. Once each month, prior to the processing of the monthly progress payment, the CONTRACTOR shall provide an updated schedule to the ENGINEER. Updates must accurately reflect as-built schedule.

2. In addition, a three-week rolling "look-ahead" schedule shall be updated and provided to the ENGINEER at the beginning of each work week. The two-week rolling schedule shall

Copyright© 2018 National Society of Professional Engineers, American Council of Engineering Companies, and American Society of Civil Engineers. All rights reserved.

include the CONTRACTOR's proposed daily activities and location(s) of work during the coming two-week period. No work shall commence at the beginning of each workweek until the updated two-week rolling schedule is submitted. During the contract period, the CONTRACTOR shall also coordinate his activities daily with the ENGINEER.

3. Proposed adjustments in the Progress Schedule that will change the Contract Times must be submitted in accordance with the requirements of Article 11.

B. Contractor shall carry on the Work and adhere to the Progress Schedule during all disputes or disagreements with Owner. No Work will be delayed or postponed pending resolution of any disputes or disagreements, or during any appeal process, except as permitted by Paragraph 16.04, or as Owner and Contractor may otherwise agree in writing.

4.05 Delays in Contractor's Progress

A. If Owner, Engineer, or anyone for whom Owner is responsible, delays, disrupts, or interferes with the performance or progress of the Work, then Contractor shall be entitled to an equitable adjustment in Contract Price or Contract Times.

B. Contractor shall not be entitled to an adjustment in Contract Price or Contract Times for delay, disruption, or interference caused by or within the control of Contractor. Delay, disruption, and interference attributable to and within the control of a Subcontractor or Supplier shall be deemed to be within the control of Contractor.

C. If Contractor's performance or progress is delayed, disrupted, or interfered with by unanticipated causes not the fault of and beyond the control of Owner, Contractor, and those for which they are responsible, then Contractor shall be entitled to an equitable adjustment in Contract Times. Such an adjustment will be Contractor's sole and exclusive remedy for the delays, disruption, and interference described in this paragraph. Causes of delay, disruption, or interference that may give rise to an adjustment in Contract Times under this paragraph include but are not limited to the following:

1. Severe and unavoidable natural catastrophes such as fires, floods, epidemics, and earthquakes;

2. Abnormal weather conditions;

3. Acts or failures to act of third-party utility owners or other third-party entities (other than those third-party utility owners or other third-party entities performing other work at or adjacent to the Site as arranged by or under contract with Owner, as contemplated in Article 8); and

4. Acts of war or terrorism.

5. Weather-Related Delays

a. If "abnormal weather conditions" as set forth in Paragraph 4.05.C.2 of the General Conditions are the basis for a request for an equitable adjustment in the Contract Times, such request must be documented by data substantiating each of the following: 1) that weather conditions were abnormal for the period of time in which the delay occurred, 2) that such weather conditions could not have been reasonably anticipated, and 3) that such weather conditions had an adverse effect on the Work as scheduled.

Copyright© 2018 National Society of Professional Engineers, American Council of Engineering Companies, and American Society of Civil Engineers. All rights reserved.

b. The existence of abnormal weather conditions will be determined on a month-by-month basis in accordance with the following:

1) Every workday on which one or more of the following conditions exist will be considered a "bad weather day":

i) Total precipitation (as rain equivalent) occurring between 7:00 p.m. on the preceding day (regardless of whether such preceding day is a workday) through 7:00 p.m. on the workday in question equals or exceeds **1.0** inches of precipitation (as rain equivalent, based on the snow/rain conversion indicated in the table entitled Foreseeable Bad Weather Days; such table is hereby incorporated in this SC-4.05.C by reference.

ii) Ambient outdoor air temperature for 60 minutes between the hours of 10:00 a.m. and 3:00 p.m. is equal to or less than the following low temperature threshold: **15** degrees Fahrenheit; or, at 3:00 p.m. the ambient outdoor temperature is equal to or greater than the following high temperature threshold: **100** degrees Fahrenheit.

2) Determination of actual bad weather days during performance of the Work will be based on the weather records measured and recorded by the City of Sweet Home Public Works Department.

3) Contractor shall anticipate the number of foreseeable bad weather days per month indicated in the table below —Foreseeable Bad Weather Days.

4) Contractor shall include the following Foreseeable Bad Weather Days in the Progress Schedule as follows:

i) January – 3 Days

ii) February – 2 Days

iii) March – 1 Day

iv) April – 1 Days

v) May – 0 Days

vi) June – 0 Days

vii) July – 1 Days

viii) August – 2 Days

iv) September – 1 Days

v) October – 1 Day

vi) November – 2 Days

vii) December – 3 Days

5) In each month, every bad weather day exceeding the number of Foreseeable Bad Weather Days will be considered as "abnormal weather conditions." The existence of abnormal weather conditions will not relieve Contractor of the obligation to demonstrate and document that delays caused by abnormal weather are specific to the planned work activities or that such activities thus

Copyright© 2018 National Society of Professional Engineers, American Council of Engineering Companies, and American Society of Civil Engineers. All rights reserved.

delayed were on Contractor's then-current Progress Schedule's critical path for the Project.

6) If mutually agreed upon by Owner and Contractor, working hours during days with anticipated abnormal weather periods can be adjusted to allow work earlier or later in the day depending on the type of abnormal weather expected.

D. Contractor's entitlement to an adjustment of Contract Times or Contract Price is limited as follows:

1. Contractor's entitlement to an adjustment of the Contract Times is conditioned on the delay, disruption, or interference adversely affecting an activity on the critical path to completion of the Work, as of the time of the delay, disruption, or interference.

2. Contractor shall not be entitled to an adjustment in Contract Price for any delay, disruption, or interference if such delay is concurrent with a delay, disruption, or interference caused by or within the control of Contractor. Such a concurrent delay by Contractor shall not preclude an adjustment of Contract Times to which Contractor is otherwise entitled.

3. Adjustments of Contract Times or Contract Price are subject to the provisions of Article 11.

E. Each Contractor request or Change Proposal seeking an increase in Contract Times or Contract Price must be supplemented by supporting data that sets forth in detail the following:

1. The circumstances that form the basis for the requested adjustment;

2. The date upon which each cause of delay, disruption, or interference began to affect the progress of the Work;

3. The date upon which each cause of delay, disruption, or interference ceased to affect the progress of the Work;

4. The number of days' increase in Contract Times claimed as a consequence of each such cause of delay, disruption, or interference; and

5. The impact on Contract Price, in accordance with the provisions of Paragraph 11.07.

6. Contractor shall also furnish such additional supporting documentation as Owner or Engineer may require including, where appropriate, a revised progress schedule indicating all the activities affected by the delay, disruption, or interference, and an explanation of the effect of the delay, disruption, or interference on the critical path to completion of the Work.

F. Delays, disruption, and interference to the performance or progress of the Work resulting from the existence of a differing subsurface or physical condition, an Underground Facility that was not shown or indicated by the Contract Documents, or not shown or indicated with reasonable accuracy, and those resulting from Hazardous Environmental Conditions, are governed by Article 5, together with the provisions of Paragraphs 4.05.D and 4.05.E.

G. Paragraph 8.03 addresses delays, disruption, and interference to the performance or progress of the Work resulting from the performance of certain other work at or adjacent to the Site.

Copyright© 2018 National Society of Professional Engineers, American Council of Engineering Companies, and American Society of Civil Engineers. All rights reserved.

ARTICLE 5—SITE; SUBSURFACE AND PHYSICAL CONDITIONS; HAZARDOUS ENVIRONMENTAL CONDITIONS

5.01 Availability of Lands

A. Owner shall furnish the Site. Owner shall notify Contractor in writing of any encumbrances or restrictions not of general application but specifically related to use of the Site with which Contractor must comply in performing the Work.

B. Upon reasonable written request, Owner shall furnish Contractor with a current statement of record legal title and legal description of the lands upon which permanent improvements are to be made and Owner's interest therein as necessary for giving notice of or filing a mechanic's or construction lien against such lands in accordance with applicable Laws and Regulations.

C. Contractor shall provide for all additional lands and access thereto that may be required for temporary construction facilities or storage of materials and equipment.

5.02 Use of Site and Other Areas

A. *Limitation on Use of Site and Other Areas*

1. Contractor shall confine construction equipment, the storage of materials and equipment and operations of workers to the work and staging areas as shown on the drawings and shall not unreasonably encumber the site and other areas with construction equipment or other materials or equipment. Contractor shall be responsible for keeping driveways and other main access points to the site open. Contractor shall assume full responsibility for any damage to any such land or area, or to the owner or occupant thereof, or of any adjacent land or areas resulting from the performance of the Work. Use of additional areas onsite or offsite may be allowed if authorized in writing by the Owner.

2. If a damage or injury claim is made by the owner or occupant of any such land or area because of the performance of the Work, or because of other actions or conduct of the Contractor or those for which Contractor is responsible, Contractor shall (a) take immediate corrective or remedial action as required by Paragraph 7.13, or otherwise; (b) promptly attempt to settle the claim as to all parties through negotiations with such owner or occupant, or otherwise resolve the claim by arbitration or other dispute resolution proceeding, or in a court of competent jurisdiction; and (c) to the fullest extent permitted by Laws and Regulations, indemnify and hold harmless Owner and Engineer, and the officers, directors, members, partners, employees, agents, consultants and subcontractors of each and any of them, from and against any such claim, and against all costs, losses, and damages (including but not limited to all fees and charges of engineers, architects, attorneys, and other professionals and all court or arbitration or other dispute resolution costs) arising out of or relating to any claim or action, legal or equitable, brought by any such owner or occupant against Owner, Engineer, or any other party indemnified hereunder to the extent caused directly or indirectly, in whole or in part by, or based upon, Contractor's performance of the Work, or because of other actions or conduct of the Contractor or those for which Contractor is responsible.

B. *Removal of Debris During Performance of the Work*: During the progress of the Work the Contractor shall keep the Site and other adjacent areas free from accumulations of waste materials, rubbish, and other debris. Removal and disposal of such waste materials, rubbish, and other debris will conform to applicable Laws and Regulations.

Copyright© 2018 National Society of Professional Engineers, American Council of Engineering Companies, and American Society of Civil Engineers. All rights reserved.

C. *Cleaning*: Prior to Substantial Completion of the Work Contractor shall clean the Site and the Work and make it ready for utilization by Owner. At the completion of the Work Contractor shall remove from the Site and adjacent areas all tools, appliances, construction equipment and machinery, and surplus materials and shall restore to original condition all property not designated for alteration by the Contract Documents.

D. *Loading of Structures*: Contractor shall not load nor permit any part of any structure to be loaded in any manner that will endanger the structure, nor shall Contractor subject any part of the Work or adjacent structures or land to stresses or pressures that will endanger them.

5.03 Subsurface and Physical Conditions

A. *Reports and Drawings*: The following drawings and reports are available for the Contractor

1. Record Drawings for the Sweet Home Wastewater Treatment Plant.

   a. Contract Documents dated June 1973 consisting of 2 volumes, prepared by CH2M Hill, entitled " Sweet Home Wastewater Treatment Plant".

   b. Construction Documents dated October 1992, prepared by Kramer Chin and Mayo, entitled "City of Sweet Home Wastewater Facilities Improvements".

   c. Contract Documents dated February 1997, prepared by HGE, Inc., entitled "City of Sweet Home Wastewater Treatment Plant Improvements".

2. Site surveying completed by Udell Engineers located in Lebanon, Oregon.

3. Geotechnical Data Report (GDR) prepared by McMillen Jacobs Associates, Final dated June 2022.

4. No other information on existing subsurface or physical conditions is available for the Contractor.

B. *Underground Facilities*: Underground Facilities are shown or indicated on the Drawings, pursuant to Paragraph 5.05, and not in the drawings referred to in Paragraph 5.03.A. Information and data regarding the presence or location of Underground Facilities are not intended to be categorized, identified, or defined as Technical Data.

C. *Reliance by Contractor on Technical Data*: Contractor may rely upon the accuracy of the Technical Data with respect to such reports and drawings, but such reports and drawings are not Contract Documents. If no such express identification has been made, then Contractor may rely upon the accuracy of the Technical Data as defined in Paragraph 1.01.A.46.b.

D. *Limitations of Other Data and Documents*: Except for such reliance on Technical Data, Contractor may not rely upon or make any claim against Owner or Engineer, or any of their officers, directors, members, partners, employees, agents, consultants, or subcontractors, with respect to:

1. the completeness of such reports and drawings for Contractor's purposes, including, but not limited to, any aspects of the means, methods, techniques, sequences, and procedures of construction to be employed by Contractor, and safety precautions and programs incident thereto;

2. other data, interpretations, opinions, and information contained in such reports or shown or indicated in such drawings;

Copyright© 2018 National Society of Professional Engineers, American Council of Engineering Companies, and American Society of Civil Engineers. All rights reserved.

3. the contents of other Site-related documents made available to Contractor, such as record drawings from other projects at or adjacent to the Site, or Owner's archival documents concerning the Site; or

4. any Contractor interpretation of or conclusion drawn from any Technical Data or any such other data, interpretations, opinions, or information.

5.04 Differing Subsurface or Physical Conditions

A. *Notice by Contractor*: If Contractor believes that any subsurface or physical condition that is uncovered or revealed at the Site:

1. is of such a nature as to establish that any Technical Data on which Contractor is entitled to rely as provided in Paragraph 5.03 is materially inaccurate;

2. is of such a nature as to require a change in the Drawings or Specifications;

3. differs materially from that shown or indicated in the Contract Documents; or

4. is of an unusual nature, and differs materially from conditions ordinarily encountered and generally recognized as inherent in work of the character provided for in the Contract Documents; then Contractor shall, promptly after becoming aware thereof and before further disturbing the subsurface or physical conditions or performing any Work in connection therewith (except in an emergency as required by Paragraph 7.15), notify Owner and Engineer in writing about such condition. Contractor shall not further disturb such condition or perform any Work in connection therewith (except with respect to an emergency) until receipt of a written statement permitting Contractor to do so.

B. *Engineer's Review*: After receipt of written notice as required by the preceding paragraph, Engineer will promptly review the subsurface or physical condition in question; determine whether it is necessary for Owner to obtain additional exploration or tests with respect to the condition; conclude whether the condition falls within any one or more of the differing site condition categories in Paragraph 5.04.A; obtain any pertinent cost or schedule information from Contractor; prepare recommendations to Owner regarding the Contractor's resumption of Work in connection with the subsurface or physical condition in question and the need for any change in the Drawings or Specifications; and advise Owner in writing of Engineer's findings, conclusions, and recommendations.

C. *Owner's Statement to Contractor Regarding Site Condition*: After receipt of Engineer's written findings, conclusions, and recommendations, Owner shall issue a written statement to Contractor (with a copy to Engineer) regarding the subsurface or physical condition in question, addressing the resumption of Work in connection with such condition, indicating whether any change in the Drawings or Specifications will be made, and adopting or rejecting Engineer's written findings, conclusions, and recommendations, in whole or in part.

D. *Early Resumption of Work*: If at any time Engineer determines that Work in connection with the subsurface or physical condition in question may resume prior to completion of Engineer's review or Owner's issuance of its statement to Contractor, because the condition in question has been adequately documented, and analyzed on a preliminary basis, then the Engineer may at its discretion instruct Contractor to resume such Work.

Copyright© 2018 National Society of Professional Engineers, American Council of Engineering Companies, and American Society of Civil Engineers. All rights reserved.

E. *Possible Price and Times Adjustments*

1. Contractor shall be entitled to an equitable adjustment in Contract Price or Contract Times, to the extent that the existence of a differing subsurface or physical condition, or any related delay, disruption, or interference, causes an increase or decrease in Contractor's cost of, or time required for, performance of the Work; subject, however, to the following:

   a. Such condition must fall within any one or more of the categories described in Paragraph 5.04.A;

   b. With respect to Work that is paid for on a unit price basis, any adjustment in Contract Price will be subject to the provisions of Paragraph 13.03; and,

   c. Contractor's entitlement to an adjustment of the Contract Times is subject to the provisions of Paragraphs 4.05.D and 4.05.E.

2. Contractor shall not be entitled to any adjustment in the Contract Price or Contract Times with respect to a subsurface or physical condition if:

   a. Contractor knew of the existence of such condition at the time Contractor made a commitment to Owner with respect to Contract Price and Contract Times by the submission of a Bid or becoming bound under a negotiated contract, or otherwise;

   b. The existence of such condition reasonably could have been discovered or revealed as a result of any examination, investigation, exploration, test, or study of the Site and contiguous areas expressly required by the Bidding Requirements or Contract Documents to be conducted by or for Contractor prior to Contractor's making such commitment; or

   c. Contractor failed to give the written notice required by Paragraph 5.04.A.

3. If Owner and Contractor agree regarding Contractor's entitlement to and the amount or extent of any adjustment in the Contract Price or Contract Times, then any such adjustment will be set forth in a Change Order.

4. Contractor may submit a Change Proposal regarding its entitlement to or the amount or extent of any adjustment in the Contract Price or Contract Times, no later than 30 days after Owner's issuance of the Owner's written statement to Contractor regarding the subsurface or physical condition in question.

F. *Underground Facilities; Hazardous Environmental Conditions*: Paragraph 5.05 governs rights and responsibilities regarding the presence or location of Underground Facilities. Paragraph 5.06 governs rights and responsibilities regarding Hazardous Environmental Conditions. The provisions of Paragraphs 5.03 and 5.04 are not applicable to the presence or location of Underground Facilities, or to Hazardous Environmental Conditions.

5.05 Underground Facilities

A. *Contractor's Responsibilities*: Unless it is otherwise expressly provided in the General Conditions, the cost of all of the following are included in the Contract Price, and Contractor shall have full responsibility for:

1. reviewing and checking all information and data regarding existing Underground Facilities at the Site;

Copyright© 2018 National Society of Professional Engineers, American Council of Engineering Companies, and American Society of Civil Engineers. All rights reserved.

2. complying with applicable state and local utility damage prevention Laws and Regulations;
3. verifying the actual location of those Underground Facilities shown or indicated in the Contract Documents as being within the area affected by the Work, by exposing such Underground Facilities during the course of construction;
4. coordination of the Work with the owners (including Owner) of such Underground Facilities, during construction; and
5. the safety and protection of all existing Underground Facilities at the Site, and repairing any damage thereto resulting from the Work.

B. *Notice by Contractor*: If Contractor believes that an Underground Facility that is uncovered or revealed at the Site was not shown or indicated on the Drawings, or was not shown or indicated on the Drawings with reasonable accuracy, then Contractor shall, promptly after becoming aware thereof and before further disturbing conditions affected thereby or performing any Work in connection therewith (except in an emergency as required by Paragraph 7.15), notify Owner and Engineer in writing regarding such Underground Facility.

C. *Engineer's Review*: Engineer will:

1. promptly review the Underground Facility and conclude whether such Underground Facility was not shown or indicated on the Drawings, or was not shown or indicated with reasonable accuracy;
2. identify and communicate with the owner of the Underground Facility; prepare recommendations to Owner (and if necessary issue any preliminary instructions to Contractor) regarding the Contractor's resumption of Work in connection with the Underground Facility in question;
3. obtain any pertinent cost or schedule information from Contractor; determine the extent, if any, to which a change is required in the Drawings or Specifications to reflect and document the consequences of the existence or location of the Underground Facility; and
4. advise Owner in writing of Engineer's findings, conclusions, and recommendations.

During such time, Contractor shall be responsible for the safety and protection of such Underground Facility.

D. *Owner's Statement to Contractor Regarding Underground Facility*: After receipt of Engineer's written findings, conclusions, and recommendations, Owner shall issue a written statement to Contractor (with a copy to Engineer) regarding the Underground Facility in question addressing the resumption of Work in connection with such Underground Facility, indicating whether any change in the Drawings or Specifications will be made, and adopting or rejecting Engineer's written findings, conclusions, and recommendations in whole or in part.

E. *Early Resumption of Work*: If at any time Engineer determines that Work in connection with the Underground Facility may resume prior to completion of Engineer's review or Owner's issuance of its statement to Contractor, because the Underground Facility in question and conditions affected by its presence have been adequately documented, and analyzed on a preliminary basis, then the Engineer may at its discretion instruct Contractor to resume such Work.

Copyright© 2018 National Society of Professional Engineers, American Council of Engineering Companies, and American Society of Civil Engineers. All rights reserved.

F. *Possible Price and Times Adjustments*

1. Contractor shall be entitled to an equitable adjustment in the Contract Price or Contract Times, to the extent that any existing Underground Facility at the Site that was not shown or indicated on the Drawings, or was not shown or indicated with reasonable accuracy, or any related delay, disruption, or interference, causes an increase or decrease in Contractor's cost of, or time required for, performance of the Work; subject, however, to the following:

   a. With respect to Work that is paid for on a unit price basis, any adjustment in Contract Price will be subject to the provisions of Paragraph 13.03;

   b. Contractor's entitlement to an adjustment of the Contract Times is subject to the provisions of Paragraphs 4.05.D and 4.05.E; and

   c. Contractor gave the notice required in Paragraph 5.05.B.

2. If Owner and Contractor agree regarding Contractor's entitlement to and the amount or extent of any adjustment in the Contract Price or Contract Times, then any such adjustment will be set forth in a Change Order.

3. Contractor may submit a Change Proposal regarding its entitlement to or the amount or extent of any adjustment in the Contract Price or Contract Times, no later than 30 days after Owner's issuance of the Owner's written statement to Contractor regarding the Underground Facility in question.

4. The information and data shown or indicated on the Drawings with respect to existing Underground Facilities at the Site is based on information and data (a) furnished by the owners of such Underground Facilities, or by others, (b) obtained from available records, or (c) gathered in an investigation conducted in accordance with the current edition of ASCE 38, Standard Guideline for the Collection and Depiction of Existing Subsurface Utility Data, by the American Society of Civil Engineers. If such information or data is incorrect or incomplete, Contractor's remedies are limited to those set forth in this Paragraph 5.05.F.

5.06 Hazardous Environmental Conditions at Site

A. *Reports and Drawings*: These General Conditions identify:

1. those reports known to Owner relating to Hazardous Environmental Conditions that have been identified at or adjacent to the Site;

2. drawings known to Owner relating to Hazardous Environmental Conditions that have been identified at or adjacent to the Site; and

3. Technical Data contained in such reports and drawings.

4. The following table lists the reports known to Owner relating to Hazardous Environmental Conditions at or adjacent to the Site, and the Technical Data (if any) upon which Contractor may rely:

Report Title	Date of Report	Technical Data
No reports	N/A	N/A

Copyright© 2018 National Society of Professional Engineers, American Council of Engineering Companies, and American Society of Civil Engineers. All rights reserved.

5. The following table lists the drawings known to Owner relating to Hazardous Environmental Conditions at or adjacent to the Site, and Technical Data (if any) contained in such Drawings upon which Contractor may rely:

Drawings Title	Date of Drawings	Technical Data
No Drawings	N/A	N/A

B. *Reliance by Contractor on Technical Data Authorized*: Contractor may rely upon the accuracy of the Technical Data with respect to such reports and drawings, but such reports and drawings are not Contract Documents. If no such express identification has been made, then Contractor may rely on the accuracy of the Technical Data as defined in Paragraph 1.01.A.46.b. Except for such reliance on Technical Data, Contractor may not rely upon or make any claim against Owner or Engineer, or any of their officers, directors, members, partners, employees, agents, consultants, or subcontractors, with respect to:

1. the completeness of such reports and drawings for Contractor's purposes, including, but not limited to, any aspects of the means, methods, techniques, sequences and procedures of construction to be employed by Contractor, and safety precautions and programs incident thereto;

2. other data, interpretations, opinions, and information contained in such reports or shown or indicated in such drawings; or

3. any Contractor interpretation of or conclusion drawn from any Technical Data or any such other data, interpretations, opinions or information.

C. Contractor shall not be responsible for removing or remediating any Hazardous Environmental Condition encountered, uncovered, or revealed at the Site unless such removal or remediation is expressly identified in the Contract Documents to be within the scope of the Work.

D. Contractor shall be responsible for controlling, containing, and duly removing all Constituents of Concern brought to the Site by Contractor, Subcontractors, Suppliers, or anyone else for whom Contractor is responsible, and for any associated costs; and for the costs of removing and remediating any Hazardous Environmental Condition created by the presence of any such Constituents of Concern.

E. If Contractor encounters, uncovers, or reveals a Hazardous Environmental Condition whose removal or remediation is not expressly identified in the Contract Documents as being within the scope of the Work; or if Contractor or anyone for whom Contractor is responsible creates a Hazardous Environmental Condition, then Contractor shall immediately: (1) secure or otherwise isolate such condition; (2) stop all Work in connection with such condition and in any area affected thereby (except in an emergency as required by Paragraph 7.15); and (3) notify Owner and Engineer (and promptly thereafter confirm such notice in writing). Owner shall promptly consult with Engineer concerning the necessity for Owner to retain a qualified expert to evaluate such condition or take corrective action, if any. Promptly after consulting with Engineer, Owner shall take such actions as are necessary to permit Owner to timely obtain required permits and provide Contractor the written notice required by Paragraph 5.06.F. If Contractor or anyone for whom Contractor is responsible created the Hazardous Environmental Condition in question, then Owner may remove and remediate the

Copyright© 2018 National Society of Professional Engineers, American Council of Engineering Companies, and American Society of Civil Engineers. All rights reserved.

DocuSign Envelope ID: D92FB7CA-DD9A-40FF-B59F-20FB66385E4F

Hazardous Environmental Condition, and impose a set-off against payments to account for the associated costs.

F. Contractor shall not resume Work in connection with such Hazardous Environmental Condition or in any affected area until after Owner has obtained any required permits related thereto, and delivered written notice to Contractor either (1) specifying that such condition and any affected area is or has been rendered safe for the resumption of Work, or (2) specifying any special conditions under which such Work may be resumed safely.

G. If Owner and Contractor cannot agree as to entitlement to or on the amount or extent, if any, of any adjustment in Contract Price or Contract Times, as a result of such Work stoppage, such special conditions under which Work is agreed to be resumed by Contractor, or any costs or expenses incurred in response to the Hazardous Environmental Condition, then within 30 days of Owner's written notice regarding the resumption of Work, Contractor may submit a Change Proposal, or Owner may impose a set-off. Entitlement to any such adjustment is subject to the provisions of Paragraphs 4.05.D, 4.05.E, 11.07, and 11.08.

H. If, after receipt of such written notice, Contractor does not agree to resume such Work based on a reasonable belief it is unsafe, or does not agree to resume such Work under such special conditions, then Owner may order the portion of the Work that is in the area affected by such condition to be deleted from the Work, following the contractual change procedures in Article 11. Owner may have such deleted portion of the Work performed by Owner's own forces or others in accordance with Article 8.

I. To the fullest extent permitted by Laws and Regulations, Owner shall indemnify and hold harmless Contractor, Subcontractors, and Engineer, and the officers, directors, members, partners, employees, agents, consultants, and subcontractors of each and any of them, from and against all claims, costs, losses, and damages (including but not limited to all fees and charges of engineers, architects, attorneys, and other professionals, and all court, arbitration, or other dispute resolution costs) arising out of or relating to a Hazardous Environmental Condition, provided that such Hazardous Environmental Condition (1) was not shown or indicated in the Drawings, Specifications, or other Contract Documents, identified as Technical Data entitled to limited reliance pursuant to Paragraph 5.06.B, or identified in the Contract Documents to be included within the scope of the Work, and (2) was not created by Contractor or by anyone for whom Contractor is responsible. Nothing in this Paragraph 5.06.I obligates Owner to indemnify any individual or entity from and against the consequences of that individual's or entity's own negligence.

J. To the fullest extent permitted by Laws and Regulations, Contractor shall indemnify and hold harmless Owner and Engineer, and the officers, directors, members, partners, employees, agents, consultants, and subcontractors of each and any of them, from and against all claims, costs, losses, and damages (including but not limited to all fees and charges of engineers, architects, attorneys, and other professionals and all court or arbitration or other dispute resolution costs) arising out of or relating to the failure to control, contain, or remove a Constituent of Concern brought to the Site by Contractor or by anyone for whom Contractor is responsible, or to a Hazardous Environmental Condition created by Contractor or by anyone for whom Contractor is responsible. Nothing in this Paragraph 5.06.J obligates Contractor to indemnify any individual or entity from and against the consequences of that individual's or entity's own negligence.

Copyright© 2018 National Society of Professional Engineers, American Council of Engineering Companies, and American Society of Civil Engineers. All rights reserved.

K. The provisions of Paragraphs 5.03, 5.04, and 5.05 do not apply to the presence of Constituents of Concern or to a Hazardous Environmental Condition uncovered or revealed at the Site.

ARTICLE 6—BONDS AND INSURANCE

6.01 Performance, Payment, and Other Bonds

A. Bonds shall be furnished in accordance with the City of Sweet Home Contract requirements. These shall include, but not be limited to, performance bond and payment bond.

1. *Required Performance Bond Form:* The performance bond that Contractor furnishes will be in the form of EJCDC® C-610, Performance Bond (2010, 2013, or 2018 edition).

2. *Required Payment Bond Form:* The payment bond that Contractor furnishes will be in the form of EJCDC® C-615, Payment Bond (2010, 2013, or 2018 edition).

B. Contractor shall furnish a performance bond and a payment bond, each in an amount at least equal to the Contract Price, as security for the faithful performance and payment of Contractor's obligations under the Contract. These bonds must remain in effect until three years after the date when final payment becomes due or until completion of the correction period specified in Paragraph 15.08, whichever is later, except as provided otherwise by Laws or Regulations, the terms of a prescribed bond form, or other provisions of the Contract.

1. After Substantial Completion, Contractor shall furnish a warranty bond issued in the form of EJCDC® C-612, Warranty Bond (2018). The warranty bond must be in a bond amount of 10 percent of the final Contract Price. The warranty bond period will extend to a date one year after Substantial Completion of the Work. Contractor shall deliver the fully executed warranty bond to Owner prior to or with the final application for payment, and in any event no later than 11 months after Substantial Completion.

2. The warranty bond must be issued by the same surety that issues the performance bond required under Paragraph 6.01.A of the General Conditions.

C. All bonds must be in the form included in the Bidding Documents or otherwise specified by Owner prior to execution of the Contract, except as provided otherwise by Laws or Regulations, and must be issued and signed by a surety named in "Companies Holding Certificates of Authority as Acceptable Sureties on Federal Bonds and as Acceptable Reinsuring Companies" as published in Department Circular 570 (as amended and supplemented) by the Bureau of the Fiscal Service, U.S. Department of the Treasury. A bond signed by an agent or attorney-in-fact must be accompanied by a certified copy of that individual's authority to bind the surety. The evidence of authority must show that it is effective on the date the agent or attorney-in-fact signed the accompanying bond.

D. Contractor shall obtain the required bonds from surety companies that are duly licensed or authorized, in the state or jurisdiction in which the Project is located, to issue bonds in the required amounts.

E. If the surety on a bond furnished by Contractor is declared bankrupt or becomes insolvent, or the surety ceases to meet the requirements above, then Contractor shall promptly notify Owner and Engineer in writing and shall, within 20 days after the event giving rise to such notification, provide another bond and surety, both of which must comply with the bond and surety requirements above.

Copyright© 2018 National Society of Professional Engineers, American Council of Engineering Companies, and American Society of Civil Engineers. All rights reserved.

DocuSign Envelope ID: D92FB7CA-DD9A-40FF-B59F-20FB66385E4F

F. If Contractor has failed to obtain a required bond, Owner may exclude the Contractor from the Site and exercise Owner's termination rights under Article 16.

G. Upon request to Owner from any Subcontractor, Supplier, or other person or entity claiming to have furnished labor, services, materials, or equipment used in the performance of the Work, Owner shall provide a copy of the payment bond to such person or entity.

H. Upon request to Contractor from any Subcontractor, Supplier, or other person or entity claiming to have furnished labor, services, materials, or equipment used in the performance of the Work, Contractor shall provide a copy of the payment bond to such person or entity.

6.02 Insurance—General Provisions

A. Owner and Contractor shall obtain and maintain insurance as required in these contract documents and City of Sweet Home Special Provisions.

B. Contractor's insurance required by the Contract shall be primary over Owner's insurance and shall include a waiver of subrogation against Owner and Engineer.

C. All insurance required by the Contract to be purchased and maintained by Owner or Contractor shall be obtained from insurance companies that are duly licensed or authorized in the state or jurisdiction in which the Project is located to issue insurance policies for the required limits and coverages. All companies that provide insurance policies required under this Contract shall have an A.M. Best rating of A-VII or better.

D. Alternative forms of insurance coverage, including but not limited to self-insurance and "Occupational Accident and Excess Employer's Indemnity Policies," are not sufficient to meet the insurance requirements of this Contract.

E. Contractor shall deliver to Owner, with copies to each additional insured identified in the Contract, certificates of insurance and endorsements establishing that Contractor has obtained and is maintaining the policies and coverages required by the Contract. Upon request by Owner or any other insured, Contractor shall also furnish other evidence of such required insurance, including but not limited to copies of policies, documentation of applicable self-insured retentions (if allowed) and deductibles, full disclosure of all relevant exclusions, and evidence of insurance required to be purchased and maintained by Subcontractors or Suppliers. In any documentation furnished under this provision, Contractor, Subcontractors, and Suppliers may block out (redact) (1) any confidential premium or pricing information and (2) any wording specific to a project or jurisdiction other than those applicable to this Contract.

F. Owner shall deliver to Contractor, with copies to each additional insured identified in the Contract, certificates of insurance and endorsements establishing that Owner has obtained and is maintaining the policies and coverages required of Owner by the Contract (if any). Upon request by Contractor or any other insured, Owner shall also provide other evidence of such required insurance (if any), including but not limited to copies of policies, documentation of applicable self-insured retentions (if allowed) and deductibles, and full disclosure of all relevant exclusions. In any documentation furnished under this provision, Owner may block out (redact) (1) any confidential premium or pricing information and (2) any wording specific to a project or jurisdiction other than those relevant to this Contract.

G. Failure of Owner or Contractor to demand such certificates or other evidence of the Contractor's full compliance with these insurance requirements, or failure of Owner or

Copyright© 2018 National Society of Professional Engineers, American Council of Engineering Companies, and American Society of Civil Engineers. All rights reserved.

Contractor to identify a deficiency in compliance from the evidence provided, will not be construed as a waiver of the Contractor's obligation to obtain and maintain such insurance.

H. In addition to the liability insurance required to be provided by Contractor, the Owner, at Owner's option, may purchase and maintain Owner's own liability insurance. Owner's liability policies, if any, operate separately and independently from policies required to be provided by Contractor, and Contractor cannot rely upon Owner's liability policies for any of Contractor's obligations to the Owner, Engineer, or third parties.

I. Contractor shall require:

1. Subcontractors to purchase and maintain worker's compensation, commercial general liability, and other insurance that is appropriate for their participation in the Project, and to name as additional insureds Owner and Engineer (and any other individuals or entities identified in the General Conditions as additional insureds on Contractor's liability policies) on each Subcontractor's commercial general liability insurance policy; and

2. Suppliers to purchase and maintain insurance that is appropriate for their participation in the Project.

J. If either party does not purchase or maintain the insurance required of such party by the Contract, such party shall notify the other party in writing of such failure to purchase prior to the start of the Work, or of such failure to maintain prior to any change in the required coverage.

K. If Contractor has failed to obtain and maintain required insurance, Contractor's entitlement to enter or remain at the Site will end immediately, and Owner may impose an appropriate set-off against payment for any associated costs (including but not limited to the cost of purchasing necessary insurance coverage), and exercise Owner's termination rights under Article 16.

L. Without prejudice to any other right or remedy, if a party has failed to obtain required insurance, the other party may elect (but is in no way obligated) to obtain equivalent insurance to protect such other party's interests at the expense of the party who was required to provide such coverage, and the Contract Price will be adjusted accordingly.

M. Owner does not represent that insurance coverage and limits established in this Contract necessarily will be adequate to protect Contractor or Contractor's interests. Contractor is responsible for determining whether such coverage and limits are adequate to protect its interests, and for obtaining and maintaining any additional insurance that Contractor deems necessary.

N. The insurance and insurance limits required herein will not be deemed as a limitation on Contractor's liability, or that of its Subcontractors or Suppliers, under the indemnities granted to Owner and other individuals and entities in the Contract or otherwise.

O. All the policies of insurance required to be purchased and maintained under this Contract will contain a provision or endorsement that the coverage afforded will not be canceled, or renewal refused, until at least 10 days prior written notice has been given to the purchasing policyholder. Within three days of receipt of any such written notice, the purchasing policyholder shall provide a copy of the notice to each additional insured.

Copyright© 2018 National Society of Professional Engineers, American Council of Engineering Companies, and American Society of Civil Engineers. All rights reserved.

6.03 Contractor's Insurance

A. *Required Insurance*: Contractor shall purchase and maintain Worker's Compensation, Commercial General Liability, Builders Risk and other insurance pursuant to the specific requirements set forth herein.

B. *General Provisions*: The policies of insurance required by this Paragraph 6.03 must:

1. include at least the specific coverages required;
2. be written for not less than the limits provided, or those required by Laws or Regulations, whichever is greater;
3. remain in effect at least until the Work is complete (as set forth in Paragraph 15.06.D), and longer if expressly required elsewhere in this Contract, and at all times thereafter when Contractor may be correcting, removing, or replacing defective Work as a warranty or correction obligation, or otherwise, or returning to the Site to conduct other tasks arising from the Contract;
4. apply with respect to the performance of the Work, whether such performance is by Contractor, any Subcontractor or Supplier, or by anyone directly or indirectly employed by any of them to perform any of the Work, or by anyone for whose acts any of them may be liable; and
5. include all necessary endorsements to support the stated requirements.

C. *Additional Insureds*: The Contractor's commercial general liability, automobile liability, employer's liability, umbrella or excess, pollution liability, and unmanned aerial vehicle liability policies, if required by this Contract, must:

1. include and list as additional insureds the following:
   a. OWNER: "City of Sweet Home, its officers, employees, agents, and consultants"; AND
   b. ENGINEER: "West Yost Associates Inc., its officers, employees, agents, and consultants"; AND
   c. any individuals or entities identified as additional insureds herein.
2. afford primary coverage to these additional insureds for all claims covered thereby (including as applicable those arising from both ongoing and completed operations);
3. not seek contribution from insurance maintained by the additional insured; and
4. as to commercial general liability insurance, apply to additional insureds with respect to liability caused in whole or in part by Contractor's acts or omissions, or the acts and omissions of those working on Contractor's behalf, in the performance of Contractor's operations.

D. Other Additional Insureds: As a supplement to the provisions of Paragraph 6.03.C of the General Conditions, the commercial general liability, automobile liability, umbrella or excess, pollution liability, and unmanned aerial vehicle liability policies must include as additional insureds the Owner and Engineer.

E. *Workers' Compensation and Employer's Liability Insurance:* Contractor shall purchase and maintain Worker's Compensation and Employer's Liability Insurance. This insurance shall protect CONTRACTOR against all claims under applicable state workers' compensation laws,

Copyright© 2018 National Society of Professional Engineers, American Council of Engineering Companies, and American Society of Civil Engineers. All rights reserved.

including coverage as necessary for the benefits provided under the United States Longshoremen's and Harbor Workers' Act and the Jones Act. CONTRACTOR shall also be protected against claims for injury, disease, or death of employees which, for any reason, may not fall within the provisions of a workers' compensation law. This policy shall include an "all states" or "other states" and waiver of subrogation endorsements. The liability limits, as required by state law shall be not less than:

1. Workers' Compensation: Statutory
2. Employer's Liability: $1,000,000 each occurrence

F. *Commercial General Liability—Claims Covered:* Contractor shall purchase and maintain commercial general liability insurance, covering all operations by or on behalf of Contractor, on an occurrence basis, against claims for:

1. damages because of bodily injury, sickness or disease, or death of any person other than Contractor's employees,
2. damages insured by reasonably available personal injury liability coverage, and
3. damages because of injury to or destruction of tangible property wherever located, including loss of use resulting therefrom.

G. *Commercial General Liability—Form and Content:* Contractor's commercial liability policy must be written on a 1996 (or later) Insurance Services Organization, Inc. (ISO) commercial general liability form (occurrence form) and include the following coverages and endorsements:

1. Products and completed operations coverage.
   a. Such insurance must be maintained for three years after final payment.
   b. Contractor shall furnish Owner and each other additional insured (as identified in the General Conditions or elsewhere in the Contract) evidence of continuation of such insurance at final payment and three years thereafter.
2. Blanket contractual liability coverage, including but not limited to coverage of Contractor's contractual indemnity obligations in Paragraph 7.18.
3. Severability of interests and no insured-versus-insured or cross-liability exclusions.
4. Underground, explosion, and collapse coverage.
5. Personal injury coverage.
6. Additional insured endorsements that include both ongoing operations and products and completed operations coverage through ISO Endorsements CG 20 10 10 01 and CG 20 37 10 01 (together). If Contractor demonstrates to Owner that the specified ISO endorsements are not commercially available, then Contractor may satisfy this requirement by providing equivalent endorsements.
7. For design professional additional insureds, ISO Endorsement CG 20 32 07 04 "Additional Insured—Engineers, Architects or Surveyors Not Engaged by the Named Insured" or its equivalent.

H. *Commercial General Liability Insurance Coverage:* This insurance shall be occurrence type written in comprehensive form and shall protect CONTRACTOR, OWNER, and ENGINEER as

Copyright© 2018 National Society of Professional Engineers, American Council of Engineering Companies, and American Society of Civil Engineers. All rights reserved.

additional insureds, against claims arising out of performance of the Work. The policy shall also include personal injury liability coverage, contractual liability coverage, completed operations and products liability coverage, and coverage for blasting, explosion, collapse of buildings, and damage to underground property. The liability limits for bodily injury and property damage shall be not less than:

1. Combined Single Limit for each occurrence: $2,000,000
2. General aggregate: $2,000,000

I. *Automobile Liability:* Contractor shall purchase and maintain automobile liability insurance for damages because of bodily injury or death of any person or property damage arising out of the ownership, maintenance, or use of any motor vehicle. The automobile liability policy must be written on an occurrence basis.

Automobile Liability	Policy limits of not less than:
Bodily Injury	
Each Person	$1,000,000
Each Accident	$1,000,000
Property Damage	
Each Accident	$1,000,000
[or]	
Combined Single Limit	
Combined Single Limit (Bodily Injury and Property Damage)	$2,000,000

J. Umbrella Liability Insurance: Contractor shall purchase and maintain umbrella liability insurance. This insurance shall protect CONTRACTOR, OWNER, and ENGINEER as additional insureds, against claims in excess of the limits provided under workers' compensation and employer's liability, comprehensive automobile liability, and commercial general liability policies. The umbrella policy shall follow the form of the primary insurance, including the application of the primary limits. The liability limits for bodily injury and property damage shall be not less than:

1. Combined Single Limit for each occurrence: $5,000,000
2. General aggregate: $5,000,000

K. *Pollution Liability Insurance:* If not otherwise included in the Contractor's Commercial General Liability Insurance coverage, Contractor shall purchase and maintain pollution liability insurance for claims arising from the discharge, dispersal, release, escape of any irritant or contaminant into or upon land, any structure, the atmosphere, watercourse, or body of water including groundwater. This shall include coverage for claims of: (a) clean up, either on-site or off site; (b) third party liability, including bodily injury, property damage, natural resource damage, third party property loss of use/revenue, and clean up; and/or (c) costs incurred for regulatory fines and/or the investigation, defense, or settlement of claims. The liability limits for pollution shall not be less than:

1. Combined Single Limit for each occurrence: $5,000,000
2. General aggregate: $5,000,000

L. *Railroad Protective Liability Insurance:* Prior to commencing any Work within 50 feet of railroad-owned and controlled property, Contractor shall (1) endorse its commercial general liability policy with ISO CG 24 17, removing the contractual liability exclusion for work within

Copyright© 2018 National Society of Professional Engineers, American Council of Engineering Companies, and American Society of Civil Engineers. All rights reserved.

50 feet of a railroad, (2) purchase and maintain railroad protective liability insurance meeting the following requirements, (3) furnish a copy of the endorsement to Owner, and (4) submit a copy of the railroad protective policy and other railroad-required documentation to the railroad, and notify Owner of such submittal.

Railroad Protective Liability Insurance	Policy limits of not less than:
Each Claim	$ 1,000,000
Aggregate	$ 2,000,000

M. *Unmanned Aerial Vehicle Liability Insurance:* If Contractor uses unmanned aerial vehicles (UAV—commonly *referred* to as drones) at the Site or in support of any aspect of the Work, Contractor shall obtain UAV liability insurance in the amounts stated; name Owner, Engineer, and all individuals and entities identified in the General Conditions as additional insureds; and provide a certificate to Owner confirming Contractor's compliance with this requirement. Such insurance will provide coverage for property damage, bodily injury or death, and invasion of privacy.

Unmanned Aerial Vehicle Liability Insurance	Policy limits of not less than:
Each Claim	$ 100,000
General Aggregate	$ 250,000

6.04 Builder's Risk and Other Property Insurance

A. *Builder's Risk*: Contractor shall purchase and maintain builder's risk insurance upon the Work on a completed value basis, in the amount of the Work's full insurable replacement cost (subject to such deductible amounts as may be provided in the General Conditions or required by Laws and Regulations). The specific requirements applicable to the builder's risk insurance are set forth in the General Conditions.

B. *Property Insurance for Facilities of Owner Where Work Will Occur*: Owner is responsible for obtaining and maintaining property insurance covering each existing structure, building, or facility in which any part of the Work will occur, or to which any part of the Work will attach or be adjoined. Such property insurance will be written on a special perils (all-risk) form, on a replacement cost basis, providing coverage consistent with that required for the builder's risk insurance, and will be maintained until the Work is complete, as set forth in Paragraph 15.06.D.

C. *Property Insurance for Substantially Complete Facilities*: Promptly after Substantial Completion, and before actual occupancy or use of the substantially completed Work, Owner will obtain property insurance for such substantially completed Work, and maintain such property insurance at least until the Work is complete, as set forth in Paragraph 15.06.D. Such property insurance will be written on a special perils (all-risk) form, on a replacement cost basis, and provide coverage consistent with that required for the builder's risk insurance. The builder's risk insurance may terminate upon written confirmation of Owner's procurement of such property insurance.

D. *Partial Occupancy or Use by Owner*: If Owner will occupy or use a portion or portions of the Work prior to Substantial Completion of all the Work, as provided in Paragraph 15.04, then Owner (directly, if it is the purchaser of the builder's risk policy, or through Contractor) will provide advance notice of such occupancy or use to the builder's risk insurer, and obtain an

Copyright© 2018 National Society of Professional Engineers, American Council of Engineering Companies, and American Society of Civil Engineers. All rights reserved.

endorsement consenting to the continuation of coverage prior to commencing such partial occupancy or use.

E. *Insurance of Other Property; Additional Insurance*: If the express insurance provisions of the Contract do not require or address the insurance of a property item or interest, then the entity or individual owning such property item will be responsible for insuring it. If Contractor elects to obtain other special insurance to be included in or supplement the builder's risk or property insurance policies provided under this Paragraph 6.04, it may do so at Contractor's expense.

F. *Builder's Risk Requirements:* The builder's risk insurance must:

1. be written on a builder's risk "all risk" policy form that at a minimum includes insurance for physical loss or damage to the Work, temporary buildings, falsework, and materials and equipment stored and in transit, and must not exclude the coverage of the following risks: fire; windstorm; hail; flood; earthquake, volcanic activity, and other earth movement; lightning; riot; civil commotion; terrorism; vehicle impact; aircraft; smoke; theft; vandalism and malicious mischief; mechanical breakdown, boiler explosion, and artificially generated electric current; collapse; explosion; debris removal; demolition occasioned by enforcement of Laws and Regulations; and water damage (other than that caused by flood).

    a. Such policy will include an exception that results in coverage for ensuing losses from physical damage or loss with respect to any defective workmanship, methods, design, or materials exclusions.

    b. If insurance against mechanical breakdown, boiler explosion, and artificially generated electric current; earthquake, volcanic activity, and other earth movement; or flood, are not commercially available under builder's risk policies, by endorsement or otherwise, such insurance will be provided through other insurance policies acceptable to Owner and Contractor.

2. cover, as insured property, at least the following: (a) the Work and all materials, supplies, machinery, apparatus, equipment, fixtures, and other property of a similar nature that are to be incorporated into or used in the preparation, fabrication, construction, erection, or completion of the Work, including Owner-furnished or assigned property; (b) spare parts inventory required within the scope of the Contract; and (c) temporary works which are not intended to form part of the permanent constructed Work but which are intended to provide working access to the Site, or to the Work under construction, or which are intended to provide temporary support for the Work under construction, including scaffolding, form work, fences, shoring, falsework, and temporary structures.

3. cover expenses incurred in the repair or replacement of any insured property (including but not limited to fees and charges of contractors, engineers, and architects).

4. extend to cover damage or loss to insured property while in temporary storage at the Site or in a storage location outside the Site (but not including property stored at the premises of a manufacturer or Supplier). If this coverage is subject to a sublimit, such sublimit will be a minimum of $2,000,000.

5. extend to cover damage or loss to insured property while in transit. If this coverage is subject to a sublimit, such sublimit will be a minimum of $2,000,000.

6. allow for the waiver of the insurer's subrogation rights, as set forth in this Contract.

Copyright© 2018 National Society of Professional Engineers, American Council of Engineering Companies, and American Society of Civil Engineers. All rights reserved.

7. allow for partial occupancy or use by Owner by endorsement, and without cancellation or lapse of coverage.

8. include performance/hot testing and start-up, if applicable.

9. be maintained in effect until the Work is complete, as set forth in Paragraph 15.06.D of the General Conditions, or until written confirmation of Owner's procurement of property insurance following Substantial Completion, whichever occurs first.

10 include as named insureds the Owner, Contractor, Subcontractors (of every tier), and any other individuals or entities required by this Contract to be insured under such builder's risk policy. Parties required to be insured will be referred to collectively as "insureds." In addition to Owner, Contractor, and Subcontractors of every tier, include as insureds the following:

   a. West Yost Associates, Inc.
      Charles Duncan, President
      2020 Research Park Drive, Suite 100
      Davis, CA 95618
      503.756.5905; CDuncan@westyost.com

11. include, in addition to the Contract Price amount, the value of the following equipment and materials to be installed by the Contractor but furnished by the Owner or third parties:

   a. Electrical motor control centers, control panels and other equipment to be supplied by Owner's Integrator-of-Record, such sublimit will be a minimum of $3,000,000.

12. If debris removal in connection with repair or replacement of insured property is subject to a coverage sublimit, such sublimit will be a minimum of $5,000,000.

6.05 Property Losses; Subrogation

A. The builder's risk insurance policy purchased and maintained, at Contactor's expense, in accordance with Paragraph 6.04 (or an installation floater policy if authorized), will contain provisions to the effect that in the event of payment of any loss or damage the insurer will have no rights of recovery against any insureds thereunder, or against Engineer or its consultants, or their officers, directors, members, partners, employees, agents, consultants, or subcontractors.

   1. Owner and Contractor waive all rights against each other and the respective officers, directors, members, partners, employees, agents, consultants, and subcontractors of each and any of them, for all losses and damages caused by, arising out of, or resulting from any of the perils, risks, or causes of loss covered by such policies and any other property insurance applicable to the Work; and, in addition, waive all such rights against Engineer, its consultants, all individuals or entities identified in the General Conditions as builder's risk or installation floater insureds, and the officers, directors, members, partners, employees, agents, consultants, and subcontractors of each and any of them, under such policies for losses and damages so caused.

   2. None of the above waivers extends to the rights that any party making such waiver may have to the proceeds of insurance held by Owner or Contractor as trustee or fiduciary, or otherwise payable under any policy so issued.

Copyright© 2018 National Society of Professional Engineers, American Council of Engineering Companies, and American Society of Civil Engineers. All rights reserved.

B. Any property insurance policy maintained by Owner covering any loss, damage, or consequential loss to Owner's existing structures, buildings, or facilities in which any part of the Work will occur, or to which any part of the Work will attach or adjoin; to adjacent structures, buildings, or facilities of Owner; or to part or all of the completed or substantially completed Work, during partial occupancy or use pursuant to Paragraph 15.04, after Substantial Completion pursuant to Paragraph 15.03, or after final payment pursuant to Paragraph 15.06, will contain provisions to the effect that in the event of payment of any loss or damage the insurer will have no rights of recovery against any insureds thereunder, or against Contractor, Subcontractors, or Engineer, or the officers, directors, members, partners, employees, agents, consultants, or subcontractors of each and any of them, and that the insured is allowed to waive the insurer's rights of subrogation in a written contract executed prior to the loss, damage, or consequential loss.

1. Owner waives all rights against Contractor, Subcontractors, and Engineer, and the officers, directors, members, partners, employees, agents, consultants and subcontractors of each and any of them, for all losses and damages caused by, arising out of, or resulting from fire or any of the perils, risks, or causes of loss covered by such policies.

C. The waivers in this Paragraph 6.05 include the waiver of rights due to business interruption, loss of use, or other consequential loss extending beyond direct physical loss or damage to Owner's property or the Work caused by, arising out of, or resulting from fire or other insured peril, risk, or cause of loss.

D. Contractor shall be responsible for assuring that each Subcontract contains provisions whereby the Subcontractor waives all rights against Owner, Contractor, all individuals or entities identified in the General Conditions as insureds, the Engineer and its consultants, and the officers, directors, members, partners, employees, agents, consultants, and subcontractors of each and any of them, for all losses and damages caused by, arising out of, relating to, or resulting from fire or other peril, risk, or cause of loss covered by builder's risk insurance, installation floater, and any other property insurance applicable to the Work.

6.06 Receipt and Application of Property Insurance Proceeds

A. Any insured loss under the builder's risk and other policies of property insurance required by Paragraph 6.04 will be adjusted and settled with the Contractor and Owner. Contractor and Owner shall act as fiduciary for the other insureds, and give notice to such other insureds that adjustment and settlement of a claim is in progress. Any other insured may state its position regarding a claim for insured loss in writing within 15 days after notice of such claim.

B. Proceeds for such insured losses may be made payable by the insurer to the Contractor and Owner as the fiduciary for other insureds, subject to the requirements of any applicable mortgage clause. Contractor and Owner receiving insurance proceeds under the builder's risk and other policies of insurance required by Paragraph 6.04 shall maintain such proceeds in a segregated account, and distribute such proceeds in accordance with such agreement as the parties in interest may reach, or as otherwise required under the dispute resolution provisions of this Contract or applicable Laws and Regulations.

C. If no other special agreement is reached, Contractor shall repair or replace the damaged Work, using allocated insurance proceeds.

Copyright© 2018 National Society of Professional Engineers, American Council of Engineering Companies, and American Society of Civil Engineers. All rights reserved.

ARTICLE 7—CONTRACTOR'S RESPONSIBILITIES

7.01 Contractor's Means and Methods of Construction

A. Contractor shall be solely responsible for the means, methods, techniques, sequences, and procedures of construction.

B. If the Contract Documents note, or Contractor determines, that professional engineering or other design services are needed to carry out Contractor's responsibilities for construction means, methods, techniques, sequences, and procedures, or for Site safety, then Contractor shall cause such services to be provided by a properly licensed design professional, at Contractor's expense. Such services are not Owner-delegated professional design services under this Contract, and neither Owner nor Engineer has any responsibility with respect to (1) Contractor's determination of the need for such services, (2) the qualifications or licensing of the design professionals retained or employed by Contractor, (3) the performance of such services, or (4) any errors, omissions, or defects in such services.

7.02 Supervision and Superintendence

A. Contractor shall supervise, inspect, and direct the Work competently and efficiently, devoting such attention thereto and applying such skills and expertise as may be necessary to perform the Work in accordance with the Contract Documents.

B. At all times during the progress of the Work, Contractor shall assign a competent resident superintendent who will not be replaced without written notice to Owner and Engineer except under extraordinary circumstances.

7.03 Labor; Working Hours

A. Contractor shall provide competent, suitably qualified personnel to survey and lay out the Work and perform construction as required by the Contract Documents. Contractor shall maintain good discipline and order at the Site.

B. Contractor shall be fully responsible to Owner and Engineer for all acts and omissions of Contractor's employees; of Suppliers and Subcontractors, and their employees; and of any other individuals or entities performing or furnishing any of the Work, just as Contractor is responsible for Contractor's own acts and omissions.

C. Except as otherwise required for the safety or protection of persons or the Work or property at the Site or adjacent thereto, and except as otherwise stated in the Contract Documents, all Work at the Site will be performed during regular working hours, Monday through Friday. Contractor will not perform Work on a Saturday, Sunday, or any legal holiday. Contractor may perform Work outside regular working hours or on Saturdays, Sundays, or legal holidays only with Owner's written consent, which will not be unreasonably withheld.

1. Regular working hours will be 7:00 AM to 3:30 PM, local time. Contractor shall limit noise and equipment operation for all construction activities outside of the Regular working hours unless otherwise allowed in writing by the Owner.

2. Owner's legal holidays are New Year's Day, President's Day, Memorial Day, Independence Day, Labor Day, Veteran's Day, Thanksgiving Day, the Day after Thanksgiving, and Christmas Day. When a holiday falls on Saturday it shall be observed on the preceding Friday. When a holiday falls on Sunday it shall be observed on the following Monday.

Copyright© 2018 National Society of Professional Engineers, American Council of Engineering Companies, and American Society of Civil Engineers. All rights reserved.

D. Contractor shall be responsible for the cost of any overtime pay or other expense incurred by the Owner for Engineer's services (including those of the Resident Project Representative, if any), Owner's representative, and construction observation services, occasioned by the performance of Work on Saturday, Sunday, any legal holiday, or as overtime on any regular work day. If Contractor is responsible but does not pay, or if the parties are unable to agree as to the amount owed, then Owner may impose a reasonable set-off against payments due under Article 15.

7.04 Services, Materials, and Equipment

A. Unless otherwise specified in the Contract Documents, Contractor shall provide and assume full responsibility for all services, materials, equipment, labor, transportation, construction equipment and machinery, tools, appliances, fuel, power, light, heat, telephone, water, sanitary facilities, temporary facilities, and all other facilities and incidentals necessary for the performance, testing, start up, and completion of the Work, whether or not such items are specifically called for in the Contract Documents.

B. All materials and equipment incorporated into the Work must be new and of good quality, except as otherwise provided in the Contract Documents. All special warranties and guarantees required by the Specifications will expressly run to the benefit of Owner. If required by Engineer, Contractor shall furnish satisfactory evidence (including reports of required tests) as to the source, kind, and quality of materials and equipment.

C. All materials and equipment must be stored, applied, installed, connected, erected, protected, used, cleaned, and conditioned in accordance with instructions of the applicable Supplier, except as otherwise may be provided in the Contract Documents.

D. Contractor shall be responsible for the cost of any overtime pay or other expense incurred by the Owner for Engineer's services (including those of the Resident Project Representative, if any), Owner's representative, and construction observation services, occasioned by the performance of Work on Saturday, Sunday, any legal holiday, or as overtime on any regular work day. If Contractor is responsible but does not pay, or if the parties are unable to agree as to the amount owed, then Owner may impose a reasonable set-off against payments due under Article 15.

7.05 "Or Equals"

A. *Contractor's Request; Governing Criteria*: Whenever an item of equipment or material is specified or described in the Contract Documents by using the names of one or more proprietary items or specific Suppliers, the Contract Price has been based upon Contractor furnishing such item as specified. The specification or description of such an item is intended to establish the type, function, appearance, and quality required. Unless the specification or description contains or is followed by words reading that no like, equivalent, or "or equal" item is permitted, Contractor may request that Engineer authorize the use of other items of equipment or material, or items from other proposed Suppliers, under the circumstances described below.

1. If Engineer in its sole discretion determines that an item of equipment or material proposed by Contractor is functionally equal to that named and sufficiently similar so that no change in related Work will be required, Engineer will deem it an "or equal" item. For

Copyright© 2018 National Society of Professional Engineers, American Council of Engineering Companies, and American Society of Civil Engineers. All rights reserved.

the purposes of this paragraph, a proposed item of equipment or material will be considered functionally equal to an item so named if:

a. in the exercise of reasonable judgment Engineer determines that the proposed item:

1) is at least equal in materials of construction, quality, durability, appearance, strength, and design characteristics;

2) will reliably perform at least equally well the function and achieve the results imposed by the design concept of the completed Project as a functioning whole;

3) has a proven record of performance and availability of responsive service; and

4) is not objectionable to Owner.

b. Contractor certifies that, if the proposed item is approved and incorporated into the Work:

1) there will be no increase in cost to the Owner or increase in Contract Times; and

2) the item will conform substantially to the detailed requirements of the item named in the Contract Documents.

B. *Contractor's Expense*: Contractor shall provide all data in support of any proposed "or equal" item at Contractor's expense.

C. *Engineer's Evaluation and Determination*: Engineer will be allowed a reasonable time to evaluate each "or-equal" request. Engineer may require Contractor to furnish additional data about the proposed "or-equal" item. Engineer will be the sole judge of acceptability. No "or-equal" item will be ordered, furnished, installed, or utilized until Engineer's review is complete and Engineer determines that the proposed item is an "or-equal," which will be evidenced by an approved Shop Drawing or other written communication. Engineer will advise Contractor in writing of any negative determination.

D. *Effect of Engineer's Determination*: Neither approval nor denial of an "or-equal" request will result in any change in Contract Price. The Engineer's denial of an "or-equal" request will be final and binding, and may not be reversed through an appeal under any provision of the Contract.

E. *Treatment as a Substitution Request*: If Engineer determines that an item of equipment or material proposed by Contractor does not qualify as an "or-equal" item, Contractor may request that Engineer consider the item a proposed substitute pursuant to Paragraph 7.06.

7.06 Substitutes

A. *Contractor's Request; Governing Criteria*: Unless the specification or description of an item of equipment or material required to be furnished under the Contract Documents contains or is followed by words reading that no substitution is permitted, Contractor may request that Engineer authorize the use of other items of equipment or material under the circumstances described below. To the extent possible such requests must be made before commencement of related construction at the Site.

1. Contractor shall submit sufficient information as provided below to allow Engineer to determine if the item of material or equipment proposed is functionally equivalent to that named and an acceptable substitute therefor. Engineer will not accept requests for

Copyright© 2018 National Society of Professional Engineers, American Council of Engineering Companies, and American Society of Civil Engineers. All rights reserved.

review of proposed substitute items of equipment or material from anyone other than Contractor.

2. The requirements for review by Engineer will be as set forth in Paragraph 7.06.B, as supplemented by the Specifications, and as Engineer may decide is appropriate under the circumstances.

3. Contractor shall make written application to Engineer for review of a proposed substitute item of equipment or material that Contractor seeks to furnish or use. The application:

   a. will certify that the proposed substitute item will:

      1) perform adequately the functions and achieve the results called for by the general design;

      2) be similar in substance to the item specified; and

      3) be suited to the same use as the item specified.

   b. will state:

      1) the extent, if any, to which the use of the proposed substitute item will necessitate a change in Contract Times;

      2) whether use of the proposed substitute item in the Work will require a change in any of the Contract Documents (or in the provisions of any other direct contract with Owner for other work on the Project) to adapt the design to the proposed substitute item; and

      3) whether incorporation or use of the proposed substitute item in connection with the Work is subject to payment of any license fee or royalty.

   c. will identify:

      1) all variations of the proposed substitute item from the item specified; and

      2) available engineering, sales, maintenance, repair, and replacement services.

   d. will contain an itemized estimate of all costs or credits that will result directly or indirectly from use of such substitute item, including but not limited to changes in Contract Price, shared savings, costs of redesign, and claims of other contractors affected by any resulting change.

B. *Engineer's Evaluation and Determination*: Engineer will be allowed a reasonable time to evaluate each substitute request, and to obtain comments and direction from Owner. Engineer may require Contractor to furnish additional data about the proposed substitute item. Engineer will be the sole judge of acceptability. No substitute will be ordered, furnished, installed, or utilized until Engineer's review is complete and Engineer determines that the proposed item is an acceptable substitute. Engineer's determination will be evidenced by a Field Order or a proposed Change Order accounting for the substitution itself and all related impacts, including changes in Contract Price or Contract Times. Engineer will advise Contractor in writing of any negative determination.

C. *Special Guarantee*: Owner may require Contractor to furnish at Contractor's expense a special performance guarantee or other surety with respect to any substitute.

Copyright© 2018 National Society of Professional Engineers, American Council of Engineering Companies, and American Society of Civil Engineers. All rights reserved.

D. *Reimbursement of Engineer's Cost*: Engineer will record Engineer's costs in evaluating a substitute proposed or submitted by Contractor. Whether or not Engineer approves a substitute so proposed or submitted by Contractor, Contractor shall reimburse Owner for the reasonable charges of Engineer for evaluating each such proposed substitute. Contractor shall also reimburse Owner for the reasonable charges of Engineer for making changes in the Contract Documents (or in the provisions of any other direct contract with Owner) resulting from the acceptance of each proposed substitute.

E. *Contractor's Expense*: Contractor shall provide all data in support of any proposed substitute at Contractor's expense.

F. *Effect of Engineer's Determination*: If Engineer approves the substitution request, Contractor shall execute the proposed Change Order and proceed with the substitution. The Engineer's denial of a substitution request will be final and binding, and may not be reversed through an appeal under any provision of the Contract. Contractor may challenge the scope of reimbursement costs imposed under Paragraph 7.06.D, by timely submittal of a Change Proposal.

7.07 Concerning Subcontractors and Suppliers

A. Contractor may retain Subcontractors and Suppliers for the performance of parts of the Work. Such Subcontractors and Suppliers must be acceptable to Owner. The Contractor's retention of a Subcontractor or Supplier for the performance of parts of the Work will not relieve Contractor's obligation to Owner to perform and complete the Work in accordance with the Contract Documents.

B. Contractor shall retain specific Subcontractors and Suppliers for the performance of designated parts of the Work if required by the Contract to do so.

C. Subsequent to the submittal of Contractor's Bid or final negotiation of the terms of the Contract, Owner may not require Contractor to retain any Subcontractor or Supplier to furnish or perform any of the Work against which Contractor has reasonable objection.

D. Prior to entry into any binding subcontract or purchase order, Contractor shall submit to Owner the identity of the proposed Subcontractor or Supplier (unless Owner has already deemed such proposed Subcontractor or Supplier acceptable during the bidding process or otherwise). Such proposed Subcontractor or Supplier shall be deemed acceptable to Owner unless Owner raises a substantive, reasonable objection within 5 days.

E. Owner may require the replacement of any Subcontractor or Supplier. Owner also may require Contractor to retain specific replacements; provided, however, that Owner may not require a replacement to which Contractor has a reasonable objection. If Contractor has submitted the identity of certain Subcontractors or Suppliers for acceptance by Owner, and Owner has accepted it (either in writing or by failing to make written objection thereto), then Owner may subsequently revoke the acceptance of any such Subcontractor or Supplier so identified solely on the basis of substantive, reasonable objection after due investigation. Contractor shall submit an acceptable replacement for the rejected Subcontractor or Supplier.

F. If Owner requires the replacement of any Subcontractor or Supplier retained by Contractor to perform any part of the Work, then Contractor shall be entitled to an adjustment in Contract Price or Contract Times, with respect to the replacement; and Contractor shall

Copyright© 2018 National Society of Professional Engineers, American Council of Engineering Companies, and American Society of Civil Engineers. All rights reserved.

initiate a Change Proposal for such adjustment within 30 days of Owner's requirement of replacement.

G. No acceptance by Owner of any such Subcontractor or Supplier, whether initially or as a replacement, will constitute a waiver of the right of Owner to the completion of the Work in accordance with the Contract Documents.

H. On a monthly basis, Contractor shall submit to Engineer a complete list of all Subcontractors and Suppliers having a direct contract with Contractor, and of all other Subcontractors and Suppliers known to Contractor at the time of submittal.

I. Contractor shall be solely responsible for scheduling and coordinating the work of Subcontractors and Suppliers.

J. The divisions and sections of the Specifications and the identifications of any Drawings do not control Contractor in dividing the Work among Subcontractors or Suppliers, or in delineating the Work to be performed by any specific trade.

K. All Work performed for Contractor by a Subcontractor or Supplier must be pursuant to an appropriate contractual agreement that specifically binds the Subcontractor or Supplier to the applicable terms and conditions of the Contract for the benefit of Owner and Engineer.

L. Owner may furnish to any Subcontractor or Supplier, to the extent practicable, information about amounts paid to Contractor for Work performed for Contractor by the Subcontractor or Supplier.

M. Contractor shall restrict all Subcontractors and Suppliers from communicating with Engineer or Owner, except through Contractor or in case of an emergency, or as otherwise expressly allowed in this Contract.

N. The Contractor shall include the following provisions in all its first-tier subcontracts and contracts with material suppliers:

1. A clause that requires the subcontractor to pay its subcontractors or material suppliers within 10 days after the contractor receives payment from the public agency for satisfactory work performed as required by Oregon's Prompt Payment statutes.

2. A clause that requires the subcontractor to provide a first-tier subcontractor with a standard form that the first-tier subcontractor may use as an application for payment or another method the subcontractor may use for requesting payment and to use that form and regular administrative procedures for processing payments for the entire term of the subcontract unless authorized to change the form and administrative payment procedures under Oregon's Prompt Payment statutes.

3. A clause that requires the payment of an interest penalty in the amount of 9% per annum if the subcontractor does not make payment to its subcontractors or material suppliers within 10 days as required by Oregon's Prompt Payment statutes.

M. The Contractor shall include a clause in each of its subcontracts and contracts with material suppliers requiring the first-tier subcontractor to include the payment and interest penalty provisions stated above in Section 6.06(H) in each subcontract and require those subcontractors of any tier to include such clauses in each subcontract of any tier.

Copyright© 2018 National Society of Professional Engineers, American Council of Engineering Companies, and American Society of Civil Engineers. All rights reserved.

7.08 Patent Fees and Royalties

A. Contractor shall pay all license fees and royalties and assume all costs incident to the use in the performance of the Work or the incorporation in the Work of any invention, design, process, product, or device which is the subject of patent rights or copyrights held by others. If an invention, design, process, product, or device is specified in the Contract Documents for use in the performance of the Work and if, to the actual knowledge of Owner or Engineer, its use is subject to patent rights or copyrights calling for the payment of any license fee or royalty to others, the existence of such rights will be disclosed in the Contract Documents.

B. To the fullest extent permitted by Laws and Regulations, Owner shall indemnify and hold harmless Contractor, and its officers, directors, members, partners, employees, agents, consultants, and subcontractors, from and against all claims, costs, losses, and damages (including but not limited to all fees and charges of engineers, architects, attorneys, and other professionals, and all court or arbitration or other dispute resolution costs) arising out of or relating to any infringement of patent rights or copyrights incident to the use in the performance of the Work or resulting from the incorporation in the Work of any invention, design, process, product, or device specified in the Contract Documents, but not identified as being subject to payment of any license fee or royalty to others required by patent rights or copyrights.

C. To the fullest extent permitted by Laws and Regulations, Contractor shall indemnify and hold harmless Owner and Engineer, and the officers, directors, members, partners, employees, agents, consultants and subcontractors of each and any of them, from and against all claims, costs, losses, and damages (including but not limited to all fees and charges of engineers, architects, attorneys, and other professionals and all court or arbitration or other dispute resolution costs) arising out of or relating to any infringement of patent rights or copyrights incident to the use in the performance of the Work or resulting from the incorporation in the Work of any invention, design, process, product, or device not specified in the Contract Documents.

7.09 Permits

A. Unless otherwise provided in the Contract Documents, Contractor shall obtain all construction permits, licenses, and certificates of occupancy. Owner shall assist Contractor, when necessary, in obtaining such permits and licenses. Contractor shall pay all governmental charges and inspection fees necessary for the prosecution of the Work which are applicable at the time of the submission of Contractor's Bid (or when Contractor became bound under a negotiated contract). Owner shall pay all initial permit fees and charges of utility owners for connections for providing permanent service to the Work.

7.10 Taxes

A. Contractor shall pay all sales, consumer, use, and other similar taxes required to be paid by Contractor in accordance with the Laws and Regulations of the place of the Project which are applicable during the performance of the Work.

7.11 Laws and Regulations

A. Contractor shall give all notices required by and shall comply with all Laws and Regulations applicable to the performance of the Work. Neither Owner nor Engineer shall be responsible for monitoring Contractor's compliance with any Laws or Regulations.

Copyright© 2018 National Society of Professional Engineers, American Council of Engineering Companies, and American Society of Civil Engineers. All rights reserved.

B. If Contractor performs any Work or takes any other action knowing or having reason to know that it is contrary to Laws or Regulations, Contractor shall bear all resulting costs and losses, and shall indemnify and hold harmless Owner and Engineer, and the officers, directors, members, partners, employees, agents, consultants, and subcontractors of each and any of them, from and against all claims, costs, losses, and damages (including but not limited to all fees and charges of engineers, architects, attorneys, and other professionals and all court or arbitration or other dispute resolution costs) arising out of or relating to such Work or other action. It is not Contractor's responsibility to make certain that the Work described in the Contract Documents is in accordance with Laws and Regulations, but this does not relieve Contractor of its obligations under Paragraph 3.03.

C. Owner or Contractor may give written notice to the other party of any changes after the submission of Contractor's Bid (or after the date when Contractor became bound under a negotiated contract) in Laws or Regulations having an effect on the cost or time of performance of the Work, including but not limited to changes in Laws or Regulations having an effect on procuring permits and on sales, use, value-added, consumption, and other similar taxes. If Owner and Contractor are unable to agree on entitlement to or on the amount or extent, if any, of any adjustment in Contract Price or Contract Times resulting from such changes, then within 30 days of such written notice Contractor may submit a Change Proposal, or Owner may initiate a Claim.

D. The CONTRACTOR shall pay at least the prevailing wage rates as required by the State of Oregon and shall so certify by submitting in duplicate with the first and last request for payment a completed Public Works Wage Certification Form. The OWNER may withhold or retain 25% of any amount earned if the CONTRACTOR does not file any certified payroll form as required.

E. *Oregon Prevailing Wage Requirements*

1. Minimum wage rates shall be no less than the Oregon State Bureau of Labor and Industries wage rates.

2. Wage rates that apply to this contract will be as published by the Oregon State Bureau of Labor and Industries, effective January 1, 2021, and available from:

   Bureau of Labor and Industries
   Wage and Hour Division
   800 NE Oregon Street, #1045
   Portland, Oregon 97232-2180
   Attention: Prevailing Wage Rate Specialist

   (971) 673-0761

   BOLI Website:
   www.Oregon.gov/boli

   BOLI Wage Rates including amendments:
   https://www.oregon.gov/boli/WHD/PWR/Pages/index.aspx

3. Before any payment is made by the Owner of any sums due under this contact, the Owner must receive from the Contractor and any subcontractor a copy of the "Statement of Intent to Pay Prevailing Wages" approved by the Oregon State Bureau of Labor and Industries. Also following the acceptance of the project, the Owner must receive from the

Copyright© 2018 National Society of Professional Engineers, American Council of Engineering Companies, and American Society of Civil Engineers. All rights reserved.

Contractor and each subcontractor a copy of the "Affidavit of Wages Paid" and in addition, from the prime Contractor, a copy of "Release for the Protection of Property Owners and General Contractor," all approved by the State Bureau of Labor and Industries. The Contractor and each subcontractor shall pay all fees associated with and make all applications directly to the Bureau of Labor and Industries. Forms may be obtained from the Bureau of Labor and Industries. These affidavits will be required before any funds retained, according to the provisions of ORS Chapter 279C, are released to the Contractor. Payment by the Contractor or subcontractor of any fees shall be considered incidental to the construction and all costs shall be included in other pay items of the project.

4. In accordance with the Oregon BOLI Prevailing Wage Rate Laws, the following conditions apply to and are hereby incorporated into this contract. However, this is not an exclusive listing of requirements and the Contractor is referred to BOLI for complete requirements.

   a. If the contractor fails to pay for labor and services, the agency can pay for them and withhold these amounts from payments to the contractor. (ORS 279C.515; OAR 839-025-0020(2)(a));

   b. The contractor must pay daily, weekly, weekend and holiday overtime as required. (ORS 279C.540; OAR 839-025-0020(2)(b);

   c. The employer must give written notice to the workers of the number of hours per day and days per week they may be required to work. (OAR 839-025-0020(2)(c));

   d. The contractor must make prompt payment for all medical services for which the contractor has agreed to pay, and for all amounts for which the contractor collects or deducts from the worker's wages. (ORS 279C.530; OAR 839-025-0020(2)(d));

   e. The contractor shall file a public works bond with the Construction Contractors Board before starting work on the project. (ORS 279C.830(3)(a));

   f. The contractor shall include in every subcontract a provision requiring the subcontractor to have a public works bond filed with the Construction Contractors Board before starting work on the project. (ORS 279C.830 (3) (b)).

F. CONTRACTOR shall promptly, as due, make payments to all persons supplying labor or materials for the prosecution of the work provided for herein, and shall also pay all contributions or amounts due the State Industrial Accident Fund on account of the performance of this Contract. The CONTRACTOR shall not permit any lien or claim to be filed or prosecuted against the OWNER on account of any labor or material furnished or contributions due said State Industrial Accident Funds.

   1. In case CONTRACTOR shall fail, neglect, or refuse to make prompt payment of any claim for labor or services (including payments to the State Industrial Accident Fund), furnished by any person in connection with this Contract as said claim becomes due, whether said services and labor be performed for the CONTRACTOR or subcontractor, then the proper officer or officers representing the OWNER may pay such claim(s) and charge the amount thereof against funds which are or will become due to the CONTRACTOR, but the payment of any such claim in the manner herein authorized shall not relieve the CONTRACTOR or his surety from obligations which will result from such claims.

G. CONTRACTOR and all his subcontractors engaged on the project shall have the right to provide Workmen's Compensation coverage by either of the methods permitted under the Oregon

Copyright© 2018 National Society of Professional Engineers, American Council of Engineering Companies, and American Society of Civil Engineers. All rights reserved.

Workers' Compensation Law. The CONTRACTOR shall pay all contributions or amounts due to the Industrial Accident Fund from CONTRACTOR or a subcontractor that are incurred in performance of the contract.

H. Any and all other of the Laws of Oregon which are applicable to work of the nature herein contemplated shall be observed in all respects.

I. The CONTRACTOR shall pay to the Department of Revenue all sums withheld from employees under ORS 316.167.

J. The CONTRACTOR shall pay promptly any person furnishing medical, surgical and hospital care services or other needed care and attention, incident to sickness or injury, to the employees of the CONTRACTOR, of all sums that the CONTRACTOR agrees to pay for the services and all money and sums that the CONTRACTOR deducted from wages as required by ORS 279C.530.

K. The CONTRACTOR shall, where allowed by the specifications, use goods produced or manufactured in the state of Oregon if price, fitness, availability and quality are otherwise equal. Notwithstanding this requirement, the CONTRACTOR shall not substitute goods unless the substitution has been approved in writing by the Project Engineer.

L. The CONTRACTOR shall require every subcontractor, unless exempt, to file a public works bond relating to the subcontract work.

M. The CONTRACTOR, where allowed by the specifications, shall use supplies or materials manufactured from recycled materials. Notwithstanding this requirement, the CONTRACTOR shall not substitute goods unless the substitution has been approved in writing by the Project Engineer.

N. The CONTRACTOR shall comply with Section 202, Executive Order 11245 dated September 24, 1965, as it applies to this Contract. He shall not discriminate against any employee or applicant for employment because of race, color, creed or national origin.

7.12 Record Documents

A. Contractor shall maintain in a safe place at the Site one printed record copy of all Drawings, Specifications, Addenda, Change Orders, Work Change Directives, Field Orders, written interpretations and clarifications, and approved Shop Drawings. Contractor shall keep such record documents in good order and annotate them to show changes made during construction. These record documents, together with all approved Samples, will be available to Engineer for reference. Upon completion of the Work, Contractor shall deliver these record documents to Engineer.

7.13 Safety and Protection

A. Contractor shall be solely responsible for initiating, maintaining, and supervising all safety precautions and programs in connection with the Work. Such responsibility does not relieve Subcontractors of their responsibility for the safety of persons or property in the performance of their work, nor for compliance with applicable safety Laws and Regulations.

B. Contractor shall designate a qualified and experienced safety representative whose duties and responsibilities are the prevention of Work-related accidents and the maintenance and supervision of safety precautions and programs.

Copyright© 2018 National Society of Professional Engineers, American Council of Engineering Companies, and American Society of Civil Engineers. All rights reserved.

C. Contractor shall take all necessary precautions for the safety of, and shall provide the necessary protection to prevent damage, injury, or loss to:

1. all persons on the Site or who may be affected by the Work;
2. all the Work and materials and equipment to be incorporated therein, whether in storage on or off the Site; and
3. other property at the Site or adjacent thereto, including trees, shrubs, lawns, walks, pavements, roadways, structures, other work in progress, utilities, and Underground Facilities not designated for removal, relocation, or replacement in the course of construction.

D. All damage, injury, or loss to any property referred to in Paragraph 7.13.C.2 or 7.13.C.3 caused, directly or indirectly, in whole or in part, by Contractor, any Subcontractor, Supplier, or any other individual or entity directly or indirectly employed by any of them to perform any of the Work, or anyone for whose acts any of them may be liable, shall be remedied by Contractor at its expense (except damage or loss attributable to the fault of Drawings or Specifications or to the acts or omissions of Owner or Engineer or anyone employed by any of them, or anyone for whose acts any of them may be liable, and not attributable, directly or indirectly, in whole or in part, to the fault or negligence of Contractor or any Subcontractor, Supplier, or other individual or entity directly or indirectly employed by any of them).

E. Contractor shall comply with all applicable U.S. Department of Labor Occupational Safety and Health Act (OSHA) and requirements and all other applicable Laws and Regulations relating to the safety of persons or property, or to the protection of persons or property from damage, injury, or loss; and shall erect and maintain all necessary safeguards for such safety and protection.

F. Contractor shall notify Owner; the owners of adjacent property; the owners of Underground Facilities and other utilities (if the identity of such owners is known to Contractor); and other contractors and utility owners performing work at or adjacent to the Site, in writing, when Contractor knows that prosecution of the Work may affect them, and shall cooperate with them in the protection, removal, relocation, and replacement of their property or work in progress.

G. Contractor shall comply with the applicable requirements of Owner's safety programs, if any. Any Owner's safety programs that are applicable to the Work are identified or included in the General Conditions or Specifications.

H. Contractor shall inform Owner and Engineer of the specific requirements of Contractor's safety program with which Owner's and Engineer's employees and representatives must comply while at the Site.

I. Contractor's duties and responsibilities for safety and protection will continue until all the Work is completed, Engineer has issued a written notice to Owner and Contractor in accordance with Paragraph 15.06.C that the Work is acceptable, and Contractor has left the Site (except as otherwise expressly provided in connection with Substantial Completion).

J. Contractor's duties and responsibilities for safety and protection will resume whenever Contractor or any Subcontractor or Supplier returns to the Site to fulfill warranty or correction obligations, or to conduct other tasks arising from the Contract Documents.

Copyright© 2018 National Society of Professional Engineers, American Council of Engineering Companies, and American Society of Civil Engineers. All rights reserved.

K. Safety and accident reports shall be submitted in accordance with the Contractors reporting procedure or by the OR-OSHA reporting form. Unless otherwise provided herein, Contractor shall inform Owner of any accidents and OR-OSHA reportable accidents on the same day or as soon as reasonably possible. Other incidents or accidents will be reported in writing within three (3) calendar days of occurrence.

7.14 Hazard Communication Programs

A. Contractor shall be responsible for coordinating any exchange of safety data sheets (formerly known as material safety data sheets) or other hazard communication information required to be made available to or exchanged between or among employers at the Site in accordance with Laws or Regulations.

7.15 Emergencies

A. In emergencies affecting the safety or protection of persons or the Work or property at the Site or adjacent thereto, Contractor is obligated to act to prevent damage, injury, or loss. Contractor shall give Engineer prompt written notice if Contractor believes that any significant changes in the Work or variations from the Contract Documents have been caused by an emergency, or are required as a result of Contractor's response to an emergency. If Engineer determines that a change in the Contract Documents is required because of an emergency or Contractor's response, a Work Change Directive or Change Order will be issued.

7.16 Submittals

A. *Shop Drawing and Sample Requirements*

1. Before submitting a Shop Drawing or Sample, Contractor shall:

a. review and coordinate the Shop Drawing or Sample with other Shop Drawings and Samples and with the requirements of the Work and the Contract Documents;

b. determine and verify:

1) all field measurements, quantities, dimensions, specified performance and design criteria, installation requirements, materials, catalog numbers, and similar information with respect to the Submittal;

2) the suitability of all materials and equipment offered with respect to the indicated application, fabrication, shipping, handling, storage, assembly, and installation pertaining to the performance of the Work; and

3) all information relative to Contractor's responsibilities for means, methods, techniques, sequences, and procedures of construction, and safety precautions and programs incident thereto;

c. confirm that the Submittal is complete with respect to all related data included in the Submittal.

2. Each Shop Drawing or Sample must bear a stamp or specific written certification that Contractor has satisfied Contractor's obligations under the Contract Documents with respect to Contractor's review of that Submittal, and that Contractor approves the Submittal.

3. With each Shop Drawing or Sample, Contractor shall give Engineer specific written notice of any variations that the Submittal may have from the requirements of the Contract

Copyright© 2018 National Society of Professional Engineers, American Council of Engineering Companies, and American Society of Civil Engineers. All rights reserved.

Documents. This notice must be set forth in a written communication separate from the Submittal; and, in addition, in the case of a Shop Drawing by a specific notation made on the Shop Drawing itself.

B. *Submittal Procedures for Shop Drawings and Samples*: Contractor shall label and submit Shop Drawings and Samples to Engineer for review and approval in accordance with the accepted Schedule of Submittals.

1. *Shop Drawings*

a. Contractor shall submit the number of copies required in the Specifications.

b. Data shown on the Shop Drawings must be complete with respect to quantities, dimensions, specified performance and design criteria, materials, and similar data to show Engineer the services, materials, and equipment Contractor proposes to provide, and to enable Engineer to review the information for the limited purposes required by Paragraph 7.16.C.

2. *Samples*

a. Contractor shall submit the number of Samples required in the Specifications.

b. Contractor shall clearly identify each Sample as to material, Supplier, pertinent data such as catalog numbers, the use for which intended and other data as Engineer may require to enable Engineer to review the Submittal for the limited purposes required by Paragraph 7.16.C.

3. Where a Shop Drawing or Sample is required by the Contract Documents or the Schedule of Submittals, any related Work performed prior to Engineer's review and approval of the pertinent submittal will be at the sole expense and responsibility of Contractor.

C. *Engineer's Review of Shop Drawings and Samples*

1. Engineer will provide timely review of Shop Drawings and Samples in accordance with the accepted Schedule of Submittals. Engineer's review and approval will be only to determine if the items covered by the Submittals will, after installation or incorporation in the Work, comply with the requirements of the Contract Documents, and be compatible with the design concept of the completed Project as a functioning whole as indicated by the Contract Documents.

2. Engineer's review and approval will not extend to means, methods, techniques, sequences, or procedures of construction, or to safety precautions or programs incident thereto.

3. Engineer's review and approval of a separate item as such will not indicate approval of the assembly in which the item functions.

4. Engineer's review and approval of a Shop Drawing or Sample will not relieve Contractor from responsibility for any variation from the requirements of the Contract Documents unless Contractor has complied with the requirements of Paragraph 7.16.A.3 and Engineer has given written approval of each such variation by specific written notation thereof incorporated in or accompanying the Shop Drawing or Sample. Engineer will document any such approved variation from the requirements of the Contract Documents in a Field Order or other appropriate Contract modification.

Copyright© 2018 National Society of Professional Engineers, American Council of Engineering Companies, and American Society of Civil Engineers. All rights reserved.

5. Engineer's review and approval of a Shop Drawing or Sample will not relieve Contractor from responsibility for complying with the requirements of Paragraphs 7.16.A and B.

6. Engineer's review and approval of a Shop Drawing or Sample, or of a variation from the requirements of the Contract Documents, will not, under any circumstances, change the Contract Times or Contract Price, unless such changes are included in a Change Order.

7. Neither Engineer's receipt, review, acceptance, or approval of a Shop Drawing or Sample will result in such item becoming a Contract Document.

8. Contractor shall perform the Work in compliance with the requirements and commitments set forth in approved Shop Drawings and Samples, subject to the provisions of Paragraph 7.16.C.4.

D. *Resubmittal Procedures for Shop Drawings and Samples*

1. Contractor shall make corrections required by Engineer and shall return the required number of corrected copies of Shop Drawings and submit, as required, new Samples for review and approval. Contractor shall direct specific attention in writing to revisions other than the corrections called for by Engineer on previous Submittals.

2. Contractor shall furnish required Shop Drawing and Sample submittals with sufficient information and accuracy to obtain required approval of an item with no more than two resubmittals. Engineer will record Engineer's time for reviewing a third or subsequent resubmittal of a Shop Drawing or Sample, and Contractor shall be responsible for Engineer's charges to Owner for such time. Owner may impose a set-off against payments due Contractor to secure reimbursement for such charges.

3. If Contractor requests a change of a previously approved Shop Drawing or Sample, Contractor shall be responsible for Engineer's charges to Owner for its review time, and Owner may impose a set-off against payments due Contractor to secure reimbursement for such charges, unless the need for such change is beyond the control of Contractor.

E. *Submittals Other than Shop Drawings, Samples, and Owner-Delegated Designs*

1. The following provisions apply to all Submittals other than Shop Drawings, Samples, and Owner-delegated designs:

   a. Contractor shall submit all such Submittals to the Engineer in accordance with the Schedule of Submittals and pursuant to the applicable terms of the Contract Documents.

   b. Engineer will provide timely review of all such Submittals in accordance with the Schedule of Submittals and return such Submittals with a notation of either Accepted or Not Accepted. Any such Submittal that is not returned within the time established in the Schedule of Submittals will be deemed accepted.

   c. Engineer's review will be only to determine if the Submittal is acceptable under the requirements of the Contract Documents as to general form and content of the Submittal.

   d. If any such Submittal is not accepted, Contractor shall confer with Engineer regarding the reason for the non-acceptance, and resubmit an acceptable document.

2. Procedures for the submittal and acceptance of the Progress Schedule, the Schedule of Submittals, and the Schedule of Values are set forth in Paragraphs 2.03. 2.04, and 2.05.

Copyright© 2018 National Society of Professional Engineers, American Council of Engineering Companies, and American Society of Civil Engineers. All rights reserved.

F. Owner-delegated Designs: Submittals pursuant to Owner-delegated designs are governed by the provisions of Paragraph 7.19.

7.17 Contractor's General Warranty and Guarantee

A. Contractor warrants and guarantees to Owner that all Work will be in accordance with the Contract Documents and will not be defective. Engineer is entitled to rely on Contractor's warranty and guarantee.

B. Owner's rights under this warranty and guarantee are in addition to, and are not limited by, Owner's rights under the correction period provisions of Paragraph 15.08. The time in which Owner may enforce its warranty and guarantee rights under this Paragraph 7.17 is limited only by applicable Laws and Regulations restricting actions to enforce such rights; provided, however, that after the end of the correction period under Paragraph 15.08:

1. Owner shall give Contractor written notice of any defective Work within 60 days of the discovery that such Work is defective; and

2. Such notice will be deemed the start of an event giving rise to a Claim under Paragraph 12.01.B, such that any related Claim must be brought within 30 days of the notice.

C. Contractor's warranty and guarantee hereunder excludes defects or damage caused by:

1. abuse, or improper modification, maintenance, or operation, by persons other than Contractor, Subcontractors, Suppliers, or any other individual or entity for whom Contractor is responsible; or

2. normal wear and tear under normal usage.

D. Contractor's obligation to perform and complete the Work in accordance with the Contract Documents is absolute. None of the following will constitute an acceptance of Work that is not in accordance with the Contract Documents, a release of Contractor's obligation to perform the Work in accordance with the Contract Documents, or a release of Owner's warranty and guarantee rights under this Paragraph 7.17:

1. Observations by Engineer;

2. Recommendation by Engineer or payment by Owner of any progress or final payment;

3. The issuance of a certificate of Substantial Completion by Engineer or any payment related thereto by Owner;

4. Use or occupancy of the Work or any part thereof by Owner;

5. Any review and approval of a Shop Drawing or Sample submittal;

6. The issuance of a notice of acceptability by Engineer;

7. The end of the correction period established in Paragraph 15.08;

8. Any inspection, test, or approval by others; or

9. Any correction of defective Work by Owner.

E. If the Contract requires the Contractor to accept the assignment of a contract entered into by Owner, then the specific warranties, guarantees, and correction obligations contained in the

Copyright© 2018 National Society of Professional Engineers, American Council of Engineering Companies, and American Society of Civil Engineers. All rights reserved.

assigned contract will govern with respect to Contractor's performance obligations to Owner for the Work described in the assigned contract.

7.18 Indemnification

A. To the fullest extent permitted by Laws and Regulations, and in addition to any other obligations of Contractor under the Contract or otherwise, Contractor shall indemnify and hold harmless Owner and Engineer, and the officers, directors, members, partners, employees, agents, consultants and subcontractors of each and any of them, from losses, damages, costs, and judgments (including but not limited to all fees and charges of engineers, architects, attorneys, and other professionals, and all court or arbitration or other dispute resolution costs) arising from third-party claims or actions relating to or resulting from the performance or furnishing of the Work, provided that any such claim, action, loss, cost, judgment or damage is attributable to bodily injury, sickness, disease, or death, or to damage to or destruction of tangible property (other than the Work itself), including the loss of use resulting therefrom, but only to the extent caused by any negligent act or omission of Contractor, any Subcontractor, any Supplier, or any individual or entity directly or indirectly employed by any of them to perform any of the Work, or anyone for whose acts any of them may be liable.

B. In any and all claims against Owner or Engineer, or any of their officers, directors, members, partners, employees, agents, consultants, or subcontractors, by any employee (or the survivor or personal representative of such employee) of Contractor, any Subcontractor, any Supplier, or any individual or entity directly or indirectly employed by any of them to perform any of the Work, or anyone for whose acts any of them may be liable, the indemnification obligation under Paragraph 7.18.A will not be limited in any way by any limitation on the amount or type of damages, compensation, or benefits payable by or for Contractor or any such Subcontractor, Supplier, or other individual or entity under workers' compensation acts, disability benefit acts, or other employee benefit acts.

7.19 Delegation of Professional Design Services

A. Owner may require Contractor to provide professional design services for a portion of the Work by express delegation in the Contract Documents. Such delegation will specify the performance and design criteria that such services must satisfy, and the Submittals that Contractor must furnish to Engineer with respect to the Owner-delegated design.

B. Contractor shall cause such Owner-delegated professional design services to be provided pursuant to the professional standard of care by a properly licensed design professional, whose signature and seal must appear on all drawings, calculations, specifications, certifications, and Submittals prepared by such design professional. Such design professional must issue all certifications of design required by Laws and Regulations.

C. If a Shop Drawing or other Submittal related to the Owner-delegated design is prepared by Contractor, a Subcontractor, or others for submittal to Engineer, then such Shop Drawing or other Submittal must bear the written approval of Contractor's design professional when submitted by Contractor to Engineer.

D. Owner and Engineer shall be entitled to rely upon the adequacy, accuracy, and completeness of the services, certifications, and approvals performed or provided by the design professionals retained or employed by Contractor under an Owner-delegated design, subject

Copyright© 2018 National Society of Professional Engineers, American Council of Engineering Companies, and American Society of Civil Engineers. All rights reserved.

to the professional standard of care and the performance and design criteria stated in the Contract Documents.

E. Pursuant to this Paragraph 7.19, Engineer's review, approval, and other determinations regarding design drawings, calculations, specifications, certifications, and other Submittals furnished by Contractor pursuant to an Owner-delegated design will be only for the following limited purposes:

1. Checking for conformance with the requirements of this Paragraph 7.19;
2. Confirming that Contractor (through its design professionals) has used the performance and design criteria specified in the Contract Documents; and
3. Establishing that the design furnished by Contractor is consistent with the design concept expressed in the Contract Documents.

F. Contractor shall not be responsible for the adequacy of performance or design criteria specified by Owner or Engineer.

G. Contractor is not required to provide professional services in violation of applicable Laws and Regulations.

ARTICLE 8—OTHER WORK AT THE SITE

8.01 Other Work

A. In addition to and apart from the Work under the Contract Documents, the Owner may perform other work at or adjacent to the Site. Such other work may be performed by Owner's employees, or through contracts between the Owner and third parties. Owner may also arrange to have third-party utility owners perform work on their utilities and facilities at or adjacent to the Site.

B. If Owner performs other work at or adjacent to the Site with Owner's employees, or through contracts for such other work, then Owner shall give Contractor written notice thereof prior to starting any such other work. If Owner has advance information regarding the start of any third-party utility work that Owner has arranged to take place at or adjacent to the Site, Owner shall provide such information to Contractor.

C. Contractor shall afford proper and safe access to the Site to each contractor that performs such other work, each utility owner performing other work, and Owner, if Owner is performing other work with Owner's employees, and provide a reasonable opportunity for the introduction and storage of materials and equipment and the execution of such other work.

D. Contractor shall do all cutting, fitting, and patching of the Work that may be required to properly connect or otherwise make its several parts come together and properly integrate with such other work. Contractor shall not endanger any work of others by cutting, excavating, or otherwise altering such work; provided, however, that Contractor may cut or alter others' work with the written consent of Engineer and the others whose work will be affected.

E. If the proper execution or results of any part of Contractor's Work depends upon work performed by others, Contractor shall inspect such other work and promptly report to Engineer in writing any delays, defects, or deficiencies in such other work that render it

Copyright© 2018 National Society of Professional Engineers, American Council of Engineering Companies, and American Society of Civil Engineers. All rights reserved.

unavailable or unsuitable for the proper execution and results of Contractor's Work. Contractor's failure to so report will constitute an acceptance of such other work as fit and proper for integration with Contractor's Work except for latent defects and deficiencies in such other work.

F. The provisions of this article are not applicable to work that is performed by third-party utilities or other third-party entities without a contract with Owner, or that is performed without having been arranged by Owner. If such work occurs, then any related delay, disruption, or interference incurred by Contractor is governed by the provisions of Paragraph 4.05.C.3.

8.02 Coordination

A. If Owner intends to contract with others for the performance of other work at or adjacent to the Site, to perform other work at or adjacent to the Site with Owner's employees, or to arrange to have utility owners perform work at or adjacent to the Site, the following will be set forth in the General Conditions or provided to Contractor prior to the start of any such other work:

1. The identity of the individual or entity that will have authority and responsibility for coordination of the activities among the various contractors;

2. An itemization of the specific matters to be covered by such authority and responsibility; and

3. The extent of such authority and responsibilities.

B. Unless otherwise provided herein, Owner shall have sole authority and responsibility for such coordination.

C. Owner intends to contract with others for the performance of other work at or adjacent to the Site.

1. Owner shall have authority and responsibility for coordination of the various contractors and work forces at the Site;

2. The following specific matters are to be covered by such authority and responsibility: Contractor coordination, staging and site access.

3. The extent of such authority and responsibilities is: Construction of the Sweet Home Mahler Water Reclamation Facility Improvements Phase 2, to be completed on the same project site.

8.03 Legal Relationships

A. If, in the course of performing other work for Owner at or adjacent to the Site, the Owner's employees, any other contractor working for Owner, or any utility owner that Owner has arranged to perform work, causes damage to the Work or to the property of Contractor or its Subcontractors, or delays, disrupts, interferes with, or increases the scope or cost of the performance of the Work, through actions or inaction, then Contractor shall be entitled to an equitable adjustment in the Contract Price or the Contract Times. Contractor must submit any Change Proposal seeking an equitable adjustment in the Contract Price or the Contract Times under this paragraph within 30 days of the damaging, delaying, disrupting, or interfering event. The entitlement to, and extent of, any such equitable adjustment will take into account information (if any) regarding such other work that was provided to Contractor in the Contract

Copyright© 2018 National Society of Professional Engineers, American Council of Engineering Companies, and American Society of Civil Engineers. All rights reserved.

Documents prior to the submittal of the Bid or the final negotiation of the terms of the Contract, and any remedies available to Contractor under Laws or Regulations concerning utility action or inaction. When applicable, any such equitable adjustment in Contract Price will be conditioned on Contractor assigning to Owner all Contractor's rights against such other contractor or utility owner with respect to the damage, delay, disruption, or interference that is the subject of the adjustment. Contractor's entitlement to an adjustment of the Contract Times or Contract Price is subject to the provisions of Paragraphs 4.05.D and 4.05.E.

B. Contractor shall take reasonable and customary measures to avoid damaging, delaying, disrupting, or interfering with the work of Owner, any other contractor, or any utility owner performing other work at or adjacent to the Site.

1. If Contractor fails to take such measures and as a result damages, delays, disrupts, or interferes with the work of any such other contractor or utility owner, then Owner may impose a set-off against payments due Contractor, and assign to such other contractor or utility owner the Owner's contractual rights against Contractor with respect to the breach of the obligations set forth in this Paragraph 8.03.B.

2. When Owner is performing other work at or adjacent to the Site with Owner's employees, Contractor shall be liable to Owner for damage to such other work, and for the reasonable direct delay, disruption, and interference costs incurred by Owner as a result of Contractor's failure to take reasonable and customary measures with respect to Owner's other work. In response to such damage, delay, disruption, or interference, Owner may impose a set-off against payments due Contractor.

C. If Contractor damages, delays, disrupts, or interferes with the work of any other contractor, or any utility owner performing other work at or adjacent to the Site, through Contractor's failure to take reasonable and customary measures to avoid such impacts, or if any claim arising out of Contractor's actions, inactions, or negligence in performance of the Work at or adjacent to the Site is made by any such other contractor or utility owner against Contractor, Owner, or Engineer, then Contractor shall (1) promptly attempt to settle the claim as to all parties through negotiations with such other contractor or utility owner, or otherwise resolve the claim by arbitration or other dispute resolution proceeding or at law, and (2) indemnify and hold harmless Owner and Engineer, and the officers, directors, members, partners, employees, agents, consultants and subcontractors of each and any of them from and against any such claims, and against all costs, losses, and damages (including but not limited to all fees and charges of engineers, architects, attorneys, and other professionals and all court or arbitration or other dispute resolution costs) arising out of or relating to such damage, delay, disruption, or interference.

ARTICLE 9—OWNER'S RESPONSIBILITIES

9.01 Communications to Contractor

A. Except as otherwise provided in these General Conditions, Owner shall issue all communications to Contractor through the Engineer or the City's Resident Project Representative.

Copyright© 2018 National Society of Professional Engineers, American Council of Engineering Companies, and American Society of Civil Engineers. All rights reserved.

9.02 Replacement of Engineer

A. Owner may at its discretion appoint an engineer to replace Engineer, provided Contractor makes no reasonable objection to the replacement engineer. The replacement engineer's status under the Contract Documents will be that of the former Engineer.

9.03 Furnish Data

A. Owner shall promptly furnish the data required of Owner under the Contract Documents.

9.04 Pay When Due

A. Owner shall make payments to Contractor when they are due as provided in the Agreement.

9.05 Lands and Easements; Reports, Tests, and Drawings

A. Owner's duties with respect to providing lands and easements are set forth in Paragraph 5.01.

B. Owner's duties with respect to providing engineering surveys to establish reference points are set forth in Paragraph 4.03.

C. Article 5 refers to Owner's identifying and making available to Contractor copies of reports of explorations and tests of conditions at the Site, and drawings of physical conditions relating to existing surface or subsurface structures at the Site.

9.06 Insurance

A. Owner's responsibilities, if any, with respect to purchasing and maintaining liability and property insurance are set forth in Article 6.

9.07 Change Orders

A. Owner's responsibilities with respect to Change Orders are set forth in Article 11.

9.08 Inspections, Tests, and Approvals

A. Owner's responsibility with respect to certain inspections, tests, and approvals is set forth in Paragraph 14.02.B.

9.09 Limitations on Owner's Responsibilities

A. The Owner shall not supervise, direct, or have control or authority over, nor be responsible for, Contractor's means, methods, techniques, sequences, or procedures of construction, or the safety precautions and programs incident thereto, or for any failure of Contractor to comply with Laws and Regulations applicable to the performance of the Work. Owner will not be responsible for Contractor's failure to perform the Work in accordance with the Contract Documents.

9.10 Undisclosed Hazardous Environmental Condition

A. Owner's responsibility in respect to an undisclosed Hazardous Environmental Condition is set forth in Paragraph 5.06.

9.11 Evidence of Financial Arrangements

A. Upon request of Contractor, Owner shall furnish Contractor reasonable evidence that financial arrangements have been made to satisfy Owner's obligations under the Contract (including obligations under proposed changes in the Work).

Copyright© 2018 National Society of Professional Engineers, American Council of Engineering Companies, and American Society of Civil Engineers. All rights reserved.

9.12 Safety Programs

A. While at the Site, Owner's employees and representatives shall comply with the specific applicable requirements of Contractor's safety programs of which Owner has been informed.

B. Owner shall furnish copies of any applicable Owner safety programs to Contractor.

9.13 Owner's Site Representative

A. Owner will furnish an "Owner's Site Representative" who will also serve as the "Resident Project Representative". The Owner's Site Representative and Resident Project Representative will be Patricia Rice.

ARTICLE 10—ENGINEER'S STATUS DURING CONSTRUCTION

10.01 Owner's Representative

A. Engineer will be Owner's representative during the construction period. The duties and responsibilities and the limitations of authority of Engineer as Owner's representative during construction are set forth in the Contract.

10.02 Visits to Site

A. Engineer will make visits to the Site at intervals appropriate to the various stages of construction as Engineer deems necessary in order to observe, as an experienced and qualified design professional, the progress that has been made and the quality of the various aspects of Contractor's executed Work. Based on information obtained during such visits and observations, Engineer, for the benefit of Owner, will determine, in general, if the Work is proceeding in accordance with the Contract Documents. Engineer will not be required to make exhaustive or continuous inspections on the Site to check the quality or quantity of the Work. Engineer's efforts will be directed toward providing for Owner a greater degree of confidence that the completed Work will conform generally to the Contract Documents. On the basis of such visits and observations, Engineer will keep Owner informed of the progress of the Work and will endeavor to guard Owner against defective Work.

B. Engineer's visits and observations are subject to all the limitations on Engineer's authority and responsibility set forth in Paragraph 10.07. Particularly, but without limitation, during or as a result of Engineer's visits or observations of Contractor's Work, Engineer will not supervise, direct, control, or have authority over or be responsible for Contractor's means, methods, techniques, sequences, or procedures of construction, or the safety precautions and programs incident thereto, or for any failure of Contractor to comply with Laws and Regulations applicable to the performance of the Work.

10.03 Resident Project Representative

A. Owner and Engineer have agreed that the Owner will furnish a Resident Project Representative (RPR) to represent Engineer at the Site and assist Engineer in observing the progress and quality of the Work.

B. The Resident Project Representative (RPR) will be Engineer's representative at the Site. RPR's dealings in matters pertaining to the Work in general will be with Engineer and Contractor. RPR's dealings with Subcontractors will only be through or with the full knowledge or approval of Contractor. The RPR will:

Copyright© 2018 National Society of Professional Engineers, American Council of Engineering Companies, and American Society of Civil Engineers. All rights reserved.

1. *Conferences and Meetings:* Attend meetings with Contractor, such as preconstruction conferences, progress meetings, job conferences, and other Project-related meetings (but not including Contractor's safety meetings), and as appropriate prepare and circulate copies of minutes thereof.
2. *Safety Compliance:* Comply with Site safety programs, as they apply to RPR, and if required to do so by such safety programs, receive safety training specifically related to RPR's own personal safety while at the Site.
3. *Liaison*
   a. Serve as Engineer's liaison with Contractor. Working principally through Contractor's authorized representative or designee, assist in providing information regarding the provisions and intent of the Contract Documents.
   b. Assist Engineer in serving as Owner's liaison with Contractor when Contractor's operations affect Owner's on-Site operations.
   c. Assist in obtaining from Owner additional details or information, when required for Contractor's proper execution of the Work.
4. Review of Work; Defective Work
   a. Conduct on-Site observations of the Work to assist Engineer in determining, to the extent set forth in Paragraph 10.02, if the Work is in general proceeding in accordance with the Contract Documents.
   b. Observe whether any Work in place appears to be defective.
   c. Observe whether any Work in place should be uncovered for observation, or requires special testing, inspection or approval.
5. Inspections and Tests
   a. Observe Contractor-arranged inspections required by Laws and Regulations, including but not limited to those performed by public or other agencies having jurisdiction over the Work.
   b. Accompany visiting inspectors representing public or other agencies having jurisdiction over the Work.
6. *Payment Requests:* Review Applications for Payment with Contractor.
7. *Completion*
   a. Participate in Engineer's visits regarding Substantial Completion.
   b. Assist in the preparation of a punch list of items to be completed or corrected.
   c. Participate in Engineer's visit to the Site in the company of Owner and Contractor regarding completion of the Work, and prepare a final punch list of items to be completed or corrected by Contractor.
   d. Observe whether items on the final punch list have been completed or corrected.

D. The RPR will not:

1. Authorize any deviation from the Contract Documents or substitution of materials or equipment (including "or-equal" items).

Copyright© 2018 National Society of Professional Engineers, American Council of Engineering Companies, and American Society of Civil Engineers. All rights reserved.

2. Exceed limitations of Engineer's authority as set forth in the Contract Documents.
3. Undertake any of the responsibilities of Contractor, Subcontractors, or Suppliers.
4. Advise on, issue directions relative to, or assume control over any aspect of the means, methods, techniques, sequences or procedures of construction.
5 Advise on, issue directions regarding, or assume control over security or safety practices, precautions, and programs in connection with the activities or operations of Owner or Contractor.
6. Participate in specialized field or laboratory tests or inspections conducted off-site by others except as specifically authorized by Engineer.
7. Authorize Owner to occupy the Project in whole or in part.

10.04 Engineer's Authority

A. Engineer has the authority to reject Work in accordance with Article 14.

B. Engineer's authority as to Submittals is set forth in Paragraph 7.16.

C. Engineer's authority as to design drawings, calculations, specifications, certifications and other Submittals from Contractor in response to Owner's delegation (if any) to Contractor of professional design services, is set forth in Paragraph 7.19.

D. Engineer's authority as to changes in the Work is set forth in Article 11.

E. Engineer's authority as to Applications for Payment is set forth in Article 15.

10.05 Determinations for Unit Price Work

A. Engineer will determine the actual quantities and classifications of Unit Price Work performed by Contractor as set forth in Paragraph 13.03.

10.06 Decisions on Requirements of Contract Documents and Acceptability of Work

A. Engineer will render decisions regarding the requirements of the Contract Documents, and judge the acceptability of the Work, pursuant to the specific procedures set forth herein for initial interpretations, Change Proposals, and acceptance of the Work. In rendering such decisions and judgments, Engineer will not show partiality to Owner or Contractor, and will not be liable to Owner, Contractor, or others in connection with any proceedings, interpretations, decisions, or judgments conducted or rendered in good faith.

10.07 Limitations on Engineer's Authority and Responsibilities

A. Neither Engineer's authority or responsibility under this Article 10 or under any other provision of the Contract, nor any decision made by Engineer in good faith either to exercise or not exercise such authority or responsibility or the undertaking, exercise, or performance of any authority or responsibility by Engineer, will create, impose, or give rise to any duty in contract, tort, or otherwise owed by Engineer to Contractor, any Subcontractor, any Supplier, any other individual or entity, or to any surety for or employee or agent of any of them.

B. Engineer will not supervise, direct, control, or have authority over or be responsible for Contractor's means, methods, techniques, sequences, or procedures of construction, or the safety precautions and programs incident thereto, or for any failure of Contractor to comply with Laws and Regulations applicable to the performance of the Work. Engineer will not be

Copyright© 2018 National Society of Professional Engineers, American Council of Engineering Companies, and American Society of Civil Engineers. All rights reserved.

responsible for Contractor's failure to perform the Work in accordance with the Contract Documents.

C. Engineer will not be responsible for the acts or omissions of Contractor or of any Subcontractor, any Supplier, or of any other individual or entity performing any of the Work.

D. Engineer's review of the final Application for Payment and accompanying documentation, and all maintenance and operating instructions, schedules, guarantees, bonds, certificates of inspection, tests and approvals, and other documentation required to be delivered by Contractor under Paragraph 15.06.A, will only be to determine generally that their content complies with the requirements of, and in the case of certificates of inspections, tests, and approvals, that the results certified indicate compliance with the Contract Documents.

E. The limitations upon authority and responsibility set forth in this Paragraph 10.07 also apply to the Resident Project Representative, if any.

10.08 Compliance with Safety Program

A. While at the Site, Engineer's employees and representatives will comply with the specific applicable requirements of Owner's and Contractor's safety programs of which Engineer has been informed.

ARTICLE 11—CHANGES TO THE CONTRACT

11.01 Amending and Supplementing the Contract

A. The Contract may be amended or supplemented by a Change Order, a Work Change Directive, or a Field Order.

B. If an amendment or supplement to the Contract includes a change in the Contract Price or the Contract Times, such amendment or supplement must be set forth in writing in a Change Order.

C. All changes to the Contract that involve (1) the performance or acceptability of the Work, (2) the design (as set forth in the Drawings, Specifications, or otherwise), or (3) other engineering or technical matters, must be supported by Engineer's recommendation. Owner and Contractor may amend other terms and conditions of the Contract without the recommendation of the Engineer.

11.02 Change Orders

A. Owner and Contractor shall execute appropriate Change Orders covering:

1. Changes in Contract Price or Contract Times which are agreed to by the parties, including any undisputed sum or amount of time for Work actually performed in accordance with a written Work Change Directive;

2. Changes in Contract Price resulting from an Owner set-off, unless Contractor has duly contested such set-off;

3. Changes in the Work which are: (a) ordered by Owner pursuant to Paragraph 11.05, (b) required because of Owner's acceptance of defective Work under Paragraph 14.04 or Owner's correction of defective Work under Paragraph 14.07, or (c) agreed to by the parties, subject to the need for Engineer's recommendation if the change in the Work

Copyright© 2018 National Society of Professional Engineers, American Council of Engineering Companies, and American Society of Civil Engineers. All rights reserved.

DocuSign Envelope ID: D92FB7CA-DD9A-40FF-B59F-20FB66385E4F

involves the design (as set forth in the Drawings, Specifications, or otherwise) or other engineering or technical matters; and

4. Changes that embody the substance of any final and binding results under: Paragraph 11.03.B, resolving the impact of a Work Change Directive; Paragraph 11.09, concerning Change Proposals; Article 12, Claims; Paragraph 13.02.D, final adjustments resulting from allowances; Paragraph 13.03.D, final adjustments relating to determination of quantities for Unit Price Work; and similar provisions.

B. If Owner or Contractor refuses to execute a Change Order that is required to be executed under the terms of Paragraph 11.02.A, it will be deemed to be of full force and effect, as if fully executed.

11.03 Work Change Directives

A. A Work Change Directive will not change the Contract Price or the Contract Times but is evidence that the parties expect that the modification ordered or documented by a Work Change Directive will be incorporated in a subsequently issued Change Order, following negotiations by the parties as to the Work Change Directive's effect, if any, on the Contract Price and Contract Times; or, if negotiations are unsuccessful, by a determination under the terms of the Contract Documents governing adjustments, expressly including Paragraph 11.07 regarding change of Contract Price.

B. If Owner has issued a Work Change Directive and:

1. Contractor believes that an adjustment in Contract Times or Contract Price is necessary, then Contractor shall submit any Change Proposal seeking such an adjustment no later than 30 days after the completion of the Work set out in the Work Change Directive.

2. Owner believes that an adjustment in Contract Times or Contract Price is necessary, then Owner shall submit any Claim seeking such an adjustment no later than 60 days after issuance of the Work Change Directive.

11.04 Field Orders

A. Engineer may authorize minor changes in the Work if the changes do not involve an adjustment in the Contract Price or the Contract Times and are compatible with the design concept of the completed Project as a functioning whole as indicated by the Contract Documents. Such changes will be accomplished by a Field Order and will be binding on Owner and also on Contractor, which shall perform the Work involved promptly.

B. If Contractor believes that a Field Order justifies an adjustment in the Contract Price or Contract Times, then before proceeding with the Work at issue, Contractor shall submit a Change Proposal as provided herein.

11.05 Owner-Authorized Changes in the Work

A. Without invalidating the Contract and without notice to any surety, Owner may, at any time or from time to time, order additions, deletions, or revisions in the Work. Changes involving the design (as set forth in the Drawings, Specifications, or otherwise) or other engineering or technical matters will be supported by Engineer's recommendation.

B. Such changes in the Work may be accomplished by a Change Order, if Owner and Contractor have agreed as to the effect, if any, of the changes on Contract Times or Contract Price; or by a Work Change Directive. Upon receipt of any such document, Contractor shall promptly

Copyright© 2018 National Society of Professional Engineers, American Council of Engineering Companies, and American Society of Civil Engineers. All rights reserved.

proceed with the Work involved; or, in the case of a deletion in the Work, promptly cease construction activities with respect to such deleted Work. Added or revised Work must be performed under the applicable conditions of the Contract Documents.

C. Nothing in this Paragraph 11.05 obligates Contractor to undertake work that Contractor reasonably concludes cannot be performed in a manner consistent with Contractor's safety obligations under the Contract Documents or Laws and Regulations.

11.06 Unauthorized Changes in the Work

A. Contractor shall not be entitled to an increase in the Contract Price or an extension of the Contract Times with respect to any work performed that is not required by the Contract Documents, as amended, modified, or supplemented, except in the case of an emergency as provided in Paragraph 7.15 or in the case of uncovering Work as provided in Paragraph 14.05.C.2.

11.07 Change of Contract Price

A. The Contract Price may only be changed by a Change Order. Any Change Proposal for an adjustment in the Contract Price must comply with the provisions of Paragraph 11.09. Any Claim for an adjustment of Contract Price must comply with the provisions of Article 12.

B. An adjustment in the Contract Price will be determined as follows:

1. Where the Work involved is covered by unit prices contained in the Contract Documents, then by application of such unit prices to the quantities of the items involved (subject to the provisions of Paragraph 13.03);

2. Where the Work involved is not covered by unit prices contained in the Contract Documents, then by a mutually agreed lump sum (which may include an allowance for overhead and profit not necessarily in accordance with Paragraph 11.07.C.2); or

3. Where the Work involved is not covered by unit prices contained in the Contract Documents and the parties do not reach mutual agreement to a lump sum, then on the basis of the Cost of the Work (determined as provided in Paragraph 13.01) plus a Contractor's fee for overhead and profit (determined as provided in Paragraph 11.07.C).

C. *Contractor's Fee*: When applicable, the Contractor's fee for overhead and profit will be determined as follows:

1. A mutually acceptable fixed fee; or

2. If a fixed fee is not agreed upon, then a fee based on the following percentages of the various portions of the Cost of the Work:

a. For costs incurred under Paragraphs 13.01.B.1 and 13.01.B.2, the Contractor's fee will be 15 percent;

b. For costs incurred under Paragraph 13.01.B.3, the Contractor's fee will be 5 percent;

c. Where one or more tiers of subcontracts are on the basis of Cost of the Work plus a fee and no fixed fee is agreed upon, the intent of Paragraphs 11.07.C.2.a and 11.07.C.2.b is that the Contractor's fee will be based on: (1) a fee of 15 percent of the costs incurred under Paragraphs 13.01.B.1 and 13.01.B.2 by the Subcontractor that actually performs the Work, at whatever tier, and (2) with respect to Contractor itself and to any Subcontractors of a tier higher than that of the Subcontractor that actually

Copyright© 2018 National Society of Professional Engineers, American Council of Engineering Companies, and American Society of Civil Engineers. All rights reserved.

performs the Work, a fee of 5 percent of the amount (fee plus underlying costs incurred) attributable to the next lower tier Subcontractor; provided, however, that for any such subcontracted Work the maximum total fee to be paid by Owner will be no greater than 27 percent of the costs incurred by the Subcontractor that actually performs the Work;

d. No fee will be payable on the basis of costs itemized under Paragraphs 13.01.B.4, 13.01.B.5, and 13.01.C;

e. The amount of credit to be allowed by Contractor to Owner for any change which results in a net decrease in Cost of the Work will be the amount of the actual net decrease in Cost of the Work and a deduction of an additional amount equal to 5 percent of such actual net decrease in Cost of the Work; and

f. When both additions and credits are involved in any one change or Change Proposal, the adjustment in Contractor's fee will be computed by determining the sum of the costs in each of the cost categories in Paragraph 13.01.B (specifically, payroll costs, Paragraph 13.01.B.1; incorporated materials and equipment costs, Paragraph 13.01.B.2; Subcontract costs, Paragraph 13.01.B.3; special consultants costs, Paragraph 13.01.B.4; and other costs, Paragraph 13.01.B.5) and applying to each such cost category sum the appropriate fee from Paragraphs 11.07.C.2.a through 11.07.C.2.e, inclusive.

11.08 Change of Contract Times

A. The Contract Times may only be changed by a Change Order. Any Change Proposal for an adjustment in the Contract Times must comply with the provisions of Paragraph 11.09. Any Claim for an adjustment in the Contract Times must comply with the provisions of Article 12.

B. Delay, disruption, and interference in the Work, and any related changes in Contract Times, are addressed in and governed by Paragraph 4.05.

11.09 Change Proposals

A. *Purpose and Content*: Contractor shall submit a Change Proposal to Engineer to request an adjustment in the Contract Times or Contract Price; contest an initial decision by Engineer concerning the requirements of the Contract Documents or relating to the acceptability of the Work under the Contract Documents; challenge a set-off against payment due; or seek other relief under the Contract. The Change Proposal will specify any proposed change in Contract Times or Contract Price, or other proposed relief, and explain the reason for the proposed change, with citations to any governing or applicable provisions of the Contract Documents. Each Change Proposal will address only one issue, or a set of closely related issues.

B. *Change Proposal Procedures*

1. *Submittal*: Contractor shall submit each Change Proposal to Engineer within 30 days after the start of the event giving rise thereto, or after such initial decision.

2. *Supporting Data*: The Contractor shall submit supporting data, including the proposed change in Contract Price or Contract Time (if any), to the Engineer and Owner within 15 days after the submittal of the Change Proposal.

Copyright© 2018 National Society of Professional Engineers, American Council of Engineering Companies, and American Society of Civil Engineers. All rights reserved.

a. Change Proposals based on or related to delay, interruption, or interference must comply with the provisions of Paragraphs 4.05.D and 4.05.E.

b. Change proposals related to a change of Contract Price must include full and detailed accounts of materials incorporated into the Work and labor and equipment used for the subject Work.

The supporting data must be accompanied by a written statement that the supporting data are accurate and complete, and that any requested time or price adjustment is the entire adjustment to which Contractor believes it is entitled as a result of said event.

3. *Engineer's Initial Review*: Engineer will advise Owner regarding the Change Proposal, and consider any comments or response from Owner regarding the Change Proposal. If in its discretion Engineer concludes that additional supporting data is needed before conducting a full review and making a decision regarding the Change Proposal, then Engineer may request that Contractor submit such additional supporting data by a date specified by Engineer, prior to Engineer beginning its full review of the Change Proposal.

4. *Engineer's Full Review and Action on the Change Proposal*: Upon receipt of Contractor's supporting data (including any additional data requested by Engineer), Engineer will conduct a full review of each Change Proposal and, within 30 days after such receipt of the Contractor's supporting data, either approve the Change Proposal in whole, deny it in whole, or approve it in part and deny it in part. Such actions must be in writing, with a copy provided to Owner and Contractor. If Engineer does not take action on the Change Proposal within 30 days, then either Owner or Contractor may at any time thereafter submit a letter to the other party indicating that as a result of Engineer's inaction the Change Proposal is deemed denied, thereby commencing the time for appeal of the denial under Article 12.

5. *Binding Decision*: Engineer's decision is final and binding upon Owner and Contractor, unless Owner or Contractor appeals the decision by filing a Claim under Article 12.

C. *Resolution of Certain Change Proposals*: If the Change Proposal does not involve the design (as set forth in the Drawings, Specifications, or otherwise), the acceptability of the Work, or other engineering or technical matters, then Engineer will notify the parties in writing that the Engineer is unable to resolve the Change Proposal. For purposes of further resolution of such a Change Proposal, such notice will be deemed a denial, and Contractor may choose to seek resolution under the terms of Article 12.

D. *Post-Completion*: Contractor shall not submit any Change Proposals after Engineer issues a written recommendation of final payment pursuant to Paragraph 15.06.B.

11.10 Notification to Surety

A. If the provisions of any bond require notice to be given to a surety of any change affecting the general scope of the Work or the provisions of the Contract Documents (including, but not limited to, Contract Price or Contract Times), the giving of any such notice will be Contractor's responsibility. The amount of each applicable bond will be adjusted to reflect the effect of any such change.

Copyright© 2018 National Society of Professional Engineers, American Council of Engineering Companies, and American Society of Civil Engineers. All rights reserved.

ARTICLE 12—CLAIMS

12.01 Claims

A. *Claims Process*: The following disputes between Owner and Contractor are subject to the Claims process set forth in this article:

1. Appeals by Owner or Contractor of Engineer's decisions regarding Change Proposals;
2. Owner demands for adjustments in the Contract Price or Contract Times, or other relief under the Contract Documents;
3. Disputes that Engineer has been unable to address because they do not involve the design (as set forth in the Drawings, Specifications, or otherwise), the acceptability of the Work, or other engineering or technical matters; and
4. Subject to the waiver provisions of Paragraph 15.07, any dispute arising after Engineer has issued a written recommendation of final payment pursuant to Paragraph 15.06.B.

B. *Submittal of Claim*: The party submitting a Claim shall deliver it directly to the other party to the Contract promptly (but in no event later than 30 days) after the start of the event giving rise thereto; in the case of appeals regarding Change Proposals within 30 days of the decision under appeal. The party submitting the Claim shall also furnish a copy to the Engineer, for its information only. The responsibility to substantiate a Claim rests with the party making the Claim. In the case of a Claim by Contractor seeking an increase in the Contract Times or Contract Price, Contractor shall certify that the Claim is made in good faith, that the supporting data are accurate and complete, and that to the best of Contractor's knowledge and belief the amount of time or money requested accurately reflects the full amount to which Contractor is entitled.

C. *Review and Resolution*: The party receiving a Claim shall review it thoroughly, giving full consideration to its merits. The two parties shall seek to resolve the Claim through the exchange of information and direct negotiations. The parties may extend the time for resolving the Claim by mutual agreement. All actions taken on a Claim will be stated in writing and submitted to the other party, with a copy to Engineer.

D. *Mediation*

1. At any time after initiation of a Claim, Owner and Contractor may mutually agree to mediation of the underlying dispute. The agreement to mediate will stay the Claim submittal and response process.
2. If Owner and Contractor agree to mediation, then after 60 days from such agreement, either Owner or Contractor may unilaterally terminate the mediation process, and the Claim submittal and decision process will resume as of the date of the termination. If the mediation proceeds but is unsuccessful in resolving the dispute, the Claim submittal and decision process will resume as of the date of the conclusion of the mediation, as determined by the mediator.
3. Owner and Contractor shall each pay one-half of the mediator's fees and costs.

E. *Partial Approval*: If the party receiving a Claim approves the Claim in part and denies it in part, such action will be final and binding unless within 30 days of such action the other party invokes the procedure set forth in Article 17 for final resolution of disputes.

Copyright© 2018 National Society of Professional Engineers, American Council of Engineering Companies, and American Society of Civil Engineers. All rights reserved.

F. *Denial of Claim*: If efforts to resolve a Claim are not successful, the party receiving the Claim may deny it by giving written notice of denial to the other party. If the receiving party does not take action on the Claim within 90 days, then either Owner or Contractor may at any time thereafter submit a letter to the other party indicating that as a result of the inaction, the Claim is deemed denied, thereby commencing the time for appeal of the denial. A denial of the Claim will be final and binding unless within 30 days of the denial the other party invokes the procedure set forth in Article 17 for the final resolution of disputes.

G. *Final and Binding Results*: If the parties reach a mutual agreement regarding a Claim, whether through approval of the Claim, direct negotiations, mediation, or otherwise; or if a Claim is approved in part and denied in part, or denied in full, and such actions become final and binding; then the results of the agreement or action on the Claim will be incorporated in a Change Order or other written document to the extent they affect the Contract, including the Work, the Contract Times, or the Contract Price.

ARTICLE 13—COST OF THE WORK; ALLOWANCES; UNIT PRICE WORK

13.01 Cost of the Work

A. *Purposes for Determination of Cost of the Work*: The term Cost of the Work means the sum of all costs necessary for the proper performance of the Work at issue, as further defined below. The provisions of this Paragraph 13.01 are used for two distinct purposes:

1. To determine Cost of the Work when Cost of the Work is a component of the Contract Price, under cost-plus-fee, time-and-materials, or other cost-based terms; or

2. When needed to determine the value of a Change Order, Change Proposal, Claim, set-off, or other adjustment in Contract Price. When the value of any such adjustment is determined on the basis of Cost of the Work, Contractor is entitled only to those additional or incremental costs required because of the change in the Work or because of the event giving rise to the adjustment.

B. *Costs Included*: Except as otherwise may be agreed to in writing by Owner, costs included in the Cost of the Work will be in amounts no higher than those commonly incurred in the locality of the Project, will not include any of the costs itemized in Paragraph 13.01.C, and will include only the following items:

1. Payroll costs for employees in the direct employ of Contractor in the performance of the Work under schedules of job classifications agreed upon by Owner and Contractor in advance of the subject Work. Such employees include, without limitation, superintendents, foremen, safety managers, safety representatives, and other personnel employed full time on the Work. Payroll costs for employees not employed full time on the Work will be apportioned on the basis of their time spent on the Work. Payroll costs include, but are not limited to, salaries and wages plus the cost of fringe benefits, which include social security contributions, unemployment, excise, and payroll taxes, workers' compensation, health and retirement benefits, sick leave, and vacation and holiday pay applicable thereto. The expenses of performing Work outside of regular working hours, on Saturday, Sunday, or legal holidays, will be included in the above to the extent authorized by Owner.

2. Cost of all materials and equipment furnished and incorporated in the Work, including costs of transportation and storage thereof, and Suppliers' field services required in

Copyright© 2018 National Society of Professional Engineers, American Council of Engineering Companies, and American Society of Civil Engineers. All rights reserved.

connection therewith. All cash discounts accrue to Contractor unless Owner deposits funds with Contractor with which to make payments, in which case the cash discounts will accrue to Owner. All trade discounts, rebates, and refunds and returns from sale of surplus materials and equipment will accrue to Owner, and Contractor shall make provisions so that they may be obtained.

3. Payments made by Contractor to Subcontractors for Work performed by Subcontractors. If required by Owner, Contractor shall obtain competitive bids from subcontractors acceptable to Owner and Contractor and shall deliver such bids to Owner, which will then determine, with the advice of Engineer, which bids, if any, will be acceptable. If any subcontract provides that the Subcontractor is to be paid on the basis of Cost of the Work plus a fee, the Subcontractor's Cost of the Work and fee will be determined in the same manner as Contractor's Cost of the Work and fee as provided in this Paragraph 13.01.

4. Costs of special consultants (including but not limited to engineers, architects, testing laboratories, surveyors, attorneys, and accountants) employed or retained for services specifically related to the Work.

5. Other costs consisting of the following:

   a. The proportion of necessary transportation, travel, and subsistence expenses of Contractor's employees incurred in discharge of duties connected with the Work.

   b. Cost, including transportation and maintenance, of all materials, supplies, equipment, machinery, appliances, office, and temporary facilities at the Site, which are consumed in the performance of the Work, and cost, less market value, of such items used but not consumed which remain the property of Contractor.

      1) In establishing included costs for materials such as scaffolding, plating, or sheeting, consideration will be given to the actual or the estimated life of the material for use on other projects; or rental rates may be established on the basis of purchase or salvage value of such items, whichever is less. Contractor will not be eligible for compensation for such items in an amount that exceeds the purchase cost of such item.

   c. *Construction Equipment Rental*

      1) Rentals of all construction equipment and machinery, and the parts thereof, in accordance with rental agreements approved by Owner as to price (including any surcharge or special rates applicable to overtime use of the construction equipment or machinery), and the costs of transportation, loading, unloading, assembly, dismantling, and removal thereof. All such costs will be in accordance with the terms of said rental agreements. The rental of any such equipment, machinery, or parts must cease when the use thereof is no longer necessary for the Work.

      2) Costs for equipment and machinery owned by Contractor or a Contractor-related entity will be paid at a rate shown for such equipment as published by Equipment Watch Cost Recovery (Blue Book) for Oregon. Follow procedures as specified in Section 00197.20 of the Oregon Standard Construction Specifications (current version).

Copyright© 2018 National Society of Professional Engineers, American Council of Engineering Companies, and American Society of Civil Engineers. All rights reserved.

3) With respect to Work that is the result of a Change Order, Change Proposal, Claim, set-off, or other adjustment in Contract Price ("changed Work"), included costs will be based on the time the equipment or machinery is in use on the changed Work and the costs of transportation, loading, unloading, assembly, dismantling, and removal when directly attributable to the changed Work. The cost of any such equipment or machinery, or parts thereof, must cease to accrue when the use thereof is no longer necessary for the changed Work.

d. Sales, consumer, use, and other similar taxes related to the Work, and for which Contractor is liable, as imposed by Laws and Regulations.

e. Deposits lost for causes other than negligence of Contractor, any Subcontractor, or anyone directly or indirectly employed by any of them or for whose acts any of them may be liable, and royalty payments and fees for permits and licenses.

f. Losses and damages (and related expenses) caused by damage to the Work, not compensated by insurance or otherwise, sustained by Contractor in connection with the performance of the Work (except losses and damages within the deductible amounts of builder's risk or other property insurance established in accordance with Paragraph 6.04), provided such losses and damages have resulted from causes other than the negligence of Contractor, any Subcontractor, or anyone directly or indirectly employed by any of them or for whose acts any of them may be liable. Such losses include settlements made with the written consent and approval of Owner. No such losses, damages, and expenses will be included in the Cost of the Work for the purpose of determining Contractor's fee.

g. The cost of utilities, fuel, and sanitary facilities at the Site.

h. Minor expenses such as communication service at the Site, express and courier services, and similar petty cash items in connection with the Work.

i. The costs of premiums for all bonds and insurance that Contractor is required by the Contract Documents to purchase and maintain.

C. *Costs Excluded*: The term Cost of the Work does not include any of the following items:

1. Payroll costs and other compensation of Contractor's officers, executives, principals, general managers, engineers, architects, estimators, attorneys, auditors, accountants, purchasing and contracting agents, expediters, timekeepers, clerks, and other personnel employed by Contractor, whether at the Site or in Contractor's principal or branch office for general administration of the Work and not specifically included in the agreed upon schedule of job classifications referred to in Paragraph 13.01.B.1 or specifically covered by Paragraph 13.01.B.4. The payroll costs and other compensation excluded here are to be considered administrative costs covered by the Contractor's fee.

2. The cost of purchasing, renting, or furnishing small tools and hand tools. For purposes of this paragraph, "small tools and hand tools" means any tool or equipment whose current price if it were purchased new at retail would be less than $500.

3. Expenses of Contractor's principal and branch offices other than Contractor's office at the Site.

4. Any part of Contractor's capital expenses, including interest on Contractor's capital employed for the Work and charges against Contractor for delinquent payments.

Copyright© 2018 National Society of Professional Engineers, American Council of Engineering Companies, and American Society of Civil Engineers. All rights reserved.

5. Costs due to the negligence of Contractor, any Subcontractor, or anyone directly or indirectly employed by any of them or for whose acts any of them may be liable, including but not limited to, the correction of defective Work, disposal of materials or equipment wrongly supplied, and making good any damage to property.

6. Expenses incurred in preparing and advancing Claims.

7. Other overhead or general expense costs of any kind and the costs of any item not specifically and expressly included in Paragraph 13.01.B.

D. *Contractor's Fee*

1. When the Work as a whole is performed on the basis of cost-plus-a-fee, then:

a. Contractor's fee for the Work set forth in the Contract Documents as of the Effective Date of the Contract will be determined as set forth in the Agreement.

b. for any Work covered by a Change Order, Change Proposal, Claim, set-off, or other adjustment in Contract Price on the basis of Cost of the Work, Contractor's fee will be determined as follows:

1) When the fee for the Work as a whole is a percentage of the Cost of the Work, the fee will automatically adjust as the Cost of the Work changes.

2) When the fee for the Work as a whole is a fixed fee, the fee for any additions or deletions will be determined in accordance with Paragraph 11.07.C.2.

2. When the Work as a whole is performed on the basis of a stipulated sum, or any other basis other than cost-plus-a-fee, then Contractor's fee for any Work covered by a Change Order, Change Proposal, Claim, set-off, or other adjustment in Contract Price on the basis of Cost of the Work will be determined in accordance with Paragraph 11.07.C.2.

E. *Documentation and Audit*: Whenever the Cost of the Work for any purpose is to be determined pursuant to this Article 13, Contractor and pertinent Subcontractors will establish and maintain records of the costs in accordance with generally accepted accounting practices. Subject to prior written notice, Owner will be afforded reasonable access, during normal business hours, to all Contractor's accounts, records, books, correspondence, instructions, drawings, receipts, vouchers, memoranda, and similar data relating to the Cost of the Work and Contractor's fee. Contractor shall preserve all such documents for a period of three years after the final payment by Owner. Pertinent Subcontractors will afford such access to Owner, and preserve such documents, to the same extent required of Contractor.

13.02 Allowances

A. It is understood that Contractor has included in the Contract Price all allowances so named in the Contract Documents and shall cause the Work so covered to be performed for such sums and by such persons or entities as may be acceptable to Owner and Engineer.

B. *Cash Allowances*: Contractor agrees that:

1. the cash allowances include the cost to Contractor (less any applicable trade discounts) of materials and equipment required by the allowances to be delivered at the Site, and all applicable taxes; and

2. Contractor's costs for unloading and handling on the Site, labor, installation, overhead, profit, and other expenses contemplated for the cash allowances have been included in

Copyright© 2018 National Society of Professional Engineers, American Council of Engineering Companies, and American Society of Civil Engineers. All rights reserved.

the Contract Price and not in the allowances, and no demand for additional payment for any of the foregoing will be valid.

C. *Owner's Contingency Allowance*: Contractor agrees that an Owner's contingency allowance, if any, is for the sole use of Owner to cover unanticipated costs.

D. Prior to final payment, an appropriate Change Order will be issued as recommended by Engineer to reflect actual amounts due Contractor for Work covered by allowances, and the Contract Price will be correspondingly adjusted.

13.03 Unit Price Work

A. Where the Contract Documents provide that all or part of the Work is to be Unit Price Work, initially the Contract Price will be deemed to include for all Unit Price Work an amount equal to the sum of the unit price for each separately identified item of Unit Price Work times the estimated quantity of each item as indicated in the Agreement.

B. The estimated quantities of items of Unit Price Work are not guaranteed and are solely for the purpose of comparison of Bids and determining an initial Contract Price. Payments to Contractor for Unit Price Work will be based on actual quantities.

C. Each unit price will be deemed to include an amount considered by Contractor to be adequate to cover Contractor's overhead and profit for each separately identified item.

D. Engineer will determine the actual quantities and classifications of Unit Price Work performed by Contractor. Engineer will review with Contractor the Engineer's preliminary determinations on such matters before rendering a written decision thereon (by recommendation of an Application for Payment or otherwise). Engineer's written decision thereon will be final and binding (except as modified by Engineer to reflect changed factual conditions or more accurate data) upon Owner and Contractor, and the final adjustment of Contract Price will be set forth in a Change Order, subject to the provisions of the following paragraph.

E. *Adjustments in Unit Price*

1. Contractor or Owner shall be entitled to an adjustment in the unit price with respect to an item of Unit Price Work if:

   a. the quantity of the item of Unit Price Work performed by Contractor differs materially and significantly from the estimated quantity of such item indicated in the Agreement; and

   b. Contractor's unit costs to perform the item of Unit Price Work have changed materially and significantly as a result of the quantity change.

2. The adjustment in unit price will account for and be coordinated with any related changes in quantities of other items of Work, and in Contractor's costs to perform such other Work, such that the resulting overall change in Contract Price is equitable to Owner and Contractor.

3. Adjusted unit prices will apply to all units of that item.

Copyright© 2018 National Society of Professional Engineers, American Council of Engineering Companies, and American Society of Civil Engineers. All rights reserved.

ARTICLE 14—TESTS AND INSPECTIONS; CORRECTION, REMOVAL, OR ACCEPTANCE OF DEFECTIVE WORK

14.01 Access to Work

A. Owner, Engineer, their consultants and other representatives and personnel of Owner, independent testing laboratories, and authorities having jurisdiction have access to the Site and the Work at reasonable times for their observation, inspection, and testing. Contractor shall provide them proper and safe conditions for such access and advise them of Contractor's safety procedures and programs so that they may comply with such procedures and programs as applicable.

14.02 Tests, Inspections, and Approvals

A. Contractor shall give Engineer timely notice of readiness of the Work (or specific parts thereof) for all required inspections and tests, and shall cooperate with inspection and testing personnel to facilitate required inspections and tests.

B. Owner shall retain and pay for the services of an independent inspector, testing laboratory, or other qualified individual or entity to perform all inspections and tests expressly required by the Contract Documents to be furnished and paid for by Owner, except that costs incurred in connection with tests or inspections of covered Work will be governed by the provisions of Paragraph 14.05.

C. If Laws or Regulations of any public body having jurisdiction require any Work (or part thereof) specifically to be inspected, tested, or approved by an employee or other representative of such public body, Contractor shall assume full responsibility for arranging and obtaining such inspections, tests, or approvals, pay all costs in connection therewith, and furnish Engineer the required certificates of inspection or approval.

D. Contractor shall be responsible for arranging, obtaining, and paying for all inspections and tests required:

1. by the Contract Documents, unless the Contract Documents expressly allocate responsibility for a specific inspection or test to Owner;

2. to attain Owner's and Engineer's acceptance of materials or equipment to be incorporated in the Work;

3. by manufacturers of equipment furnished under the Contract Documents;

4. for testing, adjusting, and balancing of mechanical, electrical, and other equipment to be incorporated into the Work; and

5. for acceptance of materials, mix designs, or equipment submitted for approval prior to Contractor's purchase thereof for incorporation in the Work.

Such inspections and tests will be performed by independent inspectors, testing laboratories, or other qualified individuals or entities acceptable to Owner and Engineer.

E. If the Contract Documents require the Work (or part thereof) to be approved by Owner, Engineer, or another designated individual or entity, then Contractor shall assume full responsibility for arranging and obtaining such approvals.

F. If any Work (or the work of others) that is to be inspected, tested, or approved is covered by Contractor without written concurrence of Engineer, Contractor shall, if requested by Engineer, uncover such Work for observation. Such uncovering will be at Contractor's expense

Copyright© 2018 National Society of Professional Engineers, American Council of Engineering Companies, and American Society of Civil Engineers. All rights reserved.

DocuSign Envelope ID: D92FB7CA-DD9A-40FF-B59F-20FB66385E4F

unless Contractor had given Engineer timely notice of Contractor's intention to cover the same and Engineer had not acted with reasonable promptness in response to such notice.

14.03 Defective Work

A. *Contractor's Obligation*: It is Contractor's obligation to assure that the Work is not defective.

B. *Engineer's Authority*: Engineer has the authority to determine whether Work is defective, and to reject defective Work.

C. *Notice of Defects*: Prompt written notice of all defective Work of which Owner or Engineer has actual knowledge will be given to Contractor.

D. *Correction, or Removal and Replacement*: Promptly after receipt of written notice of defective Work, Contractor shall correct all such defective Work, whether or not fabricated, installed, or completed, or, if Engineer has rejected the defective Work, remove it from the Project and replace it with Work that is not defective.

E. *Preservation of Warranties*: When correcting defective Work, Contractor shall take no action that would void or otherwise impair Owner's special warranty and guarantee, if any, on said Work.

F. *Costs and Damages*: In addition to its correction, removal, and replacement obligations with respect to defective Work, Contractor shall pay all claims, costs, losses, and damages arising out of or relating to defective Work, including but not limited to the cost of the inspection, testing, correction, removal, replacement, or reconstruction of such defective Work, fines levied against Owner by governmental authorities because the Work is defective, and the costs of repair or replacement of work of others resulting from defective Work. Prior to final payment, if Owner and Contractor are unable to agree as to the measure of such claims, costs, losses, and damages resulting from defective Work, then Owner may impose a reasonable set-off against payments due under Article 15.

14.04 Acceptance of Defective Work

A. If, instead of requiring correction or removal and replacement of defective Work, Owner prefers to accept it, Owner may do so (subject, if such acceptance occurs prior to final payment, to Engineer's confirmation that such acceptance is in general accord with the design intent and applicable engineering principles, and will not endanger public safety). Contractor shall pay all claims, costs, losses, and damages attributable to Owner's evaluation of and determination to accept such defective Work (such costs to be approved by Engineer as to reasonableness), and for the diminished value of the Work to the extent not otherwise paid by Contractor. If any such acceptance occurs prior to final payment, the necessary revisions in the Contract Documents with respect to the Work will be incorporated in a Change Order. If the parties are unable to agree as to the decrease in the Contract Price, reflecting the diminished value of Work so accepted, then Owner may impose a reasonable set-off against payments due under Article 15. If the acceptance of defective Work occurs after final payment, Contractor shall pay an appropriate amount to Owner.

14.05 Uncovering Work

A. Engineer has the authority to require additional inspection or testing of the Work, whether or not the Work is fabricated, installed, or completed.

Copyright© 2018 National Society of Professional Engineers, American Council of Engineering Companies, and American Society of Civil Engineers. All rights reserved.

B. If any Work is covered contrary to the written request of Engineer, then Contractor shall, if requested by Engineer, uncover such Work for Engineer's observation, and then replace the covering, all at Contractor's expense.

C. If Engineer considers it necessary or advisable that covered Work be observed by Engineer or inspected or tested by others, then Contractor, at Engineer's request, shall uncover, expose, or otherwise make available for observation, inspection, or testing as Engineer may require, that portion of the Work in question, and provide all necessary labor, material, and equipment.

1. If it is found that the uncovered Work is defective, Contractor shall be responsible for all claims, costs, losses, and damages arising out of or relating to such uncovering, exposure, observation, inspection, and testing, and of satisfactory replacement or reconstruction (including but not limited to all costs of repair or replacement of work of others); and pending Contractor's full discharge of this responsibility the Owner shall be entitled to impose a reasonable set-off against payments due under Article 15.

2. If the uncovered Work is not found to be defective, Contractor shall be allowed an increase in the Contract Price or an extension of the Contract Times, directly attributable to such uncovering, exposure, observation, inspection, testing, replacement, and reconstruction. If the parties are unable to agree as to the amount or extent thereof, then Contractor may submit a Change Proposal within 30 days of the determination that the Work is not defective.

14.06 Owner May Stop the Work

A. If the Work is defective, or Contractor fails to supply sufficient skilled workers or suitable materials or equipment, or fails to perform the Work in such a way that the completed Work will conform to the Contract Documents, then Owner may order Contractor to stop the Work, or any portion thereof, until the cause for such order has been eliminated; however, this right of Owner to stop the Work will not give rise to any duty on the part of Owner to exercise this right for the benefit of Contractor, any Subcontractor, any Supplier, any other individual or entity, or any surety for, or employee or agent of any of them.

14.07 Owner May Correct Defective Work

A. If Contractor fails within a reasonable time after written notice from Engineer to correct defective Work, or to remove and replace defective Work as required by Engineer, then Owner may, after 7 days' written notice to Contractor, correct or remedy any such deficiency.

B. In exercising the rights and remedies under this Paragraph 14.07, Owner shall proceed expeditiously. In connection with such corrective or remedial action, Owner may exclude Contractor from all or part of the Site, take possession of all or part of the Work and suspend Contractor's services related thereto, and incorporate in the Work all materials and equipment stored at the Site or for which Owner has paid Contractor but which are stored elsewhere. Contractor shall allow Owner, Owner's representatives, agents and employees, Owner's other contractors, and Engineer and Engineer's consultants access to the Site to enable Owner to exercise the rights and remedies under this paragraph.

C. All claims, costs, losses, and damages incurred or sustained by Owner in exercising the rights and remedies under this Paragraph 14.07 will be charged against Contractor as set-offs against payments due under Article 15. Such claims, costs, losses and damages will include

Copyright© 2018 National Society of Professional Engineers, American Council of Engineering Companies, and American Society of Civil Engineers. All rights reserved.

but not be limited to all costs of repair, or replacement of work of others destroyed or damaged by correction, removal, or replacement of Contractor's defective Work.

D. Contractor shall not be allowed an extension of the Contract Times because of any delay in the performance of the Work attributable to the exercise by Owner of Owner's rights and remedies under this Paragraph 14.07.

ARTICLE 15—PAYMENTS TO CONTRACTOR; SET-OFFS; COMPLETION; CORRECTION PERIOD

15.01 Progress Payments

A. *Basis for Progress Payments*: The Schedule of Values established as provided in Article 2 will serve as the basis for progress payments and will be incorporated into a form of Application for Payment acceptable to Engineer. Progress payments for Unit Price Work will be based on the number of units completed during the pay period, as determined under the provisions of Paragraph 13.03. Progress payments for cost-based Work will be based on Cost of the Work completed by Contractor during the pay period.

B. *Applications for Payments*

1. At least 20 days before the date established in the Agreement for each progress payment (but not more often than once a month), Contractor shall submit to Engineer for review an Application for Payment filled out and signed by Contractor covering the Work completed as of the date of the Application and accompanied by such supporting documentation as is required by the Contract Documents.

   a. Owner anticipates the date of progress payments will be the 10th day of each calendar month.

2. If payment is requested on the basis of materials and equipment not incorporated in the Work but delivered and suitably stored at the Site or at another location agreed to in writing, the Application for Payment must also be accompanied by: (a) a bill of sale, invoice, copies of subcontract or purchase order payments, or other documentation establishing full payment by Contractor for the materials and equipment; (b) at Owner's request, documentation warranting that Owner has received the materials and equipment free and clear of all Liens; and (c) evidence that the materials and equipment are covered by appropriate property insurance, a warehouse bond, or other arrangements to protect Owner's interest therein, all of which must be satisfactory to Owner.

3. Beginning with the second Application for Payment, each Application must include an affidavit of Contractor stating that all previous progress payments received by Contractor have been applied to discharge Contractor's legitimate obligations associated with prior Applications for Payment.

4. The amount of retainage with respect to progress payments will be as stipulated in the Agreement.

C. *Review of Applications*

1. Engineer will, within 10 days after receipt of each Application for Payment, including each resubmittal, either indicate in writing a recommendation of payment and present the Application to Owner, or return the Application to Contractor indicating in writing

Copyright© 2018 National Society of Professional Engineers, American Council of Engineering Companies, and American Society of Civil Engineers. All rights reserved.

DocuSign Envelope ID: D92FB7CA-DD9A-40FF-B59F-20FB66385E4F

Engineer's reasons for refusing to recommend payment. In the latter case, Contractor may make the necessary corrections and resubmit the Application.

2. Engineer's recommendation of any payment requested in an Application for Payment will constitute a representation by Engineer to Owner, based on Engineer's observations of the executed Work as an experienced and qualified design professional, and on Engineer's review of the Application for Payment and the accompanying data and schedules, that to the best of Engineer's knowledge, information and belief:

   a. the Work has progressed to the point indicated;

   b. the quality of the Work is generally in accordance with the Contract Documents (subject to an evaluation of the Work as a functioning whole prior to or upon Substantial Completion, the results of any subsequent tests called for in the Contract Documents, a final determination of quantities and classifications for Unit Price Work under Paragraph 13.03, and any other qualifications stated in the recommendation); and

   c. the conditions precedent to Contractor's being entitled to such payment appear to have been fulfilled in so far as it is Engineer's responsibility to observe the Work.

3. By recommending any such payment Engineer will not thereby be deemed to have represented that:

   a. inspections made to check the quality or the quantity of the Work as it has been performed have been exhaustive, extended to every aspect of the Work in progress, or involved detailed inspections of the Work beyond the responsibilities specifically assigned to Engineer in the Contract; or

   b. there may not be other matters or issues between the parties that might entitle Contractor to be paid additionally by Owner or entitle Owner to withhold payment to Contractor.

4. Neither Engineer's review of Contractor's Work for the purposes of recommending payments nor Engineer's recommendation of any payment, including final payment, will impose responsibility on Engineer:

   a. to supervise, direct, or control the Work;

   b. for the means, methods, techniques, sequences, or procedures of construction, or the safety precautions and programs incident thereto;

   c. for Contractor's failure to comply with Laws and Regulations applicable to Contractor's performance of the Work;

   d. to make any examination to ascertain how or for what purposes Contractor has used the money paid by Owner; or

   e. to determine that title to any of the Work, materials, or equipment has passed to Owner free and clear of any Liens.

5. Engineer may refuse to recommend the whole or any part of any payment if, in Engineer's opinion, it would be incorrect to make the representations to Owner stated in Paragraph 15.01.C.2.

Copyright© 2018 National Society of Professional Engineers, American Council of Engineering Companies, and American Society of Civil Engineers. All rights reserved.

6. Engineer will recommend reductions in payment (set-offs) necessary in Engineer's opinion to protect Owner from loss because:
    a. the Work is defective, requiring correction or replacement;
    b. the Contract Price has been reduced by Change Orders;
    c. Owner has been required to correct defective Work in accordance with Paragraph 14.07, or has accepted defective Work pursuant to Paragraph 14.04;
    d. Owner has been required to remove or remediate a Hazardous Environmental Condition for which Contractor is responsible; or
    e. Engineer has actual knowledge of the occurrence of any of the events that would constitute a default by Contractor and therefore justify termination for cause under the Contract Documents.

D. *Payment Becomes Due*

1. Ten days after presentation of the Application for Payment to Owner with Engineer's recommendation, the amount recommended (subject to any Owner set-offs) will become due, and when due will be paid by Owner to Contractor.

E. *Reductions in Payment by Owner*

1. In addition to any reductions in payment (set-offs) recommended by Engineer, Owner is entitled to impose a set-off against payment based on any of the following:
    a. Claims have been made against Owner based on Contractor's conduct in the performance or furnishing of the Work, or Owner has incurred costs, losses, or damages resulting from Contractor's conduct in the performance or furnishing of the Work, including but not limited to claims, costs, losses, or damages from workplace injuries, adjacent property damage, non-compliance with Laws and Regulations, and patent infringement;
    b. Contractor has failed to take reasonable and customary measures to avoid damage, delay, disruption, and interference with other work at or adjacent to the Site;
    c. Contractor has failed to provide and maintain required bonds or insurance;
    d. Owner has been required to remove or remediate a Hazardous Environmental Condition for which Contractor is responsible;
    e. Owner has incurred extra charges or engineering costs related to submittal reviews, evaluations of proposed substitutes, tests and inspections, or return visits to manufacturing or assembly facilities;
    f. The Work is defective, requiring correction or replacement;
    g. Owner has been required to correct defective Work in accordance with Paragraph 14.07, or has accepted defective Work pursuant to Paragraph 14.04;
    h. The Contract Price has been reduced by Change Orders;
    i. An event has occurred that would constitute a default by Contractor and therefore justify a termination for cause;

Copyright© 2018 National Society of Professional Engineers, American Council of Engineering Companies, and American Society of Civil Engineers. All rights reserved.

j. Liquidated or other damages have accrued as a result of Contractor's failure to achieve Milestones, Substantial Completion, or final completion of the Work;

k. Liens have been filed in connection with the Work, except where Contractor has delivered a specific bond satisfactory to Owner to secure the satisfaction and discharge of such Liens; or

l. Other items entitle Owner to a set-off against the amount recommended.

2. If Owner imposes any set-off against payment, whether based on its own knowledge or on the written recommendations of Engineer, Owner will give Contractor immediate written notice (with a copy to Engineer) stating the reasons for such action and the specific amount of the reduction, and promptly pay Contractor any amount remaining after deduction of the amount so withheld. Owner shall promptly pay Contractor the amount so withheld, or any adjustment thereto agreed to by Owner and Contractor, if Contractor remedies the reasons for such action. The reduction imposed will be binding on Contractor unless it duly submits a Change Proposal contesting the reduction.

3. Upon a subsequent determination that Owner's refusal of payment was not justified, the amount wrongfully withheld will be treated as an amount due as determined by Paragraph 15.01.D.1 and subject to interest as provided in the Agreement.

F. For contracts in which the Contract Price is based on the Cost of Work, if Owner determines that progress payments made to date substantially exceed the actual progress of the Work (as measured by reference to the Schedule of Values), or present a potential conflict with the Guaranteed Maximum Price, then Owner may require that Contractor prepare and submit a plan for the remaining anticipated Applications for Payment that will bring payments and progress into closer alignment and take into account the Guaranteed Maximum Price (if any), through reductions in billings, increases in retainage, or other equitable measures. Owner will review the plan, discuss any necessary modifications, and implement the plan as modified for all remaining Applications for Payment.

15.02 Contractor's Warranty of Title

A. Contractor warrants and guarantees that title to all Work, materials, and equipment furnished under the Contract will pass to Owner free and clear of (1) all Liens and other title defects, and (2) all patent, licensing, copyright, or royalty obligations, no later than 7 days after the time of payment by Owner.

15.03 Substantial Completion

A. When Contractor considers the entire Work ready for its intended use Contractor shall notify Owner and Engineer in writing that the entire Work is substantially complete and request that Engineer issue a certificate of Substantial Completion. Contractor shall at the same time submit to Owner and Engineer an initial draft of punch list items to be completed or corrected before final payment.

B. Promptly after Contractor's notification, Owner, Contractor, and Engineer shall make an inspection of the Work to determine the status of completion. If Engineer does not consider the Work substantially complete, Engineer will notify Contractor in writing giving the reasons therefor.

1. If some or all of the Work has been determined not to be at a point of Substantial Completion and will require re-inspection or re-testing by Engineer, the cost of such re-

Copyright© 2018 National Society of Professional Engineers, American Council of Engineering Companies, and American Society of Civil Engineers. All rights reserved.

inspection or re-testing, including the cost of time, travel and living expenses, will be paid by Contractor to Owner. If Contractor does not pay, or the parties are unable to agree as to the amount owed, then Owner may impose a reasonable set-off against payments due under this Article 15.

C. If Engineer considers the Work substantially complete, Engineer will deliver to Owner a preliminary certificate of Substantial Completion which will fix the date of Substantial Completion. Engineer shall attach to the certificate a punch list of items to be completed or corrected before final payment. Owner shall have 7 days after receipt of the preliminary certificate during which to make written objection to Engineer as to any provisions of the certificate or attached punch list. If, after considering the objections to the provisions of the preliminary certificate, Engineer concludes that the Work is not substantially complete, Engineer will, within 14 days after submission of the preliminary certificate to Owner, notify Contractor in writing that the Work is not substantially complete, stating the reasons therefor. If Owner does not object to the provisions of the certificate, or if despite consideration of Owner's objections Engineer concludes that the Work is substantially complete, then Engineer will, within said 14 days, execute and deliver to Owner and Contractor a final certificate of Substantial Completion (with a revised punch list of items to be completed or corrected) reflecting such changes from the preliminary certificate as Engineer believes justified after consideration of any objections from Owner.

D. At the time of receipt of the preliminary certificate of Substantial Completion, Owner and Contractor will confer regarding Owner's use or occupancy of the Work following Substantial Completion, review the builder's risk insurance policy with respect to the end of the builder's risk coverage, and confirm the transition to coverage of the Work under a permanent property insurance policy held by Owner. Unless Owner and Contractor agree otherwise in writing, Owner shall bear responsibility for security, operation, protection of the Work, property insurance, maintenance, heat, and utilities upon Owner's use or occupancy of the Work.

E. After Substantial Completion the Contractor shall promptly begin work on the punch list of items to be completed or corrected prior to final payment. In appropriate cases Contractor may submit monthly Applications for Payment for completed punch list items, following the progress payment procedures set forth above.

F. Owner shall have the right to exclude Contractor from the Site after the date of Substantial Completion subject to allowing Contractor reasonable access to remove its property and complete or correct items on the punch list.

15.04 Partial Use or Occupancy

A. Prior to Substantial Completion of all the Work, Owner may use or occupy any substantially completed part of the Work which has specifically been identified in the Contract Documents, or which Owner, Engineer, and Contractor agree constitutes a separately functioning and usable part of the Work that can be used by Owner for its intended purpose without significant interference with Contractor's performance of the remainder of the Work, subject to the following conditions:

1. At any time, Owner may request in writing that Contractor permit Owner to use or occupy any such part of the Work that Owner believes to be substantially complete. If and when Contractor agrees that such part of the Work is substantially complete, Contractor,

Copyright© 2018 National Society of Professional Engineers, American Council of Engineering Companies, and American Society of Civil Engineers. All rights reserved.

Owner, and Engineer will follow the procedures of Paragraph 15.03.A through 15.03.E for that part of the Work.

2. At any time, Contractor may notify Owner and Engineer in writing that Contractor considers any such part of the Work substantially complete and request Engineer to issue a certificate of Substantial Completion for that part of the Work.

3. Within a reasonable time after either such request, Owner, Contractor, and Engineer shall make an inspection of that part of the Work to determine its status of completion. If Engineer does not consider that part of the Work to be substantially complete, Engineer will notify Owner and Contractor in writing giving the reasons therefor. If Engineer considers that part of the Work to be substantially complete, the provisions of Paragraph 15.03 will apply with respect to certification of Substantial Completion of that part of the Work and the division of responsibility in respect thereof and access thereto.

4. No use or occupancy or separate operation of part of the Work may occur prior to compliance with the requirements of Paragraph 6.04 regarding builder's risk or other property insurance.

15.05 Final Inspection

A. Upon written notice from Contractor that the entire Work or an agreed portion thereof is complete, Engineer will promptly make a final inspection with Owner and Contractor and will notify Contractor in writing of all particulars in which this inspection reveals that the Work, or agreed portion thereof, is incomplete or defective. Contractor shall immediately take such measures as are necessary to complete such Work or remedy such deficiencies.

15.06 Final Payment

A. *Application for Payment*

1. After Contractor has, in the opinion of Engineer, satisfactorily completed all corrections identified during the final inspection and has delivered, in accordance with the Contract Documents, all maintenance and operating instructions, schedules, guarantees, bonds, certificates or other evidence of insurance, certificates of inspection, annotated record documents (as provided in Paragraph 7.12), and other documents, Contractor may make application for final payment.

2. The final Application for Payment must be accompanied (except as previously delivered) by:

   a. all documentation called for in the Contract Documents;

   b. consent of the surety, if any, to final payment;

   c. satisfactory evidence that all title issues have been resolved such that title to all Work, materials, and equipment has passed to Owner free and clear of any Liens or other title defects, or will so pass upon final payment.

   d. a list of all duly pending Change Proposals and Claims; and

   e. complete and legally effective releases or waivers (satisfactory to Owner) of all Lien rights arising out of the Work, and of Liens filed in connection with the Work.

3. In lieu of the releases or waivers of Liens specified in Paragraph 15.06.A.2 and as approved by Owner, Contractor may furnish receipts or releases in full and an affidavit of Contractor

Copyright© 2018 National Society of Professional Engineers, American Council of Engineering Companies, and American Society of Civil Engineers. All rights reserved.

that: (a) the releases and receipts include all labor, services, material, and equipment for which a Lien could be filed; and (b) all payrolls, material and equipment bills, and other indebtedness connected with the Work for which Owner might in any way be responsible, or which might in any way result in liens or other burdens on Owner's property, have been paid or otherwise satisfied. If any Subcontractor or Supplier fails to furnish such a release or receipt in full, Contractor may furnish a bond or other collateral satisfactory to Owner to indemnify Owner against any Lien, or Owner at its option may issue joint checks payable to Contractor and specified Subcontractors and Suppliers.

B. *Engineer's Review of Final Application and Recommendation of Payment*: If, on the basis of Engineer's observation of the Work during construction and final inspection, and Engineer's review of the final Application for Payment and accompanying documentation as required by the Contract Documents, Engineer is satisfied that the Work has been completed and Contractor's other obligations under the Contract have been fulfilled, Engineer will, within 10 days after receipt of the final Application for Payment, indicate in writing Engineer's recommendation of final payment and present the final Application for Payment to Owner for payment. Such recommendation will account for any set-offs against payment that are necessary in Engineer's opinion to protect Owner from loss for the reasons stated above with respect to progress payments. Otherwise, Engineer will return the Application for Payment to Contractor, indicating in writing the reasons for refusing to recommend final payment, in which case Contractor shall make the necessary corrections and resubmit the Application for Payment.

C. *Notice of Acceptability*: In support of its recommendation of payment of the final Application for Payment, Engineer will also give written notice to Owner and Contractor that the Work is acceptable, subject to stated limitations in the notice and to the provisions of Paragraph 15.07.

D. *Completion of Work*: The Work is complete (subject to surviving obligations) when it is ready for final payment as established by the Engineer's written recommendation of final payment and issuance of notice of the acceptability of the Work.

E. *Final Payment Becomes Due*: Upon receipt from Engineer of the final Application for Payment and accompanying documentation, Owner shall set off against the amount recommended by Engineer for final payment any further sum to which Owner is entitled, including but not limited to set-offs for liquidated damages and set-offs allowed under the provisions of this Contract with respect to progress payments. Owner shall pay the resulting balance due to Contractor within 30 days of Owner's receipt of the final Application for Payment from Engineer.

15.07 Waiver of Claims

A. By making final payment, Owner waives its claim or right to liquidated damages or other damages for late completion by Contractor, except as set forth in an outstanding Claim, appeal under the provisions of Article 17, set-off, or express reservation of rights by Owner. Owner reserves all other claims or rights after final payment.

B. Upon receipt of final payment, the Contractor shall send Owner an "unconditional waiver and release upon final payment", which waives all claims and rights by the Contractor against Owner other than those pending matters that have been duly submitted as a Claim, or appealed under the provisions of Article 17.

Copyright© 2018 National Society of Professional Engineers, American Council of Engineering Companies, and American Society of Civil Engineers. All rights reserved.

C. In the event of a dispute between the Owner and the Contractor, the Owner may withhold from the final payment an amount of 150 percent of the disputed amount.

15.08 Correction Period

A. If within one year after the date of Substantial Completion, Owner gives Contractor written notice that any Work has been found to be defective, or that Contractor's repair of any damages to the Site or adjacent areas has been found to be defective, then after receipt of such notice of defect Contractor shall promptly, without cost to Owner and in accordance with Owner's written instructions:

1. correct the defective repairs to the Site or such adjacent areas;
2. correct such defective Work;
3. remove the defective Work from the Project and replace it with Work that is not defective, if the defective Work has been rejected by Owner, and
4. satisfactorily correct or repair or remove and replace any damage to other Work, to the work of others, or to other land or areas resulting from the corrective measures.

B. Owner shall give any such notice of defect within 60 days of the discovery that such Work or repairs is defective. If such notice is given within such 60 days but after the end of the correction period, the notice will be deemed a notice of defective Work under Paragraph 7.17.B.

C. If, after receipt of a notice of defect within 60 days and within the correction period, Contractor does not promptly comply with the terms of Owner's written instructions, or in an emergency where delay would cause serious risk of loss or damage, Owner may have the defective Work corrected or repaired or may have the rejected Work removed and replaced. Contractor shall pay all costs, losses, and damages (including but not limited to all fees and charges of engineers, architects, attorneys, and other professionals and all court or arbitration or other dispute resolution costs) arising out of or relating to such correction or repair or such removal and replacement (including but not limited to all costs of repair or replacement of work of others). Contractor's failure to pay such costs, losses, and damages within 10 days of invoice from Owner will be deemed the start of an event giving rise to a Claim under Paragraph 12.01.B, such that any related Claim must be brought within 30 days of the failure to pay.

D. In special circumstances where a particular item of equipment is placed in continuous service before Substantial Completion of all the Work, the correction period for that item may start to run from an earlier date if so provided in the Specifications.

E. Where defective Work (and damage to other Work resulting therefrom) has been corrected or removed and replaced under this paragraph, the correction period hereunder with respect to such Work will be extended for an additional period of one year after such correction or removal and replacement has been satisfactorily completed.

F. Contractor's obligations under this paragraph are in addition to all other obligations and warranties. The provisions of this paragraph are not to be construed as a substitute for, or a waiver of, the provisions of any applicable statute of limitation or repose.

Copyright© 2018 National Society of Professional Engineers, American Council of Engineering Companies, and American Society of Civil Engineers. All rights reserved.

DocuSign Envelope ID: D92FB7CA-DD9A-40FF-B59F-20FB66385E4F

ARTICLE 16—SUSPENSION OF WORK AND TERMINATION

16.01 Owner May Suspend Work

A. At any time and without cause, Owner may suspend the Work or any portion thereof for a period of not more than 90 consecutive days by written notice to Contractor and Engineer. Such notice will fix the date on which Work will be resumed. Contractor shall resume the Work on the date so fixed. Contractor shall be entitled to an adjustment in the Contract Price or an extension of the Contract Times directly attributable to any such suspension. Any Change Proposal seeking such adjustments must be submitted no later than 30 days after the date fixed for resumption of Work.

16.02 Owner May Terminate for Cause

A. The occurrence of any one or more of the following events will constitute a default by Contractor and justify termination for cause:

1. Contractor's persistent failure to perform the Work in accordance with the Contract Documents (including, but not limited to, failure to supply sufficient skilled workers or suitable materials or equipment, or failure to adhere to the Progress Schedule);

2. Failure of Contractor to perform or otherwise to comply with a material term of the Contract Documents;

3. Contractor's disregard of Laws or Regulations of any public body having jurisdiction; or

4. Contractor's repeated disregard of the authority of Owner or Engineer.

B. If one or more of the events identified in Paragraph 16.02.A occurs, then after giving Contractor (and any surety) 10 days' written notice that Owner is considering a declaration that Contractor is in default and termination of the Contract, Owner may proceed to:

1. declare Contractor to be in default, and give Contractor (and any surety) written notice that the Contract is terminated; and

2. enforce the rights available to Owner under any applicable performance bond.

C. Subject to the terms and operation of any applicable performance bond, if Owner has terminated the Contract for cause, Owner may exclude Contractor from the Site, take possession of the Work, incorporate in the Work all materials and equipment stored at the Site or for which Owner has paid Contractor but which are stored elsewhere, and complete the Work as Owner may deem expedient.

D. Owner may not proceed with termination of the Contract under Paragraph 16.02.B if Contractor within 7 days of receipt of notice of intent to terminate begins to correct its failure to perform and proceeds diligently to cure such failure.

E. If Owner proceeds as provided in Paragraph 16.02.B, Contractor shall not be entitled to receive any further payment until the Work is completed. If the unpaid balance of the Contract Price exceeds the cost to complete the Work, including all related claims, costs, losses, and damages (including but not limited to all fees and charges of engineers, architects, attorneys, and other professionals) sustained by Owner, such excess will be paid to Contractor. If the cost to complete the Work including such related claims, costs, losses, and damages exceeds such unpaid balance, Contractor shall pay the difference to Owner. Such claims, costs, losses, and damages incurred by Owner will be reviewed by Engineer as to their

Copyright© 2018 National Society of Professional Engineers, American Council of Engineering Companies, and American Society of Civil Engineers. All rights reserved.

reasonableness and, when so approved by Engineer, incorporated in a Change Order. When exercising any rights or remedies under this paragraph, Owner shall not be required to obtain the lowest price for the Work performed.

F. Where Contractor's services have been so terminated by Owner, the termination will not affect any rights or remedies of Owner against Contractor then existing or which may thereafter accrue, or any rights or remedies of Owner against Contractor or any surety under any payment bond or performance bond. Any retention or payment of money due Contractor by Owner will not release Contractor from liability.

G. If and to the extent that Contractor has provided a performance bond under the provisions of Paragraph 6.01.A, the provisions of that bond will govern over any inconsistent provisions of Paragraphs 16.02.B and 16.02.D.

16.03 Owner May Terminate for Convenience

A. Upon 7 days' written notice to Contractor and Engineer, Owner may, without cause and without prejudice to any other right or remedy of Owner, terminate the Contract. In such case, Contractor shall be paid for (without duplication of any items):

1. completed and acceptable Work executed in accordance with the Contract Documents prior to the effective date of termination, including fair and reasonable sums for overhead and profit on such Work;

2. expenses sustained prior to the effective date of termination in performing services and furnishing labor, materials, or equipment as required by the Contract Documents in connection with uncompleted Work, plus fair and reasonable sums for overhead and profit on such expenses; and

3. other reasonable expenses directly attributable to termination, including costs incurred to prepare a termination for convenience cost proposal.

B. Contractor shall not be paid for any loss of anticipated profits or revenue, post-termination overhead costs, or other economic loss arising out of or resulting from such termination.

16.04 Contractor May Stop Work or Terminate

A. If, through no act or fault of Contractor, (1) the Work is suspended for more than 90 consecutive days by Owner or under an order of court or other public authority, or (2) Engineer fails to act on any Application for Payment within 30 days after it is submitted, or (3) Owner fails for 30 days to pay Contractor any sum finally determined to be due, then Contractor may, upon 7 days' written notice to Owner and Engineer, and provided Owner or Engineer do not remedy such suspension or failure within that time, terminate the contract and recover from Owner payment on the same terms as provided in Paragraph 16.03.

B. In lieu of terminating the Contract and without prejudice to any other right or remedy, if Engineer has failed to act on an Application for Payment within 30 days after it is submitted, or Owner has failed for 60 days to pay Contractor any sum finally determined to be due, Contractor may, 7 days after written notice to Owner and Engineer, stop the Work until payment is made of all such amounts due Contractor, including interest thereon. The provisions of this paragraph are not intended to preclude Contractor from submitting a Change Proposal for an adjustment in Contract Price or Contract Times or otherwise for expenses or damage directly attributable to Contractor's stopping the Work as permitted by this paragraph.

Copyright© 2018 National Society of Professional Engineers, American Council of Engineering Companies, and American Society of Civil Engineers. All rights reserved.

ARTICLE 17—FINAL RESOLUTION OF DISPUTES

17.01 Methods and Procedures

Except as otherwise provided in the Contract Documents and by law, in the event of a dispute between OWNER and CONTRACTOR regarding any part of the Contract Documents or the performance of the Work, the parties will use the following procedure to resolve the dispute. Either party may notify the other that for purposes of time limits herein, the dispute resolution process has been instituted. The existence of any such dispute does not excuse continued performance under the Contract Documents.

A. CONTRACTOR and OWNER will first attempt to resolve the dispute through discussion and negotiation.

B. If the project managers are unable to resolve the dispute within 20 days, the matter will be referred to the next managerial level of the respective parties.

C. If the dispute is not resolved within 30 days of referral to management, the parties will attempt in good faith to resolve the dispute through mediation. Each party will bear its own costs of mediation and will share equally in common costs.

D. If the dispute has not been resolved through mediation within 60 days of commencement of the mediation, either party may initiate litigation of the dispute or exercise such rights and remedies as either may have under the Contract Documents or the law.

E. The parties may mutually agree to extend the time limits, or otherwise modify the procedure set forth above.

F. Notwithstanding the above procedure, either party may seek injunctive relief to prevent irreparable harm.

ARTICLE 18—MISCELLANEOUS

18.01 Giving Notice

A. Whenever any provision of the Contract requires the giving of written notice to Owner, Engineer, or Contractor, it will be deemed to have been validly given only if delivered:

1. in person, by a commercial courier service or otherwise, to the recipient's place of business;
2. by registered or certified mail, postage prepaid, to the recipient's place of business; or
3. by e-mail to the recipient, with the words "Formal Notice" or similar in the e-mail's subject line.

18.02 Computation of Times

A. When any period of time is referred to in the Contract by days, it will be computed to exclude the first and include the last day of such period. If the last day of any such period falls on a Saturday or Sunday or on a day made a legal holiday by the law of the applicable jurisdiction, such day will be omitted from the computation.

Copyright© 2018 National Society of Professional Engineers, American Council of Engineering Companies, and American Society of Civil Engineers. All rights reserved.

18.03 Cumulative Remedies

A. The duties and obligations imposed by these General Conditions and the rights and remedies available hereunder to the parties hereto are in addition to, and are not to be construed in any way as a limitation of, any rights and remedies available to any or all of them which are otherwise imposed or available by Laws or Regulations, by special warranty or guarantee, or by other provisions of the Contract. The provisions of this paragraph will be as effective as if repeated specifically in the Contract Documents in connection with each particular duty, obligation, right, and remedy to which they apply.

18.04 Limitation of Damages

A. With respect to any and all Change Proposals, Claims, disputes subject to final resolution, and other matters at issue, neither Owner nor Engineer, nor any of their officers, directors, members, partners, employees, agents, consultants, or subcontractors, shall be liable to Contractor for any claims, costs, losses, or damages sustained by Contractor on or in connection with any other project or anticipated project.

18.05 No Waiver

A. A party's non-enforcement of any provision will not constitute a waiver of that provision, nor will it affect the enforceability of that provision or of the remainder of this Contract.

18.06 Survival of Obligations

A. All representations, indemnifications, warranties, and guarantees made in, required by, or given in accordance with the Contract, as well as all continuing obligations indicated in the Contract, will survive final payment, completion, and acceptance of the Work or termination of the Contract or of the services of Contractor.

18.07 Controlling Law

A. This Contract is to be governed by the law of the state in which the Project is located.

18.08 Assignment of Contract

A. Unless expressly agreed to elsewhere in the Contract, no assignment by a party to this Contract of any rights under or interests in the Contract will be binding on the other party without the written consent of the party sought to be bound; and, specifically but without limitation, money that may become due and money that is due may not be assigned without such consent (except to the extent that the effect of this restriction may be limited by law), and unless specifically stated to the contrary in any written consent to an assignment, no assignment will release or discharge the assignor from any duty or responsibility under the Contract.

18.09 Successors and Assigns

A. Owner and Contractor each binds itself, its successors, assigns, and legal representatives to the other party hereto, its successors, assigns, and legal representatives in respect to all covenants, agreements, and obligations contained in the Contract Documents.

18.10 Headings

A. Article and paragraph headings are inserted for convenience only and do not constitute parts of these General Conditions.

Copyright© 2018 National Society of Professional Engineers, American Council of Engineering Companies, and American Society of Civil Engineers. All rights reserved.

DocuSign Envelope ID: D92FB7CA-DD9A-40FF-B59F-20FB66385E4F

18.11 Severability

A. Any provision of this Contract which shall prove to be invalid, void or illegal shall in no way affect, impair or invalidate any other provision hereof, and such remaining provisions shall remain in full force and effect.

Copyright© 2018 National Society of Professional Engineers, American Council of Engineering Companies, and American Society of Civil Engineers. All rights reserved.

DocuSign Envelope ID: D92FB7CA-DD9A-40FF-B59F-20FB66385E4F

(THIS PAGE LEFT BLANK INTENTIONALLY)

Copyright© 2018 National Society of Professional Engineers, American Council of Engineering Companies, and American Society of Civil Engineers. All rights reserved.

DocuSign Envelope ID: D92FB7CA-DD9A-40FF-B59F-20FB66385E4F

SECTION 00 73 43 – OREGON PREVAILING WAGE RATES

FOR

MAHLER WATER RECLAMATION FACILITY IMPROVEMENTS, PHASE 1

The applicable Oregon minimum prevailing wage rates are contained in the publication Prevailing Wage Rates for Public Works Contracts in Oregon July 1, 2022 and can be found at the following website: http://www.oregon.gov/BOLI , and are incorporated herein as though fully set forth as of the date the Bidding Documents are first advertised.

The following Amendments to the Prevailing Wage Rates for Public Works Contracts in Oregon also apply;

A. July 1, 2022 Amendments

DocuSign Envelope ID: D92FB7CA-DD9A-40FF-B59F-20FB66385E4F

(THIS PAGE LEFT BLANK INTENTIONALLY)

DocuSign Envelope ID: D92FB7CA-DD9A-40FF-B59F-20FB66385E4F

SECTION 01 10 00

SUMMARY OF WORK

PART 1 - GENERAL

1.01 SECTION INCLUDES

A. General description of the Project and the Work to be performed by the Contractor.

1.02 WORK COVERED BY CONTRACT

A. The Work covered under this Contract will be performed at the site of the City of Sweet Home's Mahler Water Reclamation Facility (WRF). The project location is indicated on the Drawings.

B. The Work to be performed by the Contractor generally includes:

1. Furnishing all labor, superintendence, materials, power, water, tools, equipment, and services required by the Contract Documents or required to complete the Work.

2. Coordinate work of all trades.

3. Furnishing and installing miscellaneous items incidental to or necessary for completion of the Work, whether these items are specifically indicated in the Contract Documents or not.

C. The Work consists of construction of the following items:

1. Improvements and modifications to the City of Sweet Home Mahler WRF includes furnishing all labor, materials, and equipment necessary for the construction of new influent pump station (IPS), new IPS piping and appurtenances, new Main Electrical and Blower (MEB) Building, new standby engine generator with automatic transfer switch, new electrical service entrance, installation of owner-supplied electrical Motor Control Centers (MCCs) and plant control panels. Site work includes demolition of existing trees, structures and roadways, general excavation with onsite and offsite disposal, installation of upper plant area aggregate base rock. Site piping will include connection and re-routing existing influent sanitary sewers to the new IPS, force mains and gravity pipelines that will be completed during Phase 2 construction.

1.03 OTHER CONTRACTS

A. The Owner may be undertaking other projects at the plant site simultaneously with the Work to be completed under this project. Coordination with the contractors undertaking related work or un-related work within the plant is the responsibility of the Contractor.

B. Electrical and Control System Integration: The Automation Group (TAG) is the Owner's Integrator-of-Record. TAG shall furnish and install the following: (5) Influent Pump VFDs and (2) Harmonic filter feeder buckets, MCC-2, MCC-3, Network Interface Panel (NIP)-200, NIP-300, Main Network Panel (MNP)-100, Control Panel (CP)-300, PDP-110-1, PDP-110-2 and PDP-110-03. The Electrical contractor shall install the Owner-provided electrical and controls equipment listed and all wiring including Ethernet Cabling to the New PLC. The electrical contractor shall be present for and assist with the Process Control

DocuSign Envelope ID: D92FB7CA-DD9A-40FF-B59F-20FB66385E4F

Equipment Startup and Commissioning. See Section 01 12 16 and the Drawings for detailed Contractor installation requirements related to Owner-supplied equipment.

1.04 SPECIFICATION LANGUAGE

A. Specifications may be written in the imperative mood in streamlined form in accordance with practices and principals of the Construction Specifications Institute.

B. Imperative language is directed to the Contractor unless specifically noted otherwise.

C. The words “shall be” are included by inference where a colon (:) is used within sentences or phrases.

1.05 REGULATORY REQUIREMENTS

A. Comply with all Federal, State, and local laws, regulations, codes, and ordinance applicable to the work.

B. References in the Contract Documents to local codes shall mean those of City of Sweet Home.

C. Other standards and codes that apply to the work are designated in the Specifications.

1.06 ACCESS BY GOVERNMENT OFFICIALS

A. Authorized representatives of governmental agencies shall have access to the work area at all times. Provide proper facilities for access and inspection.

PART 2 - PRODUCTS (NOT USED)

PART 3 - EXECUTION (NOT USED)

END OF SECTION

DocuSign Envelope ID: D92FB7CA-DD9A-40FF-B59F-20FB66385E4F

SECTION 01 12 16

WORK SEQUENCE AND CONSTRAINTS

PART 1 - GENERAL

1.01 SECTION INCLUDES

A. Schedule requirements, construction constraints, and a suggested Work sequence for specific elements of the Project.

1.02 REFERENCED SECTIONS

A. The following Section is reference in this Section

1. Section 01 99 00 – Reference Forms

1.03 GENERAL SEQUENCING REQUIREMENTS

A. The sequencing requirements and construction constraints described are critical elements of the Work and are presented to underscore the importance of proper management, planning, scheduling, coordination, and execution of the Work.

B. Sequencing requirements and construction constraints have been defined in this Section for only certain structures, facilities, and elements of the Work. All work, whether or not addressed in this Section, shall be governed by applicable specified requirements. If additional shutdown constraints are necessary to allow implementation of Contractor's construction procedures and schedule, the Engineer will establish such constraints.

C. Contractor's Construction Schedule:

1. Clearly illustrate the proposed sequence of construction.

2. Conform to the sequencing requirements and limitations specified in this Section.

3. Modify or adapt the suggested sequencing as necessary to complete the project provided all environmental and service continuity requirements are met.

1.04 OPERATIONAL CONTINUITY

A. The City of Sweet Home owns and operates a wastewater treatment facility. The Work under this project will interface with this existing facility.

B. The existing wastewater collection system and treatment plant continuously receives, conveys and treats wastewater. Do not interrupt functions necessary to maintain operation of these facilities except as approved by the Engineer through review of the Contractor's Facility Outage Plan and as specified herein.

C. Coordinate the Work to minimize interference and interruption of the normal operation of the Owner's existing facilities through proper planning and by making temporary connections.

1.05 PERMIT VIOLATIONS

A. The wastewater treatment facilities must continuously comply with the Owner's National Pollutant Discharge Elimination System (NPDES) permit requirements.

DocuSign Envelope ID: D92FB7CA-DD9A-40FF-B59F-20FB66385E4F

B. Construction of the Work under this Contract must be undertaken in compliance with the terms and conditions of various permits that the Owner has obtained for this project.

C. In the event NPDES permit violations or spills are caused or, in the Owner's opinion, will be caused by the Contractor's operations, the Owner shall be entitled to immediately employ others to stop the violations or potential spills without giving written notice to the Contractor. All costs incurred by the Owner to stop or prevent permit violations shall be paid by the Contractor.

D. Under no circumstances shall wastewater be discharged, bypassed or spilled to creeks, drainage ditches, or other waterways; storm drain systems; or the ground surface. In the event accidental discharge or bypassing is caused by the Contractor's operations, the Owner shall immediately be entitled to employ others to stop the bypassing without giving written notice to the Contractor. All costs incurred by the Owner to stop or prevent the bypass shall be paid by the Contractor.

E. Penalties imposed on and costs incurred by the Owner as a result of violations caused by the actions of the Contractor, his employees, or subcontractors, shall be borne in full by the Contractor, including legal fees and other expenses to the Owner resulting directly or indirectly from Contractor's actions.

1. Under the terms of the NPDES permit issued to the Owner, the Owner is liable for the following penalties:

a. NPDES Permit No. 101697 $10,000 per day for each violation

1.06 ACCESS

A. The existing facility where Contractor's work is to be done will be occupied by the Owner throughout the construction period. Access to the site by the Owner's personnel is required for daily operations, maintenance, and administration. Additionally, regular traffic into and out of the site is to be expected.

B. Contractor shall provide all necessary access to the Owner's personnel as required to safely and efficiently operate/maintain the facilities. At all times during the Contract duration, the Contractor is to provide the Owner's personnel and representatives safe and immediate access to all process control equipment.

C. Contractor shall provide for unimpeded access for all delivery vehicles transporting materials, chemicals and equipment to the facility for the Owner's operations. Contractor shall coordinate the work to avoid interference with vehicular access to the existing plant site and normal operation of plant equipment and processes.

1.07 FACILITY OUTAGE PLAN

A. Prepare and submit a detailed Facility Outage Plan when removal of an existing facility from service is necessary to complete the Work.

B. Submit the Facility Outage Plan to the Engineer for review and approval at least 3 weeks prior to the scheduled outage. Develop the Facility Outage Plan to satisfy the Work Sequence restrictions and conditions specified in this Section. Do not proceed with any Work involving facility outages until the Outage Plan has been approved by the Engineer.

C. The Facility Outage Plan shall describe, as applicable, a listing of existing facilities that will be taken out of service, methods for preventing bypassing of other treatment units, the

DocuSign Envelope ID: D92FB7CA-DD9A-40FF-B59F-20FB66385E4F

length of time required to complete the operation, and the necessary personnel and equipment which will be provided in order to successfully complete the operation.

D. A System Outage Request (SOR) form shall accompany each outage or bypass plan (See Section 01 99 00). Coordinate the outage schedule with the overall construction schedule.

1.08 REMOVING EXISTING FACILITIES FROM SERVICE

A. Existing systems or individual equipment items shall be isolated, decommissioned, de-energized, or depressurized only by the Owner's operations personnel. This work will be done in accordance with the Facility Outage Plan and schedule prepared by the Contractor.

B. The Contractor shall design and provide all necessary bulkheads and support structures to allow isolation of work areas from tanks, pipes, and/or channels that are in service. Bulkheads and support structures shall conform to applicable OSHA requirements.

C. The Contractor shall provide all necessary temporary pumps, piping, power, electrical wiring, controls, and labor during and subsequent to all shutdown activities as required. Maintain adequate access to the plant facilities, utilities, and equipment during construction to allow continued operation and maintenance by Owner's personnel to take place.

D. Prior to any shutdown or flow diversion, all materials, bypass pumps, fittings, supports, equipment and tools shall be on the site and all necessary skilled labor scheduled prior to starting any connection work.

E. If valves or gates need to be opened or closed, or mechanical equipment turned off or turned on, or similar operations performed to allow construction to proceed, this is to be performed by the Owner's operations staff working in coordination with Contractor personnel. Valves and gates that may be used to isolate lines and facilities may not completely seal. Contractor shall allow for leakage in planning the Work. Contractor shall clean the work areas as required to perform the work.

PART 2 - PRODUCTS (NOT USED)

PART 3 - EXECUTION

3.01 WORK COORDINATION

A. Schedule and coordinate the overall Work and construction operations, including the work of subcontractors and the timely provision of products and supplies.

B. Perform Work in an orderly and logical sequence. Individual specification Sections may identify specific requirements that are related to Work sequence. These types of constraints are not repeated in this Section but shall be followed by the Contractor.

3.02 WORK CONSTRAINTS

A. Work Hours

1. Except as otherwise required for the safety or protection of persons and except as otherwise stated in the Contract Documents, Work may only be performed Monday through Friday during the hours of 7:00 am and 3:30 pm. Contractor will

DocuSign Envelope ID: D92FB7CA-DD9A-40FF-B59F-20FB66385E4F

not perform Work on a Saturday, Sunday or any legal holiday defined by the City of Sweet Home without written consent from the Owner.

2. Legal holidays are defined as:

   a. New Year's Day on January 1.
   b. President's Day on the third Monday on February
   c. Memorial Day on the last Monday in May.
   d. Independence Day on July 4.
   e. Labor Day on the first Monday in September.
   f. Veteran's Day on November 11th (unless 11/11 is on a weekend)
   g. Thanksgiving Day on the fourth Thursday in November.
   h. Day after Thanksgiving
   i. Christmas Day on December 25.
   j. When a holiday falls on Sunday, the following Monday is recognized as the legal holiday. When a holiday falls on a Saturday, the preceding Friday is recognized as the legal holiday.

B. Contractor shall undertake the Work in compliance with the constraints defined in the following paragraphs:

1. Sewer Diversion from existing Influent Pump Station to New Influent Pump Station

   a. The contractor shall provide Sewage Bypass Pumping Equipment Control equipment to pump flows from incoming sewers as required during the diversion of incoming sewers from the existing influent pump station to the new influent pump station.

2. Influent Pump Station Start-up

   a. The influent wastewater to the plant shall be pumped to Aeration Basins 1 and 2 through the two (2) new force main pipes, 24" and 12". A temporary 16" HDPE force main will connect the new force mains at the connection point shown on the drawings.
   b. The existing influent pump station and the new influent pump station shall be fully functional at the end of facility commissioning, except that sewer flows will be diverted to the new influent pump station.

3.03 POTENTIAL WORK SEQUENCE

A. The following work sequence is a potential means of constructing the project, and shall be followed in general unless another suitable method of completing the work is developed by the Contractor and approved by the Owner. This potential work sequence is general in nature and does not include all work activities required by this Contract for completion of the work. The potential work sequence shall be coordinated with the requirements of other specification Sections and the Drawings in order to complete the Work in a timely and satisfactory manner.

DocuSign Envelope ID: D92FB7CA-DD9A-40FF-B59F-20FB66385E4F

B. Maintenance of Access During Construction

1. Maintain access to the existing boat ramp north of the WRF site at all times during construction.

2. Maintain existing plant loops for chemical deliveries and dewatered cake solids dumpster removal at all times during construction.

3. Coordinate with Owner for installation of pipelines in the area of the existing plant gated accesses and driveways. At the end of each work day provide steel plating or backfill trenches with crushed rock to surface to maintain a minimum 12 ft. wide looped roadway around the Lower Plant site.

4. Coordinate with Owner for installation of temporary water meter for use of City water throughout construction.

5. New Influent Pump Station and Force Mains Special Constraints and Requirements

   a. Complete IPS conversion in between July 1 and October 1 (summer flows).

   b. Demolish existing backwash and storage basins as shown on the Drawings to facilitate construction of the new influent pump station wet well.

      1) Contractor shall follow structural drawings, sawcut and carefully remove existing structure east of the existing IPS wet well.

C. Potential Work Sequence for Phase 1 WRF Construction

1. Prior to beginning construction of the new influent pump station wet well, demolish existing backwash and storage basins in lower plant area, install temporary piping and abandon existing piping in accordance with the Contract Documents.

2. Complete construction of new reinforced concrete influent pump station wet well in accordance with the Contract Documents.

3. Construct new SSMH-1 and sewer pipe connecting it to the influent pump station wet well.

4. Excavate and expose existing 18”, 21” and 24” gravity influent sewers conveying raw wastewater to the existing influent pump station.

5. Construct reinforced concrete bases and manhole sections for SSMH-2, SSMH-3, and SSMH-4 over existing gravity influent sewers, leaving the top of the new manhole sections open (e.g. do not add manhole cover with frame and grate). Install manhole channels in new manholes up to the centerline of the existing pipeline, or as indicated in the drawings.

6. Construct new gravity sewer pipelines for SSMH-2, SSMH-3, and SSMH-4 to connect existing influent sewers to the new influent pump station as shown on the Drawings. Influent will continue to flow to the existing influent pump station until connections to new influent pump station are completed in coordination with the Owner.

DocuSign Envelope ID: D92FB7CA-DD9A-40FF-B59F-20FB66385E4F

7. Complete mechanical, electrical and controls construction for the new influent pump station in accordance with the Contract Documents.

8. Install new influent pump station force main as shown on the Drawings, including temporary diversion piping and valves for connection to the existing aeration basin.

    a. Develop and submit a construction sequencing plan, as required in Piping Systems, for the force main and other pipes in the Critical Piping Area. The Critical Piping Area is shown on the Drawings.

9. Complete new influent pump station functional testing and startup in accordance with the Contract Documents using plant potable water. Contractor shall be responsible for providing the temporary plant potable water connection to the new influent pump station for testing and startup. Alternatively, secondary effluent from the plant secondary clarifiers or Chlorine Contact Basin (CCB) may be pumped to the influent pump station, if approved by plant staff.

10. Complete re-routing and diversion of existing influent sewers to the new influent pump station between July and September 2023 and during low flow hours from 10:00PM to 6:00AM. Submit a Maintenance of Plant Operations (MOPO) form for review and approval by Owner and Engineer a minimum of 3 weeks prior to influent diversion activities.

11. Diversion and new influent pump station operation with raw wastewater will initially proceed with flows from SSMH-2 only. Remove the top to centerline of the existing 21” influent sewer in SSMH-2. Install temporary plugs MH inlet and outlet. Once isolated, install grout plug in SSMH-2 outlet to the existing influent pump station and complete additional concrete channel work with rapid-setting concrete or grout mix. Once the outlet plug has cured for the time required by the Engineer, remove temporary plugs and divert flows from MH-XXX to the new influent pump station.

12. Operate the existing influent pump station and new influent pump station in parallel for a period of 7 days without any complications, mechanical or programming issues. If required for any reason, Contractor shall divert flows back to the existing IPS in order to facilitate any additional modifications needed for new IPS operation, including SCADA programming modifications.

13. Once the new influent pump station has been cleared by the Engineer to accept the full influent wastewater flows, complete the diversion to new influent pipelines in SSMH-3 and SSMH-4 following the same procedure as used for SSMH-2 diversion.

D. Existing Electrical Building

1. Install and connect temporary standby generator along with new automatic transfer switch.

2. Complete startup and testing of the temporary standby generator.

3. Remove existing standby generator from inside the building.

4. Complete installation of MCC-300 and all associated work inside the Existing Electrical Building.

DocuSign Envelope ID: D92FB7CA-DD9A-40FF-B59F-20FB66385E4F

5. Install Main PLC supplied by Owner and Owner's Integrator-of-Record.

6. Complete testing of all new electrical equipment in the Existing Electrical Building prior to functional testing of the new influent pump station.

E. Main Electrical and Blower Building (MEB)

1. Relocate existing public restroom as indicated on Drawings and connect to new 8" SS. Connect new 8" SS to existing influent pump station on a temporary basis, if required.

2. Relocate existing power pole in location serving public restroom. Coordinate with the electric utility as required and maintain power to existing main plant entrance gate. Coordinate manually opening and closing entrance gate with City staff if power is lost for electrical cut over to new electrical service.

3. Complete MEB construction in accordance with the Contract Documents, including installation of new transformer, service entrance, switchgear, standby generator and ATS and MCC-100.

4. Coordinate installation of new transformer and electric service with the Electric Utility, as required.

5. Complete start-up and testing of all electrical equipment.

6. Construct raceways and conductors between the MEB and South Electrical Building in accordance with the Drawings.

7. Complete cut over of electrical service to the South Electrical Building within an 8-hour period.

8. Demolish existing electrical service feeding the South Electrical Building in accordance with the Contract Documents.

9. Remove the temporary standby generator and coordinate return of equipment to Sweet Home City Hall with Owner.

   a. Test the generator within one week of moving the generator to the new location.

   b. Prior to moving the temporary generator, disconnect and otherwise make ready for moving the generator according to the manufacturer and supplier's recommendations. If necessary, drain the integral fuel tank of fuel.

   c. Construct a new concrete pad at the City Hall location prior to moving the generator to that location.

END OF SECTION

DocuSign Envelope ID: D92FB7CA-DD9A-40FF-B59F-20FB66385E4F

(THIS PAGE LEFT BLANK INTENTIONALLY)

DocuSign Envelope ID: D92FB7CA-DD9A-40FF-B59F-20FB66385E4F

SECTION 01 29 02

MEASUREMENT AND PAYMENT

PART 1 - GENERAL

1.01 SECTION INCLUDES

A. Methods of measurement and payment for specific items of Work under this Contract. Refer also to General Conditions for administrative aspects of payments by the Owner to the Contractor.

1.02 BID COMPONENTS AND PAYMENT

A. The Bid Form is comprised of the following components:

1. Lump Sum Work
2. Unit Price Work

B. Contractor's cost for "Lump Sum Work" shall cover all Work indicated by the Contract Documents with the exception of Additional Unit Price Work as indicated on the Bid Form. Lump Sum Work will be paid for on a progress payment basis in accordance with the provisions of the General Conditions.

1. Lump Sum work shall include quantities as specified herein for the following Unit Price Items:

a. General Excavation with Off Site Disposal
b. Rock Excavation
c. Sewer Bypass Pumping
d. Excavation Dewatering

C. Additive and Deductive Unit Price Work is Work indicated on the Drawings or specified that results in increased or reduced quantities from the Base Bid Quantity. The price of each unit of Work is to be defined by the Bidder in the Bid Form and shall include all materials, labor, equipment, and incidentals required to complete each Work Item. Work Items established for this Work have been identified on the Bid Form and are described as follows:

1. General Excavation – Unclassified with Off Site Disposal

a. Contractor shall include 240 cubic yards of General Excavation – Unclassified with Off Site Disposal in Bid Price for Lump Sum Work.
b. Unsuitable fill material shall be considered in quantities for General Excavation – Unclassified with Off Site Disposal.
c. Payment for additional General Excavation – Unclassified with Off Site Disposal shall be in accordance with the Contractor's Bid for differences in actual construction quantities, either additive or deductive.
d. Truck measure shall be used for Off Site Disposal quantities assuming trucks are filled to 75% capacity.

DocuSign Envelope ID: D92FB7CA-DD9A-40FF-B59F-20FB66385E4F

2. Rock Excavation

a. Rock Excavation is defined in Specification 31 23 16.26, Part 1.03.

b. Contractor shall include Rock Excavation quantifies in the Lump Sum Bid as follows:

1) Influent Pump Station: 80 cubic yards

2) Pipelines: 40 cubic yards

c. Payment for additional Rock Excavation shall be in accordance with the Contractor's Bid for differences in actual construction quantities, either additive or deductive for those excavation quantities meeting the definition of Rock Excavation. 01 57

d. Owner may elect to use excavated rock for onsite engineered fill.

e. Boring locations, depth to bedrock and rock hardness testing data is included in the Geotechnical Data Report (GDR).

D. Excavation Dewatering

1. Provide Excavation Dewatering in accordance with Specification 31 23 19 and meeting all requirements.

2. Contractor shall include 80 Days for Excavation Dewatering Bid Price for Lump Sum Work.

3. Unit costs for additional Excavation Dewatering shall be for all associated Work, regardless of the system size.

4. Payment for additional Excavation Dewatering shall be in accordance with the Contractor's Bid for differences in actual construction quantities, either additive or deductive on a unit price basis measured in Days.

E. Sewer Bypass Pumping

1. Provide Sewer Bypass Pumping in accordance with Specification 01 57 29 Sewer Bypass Pumping and meeting all requirements.

2. Contractor shall include 15 Days for Sewer Bypass Pumping in the Bid Price for Lump Sum Work.

3. Unit costs for additional Sewer Bypass Pumping shall be for all associated Work, regardless of the system size.

4. Payment for additional Sewer Bypass Pumping shall be in accordance with the Contractor's Bid for differences in actual construction quantities, either additive or deductive on a unit price basis measured in Days.

F. Payment for mobilization/demobilization shall not exceed five percent (5%) of the total bid price. Payment for mobilization/demobilization in excess of this amount shall be paid after overall project substantial completion is achieved and demobilization begins. See Section 01 71 13 for additional information on mobilization/demobilization and as listed below.

1. Contractor may apply for payment of demobilization after the overall project substantial completion is achieved and the project begins to demobilize. Demobilization items shall include:

DocuSign Envelope ID: D92FB7CA-DD9A-40FF-B59F-20FB66385E4F

a. Disconnecting all temporary construction utilities.

b. Removal of all temporary construction facilities.

c. Post-construction meeting.

d. All other work as required for project closeout.

1.03 SCHEDULE OF VALUES

A. Format: Identify each line item in the Schedule of Values with number and title of the major Specification sections. Submit typed schedule on 8½ x 11-inch paper; Contractor's standard form or media-driven printout will be considered on request.

B. At the pre-construction meeting, submit a preliminary Schedule of Values to the Owner’s Representative for review. The Contractor shall incorporate any review comments from the Owner’s Representative, and submit a final Schedule of Values at least 21 days prior to submitting the first Application for Payment.

C. The Schedule of Values shall assign a fair, reasonable and equitable dollar value for each activity on the Contractor's construction schedule. The Schedule of Values shall include anticipated progress payments for each item in the bid schedule through the final payment. In addition, a detailed breakdown of lump sum prices shall be included in the Schedule of Values.

D. The Schedule of Values shall specifically indicate installed cost for materials and equipment for each bid and sub-bid item.

E. Each activity's assigned value shall consist of labor, equipment and materials cost and a prorata contribution to overhead and profit. Breakdown shall be so organized as to facilitate assessment of work and payment of subcontractors.

F. The Schedule of Values shall be broken down into sub-part line items of approximately $10,000 with the sum of sub-parts equal to the lump sum price of the activity. The sum of all activities shall equal the lump sum contract price.

G. If, in the opinion of the Owner or Engineer, the Schedule of Values is not balanced, the Contractor shall provide documentation substantiating the cost allocations of those activities believed to be unbalanced. Cost allocation will be considered unbalanced if an activity on the construction schedule has been assigned a disproportionate allocation of labor, direct, or overhead and profit costs which result in progress payment request(s) which would create a condition where insufficient funds are available to complete the unfinished work. Upon request by Owner, support values shall be given with data that will substantiate their accuracy. Upon Owner's request, the Contractor shall submit additional detailed cost information.

H. Upon acceptance of the Schedule of Values, it shall be used as a basis for processing all progress payment requests.

1.04 PROGRESS PAYMENT REQUESTS

A. Submit Progress Payment Requests during the course of the project in conformance with the General Condition.

DocuSign Envelope ID: D92FB7CA-DD9A-40FF-B59F-20FB66385E4F

1.05 PROGRESS RECORD DRAWINGS

A. Submittal of progress record drawings of the project will be required at 25%, 50%, 75%, and substantial completion of the project. These submittals shall accompany the progress payment request and will be a condition of processing payment requests.

PART 2 - PRODUCTS (NOT USED)

PART 3 - EXECUTION (NOT USED)

END OF SECTION

DocuSign Envelope ID: D92FB7CA-DD9A-40FF-B59F-20FB66385E4F

SECTION 01 31 15

PARTNERING

PART 1 - GENERAL

1.01 GENERAL

A. Owner intends to encourage the foundation of a cohesive partnership between the Owner, Contractor and Engineer. This partnership will be structured to draw on the strengths of each organization to identify and achieve reciprocal goals.

B. Project partnering recognizes that Owner, Contractor, Engineer all hold in common the goal of successful completion of this project, including the following specific goals:

1. Construction of a facility that meets the project performance standards as defined in the Specifications.

2. Completion of the Project on schedule.

3. Conformance to budgetary requirements and limitations.

C. It is recognized that safety, liability limitations, avoidance of litigation, reputation, good will, and other factors are of significant importance to all parties involved.

D. Through partnering, it is the Owner's intent that the parties will develop an open, communicative relationship such that agreement can be reached on the primary goals of the Project and the methods that will be used to accomplish them. The parties will mutually develop a communication framework and a conflict resolution system to be used throughout the Project.

E. The establishment of a partnering relationship shall not change or modify the Terms and Conditions of the Contract and will not relieve the parties of the requirements of the Contract.

1.02 SCHEDULING

A. Initial Workshop:

1. An initial 1/2-day workshop will be scheduled by the Owner within 14 days after the Notice to Proceed, but prior to beginning Work onsite.

2. The workshop will be held at an agreed on location.

B. Additional Sessions: Additional 2 hour partnering sessions shall be held every month throughout the Project in order to confirm the relationship and assure the partnering effort continues to be successful. These sessions may take the form of a formal evaluation measuring success towards meeting the established goals and objectives

1.03 ATTENDEES

A. The following persons will be expected to attend all partnering sessions, at a minimum:

1. Contractor:

a. Project Sponsor (Principal-in-Charge)

b. Project Manager

DocuSign Envelope ID: D92FB7CA-DD9A-40FF-B59F-20FB66385E4F

c. Project Superintendent.

2. Owner:

a. Public Works Director

b. Utilities Manager

c. Resident Project Representative

3. Engineer

a. Principal-in-Charge

b. Project Manager

c. Deputy Project Manager

1.04 FACILITATORS

A. Facilitation will be performed by Owner to help establish and monitor the partnering relationship.

PART 2 - PRODUCTS (NOT USED)

PART 3 - EXECUTION (NOT USED)

END OF SECTION

DocuSign Envelope ID: D92FB7CA-DD9A-40FF-B59F-20FB66385E4F

SECTION 01 31 19

PROJECT MEETINGS

PART 1 - GENERAL

1.01 SECTION INCLUDES

A. Requirements for calling for and conducting meetings for the Work.

1.02 REFERENCED SECTIONS

A. The following Section is referenced in this Section

1. Section 01 32 16 – Construction Schedule

1.03 GENERAL

A. Project meetings and conferences are an important administration and communication requirement of all project participants. Meetings will be conducted throughout the course of the construction to address issues related to the Work, review and coordinate progress of the Work, and to discuss other matters of common interest to project participants.

B. Meeting and conference locations and qualified participants will be determined by the Owner and the Contractor based on the meeting agenda topics.

1.04 PRECONSTRUCTION CONFERENCE

A. Prior to the start of construction, the Owner will schedule a meeting of the Contractor, Owner, and their respective representatives. The general purpose of the meeting will be to establish working relationships, begin coordination of construction matters, discuss the Work, and to review the pertinent features of the Contract. The duration of the preconstruction conference will take approximately 4 hours.

B. The agenda for the meeting will cover at least the following items, a more detailed agenda will be distributed at the meeting:

1. Organization of the Contractor's forces and personnel, including subcontractors and materials suppliers.
2. Lines of authority and channels and procedures for communication.
3. Contractor’s construction schedule, including sequence of critical work.
4. Processing of shop drawings and other data that will be submitted to Owner for review.
5. Processing of change order requests and monthly applications for payment.
6. Procedures for quality control, housekeeping and related matters.

C. Contractor should be prepared to discuss the following topics:

1. Preliminary construction schedule and critical path.
2. Schedule of submittals and submittals needing short turn-around times.
3. Schedule of Values for construction payments.
4. Critical work sequencing.

DocuSign Envelope ID: D92FB7CA-DD9A-40FF-B59F-20FB66385E4F

5. Plans for mobilization, arrangement and use of staging and storage areas, use of site, location and arrangement of field offices, and site security.

D. Minutes of Meeting

1. The Owner will compile minutes of the meeting and distribute copies to all participants.

1.05 PROGRESS MEETINGS

A. Unless otherwise arranged, there will be a weekly progress meeting at a time and at an on-site location that is mutually agreed upon between the Contractor, Engineer and Owner.

1. Meetings are to enable orderly project review during the progress of work.

2. Engineer, Owner, Contractor's Superintendent, representatives of subcontractors, suppliers' representatives as may be needed, other Contractors working at the site, and other parties shall attend these meetings.

3. Owner will preside over the meeting and will compile and distribute minutes of the meeting.

B. The purpose of the weekly meetings is to coordinate the efforts of all concerned to result in smooth and coordinated progress towards completion of the overall project.

C. Contractor shall bring the updated 3-week "look ahead" schedule to each weekly meeting.

D. The Contractor will be required to address the following items at the weekly meeting:

1. Work completed last week.

2. Work anticipated next week.

3. Log of submittals and Requests for Information.

4. Contract document deficiencies or questions noted during prior week.

5. Schedule status and corrective measures and procedures that are planned to place the project back on schedule, if such action is necessary.

6. Report of any accidents, and any site safety issues that need to be addressed.

E. Other agenda items to be discussed include:

1. Review and revise as necessary and approve minutes of previous meetings.

2. Status of Requests for Information, Change Order Requests, submittals and shop drawings.

3. Identify problems that impede planned progress.

4. Other current business pertaining to the Work.

F. Revision of Minutes

1. Unless published minutes are challenged in writing prior to the next regularly scheduled progress meeting, they will be accepted as properly stating the activities and decisions of the meeting.

DocuSign Envelope ID: D92FB7CA-DD9A-40FF-B59F-20FB66385E4F

2. Persons challenging published minutes shall reproduce and distribute copies of the challenge to all indicated recipients of the particular set of minutes.

3. Challenge to minutes shall be settled as priority item of "old business" at the next regularly scheduled meeting.

1.06 PROGRESS SCHEDULE AND PROGRESS BILLING MEETINGS

A. Once each month, a progress schedule and progress payment meeting will be conducted with the Owner. The purpose of this meeting is to review the Progress Payment Estimate and reach agreement on the extent of the Work completed during the pay period.

B. The meeting date will be scheduled in accordance with the Owner's deadline for submittal of Progress Pay Estimate.

C. The updated progress schedule will also be reviewed at this meeting as described in Section 01 32 16. Schedule impacts, time extension requests, actual and anticipated schedule activity sequence/duration changes, delays, and other schedule-related topics will be discussed.

D. The Owner may require more frequent progress schedule meetings should there be schedule revisions that necessitate such a meeting.

1.07 SUBMITTAL MEETINGS

A. When required in the individual technical specification, or if requested by the Contractor or the Owner, a meeting regarding a required submittal will be held to facilitate the timeliness of the submittal preparation and review process.

1.08 QUALITY ASSURANCE MEETINGS

A. The Contractor or the Owner may request a meeting prior to the start of a particular phase of the project to discuss how the Work shall be accomplished in accordance with the quality requirements of the Contract Documents, Codes, permits and industry standards. Quality assurance inspections and tests that are applicable to the Work will be discussed.

1.09 PRE-INSTALLATION MEETINGS

A. When required in the individual specification, or if requested by the Contractor or Owner, a pre-installation meeting will be held to review conditions of the installation, installation procedures, and coordination with related work. This meeting will be scheduled to take place in advance of installation of the equipment or as required in the technical specifications.

1.10 PRE-SUBSTANTIAL COMPLETION MEETING

A. Thirty (30) days prior to the estimated substantial completion, the Owner, Engineer, Contractor, and appropriate subcontractors will meet to review maintenance manuals, guarantees, closeout submittals, bonds, and service contracts for materials and equipment.

1.11 SPECIAL MEETINGS

A. Any time during progress of the Work, the Owner shall have the authority to require the Contractor and any subcontractor, suppliers, or service providers to attend job-site conferences on matters which require immediate or special attention. Any notice of such

DocuSign Envelope ID: D92FB7CA-DD9A-40FF-B59F-20FB66385E4F

conference shall be duly observed and complied with by the Contractor and subcontractors, suppliers, or service providers without extra cost to Owner.

1.12 POST CONSTRUCTION GUARANTY PERIOD MEETING

A. Contractor shall meet with a representative of the Owner and the Engineer approximately eleven (11) months after the date of Substantial Completion to inspect the Work. Meeting will be arranged by the Owner at least seven (7) days before meeting. The Contractor will require attendance of its Project Manager/Superintendent, appropriate manufacturers, and appropriate subcontractors.

PART 2 - PRODUCTS (NOT USED)

PART 3 - EXECUTION (NOT USED)

END OF SECTION

DocuSign Envelope ID: D92FB7CA-DD9A-40FF-B59F-20FB66385E4F

SECTION 01 31 26

ELECTRONIC CONSTRUCTION DOCUMENT CONTROL SYSTEM

PART 1 - GENERAL

1.01 DESCRIPTION

A. The Contractor shall utilize an Electronic Construction Document Control System (ECDCS) provided by the Owner. ECDCS will be a web-based electronic media site and will be made available to the contractors' project personnel, Owner and Engineer. The joint use of this system is to facilitate electronic exchange of information, automation of key processes, and overall management of the contract. The ECDCS shall be the primary means of project information submission and management. When required by the Owner, paper documents will also be provided. In the event of discrepancy between the electronic version and paper documents, the paper documents will govern.

1.02 USER ACCESS LIMITATIONS

A. The Owner will control the Contractor's access to ECDCS by allowing access and assigning user profiles to accepted Contractor personnel. User profiles will define levels of access into the system; determine assigned function-based authorizations (determines what can be seen) and user privileges (determines what they can do). Sub-contractors and suppliers may be given access to the system through the Contractor. Entry of information exchanged and transferred between the Contractor and its sub-contractors and suppliers on the system shall be the responsibility of the Contractor.

B. Joint Ownership of Data - Data entered in a collaborative mode (entered with the intent to share as determined by permissions and workflows within the ECDCS system) by the Owner and the Contractor will be jointly owned.

C. Data access after project completion - All Project participants can request a copy of their project information from the system upon completion of the project. Participants are responsible for the $500 cost for the archive. To request an archive complete a support request in the ECDCS application. The support request should include the address for shipping the archive too.

1.03 AUTOMATED SYSTEM NOTIFICATION AND TRACKING

A. Review comments made (or lack thereof) by the Owner on Contractor submitted documentation shall not relieve the Contractor from compliance with requirements of the Contract Documents.

B. The Contractor is responsible for managing, tracking, and documenting the Work to comply with the requirements of the Contract Documents.

C. Owners acceptance via automated system notifications extends only to the face value of the submitted documentation and does not constitute validation of the Contractor's submitted information.

DocuSign Envelope ID: D92FB7CA-DD9A-40FF-B59F-20FB66385E4F

1.04 SUBMITTALS

A. See Section 01 33 00, Submittals

1. List of Contractor's key personnel. Include descriptions of key personnel's roles and responsibilities for this project. Contractor should also identify their organizations' administrator on the list.

1.05 COMPUTER REQUIREMENTS

A. The Contractor shall use computer hardware and software that meets the requirements of the ECDCS system as recommended by ECDCS vendor to access and utilize ECDCS. As recommendations are modified by ECDCS, the Contractor will upgrade their system(s) to meet the recommendations or better. Upgrading of the Contractor's computer systems will not be justification for a cost or time modification to the Contract.

B. The contractor shall ensure that connectivity to the ECDCS system (whether at the home office or job site) is accomplished through DSL, cable, T-1 or wireless communications systems.

1.06 CONTRACTOR RESPONSIBILITY

A. The Contractor shall be responsible for the validity of their information placed in ECDCS and for the abilities of their personnel. Accepted users shall be knowledgeable in the use of computers, including Internet Browsers, email programs, cad drawing applications, and Adobe Portable Document Format (PDF) document distribution program. The Contractor shall utilize the existing forms in ECDCS to the maximum extent possible. If a form does not exist in ECDCS the Contractor must include a form of their own or provided by the Owner representative as an attachment to a submittal. Adobe PDF documents will be created through electronic conversion rather than optically scanned whenever possible. The Contractor is responsible for the training of their personnel in the use of ECDCS (outside what is provided by the owner) and the other programs indicated above as needed.

1. User Access Administration - Provide a list of Contractor's key ECDCS personnel for the Owner's acceptance. Contractor is responsible for adding and removing users from the system. The Owners Representative reserves the right to perform a security check on all potential users. The Contractor will be allowed to add additional personnel and subcontractors to ECDCS.

1.07 TRAINING

A. The Owner has arranged for the following training to be provided to the Contractor.

1. Flex Training class (2 hr per session, on line) 2 sessions.

PART 2 - PRODUCTS (OWNER-SUPPLIED)

2.01 DESCRIPTION

A. Vendor: Procore, Bentley Systems, or equivalent.

DocuSign Envelope ID: D92FB7CA-DD9A-40FF-B59F-20FB66385E4F

PART 3 - EXECUTION

3.01 EXECUTION

A. Design Document Submittals - All design drawings and specifications shall be submitted as cad .dwg files or PDF attachments to the ECDCS submittal work flow process and form.

B. Shop Drawings - Shop drawing and design data documents shall be submitted as cad .dwg files or PDF attachments to the ECDCS submittal work flow process and form. Examples of shop drawings include, but are not limited to:

1. Standard manufacturer installation drawings.
2. Drawings prepared to illustrate portions of the work designed or developed by the Contractor.
3. Steel fabrication, piece, and erection drawings.

C. Product Data - Product catalog data and manufacturers' instructions shall be submitted as PDF attachments to the ECDCS submittal work flow process and form. Examples of product data include, but are not limited to:

1. Manufacturer's printed literature.
2. Preprinted product specification data and installation instructions.

D. Samples - Sample submittals shall be physically submitted as specified in Section 01 33 00. Contractor shall enter submittal data information into ECDCS with a copy of the submittal form(s) attached to the sample. Examples of samples include, but are not limited to:

1. Product finishes and color selection samples.
2. Product finishes and color verification samples.
3. Finish/color boards.
4. Physical samples of materials.

E. Administrative Submittals. All correspondence and pre-construction submittals shall be submitted using ECDCS. Examples of administrative submittals include, but are not limited to:

1. Digging permits and notices for excavation.
2. List of product substitutions
3. List of contact personnel.
4. Notices for roadway interruption, work outside regular hours, and utility cut overs.
5. Requests for Information (RFI).
6. Each schedule submittal specified in Section 01 32 16
7. Construction Progress Schedule shall be submitted as a native backed-up file (.PRX or .STX) of the scheduling program being used.
8. The schedule will also be posted as a PDF file.
9. Plans for safety, demolition, environmental protection, and similar activities.

DocuSign Envelope ID: D92FB7CA-DD9A-40FF-B59F-20FB66385E4F

10. Quality Control Plan(s), Testing Plan and Log, Quality Control Reports, Production Reports, Quality Control Specialist Reports, Preparatory Phase Checklist, Initial Phase Checklist, Field Test reports, Summary reports, Rework Items List, etc.

11. Meeting minutes for quality control meetings, progress meetings, pre-installation meetings, etc.

12. Any general correspondence submitted.

F. Compliance Submittals Test reports, certificates, and manufacture field report submittals shall be submitted on ECDCS as PDF attachments. Examples of compliance submittals include, but are not limited to:

1. Field test reports.

2. Quality Control certifications.

3. Manufacturers documentation and certifications for quality of products and materials provided.

G. Record and Closeout Submittals - Operation and maintenance data and closeout submittals shall be submitted on ECDCS as PDF documents during the approval and review stage as specified, with actual set of documents submitted for final. Examples of record submittals include, but are not limited to:

1. Operation and Maintenance Manuals: Final documents shall be submitted as specified.

2. As-built Drawings: Final documents shall be submitted as specified.

3. Extra Materials, Spare Stock, etc.: Submittal forms shall indicate when actual materials are submitted.

H. Financial Submittals - Schedule of Value, Pay Estimates and Change Request Proposals shall be submitted on ECDCS. Supporting material for Pay Estimates, Change Requests, and allowance order proposals shall be submitted on ECDCS as PDF attachments. Examples of compliance submittals include, but are not limited to:

1. Contractors Schedule of Values

2. Contractors Monthly Progress Payment Requests

3. Contract Change proposals requested by the project owner.

4. Preliminary allowance order proposals requested by the project owner.

END OF SECTION

DocuSign Envelope ID: D92FB7CA-DD9A-40FF-B59F-20FB66385E4F

SECTION 01 32 16

CPM CONSTRUCTION SCHEDULE

PART 1 - GENERAL

1.01 GENERAL

A. See General Conditions Article 2.03: Submit to the Engineer a Temporary Construction Schedule and a CPM Schedule (along with updates) as described below:

B. Temporary Construction Schedule:

1. Submit to the Engineer, within ten (10) days after date of the Notice to Proceed, a Temporary Construction Schedule covering the Contractor's activities over the first sixty (60) days of the Contract Time. The Temporary Construction Schedule shall schedule the progress within the calendar days set forth above for completion of the work.

C. CPM Schedule:

1. Acceptable Critical Path Method (CPM) scheduling software includes SureTrak or Primavera. Provide a copy of the selected software to the Engineer. In accordance with General Conditions Article 2.03, submit an acceptable CPM Schedule to the Engineer within thirty (30) days after beginning Construction. Subsequent revisions to said schedule shall be submitted as set forth hereinafter. The requirement for the CPM schedule is included to assure adequate planning and execution of the work and to assist the Engineer in appraising the reasonableness of the proposed schedule and evaluating progress of the work. The CPM schedule submitted under this Specification shall utilize a critical path method (CPM) format, either the precedence or arrow diagramming method. Only one progress payment will be made prior to submission and acceptance of the CPM Schedule.

2. The CPM schedule system shall be submitted on paper and submitted electronically through the construction document control system and consist of diagrams and accompanying mathematical analyses. The diagrams shall show elements of the project in detail and an entire project summary. Diagrams shall show the order and interdependence of activities and sequence in which the work is to be accomplished as planned by the Contractor. The basic concept of a network analysis diagram shall be followed to show how the start of a given activity is dependent on the completion of preceding activities and its completion restricts the start of following activities. Detailed network activities shall include, in addition to construction activities, the submittal and approval of samples of material and Shop Drawings, the procurement of critical materials and equipment, fabrication of special material and equipment and their installation and testing. All activities of the Owner and the Engineer that affect progress and required contract dates for completion of all or parts of the work shall be shown. The selection and number of activities shall be subject to favorable review by the Engineer. Summary networks shall be time scaled. Durations shall be in working days and shall not exceed five workdays, except for submittal and delivery items. Where the duration of continuous work exceeds five workdays, work items in the

DocuSign Envelope ID: D92FB7CA-DD9A-40FF-B59F-20FB66385E4F

Construction Schedule shall be subdivided by location, approximate stationing or other sub-element of the work.

3. The graphic network diagram shall include for each activity, the description, activity number, the estimated duration in work days, and all activity relationship lines. The network diagram shall be drawn for the early start of all activities. If the precedence technique is utilized, the schedule report shall include a calendar in work days, a network report sorted by early start and a logic table report sorted by preceding work item. If the arrow technique is utilized, the schedule report shall include a calendar in work days, a network report sorted by early start, a network report sorted by I-J numbers, and a network sorted by slack time and I-J numbers.

4. The critical path shall be shown on all reports and on the graphic network diagram. The activities which constitute the critical path shall be identified.

5. The mathematical analysis of the network diagram shall include a tabulation of each activity. The following information shall be furnished as a minimum for each activity:

    a. preceding and following event numbers
    b. activity description and number
    c. estimated duration of activities
    d. earliest start date (by calendar date)
    e. earliest finish date (by calendar date)
    f. actual start date (by calendar date)
    g. actual finish date (by calendar date)
    h. latest start date (by calendar date)
    i. latest finish date (by calendar date)
    j. slack or float
    k. percentage of activity completed

6. The program shall be capable of accepting revised completion dates as modified by approved time adjustments and recomputation of all tabulation dates and float accordingly.

7. Submission and review of the system shall be as follows:

    a. Submit the complete network analysis system, consisting of the detailed network mathematical analysis and network diagrams, within thirty (30) calendar days after receipt of Notice to Proceed.

    b. Participate in a review and evaluation of the proposed network diagrams and analysis by the Engineer. Any revisions necessary as a result of this review shall be resubmitted for review by the Engineer within ten (10) calendar days. When completed, the favorably reviewed schedule shall then be the schedule to be used by the Contractor for planning, organizing and directing the work and for reporting progress. If the Contractor thereafter desires to make significant changes in his method

DocuSign Envelope ID: D92FB7CA-DD9A-40FF-B59F-20FB66385E4F

of operating and scheduling, he shall notify the Engineer in writing stating the reasons for the change.

c. Submit on paper and on floppy disc or CD-ROM at monthly report shall cover a period of approximately thirty (30) days ending around the 20th of each month. The monthly reports shall be submitted within ten (10) calendar days of the end of the reporting period.

1) If the project is proceeding on schedule, the monthly update report may consist of a marked-up copy of the graphical network diagram. This submittal shall clearly indicate the status of any minor shifts in sequence or schedule and the estimated completion date or percent complete of all activities currently in progress. The contract completion date shall also be indicated. Submit a narrative report relating to status of construction, the schedule, and factors which may affect the remainder of the schedule. The report shall show the activities or portions of activities completed during the reporting period. The report shall state the percentage of the work actually completed and scheduled as of the report date and the progress along the critical path in terms of days ahead or behind the allowable dates.

2) If, in the opinion of the Engineer, the project is behind schedule, the monthly report shall include a revised network diagram and/or mathematical analysis showing the Contractor's proposed revised schedule. An analysis of the effect that the delay has on progress along other paths shall also be included in the report. Also submit a narrative report with each updated analysis which shall include but not be limited to a description of current and anticipated problem areas, delaying factors and their impact, and an explanation of corrective actions taken or proposed.

3) Periodic reports shall be submitted in sufficient copies to cover Contractor needs plus three (3) copies to be retained by the Engineer.

8. Any omission of work from the detailed schedule, otherwise required for Contract compliance, will not excuse the Contractor from completing such work within any applicable completion date. The CPM schedule shall be generated by computer methods. If the submitted Construction Progress Schedule does not fully reflect the specified work, the CPM format requirements or time limitation for completion of the work as provided in these Specification, it shall be returned to the Contractor by the Engineer for modification as necessary.

D. Schedule Review: Once each month on a date mutually agreed upon, but no later than seven (7) working days after the monthly schedule progress report date, a jobsite meeting will be held to review the Construction Schedule and job progress. Also attend weekly meetings scheduled by the Engineer to review the progress of the work in the preceding week and in the subsequent work, coordinate the work with public agencies or other contractors as required, and allow the Engineer to plan his activities for testing, inspection, etc.

DocuSign Envelope ID: D92FB7CA-DD9A-40FF-B59F-20FB66385E4F

E. Schedule Revisions: The conditions under which the Engineer will require revisions of the Construction Schedule include the following:

1. When delay in completion of any work item or sequence of work items results in an estimated extension of project completion by either twenty (20) working days or by five percent (5%) of the remaining duration of time to complete the Contract, whichever is less.

2. When delays in submittals or deliveries make replanning or rescheduling of the work necessary.

3. When the schedule does not represent actual prosecution and progress of the work.

4. When any change to the sequence of activities, the completion date for major portions of the work, or when changes occur which affect the critical path.

5. When Contract modification necessitates schedule revision, the Contractor shall submit a schedule analysis of all change order work with his proposal.

F. Proposed Change Orders: Proposed change orders submitted by the Contractor shall be accompanied by a statement of the time necessary for the work, together with a description of how this time will be incorporated into the current Construction Schedule. The Contractor shall not be entitled to a time extension for delays in activities on non-critical paths of the favorably reviewed schedule unless the duration of the excusable delay exceeds the total float of the activities being delayed. If the duration of an excusable delay does exceed the total float of the activities affected by the delay, the Contractor shall be entitled to an extension equal to the difference. Except as defined in the Contract Documents, the definitions of "non-critical activities" and "total float" shall be as provided in the Associated General Contractors of America book "CPM In Construction, A Manual For General Contractors."

G. Accelerated Work if Required to Meet Schedule: If the Contractor's performance falls behind schedule, the Contractor shall accelerate the work as required to get back on schedule at no additional cost to the Owner. Accelerated work shall include air or express delivery of materials and equipment, increasing the number of workers, working overtime, working Saturdays, Sundays, and holidays, and working additional shifts.

H. When, in the judgment of the Engineer, it is necessary to accelerate any part of the work ahead of schedule, the Contractor shall, when directed, concentrate his efforts on such part of the work, but maintain sufficient progress on all other areas of the Project required to maintain the schedule which meets the Contract Completion Date.

I. The Engineer shall be advised in advance by the Contractor when construction work will take place. If the Contractor fails to notify the Engineer in advance of the day or days when no construction work will be done, the Contractor will be charged the cost of inspection for that day or days and such changes may be deducted from any payment due the Contractor.

END OF SECTION

DocuSign Envelope ID: D92FB7CA-DD9A-40FF-B59F-20FB66385E4F

SECTION 01 33 00

SUBMITTALS

PART 1 - GENERAL

1.01 SUMMARY

A. Requirements for the submittal of information that will enable determination of whether the Contractor's proposed materials, equipment or methods of work are in general conformance to the design concept and in compliance with the Contract Documents.

B. Furnish drawings, specifications, descriptive data, certificates, samples, test results, methods, schedules, manufacturer's installation instructions and other information as indicated.

1.02 REFERENCED SECTIONS

A. The following Sections are referenced in this Section

1. Section 01 99 00 – Reference Forms

1.03 CONTRACTOR'S RESPONSIBILITIES

A. Contractor shall be responsible for the accuracy and completeness of the information contained in each submittal and shall assure that the materials and equipment incorporated into the Work, or the methods of performing the Work shall be as described in the accepted submittals.

B. Verify that all features of all products conform to the specified requirements. Submittal documents shall be clearly edited to indicate only those items, models, or series of equipment that are being submitted for review. Extraneous materials shall be crossed out or otherwise obliterated.

C. Coordinate submittals among subcontractors and suppliers. Ensure that there is no conflict with other submittals and notify the Engineer in each case where this submittal may affect the work of another contractor or the Owner, including those submittals complying with unit responsibility requirements specified in applicable technical sections.

D. Coordinate submittals with the Work so that work will not be delayed. Coordinate and schedule different categories of submittals, so that one will not be delayed for lack of coordination with another. No extension of time will be allowed because of failure to properly schedule submittals.

E. Do not proceed with work related to a submittal until the submittal process is complete and the submittal has received a response "No Exceptions Taken" or "Make Corrections Noted."

F. Certify on each submittal document that the Contractor has reviewed the submittal, verified field conditions, and complied with the contract documents.

1. Include a copy of the specification section with addendum updates, all referenced and applicable sections, and each paragraph check-marked to indicate specification compliance or marked to indicate requested deviations from specification requirements.

DocuSign Envelope ID: D92FB7CA-DD9A-40FF-B59F-20FB66385E4F

a. Use check marks (✓) to denote full compliance with a paragraph as a whole.

b. If deviations from the specifications are indicated and therefore requested by the Contractor, underline each deviation, and denote by a number in the margin to the right of the identified paragraph.

c. The remaining portions of the paragraph not underlined will signify compliance on the part of the Contractor with the specifications.

d. Include a detailed, written justification for each deviation.

2. Failure to comply with this paragraph is sufficient cause to reject the entire submittal.

1.04 REVIEW COSTS

A. The Owner's cost for review of submittals for the same proposed materials, equipment or work will be apportioned as follows:

1. The cost of review of the initial submittal and the first revised submittal will be borne by the Owner.

2. The cost to review all additional revised submittals after the first revised submittal will be charged to the Contractor. The cost of review shall include, without limitation, administrative, design and engineering activities directly related to review of submittals.

1.05 SUBMITTAL INDEX

A. Within 30 days of the Notice to proceed, submit a list, by specification section, of all submittals to be submitted.

B. Update and resubmit the submittal index on a monthly basis where additional submittals are identified, or as necessary

1.06 CATEGORIES OF SUBMITTALS

A. General

1. Submittals fall into two general categories;

a. Submittals for review and comment require action by the Engineer.

b. Submittals that are primarily for information only do not require Engineer's approval.

B. Submittals for Review and Comment

1. Transmit submittals for review and comment to the Engineer. The Engineer will review the submittal for compliance with the Contract requirements and will provide written comments regarding acceptability.

C. Submittals for Information Only

1. Where specified, furnish submittals to the Engineer for information only. The Engineer may, at the Engineer's option, review, and comment on any product data.

DocuSign Envelope ID: D92FB7CA-DD9A-40FF-B59F-20FB66385E4F

2. Incomplete or inadequate product data will be returned to the Contractor for resubmittal.

1.07 TRANSMITTAL PROCEDURES

A. General

1. Transmit submittals regarding material and equipment under cover of a Shop Drawing/Transmittal Form See Section 01 99 00.

2. Use a separate form for each specific item, class of material, equipment, and items specified in separate, discrete sections, for which the submittal is required.

3. Identify submittal documents common to more than one piece of equipment with all the appropriate equipment numbers.

4. Make submittals for various items with a single form when the items taken together constitute a manufacturer's package or are so functionally related that expediency indicates checking or review of the group or package as a whole.

5. Assign a unique sequential number on the transmittal form accompanying each item submitted.

a. Use the following format for original submittal numbers: "XXX"; where "XXX" is the sequential number assigned by the Contractor.

b. Use the following format for resubmittals: "XXX-Y"; where "XXX" is the originally assigned submittal number and "Y" is a sequential letter assigned for resubmittals, i.e., A, B, or C being the 1st, 2nd, and 3rd resubmittals, respectively. Submittal 25B, for example, is the second resubmittal of submittal 25.

B. Electronic Submittals

1. Electronic submittals are preferred except as otherwise indicated.

2. Prepare electronic submittals and Shop Drawings in electronic (*.pdf) format including half-sized and full-sized drawings, catalog information and other required submittal information.

3. Break down submittals that are larger than 10 megabytes into smaller sections, using logical division points to create sections.

4. Electronically bookmark electronic submittals greater than 30 pages in length by major submittal section to facilitate ease of navigation.

C. Paper copy submittals are not an acceptable alternative to electronic submittals except for samples.

D. Deviation from Contract

1. If the Contractor proposes to provide material, equipment, or method of work that deviates from the project manual, so indicate under "Proposed Deviations" on the transmittal form accompanying the submittal copies.

DocuSign Envelope ID: D92FB7CA-DD9A-40FF-B59F-20FB66385E4F

E. Submittal Completeness

1. Submittals that do not have all the information required to be submitted, including deviations, are not acceptable and will be returned without review.

1.08 SUBMITTAL CONTENT

A. Prepare submittals in compliance with individual Specification Sections and as indicated herein.

B. Shop Drawings:

1. Develop project-specific, scaled drawings to fully identify materials and products that will be provided and their relationship to other products that will be furnished and installed.

2. Do not utilize reproductions of the Contract Documents as the basis for the submittal.

3. Identify products, assemblies, equipment, and systems.

4. Provide equipment identification numbers or tag numbers, wiring diagrams, and setting diagrams.

5. Identify critical dimensions.

C. Product Data:

1. Provide information necessary to demonstrate conformance with the specified requirements. Include performance curves, specifications, and wiring diagrams.

2. Product data may consist of manufacturer's standard catalog information and data sheets, marked to indicate the specific products that will be provided.

3. Provide supplemental information as necessary to fully demonstrate how products will be modified from the manufacture's standard products to meet the specification requirements.

D. Manufacturer's Instructions: Written or published information that establishes the manufacturer's recommendations, guidelines and procedures for handling and installation of products, equipment, and assemblies.

E. Samples: Mount, display or package samples in a manner that will facilitate review and establish workmanship and quality of materials.

1.09 SUBMITTAL REQUIREMENTS

A. When the Contract Documents require a submittal, submit the specified information as follows:

1. Submittals for Review and Comment:

a. Electronic Submittal: Submit one electronic (*.pdf) submittal.

2. Submittals for Information Only:

a. Electronic Submittal: Submit one electronic (*.pdf) submittal.

DocuSign Envelope ID: D92FB7CA-DD9A-40FF-B59F-20FB66385E4F

1.10 REVIEW PROCEDURE

A. General

1. The Engineer will review submittals within the processing time identified in paragraph “Processing Time” and return:

a. Electronic Submittal – a signed submittal response document, in (*.pdf) format.

b. Paper Copy Submittal – Two marked up copies of the submitted copies. The reproducible original will be retained by the Engineer.

B. Submittals for Review and Comment

1. The returned submittal will indicate one of the following actions:

a. "NO EXCEPTIONS TAKEN" – The material, equipment or work method complies with the project manual.

b. "MAKE CORRECTIONS NOTED" – Limited corrections are required.

1) Provide a corrected copy where:

a) The information is to be included in the O&M data.

b) If requested by the Engineer.

c. "AMEND AND RESUBMIT" – The submittal is insufficient or contains incorrect data.

d. "REJECTED – SEE REMARKS" – The material, equipment, or work method does not comply with the project manual. Submittals with deviations that have not been identified clearly may be rejected.

2. For submittals marked "NO EXCEPTIONS TAKEN" or "MAKE CORRECTIONS NOTED.

a. The Contractor may begin implementing the work method or incorporating the material and equipment covered by the submittal in accordance with any noted corrections.

3. For submittals marked "AMEND AND RESUBMIT" or "REJECTED – SEE REMARKS"

a. Contractor shall provide a typed letter responding to each of the Engineer’s review comments with each resubmittal.

b. Except at its own risk, the Contractor shall not undertake the work covered by such submittals until a new submittal is submitted and returned marked either "NO EXCEPTIONS TAKEN" or "MAKE CORRECTIONS NOTED."

C. Submittals for Information Only

1. The returned submittal will indicate ACCEPTED FOR RECORD” if the submittal is complete and adequate.

2. Engineer may return comments on information submittals to identify concerns with what was submitted, in such case, Contractor shall address concerns in writing and return a revised submittal.

DocuSign Envelope ID: D92FB7CA-DD9A-40FF-B59F-20FB66385E4F

1.11 PROCESSING TIME

A. Prepare submittals and transmit to Engineer for review in sufficient time to allow Engineer's review; manufacture, fabrication or assembly of materials and systems; and shipping of material to the site in time for installation in accordance with the Contractor's schedule.

B. Engineer's time for review will begin upon receipt of a complete and comprehensive submittal containing all required information.

C. Engineer will review submitted information and transmit a response to Contractor within 21 days after receipt, subject to the following:

1. In some instances, review times for specific submittals may be modified by the individual specification Section.

2. Resubmittals will be subject to the same review time.

D. No adjustment of Contract Time or Contract Price will be allowed due to delays in the progress of the Work that are caused by rejected submittals and subsequent resubmittals.

1.12 EFFECT OF REVIEW OF CONTRACTOR'S SUBMITTALS

A. The purpose of submittals is to demonstrate how Contractor intends to conform to the Contract Documents and design concepts. Engineer is entitled to rely upon the accuracy and completeness of designs, calculations, or certifications made by licensed professionals whether or not a stamp or seal is required by the Contract Documents.

B. The review procedure is based on the Contractor's guarantee that all features and characteristics not requiring submittals conform to the contract documents.

C. Review of contract drawings, methods of work, or information regarding materials or equipment the Contractor proposes to provide, does not relieve the Contractor of its responsibility for

1. Fulfilling the requirements of the Contract,

2. Proper operation of the equipment,

3. Correction of defective work

D. Reviews shall not be regarded as an assumption of risk or liability by the Engineer or the Owner.

E. A mark of "NO EXCEPTIONS TAKEN" or "MAKE CORRECTIONS NOTED" means that the Owner has no objection to the Contractor, upon its own responsibility, using the plan or method of work proposed, or providing the materials or equipment proposed.

F. The Engineer's review of shop drawings, samples, or test procedures will be only for conformance with design concepts and for compliance with information given in Contract Documents. The Engineer's review does not extend to:

1. Accuracy of dimensions, quantities, or performance of equipment and systems designed by Contractor.

2. Contractor's means, methods, techniques, sequences, or procedures except when specified, indicated on the Drawings, or required by Contract Documents.

DocuSign Envelope ID: D92FB7CA-DD9A-40FF-B59F-20FB66385E4F

3. Safety precautions or programs related to safety which shall remain the sole responsibility of the Contractor.

G. Review of a separate item does not indicate approval of the assembly in which the item functions.

1.13 SUBSTITUTIONS OR "OR EQUAL" ITEMS

A. Named or Sole Source Times

1. Whenever materials or equipment are specified or described in the Contract Documents by using the name of a proprietary item or the name of a particular Supplier, the naming of the item is intended to establish the type, function, and quality required.

2. Unless the name designated a "sole source" and/or is followed by words indicating that no substitution is permitted, materials, or equipment of other Suppliers may be accepted by Engineer. Follow the procedures in the General Conditions.

B. Modification due to Substitutions

1. All costs for redesign required by the implementation of the proposed substitute shall be borne by the Contractor.

2. All costs associated with incorporating a substitution into the project shall be borne by the Contractor.

PART 2 - NOT USED

PART 3 - NOT USED

END OF SECTION

DocuSign Envelope ID: D92FB7CA-DD9A-40FF-B59F-20FB66385E4F

(THIS PAGE LEFT BLANK INTENTIONALLY)

DocuSign Envelope ID: D92FB7CA-DD9A-40FF-B59F-20FB66385E4F

SECTION 01 34 00

REQUESTS FOR INFORMATION AND CLARIFICATIONS

PART 1 - GENERAL

1.01 SECTION INCLUDES

A. Procedures for submitting requests for information and clarifications when Contractor discovers apparent conflicts, omissions, or errors in the Contract Documents, or upon having any questions concerning interpretation of the Contract Documents.

1.02 REFERENCED SECTIONS

A. The following Sect ion is referenced in this Section

1. Section 01 99 00 – Reference Forms

1.03 PROCEDURES

A. Notification:

1. Notify the Engineer in writing and request interpretation, clarification, or additional detailed instructions concerning the Work.

2. Ask for clarification or request information immediately upon discovery, but no less than seven working days prior to the start date of the activities related to the clarification, based on the latest updated version of the official contract schedule.

B. Form:

1. Submit requests for clarification and/or additional information in writing to the Engineer using the Request for Information (RFI) form provided in Section 01 99 00.

2. Provide a detailed statement indicating the nature of the information requested. Reference specific Drawings and Specifications as appropriate.

3. Limit each written request to one topic.

4. Electronic (*.pdf) format RFIs are preferred. Prepare RFIs and any attachments in electronic format. Transmit electronic RFIs via email to the Construction Manager. Break down RFIs that are larger than 4 megabytes into smaller sections, using logical division points to create sections.

C. Numbering:

1. Use consecutive numbers for each new form submitted. When RFI's are re-submitted to request additional information on the same topic, add a letter A, B, C, etc. to the numbering system for each subsequent RFI until the subject is resolved.

1.04 REASONS FOR SUBMITTAL

A. Submit an RFI if one of the following conditions occur:

1. An unforeseen condition or other circumstance that is not described in the Contract Documents.

DocuSign Envelope ID: D92FB7CA-DD9A-40FF-B59F-20FB66385E4F

2. An apparent conflict or discrepancy between portions of the Contract Documents.

3. An apparent omission from the Contract Documents.

4. Information presented in the Contract Documents is unclear or additional details are needed to undertake the Work.

1.05 RESPONSE TIME

A. The Engineer will resolve the RFI and issue instruction to the Contractor within 21 calendar days.

B. Response time may need to be lengthened; or shortened for emergency situations as mutually agreed upon by all parties.

C. Do not proceed with the affected work before receipt of a response from the Engineer. Should the Contractor elect to proceed with the Work affected by the RFI, any portion of the Work that is not done in accordance with the Engineer's interpretation, clarifications, instructions, or decisions will be subject to removal or replacement at the Contractor's expense.

1.06 REJECTIONS

A. RFI's submitted by the Contractor may be rejected by the Engineer for the following reasons:

1. The RFI is submitted as a substitute for a submittal.

2. Under the pretense of a Contract Documents discrepancy or omission without thoroughly reviewing the documents.

3. In a manner that suggests that specific portions of the Contract Documents are assumed to be excluded, or be taken as an isolated portion of the Contract Documents in part rather than whole.

4. In an untimely manner without proper coordination and scheduling of work or related trades.

1.07 ADDITIONAL DETAILED INSTRUCTIONS (CLARIFICATIONS)

A. The Owner may furnish additional detailed written instructions to further explain the Work and these instructions shall become part of the Contract Documents. Clarifications will be issued using the above RFI system.

B. When, in the opinion of the Contractor, the Engineer's response in the RFI constitutes additional work beyond the scope of the Contract, the Contractor shall notify the Engineer in writing following receipt of the RFI and prior to initiating the Work affected by the RFI. The process for submitting claims of additional Work shall be followed as defined in the General Conditions. Lack of compliance with this notification requirement will cause Contractor to forfeit any claim for additional compensation or extension of the schedule.

PART 2 - PRODUCTS (NOT USED)

PART 3 - EXECUTION (NOT USED)

END OF SECTION

DocuSign Envelope ID: D92FB7CA-DD9A-40FF-B59F-20FB66385E4F

SECTION 01 45 00

CONTRACTOR QUALITY CONTROL

PART 1 - GENERAL

1.01 SUMMARY

A. Comply with the quality control provisions as herein specified and described in the General Conditions and specified in the Construction Documents. Perform quality control tests and inspection and quality surveillance of all Work required by this Contract unless specifically designated to be performed by Owner.

B. Contractor Quality Control (CQC) shall consist of plans, procedures, and organization necessary to provide materials, equipment, workmanship, fabrication, construction, and operations that comply with the requirements of the Construction Documents. CQC shall cover construction operations and be keyed to the Progress Schedule including, but not limited to, fabrication both on-site and off-site and field and factory tested construction mock-ups.

C. Owner's inspection and testing agency services are specified in Section 01 45 23 and may be required to ensure the Work complies with the Construction Documents, except where the Construction Documents specify tests to be performed by the Contractor.

1.02 REFERENCED SECTIONS

A. The following Sections are referenced in this Section

1. Section 01 33 00 – Submittals
2. Section 01 45 23 – Testing and Inspections
3. Section 01 77 00 – Contract Closeout Procedures

1.03 CONTRACTOR QUALITY CONTROL (CQC) PLAN

A. CQC PLAN: Submit the CQC Plan within 10 days after award of contract. CQC plan shall identify personnel, procedures, instructions, records, and forms to be used. Failure to submit an acceptable CQC Plan within the time described may result in the Notice to Proceed being delayed. At a minimum, each CQC Plan shall include:

1. Identification of the CQC Representative
2. A description of the quality control organization, including chart showing lines of authority and acknowledgment that the Contractor’s QC staff shall report to the Project Manager or someone higher in the Contractor’s organization.
3. The name, qualifications, duties, responsibilities, and authorities of each person assigned a QC function.
4. Procedures for scheduling and managing submittals, including those of subcontractors, offsite fabricators, suppliers, and purchasing agents.
5. Reporting procedures including proposed reporting forms.
6. Testing, inspections, and approval records. Provide control testing procedures for each specific test.

DocuSign Envelope ID: D92FB7CA-DD9A-40FF-B59F-20FB66385E4F

B. Plan Acceptance:

1. Acceptance of the plan by the Owner is required prior to the start of construction. Acceptance is conditional and will be predicated on satisfactory performance during the construction.

C. Change Notification:

1. After acceptance of the CQC Plan, notify the Owner in writing of any proposed change. Proposed changes are subject to Owner acceptance.

1.04 CONTRACTOR QUALITY CONTROL REQUIREMENTS

A. Organization:

1. Identify a dedicated full time CQC Representative who shall be on the Project Site at all times during the Work, and as appropriate for all construction activities subsequent to the start of Owner's Final Inspection, with complete authority to take action necessary to ensure compliance with the Construction Documents. Staff the CQC organization, as required, to perform the activities outlined in this Section and elsewhere in the Construction Documents.

B. CQC Representative Qualifications:

1. The Contractor shall propose for Owner approval, in writing, the Project CQC Representative. The CQC Representative must have construction management experience and prior experience with projects of similar construction, size and complexity. The Owner will monitor and evaluate the performance of the CQC Representative based on: a) the conformance of the Work with the Construction Documents, and; b) an assessment of the accuracy, timeliness and completeness of the daily QC Report. If the CQC Representative fails to perform to the Owner's satisfaction, the Contractor shall replace him or her.

C. Submittals:

1. Identify persons responsible for review and approval of shop drawings, layout drawings, samples and mock-ups, and other submittals required by the Construction Documents. Owner's review action will indicate only that the general method of construction and detailing is satisfactory (see Section 01 33 00) and does not relieve the Contractor of the responsibility for proper installation, coordination of the Work, and compliance with the Construction Documents.

D. Daily Quality Control Reports:

1. CQC Representative shall maintain daily Quality Control (QC) Reports (that are not the Superintendent's Daily Report). QC Reports shall be factual records containing, at a minimum: Work performed by Contractor, Work performed by subcontractors, specific inspections and inspection results, type and location of tests performed and test results, verbal instruction received from Owner on deficiencies or re-testing required, examination of areas upon which new Work is to be placed to verify the substrate for the new Work, and observations and remarks. Submit QC Reports, on approved forms, the next workday following the day of the report.

DocuSign Envelope ID: D92FB7CA-DD9A-40FF-B59F-20FB66385E4F

2. CQC Representative shall verify and sign all reports. Verification shall contain the statement that all supplies. materials, products, and equipment incorporated in the Work are in compliance with the Construction Documents.

E. Control of On-Site and Off-Site Construction

1. Contractor's Quality Control system shall include the following phases of control and management for all activities including:

a. Preinstallation Meetings.

b. In-Progress Inspection Phase: In-progress inspections shall be performed continuously to verify that quality standards are maintained throughout the Project. Adjustment to control procedures and CQC Plans may be required based upon the results of these inspections and control testing. Report the results of the inspection in the daily QC Report. Discuss quality control procedures at construction progress meetings and revise CQC Plans for Owner's records, if changes are required.

c. Above Ceiling Inspections: The Contractor shall identify and provide reasonable time: a) for the Owner to conduct above-ceiling final inspections; b) for the Contractor to perform corrective work, and; c) for the Owner's consultants to validate the work complete prior to covering from sight. Provide a two (2) week notice for final inspections.

d. Off-Site Construction: Requirements for inspections of off-site construction activities are specified in individual equipment specifications. The CQC plan shall include specified inspections of off-site construction activities.

e. Final Punch List Report: The CQC Representative shall thoroughly inspect all aspects of the construction, including the Subcontractor's work, and produce a Final Punch List Report of incomplete work and/or work requiring correction. Issue the list to all Subcontractors and complete all items prior to requesting Final Inspection. The Contractor's request for Final Inspection shall certify that all features of the work are installed and reviewed by the Contractor to determine compliance with the Construction Documents and shall include the Final Punch List Report listing any incidental incomplete work. The Final Punch List Report shall be in a format acceptable to the Owner, with a comprehensive room number list and additional entry listings for site work, building enclosure, roofs, etc. to document the entire Project. Owner's Final Inspections items will be added to the Final Punch List Report by the Contractor. Manage the consolidated list of comments daily until all comments are signed-off by the Owner.

f. Final Inspection: In accordance with Section 01 77 00

g. Re-inspection: In accordance with Section 01 77 00.

h. Substantial Completion: In accordance with Section 01 77 00.

i. Final Completion: In accordance with Section 01 77 00.

END OF SECTION

DocuSign Envelope ID: D92FB7CA-DD9A-40FF-B59F-20FB66385E4F

(THIS PAGE LEFT BLANK INTENTIONALLY)

DocuSign Envelope ID: D92FB7CA-DD9A-40FF-B59F-20FB66385E4F

SECTION 01 45 23

TESTING AND INSPECTIONS

PART 1 - GENERAL

1.01 SECTION INCLUDES

A. Tests and inspections and allocation of responsibilities associated with tests and inspections.

B. Tests and inspections covered in this Section do not include Special Inspections required by the International Building Code. Refer to Section 01 45 26 for requirements pertaining to Special Inspections.

C. The detailed tests and inspections required to be performed by the Contractor are specified in the individual Sections of Divisions 2 through 46.

1.02 REFERENCED SECTIONS

A. The following Section is referenced in this Section

1. Section 01 45 26 – Special Tests and Structural Observations

1.03 OWNER'S TESTING AGENCY

A. Owner will employ and pay for testing conducted to confirm compliance with the requirements of the Contract. Testing may be on-site or off-site.

B. Owner's Testing Agency will perform tests, inspections, and sampling of the following work:

1. Earthwork, including collection and testing of representative material samples and compaction testing.

2. Concrete placement, reinforcement, ingredients and quality control.

3. Masonry placement, reinforcement, ingredients and quality control.

4. Structural steel.

5. Fire Proofing, density sampling and thickness inspection.

6. Painting and coating dry film thickness and holiday testing

C. The Owner's employment of the Testing Agency does not relieve the Contractor of his obligations to perform the work in accordance with Contract requirements nor to retain their own testing firm for quality control.

1.04 CONTRACTOR'S RESPONSIBILITIES

A. Initiate and coordinate tests and inspections required by Contract Documents and public authorities having jurisdiction of the work.

B. Notify the Owner's Testing Agency through the Owner's Representative a sufficient time in advance (but no less than 48 hours) of the manufacture of materials to be supplied

DocuSign Envelope ID: D92FB7CA-DD9A-40FF-B59F-20FB66385E4F

which, by requirements of the Contract Documents, must be tested at the source of supply so that the Laboratory may arrange for testing.

C. When changes of construction schedule are necessary during construction, coordinate all such changes with the Owner's Testing Agency as required.

D. When the Owner's Testing Agency is ready to test according to the established schedule, but is prevented from testing or taking specimens due to incompleteness of the work, all extra charges for testing attributable to the delay may be backcharged to the Contractor and shall not be borne by the Owner.

E. Provide access, facilities, tools, and labor necessary for duties to be performed at the site by the Owner's Testing Agency and Inspector, including furnishing ladders, hoisting, lighting, water supply and like services.

F. Provide and maintain, for the sole use of the Owner's Testing Agency, adequate facilities for the safe storage and proper curing of concrete test cylinders on the Project site as required by ASTM C31.

G. Furnish and deliver samples of materials to be tested at no extra cost to Owner. Test samples will be selected by the Inspector or Owner's Testing Agency and not by the Contractor.

H. Reports:

1. Furnish copies of each test and inspection report, signed and certified by the Contractor's Testing Agency Supervising Engineer to the Contractor and to the Engineer.

2. Within 48 hours, process and distribute the required copies of test reports and related instructions to assure necessary retesting and replacement of materials with the least possible delay in progress of the work.

I. Records:

1. Maintain correct records on an appropriate form for all inspections and tests performed, instructions received from the Owner or testing agency, and actions taken as a result of those instructions.

2. These records shall include evidence that the required inspections or tests have been performed (including type and number of inspections or tests, nature of defects, causes for rejection, etc.), proposed or directed remedial action, and corrective action taken.

3. Document inspections and tests as required by each Section of the Specifications.

J. If laws, ordinances, rules, regulations, or orders of public agency having jurisdiction require work to be inspected, tested or approved by some authority other than the Owner, or Contractor, the Contractor shall give required notices and make arrangements, deliver to the Owner the certificates of inspection, test, or approval of such public agency, and pay costs therefore unless otherwise provided in the Contract Documents.

K. Completed Work: Should the Owner require tests and inspections for work completed before final acceptance of entire work, furnish necessary facilities, labor, and materials to uncover or remove work in question to extent necessary.

DocuSign Envelope ID: D92FB7CA-DD9A-40FF-B59F-20FB66385E4F

1. If such work is found defective due to fault of the Contractor, the Contractor shall defray expense of removal, test, and inspections, and satisfactory reconstruction. Time extension may not be granted.
2. If such work is found to conform to requirements of the Contract, the Contractor shall be reimbursed by the Owner for facilities, labor and materials required for removal, and costs of satisfactory reconstruction in accordance with Contract amounts for extra work. Reasonable time extension shall be granted.

1.05 TEST PROCEDURES

A. Testing:

1. Owner's Testing Agency will perform tests according to method(s) of test specified in these Specifications.
2. If no procedure or test method is specified, testing shall conform to material specification references unless otherwise directed by the Owner.
3. The Owner's Testing Agency will tag, seal, label, record, or otherwise suitably identify the materials for testing. No materials shall be used in the work until the test reports are submitted and approved, excepting only the materials specified to be placed or installed prior to testing.

B. Retesting:

1. Repeat applicable tests at specified intervals, when:
   a. The source of supply is changed.
   b. The characteristics of the materials change or vary.
   c. Unsatisfactory test results are received.
2. Quantity and nature of additional testing, if required, will be determined by the Owner.
3. Additional tests shall be taken in the presence of the Engineer.
4. Proof of non-compliance will make the Contractor liable for any corrective action which the Owner feels is prudent, including complete removal and replacement of defective materials.
5. Nothing contained herein is intended to imply that the Contractor does not have the right to have tests performed on any material at any time for his own information and job control so long as the Owner does not assume responsibility for costs or for giving them consideration when appraising quality of materials.

1.06 PAYMENT FOR TESTING

A. Initial Services:

1. The Owner will pay for initial testing services requested by the Owner.
2. When initial tests indicate non-compliance with the Contract Documents, the costs of initial tests associated with that non-compliance will be deducted by the Owner from the Contract Sum.

DocuSign Envelope ID: D92FB7CA-DD9A-40FF-B59F-20FB66385E4F

B. When initial tests indicate non-compliance with the Contract Documents, subsequent retesting occasioned by the non-compliance shall be performed by the same testing agency, and costs thereof will be deducted by the Owner from the Contract Sum.

C. Reimburse the Owner all or any part, as the Owner may deem just and proper, of the inspection costs incurred by the Owner due to:

1. Failure of materials to pass initial tests.
2. Contractor's failure to complete the work within the Contract time, and any previously authorized extensions thereof.
3. Claims between separate contractors.
4. Covering of work before the required inspections or tests are performed.
5. Additional inspections required for Contractor's correction of defective work.
6. Overtime costs for acceleration of work done for Contractor's convenience.

1.07 CONTRACTOR'S CONVENIENCE TESTING

A. Inspection and testing performed exclusively for the Contractor's convenience shall be the sole responsibility of the Contractor.

1.08 REQUEST FOR TESTING PROCEDURES

A. Testing will be performed as ordered by the Owner's Representative. Contractor shall follow the Owner's Representative's procedures for requests for tests and inspections. Procedure are as follows:

1. Fill out the Request for Testing form provided by the Owner's Representative.
2. Describe the test and the date the test is required. The request will be given to the Owner's Representative for approval.
3. Submit the Request for Test at least forty-eight (48) hours in advance of the needed date for the test.
4. The Owner's Representative will request the services from the testing agency.
5. The testing agency will be provided a copy of the testing request which will be completed by the testing firm indicating the services provided.
6. Provide a testing schedule which will be reviewed each week for the following week's work.

PART 2 - PRODUCTS (NOT USED)

PART 3 - EXECUTION (NOT USED)

END OF SECTION

DocuSign Envelope ID: D92FB7CA-DD9A-40FF-B59F-20FB66385E4F

SECTION 01 45 06

SPECIAL TESTS AND STRUCTURAL OBSERVATIONS

PART 1 - GENERAL

1.01 SECTION INCLUDES

A. Requirements for providing special tests and structural observations required by the International Building Code.

B. The Contractor shall cooperate with the Owner and Engineer in performing Special Inspections of the Work.

C. Special Inspections shall be performed by an agent under contract or employment by the Owner.

1.02 SCHEDULE OF INSPECTIONS/OBSERVATIONS

A. Special inspections and structural observations will be performed in accordance with Chapter 17 of the Building Code. The most recent version of the Code shall be utilized.

B. Special inspections and tests are listed in Appendix A - Schedule of Special Inspections following this specification. Certain individual specification Sections may contain Special Inspections and tests specific to those sections.

C. Structural Observations are described in Appendix B - Schedule of Structural Observations following this specification.

1.03 DEFINITIONS

A. **Approved Agency:** An established and recognized agency regularly engaged in conducting tests or furnishing inspection services, when such agency has been approved by the Building Official.

B. **Approved Fabricator:** An established and qualified person, firm, or corporation identified as such by AISC or the Building Official. Approval is based on written procedural and quality control manuals and periodic auditing of fabrication practices by an Approved Agency.

C. **Building Official:** Owner's representative.

D. **Continuous Special Inspection:** The full-time observation of Work by a Special Inspector who is present in the area where the Work is being performed as it is performed.

E. **Fabricated Item:** Structural, load-bearing, or lateral load-resisting assemblies consisting of materials assembled prior to installation in a building or structure, or subjected to operations such as heat treatment, thermal cutting, cold working, or reforming after manufacture and prior to installation in the building or structure. Materials produced in accordance with standard specifications referenced in the Contract Documents or the Code, such as rolled structural steel shapes, steel-reinforcing bars, masonry units, and plywood sheets are not Fabricated Items.

DocuSign Envelope ID: D92FB7CA-DD9A-40FF-B59F-20FB66385E4F

F. **Periodic Special Inspection:** The part-time or intermittent observation of Work by a Special Inspector who is present in the area where the Work has been or is being performed and at the completion of the Work.

G. **Special Inspection:** Inspection as herein required of the materials, installation, fabrication, erection or placement of components and connections requiring special expertise to ensure compliance with the Contract Documents and referenced standards. Special Inspection does not include, waive, or otherwise affect the Contractor's responsibility for inspections required by the Contract Documents.

H. **Special Inspector:** An individual employed by an Approved Agency who is regularly engaged in conducting tests and furnishing Special Inspection services. The Special Inspector will be approved by the Building Official.

I. **Structural Observer:** Registered design professional and agent of the Engineer, who provides Structural Observation services during construction.

J. **Structural Observation:** Visual observation by a Structural Observer of the structural system for general conformance to the Contract Documents at significant construction stages and at completion of the structural system. Structural observation does not include, waive, or otherwise affect the Contractor's responsibility for inspections required by the Contract Documents.

1.04 SUBMITTALS

A. When fabrication of assemblies that would otherwise require Special Inspection is done on an Approved Fabricator's premises, the following shall be submitted:

1. At completion of fabrication, the Approved Fabricator shall submit to the Engineer and the Building Official a certificate of compliance stating that the Work was performed in accordance with the Contract Documents.

1.05 CONTRACTOR RESPONSIBILITIES

A. In performing the Work, the Contractor shall cooperate with the Special Inspector and the Structural Observer, so that the Special Inspections and Structural Observations may be performed without hindrance.

B. The Contractor shall review the Schedule of Special Inspections in Appendix A, the Schedule of Structural Observations in Appendix B, and individual specification sections and shall be responsible for coordinating and scheduling inspections and observations. The Contractor shall notify the Engineer at least 48 hours in advance of a required Special Inspection or Structural Observation.

C. If any Work that is to receive any Special Inspection or Structural Observation is covered without concurrence in writing from the Engineer, it shall be uncovered at the Contractor's expense unless the Contractor has given the notice required above and the Special Inspector or Structural Observer has not acted with reasonable promptness to such notice. Removal and replacement of any finished Work damaged by the uncovering process or as required for corrective action shall be at the Contractor’s expense.

D. The Contractor shall furnish incidental labor and facilities for access to the Work to be inspected or observed, and shall facilitate observations and inspections.

DocuSign Envelope ID: D92FB7CA-DD9A-40FF-B59F-20FB66385E4F

E. The Contractor shall keep at the Site the latest set of Contract Drawings, field sketches, change orders, approved submittals, and specifications for use by the Special Inspector and Structural Observer.

F. The Special Inspection and observation program shall in no way relieve the Contractor of this obligation to perform Work in accordance with the requirements of the Contract Documents or from implementing an effective Quality Control program.

G. Contractor's quality control personnel shall first review all Work that is to be subjected to Special Inspection or Structural Observation.

H. Prior to the beginning of construction, the Contractor shall have a pre-construction meeting with the Engineer, Owner, Special Inspector, and Structural Observer, to review the Special Inspection and Structural Observation requirements.

I. Contractor shall be responsible for the Special Inspection cost of any replacement and re-testing or re-inspection of Work that is determined to be Defective Work.

1.06 INSPECTION OF FABRICATIONS

A. When Work is performed on the premises of an Approved Fabricator, no Special Inspection is required.

1.07 PAYMENT FOR TESTING

A. The owner will pay for initial testing services requested by the Owner.

B. When initial tests indicate non-compliance with the Contract Documents, subsequent retesting occasioned by the non-compliance shall be performed by the same testing agency and costs thereof will be deducted by the Owner from the Contract Sum.

1.08 CONTRACTOR'S CONVENIENCE TESTING

A. Inspection and testing performed exclusively for the Contractor's convenience shall be the sole responsibility of the Contractor.

1.09 RECORDS AND REPORTS

A. The Special Inspector will prepare detailed daily reports of each Special Inspection. Reports shall be submitted daily to the Owner and Engineer.

B. The Structural Observer will prepare detailed reports of each structural observation. Reports shall be submitted daily to the Owner and Engineer.

C. Any deviations from the Contract Documents found during a Special Inspection or Structural Observation will be immediately reported to the Contractor. If the discrepancies are not corrected promptly, the Special Inspector or Structural Observer will notify the Engineer and Building Official. Daily reports will identify all discrepancies and the corrective actions taken.

1.10 FINAL REPORTS OF SPECIAL INSPECTIONS AND STRUCTURAL OBSERVATIONS

A. The Final Report of Special Inspections, completed by the Special Inspector, will be submitted to the Engineer and Building Official prior to issuance of a Certificate of Use and Occupancy.

DocuSign Envelope ID: D92FB7CA-DD9A-40FF-B59F-20FB66385E4F

B. The Final Report of Special Inspections will certify that required inspections have been performed and will itemize any deviations that were not corrected or resolved.

C. The Final Structural Observation Report will certify that Site visits have been made and identify any deviations, which, to the best of the Structural Observer's knowledge, have not been corrected or resolved.

PART 2 - PRODUCTS (NOT USED)

PART 3 - EXECUTION (NOT USED)

DocuSign Envelope ID: D92FB7CA-DD9A-40FF-B59F-20FB66385E4F

APPENDIX A

SCHEDULE OF SPECIAL INSPECTIONS

Required inspections and tests are described in the following "Schedule of Special Inspections" and in the individual Specification Sections for the items to be inspected or tested.

1.01 FABRICATORS

A. Where fabrication of structural load-bearing members and assemblies is performed at a fabricator's shop, no Special Inspection is required if the fabricator is an Approved Fabricator. If the fabricator is not, then Special Inspection will be required.

1.02 STEEL CONSTRUCTION

A. Welding inspection will be in compliance with AWS D1.1.

B. The Special Inspector will inspect the steel to verify compliance with the details on the Contract Drawings, such as bracing, stiffening, member locations and proper application of joint details at each connection.

C. Installation of high strength bolts will be inspected periodically in accordance with American Institute of Steel Construction specifications and Oregon Structural Specialty Code.

D. While the Work is in progress, the Special Inspector will determine that the requirements for bolts, nuts, washers, bolted parts, painting, and installation and tightening in such standards are met.

E. For bolts requiring pretensioning, the Special Inspector will observe the pre-installation testing and calibration procedures when such procedures are required by the installation method or by the Contract Documents; determine that all plies of connected materials have been drawn together and properly snugged; and monitor the installation of bolts to verify that the procedure for tightening is proper. For joints required only to the snug tight condition, the Special Inspector will only verify that the connected materials have been drawn together and properly snugged.

F. Monitoring of bolt installation for pretensioning will be performed on a periodic basis when the Contractor uses the turn-of-nut method with matchmarking techniques, the direct tension indicator method, or the alternate design fastener (twist-off bolt) method. Joints designed as snug tight will be inspected only on a periodic basis.

G. Monitoring of bolt installation for pretensioning using the calibrated wrench method or the turn-of-nut method without matchmarking will be performed on a continuous basis.

DocuSign Envelope ID: D92FB7CA-DD9A-40FF-B59F-20FB66385E4F

REQUIRED VERIFICATION AND INSPECTION OF STEEL CONSTRUCTION

Verification And Inspection	Inspection		Referenced Standards
	Continuous	Periodic	
Material verification of high-strength bolts, nuts, and washers:			Applicable ASTM material Specifications; AISC ASD, Section A3.4; AISC LRFD, Section A3.3
• Identification markings conforming to ASTM standards indicated in the Contract Documents.		X	
• Manufacturer's certificate of compliance required.		X	
Inspection of high-strength bolting:			AISC LRFD Section M 2.5
• Bearing-type constructions		X	
• Slip-critical connections	X		
Material verification of structural steel:			ASTM A6 or ASTM A568
• Identification markings conforming to ASTM standards indicated in the Contract Documents.		X	
• Manufacturer's certified mill test reports required.		X	
• Material verification of weld filler materials:		X	AISC, ASD, Section A3.6; AISC LRFD, Section A3.5
• Identification markings conforming to AWS specification indicated in the Contract Documents.		X	
• Manufacturer's certificate of compliance required.		X	
Inspection of welding – Structural steel:			AWS D1.1 AISC Seismic AWS D1.3
• Complete and partial penetration groove welds.	X		
• Multi-pass fillet welds.	X		
• Single-pass fillet welds > 5/16-in (7.9 mm).	X		
• Single-pass fillet welds ≤ 5/16-in (7.9 mm).		X	
• Welded studs when used for structural diaphragms or composite systems.		X	
Inspection of welding – Reinforcing steel:			AWS D1.4 ACI 318 - 3.5.2 OSSC 1903.2
• Verification of weldability of reinforcing steel other than ASTM A706		X	
• Reinforcing steel resisting flexural and axial forces and boundary elements of special structural walls of concrete and shear reinforcement	X		
• Shear reinforcement.	X		
• Other reinforcing steel.		X	
Inspection of steel frame joint details for compliance with the Contract Documents			OSSC 1705.2
• Details such as bracing and stiffening.		X	

Verification And Inspection	Inspection		Referenced Standards
	Continuous	Periodic	
• Member locations.		X	
• Application of joint details at each connection.		X	
• Welded sheet steel for cold- formed steel framing members such as studs and joists.		X	
• Welding of stairs and railing systems.		X	
• Floor and deck welds.		X	Floor and deck welds.

1.03 CONCRETE CONSTRUCTION

A. No Special Inspection will be required for minor sitework concrete and non-structural slabs on grade as approved by the Engineer.

REQUIRED VERIFICATION AND INSPECTION OF CONCRETE CONSTRUCTION

Verification And Inspection	Inspection		Referenced Standards
	Continuous	Periodic	
Inspection of reinforcing steel, including prestressing tendons, and placement.		X	ACI 318: Ch. 20, 25.2, 25.3, 26.6.4-26.6.3 OSSC 1908.4
Inspection of reinforcing steel welding in accordance with inspection of steel table above.	X		AWS D1.4 ACI 318: 26.6.4
Inspect bolts to be installed in concrete prior to and during placement of concrete.	X		
Verifying use of required design mix.		X	ACI 318: Ch. 19, 26.4.3, 26.4.4 OSSC 1904.1, 1904.2, 1908.2, 1908.3
Sampling fresh concrete and performing slump, air content and determining the temperature of fresh concrete at the time of making specimens for strength tests.	X		ASTM C172 ASTM C31 ACI 318: 26.5, 26.12 OSSC 1908.10
Inspection of concrete placement for proper application techniques.	X		ACI 318: 26.5.3-26.5.5 OSSC 1908.9
Inspection for maintenance of specified curing temperature and techniques.		X	ACI 318 - 5.11-5.13
Post installed anchor installation.	X		Per ICC-ES Reports
Inspect formwork for shape, location and dimensions of the concrete member being formed.		X	ACI 318: 26.11.1.2(b)

DocuSign Envelope ID: D92FB7CA-DD9A-40FF-B59F-20FB66385E4F

APPENDIX B - SCHEDULE OF STRUCTURAL OBSERVATIONS

Required observations are described in the following "Schedule of Structural Observations".

WHEN TO OBSERVE	WHAT TO OBSERVE
FOUNDATIONS – GENERAL	
Prior to the first concrete pour, but after placement of reinforcing is well under way.	Review areas of particular concern such as highly congested areas or any mechanically-coupled splices and check that approved placing plans are being used.
	Review anchor bolt placement and placement of hold-down bolts or steel embeds.
CONCRETE CONSTRUCTION	
Prior to close-up of the column or wall forms. During placement of slab/beam/joist reinforcement.	Reinforcement placement and placement of embedded items. The Engineer may elect to personally observe concrete placement for critical structural elements.

END OF SECTION

DocuSign Envelope ID: D92FB7CA-DD9A-40FF-B59F-20FB66385E4F

SECTION 01 52 00

CONSTRUCTION FACILITIES AND UTILITIES

PART 1 - GENERAL

1.01 SECTION INCLUDES

A. Requirements for Contractor's temporary facilities at the job site and for the prosecution of the Work.

1.02 CONTRACTOR'S CONSTRUCTION OFFICE

A. Maintain a suitable office at the site.

B. Temporary office will be considered as the headquarters of the Contractor's representative who is authorized to receive drawings, instructions, or other communication or articles. Any communication given to the representative or delivered at Contractor's temporary office at the site in his absence is deemed to have been delivered to the Contractor.

C. Maintain copies of the Drawings, Specifications, and other Contract documents at Contractor's temporary office at the site and make these available for use at all times.

1.03 OWNER'S FIELD OFFICE

A. The Contractor shall provide, maintain, and subsequently remove as its property, field offices as specified below, for the free and exclusive use of the Owner throughout the duration of the work of this contract.

B. The field office, equipped as specified, shall be available at the site within three (3) weeks of Notice to Proceed for the Owner's use. The field office shall be located where directed in close proximity to the Contractor's field office, and relocated, when necessary, at no additional cost to the Owner.

C. The Contractor shall maintain the field offices in good repair and acceptable appearance and shall provide daily cleaning service and constant maintenance and replenishment, as applicable, of paper towels, paper cups, soap, toilet paper, and bottled water service.

D. Sanitary facilities shall be provided complying with state and local governing authorities.

E. The Owner's temporary field office shall remain in service until work is complete and a Notice of Completion is provided by the Owner.

1.04 CONTRACTOR'S FACILITIES

A. The Contractor shall maintain the Contractor's facilities during construction in a manner that will not obstruct roads or access to existing WRF facilities. The Contractor shall proceed with its work in an orderly manner, maintaining the site free of debris and unnecessary equipment or materials. The Contractor shall perform the construction in a manner and schedule such that access to the treatment plant facilities are available at all times.

B. Within the WRF site, the Contractor shall use only the designated road(s) for regular access to work sites. The Contractor shall maintain, keep clean, and repair the designated

DocuSign Envelope ID: D92FB7CA-DD9A-40FF-B59F-20FB66385E4F

access road during the contract period, and restore the road to original or better condition at the end of the work. The Contractor shall enter and exit the site as indicated on the Drawings, unless otherwise authorized by the Owner.

C. Contractor's employees shall not use any of the Owner's facilities or supplies, including telephones, sanitary facilities, trash receptacles, or vehicles.

D. Contractor's Field Office:

1. Contractor shall maintain a suitable temporary office at the site.

2. As a minimum, the Contractor's office shall have telephone services with an answering machine, power, and sanitary facilities.

3. Temporary office will be considered as the headquarters of the Contractor's representative who is authorized to receive drawings, instructions, or other communication or articles. Any communication given to the representative or delivered at Contractor's temporary office at the site in his absence is deemed to have been delivered to the Contractor.

4. Maintain copies of the Drawings, Specifications, and other Contract documents at Contractor's temporary office at the site and make these available for use at all times.

5. Contractor shall not occupy its field office until the Owner's field office is on site and ready for use in accordance with these Specifications.

6. The Contractor's temporary field offices shall remain in service until work is complete.

1.05 STAGING AREA

A. Before starting the work, submit a proposed plan and layout for all temporary offices, sanitary facilities, storage areas, temporary water service and distribution, and temporary power service and distribution.

B. Erect temporary security fence as appropriate. Contractor is responsible for the security of the staging area. Owner and Engineer do not take any responsibility for missing or damaged equipment, tools, or personal belongings.

C. Store only those materials and equipment that are related to the construction within the staging area.

1.06 FENCES

A. Erect temporary fences at the boundary of construction easements and in locations indicated on the Drawings to protect existing wetlands and other environmentally sensitive areas.

B. When existing fences require temporary removal, and these fences are required to restrain animals and stock, erect fences to prevent animals from escaping. Contractor shall be responsible for loss, injury or damage that results from failure to restrain animals and stock.

C. When working in open areas where animals and stock are maintained, provide adequate temporary fencing around open excavations to prevent injury to animals and stock.

DocuSign Envelope ID: D92FB7CA-DD9A-40FF-B59F-20FB66385E4F

PART 2 - PRODUCTS

2.01 OWNER'S FIELD OFFICE

A. Field offices for the Owner's exclusive use shall be as follows:

1. Main field office structure: Approximately 12 feet by 56 feet, including a toilet room. Williams Scotsman or equivalent.
2. Construction: Weathertight building constructed at the site, pre-manufactured building, or trailer, with a toilet room containing a water closet and lavatory, partitioned off from the working area. The water closet may be of the chemical type provided that it is a flush type with an approved holding tank.

B. Trailer type mobile structure(s) shall have the following features:

1. All metal frame.
2. All metal exterior, sides, and roof.
3. Openings: At least 6 windows and 2 entrance doors, each with cylinder lock and 4 keys.
4. Exterior lighting over entrance door.
5. Twenty 110 VAC duplex receptacles with at least 2 in each office.
6. Security guard screens on all windows.
7. Horizontal sliders with blinds on all windows.
8. Floor: resilient flooring
9. Insulated double walls, floor, and roof.
10. Walls and ceiling: Insulated with finished interior surfaces.
11. Self-contained, built-in electric heater with central air conditioning unit.
12. Fluorescent ceiling lights. Adequate lighting to provide 100 foot-candles at desk height.
13. Minimum interior height shall be 8'.
14. Railed stairway to entrances.
15. Smoke detectors and outside alarm.
16. The Contractor shall provide and install a 2-A-10-BC fire extinguisher. Fire extinguisher shall be mounted so as to be plainly visible at all times. The Contractor shall service the fire extinguisher on an annual basis.
17. Signs
    a. Main field office reading "Owner's Field Office" on first line and "Name of Owner" with logo on the second line, with letter height 4" minimum
    b. Security Office reading "No Unauthorized Personnel" on the first line and "Access Badge Required - Please Sign In" on the second line with letter height 4" minimum.
18. Boot brush.

DocuSign Envelope ID: D92FB7CA-DD9A-40FF-B59F-20FB66385E4F

19. Security alarm and security contract with Bay Alarm Company, Sonitrol, or equal.

C. Contractor Shall Arrange and Pay For:

1. Janitorial service, including daily dusting, floor cleaning, and trash removal, and weekly comprehensive cleaning, including windows.

2. A continuous supply of toilet paper, paper hand towels and hand soap for each restroom.

3. Bottled drinking water service with chilled and hot water dispenser. Provide minimum four 5-gallon bottles of water per month.

4. Suitable restroom facilities with sinks with hot and cold water.

2.02 OWNER'S FIELD OFFICE EQUIPMENT

A. The Contractor shall furnish and install four external voice land lines. These phone lines shall be independent of the Contractor's phone lines. One phone line shall be installed in the conference room trailer. Regular (local and long distance) phone service charges for the Owner's field office will be paid by the Owner. The Contractor shall be responsible for coordination, installation charges, and monthly billing with the telephone company (coordinate with Owner).

B. Contractor shall furnish high speed internet service as specified herein. The Contractor shall be responsible for coordination, installation charges, and monthly billing with the local power company (coordinate with Owner).

C. Contractor shall install temporary power lines and facilities for power to the trailer.

D. The Contractor shall submit all office plans to the Owner for approval.

E. Provide the following furnishings and equipment:

1. Office desks: Two, with 6 drawers (2 with locks) and two padded, upholstered swivel chairs.

2. Drafting table: one, not less than 36 inches by 60 inches.

3. Metal drafting stools with backs: 0ne.

4. Eight stackable chairs.

5. Metal filing cabinets:

a. Two 4-drawer vertical cabinets, 18"W x 30"D x 52"H

b. Two 4-drawer lateral cabinets, 36"W x 19-1/4"D x 53-1/4"H

6. Supply cabinet: 1, with not less than 15 square feet of shelves.

7. Steel bookcases: two, five-shelf (four adjustable), 34-1/2"W x 12-5/8"D x 72"H.

8. Plan hold rolling stand of 12 binders: one, with binders.

9. Wastebaskets: six.

10. Dry erase board 96 by 48 inches, magnetic.

11. Refrigerator, 6.0 cubic feet capacity.

12. Conference table: one, at least 10 feet long by 3 feet wide.

DocuSign Envelope ID: D92FB7CA-DD9A-40FF-B59F-20FB66385E4F

13. Secretary desk with return section for open area

14. One Swivel chair for secretary

15. Field Office Data Service and Equipment:

    a. Provide one of the following data services (listed in order of preference) for unlimited use by the Owner and the Owner for the duration of the project. Contractor is responsible for all maintenance of service and hardware. Data service will be dedicated to the Owner and not shared with any other party. The Contractor shall provide a durable and weathertight system for connecting the Owner's trailer to the service provider's facilities at the jobsite boundary: Contractor is responsible for all maintenance of service and hardware:

    b. Provide high-speed Internet access (DSL or cable modem)

        1) Requirements: Minimum 6 Gb per second download. This access must have a minimum of 8 (5 usable) IP address. In addition, it must provide an average round-trip delay of less than 150 ms to the Owner's Internet gateway.

        2) Equipment: Provide appropriate DSL or cable modem device. In addition, provide the following:

            a) Cisco ASA 5505 firewall with 3DES software, part number ASA5505-SEC-BUN-K9 and Cisco 4-hour response onsite Smartnet Maintenance for duration of project.

            b) Cisco Aironet 3500 Series Wireless Access Point Model No. AIR-CAP3502I-A-K9.]

    c. Provide private line or frame-relay Internet access.

        1) Requirements: T1 speed. This access must have a minimum of 8 (5 usable) IP address. In addition, it must provide an average round-trip delay of less than 150 ms to the Owner's Internet gateway.

        2) Equipment:

            a) Visual Networks IP Enterprise central office T1 drop-and-insert CSU/DSU.

            b) Cisco 2911 router bundle, Cisco part number 2911/K9 and Cisco 4-hour response onsite Smartnet Maintenance for duration of project.

            c) Serial interface card, Cisco part number HWIC-1T.

            d) Serial cable, Cisco part number CAB-SS-V35MT.

            e) Security license, Cisco part number SL29-SEC-K9.

            f) Cisco Aironet 3500 Series Wireless Access Point Model No. AIR-CAP3502I-A-K9.]

    d. Service shall be in place and ready for use no later than fifteen (15) calendar days after the Contractor's receipt of Notice to Proceed.

DocuSign Envelope ID: D92FB7CA-DD9A-40FF-B59F-20FB66385E4F

16. Field office local area network: Provide the following to create a local area network for the Owner:

    a. Install Category 5e cabling to support all specified computers, printers, and other network device. This cabling should be home-run to a patch panel and meet all applicable installation standards for CAT5e. Patch panel and jack locations to be coordinated with Owner.

    b. Provide 10/100/1000Ethernet Switch sized to support all specified network devices for Owner with an allowance for 50 percent growth/spare ports. Each office must have a network connection port.

    c. Provide APC SmartUPS RT 1500 uninterruptable power supply, model SURTA1500XL.

    d. Provide Category 5e patch cables for all networking equipment; both for patch panel to switch connection and for wall jack to network device connection.

17. Field office computer systems: Furnish and install two (2) new complete computer systems. Contractor is responsible for all maintenance of hardware and software. Each system shall consist of, as a minimum:

    a. Intel® Core i7 processor.

    b. Minimum 500 GB hard disk.

    c. Minimum 8 GB RAM.

    d. Minimum 4 USB ports.

    e. Two LCD Monitors per computer, 22-inch widescreen 1680 by 1050 with VGA interface. Brand should be LG or Owner-approved equivalent.

    f. Minimum 128 MB video card.

    g. Keyboard: 101 key, USB.

    h. Mouse: USB with mouse pad

    i. Sony DRU-840A (20x max, dual format, DVD +/R) drive, or equivalent

    j. Sound card and speakers.

    k. Intel Etherexpress 10/100/1000 RJ-45 PCI network card. Gigabit Network card adapter.

    l. Docking stations, cables, connectors, and controller cards, as necessary, to provide a functioning system, including computer accessories.

    m. A/C surge suppressor sized for computer system.

    n. USB flash media storage device: 64 GB.

    o. Media: 100 DVD-R.

    p. Microsoft Windows 10 Professional operating system.

    q. Microsoft Office Professional plus, current version

    r. Adobe Acrobat Standard, latest version (full package, not just the free reader).

    s. Microsoft Security Essentials or equivalent anti-virus/malware protection, latest version.

DocuSign Envelope ID: D92FB7CA-DD9A-40FF-B59F-20FB66385E4F

t. Current version of Business and Legal Reports Safety Training Presentations, Product Code 11006100.

18. Additional computer-related items:

a. Printers:

1) Dedicated to Owner allowing configuration behind Owner's firewall.

2) Full size color multifunction printer/copier capable of copying, printing, and scanning 11 by 17 paper size and send and receive Fax.

a) Toshiba Studio 2050C or equal.

b) Onsite Toshiba maintenance for duration of project.

c) Paper, toner, and other supplies for duration of project.

F. Locate field office where directed.

G. Have field office ready for occupancy within 2 weeks after start of site work.

PART 3 - EXECUTION

3.01 TEMPORARY ELECTRIC POWER

A. Contractor shall make provisions to obtain temporary electric power for use during construction. The Contractor shall be responsible for obtaining a source of electric power for construction.

B. Cost of electric power shall be borne by the Contractor.

C. The temporary electric power installation shall meet the construction safety requirements of OSHA, state, and other governing agencies.

3.02 TEMPORARY TELEPHONE SERVICE

A. Provide telephone service at the construction site office. Cellular telephone service is acceptable.

B. The Contractor is not permitted to use the Owner's telephone service.

3.03 TEMPORARY SANITARY FACILITIES

A. Provide toilet and wash-up facilities for the construction work force at the site of work.

B. Facilities shall comply with applicable laws, ordinances, and regulations pertaining to the public health and sanitation of construction field offices, dwellings, and camps.

3.04 TEMPORARY WATER SUPPLY

A. Use potable water for soil moisture conditioning, pipeline pressure testing, and other construction uses.

B. Obtain approvals and authorizations from the owner of the public water distribution system for use of water and pay all fees associated with consumption of the potable water.

DocuSign Envelope ID: D92FB7CA-DD9A-40FF-B59F-20FB66385E4F

1. Make the necessary connections to the public water supply and install all conveyance piping and truck filling facilities that are required to transport water for the work.
2. Temporarily install valves, flow meters, air gaps, backflow preventers and other appurtenances required by the owner of the public water distribution system to maintain the integrity of the existing water systems.
3. Remove temporary water facilities when no longer needed.

END OF SECTION

DocuSign Envelope ID: D92FB7CA-DD9A-40FF-B59F-20FB66385E4F

SECTION 01 57 19

ENVIRONMENTAL CONTROLS

PART 1 - GENERAL

1.01 SECTION INCLUDES

A. Environmental controls to be maintained during construction.

1.02 APPLICABLE LAWS AND REGULATIONS

A. Comply with applicable Federal, State and local environmental, health and safety laws and regulations.

1.03 REFERENCED SECTIONS

A. The following Section is referenced in this Section

1. Section 01 33 00 – Submittals
2. Section 31 23 19 – Dewatering

1.04 SUBMITTALS

A. Comply with Section 01 33 00.

B. Copies of permits and approvals for construction as required by Laws and Regulations and governing agencies.

C. Plan for disposal of waste materials and intended haul routes.

D. Updated Erosion and Sediment Control Plan meeting the requirements shown on the Drawings and the permit.

1.05 SITE CLEANLINESS

A. Maintain work sites, staging areas, public roadways and private property clean and free of rubbish and debris. Remove materials and equipment from the site when they are no longer necessary for the Work.

B. Keep buildings that are occupied by the Contractor clear of refuse and debris and in a reasonably neat condition.

C. Upon completion of the work and before final acceptance, clear work areas of equipment, unused materials, and rubbish to present a clean and neat appearance.

1.06 HAZARDOUS MATERIALS

A. Handle paints, solvents, and other construction materials with care to prevent contaminants from entering into sewers, storm drains, surface waters, or soils.

B. Develop an emergency response plan for spills of sewage, paint, oil, and other hazardous materials.

C. In the event of a spill, immediately notify the ENGINEER, OWNER and jurisdictional agencies. Take proper measures to clean up spills of hazardous materials in accordance with the emergency response plan, State, Federal, and local regulations and manufacturer's recommendations.

DocuSign Envelope ID: D92FB7CA-DD9A-40FF-B59F-20FB66385E4F

1.07 AIR POLLUTION CONTROL

A. Contractor shall not discharge smoke, dust, and other contaminants into the atmosphere that violate the air pollution regulations for the area.

B. Do not idle internal combustion engines for prolonged periods of time.

C. Minimize dust nuisance by cleaning, sweeping and sprinkling work areas, exposed soil, and haul roads with water or by powered brushing.

1.08 NOISE CONTROL

A. Comply with local controls and noise level rules, regulations, and ordinances which apply to any work performed pursuant to the Contract. If the requirements of this Section are more restrictive than those of the local regulations, the requirements of this Section shall govern.

B. Minimize noise from construction equipment.

1. Whenever possible, utilize construction equipment powered by electric motors rather than diesel or gas driven engines.

2. Locate construction equipment such as compressors and generators as far from sensitive receptors as feasibly possible. Erect temporary sound blankets around noisy equipment to mitigate noise propagation.

3. Equip internal combustion engines with a muffler and provide a noise enclosure around stationary equipment such as engine-driven generators, welders, compressors, and pumps. Use “quiet package” and “hush” equipment.

4. Do not start-up machines or equipment prior to or after the specified construction work hours.

C. Noise Complaints: Should a specific noise impact complaint occur, Engineer has the prerogative to direct Contractor to implement one of the following noise mitigation measures at Contractor’s expense:

1. Relocate stationary construction equipment away from the affected property.

2. Shut off idling equipment.

3. Reschedule construction operations to avoid periods of noise annoyance identified in the complaint.

4. Install temporary or portable acoustic barriers around stationary construction noise sources.

5. Operate electric powered equipment using utility power.

D. Amplified sounds such as telephone, loudspeakers, and other forms of loud communication that constitute a nuisance and potential disturbance shall not be used.

1.09 DIRT AND MUD CONTROL

A. Contractor is responsible for preventing dirt, mud, and debris from accumulating on streets, sidewalks, parking areas, or other paved surfaces and for maintaining the cleanliness of these areas.

1. Track Out: Clean vehicle tires of mud and dirt before exiting the site.

DocuSign Envelope ID: D92FB7CA-DD9A-40FF-B59F-20FB66385E4F

2. Cover all dump truck loads and other loads that may result in debris falling from the vehicle.

3. Sweeping Paved Areas:

   a. Maintain cleanliness of paved areas used by the Contractor for the duration of the project.

   b. Sweep paved areas that have been used since the previous cleaning on at least a weekly basis, or more frequently when directed by the Engineer. Utilize regenerative air or vacuum pickup sweepers together with proper dust control methods to remove sediment, dust, dirt, and other matter from paved areas. Do not use excessive water resulting in mud on public streets.

1.10 TREE AND PLANT PROTECTION

A. Temporary tree protection

1. Carefully protect existing trees from damage by construction activities. Additional requirements for specific trees may be shown on the Plans or designated in the Contract Documents.

2. Every reasonable effort shall be made to avoid creating conditions adverse to the tree's health.

   a. The natural ground within the dripline of protected trees shall remain undisturbed.

   b. The dripline area of protected trees shall be identified on the ground by a circle with a radius measurement from the trunk of the tree to the tip of its longest limb.

   c. No limb shall be cut back in order to change the dripline measurement.

   d. The area within the dripline is a critical area of the tree's root zone and defines the minimum protected area of each tree.

   e. No vehicles, construction equipment, temporary buildings, supplies, materials or facilities shall be driven, parked, stockpiled or located within the dripline of protected trees.

   f. No trees outside the construction limits shall be removed or damaged, unless authorized by the Construction Manager.

3. If a tree is damaged or destroyed by construction (other than those designated for removal), the Contractor shall replace it in species, size and grade with a healthy tree as directed by the Construction Manager. Where it is necessary to replace a tree damaged by construction, the Contractor shall bear all expenses required to establish the replacement tree and pay any tree removal fees.

B. Cultivated areas and other surface improvements:

1. Landscaped areas and other surface improvements which are damaged by actions of the Contractor shall be restored.

2. Minimize vegetation removal.

3. Areas shall not be cleared until construction activities require the work.

DocuSign Envelope ID: D92FB7CA-DD9A-40FF-B59F-20FB66385E4F

4. Erosion controls shall be in place prior to clearing and grading activities.

1.11 OIL SPILL PROTECTION AND CONTROL

A. Store fuel and oil in accordance with requirements of the Uniform Fire Code and applicable National Fire Protection Association standards.

B. Assume responsibility for the prevention, containment, and cleanup of spilled oil, fuel, and other petroleum products used in the Contractor's operations. Prevention, containment and cleanup costs shall be borne by the Contractor.

C. Periodically inspect fuel hoses, lubricating equipment, hydraulically operated equipment, oil drums, and other devices for drips, leaks or signs of damage. Maintain and properly store to prevent spills and vandalism.

D. Construct dikes around storage tanks, or locate tanks to prevent spills from escaping to surface waters or drainage ditches.

E. Remove oils on land using sand, clay, sawdust or other absorbent material and dispose in an acceptable manner. Store waste materials in drums or other leak proof containers after cleanup and during transport to disposal.

1.12 WATER POLLUTION CONTROL

A. Divert sanitary sewage and non-storm waste flow interfering with construction and requiring diversion to sanitary sewers. Do not cause or permit action to occur which would cause an overflow to existing waterway.

B. Prior to commencing excavation and construction, obtain Owner's agreement with detailed plans showing procedures intended to handle and dispose of sewage, groundwater, and stormwater flow, including dewatering pump discharges.

C. Do not dispose of volatile wastes such as mineral spirits, oil, chemicals, or paint thinner in storm or sanitary drains. Disposal of wastes into streams or waterways is prohibited. Provide acceptable containers for collection and disposal of waste materials, debris, and rubbish.

1.13 EROSION, SEDIMENT, AND FLOOD CONTROL

A. Provide, maintain, and operate temporary facilities to control erosion and sediment releases, and to protect the Work and existing facilities from flooding during construction period.

B. Comply with state and local requirements.

C. Comply with Section 31 23 19 Dewatering.

END OF SECTION

DocuSign Envelope ID: D92FB7CA-DD9A-40FF-B59F-20FB66385E4F

SECTION 01 57 29

SEWER BYPASS PUMPING

PART 1 - GENERAL

1.01 SECTION INCLUDES

A. Requirements for establishing and operating temporary bypass pumping systems for the purpose of diverting flow around work areas.

B. Furnish labor, materials, equipment, utilities, power, fuel and consumable items and incidentals to design, install and maintain operation of temporary pumping systems.

1.02 REFERENCED SECTIONS

A. The following Section is referenced in this Section

1. Section 01 12 16 – Work Sequence and Constraints
2. Section 01 33 00 – Submittals

1.03 SUBMITTALS

A. Comply with Section 01 33 00.

B. Prepare a temporary pumping plan and submit for review and approval. Include, at a minimum, the following:

1. Drawings illustrating the proposed intake/suction locations, pump staging areas, pipeline routes, pipeline sizes, and discharge locations. Provide an elevation schematic showing elevation, on/off levels for each temporary pump, and static head.
2. A site plan of each bypass pump system, including proper protection of both existing operations and temporary systems. Include submittals on fuel containment systems.
3. Provide information on generator backup power and automatic transfer switch. Include a site plan showing the proposed location of the generator.
4. Provide system analysis information, including required static lift, frictional and minor headlosses, pipe velocities, and a system curve based on the actual suction and discharge pipeline configuration. Include pipe sizing, material, and quantity information for the temporary piping. Provide pump cut sheets and pump curves showing pump capacity and TDH of the proposed system. Detail the number of pumps used for regular operation and the pumps provided for redundancy.
5. Submit electrical plans (or equivalent for engine driven unit), including panel location, temporary conduit runs, connection to back-up power, etc. Include in the submittal, manufacturer's information for all electrical equipment.
6. Submit manufacturer's information on the pump Variable Frequency Drive (VFD).

DocuSign Envelope ID: D92FB7CA-DD9A-40FF-B59F-20FB66385E4F

7. Provide information on the temporary alarm systems for bypass pumping systems. Include with this information a list of names and telephone numbers of the Contractor's personnel that will be notified by the alarm.

8. Provide a plan detailing the provisions for maintaining operation of the temporary pumping system in the event of mechanical or electrical failure.

9. Submit information on the instrumentation systems that will control the water surface elevation.

10. Provide manufacturer's information for appurtenances used in the bypass pumping system that are necessary for proper operation of the temporary system. Include with this information, cut sheets for additional equipment, as required in this specification.

11. Submit a System Outage Request Form for each bypass/outage plan. Unless otherwise specified, the plan shall be submitted to the Construction Manager for review and approval at least two weeks prior to the scheduled outage. Bypass/outage plan shall comply with construction constraints defined in Section 01 12 16.

12. Submit product information for sound attenuating materials required to meet the local noise requirements.

13. Where applicable, provide information on thrust restraint, temporary pipe supports, and anchorage. Include structural calculations, and thrust block sizing and location.

PART 2 - PRODUCTS

2.01 FLOW REQUIREMENTS

A. Provide, install, operate, and maintain temporary bypass pumping systems necessary to divert the indicated flows below:

Flow (GPM)	Head (FT)
4,200	15

B. Operate the bypass pumping system continuously until the work that requires flow to be re-routed is complete, appropriate testing has been completed, and the completed work is accepted by the Engineer.

2.02 BYPASS PUMPS

A. Basis of Design

1. Type of Pump: Non-clog type design and intended for pumping wastewater.

2. Number of Pumps: Design each temporary pumping system with at least two duty pumps and one redundant standby pump.

3. System Capacity: Capable of providing the maximum specified flow rate with the largest pump out of service.

DocuSign Envelope ID: D92FB7CA-DD9A-40FF-B59F-20FB66385E4F

B. Install pumps in parallel and run on a variable frequency drive to match pump system output flows to flows in the plant. Provide and install level controls as part of the temporary pumping system and design level control system to interface with VFD controls.

C. Either submersible or self-priming pumps are acceptable. Pump priming systems that require foot valves or vacuum pumps will not be allowed.

D. Pumps may be electric or diesel powered. If electric powered, Contractor shall provide a source of electrical power. The existing electric power distribution system at the treatment plant is insufficient to power the temporary pumps. The existing electric power distribution system shall not be utilized by the Contractor.

E. Pumping system control shall be fully automatic and have high level alarms. If one pump fails to start, a second standby pump shall automatically start. Provide necessary start/stop controls and electrical panel with telemetry to notify Contractor of alarms.

2.03 STAND-BY ELECTRIC POWER

A. Provide a back-up electric power supply to ensure that the pumping system is continually operational.

B. Supply an automatic transfer switch with the back-up generator.

C. Equip generator with a sound attenuating enclosure capable of meeting the local noise ordinances.

D. Size stand-by electric power system with adequate capacity to operate the required pumps to meet the peak pumping rates. The emergency power system controls must allow the operation of the lead and the lag pumps, but not allow the operation of multiple pumps beyond the emergency power generator's output rating.

2.04 TEMPORARY PIPING

A. Piping shall be sized for a maximum velocity of 10 feet per second.

B. Acceptable pipe materials are steel, ductile iron, PVC, EPDM rubber hose, and polyethylene.

C. Piping and joints shall not leak or show signs of deterioration or rust.

D. Provide isolation valving on the discharge side of each bypass pump.

PART 3 - EXECUTION

3.01 INSTALLATION

A. Furnish, install, operate, and maintain the temporary bypass pumping system, piping and appurtenances necessary to pump the bypassed sewage flows around the area of work.

3.02 TESTING

A. Test the bypass pumping system for 4 hours before the system is put into operation. Test for proper operation of the overall system and test all controls and alarms. Notify Engineer 24 hours prior to testing.

DocuSign Envelope ID: D92FB7CA-DD9A-40FF-B59F-20FB66385E4F

3.03 INSPECTION/MAINTENANCE

A. Inspect and monitor the bypass pumping system to ensure the system is operating properly. Maintain qualified personnel on-site at all times during the operation of bypass pumping systems, including nights, weekends, and holidays. Resolve problems that may occur with the bypass pumping system.

B. If fuel is required, provide the Engineer with a fueling schedule. It is the Contractor's responsibility to provide fuel necessary to maintain continuous operation of the temporary bypass pumping system.

C. Contractor is fully responsible and liable for damages which may result from failure of the bypass pumping system

3.04 SCHEDULE

A. Bypass Pumping will only take place between July 1 and October 1.

END OF SECTION

DocuSign Envelope ID: D92FB7CA-DD9A-40FF-B59F-20FB66385E4F

SECTION 01 61 10

SEISMIC DESIGN REQUIREMENTS

PART 1 - GENERAL

1.01 SECTION INCLUDES

A. The following primary and secondary structural system elements, non-structural components, and/or equipment supported by structures.

1. Mechanical, electrical, and plumbing equipment and appurtenances.
2. Un-buried Conduit, piping, cable trays, raceways, ducts and similar systems.
3. Un-buried tanks and vessels (include contents), including support systems.
4. Storage racks, suspended ceilings, light fixtures, raised floors, partitions, store-fronts, windows, louvers, architectural features and other non-structural components.

1.02 REFERENCED SECTIONS

A. The following Sections are referenced in this Section

1. Section 01 33 00 – Submittals
2. Section 05 50 01 – Anchor Bolts and Anchoring Devices

1.03 REFERENCES

A. 2019 Oregon Structural Specialty Code (OSSC)

1.04 DEFINITIONS

A. Engineer of Record: The Engineer responsible for the preparation of Contract Documents.

B. Specialty Engineer: Structural or Civil Engineer provided by the Contractor licensed in the State where the project is being built responsible for specific elements of the primary structural system, the secondary structural system, non-structural elements and/or equipment supported by structures.

1.05 GENERAL DESIGN REQUIREMENTS

A. The Contractor is responsible for producing designs that resist the total seismic forces in accordance with the seismic design criteria.

B. The Contractor is responsible for coordinating between the Engineer of Record and the Specialty Engineer.

C. The seismic design for non-structural components and equipment shall be in accordance with the OSSC Chapter 16, and the required coefficients and factors for determining the total design seismic forces are provided in the Seismic Design Criteria in Paragraph E below.

D. Coordinate the layout so that adequate space is provided between items for relative motion. Provide additional supports and restraints between items of different systems when necessary to prevent seismic impacts or interaction.

DocuSign Envelope ID: D92FB7CA-DD9A-40FF-B59F-20FB66385E4F

E. Seismic forces shall be determined in accordance with the following seismic design criteria:

1. Site-Specific Spectral Response Coefficients

   a. Short Period Mapped Maximum Considered Earthquake, 5 Percent Damped: S_S=0.63g

   b. Short Period Mapped Maximum Considered Earthquake, 5 Percent Damped: S_1=0.34g

   c. Short Period Design Spectral Response Acceleration, 5 percent Damped: S_{DS} = 0.42

   d. 1 Second Period Design Spectral Response Acceleration, 5 percent Damped: S_{D1} = 0.23

2. Site Class: B

3. Seismic Design Category: D, unless noted otherwise

4. Risk Category: III, unless noted otherwise

5. Component Importance Factor, Ip:

   a. Mechanical and Electrical Equipment: Use 1.0.

   b. Tanks and Tank Anchorage: Use 1.0.

   c. Components that contain hazardous materials: Use 1.5.

   d. Components that are required for life safety: Use 1.5.

   e. Components that must remain functional after an earthquake, such as fire protection sprinkler systems and egress stairways: Use 1.5.

6. Do not use more than 60 percent of the weight of tanks and mechanical and electrical equipment for designing anchors for resisting overturning due to seismic forces.

7. Consider both conditions of tanks being either empty or full for designing anchors for seismic forces.

8. Do not use friction to resist sliding due to seismic forces.

1.06 DESIGN REQUIREMENTS FOR PIPING, CONDUIT, AND DUCTS

A. The Contractor is responsible for producing designs for support of piping, conduit, duct or other systems to resist total seismic forces based on the seismic design criteria coefficients specified above, unless shown on the Contract Documents. Except where the technical specifications give specific exemption from resistance of seismic forces, all supports shall be designed to meet seismic criteria.

B. Where possible, pipes, conduit, and their connections shall be constructed of ductile materials (e.g., copper, ductile iron, steel or aluminum and brazed, welded or screwed connections). Pipes, conduits and their connections, constructed of nonductile materials (e.g., cast iron, no-hub pipe and plastic), shall have the brace spacing reduced to one-half of the spacing allowed for ductile material.

DocuSign Envelope ID: D92FB7CA-DD9A-40FF-B59F-20FB66385E4F

C. Seismic restraints may be omitted for the following conditions, where flexible connections are provided between components and the associated ductwork, piping and conduit:

1. Where the nominal pipe size is 1 in. or less.

2. Piping, conduit or ducts suspended by individual hangers 12 inches or less in length from the top of the component to the bottom of the structural support. Where rod hangers are used, they shall be equipped with swivels.

3. Air-handling ducts less than 6 square feet in cross-sectional area.

4. See the CBC for additional requirements related to the omitting of seismic bracing.

D. All trapeze assemblies supporting pipes, ducts and conduit shall be braced to resist the total seismic forces considering the weight of the elements on the trapeze. Pipes, ducts and conduit supported by a trapeze where none of those elements would individually be braced need not be braced if connections to the pipe/conduit/ductwork or directional changes do not restrict the movement of the trapeze. If this flexibility is not provided, bracing will be required when the aggregate weight of the pipes and conduit exceed 10 pounds/foot. The weight shall be determined assuming all pipes and conduit are filled with water.

E. As an alternative to designing the supports and anchorage, where an approved national standard provides a basis for the earthquake-resistant design, submit standard, data, and details for piping, conduit, duct or other systems:

1. For ductwork, mechanical piping, process piping and electrical conduits, follow Guidelines for Seismic Restraints of Mechanical Systems by SMACNA modified as follows:

a. Seismically brace piping regardless of size or location. Provide transverse braces at all changes in direction and at the end of all pipe runs. Space transverse braces not more than 20 feet apart. Provide longitudinal braces at 40-foot centers.

b. Seismically brace all ductwork regardless of size or location. Provide transverse braces at all changes in direction and at each end of run. Space braces not over 20 feet apart. Provide longitudinal braces at 40-foot centers.

2. For fire protection systems, follow NFPA 13 modified as in Paragraph 1.b above. Ensure that no seismic interaction occurs with items of other systems.

1.07 DESIGN REQUIREMENTS FOR UNDERWATER ITEMS

A. To allow for water sloshing, design rigid items such as piping or equipment supports for twice the lateral force, computed as if the item were above water. Alternatively, include seismic forces due to hydrodynamic forces in the analysis.

B. Design flexible items to accommodate sloshing motions without damage to rigid machinery.

C. Provide retainers to hold items from falling and damaging rotating equipment below, if bolted connections will fail because of ground motion displacing the supports.

DocuSign Envelope ID: D92FB7CA-DD9A-40FF-B59F-20FB66385E4F

1.08 SUBMITTALS

A. Comply with Section 01 33 00.

B. Shop Drawings: Submit structural calculations and detailed drawings signed and sealed by a structural engineer for the following listed elements and where required in Divisions 2 through 16 of the primary structural system and their attachments, the secondary structural system and their attachments, permanent non-structural components and their attachments, and the attachments and anchorage for all permanent equipment supported by the structures.

1. Electrical and Information Technology Equipment

2. Submersible Solids Handling Pumps and Piping Systems

3. Standby Generators

4. Suspended Ceilings

C. Structural calculations and detailed drawings shall be prepared by a Specialty Engineer licensed in the State where the project is being built.

D. Structural calculations and detailed drawings shall clearly show the total design seismic forces which will be transferred from the elements of the structural system, non-structural components, and/or equipment and their attachments to the primary structure.

E. The Engineer's review of items within a Specification Section cannot be completed until all related items have been coordinated and submitted for review.

F. Quality Assurance Submittals

1. Test Reports: Submit test reports for tension testing of anchors.

2. Where required in the equipment specifications in Divisions 2 through 16 submit certification that the equipment itself is designed to resist all internal seismic forces based on the seismic design criteria for the project.

3. Where required in the equipment specifications in Divisions 2 through 16, submit signed and sealed structural calculations and detailed drawings from a specialty Structural or Civil Engineer licensed in the State where the project is being built for the attachments and anchorage to the primary structure.

4. Where required in the equipment specifications in Divisions 2 through 16, submit certification that the attachments and anchorage are designed to resist all seismic forces based on the seismic design criteria for the project.

1.09 QUALITY ASSURANCE

A. Qualifications: The Contractor is responsible for submitting signed and sealed structural calculations and detailed drawings from a Specialty Structural or Civil Engineer licensed in the State where the project is being built.

B. Regulatory Requirements: Comply with the State of Oregon adopted and amended versions of 2019 Oregon Structural Specialty Code (OSSC) Chapter 16 - Earthquake Design plus clarifications and additions specified in this Section.

DocuSign Envelope ID: D92FB7CA-DD9A-40FF-B59F-20FB66385E4F

PART 2 - PRODUCTS (NOT USED)

PART 3 - EXECUTION

3.01 FIELD QUALITY CONTROL

A. Site Tests:

1. Tension testing of expansion or adhesive anchors utilized for anchorage shall be done in the presence of the special inspector and a report of the test results shall be submitted.

2. See Section 05 50 01 for additional requirements.

B. Inspection:

1. Provide special inspection for high strength bolting or bolts installed in concrete.

2. See Section 05 50 01 for additional requirements.

END OF SECTION

DocuSign Envelope ID: D92FB7CA-DD9A-40FF-B59F-20FB66385E4F

(THIS PAGE LEFT BLANK INTENTIONALLY)

DocuSign Envelope ID: D92FB7CA-DD9A-40FF-B59F-20FB66385E4F

SECTION 01 61 11

SEISMIC ANCHORAGE AND BRACING

PART 1 - GENERAL

1.01 SECTION INCLUDES

A. Requirements for seismic anchorage and bracing for equipment, tanks and nonstructural components.

1.02 REFERENCED SECTIONS

A. The following Sections are referenced in this Section

1. Section 01 33 00 – Submittals
2. Section 01 61 10– Seismic Design Requirements
3. Section 05 50 01– Anchor Bolts and Anchoring Devices
4. Section 23 31 00 – HVAC Ducts and Casings
5. Section 40 05 96 – Seismic Restraints for Piping
6. Section 46 05 13 – General Requirements for Equipment
7. Section 46 05 14 – Equipment Mounting

1.03 AREAS OF DESIGN RESPONSIBILITY

A. The Contractor shall be responsible for designing all seismic attachments, braces, and anchors to the structure for tanks, mechanical equipment and electrical equipment included in the Work that weigh more than 20 pounds.

B. Equipment manufacturers may provide standard design calculations and details for their specific pieces of equipment as part of the submittal for that equipment. Project-specific design calculations and details need not be produced unless the manufacture does not already have standard designs already prepared.

C. Design of seismic anchorage and bracing for piping systems and ventilation ducting is also included in the Contractor's responsibility for seismic design. Refer to Section 23 31 00 and Section 40 05 96 or additional requirements pertaining to seismic anchorage and bracing of piping and HVAC systems.

1.04 REFERENCES

A. The following is a list of standards which may be referenced in this section.

1. International Code Council (ICC)
   a. International Building Code (IBC)
   b. Evaluation Service (ICC-ES) Reports and Legacy Reports
2. American Society of Civil Engineers (ASCE)
   a. ASCE 7, Minimum Design Loads for Building and Other Structures.
3. Oregon Structural Specialty Code (OSSC)

DocuSign Envelope ID: D92FB7CA-DD9A-40FF-B59F-20FB66385E4F

1.05 SUBMITTALS

A. Comply with Section 01 33 00.

B. Seismic Anchorage and Bracing Calculations

1. Submit manufacturer's engineered seismic hardware data and installation requirements.

2. Provide calculations for seismic attachments, braces and anchorages clearly showing the criteria used for the design. Calculations for anchorage of components shall be signed and sealed by a registered Professional Engineer.

C. Shop Drawings: Show details of seismic attachment assemblies including connection hardware, bracing, and anchor bolts.

1.06 DESIGN AND PERFORMANCE REQUIREMENTS

A. In accordance with IBC, tanks, mechanical and electrical components, and other elements of the Work that are permanently attached to structures shall be designed and constructed to transfer the component seismic forces specified in ASCE 7, Chapter 13 to the structure.

B. Seismic attachments, braces, and anchorages shall be designed in accordance with the provisions of the IBC and the site-specific seismic criteria in Section 01 61 10.

C. Comply with Sections 46 05 13 and 46 05 14.

1. Do not use more than 60 percent of the weight of tanks and mechanical and electrical equipment for designing anchors for resisting overturning due to seismic forces.

2. Do not use friction to resist sliding due to seismic forces.

D. In accordance with ASCE 7, the following are exempt from the requirements of this Section:

1. Mechanical and electrical components with a Component Importance Factor of = 1.0 that weigh 400 pounds or less, are mounted 4 feet or less above the adjacent finished floor elevation, and are provided with flexible connections between the components and any associated ductwork, piping, or conduit.

2. Mechanical and electrical components with a Component Importance Factor of = 1.0 that weigh 20 pounds or less, are mounted at any height, and are provided with flexible connections to attached ductwork, piping, and conduit.

PART 2 - PRODUCTS

2.01 MATERIALS

A. Attachments and supports transferring seismic loads to the structure shall be constructed of materials and products suitable for the application and designed and constructed in accordance with the design criteria shown on the Drawings and nationally recognized standards.

B. Do not use powder driven fasteners and sleeve anchors for seismic attachments and anchorages where resistance to tension loads is required.

DocuSign Envelope ID: D92FB7CA-DD9A-40FF-B59F-20FB66385E4F

C. Anchor Bolts: In accordance with Section 05 50 01.

PART 3 - EXECUTION

3.01 GENERAL

A. Design seismic anchorage systems to provide restraint in all directions, for each component or system so anchored.

B. Anchor tall and narrow equipment such as motor control centers and electrical control panels at the base and within 12 inches from the top of the equipment.

C. Mechanical and electrical components shall not be attached to more than one element of a building structure at a single restraint location where such elements may respond differently during a seismic event. Such attachments shall also not be made across building expansion and contraction joints.

D. Provide and install seismic attachments and braces in accordance with the size and number of braces determined by the design calculations prepared by the Contractor.

E. Provide and install anchor bolts and concrete and masonry anchors for the anchorage of equipment in accordance with the bolt sizing, minimum embedment, and spacing requirements determined by the calculations prepared by the Contractor.

END OF SECTION

DocuSign Envelope ID: D92FB7CA-DD9A-40FF-B59F-20FB66385E4F

(THIS PAGE LEFT BLANK INTENTIONALLY)

DocuSign Envelope ID: D92FB7CA-DD9A-40FF-B59F-20FB66385E4F

SECTION 01 61 50

WIND DESIGN CRITERIA

PART 1 - GENERAL

1.01 SECTION INCLUDES

A. Wind design criteria.

1.02 REFERENCES

A. 2019 Oregon Structural Specialty Code (OSSC).

B. ASCE/SEI 7-16 Minimum Design Loads for Buildings and Other Structures

1.03 DESIGN CRITERIA

A. Design in accordance with the requirements of the following:

1. Risk Category: III
2. Basic Wind Speed: V = 104 mph.
3. Wind Exposure Category: B
4. Wind Importance Factor: I = 1.0

1.04 SUBMITTALS

A. Shop Drawings and Calculations: Complete shop drawings and wind calculations.

B. Calculations shall be signed and stamped by a civil or structural Professional Engineer licensed to practice in the state where the Project is located.

PART 2 - PRODUCTS (NOT USED)

PART 3 - EXECUTION (NOT USED)

END OF SECTION

DocuSign Envelope ID: D92FB7CA-DD9A-40FF-B59F-20FB66385E4F

(THIS PAGE LEFT BLANK INTENTIONALLY)

DocuSign Envelope ID: D92FB7CA-DD9A-40FF-B59F-20FB66385E4F

SECTION 01 66 00

MATERIALS AND EQUIPMENT

PART 1 - GENERAL

1.01 SECTION INCLUDES

A. Materials, equipment and products incorporated into the work.

1.02 MATERIAL AND EQUIPMENT REQUIREMENTS

A. Specified in individual specification Sections in Divisions 02 through 46.

B. Specifications are minimum requirements and manufacturers' standard products may require modifications to meet the specified requirements.

C. Provide products and equipment with all accessories, trim, finish, safety guards and other devices needed for a complete and operational installation.

D. Products to be supplied in quantity shall be the same product from a single source to provide standardization and interchangeability.

1.03 DEFINITIONS

A. Named Products: Items identified by manufacturer's product name and model number as indicated in the manufacturer's published product data.

B. Materials: Products that are shaped, cut, worked, finished or otherwise fabricated or installed to form a part of the Work.

C. Equipment: A product with working parts, whether motorized or manually operated, that requires connections such as wiring or piping.

1.04 PACKAGING AND MARKING

A. Equipment shall be protected against damage from moisture, dust, handling, or other cause during transport from manufacturer's premises to site. Each item or package shall be marked with the number unique to the specification reference covering the item.

B. Stiffeners shall be used where necessary to maintain shapes and to give rigidity. Parts of equipment shall be delivered in assembled or subassembled units where possible.

C. Bearing housings, vents and other types of openings shall be wrapped or otherwise sealed to prevent contamination by dust and dirt.

1.05 SHIPPING AND DELIVERY

A. Plan, order, coordinate and deliver materials and equipment in accordance with the construction schedule to avoid delays and conflicts with the Work.

B. Deliver anchor bolts and bolt templates sufficiently early to permit setting and placement in structural concrete.

C. Unload products in accordance with the manufacturer's handling instructions. Promptly inspect for completeness and evidence of damage during shipment.

DocuSign Envelope ID: D92FB7CA-DD9A-40FF-B59F-20FB66385E4F

1.06 HANDLING AND STORAGE

A. During the interval between the delivery of equipment to the site and installation, all equipment, unless otherwise specified, shall be stored in an enclosed space affording protection from weather, dust and mechanical damage and providing favorable temperature, humidity and ventilation conditions to ensure against equipment deterioration. Manufacturer's recommendations shall be adhered to in addition to these requirements.

B. Equipment and materials to be located outdoors may be stored outdoors if protected against moisture condensation. Equipment shall be stored at least 6 inches above ground. Temporary power shall be provided to energize space heaters or other heat sources for control of moisture condensation. Space heaters or other heat sources shall be energized without disturbing the sealed enclosure.

C. Fabricated products, pipe and pipe appurtenances shall be handled, stored off the ground on blocking or skids. Pipes with paint, tape coatings, linings or the like shall be stored to protect the coating or lining from physical damage or other deterioration. Pipes shipped with interior bracing shall have the bracing removed only when recommended by the pipe manufacturer.

D. Store loose granular products in well-drained area on a solid surface to prevent mixing with foreign matter. Cover products that are subject to erosion or deterioration with plastic sheeting.

E. Store electrical, instrumentation and control products in a water-tight enclosure to protect against damage from moisture, dust and corrosion.

1.07 PROTECTION OF EQUIPMENT AFTER INSTALLATION

A. After installation, protect equipment from damage from, including but not limited to, dust, abrasive particles, debris and dirt generated by the placement, chipping, sandblasting, cutting, finishing and grinding of new or existing concrete, terrazzo and metal; and from the fumes, particulate matter, and splatter from welding, brazing and painting of new or existing piping and equipment.

B. As a minimum, vacuum cleaning, blowers with filters, protective shielding, and other dust suppression methods will be required at all times to adequately protect all equipment.

C. When sandblasting or when finishing concrete, all equipment that may be affected by cement dust shall be completely covered. Electrical switchgear, substations and motor load centers shall not be installed until after all concrete work and sandblasting in those areas have been completed and accepted and the ventilation systems installed.

D. During painting operations, all grease fittings and similar openings shall be covered to prevent the entry of paint.

PART 2 - PRODUCTS (NOT USED)

PART 3 - EXECUTION

3.01 INSPECTION

A. Prior to installation, inspect materials and equipment for signs of corrosion and other effects of storage. Do not install material or equipment showing such effects.

DocuSign Envelope ID: D92FB7CA-DD9A-40FF-B59F-20FB66385E4F

B. Remove damaged material from the site and expedite delivery of replacement material or equipment. Delays to the Work resulting from material or equipment damage that necessitates procurement of new products will be considered delays that are within the Contractor's control.

3.02 INSTALLATION

A. Handle, install, connect, clean and adjust products in accordance with the manufacturer's instructions.

B. Fill lubricant reservoirs and grease bearings prior to starting equipment. Use lubricants recommended by the manufacturer of the equipment.

C. Recoat painted surfaces that are damaged prior to final acceptance of the Work.

END OF SECTION

DocuSign Envelope ID: D92FB7CA-DD9A-40FF-B59F-20FB66385E4F

(THIS PAGE LEFT BLANK INTENTIONALLY)

DocuSign Envelope ID: D92FB7CA-DD9A-40FF-B59F-20FB66385E4F

SECTION 01 66 05

AMERICAN IRON AND STEEL PROGRAM COMPLIANCE

PART 1 - GENERAL

1.01 SECTION INCLUDES

A. The requirements for conformance with the American Iron and Steel (AIS) act.

1.02 AIS REQUIREMENTS

A. The Contractor is required to demonstrate products and items covered under the AIS regulations are in conformance. Contractors can demonstrate conformance using with Step Certification or Final Manufacture Certification methods

B. Step Certification: Requires each handler (supplier, fabricator, manufacturer, processor, etc.) of the iron performed. Each time a step in the manufacturer process takes place, the manufacture performed its work along with a certification of its origin.

C. Final manufacturer Certification: Requires the final manufacturer that delivers the iron of steel products in certifiers that their step in the process was domestically performed Each team a step in the manufacture process takes place, the manufacture deliver its work along with a certification of its origin.

D. AIS Certification Minimum Requirements:

1. Name of Manufacturer (Note: Should appear in the text of the letter and be on the company letter head.)

2. The location of the manufacturing facility where the project or process took place (not its headquarters.)

3. A description of the product or item being delivered.

4. A signature by a manufacturer's responsibility party.

E. Submit an AIS Certification Letter with each required item. Two Example Certification Letter are appended to this section.

PART 2 - PRODUCTS (NOT USED)

PART 3 - EXECUTION (NOT USED)

END OF SECTION

DocuSign Envelope ID: D92FB7CA-DD9A-40FF-B59F-20FB66385E4F

SAMPLE AIS CERTIFICATION LETTERS

The following information is provided as a sample letter of **step** certification for AIS compliance. Documentation must be provided on company letterhead.

<<Date>>

<<Company Name>>
<<Address>>
<<City State Zip>>

SUBJECT:

I, (company representative), certify that the (melting, bending, coating, galvanizing, cutting, etc.) process for (manufacturing or fabricating) the following products and/or materials shipped or provided for the subject project is in full compliance with the American Iron and Steel requirement as mandated in EPA's State Revolving Fund Programs.

Item, Products and/or Materials:

1. Xxxx
2. Xxxx
3. Xxxx

Such process took place at the following location:

_____

If any of the above compliance statements change while providing material to this project, we will immediately notify the prime contractor and the engineer.

Sincerely,
<<Company Name>>

Name - *Signed by company representative*

Title

DocuSign Envelope ID: D92FB7CA-DD9A-40FF-B59F-20FB66385E4F

The following information is provided as a sample letter of certification for AIS compliance. Documentation must be provided on company letterhead.

<<Date>>

<<Company Name>>
<<Address>>
<<City State Zip>>

SUBJECT:

I, (company representative), certify that the following products and/or materials shipped/provided to the subject project are in full compliance with the American Iron and Steel requirement as mandated in EPA's State Revolving Fund Programs.

Item, Products and/or Materials:

1. Xxxx
2. Xxxx
3. Xxxx

Such process took place at the following location:

_____

If any of the above compliance statements change while providing material to this project, we will immediately notify the prime contractor and the engineer.

Sincerely,
<<Company Name>>

Name - *Signed by company representative*

Title

DocuSign Envelope ID: D92FB7CA-DD9A-40FF-B59F-20FB66385E4F

(THIS PAGE LEFT BLANK INTENTIONALLY)

DocuSign Envelope ID: D92FB7CA-DD9A-40FF-B59F-20FB66385E4F

SECTION 01 71 13

MOBILIZATION AND DEMOBILIZATION

PART 1 - GENERAL

1.01 MOBILIZATION

A. Mobilization shall consist of preparatory work and operations, including, but not limited to, those necessary for the movement of personnel, equipment, supplies, and incidentals to the site; for the establishment of all facilities necessary for work on the project; and for all other work and operations which must be performed, or costs incurred prior to beginning work, on the various items on the project site.

B. Mobilization shall also include the construction of temporary access ways; temporary fencing; and the necessary preparatory work required to allow for the safe and stable movement of all vehicles that are required to construct the improvements as shown.

1.02 DEMOBILIZATION

A. Demobilization shall consist of work and operations necessary to disband all mobilized items and clean up the site. The removal of all temporary access ways, signs, temporary fencing, and temporary facilities or works and the restoration of surfaces to an equal or better than existing condition shall also be included as part of demobilization.

PART 2 - PRODUCTS (NOT USED)

PART 3 - EXECUTION (NOT USED)

END OF SECTION

DocuSign Envelope ID: D92FB7CA-DD9A-40FF-B59F-20FB66385E4F

(THIS PAGE LEFT BLANK INTENTIONALLY)

DocuSign Envelope ID: D92FB7CA-DD9A-40FF-B59F-20FB66385E4F

SECTION 01 72 50

PROTECTION OF EXISTING FACILITIES

PART 1 - GENERAL

1.01 GENERAL

A. Protect all existing utilities and improvements not designated for removal and shall restore damaged or temporarily relocated utilities and improvements to a condition equal to or better than prior to such damage or temporary relocation, all in accordance with the Contract Documents.

1.02 REFERENCED SECTIONS

A. The following Sections are referenced in this Section

1. Section 00 70 00 -General Conditions
2. Section 01 57 19 – Environmental Controls
3. Section 01 12 16 – Work Sequence and Constraints

1.03 CONNECTIONS

A. Connections to existing facilities, and all associated Work, shall be in accordance with the requirements of Section 00 70 00, 5.05, Underground Facilities, and this Section, except that in the case of conflict, Section 00 70 00, 5.05, Underground Facilities, shall take precedence.

B. Unless otherwise specified or indicated, Contractor shall make all necessary connections to existing facilities, including structures, drain lines, and utilities such as water, sewer, gas, telephone, and electric. In each case, Contractor shall receive permission from Owner or the owning utility prior to undertaking connections. Contractor shall protect facilities against deleterious substances and damage.

C. Connections to existing facilities that are in service shall be thoroughly planned in advance, and all required equipment, materials, and labor shall be on hand at the time of undertaking the connections. Work shall proceed continuously (around the clock) if necessary to complete connections in the minimum time. Operation of valves or other appurtenances on existing utilities, when required, shall be by or under the direct supervision of the owning utility.

D. Any work which requires a system outage shall be coordinated and a request made, including contingency plans, to the owning utility at least two (2) weeks in advance.

1.04 RESTORATION OF PAVEMENT

A. General

1. All paved areas including asphaltic concrete berms cut or damaged during construction shall be replaced with similar materials of equal thickness to match the existing adjacent undisturbed areas, except where specific resurfacing requirements have been called for in the Contract Documents or in the requirements of the agency issuing the permit.

DocuSign Envelope ID: D92FB7CA-DD9A-40FF-B59F-20FB66385E4F

2. The pavement restoration requirement to match existing sections shall apply to all components of existing sections, including sub-base, base, and pavement.

3. Temporary and permanent pavement shall conform to the requirements of the affected pavement owner. Pavements which are subject to partial removal shall be neatly saw cut in straight lines.

B. Temporary Resurfacing

1. Wherever required by the public authorities having jurisdiction, the Contractor shall place temporary surfacing promptly after backfilling and shall maintain such surfacing for the period of time fixed by said authorities before proceeding with the final restoration of improvements.

C. Permanent Resurfacing

1. In order to obtain a satisfactory junction with adjacent surfaces, the Contractor shall saw cut back and trim the edge so as to provide a clean, sound, vertical joint before permanent replacement of an excavated or damaged portion of pavement.

2. Damaged edges of pavement along excavations and elsewhere shall be trimmed back by saw cutting in straight lines.

3. All pavement restoration and other facilities restoration shall be constructed to finish grades compatible with adjacent undisturbed pavement.

1.05 EXISTING UTILITIES

A. General:

1. Perform the Work in accordance with the requirements of Section 00 70 00, Article-5.05, Underground Facilities.

B. Protect existing utilities and other improvements which may be impaired during construction operations, regardless of whether or not the Utilities are indicated on the Drawings. Take all possible precautions for the protection of unforeseen utility lines to provide for uninterrupted service and to provide such special protection as may be necessary.

C. Except where the Drawings indicate utilities have been field located during design or certain Utility locations shall be exposed as part of the Work, the Contractor shall be responsible for exploratory excavations as it deems necessary to determine the exact locations and depths of Utilities which may interfere with its work. Perform all exploratory excavations as soon as practicable after Notice to Proceed and, in any event, sufficient time in advance of fabrication and/or construction to avoid potential delays to the construction progress. When such exploratory excavations show the utility location as shown on the Drawings to be in error, notify the Engineer.

D. The number of exploratory excavations required shall be that number which is sufficient to determine the alignment and grade of the Utility.

E. Utilities to be Removed

1. Where the proper completion of the Work requires the temporary or permanent removal and/or relocation of an existing Utility or other improvement which is

DocuSign Envelope ID: D92FB7CA-DD9A-40FF-B59F-20FB66385E4F

indicated, remove and, without unnecessary delay, temporarily replace or relocate such Utility or improvement in a manner satisfactory to the Engineer and the owner of the facility.

2. In all cases of temporary removal or relocation, restoration to the former location shall be accomplished in a manner that will restore or replace the Utility or improvement as nearly as possible to its former locations and to as good or better condition than found prior to removal.

F. Approval of Repairs

1. All repairs to a damaged Utility or improvement are subject to inspection and approval by an authorized representative of the Utility or improvement owner before being concealed by backfill or other work.

1.06 TREES OR SHRUBS WITHIN PROJECT LIMITS

A. General: Protection of existing trees and shrubs shall be in accordance with the requirements of this Section.

B. Except where trees or shrubs are indicated to be removed, exercise all necessary precautions so as not to damage or destroy any trees or shrubs, including those lying within project limits, and shall not trim or remove any trees unless such trees have been approved for trimming or removal by the jurisdictional agency or Owner. Existing trees and shrubs which are damaged during construction shall be trimmed or replaced by the Contractor or a certified tree company under permit from the jurisdictional agency and/or the Owner. Tree trimming and replacement shall be accomplished in accordance with the following paragraphs.

C. Trimming

1. Symmetry of the tree shall be preserved; no stubs or splits or torn branches left; clean cuts shall be made close to the trunk or large branch.

2. Spikes shall not be used for climbing live trees.

3. Cuts over 1-1/2 inches in diameter shall be coated with a tree paint product that is waterproof, adhesive, and elastic, and free from kerosenes, coal tar, creosote, or other material injurious to the life of the tree.

D. Replacement

1. Immediately notify the jurisdictional agency and/or the Owner if any tree or shrub is damaged by the Contractor's operations.

2. If, in the opinion of said agency or the Owner, the damage is such that replacement is necessary, replace the tree or shrub at no additional cost to Owner.

3. The tree or shrub shall be of a like size and variety as the one damaged, or, if of a smaller size, the Contractor shall pay to the owner of said tree a compensatory payment acceptable to the tree or shrub owner, subject to the approval of the jurisdictional agency or Owner.

4. The size of the tree or shrub shall be not less than 1-inch diameter nor less than six (6) feet in height.

DocuSign Envelope ID: D92FB7CA-DD9A-40FF-B59F-20FB66385E4F

1.07 NOTIFICATION BY THE CONTRACTOR

A. Prior to excavation in the vicinity of any existing underground facilities, including water, sewer, storm drain, gas, petroleum products, or other pipelines; buried electric power, communications, or television cables; notify the respective authorities representing the owners or agencies responsible for such facilities not less than three (3) days nor more than seven (7) days prior to excavation so that a representative of said owners or agencies can be present during such work if they so desire.

PART 2 - PRODUCTS (NOT USED)

PART 3 - EXECUTION (NOT USED)

END OF SECTION

DocuSign Envelope ID: D92FB7CA-DD9A-40FF-B59F-20FB66385E4F

SECTION 01 73 50

CUTTING AND PATCHING

PART 1 - GENERAL

1.01 SECTION INCLUDES

A. Cutting and patching existing and new construction.

1.02 REFERENCED SECTIONS

A. The following Section is referenced in this Section

1. Section 01 33 00 – Submittals

1.03 GENERAL REQUIREMENTS

A. Perform Work in compliance with OSHA Standards and other standards as applicable.

B. Cutting and patching shall be completed to the satisfaction of the Engineer.

1.04 SUBMITTALS

A. Submit in accordance with Section 01 33 00.

B. Cutting and Patching Plan

1. Submit details of proposed construction before cutting and patching construction commences affecting:

a. Work of Owner or of others.

b. Structural integrity of element of Project.

2. Cutting and Patching Plan shall include the following for Engineer's approval:

a. Identification of Work.

b. Description of affected construction.

c. Necessity for cutting, patching, alteration, or excavation.

d. Description of proposed construction.

e. Scope of cutting, patching, alteration, or excavation.

PART 2 - PRODUCTS

2.01 MATERIALS

A. Comply with specifications and standards for products involved.

PART 3 - EXECUTION

3.01 PREPARATION

A. Provide adequate temporary support as necessary to ensure structural integrity of affected portion of Work.

B. Provide devices and methods to protect other portions of Project from damage and persons from injury.

DocuSign Envelope ID: D92FB7CA-DD9A-40FF-B59F-20FB66385E4F

C. Provide protection from elements for that portion of Project which may be exposed by cutting and patching, and maintain excavations free from water.

3.02 CUTTING AND PATCHING

A. Cut, Fit, and Patch when required to

1. Make its several parts fit together properly.
2. Remove and replace construction not conforming to Contract Documents.
3. Remove samples of installed construction as specified for testing.
4. Provide routine penetrations of nonstructural surfaces for installation of piping and electrical conduit.

B. Execute cutting and demolition by methods which will prevent damage and will provide proper surfaces to receive installation of repairs.

C. Openings in Existing Concrete and Masonry

1. Create openings by:
   a. Saw cutting completely through concrete or masonry, or
   b. Scoring edges of opening with saw to at least 1 inch depth on both surfaces (when accessible) and removing concrete or masonry by chipping.
2. Do not allow saw cuts to extend beyond limits of opening.
3. Make corners square and true by combination of core drilling and grinding or chipping.
4. Prevent debris from falling into adjacent tanks or channels in service or from damaging existing equipment and other facilities.

D. Sizing of Openings in Existing Concrete or Masonry

1. Make openings sufficiently large to permit final alignment of pipe and fittings without deflections.
2. Allow adequate space for packing around pipes and conduit to ensure watertightness.

E. Grouting Pipes in Place

1. Sandblast concrete surfaces and thoroughly clean sand and other foreign material from surfaces prior to placing grout.
2. Grout pipes, sleeves, castings, and conduits in place by pouring grout under a head of at least 4 inches. Vibrate grout into place. Completely fill the spaces occupied by pipes, sleeves, castings, and conduits.
3. Water cure the grout.

F. Connections to Existing Pipes

1. Cut existing pipe square.
2. Properly prepare the ends for the connection indicated on the Drawings.

DocuSign Envelope ID: D92FB7CA-DD9A-40FF-B59F-20FB66385E4F

3. Repair any damage to existing lining and coating.

G. Rehabilitate all areas affected by removal of existing equipment, equipment pads and bases, piping, supports, electrical panels, electric devices, and conduits such that little or no evidence of the previous installation remains.

1. Fill areas in existing floors, walls, and ceilings from removed piping, conduit and fasteners with non-shrink grout and finish smooth.

2. Remove concrete bases for equipment and supports by:

a. Saw cutting clean, straight lines with a depth equal to the concrete cover over reinforcement minus 1/2 inch below finished surface. Do not cut existing reinforcement on floors.

b. Chip concrete within scored lines and cut exposed reinforcing steel and anchor bolts.

c. Patch with non-shrink grout to match adjacent grade and finish.

1) Terminate abandoned piping and conduits with blind flanges, caps, or plugs.

H. Treat Existing Concrete Reinforcement as follows:

1. Where existing reinforcement is to remain, protect, clean, and extend into new concrete.

2. Where existing reinforcement is not to be retained, cut off as follows:

a. Where new concrete joins existing concrete at the removal line, cut reinforcement flush with concrete surface at the removal line.

b. Where concrete surface at the removal line is the finished surface, cut reinforcement 2 inches below the surface, paint ends with epoxy, and patch holes with dry pack mortar.

END OF SECTION

DocuSign Envelope ID: D92FB7CA-DD9A-40FF-B59F-20FB66385E4F

(THIS PAGE LEFT BLANK INTENTIONALLY)

DocuSign Envelope ID: D92FB7CA-DD9A-40FF-B59F-20FB66385E4F

SECTION 01 77 00

CONTRACT CLOSEOUT PROCEDURES

PART 1 - GENERAL

1.01 SECTION INCLUDES

A. Administrative and procedural requirements for contract closeout.

1.02 REFERENCED SECTIONS

A. The following Sections are referenced in this Section

1. Section 00 70 00 – Standard General Conditions of the Construction Contract
2. Section 01 78 23 – Operation and Maintenance Information
3. Section 01 78 39 – Project Record Documents

1.03 FINAL CLEANING

A. Immediately prior to submittal of a request for inspection for Substantial Completion, clean the project site and make ready for Owner's use and occupancy.

B. Employ experienced workers or professional cleaners for final cleaning.

C. Complete the following cleaning operations:

1. Clean the project site, yard and grounds which were disturbed by construction activities. Remove rubbish, waste material, litter, and other foreign material.
2. Sweep paved areas, remove oil stains, grease, dust, and dirt.
3. Remove tools, construction equipment, machinery, storage sheds, temporary fences, and surplus material.
4. Broom clean sidewalks and concrete floors.
5. Vacuum carpets, spot clean or if necessary, shampoo to remove visible soil or stains.
6. Clean glass in doors and windows, remove glazing compounds, replace chipped and broken glass, clean door and window frames.
7. Patch, touch up and repair marred surfaces and finishes. Replace finishes and surfaces that cannot be satisfactorily repaired or restored.
8. Wipe surfaces of mechanical and electrical equipment, remove excess lubrication, paint splatter and mortar droppings.
9. Clean plumbing fixtures and mirrors.
10. Clean light fixtures, lamps and bulbs. Replace burned-out bulbs and defective or noisy starters in fluorescent and mercury vapor fixtures.

DocuSign Envelope ID: D92FB7CA-DD9A-40FF-B59F-20FB66385E4F

1.04 SUBSTANTIAL COMPLETION

A. General:

1. Comply with procedural requirements for Substantial Completion as specified in Section 00 70 00.

B. Complete final cleaning operations before requesting inspection for Substantial Completion.

C. Prior to requesting inspection for Substantial Completion, complete and submit the following:

1. List of items to be completed or corrected (punch list). Organize list by facility, space, system and piece of equipment.

2. Specific warranties, bonds, maintenance service agreements, final certifications, and similar documents.

3. Delivery of spare parts, special tools, extra materials, and similar items to designated locations.

4. Make final changeover of permanent locks and deliver keys to Owner.

D. Inspection for Substantial Completion:

1. Engineer, Owner and Contractor shall jointly walk through and inspect the project site to determine whether the Work is satisfactory and Substantially Complete.

2. The Contractor's punch list will be reviewed, and additional items identified during the inspection requiring corrective actions will be added to the list as determined by the inspection.

3. Once Substantial Completion has been achieved, Engineer will prepare a Certificate of Substantial Completion.

1.05 FINAL COMPLETION

A. Final Completion Submittals:

1. Prior to submitting final Application for Payment, complete and submit the following:

a. Project Record Documents. Refer to Section 01 78 39.

b. Guaranty and Warranties.

c. Operation and Maintenance Information. Refer to Section 01 78 23.

d. Punch List with all corrective actions completed and ready for Final Inspection.

e. Releases from Agreements with property owners or public agencies.

f. Releases or Waivers of Liens and Claims.

g. Evidence of final, continuing insurance coverage complying with insurance requirements.

h. Consent of Surety to Final Payment.

DocuSign Envelope ID: D92FB7CA-DD9A-40FF-B59F-20FB66385E4F

B. Final Inspection:

1. Submit written request for final inspection for Project Acceptance.

2. Engineer will either proceed with the inspection or advise Contractor of unfulfilled requirements.

1.06 FINAL APPLICATION FOR PAYMENT

A. Following a satisfactory Final Inspection , submit the final Application for Payment in accordance with the procedures and requirements specified in Section 00 70 00

PART 2 - PRODUCTS (NOT USED)

PART 3 - EXECUTION (NOT USED)

END OF SECTION

DocuSign Envelope ID: D92FB7CA-DD9A-40FF-B59F-20FB66385E4F

(THIS PAGE LEFT BLANK INTENTIONALLY)

DocuSign Envelope ID: D92FB7CA-DD9A-40FF-B59F-20FB66385E4F

SECTION 01 78 23

OPERATION AND MAINTENANCE DATA

PART 1 - GENERAL

1.01 SECTION INCLUDES

A. Requirements for Operation and Maintenance (O&M) manuals and related equipment data for incorporation into the Owner's asset management system.

1.02 REFERENCED SECTIONS

A. The following Sections are referenced in this Section

1. Section 01 33 00 – Submittals
2. Section 01 99 00 – Reference Forms
3. Section 01 81 00 – Equipment and System Testing

1.03 SUBMITTALS

A. Comply with Section 01 33 00.

B. Provide the following completed forms with each submittal (See Section 01 99 00)

1. Operational and Maintenance Information Transmittal Form
2. Equipment Record Form A and B
3. Asset Management Data Field Form
4. Spare Parts Record Form
5. Spare Parts Release Form

C. The Equipment Records Form and Asset Management Field Data Form shall be the initial pages of the manual.

D. Sixty days prior to the testing and startup of any equipment, as specified in Section 01 81 00, Equipment and System Testing, submit one electronic copy of the Preliminary Operation and Maintenance manuals. Identify copies as "Preliminary."

E. Owner will complete review of preliminary O&M manuals and deliver reviewcomments within 30 days of receipt.

F. Provide four hard copies and two electronic copies of the final O&M Manual.

1.04 OPERATION AND MAINTENANCE MANUAL

A. Operation and Maintenance Manuals shall contain all the information needed to operate, maintain and repair all systems and equipment and material provided in theProject. Group equipment and components by system, organized around unit processes shown in the process and instrumentation diagrams (P&IDs) and the control strategies. Match testing, training and commissioning systems as much as possible. The information provided shall include, but not be limited to, the following:

1. General: The names, addresses, and telephone numbers of the manufacturer, the nearest manufacturer's representative, and the manufacturer's nearest supplier

DocuSign Envelope ID: D92FB7CA-DD9A-40FF-B59F-20FB66385E4F

of equipment and parts. Include the manufacturer's web site information. Provide performance curves for allpumps.

2. Operating Instructions:

   a. Safety Precautions: List personnel hazards for equipment and listsafety precautions for all operating conditions.

   b. Operator Prestart: Provide requirements to set up and prepare each system for use.

   c. Start-up, Shutdown, and Post-Shutdown Procedures: Provide acontrol sequence for each of these operations.

   d. Normal Operations: Provide control diagrams; explain operation and control of systems and specific equipment. As applicable, provide baseline vibration, temperature, pressure, etc. readings.

   e. Emergency Operations: Provide emergency procedures for equipment malfunctions to permit a short period of continued operation or to shut down the equipment to prevent further damage. Include shutdown instructions for fire, explosion, spills, or other foreseeable contingencies. Provide guidance on emergency operations of all utility systems including valve locations and portionsof systems controlled.

   f. Service Requirements: Provide instructions for services to be performed by the operator such as lubrication, adjustments, andinspection.

   g. Environmental Conditions: Provide a list of environmental conditions (temperature, humidity, and other relevant data) which are best suited for each product and describe conditions under which productshould not be allowed to run.

3. Preventive Maintenance:

   a. Lubrication Data: Provide a table showing recommended lubricants for specific temperature ranges and applications; provide charts with a schematic diagram showing lubrication points, recommended lubricants, and capacities; provide a lubrication schedule showing service interval frequency.

   b. Provide manufacturer's preventative maintenance schedule for routine inspections, tests, and adjustments required to ensure proper and economical operation and minimize repairs. Provide manufacturer's projection of preventive maintenance man-hours, by type of craft, on a daily, weekly, monthly, and annual basis.

   c. In addition, provide a customized maintenance schedule to be input into the Owner's asset management system using Maintenance Schedule (Section 01.99.00).The customized maintenance schedule shall include all preventive maintenance tasks identified in the preventive maintenance schedule specified above, listing tasks to be performed at specific calendar and usage intervals.

4. Corrective Maintenance:

   a. Troubleshooting Guides and Diagnostic Techniques: Provide step-by-step procedures to promptly isolate the cause of typical malfunctions.

DocuSign Envelope ID: D92FB7CA-DD9A-40FF-B59F-20FB66385E4F

Describe clearly why the checkout is performed and what conditions are to be sought. Identify tests or inspections and test equipment required to determine whether parts and equipment may be reused or require replacement.

b. Wiring and Control Diagrams: Provide point-to-point drawings of wiring and control circuits including factory-field interfaces. Provide acomplete and accurate depiction of the actual job-specific wiring and control work. On diagrams, number electrical and electronic wiring terminals identically to actual installation.

c. Maintenance and Repair Procedures: Provide instructions and list tools required to restore equipment to proper operational condition.

d. Removal and Replacement Instructions: Provide step-by-step procedures and list required tools and supplies for removal, replacement, disassembly, and assembly of components, subcomponents, and accessories. Provide tolerances, dimensions, settings, and adjustments required. Include a combination of text and illustrations.

e. Spare Parts and Supply Lists: Provide lists of spare parts and supplies required for maintenance and repair to ensure continued service or operation without unreasonably delays using Spare Parts Release Form (Section 01.99.00). Identify spare parts and supplies that require a long lead time.Provide list prices.

f. Corrective Maintenance: Provide manufacturer's projection of corrective maintenance man-hours by type of craft. Separately identify and tabulate corrective maintenance requiring equipment manufacturer’s participation.

5. Appendices:

a. Parts Identification: Identify each component, subcomponent, and accessory subject to replacement. Include special hardware requirements, such as requirement to use high-strength bolts and nuts. Identify parts by make, model, serial number, and source of supply to allow reordering without further identification. Provide clearand legible illustrations, drawings, and exploded views to enable easyidentification. When illustrations omit the part numbers and description, cross reference the illustrated part to the listed part. Group parts by components, subcomponents, and accessories.

b. Training Requirements: Provide manufacturer’s information for usein Owner training.

c. Testing Equipment and Special Tool Information: Provide informationon required test equipment; provide information on special tools needed for the operation, maintenance, and repair.

B. Deliver electronic copies on CD, USB flash drive or upload into the electronic construction document control system.

1. Electronic O&M manuals shall be in searchable Adobe Acrobat pdf format.

2. Where scanned pages are used, each scanned page shall be provided with a bookmark and identified in the index. In addition, annotate each scanned page

DocuSign Envelope ID: D92FB7CA-DD9A-40FF-B59F-20FB66385E4F

identifying the content. For example, for a scan of a Special Warranty, insert an annotation in the file stating "Special Warranty Documentation, Page 1."

3. Index each manual with hyperlinks and bookmarks to each section.
4. Consistently orient all diagrams, drawings, pictures and illustrations.
5. Where Revit 3D drawing equipment blocks have been provided by equipment manufacturers, include equipment blocks as part of the electronic O&M manuals.

PART 2 - NOT USED

PART 3 - NOT USED

END OF SECTION

DocuSign Envelope ID: D92FB7CA-DD9A-40FF-B59F-20FB66385E4F

SECTION 01 78 36

WARRANTIES AND BONDS

PART 1 - GENERAL

1.01 GUARANTEE OF WORK

A. The Contractor hereby agrees to make, at its own expense, all repairs or replacements necessitated by defects in materials or workmanship, supplied under terms of this Contract, and pay for any damage to other works resulting from such defects, which becomes evident within one (1) year after the date of Project Acceptance or within such longer period of time as may be prescribed by law or by the terms of any applicable special guarantee required by the Contract Documents. The Contractor further assumes responsibility for a similar guarantee for all work and materials provided by subcontractors or manufacturers of packaged equipment components. The Contractor also agrees to indemnify, defend, and hold the City of Sweet Home harmless from liability of any kind arising from damage due to said defects.

B. The Contractor shall execute and submit a completed Warranty Form in the format as located in Section 01 99 00, and any portion of the Work possessed in accordance with the General Provisions. The Warranty Form shall be submitted prior to the Substantial Completion date or the final acceptance of the project or within five (5) days of the occupancy or use of a portion of the Work, whichever is applicable.

C. The Contractor shall, upon the receipt of notice in writing from the Owner, promptly make all repairs arising out of defective materials, workmanship, or equipment. The Owner is hereby authorized to make such repairs, and the Contractor and its Surety shall be liable for the cost thereof, if ten (10) days after giving of such notice to the Contractor, the Contractor has failed to make or undertake the repairs with due diligence. In case of emergency, where in the opinion of the Owner delay could cause serious loss or damage, repairs may be made without notice being sent to the Contractor, and the expense in connection therewith shall be charged to the Contractor, and its Surety shall be liable for the cost thereof.

D. Prior to the expiration of the Warranty period, the Owner reserves the right to hold a meeting and require the attendance of the Contractor. The purpose of the meeting is to review warranties, bonds and maintenance requirements and determine required repair or replacement of defective items.

E. For the purpose of this paragraph, acceptance of the Work or a portion of the Work by the Owner, shall not extinguish any covenant or agreement on the part of the Contractor to be performed or fulfilled under this Contract which has not, in fact, been performed or fulfilled at the time of such acceptance. All covenants and agreements shall continue to be binding on the Contractor until they have been fulfilled.

F. The Owner and the Contractor agree that warranty on the parts of the work possessed and used by the Owner in accordance with these Specifications, shall commence on the date that the Owner takes possession of such work and so notifies the Contractor in writing. The Owner and the Contractor further agree that such possession, and use of the

DocuSign Envelope ID: D92FB7CA-DD9A-40FF-B59F-20FB66385E4F

work shall not be deemed as Substantial Completion or acceptance of any other part of the Work.

G. If, after installation, the operation or use of the materials or equipment furnished under this Contract proves to be unsatisfactory to the Engineer or Owner, the Owner shall have the right to operate and use such materials or equipment until it can, without damage to the Owner, be taken out of service for correction or replacement. Such period of use of the defective materials or equipment pending correction or replacement shall in no way decrease the guarantee period required for the acceptable corrected or replaced items of materials or equipment.

H. Nothing in this Section shall be construed to limit, relieve or release the Contractor's, subcontractor's and equipment supplier's liability to the Owner for damages sustained as the result of latent defects in the equipment furnished caused by the negligence of the supplier's agents, employees or subcontractors. Stated in another manner, the warranty contained in this Section shall not amount to nor shall it be deemed to be a waiver by the Owner of any rights or remedies (or time limits in which to enforce such rights or remedies) it may have against the supplier of the equipment to be furnished under these Specifications for defective workmanship or defective materials under the laws of this State pertaining to acts of negligence.

END OF SECTION

DocuSign Envelope ID: D92FB7CA-DD9A-40FF-B59F-20FB66385E4F

SECTION 01 78 39

PROJECT RECORD DOCUMENTS

PART 1 - GENERAL

1.01 SUMMARY

A. This Section details the Project Record requirements specified Section 00 70 00, which consists of C-700, Standard General Conditions of the Construction Contract.

B. This project will utilize 3D models and other electronic documentation at all stages of design and construction. To that end, this Section outlines the requirements for maintaining the 3D models and other electronic documentation.

C. The Project Record to be maintained by the Contractor and delivered to the Owner prior to Final Completion includes the following:

1. Project Record Drawings
2. CAD Drawings, where specified in the Construction Documents
3. Project Record 3D Models

D. Prior to the start of construction, the Contractor will be provided with electronic copies of the Construction Documents and supporting information. These electronic copies will include 3D models, the electronic drawing files used to develop the 3D models, 2D drawings, and text files. The models, drawings, and text files will be in a file format acceptable to all parties. The file formats may include Navisworks .nwd files, AutoCAD .dwg files, AutoCad P&ID .dwg files, Autodesk Revit .rvt files, Microsoft Word.docx files, Microsoft Access .accdb files, Microsoft Excel. xlsx files, and Adobe .pdf files. The 3D files may also be referred to as BIM files.

E. Electronic versions of the Construction Documents and other information are made available to the Contractor for informational purposes only. Neither the Owner nor any other party makes any warranties whatsoever with respect to the electronic copies (and hereby disclaim any implied warranties, including any implied warranty of accuracy). Contractor's use of this information shall be at the Contractor's sole risk. The Contractor shall check the electronic information provided for consistency with the Construction Documents.

F. The Drawings were prepared from a combination of 2D representations of the 3D models (extracted directly from the 3D models) and information that exists only in 2D. In the case of discrepancies between the Construction Documents and the 3D model, the Construction Documents govern.

1.02 REFERENCED SECTIONS

A. The following Sections are referenced in this Section

1. Section 00 70 00 – Standard General Conditions of the Construction Contract
2. Section 01 31 26 – Electronic Construction Document Control System

DocuSign Envelope ID: D92FB7CA-DD9A-40FF-B59F-20FB66385E4F

1.03 PROJECT RECORD

A. General:

1. Protect and backup record documents from deterioration and loss in a secure fire-resistant location. Record documents will be reviewed by the Owner on a monthly basis during construction.

B. Electronic Project Record Drawings:

1. Maintain an electronic version of the Contract Drawings and Shop Drawings in Adobe .pdf format. Use the electronic record drawings to show the actual installation where the installation varies substantively from the Work, as originally shown. Record changes on whichever drawing can show conditions fully and accurately. Where shop drawings are used, insert a hyperlink to the shop drawing at the corresponding location on the Contract Drawings. Give particular attention to concealed elements that would be difficult to measure and record at a later date.

2. Maintain electronic record drawings to distinguish separate categories of the Work. Good basic drafting practice must be applied.

3. Record new information that was not shown on Contract Documents or Shop Drawings. Record information concurrently with construction progress. No work shall be concealed until the required information is recorded. Be cautioned against ordering concrete until items concealed by the concrete are recorded on the Project Record Drawings. Should concrete be placed without recording the concealed items, payment may delayed or withheld.

4. Show addenda items, Change Orders, and Request for Information (RFI) responses by their number and date the revisions with a “cloud” around the revision, with hyperlinks to the documents inserted into the corresponding location on the Contract Drawings.

5. Keep accurate measurements of underground services and utilities, referenced to the building, or if approved by Owner, the building or other permanent construction. Note changes of directions and locations, by dimensions and elevations, as utilities are actually installed.

6. Show mechanical dampers, valves, reheat boxes, cleanouts, and other items that require maintenance.

7. Show location of construction-concealed internal utilities and appurtenances referenced to visible and accessible features of the structure.

8. Record accurate locations of piping, valves, traps, dampers, duct work, equipment, and the like.

9. The following actual new construction and exposed existing items shall be recorded on the Project Record Drawings:

a. Depth of foundation elements in relation to ground elevation.

b. Horizontal and vertical locations of underground utilities and appurtenances, referenced to permanent surface improvements. Minimum accuracy requirements are specified in the following table.

DocuSign Envelope ID: D92FB7CA-DD9A-40FF-B59F-20FB66385E4F

Description	Horizontal Location	Vertical Location (elevation)	Notes
Pressurized piping	CL +/- 1 ft	CL +/- 0.01 ft	Includes water and process lines except irrigation systems
Gravity pipes: floor, process, sewer, and storm.	CL +/- 1 ft	I.E. +/- 0.01 ft	Recalculate slope if shown
Conduits, cable and duct banks at beginning and end of straight runs	CL +/- 3 inches	Nominal depth of cover to final grade or T.O.C. elevations +/-0.5 ft	Show conduit cross-sections, encasement width and height for encased duct banks
CL = centerline	I.E. = invert elevation	T.O.C. = top of concrete	

c. The actual arrangement and routing of embedded conduit and piping relative to visible structural items. Conduit and piping shall be dimensioned off of walls, columns, or other similar features.

d. Precise Survey Measurements:

1) Taken on all final locations of buried or concealed items.

2) Coordinates and elevations of starting and ending points and at directional changes.

3) List survey coordinates on the Project Record Drawings.

4) Complete survey and recording before any burial by soil, concrete, or other materials.

10. Locate all covered structures including thrust blocks, valves, piping junction, and duct banks.

11. Indicate field changes of dimension and detail.

12. “X-out” conditions not constructed and appropriately annotate "not constructed" to convey the actual "as constructed" condition.

13. Organize electronic record drawings in manageable sets, with cover sheets showing suitable titles, dates and other appropriate identification.

14. Include links to signed off permits including: plumbing, electrical, and building.

C. CAD (Computer Aided Drafting) Drawings: The Contractor shall comply with the following drawing standards when preparing CAD Drawings specified in the Construction Documents

1. All drawings shall be full size documents on standard sheet sizes (22x34), or as otherwise indicated in the Construction Documents.

2. Cover sheet shall contain complete index of sheets.

3. Symbols shown must be symbols used in the construction documents.

DocuSign Envelope ID: D92FB7CA-DD9A-40FF-B59F-20FB66385E4F

4. Standard drafting practice shall be:
   a. Title block
      1) All sheets shall have a title block.
      2) Title block information is to be on the bottom of the sheet.
      3) Title blocks shall include the following information:
         a) Date
         b) Owner's Project Name
         c) Owner's Project Number
         d) Sheet name
         e) Sheet number
         f) Contractor company name
         g) Architect or Engineer's Seal
         h) A Key Plan
   b. Layering Format:
      1) Use layering conventions used for the Construction Documents. The CAD Standards Design Guidelines used for preparation of the Construction Documents will be provided to the Contractor for reference.
   c. Scale and Units:
      1) All objects are to be drawn at full scale for the assigned unit of measure.
      2) All drawings are to have a unit of measure assigned and not set to "unitless."
   d. External references and image file usage in CAD Documents:
      1) External references are not allowed.
      2) All external references are to be bound using the Bind option (instead of the insert option).
   e. Area of Work:
      1) CAD drawings shall include a boundary to define the Area of Work encompassing all areas, and only those areas where work is performed.
5. Submittal: Provide a CDROM Disk for all CAD Drawing submittals required by the Contract Documents in AutoCAD 2011 .DWG format and Adobe .pdf format. Also provide two hard copies on 11x17 bond paper.
   a. No menus, custom user interface (cui) files or arx applications are allowed.
   b. Each CAD drawing shall represent a single printed sheet where the file naming convention follows that used for the Construction Documents. All CAD drawings for all disciplines in a submittal are to be in a single folder. All supporting files (font file, line types, plot configurations, plot style tables, etc.) are to be in a sub folder. If files are attached, include them in the same folder as the CAD files.

DocuSign Envelope ID: D92FB7CA-DD9A-40FF-B59F-20FB66385E4F

D. Three Dimensional (3D) Construction Models:

1. Prior to closeout of a design package, provide 3D models developed during construction reflecting as-constructed conditions to the Owner in a format compatible with .dwg, .rvt, and nwd. formats, or other agreed upon formats. The models shall be created in 1:1 scale utilizing standard architectural US units of measure (feet and inches). Interoperability shall be defined as allowing the exchange and management of electronic data with the Owner's asset management system without loss of geometric information, such that individuals and systems are able to identify, access, and integrate information across multiple systems.

2. Maintain 3D construction models over the course of construction to show the actual installation information.

   a. Make changes to the 3D models (BIM files) incorporating notes and comments as necessary to communicate changes to the Work.

   b. Do not change the origin point or general extent of the 3D models.

   c. Make changes to 3D models to show actual installed equipment with dimensions and data provided in submittals or Shop Drawings.

3. Run regular clash detection reports to verify that models accurately reflect as-constructed conditions.

4. The level of detail provided in the Project Record 3D Models shall be at least that provided in the design models. When additional detail beyond what is included in the design models is developed the Contractor as part of construction models, that detail shall be included in the 3D construction models.

E. Interim Project Record Availability and Reviews:

1. Project Record Drawings shall be reviewed and approved by the Owner monthly as a condition of approval of the draft Application for Payment, as specified in Section 00 70 00.

2. Facilitate monthly model coordination meetings during which the electronic Project Record Documents can be reviewed and checked against the Project Record Drawings.

3. Make the current version of the 3D construction models available via electronic communication and the electronic construction document control system specified in Section 01 31 26.

4. Conduct a final model review meeting with the Owner to demonstrate the construction models accurately reflect the conditions shown on the Project Record Drawings. At the meeting, run a clash-detection report in real-time to identify any remaining conflicts.

F. Final Deliverable:

1. Provide the Project Record on CDs, DVDs, or USB memory devices along with the hard copies specified above. Provide electronic copies of 3D models and underlying files used to generate models. Provide the number of copies specified in Section 00 70 00.

DocuSign Envelope ID: D92FB7CA-DD9A-40FF-B59F-20FB66385E4F

END OF SECTION

DocuSign Envelope ID: D92FB7CA-DD9A-40FF-B59F-20FB66385E4F

SECTION 01 78 43

SPARE PARTS

PART 1 - GENERAL

1.01 SECTION INCLUDES

A. Spare parts inspection, storage, and acceptance requirements. Spare part types and quantities are specified in the individual equipment specifications.

1.02 REFERENCED SECTIONS

A. The following Sections are referenced in this Section

1. Section 01 66 00 – Materials and equipment
2. Section 01 99 00 – Reference Forms

PART 2 - NOT USED

PART 3 - EXECUTION

3.01 INITIAL INSPECTION AND STORAGE

A. Provide an on-site, Contractor controlled, spare parts storage facility.

B. Provide 7 days written notification prior to spare parts arrival on-site.

C. Include a completed Spare Parts Record Form (Section 01 99 00) with the notification. Price information required for individual spare parts. Listing one price for several spare parts is not acceptable. A single price may be provided for assemblies consisting of multiple parts/components, rebuild kits, or other groupings if they are listed as individual spare parts in the equipment specification.

D. Jointly inspect with Owner to verify spare part condition and quantity. If Owner agrees condition and quantity comply with the individual equipment specification, jointly sign initial inspection portion of Spare Parts Release Form.

E. Place spare parts into the on-site, Contractor controlled, spare parts storage facility.

F. Store and protect spare parts in accordance with Section 01 66 00.

G. Protect spare parts subject to deterioration, such as ferrous metal items or electrical components, with lubricants and desiccants; hermetically seal in plastic wrap.

H. Place smaller parts in hinged wooden boxes or similar containers. Paint and identify boxes with stenciled lettering indicating "Spare Parts." Place an inventory sheet in a heavy-duty plastic protective sleeve and tape to the underside of the cover.

I. Store on pallets or skids and identify as follows:

1. Alphanumerically order and tag Items/containers on each pallet/skid with the information shown on the following sample tag. Equipment, pallets, or parts with inaccurate, incomplete, or missing tags will not be accepted.
2. Alphanumerically sequence pallets or skids with a unique designation. Begin sequence of items/containers on each pallet/skid with an "A."

DocuSign Envelope ID: D92FB7CA-DD9A-40FF-B59F-20FB66385E4F

a. (Example: If Pallet 007 contains five items, items would be individually tagged and identified as 007-A, 007-B, 007-C, 007-D, and 007-E.)

SPARE PARTS RECORD FORM

PROJECT	Sweet Home Mahler Water Reclamation Facility Improvements Phase 1		
DESIGN PACKAGE			
SPECIFICATION SECTION	43 25 02		
SPECIFICATION TITLE	Submersible Wastewater Pumps Solids Handling		
MFGR		MFGR CONTACT	
MFGR ADDRESS		MFGR PHONE	
VENDOR		VENDOR CONTACT	
VENDOR ADDRESS		VENDOR PHONE	

EQUIPMENT NUMBER(S):	EQUIPMENT NAME(S):
PMP-110-1	
PMP-110-2	
PMP-110-3	
PMP-110-4	

SPARE PARTS						
PART NO.	PART NAME	MFG	COST	LONG LEAD TIME*	QUANTITY	
					SPECIFIED	REC. BY MFG

*Long lead time = parts requiring more than 4 weeks from time of order to delivery.

3.02 DELIVERY AND ACCEPTANCE

A. Provide 14 days written notification prior to spare parts delivery to Owner; notification shall include a copy of the same Spare Parts Release Form signed during the initial inspection.

B. Deliver spare parts to a location determined by the Owner.

C. Deliver spare parts during Commissioning of the associated equipment.

D. Jointly inspect spare parts with the Owner and verify condition and quantities. Mutual signoff on Spare Parts Release Form constitutes spare parts acceptance by Owner.

END OF SECTION

DocuSign Envelope ID: D92FB7CA-DD9A-40FF-B59F-20FB66385E4F

SECTION 01 79 00

TRAINING

PART 1 - GENERAL

1.01 SECTION INCLUDES

A. Requirements for training the Owner's personnel, by persons retained by the Contractor specifically for the purpose, in the proper operation and maintenance of the equipment and systems installed under this Contract.

B. Coordinate with the equipment suppliers for all training activities and provide additional labor, services, and materials as required to complete training.

1.02 REFERENCED SECTIONS

A. The following Section is referenced in this Section

1. Section 01 33 00 – Submittals

2. Section 01 99 00 – Reference Forms

1.03 TRAINING SESSIONS

A. Where required by the detailed specifications, provide on-the-job training of the Owner's personnel, which will include plant operations personnel, mechanics, electricians, and electronics technicians.

B. The training sessions shall be conducted by qualified, experienced (2 years minimum), manufacturer's factory-trained representatives (not sales representatives) of the various equipment manufacturers.

C. Include instruction in both equipment operation and preventive maintenance.

D. Field training sessions shall take place at the project site. Classroom training facility will be provided at the site by the Owner.

1.04 TIMING OF TRAINING SESSIONS

A. Conduct training sessions in conjunction with the operational testing and commissioning periods.

B. Operation and maintenance manuals shall be approved and ready for distribution to the Owner's personnel at least 30 days prior to the date scheduled for the individual training session.

1.05 SUBMITTALS

A. The following information shall constitute the Contractor's training plan and be submitted to the Engineer in accordance with the provisions of Section 01 33 00.

1. Lesson plans for each training session to be conducted by the Contractor's representatives. In addition, training manuals, handouts, visual aids, and other reference materials shall be included.

2. Date, time, and subject of each training session and identity and qualifications of individuals to be conducting the training.

DocuSign Envelope ID: D92FB7CA-DD9A-40FF-B59F-20FB66385E4F

3. Training schedule. Concurrent classes will not be allowed.

B. Due to phased testing and start-up activities, Contractor may prepare separate submittals for individual equipment items and systems. The materials shall be reviewed and accepted by the Engineer no later than 3 weeks prior to delivery of the training.

PART 2 - PRODUCTS

2.01 LESSON PLANS

A. Formal written lesson plans shall be prepared for each training session. Lesson plans shall contain an outline of the material to be presented along with a description of visual aids to be utilized during the session.

B. Each lesson plan shall contain a time allocation for each subject.

C. Furnish ten copies of the training manuals, handouts, and reference materials and one copy of necessary visual aids at least 1 week prior to each training session. These materials shall remain the property of the Owner and shall be suitably bound for proper organization and easy reproduction.

2.02 FORMAT AND CONTENT

A. Each training session shall be comprised of time spent both in the classroom and at the specific location of the subject equipment or system.

B. Content is as described in PART 3.

2.03 VIDEO RECORDING

A. Record or retain the services of a commercial videotaping service to record, each training session. After taping, the material may be edited and supplemented with professionally produced graphics to provide a permanent record. Submit final digital training record to the City in electronic format.

PART 3 - EXECUTION

3.01 SCHEDULING TRAINING SESSIONS

A. Classes shall be scheduled such that classroom sessions are interspersed with field instruction in logical sequence. Consolidate short training sessions into combined sessions so that staff time is more efficiently used. The minimum combined session length should be 1.5 to 2 hours. The maximum single or combined session length shall be 4 hours. The Contractor shall arrange to have the training conducted on consecutive days, with no more than 4 hours of classes scheduled for any one day. Contractor shall provide two training sessions on each system, piece of equipment, or “topic”.

B. No training sessions shall be scheduled for Mondays or Fridays. The Contractor shall coordinate the scheduling of training sessions with the operations superintendent.

3.02 TRAINING CONTENT

A. The following services shall be provided for each item of equipment or system. Additional services shall be provided, where specifically required in individual specification sections.

a. At a minimum, classroom equipment training for operations personnel will include:

DocuSign Envelope ID: D92FB7CA-DD9A-40FF-B59F-20FB66385E4F

b. Using slides and drawings, discuss the equipment's specific location in the plant and an operational overview.

c. Purpose and plant function of the equipment.

d. A working knowledge of the operating theory of the equipment.

e. Start-up, shutdown, normal operation, and emergency operating procedures, including a discussion on system integration and electrical interlocks, if any.

f. Identify and discuss safety items and procedures.

g. Routine preventative maintenance, including specific details on lubrication and maintenance of corrosion protection of the equipment and ancillary components.

h. Operator detection, without test instruments, of specific equipment trouble symptoms.

i. Required equipment exercise procedures and intervals.

j. Routine disassembly and assembly of equipment if applicable (as judged by the City on a case-by-case basis) for purposes such as operator inspection of equipment.

2. At a minimum, hands-on equipment training for operations personnel will include:

a. Identify location of equipment and review the purpose.

b. Identifying piping and flow options.

c. Identifying valves and their purpose.

d. Identifying instrumentation:

1) Location of primary element.

2) Location of instrument readout.

3) Discuss purpose, basic operation, and information interpretation.

e. Discuss, demonstrate, and perform standard operating procedures and round checks.

f. Discuss and perform the preventative maintenance activities.

g. Discuss and perform start-up and shutdown procedures.

h. Perform the required equipment exercise procedures.

i. Perform routine disassembly and assembly of equipment if applicable.

j. Identify and review safety items and perform safety procedures, if feasible.

3. Classroom equipment training for the maintenance and repair personnel will include:

a. Theory of operation.

b. Description and function of equipment.

c. Start-up and shutdown procedures.

d. Normal and major repair procedures.

DocuSign Envelope ID: D92FB7CA-DD9A-40FF-B59F-20FB66385E4F

e. Equipment inspection and troubleshooting procedures including the use of applicable test instruments and the “pass” and “no pass” test instrument readings.

f. Routine and long-term calibration procedures.

g. Safety procedures.

h. Preventive maintenance such as lubrication; normal maintenance such as belt, seal, and bearing replacement; and up to major repairs such as replacement of major equipment part(s) with the use of special tools, bridge cranes, welding jigs, etc.

4. Hands-on equipment training for maintenance and repair personnel shall include:

a. Locate and identify equipment components.

b. Review the equipment function and theory of operation.

c. Review normal repair procedures.

d. Perform start-up and shutdown procedures.

e. Review and perform the safety procedures.

f. Perform City approved practice maintenance and repair job(s), including mechanical and electrical adjustments and calibration, and troubleshooting equipment problems.

g. Review and use equipment manufacturers’ manuals in the hands-on training.

5. Manufacturer’s Instruction Certification Form

a. Provide a Manufacturer’s Instruction Certification using the Form from Division 01 99 00.

b. Circulate an attendance list at the end of the training for signature by the Owner’s staff in attendance. Append the attendance list to the Certification Form for submittal per Section 01 33 00.

END OF SECTION

DocuSign Envelope ID: D92FB7CA-DD9A-40FF-B59F-20FB66385E4F

SECTION 01 81 00

EQUIPMENT AND SYSTEM TESTING

PART 1 - GENERAL

1.01 SECTION INCLUDES

A. Requirements for the Contractor's testing of mechanical, electrical, and instrumentation equipment and systems provided under this Contract.

B. The requirements contained in this Section supplement, but do not supersede, specific testing requirements found elsewhere in the Contract Documents.

1.02 REFERENCED SECTIONS

A. The following Sections are referenced in this Section

1. Section 01 33 00 – Submittals

2. Section 01 99 00 – Reference Forms

1.03 COORDINATION

A. Coordinate with the equipment suppliers for functional and performance testing and facility startup. Minimum levels of on-site installation and testing assistance required of the equipment suppliers is described in separate Sections.

B. Coordinate the activities of subcontractors and equipment suppliers to implement the requirements of this Section.

1.04 SUBMITTALS

A. Prepare and submit in accordance with Section 01 33 00.

B. Independent Testing Labs: When testing by an independent laboratory is specified, provide credentials and certifications to demonstrate capabilities.

C. Test Instruments Calibration: Certification that test instruments used in the testing procedure have been calibrated to an acceptable and recognized standard.

D. Testing Schedule: For each piece of equipment or system, provide a testing schedule and updates as appropriate. Submit at least 20 working days prior to the scheduled start of testing. Confirm the test schedule, or provide an updated schedule 4 days prior to the start of testing.

E. Testing Plan: Describe step by step procedure that will be utilized to systematically test equipment and systems.

F. Test Results:

1. Factory Test Results: Results of equipment tests performed by the equipment supplier at the point of manufacture and prior to shipping the equipment to the site.

2. Results of the Pre-Operational Test.

3. Results of the Functional Test.

DocuSign Envelope ID: D92FB7CA-DD9A-40FF-B59F-20FB66385E4F

4. Results of the Operational and Performance Tests.

G. Testing Form

1. Section 01 99 00 contains a sample Instrumentation Data and Calibration Test Form showing the format and level of detail required for the documentation forms.

H. Manufacturer's Field Certification

1. Submit a Manufacturer's Installation Certification Form (Section 01 99 00) after the manufacturer's Field Representative has completed the specified field services and testing. Submit the certification prior to Manufacturer's Representative leaving the plant site.

1.05 DOCUMENTATION REQUIREMENTS

A. Develop and implement a records keeping system to document compliance with the requirements of this Section.

B. Document date of test, equipment number or system name, nature of test (performance or operational), test objectives, test results and test instruments used during the test. Provide signature spaces for the Engineer and the Contractor.

1.06 TEST PLANS

A. Develop test plans in cooperation with the equipment suppliers detailing the coordinated, systematic testing of each item of equipment and system provided under this Contract.

B. Make test plans specific to the item of equipment or system to be tested. Identify by specific equipment or tag number each device or control station to be manipulated, observed or tested during the test procedure and the specific results to be observed or obtained.

C. Identify the responsibility of subcontractors and suppliers who will participate in the tests and list the names of manufacturers' representatives to be present during the duration of the test.

D. Provide step-by-step procedures for testing control and electrical circuits to affirm that the circuit is properly identified and connected to the proper device.

E. Undertake performance tests in a manner that will duplicate the actual operating conditions that will be encountered.

1.07 TESTING SCHEDULE

A. Prepare a testing schedule setting forth the sequence contemplated for performing the test work. Identify the contemplated start date, duration of the test and completion of each test.

1.08 TEST RESULTS

A. Test results shall be within the tolerances set forth in the detailed specification sections of the Contract Documents. If no tolerances have been specified, test results shall conform to tolerances established by recognized industry practice.

B. Retesting: If any portion of the work should fail to fulfill the Contract requirements and is adjusted, altered, renewed, or replaced, tests on that portion, together with all other

DocuSign Envelope ID: D92FB7CA-DD9A-40FF-B59F-20FB66385E4F

portions of the work as are affected thereby, shall be repeated within reasonable time and in accordance with the specified conditions.

PART 2 - PRODUCTS (NOT USED)

PART 3 - EXECUTION

3.01 GENERAL

A. The objective of the testing program is to demonstrate, to the Engineer's complete satisfaction, that the systems and equipment provided under this Contract meet the specified performance requirements.

B. Testing program also provides a base-line operating condition for the Owner to use in a preventative maintenance program.

C. Testing sequence consists of Pre-Operational Checkout, Functional Tests, Performance Testing and Operational Testing. These tests are required regardless of whether Factory Tests were conducted on the same piece of equipment or system.

D. Each item of mechanical, electrical, and instrumentation equipment installed under this Contract shall be tested by the Contractor to demonstrate compliance with the performance requirements of this project.

E. Provide labor, outside services, materials, test equipment and other items required to complete the specified testing and startup requirements. Furnish power, water chemicals, fuel, oil, grease and other materials needed to conduct the specified tests.

F. Install temporary valves, gauges, piping and other materials required to conduct the specified tests.

3.02 PRE-OPERATIONAL CHECKOUT

A. Pre-Operational Checkout shall be undertaken by the manufacturer's field representative.

B. Pre-Operational Checkout includes basic checks of the equipment installation prior to starting the equipment to determine if the equipment and related components have been correctly installed and is ready for starting.

C. Pre-Operational Checkout includes the following:

1. Alignment of equipment, shafts and shaft couplings, drives, belts and pulleys.
2. Filling and checking lubrication reservoirs.
3. Checking shaft seals, packing and seal lubrication system.
4. Manufacturer's recommendations for pre-start preparation.
5. Proper motor rotation
6. Circuit continuity testing, electrical testing, and instrumentation and control system testing in accordance with the requirements of Division 16.
7. Demonstrate operational controls function as intended.
8. Calibration and adjustment of electrical and instrumentation devices.

DocuSign Envelope ID: D92FB7CA-DD9A-40FF-B59F-20FB66385E4F

D. Verify tanks, pipes, conduits, vessels and equipment are clean and free of debris that may interfere with the testing or operation of the equipment. Remove debris prior to start of testing.

E. Following completion of the Pre-Operational Checkout, the manufacturer's field representative shall complete and sign a field certification form and submit to the Engineer.

3.03 FUNCTIONAL TESTS

A. After successful completion of the Pre-Operational Checkout, start individual items of equipment and systems and operate under simulated operating conditions to determine as nearly as possible whether the equipment and systems meet the requirements of these specifications.

B. Operate the equipment for a sufficient period of time to determine machine operating and characteristics, including noise, temperatures and vibration; to observe and document performance characteristics; and to permit initial adjustment of operating controls.

C. Obtain baseline operating data on all equipment with motors greater than 10 horsepower to include amperage draw, bearing temperatures, and vibration as required. This baseline data will be collected for the Owner to enter in their preventive maintenance system.

D. Post-Test Inspection: When Functional Tests have been completed, recheck equipment for proper alignment, unacceptably loose connections, unusual movement, or other indications of improper operating characteristics. Correct any deficiencies to the satisfaction of the Engineer.

E. Machines or devices which exhibit unusual or unacceptable operating characteristics shall be disassembled and inspected. Repair any defects found during the course of the inspection and identify and correct the cause of such defect. Replace specific parts, or the entire equipment item, to the complete satisfaction of the Engineer at no cost to the Owner.

3.04 OPERATIONAL AND PERFORMANCE TESTS

A. After successfully completing functional tests, conduct an operational test of each system to verify correct operation. During the operational test, conduct performance testing to verify that the system complies with the performance requirements contained in the individual equipment specifications.

B. Owner's operating personnel will fill process units and process systems with water and other process fluids to allow the Contractor to conduct the operational tests.

C. Upon completion of the filling operations, operate all parts of each system for a continuous, uninterrupted period of not less than 8 hours. During this period, the Contractor and shall undertake performance testing and shall monitor the characteristics of each machine according to manufacturer information and specifications and report any unusual conditions to the Engineer.

D. Undertake performance tests of mechanical, electrical, HVAC, and instrumentation equipment and systems to demonstrate and confirm compliance with the performance requirements specified in the individual equipment specifications.

DocuSign Envelope ID: D92FB7CA-DD9A-40FF-B59F-20FB66385E4F

E. Should the operational testing be halted for any reason related to the facilities constructed or the equipment furnished under this Contract, the operational testing program shall be repeated until the specified continuous period has been accomplished without interruption.

F. Following successful completion of the Operational Test, commissioning of the system may begin.

END OF SECTION

DocuSign Envelope ID: D92FB7CA-DD9A-40FF-B59F-20FB66385E4F

(THIS PAGE LEFT BLANK INTENTIONALLY)

DocuSign Envelope ID: D92FB7CA-DD9A-40FF-B59F-20FB66385E4F

SECTION 01 82 50

FACILITY STARTUP AND COMMISSIONING

PART 1 - GENERAL

1.01 SECTION INCLUDES

A. Requirements for Startup and Commissioning . Make sure Equipment and System testing is complete.

1.02 REFERENCED SECTIONS

A. The following Sections are referenced in this Section

1. Section 01 66 00 – Materials and Equipment
2. Section 01 79 00 – Training
3. Section 01 99 00 - Reference Forms

1.03 DEFINITIONS

A. Startup: The initial operation of the facility and/or plant, utilizing wastewater and related substances (sludge, scum), or other media which the facility has been designed to process.

B. Commissioning: A confirmation that equipment, systems and facilities operate in accordance with the design intent and satisfy the detailed requirements of the technical specifications. The duration of the commissioning period shall be not less than 7 consecutive calendar days.

1.04 SERVICES OF MANUFACTURER

A. Manufacturer's services for inspection, physical checkout, field adjustment, field testing, and startup shall comply with the requirements of this Section, the requirements of the particular equipment or product technical specifications contained and the requirements of Section 01 66 00.

B. Manufacturer's services for training and instruction of the Owner’s personnel shall comply with the requirements of the particular equipment or product technical specifications contained in Divisions 2 through 46 and Section 01 79 00.

1.05 ROLES AND RESPONSIBILITIES

A. Contractor’s Responsibilities

1. Prepare a Startup and Testing Plan for review by the Owner and Engineer in order to:
   a. Schedule and coordinate with the Engineer for startup of equipment and systems.
   b. Review procedures for facility startup.
   c. Include the Facility Startup and Commissioning Evaluation Form in Section 01 99 00 for completion at the successful end of commissioning.
2. Review preliminary punch list items with the Engineer 15 days prior to the scheduled startup; and complete, correct, or resolve at the option of the Engineer, any items which impact or interfere with the facility startup.

DocuSign Envelope ID: D92FB7CA-DD9A-40FF-B59F-20FB66385E4F

3. Attend meetings related to the review of startup plan(s).

4. Clarify submittals, testing requirements, schedules, or other items related to the startup of the equipment and facilities specified and indicated in the Contract Documents.

5. Provide all startup materials and operating supplies for 30 operating days. Supplies include lubricants, chemicals, gases, and specialized fluids to maintain operation for 30 days.

6. Provide Manufacturer's authorized representatives as required to supervise placing equipment or systems in operation and to provide guidance during the startup period.

7. Provide the Engineer a list of 24 hour, "on call" representative supervisory persons who will monitor the facility startup, and serve as a liaison for the Engineer.

8. Provide the necessary craft or labor assistance full time during the day shift and as required at other times in the event of an emergency requiring immediate attention. An emergency is defined as a failure which precludes the further operation of a critical segment of the Work. The response time shall be not less than four hours from the time of notification.

9. Correct all failures or equipment problems identified during startup. Repairs deemed the responsibility of the Contractor shall be made at no additional cost to the Owner.

10. Complete the Facility Startup and Commissioning Evaluation Form (Section 01 99 00) at the end of successful commissioning.

B. The responsibilities of the Owner’s O&M staff during the 7-day facility startup period include the following:

1. Provide staff to operate equipment, systems, and facilities requiring startup.

2. Provide all utilities including power, natural gas, and water.

C. The Engineer’s responsibilities for the facility startup period include the following:

1. Coordinate the Contractor’s startup activities with plant operations staff.

2. Verify the results of performance tests and any retesting.

3. Direct the Contractor to repair defective workmanship, materials, and equipment.

1.06 COMMISSIONING

A. The Owner’s Operations and Maintenance staff will initiate the commissioning period and will operate the facility throughout the duration of the commissioning period. All equipment must operate properly and continuously for the test period of seven (7) calendar days. If any item malfunctions during the test, the item shall be repaired and the test restarted at day zero with no credit given for the operating time before the malfunction.

B. The purpose of this 7-day operational demonstration is to:

1. Provide the environment by which the Owner’s O&M staff can place equipment and systems into service.

DocuSign Envelope ID: D92FB7CA-DD9A-40FF-B59F-20FB66385E4F

2. Expose flaws or defects in workmanship, equipment, or materials, not previously discovered that are the responsibility of the Contractor to repair, correct, modify, or replace prior to Final Acceptance.

END OF SECTION

DocuSign Envelope ID: D92FB7CA-DD9A-40FF-B59F-20FB66385E4F

(THIS PAGE LEFT BLANK INTENTIONALLY)

DocuSign Envelope ID: D92FB7CA-DD9A-40FF-B59F-20FB66385E4F

SECTION 01 99 00

REFERENCE FORMS

The forms listed below and included in this Section are referenced from other Sections of the project manual. Contractor may submit equivalent forms for Owner's approval prior to use. If Owner does not approve substitute form, Contractor must use forms found in this Section. Owner will provide electronic files of prescribed forms to Contractor upon request.

Referenced In Section	Title of Form
01.78.23	Asset Management Data Field Form
00.70.00-Article 15	Certificate of Substantial Completion
00.70.00-Article 11	Contract Change Order
01.78.23	Equipment Record Form - A
01.78.23	Equipment Record Form - B
43.25.02	Extended Warranty
01.82.50	Facility Startup and Commissioning Evaluation
00.70.00-Article 11	Field Order Force Account Work
01.81.00	Instrumentation Data and Calibration Record Test Form
01.78.23	Maintenance Schedule Form
01.81.00, 40.05.57.23, 43.25.02, 46.05.13	Manufacturer's Installation Certification
01.79.00, 40.05.57.23, 43.25.02	Manufacturer's Instruction Certification
, 43.25.02,	Motor Data Form
01.78.23	Operation and Maintenance Transmittal Form
40.80.02	Pipe Test Record Form
01.34.00	Request for Information (RFI)
01.78.23, 01.78.43	Spare Parts Record
01.78.23	Spare Parts Release
01.33.00	Submittal Transmittal
01.12.16	System Outage Request (SOR)
43.25.02,	Unit Responsibility Certificate
01.78.36	Warranty Form
00.70.00-Article 11	Work Change Directive

DocuSign Envelope ID: D92FB7CA-DD9A-40FF-B59F-20FB66385E4F

(THIS PAGE LEFT BLANK INTENTIONALLY)

DocuSign Envelope ID: D92FB7CA-DD9A-40FF-B59F-20FB66385E4F

ASSET MANAGEMENT DATA FIELD FORM:

Equipment Data Field	By Contractor	Required*	Input	Example
Equipment ID	X	1		P23DSLPCN403
Area	X	1		P23
System	X	1		DSL
Equip Type	X	1		PCN
Description	X	1		Digester #4 Recirculation Pump
Location	X	1		Digester Pump Room
Service Status	X	1		ACTV/ABDN/DLTD
Project Name	X	1		2015 Plant Expansion
Design Package	X	1		3
Size	X	1		30
Unit of Measure	X	1		HP
Manufacturer	X	1		Wemco Pumps
Model Number	X	1		Wem-omatic 30
Serial Number	X	1		234569
Subunit of		1		P23DIGTNK004
P&ID #	X	1		25.08
Elect. Drawing #	X	2		23E01
Instr. Drawing #	X	2		I-403
Other Drawing #'s		2		23P04
Normal Position		2		running
Operation Notes		2		run to recirculate Digester 4
Purchase Cost	X	1		$15634.00
Warranty Expires	X	1		11/30/2016
Manufactured Date	X	2		05/24/2014
Purchase Date	X	2		08/18/2015
Installed Date	X	1		11/30/2015
PLC Cabinet	X	2		CCR233
Motor Control Center	X	2		MCC235
MCC Bucket	X	2		4C
Power/Lighting Panel	X	2		L-239

Equipment Data Field	By Contractor	Required*	Input	Example
Panel Circuit Breaker	X	2		17
Motor/Oper: Make/Model	X	2		Baldor / Ecotech432
Specification Number	X	1		23 40 13
Submittal Number	X	1		43A
Former Equipment ID		2		P09DSLPCN003
In Criticality Model		1		Y/N
*1 – REQUIRED for ALL Equip. *2 – REQUIRED as Applicable				

CERTIFICATE OF SUBSTANTIAL COMPLETION

OWNER: _____

Project Name: _____

Owner's Contract Number _____

CONTRACTOR _____

Contract for Construction of _____

Project or Specified Part Shall Include _____

Contract Date _____

The Work performed under this Contract has been inspected by authorized representatives of the OWNER, CONTRACTOR, and ENGINEER, and the Project (or specified part of the Project, as indicated above) is hereby accepted by the OWNER and declared to be substantially completed on the above date.

1) Final completion of the Work shall be the date of such acceptance of the Work by the OWNER.
2) Final completion shall mean full performance of the Contract requirements.

A list of all items remaining to be completed or corrected has been sent to the CONTRACTOR in the OWNER's letter dated _____. All such work shall be completed or corrected to the satisfaction of the OWNER prior to the release of the CONTRACTOR's retention and within 30 calendar days following the date of the Notice of Substantial Completion.

ENGINEER

_____ _____

(Signature) (Date)

The CONTRACTOR hereby accepts the above Notice of Substantial Completion and agrees to complete and correct all of the items as outlined in the OWNER's letter to the CONTRACTOR dated _____.

CONTRACTOR

_____ _____

(Signature) (Date)

The OWNER accepts the project or specified area of the project as substantially completed and will assume full possession of the Project or specified area of the Project at (time and date). The responsibility for heat, utilities, security, and insurance under the Contract Documents will be assumed by the OWNER after that date.

OWNER

_____ _____

(Signature) (Date)

CONTRACT CHANGE ORDER

CHANGE ORDER NO: _____ DATE: _____

CONTRACT FOR: _____

OWNER: _____

TO: _____
(Contractor)

You are hereby requested to comply with the following changes from the contract plans and specifications:

Description of Changes (Supplemental Plans and Specifications Attached)	DECREASE in Contract Price	INCREASE in Contract Price
	$	$
	$	$
	$	$
TOTALS	$	$
NET CHANGE IN CONTRACT PRICE	$	$

JUSTIFICATION:

CHANGE TO CONTRACT PRICE	
Original Contract Price:	$
Current Contract Price, as adjusted by previous change orders:	$
The Contract Price due to this Change Order will be increased or (decreased) by	$
The new Contract Price due to this Change Order will be:	$

The Contract Period Provided for Completion will be ☐ Increased ☐ Decreased) ☐Unchanged: _____ Days.

APPROVALS REQUIRED: To be effective this order must be approved by Owner's Name if it changes the scope or objective of the project, or as may otherwise be required by the Contract Documents.

ACCEPTED BY:

Owner:	Contractor:	RECOMMENDED BY: CM/Engineer:
By: _____	By: _____	By: _____
Title: _____	Title: _____	Title: _____
Date: _____	Date: _____	Date: _____

DocuSign Envelope ID: D92FB7CA-DD9A-40FF-B59F-20FB66385E4F

EQUIPMENT RECORD FORM A (Electrical or Motorized Mechanical Equipment):

Equip. Description:		Equip. Loc.:	
Equip. No.	Shop Dwg. No.	Date Inst.:	Cost:
Mfgr.:		Mfgr Contact	
Mfgr. Address:			Phone:
Vendor :		Vendor Contact:	
Vendor Address:			Phone:

MAINTENANCE REQUIREMENTS	D	W	M	Q	S	A	Hours

Lubricants: Recommended	
Alternative:	
Misc. Notes:	

Recommended Spare Parts				Electrical Nameplate Data			
Part No.	Qty	Part Name	Cost	Equip			
				Make			
				Serial No.		Id. No.	
				Model No.		Frame No.	
				HP	V	Amp	Hz
				pH	RPM	SF	Duty
				Code	Ins. Cl.	DES	Type
				NEMA DES	C Amb.	Temp Rise	Rating
				Misc.			

DocuSign Envelope ID: D92FB7CA-DD9A-40FF-B59F-20FB66385E4F

Recommended Spare Parts				Mechanical Nameplate Data			
Part No.	Qty	Part Name	Cost	Equip			
				Make			
				Serial No.		Id. No.	
				Model No.		Frame No.	
				HP	V	Amp	Hz
				pH	RPM	SF	Duty
				Code	Ins. Cl.	DES	Type
				NEMA DES	C Amb.	Temp Rise	Rating
				Misc.			

DocuSign Envelope ID: D92FB7CA-DD9A-40FF-B59F-20FB66385E4F

EQUIPMENT RECORD FORM B (Electrical or Non-Motorized Mechanical Equipment):

Equip. Description:		Equip. Loc.:	
Equip. No.	Shop Dwg. No.	Date Inst.:	Cost:
Mfgr.:		Mfgr Contact	
Mfgr. Address:			Phone:
Vendor :		Vendor Contact:	
Vendor Address:			Phone:

MAINTENANCE REQUIREMENTS	D	W	M	Q	S	A	Hours

DocuSign Envelope ID: D92FB7CA-DD9A-40FF-B59F-20FB66385E4F

EXTENDED WARRANTY FORM

(For Equipment, Material, Process)

Extended Warranty For: Product Name

Specification Section No. _____

Product Manufacturer _____

Project: _____

Location: _____

We hereby guarantee the Product Name that we have constructed for a period of # of Years (#) year(s), as specified in the Section noted above, from Date, the date of acceptance of the work/substantial completion and the assumption of occupancy and beneficial use by the Name of Owner.

The following are excluded from the provisions of this warranty:

We agree that if any of the equipment, material, or process designated for Product Name should fail due to any reason other than improper maintenance or improper operation, or should any portion of the work fail to fulfill any of the requirements of the Specifications, we will, within ten days after written notice of such defects, commence to repair or replace the same together with any other work which may be damaged or displaced in so doing.

In the event of our failure to comply with the above mentioned conditions within a reasonable time after being notified, or should exigent circumstances require repairs or replacements to be made before we can be notified or respond to notification, we do hereby authorize the Name of Owner to proceed to have the defect repaired and made good at our expense, and we will pay the cost therefor upon demand.

The warranty provided herein shall not be in lieu of, but shall be in addition to any warranties or other obligations otherwise imposed by the Contract Documents and by law.

Manufacturer:	_____	Contractor:	_____
Signed:	_____	Signed:	_____
Title:	_____	Title:	_____
Date:	_____	Date:	_____
Phone:	_____	Phone:	_____
E-mail:	_____	E-mail:	_____

DocuSign Envelope ID: D92FB7CA-DD9A-40FF-B59F-20FB66385E4F

FACILITY STARTUP AND COMMISSIONING EVALUATION FORM

Owner: _____

Project: _____

Plant Facilities Description: (Include description and equipment number of all equipment and devices):

Startup Procedure: (Describe procedure for sequential startup and evaluation, including valves to be opened/closed, order of equipment startup, etc.):

Performance Evaluation Comments:

Contractor: _____ _____

Signature of Contractor's Representative — Date

Owner: _____ _____

Signature of Owner's Representative — Date

FIELD ORDER

Field Order No: _____ Date: _____

To Contractor: _____

Project No.: _____ Contract Days Changed ☐ Yes

Project Name: _____ ☐ No

Location: _____ ☐ To be determined

You are authorized to proceed with the following work:

Justification:

Cost Basis: $ _____

Time and Material
Not to Exceed Estimate

Contractor to submit.

Recommended by: _____ DATE: _____
Construction Manager

Approval By: _____ DATE: _____
Owner

Accepted By: _____ DATE: _____
Contractor

Field Work Orders will be converted to a Change Order within thirty (30) days of the Owner's approval. Maximum amount for any one Field Work Order shall conform to the Owner's policy guidelines. All costs incurred by Contractor resulting from this Field Order will be determined in accordance with the General Condditions.

Contractor must submit Daily Extra Work Reports to the Construction Manager no later than the working day following the performance of said work.

DocuSign Envelope ID: D92FB7CA-DD9A-40FF-B59F-20FB66385E4F

INSTRUMENTATION DATA AND CALIBRATION RECORD TEST FORM

Component Description _____

Component Tag Name _____

Manufacturer		Location	
Name	_____	Site	_____
Model	_____		_____
Serial #	_____	Equip	_____

	Range	Unit
Indicator Range		
Input Range		
Output Range		

General Notes
1) Attach Calibration Curves for dp Flowmeters
2) Include mounting elevations for level Instruments
3) All entries within solid box to be typed in prior to start of test

Designed Calibration			Measured Calibration		
Input Signal	Output	Eng. Value	Input	Output	Comments

Notes:

Tested by _____ (print name)

Witnessed by _____ (print name)

Signature _____

Signature _____

Date _____

Date _____

DocuSign Envelope ID: D92FB7CA-DD9A-40FF-B59F-20FB66385E4F

Maintenance Schedule Form

Equipment Numbers:_____ Equipment Names_____

Type of Work	Schedule Type	Calendar Interval	Calendar Type	Usage Interval	Usage of Unit Measure	Cycle From	Cycle To	Task Short Description	Task

Type of Work	ELEC = Electrical Type of Work, MECH = Mechanic Performing Work, INSTR = Instrumentation Type Work
Schedule Type	USAGE = Usage-based Maintenance, CALENDAR = Calendar-based Maintenance
Calendar Interval	The number of time units between scheduled work orders, e.g. ‘4’ months
Calendar Type	Units of time between scheduled work orders, e.g. DAYS, WEEKS, MONTHS
Usage Interval	The number of units between scheduled work orders, e.g. ’10,000’ hours
Usage Unit of Measure	Units of measure between scheduled work orders, e.g. hours, revolutions, cycles, etc.
Cycle From	For seasonal schedules, indicates the first month/day of the year this schedule is valid for work orders to be created
Cycle To	For seasonal schedules, indicates the last month/day of the year this schedule is valid for work orders to be created; cycle date ranges crossing over the December - January boundary are valid
Task Short Description	Short description describing tasks
Task	Work to be performed

DocuSign Envelope ID: D92FB7CA-DD9A-40FF-B59F-20FB66385E4F

MANUFACTURER'S INSTALLATION CERTIFICATION FORM

Contract No: _____ Specification Section: _____

Equipment Name _____

Contractor: _____

Manufacturer of Equipment Item: _____

The undersigned manufacturer of the equipment item described above hereby certifies that he has checked the installation of the equipment and that the equipment, as specified in the project manual, has been provided in accordance with the manufacturer's recommendations and that the trial operation of the equipment item has been satisfactory.

Comments:

_____

_____

_____

_____

Date	Manufacturer
	Signature of Authorized Representative
Date	Contractor
	Signature of Authorized Representative

DocuSign Envelope ID: D92FB7CA-DD9A-40FF-B59F-20FB66385E4F

MANUFACTURER'S INSTRUCTION CERTIFICATION FORM

Contract No: _____ Specification Section: _____

Equipment Name: _____

Contractor: _____

Manufacturer of Equipment Item: _____

The undersigned manufacturer certifies that a service engineer has instructed the owner's staff in the proper maintenance and operation of the equipment designated herein.

Operations Check List (check appropriate spaces)

- Start-up procedure reviewed ☐
- Shutdown procedure reviewed ☐
- Normal operation procedure reviewed ☐

Others:

_____ ☐

_____ ☐

Maintenance Check List (check appropriate spaces)

- Described normal oil changes (frequency) ☐
- Described special tools required ☐
- Described normal items to be reviewed for wear ☐
- Described preventive maintenance instructions ☐
- Described greasing frequency ☐

Others

_____ ☐

_____ ☐

Manufacturer: _____

Date	Signature of Authorized Representative
Date	Signature of Owner's Representative
Date	Signature of Contractor's Representative

DocuSign Envelope ID: D92FB7CA-DD9A-40FF-B59F-20FB66385E4F

MOTOR DATA FORM

Equipment Name: _____ Equipment Number: _____

Site Location: _____

Nameplate Markings

Mfr _____ Mfr Model _____ Frame _____ HP _____

Volts _____ Phase _____ RPM _____ Service Factor _____

FLA _____ LRA _____ Freq _____ Amb temp rating _____ degrees C

Time rating _____ Design letter _____

(NEMA MG1-10.35) (NEMA MG-1.16)

KVA code letter _____ Insulation class _____

The following information is required for explosionproof motors only:

A. Approved by UL for installation in Class _____ , Div _____

B. UL frame temperature code _____ , Group _____ Atmosphere

(NEC Tables 500-2 and 500-2(b))

The following information is required for high efficiency motors only:

A. Guaranteed minimum efficiency at full load or NEMA efficiency index

(NEMA MG1-12.53b)

B. Nameplate or nominal efficiency _____

Data Not Necessarily Marked on Nameplate

Type of enclosure _____ Enclosure material _____

Temp rise _____ degrees C (NEMA MG1-12.41,42)

Space heater included? _____ Yes _____ No, if Yes _____ watts _____ volts

Type of motor winding overtemperature protection, if specified:

_____

Use the space below to provide additional information on other motor modifications, if specified:

_____

_____

_____

DocuSign Envelope ID: D92FB7CA-DD9A-40FF-B59F-20FB66385E4F

OPERATING AND MAINTENANCE INFORMATION TRANSMITTAL

Submittal Description: _____

Submittal No.	**# Copies:**
☐ 1st Submission	☐ Re-Submittal
Spec Section	

	Routing	**Date Sent**	**Date Received**
Owner:	Contractor/CM		
Project:	CM/Design Consultant		
	Design Consultant/CM		
Contractor:	CM/Contractor		

Supplier Name:	Supplier Review		Design Consultant Review	
Checklist	Satisfactory	N/A	Accept	Deficient
1. Table of Contents	☐	☐	☐	☐
2. Equipment Record Forms	☐	☐	☐	☐
3. Supplier/Vendor Contact Information	☐	☐	☐	☐
4. Safety Precautions	☐	☐	☐	☐
5. Operator Pre-Start	☐	☐	☐	☐
6. Start-up, Shutdown/Post-Shutdown Procedures	☐	☐	☐	☐
7. Normal Operations	☐	☐	☐	☐
8. Emergency Operations	☐	☐	☐	☐
9. Operator Service Requirements	☐	☐	☐	☐
10. Environmental Conditions	☐	☐	☐	☐
11. Lubrication Data	☐	☐	☐	☐
12. Preventative Maintenance Plan/Schedule	☐	☐	☐	☐
13. Troubleshooting Guide/Diagnostic Techniques	☐	☐	☐	☐
14. Wiring Diagrams and Control Diagrams	☐	☐	☐	☐
15. Maintenance and Repair Procedures	☐	☐	☐	☐
16. Removal and Replacement Procedures	☐	☐	☐	☐
17. Spare Parts and Supply List	☐	☐	☐	☐
18. Corrective Maintenance Man-hours	☐	☐	☐	☐
19. Parts Identification	☐	☐	☐	☐
20. Warranty Information	☐	☐	☐	☐
21. Personnel Training Requirements	☐	☐	☐	☐
22. Testing Equipment and Special Tool Information	☐	☐	☐	☐

Remarks:	

_____ (Contractor's Signature)

_____ (Supplier's Signature)

DocuSign Envelope ID: D92FB7CA-DD9A-40FF-B59F-20FB66385E4F

PIPE TEST RECORD

Date: _____

Project Name: _____ **Project No.:** _____

Contractor: _____

Pipeline Size & Name	Pipe Type	Pipe Location/Description
(SL), SN, IA, etc.)	(DI, PVC, Steel, Copper, etc.)	(Attach sketch if needed)
Section Tested: From: _____ To: _____	**First Test** ☐ **Or** **Re-Test** ☐	**Length of Pipe Tested:** _____ **Ft.**

Test Specifications	Actual Test Results
Type of Test: _____	Start pressure: _____
Type of Test: _____	End Pressure: _____
	Start time _____ Stop time _____ Duration _____
Duration: _____	
Allowable loss: _____	Actual loss: _____

Comments:

_____

_____

_____

_____

Test Passes	☐
Test Fails	☐

Tested By: _____
Contractor

Test Witnessed By: _____
Construction Inspector

DocuSign Envelope ID: D92FB7CA-DD9A-40FF-B59F-20FB66385E4F

REQUEST FOR INFORMATION

RFI No.: XXX

Owner: _____

Project: _____

Contractor: _____ Engineer _____

RFI Generated by: ☐ Contractor ☐ CM ☐ Other

Priority Level: ☐ Low ☐ High ☐ On Critical Path

Is there a Cost Impact associated with this RFI? ☐ Yes ☐ No ☐ Possibly

Is there a Time Impact associated with this RFI? ☐ Yes ☐ No ☐ Possibly

RFI Title:

Reference: Spec: Sheet:

Requested Information:

Signed: Date:

Response:

Signed: Date:

DocuSign Envelope ID: D92FB7CA-DD9A-40FF-B59F-20FB66385E4F

SPARE PARTS RECORD FORM

PROJECT			
DESIGN PACKAGE			
SPECIFICATION SECTION			
SPECIFICATION TITLE			
MFGR		MFGR CONTACT	
MFGR ADDRESS		MFGR PHONE	
VENDOR		VENDOR CONTACT	
VENDOR ADDRESS		VENDOR PHONE	

EQUIPMENT NUMBER(S):	EQUIPMENT NAME(S):

SPARE PARTS						
PART NO.	PART NAME	MFG	COST	LONG LEAD TIME*	QUANTITY	
					SPECIFIED	REC. BY MFG

*Long lead time = parts requiring more than 4 weeks from time of order to delivery.

DocuSign Envelope ID: D92FB7CA-DD9A-40FF-B59F-20FB66385E4F

SPARE PARTS RELEASE FORM

Design Package: _____

Project No:_____ Place of Delivery:_____ Date: _____

Pallet Number	Container Number	Spec Section	Equipment Number	Spare Part Description	Price

_____ _____

Signature of Contractor Date

_____ _____

Signature of Owner Date

cc: Maintenance Supervisor
Operations Supervisor

SUBMITTAL TRANSMITTAL

Submittal Description _____

Priority Level: ☐ Low ☐ Medium ☐ High ☐ **On Critical Path**

Submittal No.	
☐ 1st Submission	☐Re-Submittal
Spec Section	
Dwg/Detail No.	

Owner:	**Routing**	**Date Sent**	**Date Received**
Project Name:	Contractor/CM		
	CM/Design Consultant		
Contractor:	Design Consultant/CM		
	CM/Contractor		

We are sending you: ☐ Attached ☐ Under separate cover via _____

☐ Submittals for review and comment

☐ Product Data for information only _____

No. Copies	**Description**	**Manufacturer**	**Reviewer Action**	**Reviewer Initials**

The Action Designated Above is in Accordance with the Following Legend:

A – No Exceptions Taken
B – Make Corrections Noted
C – Amend and Resubmit
D – Rejected
E – Review not Required

CONTRACTOR: Must certify one of the following statements pertaining to the transmittal or submittal sent for review:

☐ As the General Contractor for this project we certify that the material or equipment contained in this submittal meets all the requirements, including coordination with all related work specified (no exceptions)

☐ As the General Contractor for this project we certify that the material or equipment contained in this submittal meets all the requirements specified except for the attached deviations.

Comments:

Certified by: _____
(Contractor's Signature)

SYSTEM OUTAGE REQUEST FORM

System to be Shutdown: _____ **SOR No.:** _____

Date of Shutdown: _____ Beginning at: _____ am/pm

Duration of Shutdown: _____ Critical Path Activity? ☐ yes ☐ no

Owner:		**Routing**	**Date Sent**	**Date Received**
Project:		Contractor/CM		
Contractor:		CM/Owner-Operations		

Regulatory Agency Notification Required? ☐ yes ☐ no Is a Dry Run Required? ☐ yes ☐ no

Combustible/Hazardous Gases Present? ☐ yes ☐ no Confined Space Entry? ☐ yes ☐ no

Describe work to be performed including detailed sequence of events, safety plan, protection of existing facilities, equipment to be used and contingency plan. Use additional sheets as necessary.

Will you require assistance from Owner Operations? ☐ yes ☐ no

Note: *Existing valves and controls shall be operated by Owner staff only*

Outage Contact Information	Name of Person on Call/Duty	Home Phone	Cell Phone
Contractor			
Construction Manager			
Owner Operations			
Design Consultant			

Additional Contractor Comments:

Certified by: _____
(Contractor's Signature)

CM / Owner / Design Consultant Review Action

☐ SOR Acceptable with comments noted on attached.

☐ SOR Not Acceptable with reasons noted on attached. Re-Submittal is required.

_____ _____
(Construction Manager's Signature) Date

DocuSign Envelope ID: D92FB7CA-DD9A-40FF-B59F-20FB66385E4F

Name of Owner

CERTIFICATE OF UNIT RESPONSIBILITY
For Specification Section

Section Number and Title

In accordance with the contract documents, the undersigned manufacturer accepts unit responsibility for all components of equipment furnished under specification Section Section #***. We hereby certify that these components are compatible and comprise a functional unit suitable for the specified performance and design requirements.***

Name of Corporation

Street Address

City, State and Zip Code

By: _____
Duly Authorized Official

Notary Public

Commission Expiration Date

Name

Title

Seal:

Date: _____

DocuSign Envelope ID: D92FB7CA-DD9A-40FF-B59F-20FB66385E4F

WARRANTY FORM
(For Milestones)

Warranty For: Milestone: _____

Project: _____

Location: _____

We hereby guarantee the Match Milestone from Above that we have constructed for a period of one (1) year from Date, the date of acceptance of the work/substantial completion and the assumption of occupancy and beneficial use by the Name of Owner, or within such longer period of time as may be prescribed by law or by terms of any special extended warranty required by the Contract Documents.

The following are excluded from the provisions of this warranty:

We agree that if any of the portion of the project for Milestone: Match Milestone from Above should fail due to any reason other than improper maintenance or improper operation, if any pipe or appurtenances should develop leakage, or if any settlement of fill or backfill occurs, or should any portion of the work fail to fulfill any of the requirements of the Specifications, we will, within ten days after written notice of such defects, commence to repair or replace the same together with any other work which may be damaged or displaced in so doing.

In the event of our failure to comply with the above mentioned conditions within a reasonable time after being notified, or should exigent circumstances require repairs or replacements to be made before we can be notified or respond to notification, we do hereby authorize the Name of Owner to proceed to have the defect repaired and made good at our expense, and we will pay the cost therefor upon demand.

The warranty provided herein shall not be in lieu of, but shall be in addition to any warranties or other obligations otherwise imposed by the Contract Documents and by law.

Contractor: _____

Signed: _____

Title: _____

Date: _____

Phone: _____

E-mail: _____

DocuSign Envelope ID: D92FB7CA-DD9A-40FF-B59F-20FB66385E4F

WORK CHANGE DIRECTIVE

No. _____

Date of Issuance: _____ Effective Date: _____

Project: _____

Owner: _____ Owner's Contract No.: _____

Contractor: _____

Attention:
You are hereby directed to promptly execute this Work Change Directive issued in accordance with General Conditions, Article 11.03, Work Change Directive, for changes in the Work without changes in Contract Price or Contract Times. If you consider that a change in Contract Price or Contract Times is required, please notify the Construction Manager immediately and before proceeding with this Work. Any modifications, including a change to the contract price or contract requirements shall be covered by a formal Change Order executed by Owner and Contractor.

Reference: _____ _____
Specification Section(s)/RFI # Drawing(s) / Detail(s)

Description:

_____

_____

_____

_____

_____

Refer to Drawing Sheets: _____ Section or Detail: _____

Refer to Specification Paragraphs: _____

Will additional drawings be necessary? ☐ Yes ☐ No

Attachments:

_____

_____

_____

_____

Receipt Acknowledged by (Contractor):

Issued by: _____
Construction Manager

_____ Date: _____
Signature

Copy to Owner

DocuSign Envelope ID: D92FB7CA-DD9A-40FF-B59F-20FB66385E4F

END OF SECTION

CITY OF SWEET HOME

CONTRACT DOCUMENTS

FOR

MAHLER WATER RECLAMATION FACILITY IMPROVEMENTS PROJECT PHASE 1

VOLUME 2 OF 3

TECHNICAL SPECIFICATIONS DIVISIONS 02-46

BID DOCUMENTS

Department of Public Works, Engineering Division
1400 24th Avenue
Phone 541.367.6359

AUGUST 2022

(THIS PAGE LEFT BLANK INTENTIONALLY)

CITY OF SWEET HOME
MAHLER WRF IMPROVEMENTS PROJECT
PHASE 1

SECTION 00 01 10 – TABLE OF CONTENTSFOR

VOLUME 1 of 3

Division 00 – Procurement and Contracting Requirements

00 11 00	Advertisement for Bids
00 20 00	Instruction Pre-Qualified Bidders
00 40 00	Bid Form
00 43 00	Bid Bond
00 43 33	Proposed Products List
00 43 37	First-Tier Subcontractor Disclosure Form
00 45 19	Non-Collusion Affidavit
00 51 00	Notice of Award
00 52 00	Agreement between Owner and Contractor for Construction Contract
00 55 00	Notice to Proceed
00 61 10	Performance Bond
00 61 12	Warranty Bond
00 61 15	Payment Bond
00 70 00	Standard General Conditions of the Construction Contract
00 73 43	Oregon Prevailing Wage Rates

Division 01 - General Requirements

01 10 00	Summary of Work
01 12 16	Work Sequence and Constraints
01 29 02	Measurement and Payment
01 31 15	Partnering
01 31 19	Project Meetings
01 31 26	Electronic Construction Document Control System
01 32 16	CPM Construction Schedule
01 33 00	Submittals
01 34 00	Requests for Information and Clarifications
01 45 00	Contractor Quality Control
01 45 23	Testing and Inspections
01 45 26	Special Tests and Structural Observations
01 52 00	Construction Facilities and Utilities
01 57 19	Environmental Controls
01 57 29	Sewer Bypass Pumping
01 61 10	Seismic Design Requirements
01 61 11	Seismic Anchorage and Bracing
01 61 50	Wind Design Criteria
01 66 00	Materials and Equipment
01 66 05	American Iron and Steel Program Compliance
01 71 13	Mobilization and Demobilization
01 72 50	Protection of Existing Facilities

01 73 50 Cutting and Patching
01 77 00 Contract Closeout Procedures
01 78 23 Operation and Maintenance Data
01 78 36 Warranties and Bond
01 78 39 Project Record Drawings
01 78 43 Spare Parts
01 79 00 Training
01 81 00 Equipment Startup and Testing
01 82 50 Facility Startup and Commissioning
01 99 00 Reference Forms

VOLUME 2 of 3

Division 02 - Existing Conditions

02 41 00 Demolition, Salvage and Abandonment

Division 03 - Concrete

03 11 00 Concrete Formwork
03 15 00 Concrete Accessories
03 20 00 Concrete Reinforcement
03 30 00 Cast-In-Place Concrete
03 39 00 Concrete Curing
03 60 00 Grout

Division 05 – Metals

05 50 01 Anchor Bolts and Anchoring Devices
05 55 05 Miscellaneous Metalwork

Division 06 - Wood and Plastics

06 10 00 Rough Carpentry

Division 07 - Thermal and Moisture Protections

07 21 00 Thermal Insulation
07 25 00 Weather Barriers
07 30 12 Roofing Underlayment, Extended High-Temperature
07 41 13 Metal Roof Panels
07 42 13 Metal Wall Panels
07 62 00 Sheet Metal Flashing and Trim
07 92 00 Joint Sealants

Division 08 - Doors and Windows (Openings)

08 11 13 Hollow Metal Doors and Frames
08 33 23 Overhead Coiling Doors
08 71 00 Door Hardware
08 80 00 Glazing

Division 09 – Finish

09 21 16	Gypsum Board Assemblies
09 91 13	Exterior Painting
09 91 23	Interior Painting
09 96 00	High Performance Coatings

Division 10 - Specialties

10 14 00	Signage
10 14 13	Piping and Valve Identification Systems
10 44 00	Fire Protection Specialties

Division 23 – Heating, Ventilating, and Air Conditioning (HVAC)

23 00 00	Heating, Ventilating and Air Conditioning (HVAC) Basic Requirements
23 05 13	Common Motor Requirements for HVAC Equipment
23 05 29	Hangers and Supports for HVAC Piping, Ductwork, and Equipment
23 05 48	Vibration and Seismic Controls for HVAC Equipment
23 05 53	Identification for HVAC Piping, Ductwork, and Equipment
23 05 93	Testing, Adjusting, and Balancing for HVAC
23 07 00	HVAC Insulation
23 09 33	Electric and Electronic Control System for HVAC
23 21 13	HVAC Piping
23 31 00	HVAC Ducts and Casings
23 33 00	Air Duct Accessories
23 34 00	HVAC Fans
23 37 00	Air Outlets and Inlets
23 40 00	HVAC Air Cleaning Devices
23 81 26	Small Split System and Unitary HVAC Equipment
23 82 00	Terminal Heat Transfer Equipment

Division 26 – Electrical

26 01 00	Operation and Maintenance of Electrical Systems
26 01 06	Starting and Adjusting
26 01 08	Electrical Testing
26 01 15	Demonstration and Training
26 05 00	Common Work Results for Electrical
26 05 05	Selective Demolition for Electrical
26 05 08	Hazardous Classified Area Construction
26 05 19	Low-Voltage Electrical Power Conductors and Cables
26 05 26	Grounding and Bonding for Electrical Systems
26 05 28	Seismic Restraints for Electrical Systems
26 05 29	Hangers and Supports for Electrical Systems
26 05 33	Raceways and Boxes for Electrical Systems
26 05 53	Identification for Electrical Systems
26 05 73	Overcurrent Protective Device Coordination Study
26 05 83	Wiring Connections
26 08 00	Commissioning of Electrical Systems
26 21 00	Low-Voltage Electrical Service Entrance

26 22 00 Low-Voltage Transformers
26 24 13 Switchboards
26 24 16 Panelboards
26 24 19 Motor Control Centers
26 27 26 Wiring Devices
26 28 16 Enclosed Switches and Circuit Breakers
26 32 00 Packaged Diesel Generator Assemblies
26 51 00 Interior Lighting
26 56 00 Exterior Lighting

Division 27 - Communications

27 32 00 Telephone and Data Equipment

Division 31 - Earthwork

31 00 00 Earthwork
31 10 00 Site Preparation
31 23 16.13 Trenching
31 23 16.26 Rock Excavation
31 23 19 Dewatering
31 23 23.33 Controlled Low Strength Material
31 50 00 Excavation Support and Protection

Division 32 - Exterior Improvements

32 01 16 Pavement Restoration
32 01 17 Cold Plane Pavement Removal
32 01 20 Reconditioning Existing Roadway
32 11 23 Aggregate Base Course Material
32 12 16 Asphalt Concrete Pavement
32 31 13 Chain Link Fencing and Gates

Division 33 – Utilities

33 13 00 Disinfecting Water Pipelines
33 39 13 Precast Concrete Manholes

Division 40 - Process Integration

40 05 07 Pipe Hangers and Supports
40 05 10 Piping Systems
40 05 51 General Requirements for Valves
40 05 57.13 Manual Valve and Gate Operators and Operator Appurtenances
40 05 57.23 Powered Valve Operators and Operator Appurtenances
40 05 60 Valves and Appurtenances
40 05 65 Fabricated Stainless Steel Gates
40 05 96 Seismic Restraints for Piping
40 61 93 Process Control System Input/Output List
40 61 96.13 Process Control Descriptions – Influent Pump Station Pumps
40 61 96.14 Process Control Description - Influent Pump Station Gate
40 63 00 Control System Equipment

40 70 00 Instrumentation for Process Systems
40 71 00 Flow Measurement
40 72 00 Level Measurement
40 78 00 Panel Mounted Equipment
40 78 15 Pump Disconnect Panels
40 80 00 Commissioning of Process Systems
40 80 01 Testing Gravity Flow Pipelines
40 80 02 Testing Pressure Piping

Division 43 – Process Gas and Liquid Handling, Purification, and Storage

43 25 02 Submersible Wastewater Pump Solids Handling

Division 46 – Process Gas and Liquid Handling, Purification, and Storage

46 05 13 General Requirements for Equipment
46 05 14 Equipment Mounting

VOLUME 3 of 3

Volume 3 Drawings

SUPPLEMENTARY INFORMATION (Under Separate Cover)

McMillen Jacobs Associates*, Geotechnical Data Report – City of Sweet Home, Mahler Water Reclamation Facility Improvements*, Final June 2022

END OF SECTION

(THIS PAGE LEFT BLANK INTENTIONALLY)

SECTION 02 41 00

DEMOLITION, SALVAGE AND ABANDONMENT

PART 1 - GENERAL

1.01 SECTION INCLUDES

A. Demolition, salvage, and abandonment of existing facilities.

1.02 REFERENCED SECTIONS

A. The following Section is referenced in this Section

1. Section 01 33 00 – Submittals
2. Section 31 00 00 – Earthwork

1.03 SUBMITTALS

A. Comply with Section 01 33 00.

B. Description of removal procedures for careful removal of materials and equipment and the protection of facilities which are to remain undisturbed.

C. Time schedule for demolition work. Show demolition in relation to new construction, including any temporary facilities.

1.04 EXISTING CONDITIONS

A. Prior to the submittal of Bids, Contractor shall visit the site and inspect all facilities to become familiar with existing conditions and utilities.

1.05 REGULATORY REQUIREMENTS

A. Dispose of debris offsite in accordance with the requirements of agencies having jurisdiction.

B. Comply with applicable air quality control regulations.

C. Obtain necessary permits for building demolition, transportation of debris to disposal site(s) and dust control.

D. Erect appropriate safety devices to protect the general public, Owner's operations personnel, and workers from the hazards of demolition activities. Install barriers, guard rails and fences, and provide appropriate warning signs.

1.06 BURNING

A. The use of burning at the project site for the disposal of refuse, debris, and waste materials will not be permitted.

PART 2 - PRODUCTS (NOT USED)

PART 3 - EXECUTION

3.01 GENERAL

A. The Drawings identify the major equipment and facilities to be demolished, salvaged, or abandoned. Auxiliary utilities such as water, air, drainage, lubrication oil, electrical wiring, controls, and instrumentation are not necessarily shown. Remove auxiliary utilities, as well as equipment and pipe supports and associated instrumentation devices pertaining to piping or equipment designated to be removed.

3.02 PROTECTION OF EXISTING FACILITIES

A. Before beginning any cutting, trenching, or demolition work, carefully survey the existing work and examine the Contract Documents to determine the extent of the Work.

B. Take precautions to prevent damage to facilities which are to remain in place or are to be salvaged, and be responsible for any damages to these facilities resulting from this work. Repair or replace damages to such work to return the facilities to its pre-existing condition at no additional cost to the Owner.

3.03 DEMOLITION

A. Demolish structures and equipment in an orderly and safe manner.

B. Dispose of material not identified for salvage or re-installation at a new location.

C. Minimize dust by sprinkling with water.

D. Backfill excavations caused by demolition in accordance with Section 31 00 00.

3.04 SALVAGE

A. Carefully remove and salvage, for reuse by the Owner, items, if any, identified on the Drawings

B. Remove salvage items in their largest pieces that can be easily handled and stored by Owner's personnel. Remove these items from their existing location and deliver them to a location designated by the Owner.

C. Remove items to be salvaged in a workmanlike manner and take the necessary precautions to prevent damage to the materials and equipment.

3.05 BURIED PIPELINES

A. Where buried pipelines are shown to be removed on the Drawings, they may be abandoned in place if there is no conflict with proposed construction and they are not located under or within 10 feet of any proposed structure.

3.06 ASBESTOS CEMENT PIPE

A. Remove and dispose of asbestos cement pipe disturbed during the performance of the Work. Remove and dispose in accordance with all Federal, State, and local laws, regulations, requirements, and guidelines.

B. Notify all appropriate authorities prior to performing work related to removal and disposal of asbestos cement pipe.

C. Provide landfill disposal weight records to Engineer for use as the basis of unit price payment.

D. Where necessary to connect into existing City asbestos cement potable water lines, perform work in accordance with all Federal, State, and local laws, codes, requirements, and guidelines.

3.07 DISPOSAL OF DEMOLISHED MATERIALS

A. Concrete, site debris, rubbish, and other materials resulting from demolition operations, as well as mechanical and electrical equipment designated to be demolished, shall be the property of the Contractor and shall be legally disposed of at the Contractor's expense.

3.08 CLEANING

A. During and upon completion of the demolition operations, promptly remove unused tools and equipment, surplus materials, rubbish, debris, and dust and shall leave work areas in a clean condition.

B. Do not sweep, grade, or flush surplus materials, rubbish, or debris into storm drains, channels, lakes, or streams.

END OF SECTION

(THIS PAGE LEFT BLANK INTENTIONALLY)

SECTION 03 11 00

CONCRETE FORMWORK

PART 1 - GENERAL

1.01 SECTION INCLUDES

A. Formwork for cast-in-place concrete, including shoring and form supports, and installation of embedded items.

1.02 REFERENCED SECTIONS

A. The following Sections are referenced in this Section

1. Section 01 33 00 – Submittals
2. Section 03 15 00 – Concrete Accessories
3. Section 03 20 00 – Concrete Reinforcement
4. Section 03 30 00– Cast-in-Place Concrete

1.03 SYSTEM RESPONSIBILITY

A. The design for structural adequacy, engineering, and erection of formwork shall be the sole responsibility of the Contractor.

B. Engineer's review of shop drawings and/or forms installed in place does not relieve the Contractor of their responsibility for adequately designing, constructing, and maintaining the forms so that they will function properly.

C. Removal of the formwork and any resulting structural or finishing damage is the sole responsibility of the Contractor.

1.04 SYSTEM DESCRIPTION

A. Design Criteria: Design formwork and appurtenant items in accordance with ACI 117, ACI 347R, and requirements specified herein.

B. Performance Requirements

1. Tolerances: Construct formwork to achieve the tolerances specified in ACI 347R, and as modified herein for the finished concrete structure:

a. Variation of the linear outline from the established position in plan: 1/2 inch.

b. Departure from level or from the grades shown: +1/2 inch and - 1/2 inch.

c. Departure from plumb or specified batter: (0.3 % X Height) < 1 inch.

d. Variation in thickness of slabs and walls: +1/2 inch and -1/4 inch.

e. Departure in location and size of slab or wall openings: +1/4 inch and -1/4 inch.

f. Abrupt irregularities (using a 5 feet long straight edge): +1/2 inch and -1/4 inch.

2. Do not combine the tolerances specified under the various foregoing categories in the evaluation of a structure element so as to arrive at a total combined tolerance which is greater than that permitted under any single category.

3. Utilize stricter tolerances than those specified as necessary to accommodate manufacturer requirements or standard industry practice for the installation of equipment, structural steel, miscellaneous metals, and items embedded in or otherwise attached to concrete.

1.05 SUBMITTALS

A. Comply with Section 01 33 00.

B. Engineer's review of formwork submittals shall be with regard to ability to achieve surface finish and tolerances.

C. Product Data: Provide manufacturers' data and installation requirements for form materials, form coatings, sealers, release agents, form ties, and other accessories.

D. Structural Calculations

1. Submit structural calculations for formwork design, stamped and signed by a licensed Professional Engineer in Oregon.

E. Shop Drawings

1. Fully dimensioned drawings of fabricated forms showing general arrangement of form panels, including number of sections, length of sections, form windows, ties and sizes of structural members.

2. Indicate locations of construction joints, locations and sizes of openings and blockouts, and identify the following items: materials, bracing, shoring and re-shoring, and arrangement of ties and other accessories.

3. Submit removal sequence diagrams and procedures for form removal.

4. Formwork shall be designed by a licensed Professional Engineer in Oregon and design drawings shall be stamped and signed.

F. Quality Control Plans

1. Methods for assuring that forms are constructed and erected to the lines, grades, and within tolerances specified prior to placing concrete for that pour.

2. Methods for assuring that formed concrete has sufficient strength for erecting and stripping of forms.

3. Methods for achieving required finishes.

1.06 QUALITY ASSURANCE

A. Reference Standards

1. American Concrete Institute (ACI):

a. ACI 117 – Tolerances for Concrete Construction.

b. ACI 347R – Standard Recommended Practice for Concrete Formwork.

c. ACI 301 – Standard Specifications for Structural Concrete.

d. ACI 318 – Building Code Requirements for Structural Concrete.

2. American Plywood Associations (APA)

a. PS 1 US Product Standard for Construction and Industrial Plywood.

B. Installation of Formwork

1. Build, erect and move forms under the supervision of experienced superintendence and craftsmen.

1.07 SEQUENCING AND SCHEDULING

A. Allow sufficient time between erection of forms and placing of concrete for other trades to properly install concrete reinforcement and embedded items.

1.08 PRODUCT DELIVERY, STORAGE AND HANDLING

A. Deliver, store, protect, and handle products in accordance with manufacturer's instruction.

B. Store materials in a manner that will prevent any damage or deterioration and allow easy access for inspection and identification of each item.

PART 2 - PRODUCTS

2.01 MATERIALS

A. General

1. Construct forms using materials that are straight, rigid, mortar-tight, and of the correct shape and dimensions. Clean inside surfaces of forms to remove dirt, mortar, and foreign materials.

B. Form Materials for Exposed Surfaces

1. APA grade-stamped "B-B plyform, Class 1, Exterior" Douglas fir plywood.

2. Minimum 3/4 inch thick with reinforcement for the spans and construction loading.

3. Smooth, uniform in size and free of raised grain, torn surfaces, worn edges, patches or other defects; no mill oiling permitted.

4. Exposed corners and edges of concrete shall have a 3/4-inch chamfer.

C. Form Materials for Unexposed Surfaces

1. Made of wood, metal, or other acceptable material.

2. Wood Forms: Constructed of sound lumber or smooth plywood of suitable dimensions, free from knotholes and loose knots.

3. Metal Forms: As acceptable for the class of work involved and of the thickness and design required for rigid construction.

D. Curved Surfaces: Form with metal, plywood, or adequately supported, surfaced and matched Douglas fir boards which are not more than 4-inches wide.

E. Styrofoam: Construction Grade.

F. Formwork Accessories

1. Form Ties: Metal, removable to a depth of at least 1-1/2 inches below the surface of the concrete. At locations of each removal, a uniform and circular hole shall be made and patched. Ties shall be of sufficient strength to prevent the spreading of the forms during concrete placement. The use of wire ties will not be permitted.

2. Chamfer Strips: 3/4-inch fillet milled from clear, straight-grain pine, surfaced each side; or extruded vinyl type with or without nailing flange.

3. Nails, Spikes, Lag Bolts, Through Bolts, Anchorages: Sized as required; of strength and character to maintain formwork in place while placing concrete.

G. Form Release Agent

1. Commercial formulation designed for use on all form facing materials used, which will not:

a. Bond with, stain, or adversely affect concrete surfaces.

b. Impair subsequent treatment of concrete surfaces requiring bond or adhesion.

c. Impede wetting of surfaces which will be cured with water, steam, or curing compounds.

d. Form coatings containing mineral oils or petroleum solvents such as paraffin or other non-drying materials will not be permitted.

e. For metal forms, use specially formulated coatings for metal forms to prevent rust stains on concrete.

H. All other materials not specifically described, but required for proper completion of the concrete formwork, shall be as selected by the Contractor and subject to approval by the Engineer.

PART 3 - EXECUTION

3.01 PREPARATION

A. Conform to considerations and recommendations in ACI 318, Chapter 6.

B. Vertical and Horizontal Controls: Establish and maintain necessary benchmarks, lines, or controls throughout construction.

C. Obtain necessary information and provide for openings, sleeves, recesses, nailers, anchors, ties, inserts, and similar embedded items. Coordinate with concrete and other related work for requirements governing embedment and sleeving of pipes and conduit. Coordinate work with that of Section 03 15 00.

D. Obtain approval from Owner's Representative before framing openings not shown on Structural Drawings.

E. Make arrangements with the Owner's Representative to inspect all formwork and enclosed volume, including the interior of formed area prior to installing the closure

forms, for inspection of the forms, cleanup and preparation of the adjacent surfaces, and in accordance with Section 03 20 00.

F. Check formwork during placing of concrete using tell-tale devices, such as plumb bobs and known offsets, measurements, and other appropriate means, as necessary to detect formwork movements and to verify that the specified tolerances are achieved.

3.02 CONSTRUCTION OF FORMS

A. General

1. Construct formwork to produce concrete surfaces conforming to tolerances in ACI 301.

2. Construct formwork to the exact shapes, lines and dimensions of concrete members, arranged to allow erection in proper sequence and to permit removal without damage to concrete finish.

3. Unless otherwise indicated on Drawings, construct formwork panels in sections as large as practicable. Construct forms of boards or plywood of same widths, shapes, and design for accurate location of form joints as indicated on the shop drawings. Make joints between panels tight to minimize loss of mortar through the joint.

4. Verify clear space between forms to insure allowable coverage for reinforcing steel and allowable tolerances for construction.

5. Forms for walls of considerable height shall be arranged with tremies and hoppers for placing concrete in a manner that will prevent segregation and accumulation of hardened concrete on the forms or reinforcements above the fresh concrete.

6. Provide temporary openings at bottom of forms where necessary in order to facilitate cleaning and inspection before concrete placement. Provide blockouts for mechanical and electrical work wherever necessary.

7. Provide forms for footings wherever concrete cannot be placed against solid earth excavation.

8. Apply approved form coatings, sealers and release agents immediately before erecting forms where necessary to achieve the specified curing and finishes.

B. Framing and Bracing

1. Use framing, bracing and supporting members of ample size and strength to safely carry, without excessive deflection (exceeding allowable tolerances), all dead and live loads to which formwork may be subjected; they shall be placed sufficiently close to prevent any apparent bulging or sagging of forms.

C. Exposed Concrete Surfaces

1. Make plywood panel patterns regular and symmetrical, joints plumb and level, and horizontal joints continuous.

2. Control reuse of forms for exposed surfaces in order to provide a surface of uniform color and texture absent of sharp demarcation between adjacent surfaces.

3. Provide 3/4 inch chamfer at corners of exposed concrete unless otherwise noted. At chamfers, the concrete cover for reinforcement is critical and the minimum specified thickness shall strictly apply.

4. Edges of all form panels in contact with concrete shall meet the required tolerances set forth in Section 3.3 of ACI 347R for Class A surfaces. Form joints shall be tight to prevent the passage of mortar, water, and grout.

D. Embedded Items: Secure all structural inserts, bolts, plates, sleeves and other embedded items.

3.03 APPLICATION OF FORM COATINGS

A. Thoroughly clean forms and coat with approved form coating material prior to initial use and before each reuse. Excess form coating material shall not stand in puddles in the forms nor shall such coating come in contact with hardened concrete against which fresh concrete is to be placed.

B. Apply form coating material before reinforcing steel, anchoring devices and embedded items are placed.

3.04 FALSEWORK

A. Contractor shall be fully responsible for the proper strength, safety and adequacy of the falsework, the supports, and bearing surfaces used on and in connection with the work. Design falsework to support imposed loads without deformation, deflection, or settlement.

B. Use wedges in pairs or jacks where required to maintain and/or adjust forms and formwork for beams, slabs and other parts of the structure at exact elevations. To ensure uniform bearing, single wedges are not permitted. Comply with requirements of ACI 347R.

C. Carry vertical and lateral loads to the ground by the falsework system or by the completed structure after it has attained the requisite strength. Protect falsework supports, when placed on ground, against undermining or settlement.

3.05 REMOVAL OF FORMS AND FALSEWORK

A. Remove forms in such a manner that does not impair safety and serviceability of the structure.

B. Do not remove supports until members have sufficient strength to safely support their own weight and all superimposed loadings with proper factor of safety.

C. Maintain formwork in place until the concrete has attained the minimum percentage of specified design compressive strength specified below.

1. Side forms for footings, foundations, slabs on grade, or other components that do not resist bending: Do not remove until the concrete has attained 25% of the specified 28-day compressive strength.

2. Forms supporting concrete beams, suspended and cantilevered slabs, walls, or other members subject to bending stress: Do not remove until the concrete has attained 90% of specified 28-day compressive strength.

a. Do not load such members until the concrete has attained its specified 28-day compressive strength.

D. Remove forms, supports, and falsework without hammering or prying against the concrete.

E. Remove fins and other projections as soon as the forms have been stripped.

F. After forms have been removed, examine concrete surfaces to identify defects and repair defects and irregularities in surfaces and finishes as specified in Section 03 30 00.

G. Clean all exposed concrete surfaces and adjoining work stained by leakage of concrete.

3.06 REUSE OF FORMS

A. Clean and repair surfaces of forms that will be reused. Renew form release coating as specified for new formwork.

B. Patch holes and defects in forms with materials and methods that will not be reflected in concrete.

C. Do no reuse forms with split, frayed, delaminated, or otherwise damaged facing material. Remove such material from the site.

END OF SECTION

(THIS PAGE LEFT BLANK INTENTIONALLY)

SECTION 03 15 00

CONCRETE ACCESSORIES

PART 1 - GENERAL

1.01 SECTION INCLUDES

A. Accessories for cast-in-place concrete.

1.02 REFERENCED SECTIONS

A. The following Sections are referenced in this Section

1. Section 01 33 00 – Submittals
2. Section 03 11 00 – Concrete Formwork
3. Section 03 20 00 – Concrete Reinforcement
4. Section 03 30 00– Cast-In-Place Concrete

1.03 DEFINITIONS

A. Construction Joints: When fresh concrete is placed against a concrete surface, with or without reinforcement, the joint between the two pours is called a construction joint.

B. Contraction Joints: Contraction joints are similar to construction joints except that the fresh concrete is not bonded to the hardened surface of the first pour. In addition, the hardened surface of the first pour is coated with a bond breaker.

C. Expansion Joints: Expansion joints allow the concrete to expand freely with changes in temperature by providing a space between the two pours. This space is obtained by placing premolded expansion joint material against the first pour, then removing this material after the second pour to create the space.

D. Control Joints: The function of the control joint is to provide a weaker plane in the concrete, where shrinkage cracks are likely to occur. The control joint is formed or saw-cut in the concrete.

1.04 SUBMITTALS

A. Comply with Section 01 33 00.

B. Product Data

1. Manufacturer's data for accessories, including installation and application instructions, and material safety data sheets.

1.05 PERFORMANCE REQUIREMENTS

A. Hydrophilic Waterstops: Designed to expand in the presence of water to form a watertight joint without damaging the concrete in which it is cast.

1.06 QUALITY ASSURANCE

A. Reference Standards

1. American Concrete Institute (ACI) – ACI 504R: Guide to Joint Sealants for Concrete Structures.

1.07 PRODUCT DELIVERY, STORAGE, AND HANDLING

A. Transport, store and handle concrete accessories according to manufacturer's written instructions, and such that damage, including weather damage, is prevented.

PART 2 - PRODUCTS

2.01 MATERIALS

A. Caulking Compound

1. Manufacturers: One of the following, or equal:

a. Dow Corning, 790 Silicone Building Sealant.

b. Bostik, Chem-Caulk 1250.

B. Joint Sealing Compound

1. Cold applied, field molded, nontoxic.

2. One or two component polysulfide sealant.

3. Conform to Federal Specification TT-S-00227E, Class A, Type 1 or Type 2.

4. Non-sag type for overhead vertical and sloping applications; self-leveling type elsewhere.

C. Preformed Expansion Joint Filler

1. Self-expanding cork type joint filler composed of granulated cork particles, resin-bonded into board form, compressed and dehydrated under heat and pressure and capable of expanding up to 140% of the original thickness after installation due to the re-absorption of moisture.

2. Conform to ASTM D 1752, Type III.

D. PVC Waterstops

1. Material: Extruded from an elastomeric polyvinyl chloride compound.

2. Type: Use center-bulb type waterstops unless alternative design is specifically indicated on the Drawings.

3. Physical properties of sheet material shall be as follows:

a. Minimum Tensile Strength per ASTM D638, Type IV: 1750 psi.

b. Ultimate Elongation per ASTM D638, Type IV: 350 percent.

c. Maximum Low Temperature Brittleness per ASTM D746: -35 degrees F.

4. Manufacturers: Greenstreak, Inc., Kirkhill Rubber Company, W.R. Grace, or equal.

E. Hydrophilic Waterstops

1. Swellable, polyurethane/butyl rubber waterproofing compound with adhesive backing for adhering to concrete surfaces.

2. Manufacturers: One of the following, or equal:

a. "Hydrotite" as manufactured by Greenstreak, Inc.

b. Adcor ES as manufactured by Grace Construction Products.

F. Plastic Crack Control Strips

1. Crack control (zip) strips used as joint formers shall be designed to provide positive control of transverse construction or expansion joints.

2. Plastic, two-part assembly designed to permit removal of the top portion after the concrete has hardened, thereby creating a clean, neatly defined void for application of caulk or sealant as specified.

3. Provide 1-inch, 1-1/2 inch, and 2-inch strips as applicable.

4. Manufactured by BoMetals, Inc. or equal.

PART 3 - EXECUTION

3.01 GENERAL

A. Locate construction joints in concrete at points indicated on the Drawings.

B. Concrete Formwork: In accordance with Section 03 11 00.

C. Concrete Reinforcement: In accordance with Section 03 20 00.

D. Cast-in-Place Concrete: In accordance with Section 03 30 00.

3.02 APPLICATION

A. Caulking Compound

1. Preparation of Joint: Clean joint surfaces immediately before application of caulk. Roughen and prime joint surfaces as recommended by the caulk manufacturer.

2. Application of Caulking Compound: Apply caulk according to the manufacturer's recommendations. Completely fill the joint groove around the entire perimeter of each opening.

3. Cleaning: Clean the surfaces of materials adjacent to sealed joints from smears of caulking compound or other soiling resulting from the caulk application.

B. Joint Sealing Compound

1. Conform to the requirements of ACI 504R.

2. Preparation of Joint: Dry joints by application of heat. Fill joints immediately following the curing period or as soon thereafter as weather conditions permit. Immediately before filling, clean the joint of all dust, dirt fragments, concrete or other objectionable material by a light air blasting or other approved methods.

3. Application of Cold Applied Joint Sealing Compound: Store each component of joint sealing compound in its respective container and unbroken until

immediately prior to usage. Mix joint compound to form a thick paste. Follow the manufacturer's written instructions for mixing and applying joint sealing compound.

C. Preformed Expansion Joint Filler

1. Install joint filler against walls, at interrupting objects or columns, and against abutting structures.

2. Install joint filler with top of filler 1/2 inch below concrete finish level.

3. Place cap over the expansion joint prior to placing concrete, remove cap after concrete has cured.

3.03 PVC WATERSTOPS

A. General Installation Requirements

1. Use type of waterstop indicated on the Drawings or specified in this Section.

2. Position waterstop across the concrete joint.

3. Make waterstops fully continuous for the extent of the joint, making splices as necessary to provide such continuity.

B. Splices

1. Utilize factory manufactured joints, tees, and crosses and field splice to straight lengths of waterstop.

2. Field Splices: Make splices in straight runs of waterstop by heat sealing edges of adjacent waterstop sections in accordance with the manufacturer's printed recommendations. Do not damage the waterstop material in the welding procedure.

3. Tensile Strength of Splice: Not less than 60 percent of the tensile strength of the parent material.

4. Maintain continuity of the waterstop ribs and center bulb through the splice.

C. Installation

1. Install waterstops in the vertical and horizontal construction joints and control joints as indicated on the Drawings.

2. Correctly position waterstops across the concrete joint by centering the waterstop within the joint.

3. Anchor the waterstops to maintain proper embedment and position in the concrete.

a. Using light wire ties on 12-inch centers that pass through the edge of the waterstop and are tied to the curtain of reinforcing steel.

b. Hold horizontal waterstops in place with continuous supports to which the top edge of the waterstop is be tacked.

4. Stop waterstops in vertical wall joints 6 inches from the top of the wall where such waterstop does not connect with any other waterstop and is not to be connected to for a future concrete placement.

D. Concrete Placement Around Waterstops

1. Thoroughly work the concrete in the vicinity of waterstops to insure maximum density and imperviousness of the concrete and to prevent the formation of air and rock pockets.

3.04 HYDROPHILIC WATERSTOPS

A. Install hydrophilic waterstop in accordance with manufacturer's recommendations.

B. Clean surfaces prior to installation.

C. On irregular surfaces and where necessary to provide a complete seal, apply waterstop in a bead of adhesive and allow to dry.

D. Center waterstop in the concrete joint and press waterstop firmly into place.

E. Secure waterstop using powder driven nails at 12 inches on centers.

F. Lap 3-inch at splices with full contact between joined surfaces.

END OF SECTION

(THIS PAGE LEFT BLANK INTENTIONALLY)

SECTION 03 20 00

CONCRETE REINFORCEMENT

PART 1 - GENERAL

1.01 SECTION INCLUDES

A. Reinforcing steel bars and associated accessories for use in cast-in-place concrete.

1.02 SUBMITTALS

A. Product Data:

1. Reinforcement: Submit reinforcing steel manufacturer's data.

B. Shop Drawings:

1. Submit reinforcing rebar fabrication drawings, prepared in accordance with ACI 315. Indicate list of materials, sizes, and dimensions.

2. Submit reinforcement placement drawings indicating bar size, spacing, layout, placement details, splicing lengths, and lap lengths. Placement drawings shall not consist of, or contain, reproductions of the Contract Drawings.

3. Review of Placement Drawings

a. Engineer's review of reinforcement placement drawings will be for general compliance with the Contract Documents regarding bar grade, size, spacing and configuration.

b. Bar dimensions and quantities will not be reviewed or checked.

c. Review of fabrication and placement drawings by the Engineer does not relieve the Contractor from responsibility for both the accuracy of the shop drawings and the correct placement of rebar in the field.

4. Do not fabricate or place rebar before the placement drawings have been reviewed and returned to the Contractor.

1.03 QUALITY ASSURANCE

A. Reference Standards:

1. American Concrete Institute (ACI):

a. ACI 315 – Details and Detailing of Concrete Reinforcement.

b. ACI 318 – Building Code Requirements for Structural Concrete.

c. ACI 301 – Specifications for Structural Concrete for Buildings.

2. American Society for Testing and Materials (ASTM):

a. ASTM A82 – Standard Specification for Steel Wire, Plain, for Concrete Reinforcement.

b. ASTM A185 – Specification for Steel Welded Wire Fabric, Plain, for Concrete Reinforcement.

c. ASTM A615 – Specification for Deformed and Plain Billet-Steel Bars for Concrete Reinforcement.

d. ASTM A706 – Standard Specification for Deformed and Plain Low-Alloy Steel Bars for Concrete Reinforcement.

3. American Welding Society (AWS) D1.4 – Structural Welding Code – Reinforcing Steel

4. Concrete Reinforcing Steel Institute (CRSI):

a. Manual of Standard Practice.

b. Recommended Practice for Placing Reinforcing Bars.

c. Recommended Practice for Placing Bar Supports, Specifications and Nomeclature.

1.04 PRODUCT DELIVERY, STORAGE AND HANDLING

A. Ship and store reinforcement bars of the same size and shape fastened in bundles with durable tags. Mark in a legible manner with waterproof markings showing the same designations as shown on the submitted placement drawings.

B. Store reinforcement off the ground, protect from moisture, and keep free from dirt, oil, and other injurious contaminants.

C. Protect reinforcement from rusting, deforming, kinking, foreign substances that will reduce bond, and other injury.

PART 2 - PRODUCTS

2.01 MATERIALS

A. Deformed Concrete Reinforcing Bars: ASTM A615, Grade 60.

B. Deformed Concrete Reinforcing Bars to be Field Bent or Welded: ASTM A706, Grade 60.

C. Welded Wire Fabric: Galvanized welded steel mesh conforming to ASTM A185, Grade 60. Furnish flat, not in roll.

D. Tie Wire: ASTM A82, No. 16 gauge or heavier, black or galvanized, soft or commercial grade steel tie wire.

E. Supports and Spacers: Metal accessories including spacers, chairs, ties and other devices necessary for proper placement, spacing, supporting and fastening reinforcement in place.

1. Conform to the CRSI “Manual of Standard Practice”.

2. Provide spacers, chairs, bolsters, and other devices to support and secure reinforcement in place.

3. Use concrete block supports for footing and slabs on grade.

4. Use stainless steel or plastic tip chairs for exposed finished concrete surfaces.

5. Plastic chairs shall be allowed for use in forms for pre-cast concrete segment construction.

2.02 SOURCE QUALITY CONTROL

A. Shop fabricate reinforcing steel to conform to the required shapes and dimensions, in accordance with CRSI standards. Field bending will not be permitted.

B. Cold bend reinforcing steel, and do not straighten or re-bend after the initial bending.

C. Bend bars around a revolving collar having a diameter not less than that recommended by the ACI 318. Fabricate hooks in conformance to ACI 318.

D. Do not damage in bending.

E. Do not use bars with kinks or improper bends.

F. Reinforcement reduced in section is not acceptable.

PART 3 - EXECUTION

3.01 PREPARATION

A. Before placing concrete, clean reinforcement of mortar, oil, grease, dirt, loose mill scale, loose rust, and any other coating of such character, including laitance that would reduce bonding to concrete. Reinforcing bars with a thin coating of rust resulting from short exposure to atmosphere will not be considered objectionable.

B. Remove concrete, curing compound, and other deleterious material from dowels and other projecting bars by wire brushing or sandblasting before bars are embedded in subsequent concrete placement.

C. Verify that items to be embedded in concrete are secured in place as required.

3.02 INSTALLATION OF REINFORCING STEEL

A. Firmly and securely hold reinforcing bars in position by wiring at intersections, and by using pre-cast concrete blocks or metal chairs, spacers, metal hangers, supporting wires, and other approved devices of sufficient strength to resist crushing under full load and to prevent displacement during concrete placing operations. Tie bar reinforcement with tie wire to prevent displacement during concrete placement.

B. Reinforcement bar support methods which leave marks or impressions on the finished concrete surface shall not be allowed.

C. Locate and place bar supports in accordance with CRSI and in sufficient number to prevent sagging of the rebar mat due to loads during construction.

D. Place reinforcing bars such that the minimum clear protective covering for reinforcement adjacent to concrete surfaces and minimum clear bar spacing is in accordance with the Drawings.

E. Do not place bars on layers of fresh concrete as the work progresses or adjust bars during the placing of concrete.

F. Bars may be moved as necessary to avoid interference with other reinforcement steel, conduits, or embedded items. If bars are moved more than one bar diameter, or enough to exceed the tolerances specified herein, the resulting arrangement of bars shall be as approved by the Engineer.

3.03 SPLICING

A. Lap Splices:

1. Furnish full length of reinforcement to the extent practicable. Splice bars as shown on the reviewed placement drawings.

2. Lap Lengths: In accordance with ACI 318, Section 12.15.1 for a Class B splice.

3. Splice reinforcing bars as indicated by lapping and securely wiring together.

4. Indicate splice locations on placement drawings. Stagger splice locations with no more than 50% of the bars spliced at any section. Mechanical splices may be substituted for contact lap splices, subject to approval by the Engineer. If mechanical splices are approved, install in accordance with manufacturer's requirements.

   a. Wall Reinforcing: Stagger splices for curtains of horizontal reinforcing a minimum of 3 feet with no more than 50% of the bars spliced in one location. Do not perform splicing in two opposing curtains of horizontal reinforcing in the same location. Lap splices of vertical reinforcing steel need not be staggered, unless otherwise indicated on the Drawings.

   b. Beam Reinforcing: Stagger splices in horizontally and vertically adjacent longitudinal reinforcing a minimum of the longest adjacent splice length with no more than 50% of the bars spliced in the same location.

5. Do not field weld reinforcement in lieu of lapping.

6. Lap welded wire fabric in accordance with ACI 318.

B. Mechanical Coupler Installation: Use mechanical couplers in the locations indicated on the Drawings or in locations requested by the Contractor and approved by the Engineer.

3.04 REINFORCEMENT AROUND OPENINGS

A. Whenever the conduit, piping, sleeves, bolts, hangers, boxes or other embedded items interfere with the proper placement of reinforcing steel as detailed, submit proposed reinforcement adjustment to the Engineer for review.

B. Provide trim bars around openings as indicated on the Drawings.

3.05 INSPECTION

A. Notify the Engineer not less than 48 hours before reinforcing steel inspection is required and at least 24 hours prior to the Contractor's intent to place concrete. Correct any errors or discrepancies note by Engineer's inspection before concrete is placed.

B. Do not place concrete prior to the Engineer's final inspection and approval of reinforcement installation.

C. Where formwork will cover reinforcement and make reinforcement inaccessible for inspection, notify the Engineer to inspect reinforcement installation not less than 48 hours before formwork is erected.

END OF SECTION

(THIS PAGE LEFT BLANK INTENTIONALLY)

SECTION 03 30 00

CAST-IN-PLACE CONCRETE

PART 1 - GENERAL

1.01 SECTION INCLUDES

A. Requirements for cast-in-place concrete work.

1.02 REFERENCED SECTIONS

A. The following Sections are referenced in this Section

1. Section 01 33 00 – Submittals

2. Section 03 39 00– Concrete Curing

1.03 SYSTEM DESCRIPTION

A. Design Criteria

1. Design mixes in accordance with the provisions of ACI 318 to produce concrete having durability, strength, density, temperature, and other characteristics as specified herein.

2. Design mixes to provide adequate workability to be placed, consolidated, and finished under the expected job conditions and in the configurations indicated on the Drawings.

B. Performance Requirements

1. Water Tightness: It is intent of this Section to produce concrete of homogeneous structure, which when hardened will have the required strength, watertightness, and durability.

a. It is recognized that some surface hairline cracks and crazing will develop in the concrete surfaces due to normal expansion and contraction expected from specified concrete mixes.

b. Joints have been positioned in structures as indicated on the Drawings and curing methods have been specified for the purpose of reducing the number and size of these expected cracks,

2. Tolerances: Tolerances shall be in accordance with ACI 318 and CRSI, unless otherwise noted.

C. Options

1. Concrete may be produced at the Project Site, or may be supplied by a commercial ready-mix concrete plant and delivered to the site using appropriate ready mix trucks.

D. Materials Testing Requirements

1. Sample and perform, off-site or on-site, concrete quality control testing. Complete the tests listed below, undertaken in conformance to the ASTM standard identified.

a. Aggregate Properties:

1) Moisture Content: In accordance with ASTM C566.

2) Specific Gravity and Absorption: In accordance with ASTM C127 and C128.

3) Gradation: In accordance with ASTM C136.

4) Practice for Sampling: In accordance with ASTM D75.

5) Testing in accordance with ASTM C1260 and ASTM C295 is to be performed by a certified testing laboratory retained by the Contractor.

b. Cement Properties:

1) Chemical Properties: In accordance with ASTM C150, Tables 1 and 2.

2) Physical Properties: In accordance with ASTM C150, Table 3.

3) False Set: In accordance with ASTM C150, Table 4.

c. Pozzolan/Fly Ash Properties:

1) Chemical Properties: In accordance with ASTM C311 and ASTM C618.

2) Physical Properties: In accordance with ASTM C311 and ASTM C618.

3) Testing of the fly ash and/or the fly ash and concrete mixture is required to provide test data confirming that the fly ash in combination with the cement complies with the specified strength requirements and is compatible with the other concrete additives.

d. Silica Fume Properties: Conform to the requirements of ASTM C1240.

e. Admixture Properties:

1) Air Entraining Admixtures: In accordance with ASTM C260.

2) Chemical Admixtures: In accordance with ASTM C494, Table 1.

f. Concrete Properties:

1) Temperature: In accordance with ASTM C1064.

2) Slump: In accordance with ASTM C143.

3) Air Content: In accordance with ASTM C173 or C231.

4) Unit Weight: In accordance with ASTM C138.

5) Compressive Strength: In accordance with ASTM C31 and C39.

E. Concrete Mixes

1. After acceptance of proposed mix designs, prepare trial batches of the accepted mix. Determine slump and prepare a minimum of 8 test cylinders.

a. Test 4 cylinders at 7 days and 4 cylinders at 28 days. Average compressive strength of cylinders tested at 28 days shall be equal to or greater than the specified compressive strength.

2. Where the Concrete Supplier has test records of the proposed mix design, this data may be used in lieu of preparing and testing trail batches. Test data shall be

comprised of at least 30 tests that span a period of not less than 45 calendar days. Establish the average compressive strength and standard deviation for the test data as described in ACI 318, Part 3, Chapter 5.

1.04 SUBMITTALS

A. Comply with Section 01 33 00.

B. Product Data

1. Manufacturer's information, including specifications, handling and storage recommendations, and material safety data sheets for manufactured products used.

2. Manufacturer's specifications with application and installation instructions for all proprietary materials and items, including admixtures, bonding agents, joint systems, and curing compounds.

3. Aggregates:

a. Source for both fine and coarse aggregate.

b. Proof of aggregates' compatibility with cement to be used, including data proving that no issues related to alkali/aggregate reactivity exists.

c. Performance history of the proposed aggregate to be used.

4. Cement:

a. Brand of Portland cement, type of cement, and plant of manufacture.

b. Type of supplementary cementitious material to be used in allowable, limited proportion to substitute for Portland cement.

c. Mill test results for cement.

d. Mill test results for supplementary cementitious materials.

e. Shipping receipts showing source or other proof of source for all cement and supplemental cementitious material.

f. Certifications shall include chemical and physical properties, specific gravity and false set information.

5. Admixtures, if used:

a. Documentation that shows admixtures have a history of demonstrable satisfactory performance on major public projects under equivalent conditions.

C. Concrete Mix Design Data

1. Submit concrete mix designs and supporting data at least 20 days in advance of scheduled start of any concrete work.

2. Mix Design Testing: Performed by a certified laboratory.

3. For each mix proposed for use:

a. Concrete mix supplier, mix design number, and supply plant location.

1) Concrete mix constituents, including specific gravity or weight per cubic yard, and absolute volume of each constituent.

2) Gradation of fine and coarse aggregates.

b. Concrete mix characteristics, including:

1) 7, 28 and 56 day compressive strengths.

2) Water/cementitious material ratio.

3) Percent entrained air.

4) Density.

5) Slump.

6) Type and content of additives.

c. Documentation of Average Strength:

1) Furnish report for concrete produced by the same plant to be supplying the project.

2) Furnish reports no more than 12 months old.

d. Drying shrinkage test data as determined in accordance with ASTM C157.

e. For Field Experience Method, furnish a minimum of ten test reports encompassing a period of not less than 60 days.

f. For Trial Batch Method, furnish a minimum of three trial mixtures with a minimum of three different cementitious material contents and a minimum of three different water/cementitious material ratios. Furnish a plot of compressive strength versus water/cementitious materials ratio.

D. Quality Control Submittals

1. Concrete Supplier's certificate of conformance to ASTM C94 requirements for concrete production facilities.

2. Ready-mix delivery tickets for each truck in accordance with ASTM C94.

1.05 QUALITY ASSURANCE

A. Supplier Qualifications: A firm experienced in manufacturing ready-mixed concrete and that complies with ASTM C94 requirements for production facilities and equipment.

B. Source Limitations: Use the same brand of cement from the same manufacturer's plant, obtain aggregate from one source, and obtain admixtures through one source from a single manufacturer.

PART 2 - PRODUCTS

2.01 READY MIXED CONCRETE

A. Ready Mixed Concrete: Prepared in accordance with ASTM C94, Option A.

2.02 MATERIALS

A. Portland Cement: ASTM C150, Type II.

1. At Contractor's option, Type HE cement may be used to accelerate development of compressive strength.

B. Aggregates

1. Fine Aggregates

a. Clean, durable natural sand or crushed stone conforming to ASTM C33.

b. Materials Passing 200 Sieve: Not more than 4 percent.

c. Limit deleterious substances in accordance with ASTM C33, Table 1 with coal and lignite not greater than 0.5 percent.

d. Sand equivalent shall not be less than 80 when tested according to ASTM D2419.

e. Meet the following requirements when tested in conformance with the specified ASTM test methods:

1) Soundness (ASTM C88): Weighted average loss after 5 cycles not to exceed 10 percent when tested with sodium sulfate.

2) Bulk Specific Gravity (ASTM C127): On the basis of saturated surface-dry aggregate not less than 2.60.

3) Absorption (ASTM C127): Not to exceed 3 percent.

4) Potential Reactivity (ASTM C289): Only use aggregates considered innocuous in the Work.

5) Potential Reactivity (ASTM C227): Only use aggregates considered innocuous in the Work.

2. Coarse Aggregate

a. Natural gravels, combination of gravels and crushed gravels, crushed stone, or combination of these materials containing no more than 15 percent flat or elongated particles (long dimension more than five times the short dimension).

b. Materials Passing 200 Sieve: 0.5 percent maximum.

c. Meet the following requirements when tested in conformance with the specified ASTM test methods:

1) Resistance to Abrasion (ASTM C131): For the loss for aggregate size range 3/4-inch to 3/16inch after 100 revolutions and 500 revolutions do not exceed 10 percent and 35 percent, respectively. Include within the test sample seven parts of Grading B and three parts of Grading C.

2) Resistance to Abrasion (ASTM C535): For the loss for aggregate size range 1-1/2-inches to 3/4-inch (Grading 3) after 200 revolutions and 1000 revolutions do not exceed 10 percent and 35 percent, respectively.

3) Soundness (ASTM C88): Weighted average loss after 5 cycles not to exceed 10 percent when tested with sodium sulfate.

4) Bulk Specific Gravity (ASTM C127): On the basis of saturated surface-dry aggregate not less than 2.60.

5) Absorption (ASTM C127): Not to exceed 3 percent.

6) Potential Reactivity (ASTM C289): Only use aggregates considered innocuous in the Work.

C. Admixtures:

1. Use: Admixtures may be included in the concrete mix designs to improve the workability of the concrete or enhance other aspects of concrete, provided the specified strengths and other characteristics of the concrete can be achieved and maintained.

2. Limitations: Do not use admixtures that contribute water-soluble chloride ions exceeding those permitted in hardened concrete. Do not use calcium chloride or admixtures containing calcium chloride.

3. Admixtures:

a. Air-Entraining: Conform to requirements of ASTM C260.

b. Water-Reducing: Conform to requirements of ASTM C494, Type A or D.

c. Superplasticizers: ASTM C494, Type F or G.

d. Fly Ash: ASTM C618, Class C or F.

e. Color Pigments: Inert mineral or metal oxide pigments, natural or synthetic; resistant to lime and other alkalies.

D. Water: Use clean, potable water, free from impurities detrimental to concrete.

2.03 CONCRETE MIXES

A. Provide concrete consisting of the Types listed in the table below.

B. Provide concrete mixes with at least the minimum weight of cementitious materials per cubic yard specified herein, regardless of the fact that the strength specified may be obtained with lesser amounts of cement.

C. Concrete mixes shall conform to the following table:

Concrete Class and Location	Compressive Strength, psi	Max Water Content Ratio by Weight	Minimum Total Cementitious Material Content (lb/yd^3)	Silica Fume, Percent by weight of Total Cementitious Material	Maximum Size of Coarse Aggregates, inches	Slump Range Per ASTM C143, inches
Type A	4000	0.48	590	5-10	1	4“±1“
Type B	3000	0.55	560	Not Specified	3/4	5“±1“
Type C	2500	0.62	425	5-10	1-1/2 (pavement) 3/4 (all other applications)	5“±1“

Notes:

1. The Contractor has the option of providing concrete with Pozzolan as a cement replacement to the limits prescribed on the table. Pozzolan may comprise up to 15% of the minimum specified cement content and may be increased to a maximum of 30% of the specified cement content, provided the mix design contains at least 80% of the minimum specified cement content.
2. Use Type A concrete for all structures. Use Type B concrete for sidewalks, curbs, fence post foundations, and sign foundations. Use Type C concrete for thrust blocks, reinforced concrete pavement and fill concrete where indicated on the Drawings.

D. Maximum Drying Shrinkage: 0.05% for Type A Concrete.

E. Air content: 4±1.5 percent entrained air as measured by the Pressure Method per ASTM C231, at the time when the mix is discharged from the truck.

F. Mixing: Minimum 70 and maximum 270 revolutions of mixing drum. Non-agitating equipment is not allowed.

PART 3 - EXECUTION

3.01 PLACING CONCRETE

A. Place concrete in accordance with ACI 301.

B. Before Placing Concrete

1. Check reinforcing steel for proper placement and correct discrepancies.

2. Remove excessive rust, mill scale, dirt, oil and other material from rebar that may adversely affect bonding to concrete.

3. Remove water from excavation and debris and foreign material from forms.

C. Before depositing new concrete on existing concrete, clean surface using sandblast or other mechanical means to obtain a 1/4 inch rough profile, and apply epoxy bonding agent in accordance with the manufacturer's instructions.

D. Concrete Placement

1. Place within 1-1/2 hours after adding cement to mix.

2. Place concrete without segregation or loss of ingredients and without splashing forms or steel above.

3. Place concrete continuously in horizontal layers with fresh concrete deposited over previous placements that are still plastic. Deposit concrete in layers not exceeding 18 inches in thickness.

4. Do not place concrete that has surface-dried, partially hardened, or contains foreign material.

5. Do not drop concrete vertically greater than five feet except where chutes or other suitable equipment is provided to prevent segregation.

6. Placement Using Tremie Methods: Place concrete in or under water in conformance to the recommendations of ACI 304R.

7. If truck is being sampled, place no more than 1/2 cubic yard until tests demonstrate concrete conforms to temperature, air content, and slump requirements.

8. Deposit concrete in or close to its final position as to prevent segregation due to rehandling or flowing.

9. Integrate fresh concrete with that already placed; no re-tempering of concrete already placed will be allowed. After concrete has taken an initial set, protect forms from jarring and do not place any strain on ends of projecting reinforcement.

10. Remove splash or accumulation of hardened or partially hardened concrete. Protect contact faces of forms for exposed concrete from splash during placing of adjacent concrete.

11. Discontinue casting when depositing is interrupted longer than 45 minutes. In this event, cut back concrete and provide construction joints; clean forms and reinforcing as necessary to receive concrete at later time.

E. Hot Weather

1. Prepare ingredients, mix, place, cure, and protect in accordance with ACI 305R.

2. Maintain concrete temperature below 80 degrees F at time of placement, or furnish test data or provide other proof that admixtures and mix ingredients do not produce flash set plastic shrinkage, or cracking due to heat of hydration. Ingredients may be cooled before mixing to maintain fresh concrete temperatures at 80 degrees F or less.

3. Make provisions for windbreaks, shading, fog spraying, sprinkling, ice, or wet cover, or other means to provide concrete with temperature specified.

4. Maximum allowable temperature differential between reinforcing steel and concrete: Not greater than 20 degrees F at the time of concrete placement.

3.02 CONSOLIDATION

A. Consolidate concrete by mechanical vibration in conformance with the recommendations of ACI 309R.Vibrate concrete as follows:

1. Apply vibrator at uniform spacing over the entire area of the placement. Space the distance between insertions such that the influence zones of each insertion overlap.

2. Thoroughly work concrete around reinforcement and embedded items and into corners of forms to eliminate air and rock pockets. Apply close enough to forms to vibrate surface effectively but not damage form surfaces.

3. Vibrate until concrete becomes uniformly plastic.

4. Vibrator must penetrate fresh placed concrete and into previous layer of fresh concrete below.

3.03 CONSTRUCTION JOINTS

A. Locate as indicated on the Drawings or as proposed by Contractor and approved by the Engineer.

B. Maximum Spacing Between Construction Joints: 40 feet.

C. Clean joints, exposed reinforcement, and forms by sandblasting or water blasting prior to placing concrete.

3.04 PROTECTION AND CURING

A. Comply with Section 03 39 00.

B. Protect fresh concrete from direct rays of sunlight, drying winds, and wash by rain.

C. Keep concrete slabs continuously wet for a 7 day period. Intermittent wetting is not acceptable.

D. Use curing compound only where approved by Engineer. Cure formed surfaces with curing compound applied in accordance with manufacturer's directions as soon as forms are removed and finishing is complete.

1. Do not use curing compound on concrete surfaces that will be painted.

3.05 CONCRETE REPAIR

A. Contact Engineer prior to performing concrete repair.

B. Remove and replace concrete damaged by freezing.

C. Repair defective areas by removing unconsolidated areas, rock pockets, and other defective areas, then patch and repair using same material as the concrete with no coarse aggregate. Match color and texture of the repair to the surrounding area.

3.06 FIELD QUALITY CONTROL

A. Concrete Samples

1. Provide concrete for making composite samples for testing slump, air content, and for making cylinders for determination of compressive strength.

2. Prepare samples in accordance with ASTM C172. Select trucks or batches of concrete on a random basis.

3. Samples may be obtained at the discharge chute of the truck or at the point of discharge into forms.

B. Sampling Frequency: One composite sample for each 100 cubic yards of structural concrete, or fraction thereof, of each concrete mixture placed in any one day.

C. Evaluation will be in accordance with ACI 301, Chapter 17 and Specifications.

D. Slump tests and concrete cylinders will be made by the Owner at the time concrete is placed in the field. Owner will handle cured test cylinders, transport to the testing laboratory and pay testing costs.

E. Concrete Testing

1. Obtain four test cylinders.

2. Test cylinders will be tested for compressive strength tests in conformance with ASTM C39.

3. Test cylinders will be tested at 7 days, 15 days, 28 days and 56 days.

F. Enforcement of Compressive Strength Requirements

1. Compressive strength of concrete will be considered acceptable if the following conditions are satisfied:

a. Averages of all sets of 3 consecutive strength test results are greater or equal to the specified compressive strength.

b. No individual strength test (average of 2 cylinders) falls below specified compressive strength by more than 500 pounds per square inch.

2. Whenever one, or both, of the conditions stated above is not satisfied, provide additional curing of affected portion of structure, then obtain test cores from the affected area.

   a. Obtain 3 test cores in accordance with ASTM C42 and ACI 318.

   b. Concrete will be considered acceptable if the average compressive strength of the 3 test cores is equal to at least 90 percent of the specified 28-day compressive strength and no single core is less than 80 percent of the specified 28-day compressive strength.

   c. Concrete will be designated as defective when the specified conditions are not achieved.

   d. Fill core holes with concrete.

3. Engineer may require the Contractor to strengthen defective concrete by means of additional concrete, additional reinforcing steel, or replacement of defective concrete, all of the Contractor's expense.

END OF SECTION

SECTION 03 39 00

CONCRETE CURING

PART 1 - GENERAL

1.01 SECTION INCLUDES

A. Requirements for curing of concrete.

1.02 REFERENCED SECTIONS

A. The following Section is referenced in this Section:

1. Section 01 33 00 – Submittals

1.03 SUBMITTALS

A. Comply with Section 01 33 00.

B. Product Data: Provide manufacturers' data for the following products:

1. Evaporation retardant.

2. Curing compound.

C. Description of proposed curing methods.

1.04 QUALITY ASSURANCE

A. Reference Standards:

1. American Society for Testing and Materials (ASTM):

a. C309 – Standard Specification for Liquid Membrane-Forming Compounds for Curing concrete.

b. C131 – Standard Specification for Liquid Membrane-Forming Compounds having Special Properties for Curing and Sealing Concrete.

c. C171 – Standard Specification for Sheet Materials for Curing Concrete

PART 2 - PRODUCTS

2.01 MATERIALS

A. Curing Compound

1. Water-based, high solids content non-yellowing curing compound meeting requirements of ASTM C309 and C131.

2. Moisture Loss: 0.40 kg/square m/72 hours maximum.

3. Capable of meeting moisture retention at manufacturer's specified application rate.

4. Manufacturers and Products:

a. Chemrex, Inc., Shakopee, MN; Masterkure.

b. Euclid Chemical Co., Cleveland, OH; Super Diamond Clear VOX.

c. WR Meadows, Inc., Hampshire, IL; VOCOMP-30.

d. Vexcon Chemical, Inc.; Philadelphia, PA; Starseal 1315.

e. Dayton Superior; Safe Cure and Seal 30 percent.

B. Curing Blankets: Non-staining blankets, consisting of burlap or cotton mats, rugs or carpets.

C. Curing Paper: Non-staining waterproof paper conforming to ASTM C171.

D. Evaporation Retardant

1. Optional: Fluorescent color tint that disappears completely upon drying.

2. Manufacturers and Products:

a. Master Builders Co., Cleveland, OH; CONFILM.

b. Euclid Chemical Co., Cleveland, OH; Eucobar.

E. Water: Clean and potable, containing less than 500 ppm of chlorides.

PART 3 - EXECUTION

3.01 CONCRETE CURING

A. General

1. Minimum Concrete Cure Time: 7 days.

2. Cure concrete that is to receive coatings, painting, cementitious material, or other similar finishes, or where solvent-based coatings are not permitted, by using either water curing procedures or plastic membrane curing procedures.

B. Curing Concrete Walls

1. Cure concrete walls using one of the following methods:

a. Method 1: Leave concrete forms in place and keep entire surfaces of forms and concrete wet for 7 days.

b. Method 2: Apply curing compound, where allowed, immediately after removal of forms.

c. Method 3: Continuously sprinkle with water 100 percent of exposed surfaces for seven days starting immediately after removal of forms.

2. When forms are left in place, do not loosen form ties during the curing period.

C. Curing Concrete Slabs

1. Cure concrete slabs using one of the following methods:

a. Method 1: Keep concrete wet by water ponding or continuous water sprinkling for 7 days.

b. Method 2: Apply curing compound, where allowed, immediately after concrete finishing is completed.

c. Cover with burlap or cotton mats and keep continuously wet for 7 days.

d. Method 3: Cover with plastic membrane, seal joints and edges with sand and keep concrete moist under the plastic membrane for 7 days.

e. Other agreed upon method that will keep moisture present and uniform at all times on surface of slabs.

2. Where water curing for slabs during cold weather is not possible, utilize a curing compound. Apply at manufacturer's recommended coverage per gallon.

3. Protect slabs during cold weather with plastic sheets or other material inside required heated enclosure if foot traffic is permitted on slabs.

3.02 CURING COMPOUND APPLICATION

A. Apply curing compound to concrete surface immediately after removal of forms or completion of finishing work.

B. Maintain curing compound on the concrete surface for 7 days.

C. After curing period is complete, remove curing compound within construction joints by sandblasting prior to subsequent placement of concrete.

D. Apply compound using sprayer. Apply compounds in at least 2 coats with the second coat applied in a direction that is 90 degrees to the direction that the first coat was applied.

E. Apply coating in sufficient quantity that the compound can be removed by scraping after 24 hours and so that the concrete is uniform in appearance.

F. When the curing period is complete, remove applied curing compound on concrete surfaces exposed to view by sandblasting so that the finished concrete has a natural color and consistent and uniform appearance.

3.03 EVAPORATION RETARDANT APPLICATIONS

A. When environmental conditions may result in rapid evaporation of moisture from the surface of freshly placed concrete, spray evaporation retardant onto surface of concrete immediately after screeding.

1. Environmental conditions that may result in rapid loss of moisture include:

a. Low humidity.

b. Windy conditions.

c. High temperature.

B. Reapply retardant as needed to ensure a continuous moist surface until final finishing is completed.

END OF SECTION

(THIS PAGE LEFT BLANK INTENTIONALLY)

SECTION 03 60 00

GROUT

PART 1 - GENERAL

1.01 SECTION INCLUDES

A. Grout for uses other than masonry construction, including:

1. Dry pack grout
2. Cement grout
3. Nonshrink grout, non-metallic
4. Nonshrink grout, metallic
5. Pressure grout
6. Epoxy grout
7. Polymer concrete

1.02 REFERENCED SECTIONS

A. The following Sections are referenced in this Section

1. Section 01 33 00 – Submittals
2. Section 03 30 00– Cast-in-Place Concrete

1.03 SUBMITTALS

A. Conform to Section 01 33 00.

B. Product Data

1. Manufacturer’s product data of all materials proposed for use in the Work.
2. Manufacturer’s literature containing instructions and recommendations on the mixing, handling, placement and appropriate uses for each type of grout used in the Work

C. Laboratory Test Reports

1. Test reports on previously tested materials shall be accompanied by the manufacturer's statement that the previously tested material is the same type, quality, manufacture, and make as that proposed for use in this project.
2. Test reports are required for the following:

a. Cement
b. Aggregates
c. Bonding compounds
d. Admixtures

D. Certifications that all grout used on the project are free of chlorides or other chemicals that may cause corrosion.

1.04 QUALITY ASSURANCE

A. Field tests

1. Compression test specimens will be taken during construction from the first placement of each type of grout and at intervals thereafter as selected by the Owner to insure compliance with the Contract Documents.

2. The test specimens will be obtained, tested, and paid for by the Owner except the Contractor will be charged the cost of any additional tests on work which does not meet the Specifications.

3. Compression tests for grout and non-shrink grout:

a. Per ASTM C109.

b. Obtain three samples.

c. At a minimum test at 7 and 28 days.

4. Compression test for epoxy grout:

a. Per ASTM C579 Method B.

b. Obtain three samples.

c. At a minimum test at 7 days.

5. Remove and replace all grout that does not meet the Specification requirements at no additional cost to the Owner.

B. Pre-installation demonstration and training.

1. Coordinate and pay for demonstration and training sessions by the grout manufacture where pre-installation demonstration and training is indicated in the grout schedule before grout installation is started.

2. Conduct training with the Contractor's employees who will be doing the grout work in attendance.

3. Include demonstration and training on mixing, preparation, application and curing each type of grout to be used.

4. Obtain test specimens of each grout type and conduct compression testing at 1, 3, and 28 days for each type of grout to be used. Demonstration and training testing to be paid for by the Contractor.

5. Demonstration and training sessions may be conducted on actual project placements such as baseplates and tie holes.

6. Mix sufficient amount of each grout type to complete the equivalent of one 12-inc by 12-inch baseplate and a set of 6 test specimens.

7. Transport test cubes to an independent test laboratory, obtain test reports, and submit test results to the Owner.

PART 2 - PRODUCTS

2.01 GENERAL

A. Use grouts indicated in the grout schedule whether called for on Drawings or not.

2.02 CEMENT GROUT

A. Portland cement ASTM C150 Type II or Type V

B. Low alkali, containing less than 0.60 percent alkalies.

C. Aggregate

1. Nonreactive and washed before use.

2. Fine Aggregate

a. Hard, dense, durable particles of either sand or crushed stone regularly graded from coarse to fine and shall conform to ASTM C33 as modified herein.

b. Gradation (ASTM C136): 100 percent by weight will pass a standard No. 8 mesh sleeve and no less than 45 percent by weight will pass a standard No. 40 mesh sieve.

c. Tolerance: The average of three consecutive tests fall within the limits listed below:

US standard sieve size	Permissible variation in individual tests, percent
30 or coarser	2.0
50 or finer	0.5

3. Meet the requirements of the following specifications:

Test	Test Method	Requirements
Organic Impurities	ASTM C40	Color lighter than standard
Amount of Material Passing No. 200 Sieve	ASTM C117	3% maximum by weight
Soundness	ASTM C88	10% maximum loss with sodium sulfate
Sand Equivalent	ASTM D2419	Minimum 80

4. Admixtures

a. General

1) Compatible with the grout.

2) Do not use calcium chloride or admixtures containing calcium chloride.

3) Follow the manufacturer's recommendations for use.

4) Add separately to the grout mix.

b. Water Reducing Retarder

1) ASTM C494 Type D.

2) Manufactured by:

a) Master Builders MasterSet R 300,

b) Sika Corporation Plastiment,

c) Or equal.

c. Lubricant for Cement Pressure Grouting

1) Manufactured by:

a) Intrusion Prepakt Intrusion Aid,

b) Sika Intraplast N,

c) Or equal.

5. Water

a. Free from oil and deleterious amounts of acids, alkalies, and organic materials;

b. Do not use water containing more than 500 mg/1 of chlorides as Cl, nor more than 800 mg/1 of sulfates as SO_4;

c. Do not use water containing impurities that may cause a change of more than 25 percent in the setting time of the cement nor a reduction of more than five percent in the compressive strength of the grout at 14 days when compared with the result obtained with distilled water.

d. Do not use water for curing that discolors the grout.

D. Drypack Grout

1. A mixture of approximately one part cement, 1-1/2 to 2 parts sand, water reducing retarder, and sufficient water to make a stiff workable mix.

2. Consistency: Plastic and moldable but does not flow.

E. Cement Grout

1. Mixture of one part cement, two parts sand, proportioned by volume, admixtures for pressure grouting, and sufficient water to form workable mix.

2. Maximum slump: 4 inches.

2.03 PREPACKAGED GROUT

A. Non-shrink Grout

1. Cementitious non-shrink, non-metallic grout

2. Conform to ASTM C827 and C1107.

3. Manufactured by:

a. Sika Corporation, SikaGrout 212

b. Five Star Products, Inc. Five Star Grout

c. Chemrex Inc. Masterflow 928

d. Euclid Chemical Co. High-Flow Grout

e. Or equal.

B. Epoxy grout bonding/grouting adhesive

1. Multi-purpose, two-component, 100% solids, moisture-tolerant, structural adhesive.

2. Conform to ASTM C881, Types I, II and V, Grade-2.

3. Manufactured by:

a. Sika Corporation, Sikadur 32, Hi-Mod

b. Chemrex Inc. MasterFlow 649

c. Or equal.

C. Epoxy grout paste adhesive

1. High modulus, two-component, moisture insensitive, 100 percent solids, thermo-setting modified polyamid epoxy compound.

2. Paste form consistency capable of not sagging in horizontal or overhead anchoring configurations.

3. Conform to ASTM C881 Type 1, Grade 3

4. Heat deflection temperature: In excess of 130 degrees F.

5. Manufactured by:

a. Chemrex Inc. Concresive Paste LPL

b. Sika Corporation Sikadur Hi-Mod Series

c. Adhesive Technology Corporation Ultrabond 1350

d. Or equal,

D. Epoxy grout for pressure grouting

1. Two-component, 100% solids, moisture-tolerant, epoxy adhesive. Low-viscosity, high-strength adhesive formulated specifically for injection grouting.

2. Consistency as necessary to achieve complete penetration in hairline cracks and larger.

3. Conform to ASTM C881 Type 1 and 2, Grade 1.

4. Manufactured by:

a. Sika Corporation Sikadur 52

b. Chemrex Inc. Concresive LV1

c. Adhesive Technology Corporation SLV 300 series

d. Or equal.

E. Polymer concrete grout

1. Liquid binder and dry aggregate mixed together to make a mortar or grout of a consistency as necessary for the application.

2. Liquid binder: Chemical and oil resistant, stress relieved, low modulus, moisture insensitive, two-component epoxy-resin compound.

3. Consistency similar to lightweight oil for proper mixing with aggregate.

4. Conform to ASTM C881 Type 3 Grade 1,

5. Aggregate:

   a. Size and consistency compatible with recommendations of manufacturer of liquid binder for intended application.

   b. Keep aggregate oven dry in sealed packages until time of mixing.

6. Manufactured by:

   a. Sika Corporation Sikadur Lo-Mod series

   b. Adhesive Engineering Concresive 1470

   c. Adhesive Technology Corporation 400 series

   d. Or equal.

2.04 PRESSURE GROUTING EQUIPMENT

A. Mixer and holdover agitator tanks

B. Designed to place grout at pressures up to 50 psi.

C. Provide gages to indicate pressure grout pressure during application.

D. Provide mixer with a meter capable of indicating to one-tenth of a cubic foot the volume of grout used.

PART 3 - EXECUTION

3.01 GENERAL

A. Conduct mixing, surface preparation, handling, placing, consolidation, and curing for prepackaged grouts according to the instructions and recommendations of the grout manufacturer.

B. Mix grouts in a mortar mixer.

C. Bonding compound for use with grout is specified in Section 03 30 00.

D. Provide primer, if required, for polymer concrete, per manufacturer's recommendation.

3.02 DRYPACK GROUT

A. Roughen surfaces to be built up with drypack grout by brushing

B. Clean, and coat surface with bonding compound in conformance to Section 03 30 00 before the application of the grout.

C. Apply drypack grout immediately following the application of the bonding compound in layers to the required thickness.

D. Finish the surface smooth.

E. Where construction joints are necessary, slope face of construction joints and clean and wet the existing grout before application is resumed.

F. Cure drypack grout in accordance with Section 03 30 00.

G. Do not place drypack grout during freezing weather unless adequate protection is provided.

3.03 CEMENT GROUT

A. Except for the specialized equipment for pressure grouting, mixing and placing apparatus use equipment similar to that normally used for cast-in-place concrete.

B. Mix grout for a period of at least 1 minute.

3.04 NONSHRINK GROUT

A. Place in accordance with manufacturer's instructions.

3.05 EPOXY GROUT

A. Prime surface to be grouted in accordance with the grout manufacturer's instructions.

3.06 PRESSURE GROUTING

A. Prior to grouting, Wash clean surfaces and holes to be grouted, prior to grouting.

B. Washing is not required for grouting soil voids outside pipe cylinders or casing pipes.

C. Once commenced, continue grouting to completion without stoppage.

D. In case of breakdown of equipment, wash out the grouting system sufficiently to ensure fresh grout and adequate bond and penetration will occur upon restarting the grouting operation.

E. Maintain grout pressure until grout has set.

3.07 GROUT SCHEDULE

A. Use grout type indicated in the table below unless otherwise indicated.

Grout	Application
Drypack Cement Grout	Built-up surfaces, setting miscellaneous metal items and minor repairs.
Cement Grout	Filling nonbearing portions of equipment pads and pressure grouting.
Non-shrink Grout	Bearing surfaces of machinery and equipment bases, column base plates, and bearing plates, and setting handrail, guardrail, or fence posts in pipe sleeves.
Epoxy Grout	Reinforcing steel set in grout, repairing cracks in concrete, concrete repair.
Pressure Grout	Repairing cracks in concrete.
Polymer Cement Grout	Repair of concrete floors, patching.

END OF SECTION

(THIS PAGE LEFT BLANK INTENTIONALLY)

SECTION 05 50 01

ANCHOR BOLTS AND ANCHORING DEVICES

PART 1 - GENERAL

1.01 SECTION INCLUDES

A. Anchor bolts, concrete anchors, adhesive anchors, and other anchoring devices.

1.02 REFERENCED SECTIONS

A. The following Section is referenced in this Section

1. Section 01 33 00 – Submittals

1.03 SUBMITTALS

A. Comply with Section 01 33 00.

B. Product Data: Manufacturer's data for nuts, bolts, concrete anchors, chemical anchors and other fasteners.

C. Catalog data and ICC reports for each type of anchor bolt.

1.04 QUALITY ASSURANCE

A. For applications that require special inspection in accordance with building codes, coordinate the progress of the Work with the required inspection activities.

PART 2 - PRODUCTS

2.01 MATERIALS

A. Unless otherwise specified or indicated on the Drawings, materials of construction for anchoring devices shall conform to the following:

1. Anchor bolts and other anchoring devices, nuts and washers installed indoors: Type 304 stainless steel.

2. Anchor bolts and other anchoring devices, nuts and washers installed outdoors or in locations exposed to wastewater: Type 316 stainless steel.

a. Locations exposed to wastewater includes:

1) Below tops of walls of water-containing structures.

2) Underside of roof, slab or walkways of enclosed water-containing structures.

3) Dry side of walls on water-containing structures.

2.02 CAST-IN-PLACE ANCHOR BOLTS

A. Locations for use of cast-in-place anchor bolts:

1. In locations indicated on the Drawings.

2. To anchor engine-driven equipment and equipment with motors 3 horsepower and larger.

B. Cast-in-Place Anchor Bolts

1. Material: Stainless steel conforming to ASTM A320.

2. Minimum Length of Bolt: As indicated on the Drawings. When not indicated, provide bolt length such that the length of the embedded anchor is at least 10 bolt diameters.

3. Minimum length of 90-degree hook: 4 bolt diameters.

2.03 CONCRETE ANCHORS

A. Concrete Anchors: Drilled in place wedge-type anchors with threaded stud body, stainless steel expansion clip, nut and washer.

B. Materials: Type 304 or Type 316 stainless steel, depending upon installed location.

C. Code Compliance: Test in accordance with, and comply with requirements of, ASTM E488 and ICC-ES AC193.

D. Manufacturers: One of the following or equal:

1. Hilti Kwik Bolt 3.

2. ITW Redhead, Trubolt Wedge Anchor.

3. Dewalt Fasteners, Power-Stud SD4 or SD6.

4. Simpson Strong Tie, Strong-Bolt 2 Wedge Anchors.

2.04 STUDS

A. Material: Conforming to ASTM A108 with 50,000 pounds per square inch minimum yield strength, and 60,000 pounds per square inch minimum tensile strength.

B. Manufacturers: One of the following or equal:

1. Nelson Stud Welding Company, S3L Shear Connectors or H4L Concrete Anchors.

2. Stud Welding Products, Headed Concrete Anchors and Shear Connectors or Concrete Anchors.

2.05 ADHESIVE ANCHORS

A. Applications: Use for bonding threaded rods and concrete reinforcing bars to hardened concrete and grouted cement masonry. Do not use in overhead applications, in chlorine gas environments, or where anchor may be exposed to machine oil or diesel oil.

B. Code Compliance: Test in accordance with, and comply with requirements of, ASTM E488 and ICC-ES AC58.

C. Materials

1. Epoxy Adhesive: Two component, injectable epoxy adhesive.

2. Concrete Reinforcing Bars: Grade 60.

3. Threaded Rods: Type 304 stainless steel all-thread rod conforming to ASTM F593.

D. Manufacturers: One of the following or equal:

1. Hilti HVA Adhesive Anchor System.

2. ITW Redhead G6+ Adhesive Anchoring System.

3. Dewalt Fasteners PE1000+ Epoxy Anchoring System.

4. Simpson Strong Tie, SET-XP Epoxy Adhesive.

PART 3 - EXECUTION

3.01 GENERAL ANCHORING REQUIREMENTS

A. Use equipment shop drawings, anchorage layout drawings, and anchor bolt layout templates to accurately position anchor bolts.

B. Install anchor bolts, concrete anchors and other anchoring devices with at least 2 threads projecting beyond the nut, but no more than 1/2-inch projecting beyond the nut.

C. Prior to installing nuts, coat threads of stainless steel bolts with material to prevent galling of threads.

1. Manufacturers: One of the following or equal:

a. Never Seez Compound Corporation, Never-Seez.

b. Oil Research, Inc., WLR No. 111.

D. Tighten nuts on anchor bolts, concrete anchors and other anchoring devices to the "snug-tight" condition, defined as tightness attained by a few impacts of an impact wrench or the full effort of a man using an ordinary wrench.

3.02 CAST-IN-PLACE ANCHOR BOLTS

A. Do not use expansion type concrete anchors or adhesive anchors as substitution for cast-in-place anchor bolts.

B. Accurately place anchor bolts to be embedded in concrete within the formwork and perpendicular to surface from which they will project. Secure in correct position while concrete is placed.

C. Do not allow anchor bolts to touch reinforcing steel. Where anchor bolts are within 1/4 inch of reinforcing steel, isolate with a minimum of 4 wraps of 10 mil polyvinyl chloride tape in area adjacent to reinforcing steel.

D. In anchoring machinery bases subject to heavy vibration, use 2 nuts, with 1 serving as a locknut.

E. Where bolts are indicated on the Drawings for future use, first coat thoroughly with non-oxidizing wax, then turn nuts down full depth of thread and neatly wrap exposed thread with waterproof polyvinyl tape.

F. Where indicated on the Drawings, set anchor bolts in metal sleeves having inside diameter approximately 2 inches greater than the bolt diameter and a minimum of 10 bolt diameters deep. Fill sleeves with grout when equipment is grouted in place.

3.03 CONCRETE ANCHORS AND ADHESIVE ANCHORS

A. Cast-in-place anchor bolts may be used in place of concrete anchors and adhesive anchors at Contractor’s option.

B. Installation

1. Drill holes using concrete drill bits and impact type drill motors. Hole diameter shall be in accordance with the manufacturer's recommendations.

2. Clean drilled hole using compressed air to dislodge and remove drilling dust.

3. Accurately locate concrete anchors and set anchors with axis perpendicular to surfaces from which they will project.

4. Do not disturb adhesive anchors until cure time has elapsed.

5. Unless otherwise indicated on the Drawings or as required by structural calculations prepared by the equipment supplier, comply with minimum embedment lengths identified in the following table.

Minimum Embedment Lengths for Concrete and Adhesive Anchors

Diameter of Anchor or Bar, inches	Embedment Length for Concrete Anchors, inches	Embedment Length for Adhesive Anchors or Reinforcing Bars
1/4	1-3/4	As indicated on the Drawings
3/8	1-7/8	
1/2	2-1/4	
5/8	2-3/4	
3/4	3-1/4	
(1) Provide longer embedment where otherwise indicated		

END OF SECTION

SECTION 05 55 05

MISCELLANEOUS METALWORK

PART 1 - GENERAL

1.01 SECTION INCLUDES

A. Miscellaneous metalwork, which consists of custom fabricated metalwork.

1.02 REFERENCED SECTIONS

A. The following Sections are referenced in this Section

1. Section 01 33 00 – Submittals
2. Section 03 30 00 – Cast-in-Place Concrete

1.03 QUALITY ASSURANCE

A. General

1. Shop and field welding shall conform to the requirements of the AISC Steel Construction Manual, 15th Edition.
2. The use of salvaged, reprocessed or scrap materials will not be permitted.
3. Perform welding of structural metals with welders who have current American Welding Society (AWS) certificate for the type of welding to be performed.
4. Owner may use gamma ray, magnetic particle, dye penetrant or other aids to visually inspect or examine any weld.
5. Contractor shall bear costs of retests on defective welds.
6. Contractor shall also bear costs in connection with qualifying welders.

1.04 SUBMITTALS

A. Comply with Section 01 33 00.

B. Include the following items:

1. Manufacturer's catalog data confirming capacity and removal efficiency.
2. Shop drawings of members to be fabricated.
3. Parts list with materials of construction.

1.05 DELIVERY, STORAGE AND HANDLING

A. Packing and Shipping: Package in a manner that will protect painted surfaces, galvanized surfaces and surfaces with fusion bonded epoxy.

B. Store metalwork off the ground, protect from moisture, keep free from dirt, oil and other injurious contaminants.

PART 2 - PRODUCTS

2.01 MATERIALS

A. Nonstructural steel bars, angles, clips, and similar items: ASTM A36 or ASTM A283.

B. Iron castings: ASTM A48.

C. Structural steel tubing: ASTM A500, Grade B.

D. Steel bolts (except flanges and anchor bolts): ASTM A307, Grade A.

E. Stainless steel: ASTM A320, Type 304.

F. Aluminum cover plate: 6061-T6, ASTM B632.

2.02 FABRICATION

A. General

1. Unless otherwise specified punch holes 1/16-inch larger than the nominal size of the bolts.

2. If needed because of the thickness of the metal, subpunch and ream, or drill holes.

3. Perform fabrication including cutting, drilling, punching, threading and tapping required for miscellaneous metal or adjacent work prior to hot-dip galvanizing.

B. Seat Angles, Supports and Brackets

1. If seat angles pass over slide gate guides, weld to the guides.

2. If seat angles for grating, supports for floor plates, clips for precast panels and brackets for piping are specified as steel, hot-dip galvanized after fabrication.

C. Power Driven Pins

1. Power driven pins may be used in interior locations of nonprocess areas.

2. Material: heat-treated steel alloy per AISI 1062 or 4063 and zinc-plated.

3. Provide pins with capped or threaded heads capable of transmitting the loads the shanks are required to support.

4. If pins are connected to steel, provide with longitudinal serrations around the circumference of the shank.

5. Provide complete information describing pin capacities and connections to the Construction Manager.

6. Obtain approval of the Construction Manager prior to the use of pins at all locations.

D. Iron Castings

1. Provide where specified on the drawings.

2. If castings weigh less than 100 pounds, hot-dip galvanize after machining.

3. If castings weigh greater than 100 pounds, hot-dip galvanize where specified.

E. Other Miscellaneous Metalwork

1. Provide other miscellaneous metalwork including embedded and non-embedded steel metalwork, hangers and inserts as specified on the drawings.

2. Where indicated hot-dip galvanize steel material after fabrication in accordance with ASTM A123.

2.03 PERFORMANCE REQUIREMENTS

A. Structural Design:

1. Standard Weight Design Requirements: Design vault door with 1/4-inch aluminum plate, reinforced to withstand a live load of 300 pounds per square foot with a maximum deflection of 1/150 of the span.

2. Traffic Loading Design Requirements: Design vault door with 1/4-inch aluminum diamond pattern plate, reinforced to withstand an H-20 highway load with a maximum deflection of 1/150 of the span.

B. Operation: Smooth and easy opening and closing with controlled operation throughout the entire arc of opening and closing, regardless of ambient temperature. Provide lifting mechanism that retards downward motion of the cover when closing to prevent quick closing and slamming.

2.04 ACCESS HATCHES

A. Sizes and Design Loading Requirements: As indicated on the Drawings and specified herein. Sizes indicated reflect the clear opening required for each vault door.

B. Access Hatch Door

1. Double leaf or single leaf as indicated on the Vault Door Schedule.

2. Provide each leaf with a minimum of two compression spring lifting mechanisms designed to prevent the entry of dirt and foreign matter into compression spring housing.

3. Provide a recessed locking mechanism and flush lift handles.

4. Leafs: Diamond pattern, milled aluminum, 1/4-inch thickness, ASTM B221, Alloy 5086. Reinforce as necessary to comply with design loading requirements.

5. Leaf Gaskets: EPDM or neoprene gasket, mechanically attached to the vault door frame.

6. Type 316 stainless steel hardware throughout.

C. Hatch Hinges

1. Heavy forged aluminum with 1/4-inch diameter stainless steel hinge pins provided, designed to pivot so the cover does not protrude into the channel frame.

2. Specifically designed for horizontal installation.

3. Through bolted to the covers with tamperproof Type 316 stainless steel lock bolts and through bolted to the frame with Type 316 stainless steel bolts and locknuts.

D. Lifting Mechanisms:

1. Compression spring-type mechanism within a telescoping tube.

2. Provide automatic hold-open arms with release handles.

3. Attach lower tube of lifting mechanism to a flanged support shoe fastened to a formed 1/4” gusset support plate.

E. Locking Mechanisms:

1. Exterior: Provide removable turn/lift handle with spring loaded ball detent to open the cover. Protect latch release by a flush, gasketed, removable screw plug.

2. Interior: Provide Type 316 stainless steel snap lock with fixed handle mounted on the underside of the cover.

F. Frame: Aluminum channel frame, 1/4-inch thickness, ASTM B221 alloy 6063-T5, with a perimeter anchor flange with anchor tabs around the perimeter.

G. Provide a 1-1/2-inch drainage coupling, zinc plated and chromate sealed, in a corner of the channel frame.

H. Finish

1. Mill-finish with one of the following applied to the exterior of the frame:

a. Carboline “Bitumastic Super Service Black,”

b. Tnemec “46-499 Heavy Duty Black”.

c. Valspar “High-Build Bitumastic Coating 35-T-10”.

I. Manufacturers”

1. Bilco;

2. Thompson Fabrication Company;

3. Halliday Products, Inc.;

J. Fall Protection Grate

1. Underlying aluminum safety grates to allow inspection of the wet well while providing fall-through protection. Safety grates:

a. Designed to withstand a live load of 300 lb/ft2 with a maximum deflection of 1/150 of the span.

b. Fabricated from aluminum flat bars.

c. Openings between flat bars shall be not less than 4” x 4” to facilitate visual inspection.

d. Provided with a hinging system that will lock the grate in the 90° open position.

e. Provide an aluminum open arm with red vinyl grip.

f. Safety grates shall be safety orange color.

2.05 ALUMINUM FLOOR AND COVER PLATES (CHECKERED PLATE)

1. Provide hinged cover plates as detailed on Drawings and set flush with surrounding floor.
2. Limit single piece of floor and cover plate weight to 80 pounds maximum unless specifically detailed otherwise.
3. Provide lifting handles at two ends of the cover plates.
4. Provide a hole in the checkered plate to accommodate the stem of the slide gate. Coordinate with gate submittal.
5. Manufacturers, one of the following or equal:
   a. Alcoa C-102 aluminum tread plate.
   b. Reynolds diamond tread plate.

2.06 ACCESS HATCH AND CHECKERED PLATE SCHEDULE

Location	Qty	Opening Size	Design	Safety Grates	Style
Influent Pump Station: PMP-110-03, PMP-110-04, & PMP-110-05, See Drawing M111	3	48”x72”	Traffic Weight	Required	Double Leaf
Influent Pump Station: PMP-110-01, PMP-110-02 See Drawing M111	2	48”x30”	Traffic Weight	Required	Single Leaf
Influent Pump Station, SLG-110-00, See Drawing M111	1	48”x30”	Standard Weight	Required	Checkered Plate

PART 3 - EXECUTION

3.01 INSTALLATION

A. General

1. Fieldwork is not permitted on galvanized items.
2. Drilling of bolts or enlargement of holes to correct misalignment will not be allowed.
3. Protect dissimilar metals from galvanic corrosion by means of pressure tapes, coatings or isolators.
4. Metalwork to be embedded in concrete:
   a. Position accurately and hold in correct position while the concrete is placed; or, if specified, form recesses or blockouts in the concrete.
   b. Clean thoroughly all surfaces of metalwork in contact with or embedded in concrete.

c. If approved by the Construction Manager, recesses may be neatly cored in the concrete after it has attained its design strength and the metalwork grouted in place.

d. Construct embedments as specified in Section 03 30 00.

B. Seat Angles, Supports and Guides

1. Set seat angles for grating and supports for floor plates so that the floor and grating and floor plates are flush with the floor.

C. Power Driven Pins

1. Retain a craftsman who is certified by the manufacturer to set power driven pins.

2. Drive pins in one initial movement by an instantaneous force that has been selected to attain the required penetration.

3. Comply with the following:

Material penetrated by pin	Penetrated material's minimum thickness	Penetration of pin's shank in supporting material	Minimum space from center of pin's shank to edge of penetrated material	Minimum pin spacing
Concrete	16D	6D minimum	14D	20D
Steel	1/4 inch	Steel thickness plus 2D	4D	7D
Where D = pin shank diameter.				

4. When required by the Construction Manager, perform pullout tests to prove the effectiveness of the anchorage and the capacity of the pin.

3.02 ACCESS HATCH INSTALLATION

A. Install in accordance with the manufacturer's instructions.

B. Install vault door with frame set level and flush with the surrounding surface.

C. Coat the exterior surfaces of door frames with a bituminous paint.

D. Connect a 1-1/2-inch diameter copper drain pipe to the drainage coupling on the hatch frame and route the drain pipe to the nearest drain.

3.03 CLEANING

A. After installation, clean and touch damaged surfaces of shop-primed metals with the same material used for the shop coat.

END OF SECTION

SECTION 06 10 00

ROUGH CARPENTRY

PART 1 - GENERAL

1.01 SECTION INCLUDES

A. Structural dimension lumber framing.

B. Exposed timber structural framing.

C. Rough opening framing for doors, windows, and roof openings.

D. Sheathing.

E. Roofing nailers.

F. Preservative treated wood materials.

G. Miscellaneous framing and sheathing.

H. Communications and electrical room mounting boards.

I. Concealed wood blocking, nailers, and supports.

1.02 RELATED REQUIREMENTS

A. Section 03 30 00 - Cast-in-Place Concrete: Setting anchors in concrete.

B. Section 05 55 05 Miscellaneous Metals: Miscellaneous steel connectors and support angles for wood framing.

C. Section 07 25 00 - Weather Barriers: Water-resistive barrier over sheathing.

D. Section 07 62 00 - Sheet Metal Flashing and Trim: Sill flashings.

1.03 REFERENCE STANDARDS

A. ASTM A153/A153M - Standard Specification for Zinc Coating (Hot-Dip) on Iron and Steel Hardware 2016a.

B. ASTM A653/A653M - Standard Specification for Steel Sheet, Zinc-Coated (Galvanized) or Zinc-Iron Alloy-Coated (Galvannealed) by the Hot-Dip Process 2020.

C. ASTM E84 - Standard Test Method for Surface Burning Characteristics of Building Materials 2021a.

D. AWC (WFCM) - Wood Frame Construction Manual for One- and Two-Family Dwellings 2018.

E. AWPA U1 - Use Category System: User Specification for Treated Wood 2021.

F. PS 1 - Structural Plywood 2009 (Revised 2019).

G. PS 2 - Performance Standard for Wood Structural Panels 2018.

H. PS 20 - American Softwood Lumber Standard 2021.

I. WWPA G-5 - Western Lumber Grading Rules 2021.

1.04 SUBMITTALS

A. See Section 01 33 00 - Submittals, for submittal procedures.

B. Product Data: Provide technical data on insulated sheathing, wood preservative materials, and application instructions.

C. Structural Composite Lumber: Submit manufacturer's published structural data including span tables, marked to indicate which sizes and grades are being used; if structural composite lumber is being substituted for dimension lumber or timbers, submit grading agency structural tables marked for comparison.

D. ABAA Field Quality Control Submittals: Submit third-party reports of testing and inspection required by ABAA QAP.

E. Manufacturer's Certificate: Certify that wood products supplied for rough carpentry meet or exceed specified requirements.

F. ABAA Manufacturer Qualification: Submit documentation of current evaluation of proposed manufacturer and materials.

G. ABAA Installer Qualification: Submit documentation of current contractor accreditation and current installer certification. Keep copies of all contractor accreditation and installer certification on site during and after installation. Present on-site documentation upon request.

1.05 QUALITY ASSURANCE

A. Air Barrier Association of America (ABAA) Quality Assurance Program (QAP); www.airbarrier.org/#sle:

1. Installer Qualification: Use accredited contractor, certified installers, evaluated materials, and third-party field quality control audit.

2. Manufacturer Qualification: Use evaluated materials from a single manufacturer regularly engaged in air barrier material manufacture. Use secondary materials approved in writing by primary material manufacturer.

1.06 DELIVERY, STORAGE, AND HANDLING

A. General: Cover wood products to protect against moisture. Support stacked products to prevent deformation and to allow air circulation.

B. Fire Retardant Treated Wood: Prevent exposure to precipitation during shipping, storage, or installation.

PART 2 - PRODUCTS

2.01 GENERAL REQUIREMENTS

A. Dimension Lumber: Comply with PS 20 and requirements of specified grading agencies.

1. Species: Coast Region Douglas Fir, unless otherwise indicated.

2. If no species is specified, provide any species graded by the agency specified; if no grading agency is specified, provide lumber graded by any grading agency meeting the specified requirements.

3. Grading Agency: Any grading agency whose rules are approved by the Board of Review, American Lumber Standard Committee (www.alsc.org) and who provides grading service for the species and grade specified; provide lumber stamped with grade mark unless otherwise indicated.

B. When possible, provide sustainably harvested woods.

C. When possible, provide wood harvested within a 500 mile (805 km) radius of the project site.

2.02 DIMENSION LUMBER FOR CONCEALED APPLICATIONS

A. Grading Agency: Western Wood Products Association; WWPA G-5.

B. Sizes: Nominal sizes as indicated on drawings, S4S.

C. Moisture Content: 19% at the time of framing and less than 16% at the time of closing framing..

D. Stud Framing; Plates and Headers: (2 by 2 through 2 by 6 (50 by 50 mm through 50 by 150 mm)):

1. Species: Coast Region Douglas Fir.

2. Grade: No. 2 unless noted otherwise on the drawings.

E. Miscellaneous Framing, Blocking, Nailers, Grounds, and Furring:

1. Lumber: S4S, No. 2 or Standard Grade.

2.03 STRUCTURAL COMPOSITE LUMBER

A. Structural Composite Lumber: Factory fabricated beams, headers, columns, and wood I-Joists of sizes and types indicated on drawings; structural capacity as published by manufacturer.

1. Columns: Use laminated veneer lumber, laminated strand lumber, or parallel strand lumber with manufacturer's published E (modulus of elasticity): 1,800,000 psi (12,410 MPa), minimum.

2. Beams: Use laminated veneer lumber, laminated strand lumber, or parallel strand lumber with manufacturer's published E (modulus of elasticity): 1,800,000 psi (12,410 MPa), minimum.

3. Manufacturers:

a. Boise Cascade Company: www.bc.com/#sle.

b. Weyerhaeuser Company: www.weyerhaeuser.com/#sle.

c. Redbuilt; www.redbuilt.com..

d. Or equal.

e. Substitutions: See General Conditions 7.06, Substitutes.

2.04 CONSTRUCTION PANELS

A. Roof Sheathing: Any PS 2 type, rated Structural I Sheathing.

1. Bond Classification: Exterior.

2. Grade: Species Group 2 or better.

3. Span Rating: 40/20.

4. Performance Category: 5/8 PERF CAT.

5. Edges: Square if blocked or supported by clips or tongue and Groove

B. Wall Sheathing: Any PS 2 type.

1. Bond Classification: Exterior.

2. Grade: Group 2 or better..

3. Span Rating: 24 32/16.

4. Performance Category: 1/2 PERF CAT.

5. Edge Profile: Square edge.

C. Communications and Electrical Room Mounting Boards: PS 1 A-D plywood, or medium density fiberboard; 3/4 inch (19 mm) thick; flame spread index of 25 or less, smoke developed index of 450 or less, when tested in accordance with ASTM E84.

D. Other Applications:

1. Non-Structural Plywood Concealed From View But Located Within Exterior Enclosure: PS 1, C-C Plugged or better, Exterior grade.

2. Non-Structural Plywood Exposed to View But Not Exposed to Weather: PS 1, A-D, or better.

3. Other Non-Structural Locations: PS 1, C-D Plugged or better.

2.05 ACCESSORIES

A. Fasteners and Anchors:

1. Metal and Finish: Hot-dipped galvanized steel complying with ASTM A153/A153M for high humidity and preservative-treated wood locations, unfinished steel elsewhere.

2. Drywall Screws: Bugle head, hardened steel, power driven type, length three times thickness of sheathing.

3. Anchors: Epoxy adhesive with screen tube type for anchorage to hollow masonry; expansion shield and lag bolt type for anchorage to solid masonry or concrete; Bolt or ballistic fastener for anchorages to steel; or as indicated on the drawings.

B. Die-Stamped Connectors: Hot dipped galvanized steel, sized to suit framing conditions.

1. For contact with preservative treated wood in exposed locations, provide minimum G185 (Z550) galvanizing complying with ASTM A653/A653M.

2. Provide connectors manufactured by Simpson Strong Tie.

3. Or equal

4. Substitutions: See General Conditions 7.06, Substitutes.

C. Joist Hangers: Hot dipped galvanized steel, sized to suit framing conditions.

1. For contact with preservative treated wood in exposed locations, provide minimum G185 (Z550) galvanizing complying with ASTM A653/A653M.

2. Provide joist hangers manufactured by Simpson Strong Tie.

3. Or equal

4. Substitutions: See General Conditions 7.06, Substitutes.

D. Sill Gasket on Top of Foundation Wall: 1/4 inch (6 mm) thick, plate width, closed cell plastic foam from continuous rolls.

E. Sill Flashing: As specified in Section 07 62 00.

F. Water-Resistive Barrier: As specified in Section 07 25 00.

2.06 FACTORY WOOD TREATMENT

A. Treated Lumber and Plywood: Comply with requirements of AWPA U1 - Use Category System for wood treatments determined by use categories, expected service conditions, and specific applications.

1. Preservative-Treated Wood: Provide lumber and plywood marked or stamped by an ALSC-accredited testing agency, certifying level and type of treatment in accordance with AWPA standards.

B. Preservative Treatment:

PART 3 - EXECUTION

3.01 PREPARATION

A. Where wood framing bears on cementitious foundations, install full width sill flashing continuous over top of foundation, lap ends of flashing minimum of 4 inches (100 mm) and seal.

B. Install sill gasket under sill plate of framed walls bearing on foundations; puncture gasket cleanly to fit tightly around protruding anchor bolts.

C. Coordinate installation of rough carpentry members specified in other sections.

3.02 INSTALLATION - GENERAL

A. Select material sizes to minimize waste.

B. Reuse scrap to the greatest extent possible; clearly separate scrap for use on site as accessory components, including: shims, bracing, and blocking.

C. Where treated wood is used on interior, provide temporary ventilation during and immediately after installation sufficient to remove indoor air contaminants.

3.03 FRAMING INSTALLATION

A. Set structural members level, plumb, and true to line. Discard pieces with defects that would lower required strength or result in unacceptable appearance of exposed members.

B. Make provisions for temporary construction loads, and provide temporary bracing sufficient to maintain structure in true alignment and safe condition until completion of erection and installation of permanent bracing.

C. Install structural members full length without splices.

D. Comply with member sizes, spacing, and configurations indicated, and fastener size and spacing indicated, but not less than required by applicable codes and AWC (WFCM) Wood Frame Construction Manual.

E. Install horizontal spanning members with crown edge up and not less than 1-1/2 inches (38 mm) of bearing at each end.

F. Construct double joist headers at roof openings; use metal joist hangers unless otherwise detailed.

G. Provide bridging at mid-span. Fit solid blocking at ends of members.

H. Frame wall openings with two or more studs at each jamb; support headers on cripple studs.

3.04 BLOCKING, NAILERS, AND SUPPORTS

A. Provide framing and blocking members as indicated or as required to support finishes, fixtures, specialty items, and trim.

B. In framed assemblies that have concealed spaces, provide solid wood fireblocking as required by applicable local code, to close concealed draft openings between floors and between top story and roof/attic space; other material acceptable to code authorities may be used in lieu of solid wood blocking.

C. In walls, provide blocking attached to studs as backing and support for wall-mounted items, unless item can be securely fastened to two or more studs or other method of support is explicitly indicated.

D. Where ceiling-mounting is indicated, provide blocking and supplementary supports above ceiling, unless other method of support is explicitly indicated.

E. Provide the following specific non-structural framing and blocking:

1. Cabinets and shelf supports.
2. Wall brackets.
3. Handrails.
4. Grab bars.
5. Towel and bath accessories.
6. Wall-mounted door stops.
7. Chalkboards and marker boards.

8. Wall paneling and trim.

9. Joints of rigid wall coverings that occur between studs.

3.05 ROOF-RELATED CARPENTRY

A. Coordinate installation of roofing carpentry with deck construction, framing of roof openings, and roofing assembly installation.

3.06 INSTALLATION OF CONSTRUCTION PANELS

A. Roof Sheathing: Secure panels with long dimension perpendicular to framing members, with ends staggered and over firm bearing.

1. At long edges provide solid edge blocking where joints occur between roof framing members where noted or detailed.

2. Nail panels to framing; staples are not permitted.

B. Wall Sheathing: Secure with long dimension parallel or perpendicular to wall studs, with ends over firm bearing, using nails, screws, or staples.

1. Place water-resistive barrier horizontally over wall sheathing, weather lapping edges and ends.

C. Communications and Electrical Room Mounting Boards: Secure with screws to studs with edges over firm bearing; space fasteners at maximum 24 inches (610 mm) on center on all edges and into studs in field of board.

1. At fire-rated walls, install board over wall board indicated as part of the fire-rated assembly.

2. Where boards are indicated as full floor-to-ceiling height, install with long edge of board parallel to studs.

3. Install adjacent boards without gaps.

3.07 TOLERANCES

A. Framing Members: 1/4 inch (6 mm) from true position, maximum.

B. Variation from Plane (Other than Floors): 1/4 inch in 10 feet (2 mm/m) maximum, and 1/4 inch in 30 feet (7 mm in 10 m) maximum.

3.08 CLEANING

A. Waste Disposal: Comply with the requirements of Section 01 57 19 – Environmental Controls.

1. Comply with applicable regulations.

2. Do not burn scrap on project site.

3. Do not burn scraps that have been pressure treated.

4. Do not send materials treated with pentachlorophenol, CCA, or ACA to co-generation facilities or “waste-to-energy” facilities.

B. Do not leave any wood, shavings, sawdust, etc. on the ground or buried in fill.

C. Prevent sawdust and wood shavings from entering the storm drainage system.

END OF SECTION

SECTION 07 21 00

THERMAL INSULATION

PART 1 - GENERAL

1.01 SECTION INCLUDES

A. Board insulation at over roof deck, over roof sheathing, and exterior wall behind exterior wall finish.

B. Batt insulation in exterior wall construction.

C. Batt insulation for filling perimeter window and door shim spaces and crevices in exterior wall and roof.

1.02 RELATED REQUIREMENTS

A. Section 06 10 00 - Rough Carpentry: Supporting construction for batt insulation.

B. Section 07 25 00 - Weather Barriers: Separate air barrier and vapor retarder materials.

C. Section 09 21 16 - Gypsum Board Assemblies: Acoustic insulation inside walls and partitions.

1.03 REFERENCE STANDARDS

A. ASTM C518 - Standard Test Method for Steady-State Thermal Transmission Properties by Means of the Heat Flow Meter Apparatus 2021.

B. ASTM C578 - Standard Specification for Rigid, Cellular Polystyrene Thermal Insulation 2019.

C. ASTM C612 - Standard Specification for Mineral Fiber Block and Board Thermal Insulation 2014 (Reapproved 2019).

D. ASTM C665 - Standard Specification for Mineral-Fiber Blanket Thermal Insulation for Light Frame Construction and Manufactured Housing 2017.

E. ASTM E84 - Standard Test Method for Surface Burning Characteristics of Building Materials 2021a.

1.04 SUBMITTALS

A. See Section 01 33 00 - Submittals for submittal procedures.

B. Product Data: Provide data on product characteristics, performance criteria, and product limitations.

1.05 FIELD CONDITIONS

A. Do not install insulation adhesives when temperature or weather conditions are detrimental to successful installation.

PART 2 - PRODUCTS

2.01 APPLICATIONS

A. Insulation Over Wood Stud Framed Walls, Continuous: Mineral fiber board.

B. Insulation in Wood Framed Walls: Batt insulation

C. Insulation Over Roof Deck: Polyisocyanurate board.

2.02 FOAM BOARD INSULATION MATERIALS

A. Extruded Polystyrene (XPS) Board Insulation: Complies with ASTM C578 with either natural skin or cut cell surfaces.

1. Type and Compressive Resistance: Type VI, 40 psi (276 kPa), minimum.

2. Flame Spread Index (FSI): Class A - 0 to 25, when tested in accordance with ASTM E84.

3. Smoke Developed Index (SDI): 450 or less, when tested in accordance with ASTM E84.

4. Type and Thermal Resistance, R-value (RSI-value): Type IV, 5.0 (0.88) per 1 inch (25.4 mm) thickness at 75 degrees F (24 degrees C) mean temperature.

5. Manufacturers:

a. Dow Chemical Company; STYROFOAM HIGHLOAD 40: www.dowbuildingsolutions.com/#sle.

b. Kingspan Insulation LLC; GreenGuard XPS Type IV, 25 psi: www.kingspan.com/#sle .

c. Owens Corning Corporation; FOAMULAR Extruded Polystyrene (XPS) Insulation: www.ocbuildingspec.com/#sle .

d. Or Equal.

e. Substitutions: See General Conditions 7.06, Substitutes.

2.03 FIBERBOARD INSULATION MATERIALS

A. Mineral Fiberboard Insulation installed exterior of sheathing: Rigid or semi-rigid mineral fiber, ASTM C612 or ASTM C553; unfaced flame spread index of 0 (zero) when tested in accordance with ASTM E84.

1. Smoke Developed Index: 450 or less, when tested in accordance with ASTM E84.

2. Board Size: Largest size possible to cover areas shown on plans.

3. Board Thickness: 1 inch (25 mm) or as needed to achieve R-value shown on plans.

4. Thermal Resistance: R-value (RSI-value) of 4.3 (0.76) per inch at 75 degrees F (24 C), minimum, when tested according to ASTM C518.

5. Manufacturers:

a. ROCKWOOL (ROXUL, Inc); ROCKBOARD 80: www.rockwool.com/#sle.

b. Or Equal.

c. Substitutions: : See General Conditions 7.06, Substitutes.

2.04 BATT INSULATION MATERIALS

A. Mineral Fiber Batt Insulation: Flexible or semi-rigid preformed batt or blanket, complying with ASTM C665; friction fit; unfaced flame spread index of 0 (zero) when tested in accordance with ASTM E84.

1. Smoke Developed Index: 0 (zero), when tested in accordance with ASTM E84.

2. Thermal Resistance: R-value (RSI-value) of 24 .

3. Manufacturers:

a. ROCKWOOL (ROXUL, Inc); COMFORTBATT: www.rockwool.com/#sle .

b. Or Equal.

c. Substitutions: : See General Conditions 7.06, Substitutes.

2.05 ACCESSORIES

A. Insulation Fasteners: Appropriate for purpose intended and per insulations manufacturer's written instructions..

PART 3 - EXECUTION

3.01 EXAMINATION

A. Verify that substrate, adjacent materials, and insulation materials are dry and that substrates are ready to receive insulation.

B. Verify substrate surfaces are flat, free of honeycomb, fins, irregularities, or materials or substances that may impede adhesive bond.

3.02 BOARD INSTALLATION AT EXTERIOR WALLS

A. Install boards horizontally on walls.

1. Install in running bond pattern.

B. Cut and fit insulation tightly to protrusions or interruptions to the insulation plane.

3.03 BOARD INSTALLATION OVER LOW SLOPE ROOF DECK

A. Installation of board insulation over low slope roof deck as specified in Section 07 41 13 Metal Roof Panels.

B. Board Installation Over Roof Deck, General:

1. See applicable roofing specification section for specific board installation requirements.

2. Ensure vapor retarder is clean and dry, continuous, and ready for application of roofing system.

3. Fasten insulation to deck in accordance with roofing manufacturer's written instructions and applicable Factory Mutual requirements.

4. Do not apply more insulation than can be covered with roofing on the same day.

3.04 BATT INSTALLATION

A. Install insulation in accordance with manufacturer's instructions.

B. Install in exterior wall spaces without gaps or voids. Do not compress insulation.

C. Trim insulation neatly to fit spaces. Insulate miscellaneous gaps and voids.

D. Fit insulation tightly in cavities and tightly to exterior side of mechanical and electrical services within the plane of the insulation.

END OF SECTION

SECTION 07 25 00

WEATHER BARRIERS

PART 1 - GENERAL

1.01 SECTION INCLUDES

A. Air Barriers: Materials that form a system to stop passage of air through exterior walls, joints between exterior walls and roof, and joints around frames of openings in exterior walls.

1.02 RELATED REQUIREMENTS

A. Section 03 30 00 - Cast-in-Place Concrete: Vapor retarder under concrete slabs on grade.

B. Section 07 62 00 - Sheet Metal Flashing and Trim: Metal flashings installed in conjunction with weather barriers.

C. Section 07 92 00 - Joint Sealants: Sealing building expansion joints.

D. Section 09 21 16 - Gypsum Board Assemblies: Water-resistive barrier under exterior cladding.

1.03 DEFINITIONS

A. Weather Barrier: Assemblies that form either water-resistive barriers, air barriers, or vapor retarders.

B. Air Barrier: Air tight barrier made of material that is relatively air impermeable but water vapor permeable, both to the degree specified, with sealed seams and with sealed joints to adjacent surfaces. Note: For the purposes of this specification, vapor impermeable air barriers are classified as vapor retarders.

C. Vapor Retarder: Air tight barrier made of material that is relatively water vapor impermeable, to the degree specified, with sealed seams and with sealed joints to adjacent surfaces.

1. Water Vapor Permeance: For purposes of conversion, 57.2 ng/(Pa s sq m) = 1 perm.

D. Water-Resistive Barrier: Water-shedding barrier made of material that is moisture resistant, to the degree specified, intended to be installed to shed water without sealed seams. Correctly installed exterior air barrier membranes are inherently water resistive.

1.04 REFERENCE STANDARDS

A. ASTM D1970/D1970M - Standard Specification for Self-Adhering Polymer Modified Bituminous Sheet Materials Used as Steep Roofing Underlayment for Ice Dam Protection 2021.

B. ASTM E96/E96M - Standard Test Methods for Gravimetric Determination of Water Vapor Transmission Rate of Materials 2022.

C. ASTM E1745 - Standard Specification for Plastic Water Vapor Retarders Used in Contact with Soil or Granular Fill under Concrete Slabs 2017.

D. ASTM E2178 - Standard Test Method for Determining Air Leakage Rate and Calculation of Air Permeance of Building Materials 2021a.

1.05 FIELD CONDITIONS

A. Maintain temperature and humidity recommended by the materials manufacturers before, during and after installation.

PART 2 - PART 2 PRODUCTS

2.01 WEATHER BARRIER ASSEMBLIES

A. Air Barrier:

1. On outside surface of sheathing of exterior walls use air barrier sheet, mechanically fastened type.

2.02 AIR BARRIER MATERIALS (WATER VAPOR PERMEABLE AND WATER-RESISTIVE)

A. Air Barrier Sheet, Mechanically Fastened:

1. Air Permeance: 0.004 cfm/sq ft (0.02 L/(s sq m)), maximum, when tested in accordance with ASTM E2178.

2. Water Vapor Permeance: 5 perms (286 ng/(Pa s sq m)), minimum, when tested in accordance with ASTM E96/E96M Procedure A (Desiccant Method) at 73.4 degrees F (23 degrees C).

3. Ultraviolet (UV) and Weathering Resistance: Approved in writing by manufacturer for up to 180 days of weather exposure.

4. Surface Burning Characteristics: Flame spread index of 25 or less, and smoke developed index of 50 or less, when tested in accordance with ASTM E84.

5. Seam and Perimeter Tape: Polyethylene self adhering type, mesh reinforced, 2 inches (50 mm) wide, compatible with sheet material; unless otherwise specified.

6. Manufacturers:

a. DuPont de Nemours, Inc; Tyvek Commercial Wrap with Tyvek Fluid Applied Flashing - Brush Formulation, Tyvek Fluid Applied Flashing and Joint Compound, FlexWrap NF, StraightFlash, StraightFlash VF, Tyvek Wrap Caps, and Tyvek Tape: www.dupont.com/#sle.

b. Fortifiber Building Systems Group; WeatherSmart: www.fortifiber.com/#sle

c. Fortifiber Building Systems Group; WeatherSmart Drainable: www.fortifiber.com/#sle

d. Fortifiber Building Systems Group; WeatherSmart Commercial: www.fortifiber.com/#sle

e. Kingspan Insulation LLC; GreenGuard RainDrop Building Wrap: www.trustgreenguard.com/#sle

f. Kingspan Insulation LLC; GreenGuard MAX Building Wrap: www.trustgreenguard.com/#sle

g. VaproShield, LLC; WrapShield IT - Integrated Tape: www.vaproshield.com/#sle

h. VaproShield, LLC; RevealShield IT - Integrated Tape: www.vaproshield.com/#sle

i. Or equal.

j. Substitutions: See General Conditions 7.06, Substitutes.

2.03 VAPOR RETARDER MATERIALS (AIR BARRIER AND WATER-RESISTIVE)

A. Interior Vapor Retarder Sheet: Nylon-based sheet.

1. Water Vapor Permeance: 0.3 perm (17 ng/(Pa s sq m)), maximum, when tested in accordance with ASTM E96 Desiccant Method and 10 perm minimum, when tested in accordance with ASTM E96 Water Method.

2. Seam and Perimeter Tape: Manufacturer's recommended self adhering tape, compatible with sheet material.

3. Manufacturers:

a. Certainteed; MemBrain, www.certainteed.com.

b. Or Equal..

c. Substitutions: See General Conditions 7.06, Substitutes.

2.04 ACCESSORIES

A. Sealants, Tapes, and Accessories for Sealing Weather Barrier and Sealing Weather Barrier to Adjacent Substrates: As specified or as recommended by weather barrier manufacturer.

B. Flexible Flashing: Self-adhesive sheet flashing complying with ASTM D1970/D1970M, except slip resistance requirement is waived if not installed on a roof.

1. Composition: Butyl rubber sheet laminated to elasticized polyethylene sheet.

2. Manufacturers:

a. DuPont de Nemours, Inc; StraightFlash: www.dupont.com/#sle .

b. DuPont de Nemours, Inc; StraightFlash VF: www.dupont.com/#sle .

c. GCP Applied Technologies, Inc. Grace Ultra.

d. Or equal.

e. Substitutions: See General Conditions 7.06, Substitutes.

PART 3 - EXECUTION

3.01 EXAMINATION

A. Verify that surfaces and conditions are ready to accept the work of this section.

3.02 PREPARATION

A. Remove projections, protruding fasteners, and loose or foreign matter that might interfere with proper installation.

B. Clean and prime substrate surfaces to receive adhesives in accordance with manufacturer's instructions.

3.03 INSTALLATION

A. Install materials in accordance with manufacturer's instructions.

B. Air Barriers: Install continuous air tight barrier over surfaces indicated, with sealed seams and with sealed joints to adjacent surfaces.

C. Vapor Retarders: Install continuous air tight barrier over surfaces indicated, with sealed seams and with sealed joints to adjacent surfaces.

D. Mechanically Fastened Sheets - On Exterior:

1. Install sheets shingle-fashion to shed water, with seams generally horizontal.

2. Overlap seams as recommended by manufacturer but at least 6 inches.

3. Overlap at outside and inside corners as recommended by manufacturer but at least 12 inches (305 mm).

4. For applications specified to be air tight, seal seams, laps, penetrations, tears, and cuts with self-adhesive tape; use only large-headed, gasketed fasteners recommended by the manufacturer.

5. Install air barrier and vapor retarder underneath the jamb flashings.

6. Install head flashings under weather barrier.

7. At openings to be filled with frames having nailing flanges, wrap excess sheet into opening; at head, seal sheet over flange and flashing.

E. Mechanically Fastened Sheets - Vapor Retarder On Interior:

1. When insulation is to be installed in assembly, install vapor retarder over insulation.

2. Anchor to wood framing using large-headed nails or staples at 12 to 18 inches (305 to 460 mm) on center along each framing member covered; cover fasteners with seam tape.

3. Seal seams, laps, perimeter edges, penetrations, tears, and cuts with self-adhesive tape, making air tight seal.

4. Locate laps at a framing member; at laps fasten one sheet to framing member then tape overlapping sheet to first sheet.

5. Seal entire perimeter to structure, window and door frames, and other penetrations.

6. Where conduit, pipes, wires, ducts, outlet boxes, and other items are installed in insulation cavity, pass vapor retarder sheet behind item but over insulation and maintain air tight seal.

F. Self-Adhered Sheets:

1. Prepare substrate in manner recommended by sheet manufacturer; fill and tape joints in substrate and between dissimilar materials.

2. Lap sheets shingle-fashion to shed water and seal laps air tight.

3. Once sheets are in place, press firmly into substrate with resilient hand roller; ensure that laps are firmly adhered with no gaps or fishmouths.

4. Use same material, or other material approved by sheet manufacturer for the purpose, to seal to adjacent construction and as flashing.

5. At wide joints, provide extra flexible membrane allowing joint movement.

G. Coatings:

1. Prepare substrate in manner recommended by coating manufacturer; treat joints in substrate and between dissimilar materials as recommended by manufacturer.

2. Where exterior masonry veneer is to be installed, install masonry anchors before installing weather barrier over masonry; seal around anchors air tight.

3. Use flashing to seal to adjacent construction and to bridge joints.

H. Openings and Penetrations in Exterior Weather Barriers:

1. Install flashing over sills, covering entire sill frame member, extending at least 5 inches (125 mm) onto weather barrier and at least 6 inches (150 mm) up jambs; mechanically fasten stretched edges.

2. At openings to be filled with frames having nailing flanges, seal head and jamb flanges using a continuous bead of sealant compressed by flange and cover flanges with sealing tape at least 4 inches (100 mm) wide; do not seal sill flange.

3. At openings to be filled with non-flanged frames, seal weather barrier to each side of opening framing, using flashing at least 9 inches (230 mm) wide, covering entire depth of framing.

4. At head of openings, install flashing under weather barrier extending at least 2 inches (50 mm) beyond face of jambs; seal weather barrier to flashing.

5. At interior face of openings, seal gap between window/door frame and rough framing, using joint sealant over backer rod.

6. Service and Other Penetrations: Form flashing around penetrating item and seal to weather barrier surface.

3.04 FIELD QUALITY CONTROL

A. See Section 01 45 23 – Testing and Inspections, for additional requirements.

B. Coordination of ABAA Tests and Inspections:

1. Provide testing and inspection required by ABAA QAP.

2. Notify ABAA in writing of schedule for air barrier work, and allow adequate time for testing and inspection.

3. Cooperate with ABAA testing agency.

4. Allow access to air barrier work areas and staging.

5. Do not cover air barrier work until tested, inspected, and accepted.

C. Do not cover installed weather barriers until required inspections have been completed.

D. Take digital photographs of each portion of the installation prior to covering up.

3.05 PROTECTION

A. Do not leave materials exposed to weather longer than recommended by manufacturer.

END OF SECTION

SECTION 07 30 12

ROOFING UNDERLAYMENT, EXTENDED HIGH-TEMPERATURE

PART 1 - GENERAL

1.01 SUMMARY

A. This Section specifies a self-adhering sheet membrane used as underlayment for sloped roofs.

1. High temperature application, 300F resistance, extended period, Ultratm, or equal.

B. Related Sections: Refer to the following specification sections for coordination:

1. Section 06 10 00 – Rough Carpentry.
2. Section 07 41 13 – Metal Roof Panels.
3. Section 07 62 00 – Sheet Metal Flashing and Trim
4. Section 07 92 00 – Joint Sealants

C. Referenced Standards: Comply with the requirements of the following standards published by ASTM International to the extent referenced in this section.

1. ASTM D412 - Standard Test Methods for Vulcanized Rubber and Thermoplastic Elastomers - Tension.
2. ASTM D461 - Standard Test Methods for Felt.
3. ASTM D 903 - Standard Test Method for Peel or Stripping Strength of Adhesive Bonds.
4. ASTM D1970 - Standard Specification for Self-Adhering Polymer Modified Bituminous Sheet Materials Used as Steep Roofing Underlayment for Ice Dam Protection.
5. ASTM D3767 - Standard Practice for Rubber—Measurement of Dimensions.
6. ASTM E96 - Standard Test Methods for Water Vapor Transmission of Materials.
7. ASTM G90 – EMMAqua test.

1.02 SUBMITTALS

A. Product Data: Submit manufacturer's product data and installation instructions.

1.03 QUALITY ASSURANCE

A. Regulatory Requirements: Comply with requirements of authorities having jurisdiction and applicable codes at the location of the project.

B. Manufacturer: Minimum 10 years experience producing roofing underlayment.

C. Installer: Minimum 2 years experience with installation of similar underlayment.

1.04 DELIVERY, STORAGE AND HANDLING

A. Deliver materials and products in unopened factory labeled packages. Protect from damage.

B. Cover materials and store in dry condition between temperatures of 40 and 90 degrees F (5 and 32 degrees C). Use within one year of date of manufacture. Do not store at elevated temperatures as that will reduce the shelf life of the product.

PART 2 - PRODUCTS

2.01 MANUFACTURER

A. Manufacturer: GCP Applied Technologies, Inc, 62 Whittemore Avenue, Cambridge, MA 02140, Toll Free 866-333-3726, www.gcpat.com.

B. Or Equal

2.02 MATERIALS

A. Basis of Design: Self-Adhering Sheet Membrane Roof Underlayment: Provide Ultra by GCP Applied Technologies, Inc with the following characteristics:

1. Cold applied, self-adhering membrane composed of a high strength polyethylene film coated on one side with a layer of butyl rubber adhesive and interwound with a disposable release sheet. An embossed, slip resistant surface is provided on the polyethylene.

2. Color: Gray-black.

3. Membrane Thickness 30 mil (0.76 mm) ASTM D3767 method A.

4. Tensile strength, Membrane: 250 psi (1720 kN/m2) ASTM D412 (Die C modified).

5. Elongation, Membrane: 250% ASTM D412 (Die C modified).

6. Low Temperature Flexibility: Unaffected @ -20°F (-29°C) ASTM D1970.

7. Adhesion to Plywood: 3.0 lbs/in width (525 N/m) ASTM D903.

8. Permeance (max): 0.05 Perms (2.9 ng/m2s Pa) ASTM E96.

9. Material Weight Installed (max): 0.22 lb/ft2 (1.1 kg/m2) ASTM D461.

10. Service Temperature: 300 degrees F (148.8 degrees C) per ASTM D1204

11. Primer: Water-based Perm-A-Barrier WB Primer by GCP Applied Technologies, Inc.

12. Code and Standards Compliance: Ultra meets the following requirements:

a. ICC ESR-1677 approval according to AC-48 Acceptance Criteria for Self-Adhered underlayments used as Ice Barriers

b. Underwriters Laboratories, Inc. R13399 Class A fire classification under fiberglass shingles and Class C under organic felt shingles.

c. Underwriters Laboratories, Inc. Classified Sheathing Material Fire Resistance Classification Design Numbers P225, P227, P230, P237, P259, P508, P510, P512, P514, P701, P711, P717, P722, P723, P732, P734, P742, P824.

B. Or Equal

C. Substitutions :See General Conditions 7.06, Substitutes.

PART 3 - EXAMINATION

3.01 INSTALLATION

A. Prior to start of installation, inspect existing conditions to ensure surfaces are suitable for installation of roofing underlayment. Verify flashing has been installed. Starting work indicates installers acceptance of existing conditions.

B. Install roofing underlayment on sloped surfaces at locations indicated on the Drawings, but not less than at hips, ridges, eaves, valleys, sidewalls and chimneys, and surfaces over interior space within 36 inches (914 mm) from the inside face of the exterior wall. Strictly comply with manufacturer's installation instructions including but not limited to the following:

1. Schedule installation such that underlayment is covered by roofing within the published exposure limit of the underlayment.

2. Do not install underlayment on wet or frozen substrates.

3. Install when surface temperature of substrate is a minimum of 40 degrees F (5 degrees C) and rising.

4. Remove dust, dirt, loose materials and protrusions from deck surface.

5. Install membrane on clean, dry, continuous structural deck. Fill voids and damaged or unsupported areas prior to installation.

6. Prime concrete and masonry surfaces using specified primer at a rate of 500-600 square feet per gallon (12-15 sqm/L). Priming is not required for other suitable clean and dry surfaces.

7. Install membrane such that all laps shed water. Work from the low point to the high point of the roof at all times. Apply the membrane in valleys before the membrane is applied to the eaves. Following placement along the eaves, continue application of the membrane up the roof. Membrane may be installed either vertically or horizontally after the first horizontal course.

8. Side laps minimum 3-1/2 inches (89 mm) and end laps minimum 6 inches (152 mm) following lap lines marked on underlayment.

9. Patch penetrations and damage using manufacturer's recommended methods.

3.02 CLEANING AND PROTECTION

A. Protect from damage during construction operations and installation of roofing materials. Promptly repair any damaged or deteriorated surfaces.

B. Repair minor damage to eliminate all evidence of repair. Remove and replace work which cannot be satisfactorily repaired in the opinion of the Architect.

C. Provide temporary protection to ensure work being without damage or deterioration at time of final acceptance. Remove protective film and reclean as necessary immediately before final acceptance.

END OF SECTION

SECTION 07 41 13

METAL ROOF PANELS

PART 1 - GENERAL

1.01 SECTION INCLUDES

A. Requirement for Metal Roof Panels

1.02 RELATED REQUIREMENTS

A. Section 06 10 00 - Rough Carpentry: Roof sheathing.

B. Section 07 21 00 - Thermal Insulation: Rigid roof insulation.

C. Section 07 42 13 - Metal Wall Panels: Preformed wall panels.

D. Section 07 92 00 - Joint Sealants: Sealing joints between metal roof panel system and adjacent construction.

1.03 REFERENCE STANDARDS

A. AAMA 2605 - Voluntary Specification, Performance Requirements and Test Procedures for Superior Performing Organic Coatings on Aluminum Extrusions and Panels (with Coil Coating Appendix) 2020.

B. ASTM A653/A653M - Standard Specification for Steel Sheet, Zinc-Coated (Galvanized) or Zinc-Iron Alloy-Coated (Galvannealed) by the Hot-Dip Process 2020.

C. ASTM C1363 - Standard Test Method for Thermal Performance of Building Materials and Envelope Assemblies by Means of a Hot Box Apparatus 2019.

D. ASTM D1970/D1970M - Standard Specification for Self-Adhering Polymer Modified Bituminous Sheet Materials Used as Steep Roofing Underlayment for Ice Dam Protection 2021.

E. ASTM E1592 - Standard Test Method for Structural Performance of Sheet Metal Roof and Siding Systems by Uniform Static Air Pressure Difference 2005 (Reapproved 2017).

F. ASTM E1646 - Standard Test Method for Water Penetration of Exterior Metal Roof Panel Systems by Uniform Static Air Pressure Difference 1995 (Reapproved 2018).

G. ASTM E1680 - Standard Test Method for Rate of Air Leakage through Exterior Metal Roof Panel Systems 2016 (Reapproved 2022).

H. IAS AC472 - Accreditation Criteria for Inspection Programs for Manufacturers of Metal Building Systems 2018.

I. UL 580 - Standard for Tests for Uplift Resistance of Roof Assemblies Current Edition, Including All Revisions.

1.04 SUBMITTALS

A. See Section 01 33 00 - Submittals, for submittal procedures.

B. Shop Drawings: Include layouts of roof panels, details of edge and penetration conditions, spacing and type of connections, flashings, underlayments, and special conditions.

1. Show work to be field-fabricated or field-assembled.

2. Include structural analysis signed and sealed by qualified structural engineer, indicating compliance of roofing system to specified loading conditions.

C. Verification Samples: For each roofing system specified, submit samples of minimum size 12 inches (305 mm) square, representing actual roofing metal, thickness, profile, color, and texture.

1. Include typical panel joint in sample.

D. Warranty: Submit specified manufacturer's warranty and ensure that forms have been completed in Owner's name and are registered with manufacturer.

1.05 QUALITY ASSURANCE

A. Manufacturer Qualifications: Company specializing in manufacturing products specified in this section, with not less than five years of documented experience.

1. Accredited by IAS in accordance with IAS AC472.

B. Installer Qualifications: Company specializing in performing work of the type specified and with at least five years of documented experience.

1.06 DELIVERY, STORAGE, AND HANDLING

A. Provide strippable plastic protection on prefinished roofing panels for removal after installation.

B. Store roofing panels on project site as recommended by manufacturer to minimize damage to panels prior to installation.

1.07 WARRANTY

A. See Section 01 78 36 – Warranties and Bonds, for additional warranty requirements.

B. Finish Warranty: Provide manufacturer's special warranty covering failure of factory-applied exterior finish on metal roof panels and agreeing to repair or replace panels that show evidence of finish degradation, including significant fading, chalking, cracking, or peeling within specified warranty period of five years from Date of Substantial Completion.

PART 2 - PRODUCTS

2.01 MANUFACTURERS

A. Basis of Design: MP-1:

1. Metal Roof Panels: Versa Span manufactured by Taylor Metal Products.

2.02 METAL ROOF PANELS

A. Metal Roof Panels: Provide complete engineered system complying with specified requirements and capable of remaining weathertight while withstanding anticipated movement of substrate and thermally induced movement of roofing system.

B. Metal Panels: Factory-formed panels with factory-applied finish.

1. Profile: Standing seam, with 1.75" inch (45 mm) seam height; concealed fastener system lapped seam in standing seam profile.

2. Texture: Smooth, with intermediate ribs for added stiffness.

3. Length: Full length of roof slope, without lapped horizontal joints.

4. Width: Maximum panel coverage of 18 inches (457 mm).

C. Metal Soffit Panels:

1. Basis of Design: Soffit: Lifetime Soffit manufactured by Taylor Metal Products.

2. Profile: Solid Panel with no venting.

3. Material: Precoated steel sheet, 22 gage, 0.0299 inch (0.76 mm) minimum thickness.

4. Color: As selected by Architect from manufacturer's standard line.

2.03 ATTACHMENT SYSTEM

A. Concealed System: Provide manufacturer's standard concealed anchor clips designed for specific roofing system and engineered to meet performance requirements, including anticipated thermal movement.

2.04 FINISHES

A. Fluoropolymer Coil Coating System: Manufacturer's standard multi-coat aluminum coil coating system complying with AAMA 2605, including at least 70 percent polyvinylidene fluoride (PVDF) resin, and at least 80 percent of coil coated aluminum surfaces having minimum total dry film thickness (DFT) of 0.9 mil, 0.0009 inch (0.023 mm); color and gloss to match sample.

B. Finish Side: Fluoropolymer Coil Coating System: Polyvinylidene fluoride (PVDF) multi-coat superior performing organic coatings system complying with AAMA 2605, including at least 70 percent PVDF resin, and at least 80 percent of coil coated aluminum surfaces having minimum total dry film thickness (DFT) of 0.9 mil, 0.0009 inch (0.023 mm); color and gloss as selected by Architect from manufacturer’s standard line.

C. Back Side: Siliconized Polyester Coating: Epoxy primer and silicone-modified polyester (SMP) enamel topcoat with minimum dry film thickness (DFT) of 0.8 mil (0.02 mm); color and gloss as selected from manufacturer’s standards.

2.05 ACCESSORIES

A. Miscellaneous Sheet Metal Items: Provide flashings, gutters, downspouts, trim, moldings, closure strips, preformed crickets, caps, and equipment curbs of the same material, thickness, and finish as used for the roofing panels. Items completely concealed after installation may optionally be made of stainless steel.

1. Downspouts: Open face, rectangular profile. Color to match adjacent metal wall panel.

2. Gutters: SMACNA (ASMM) Rectangular Profile - Color to match Roof Metal Panel.

3. Gutters and Downspouts: Size for rainfall intensity determined by a storm occurance of 1 in 10 years in accordance with SMACNA (ASMM).

4. Accessories: Profiled to suit Gutters and Downspouts.

5. Downspout Boots: Steel.

6. Seal Metal Joints.

B. Rib and Ridge Closures: Provide prefabricated, close-fitting components of steel with corrosion resistant finish or combination steel and closed-cell foam.

C. Sealants:

1. Exposed Sealant: Elastomeric; silicone, polyurethane, or silyl-terminated polyether/polyurethane.

2. Concealed Sealant: Non-curing butyl sealant or tape sealant.

D. Underlayment: Synthetic non-asphaltic sheet, intended by manufacturer for mechanically fastened roofing underlayment without sealed seams.

1. Self Sealability: Passing nail sealability test specified in ASTM D1970/D1970M.

2. Low Temperature Flexibility: Passing test specified in ASTM D1970/D1970M.

3. Fasteners: As specified by manufacturer and building code qualification report or approval.

PART 3 - EXECUTION

3.01 EXAMINATION

A. Do not begin installation of preformed metal roof panels until substrates have been properly prepared.

B. If substrate preparation is the responsibility of another installer, notify Architect of unsatisfactory preparation before proceeding.

3.02 PREPARATION

A. Broom clean wood sheathing prior to installation of roofing system.

B. Coordinate roofing work with provisions for roof drainage, flashing, trim, penetrations, and other adjoining work to assure that the completed roof will be free of leaks.

C. Remove protective film from surface of roof panels immediately prior to installation. Strip film carefully, to avoid damage to prefinished surfaces.

D. Separate dissimilar metals by applying a bituminous coating, self-adhering rubberized asphalt sheet, or other permanent method approved by roof panel manufacturer.

E. Where metal will be in contact with wood or other absorbent material subject to wetting, seal joints with sealing compound and apply one coat of heavy-bodied bituminous paint.

3.03 INSTALLATION

A. Overall: Install roofing system in accordance with approved shop drawings and panel manufacturer's instructions and recommendations, as applicable to specific project

conditions. Anchor all components of roofing system securely in place while allowing for thermal and structural movement.

1. Install roofing system with concealed clips and fasteners, except as otherwise recommended by manufacturer for specific circumstances.

2. Minimize field cutting of panels. Where field cutting is absolutely required, use methods that will not distort panel profiles. Use of torches for field cutting is absolutely prohibited.

B. Accessories: Install all components required for a complete roofing assembly, including flashings, gutters, downspouts, trim, moldings, closure strips, preformed crickets, caps, equipment curbs, rib closures, ridge closures, and similar roof accessory items.

C. Roof Panels: Install panels in strict accordance with manufacturer's instructions, minimizing transverse joints except at junction with penetrations.

1. Form weathertight standing seams incorporating concealed clips, using an automatic mechanical seaming device approved by the panel manufacturer.

3.04 CLEANING

A. Clean exposed sheet metal work at completion of installation. Remove grease and oil films, excess joint sealer, handling marks, and debris from installation, leaving the work clean and unmarked, free from dents, creases, waves, scratch marks, or other damage to the finish.

3.05 PROTECTION

A. Do not permit storage of materials or roof traffic on installed roof panels. Provide temporary walkways or planks as necessary to avoid damage to completed work. Protect roofing until completion of project.

B. Touch-up, repair, or replace damaged roof panels or accessories before Date of Substantial Completion.

END OF SECTION

(THIS PAGE LEFT BLANK INTENTIONALLY)

SECTION 07 42 13

METAL WALL PANELS

PART 1 - GENERAL

1.01 SECTION INCLUDES

A. Manufactured metal panels for exterior wall panels, with related flashings and accessory components.

1.02 RELATED REQUIREMENTS

A. Section 06 10 00 - Rough Carpentry: Wall panel substrate.

B. Section 07 21 00 - Thermal Insulation.

C. Section 07 25 00 - Weather Barriers: Weather barrier under wall panels.

D. Section 07 92 00 - Joint Sealants: Sealing joints between metal wall panel system and adjacent construction.

1.03 REFERENCE STANDARDS

A. AAMA 609 & 610 - Cleaning and Maintenance Guide for Architecturally Finished Aluminum (Combined Document) 2015.

B. ASTM A653/A653M - Standard Specification for Steel Sheet, Zinc-Coated (Galvanized) or Zinc-Iron Alloy-Coated (Galvannealed) by the Hot-Dip Process 2020.

1.04 SUBMITTALS

A. Shop Drawings: Indicate dimensions, layout, joints, construction details, support clips, and methods of anchorage.

B. Samples: Submit two samples of each type of wall panel and soffit panel, 12 inches by 12 inches (305 mm by 305 mm) in size illustrating finish color, sheen, and texture.

C. Manufacturer's Qualification Statement.

D. Installer's Qualification Statement.

1.05 QUALITY ASSURANCE

A. Manufacturer Qualifications: Company specializing in manufacturing the products specified in this section with minimum five years of documented experience.

B. Installer Qualifications: Company specializing in installing products of the type specified in this section with minimum five years of documented experience.

1.06 DELIVERY, STORAGE, AND HANDLING

A. Protect panels from accelerated weathering by removing or venting sheet plastic shipping wrap.

B. Store prefinished material off the ground and protected from weather; prevent twisting, bending, or abrasion; provide ventilation; slope metal sheets to ensure proper drainage.

C. Prevent contact with materials that may cause discoloration or staining of products.

1.07 WARRANTY

A. See Section 01 78 36 – Warranties and Bonds, for additional warranty requirements.

PART 2 - PRODUCTS

2.01 MANUFACTURERS

A. Basis of Design:

1. Type: MP-2:

a. Metal Wall Panels - Exposed Fasteners: Classic 7/8" Corrugated Panel manufactured by Taylor Metal Products.

b. Or equal

c. Substitutions: See General Conditions 7.06, Substitutes

2. Type: MP-3:

a. Metal Wall Panels - Exposed Fasteners: BR-36 Panel manufactured by Taylor Metal Products.

b. Or equal

c. Substitutions: See General Conditions 7.06, Substitutes

2.02 MANUFACTURED METAL PANELS

A. Wall Panel System: Factory fabricated prefinished metal panel system, site assembled.

1. Provide exterior wall panels.

2. Design and size components to support assembly dead loads, and to withstand live loads caused by positive and negative wind pressure acting normal to plane of wall.

3. Maximum Allowable Deflection of Panel: L/180 for length(L) of span.

4. Movement: Accommodate movement within system without damage to components or deterioration of seals, movement between system and perimeter components when subject to seasonal temperature cycling; dynamic loading and release of loads; and deflection of structural support framing.

5. Drainage: Provide positive drainage to exterior for moisture entering or condensation occurring within panel system.

6. Fabrication: Formed true to shape, accurate in size, square, and free from distortion or defects; pieces of longest practical lengths.

7. Corners: Factory-fabricated in one continuous piece with minimum 2 inch (51 mm) returns.

8. Provide continuity of air barrier and vapor retarder seal at building enclosure elements in accordance with materials specified in Section 07 25 00.

B. Exterior Wall Panels:

1. Basis of Design Type: MP-2:

a. Classic 7/8' corrugated.

b. Or Equal.

c. Substitutions: See General Conditions 7.06, Substitutes

d. Profile: Vertical style as indicated

e. Side Seams: sealed per manufacturer's written instructions.

f. Color: As selected by Architect from manufacturer's standard line.

2. Basis of Design Type: MP-3:

a. BR-3 manufactured by Taylor Metal Products

b. Or Equal.

c. Substitutions: See General Conditions 7.06, Substitutes

d. Profile: Vertical; style as indicated.

e. Side Seams: sealed per manufacturer's written instructions.

f. Material: Precoated steel sheet, 22 gage, 0.0299 inch (0.76 mm) minimum thickness.

g. Panel Width: 32 inches (813 mm).

h. Color: As selected by Architect from manufacturer's standard line.

C. Internal and External Corners: Same material, thickness, and finish as exterior sheets; profile to suit system; shop cut and factory mitered to required angles.

D. Expansion Joints: Same material, thickness and finish as exterior sheets; manufacturer's standard brake formed type, of profile to suit system.

E. Trim: Same material, thickness and finish as exterior sheets; brake formed to required profiles.

F. Anchors: Per manufacturer's written instructions..

2.03 MATERIALS

A. Precoated Steel Sheet: Hot-dipped galvanized steel sheet, ASTM A653/A653M, with G90/Z275 coating; continuous coil-coated on exposed surfaces with specified finish coating and on panel back with specified panel back coating.

2.04 FINISHES

A. Exposed Surface Finish: Panel manufacturer's standard polyvinylidene fluoride (PVDF) coating, top coat over epoxy primer.

B. Panel Backside Finish: Panel manufacturer's standard siliconized polyester wash coat.

2.05 ACCESSORIES

A. Cladding Support Clips: Manufacture’s standard panel support clip.

1. Galvanized Steel Sheet: ASTM A653/A653M, with G90/Z275 galvanized coating.

B. Gaskets: Manufacturer's standard type suitable for use with system, permanently resilient; ultraviolet and ozone resistant.

C. Concealed Sealants: Non-curing butyl sealant or tape sealant.

D. Exposed Sealant: Elastomeric; silicone, polyurethane, or silyl-terminated polyether/polyurethane.

E. Fasteners: Manufacturer's standard type to suit application.

F. Field Touch-up Paint: As recommended by panel manufacturer.

PART 3 - EXECUTION

3.01 EXAMINATION

A. Verify that building framing members are ready to receive panels.

B. Verify that weather barrier has been installed over substrate completely and correctly.

3.02 PREPARATION

A. Install subgirts perpendicular to panel length, securely fastened to substrates and shimmed and leveled to uniform plane. Space at intervals indicated.

3.03 INSTALLATION

A. Install panels on walls in accordance with manufacturer's instructions.

B. Use concealed fasteners unless otherwise approved by Architect.

3.04 TOLERANCES

A. Maximum Offset From True Alignment Between Adjacent Members Butting or In Line: 1/16 inch (1.6 mm).

B. Maximum Variation from Plane or Location Indicated on Drawings: 1/4 inch (6.4 mm).

3.05 CLEANING

A. Remove site cuttings from finish surfaces.

B. Remove protective material from wall panel surfaces.

C. Clean and wash prefinished surfaces with mild soap and water; rinse with clean water.

D. Upon completion of installation, thoroughly clean prefinished aluminum surfaces in accordance with AAMA 609 & 610.

END OF SECTION

SECTION 07 62 00

SHEET METAL FLASHING AND TRIM

PART 1 - GENERAL

1.01 SECTION INCLUDES

A. Fabricated sheet metal items, including flashings, counterflashings, gutters, and downspouts.

B. Sealants for joints within sheet metal fabrications.

1.02 RELATED REQUIREMENTS

A. Section 06 10 00 - Rough Carpentry: Wood nailers for sheet metal work.

B. Section 07 41 13 - Metal Roof Panels - Downspouts and Gutters

C. Section 07 42 13 - Metal Wall Panels

D. Section 07 92 00 - Joint Sealants: Sealing non-lap joints between sheet metal fabrications and adjacent construction.

1.03 REFERENCE STANDARDS

A. AAMA 2603 - Voluntary Specification, Performance Requirements and Test Procedures for Pigmented Organic Coatings on Aluminum Extrusions and Panels (with Coil Coating Appendix) 2021.

B. AAMA 2604 - Voluntary Specification, Performance Requirements and Test Procedures for High Performance Organic Coatings on Aluminum Extrusions and Panels (with Coil Coating Appendix) 2021, with Errata (2022).

C. AAMA 2605 - Voluntary Specification, Performance Requirements and Test Procedures for Superior Performing Organic Coatings on Aluminum Extrusions and Panels (with Coil Coating Appendix) 2020.

D. ASTM A653/A653M - Standard Specification for Steel Sheet, Zinc-Coated (Galvanized) or Zinc-Iron Alloy-Coated (Galvannealed) by the Hot-Dip Process 2020.

E. ASTM A666 - Standard Specification for Annealed or Cold-Worked Austenitic Stainless Steel Sheet, Strip, Plate, and Flat Bar 2015.

F. ASTM B209 - Standard Specification for Aluminum and Aluminum-Alloy Sheet and Plate 2014.

G. ASTM B209M - Standard Specification for Aluminum and Aluminum-Alloy Sheet and Plate (Metric) 2014.

H. ASTM C920 - Standard Specification for Elastomeric Joint Sealants 2018.

I. ASTM D4586/D4586M - Standard Specification for Asphalt Roof Cement, Asbestos-Free 2007 (Reapproved 2018).

J. CDA A4050 - Copper in Architecture - Handbook current edition.

K. SMACNA (ASMM) - Architectural Sheet Metal Manual 2012.

1.04 QUALITY ASSURANCE

A. Perform work in accordance with SMACNA (ASMM) and CDA A4050 requirements and standard details, except as otherwise indicated.

1.05 DELIVERY, STORAGE, AND HANDLING

A. Stack material to prevent twisting, bending, and abrasion, and to provide ventilation. Slope metal sheets to ensure drainage.

B. Prevent contact with materials that could cause discoloration or staining.

PART 2 - PRODUCTS

2.01 SHEET MATERIALS

A. Pre-Finished Galvanized Steel: ASTM A653/A653M, with G90/Z275 zinc coating; minimum 24 gage, (0.0239) inch (0.61 mm) thick base metal, shop pre-coated with PVDF coating.

1. PVDF (Polyvinylidene Fluoride) Coating: Superior Performance Organic Finish, AAMA 2605; multiple coat, thermally cured fluoropolymer finish system.

2. Color: As selected by Architect from manufacturer's standard colors.

B. Aluminum: ASTM B209 (ASTM B209M); 20 gage, (0.032 inch) (0.81 mm) thick; anodized finish of color as selected.

C. Pre-Finished Aluminum: ASTM B209 (ASTM B209M); 20 gage, (0.032 inch) (0.81 mm) thick; plain finish shop pre-coated with modified silicone coating.

1. Modified Silicone Polyester Coating: Pigmented Organic Coating System, AAMA 2603; baked enamel finish system.

2. Fluoropolymer Coating: High Performance Organic Finish, AAMA 2604; multiple coat, thermally cured fluoropolymer finish system.

D. Stainless Steel: ASTM A666, Type 304 alloy, soft temper, 28 gage, (0.0156 inch) (0.40 mm) thick; smooth No. 4 - Brushed finish.

E. Copper: ASTM B370, cold rolled 16 oz/sq ft (24 gage) (0.0216 inch) (0.55 mm) thick; natural finish.

2.02 FABRICATION

A. Form sections true to shape, accurate in size, square, and free from distortion or defects.

B. Form pieces in longest possible lengths.

C. Hem exposed edges on underside 1/2 inch (13 mm); miter and seam corners.

D. Form material with flat lock seams, except where otherwise indicated; at moving joints, use sealed lapped, bayonet-type or interlocking hooked seams.

E. Fabricate corners from one piece with minimum 18 inch (450 mm) long legs; seam for rigidity, seal with sealant.

F. Fabricate flashings to allow toe to extend 2 inches (50 mm) over roofing gravel. Return and brake edges.

2.03 GUTTER AND DOWNSPOUT FABRICATION

A. See Specification Section 07 41 13 Metal Roof Panels

B. Downspout Boots: Steel.

C. Seal metal joints.

2.04 EXTERIOR PENETRATION FLASHING PANELS

A. Flashing Panels for Exterior Wall Penetrations: Premanufactured components and accessories as required to preserve integrity of building envelope; suitable for conduits and facade materials to be installed.

2.05 ACCESSORIES

A. Fasteners: Galvanized steel, with soft neoprene washers.

B. Primer: Zinc chromate type.

C. Concealed Sealants: Non-curing butyl sealant.

D. Exposed Sealants: ASTM C920; elastomeric sealant, with minimum movement capability as recommended by manufacturer for substrates to be sealed; color to match adjacent material.

E. Plastic Cement: ASTM D4586/D4586M, Type I.

PART 3 - EXECUTION

3.01 EXAMINATION

A. Verify roof openings, curbs, pipes, sleeves, ducts, and vents through roof are solidly set, reglets in place, and nailing strips located.

B. Verify roofing termination and base flashings are in place, sealed, and secure.

3.02 INSTALLATION

A. Comply with drawing details and SMACNA standard installation practices.

B. Secure flashings in place using concealed fasteners, and use exposed fasteners only where permitted..

C. Apply plastic cement compound between metal flashings and felt flashings.

D. Fit flashings tight in place; make corners square, surfaces true and straight in planes, and lines accurate to profiles.

E. Secure gutters and downspouts in place with concealed fasteners.

F. Connect downspouts to downspout boots, and grout connection watertight.

3.03 FIELD QUALITY CONTROL

A. See Section 01 45 23 – Testing and Inspections, for field inspection requirements.

B. Inspection will involve surveillance of work during installation to ascertain compliance with specified requirements.

END OF SECTION

(THIS PAGE LEFT BLANK INTENTIONALLY)

SECTION 07 92 00

JOINT SEALANTS

PART 1 - GENERAL

1.01 SECTION INCLUDES

A. Nonsag gunnable joint sealants.

B. Self-leveling pourable joint sealants.

C. Joint backings and accessories.

D. Owner-provided field quality control.

1.02 RELATED REQUIREMENTS

A. Section 07 25 00 - Weather Barriers: Sealants required in conjunction with air barriers and vapor retarders.

B. Section 08 71 00 - Door Hardware: Setting exterior door thresholds in sealant.

1.03 REFERENCE STANDARDS

A. ASTM C661 - Standard Test Method for Indentation Hardness of Elastomeric-Type Sealants by Means of a Durometer 2015 (Reapproved 2022).

B. ASTM C794 - Standard Test Method for Adhesion-In-Peel of Elastomeric Joint Sealants 2018.

C. ASTM C834 - Standard Specification for Latex Sealants 2017.

D. ASTM C919 - Standard Practice for Use of Sealants in Acoustical Applications 2022.

E. ASTM C920 - Standard Specification for Elastomeric Joint Sealants 2018.

F. ASTM C1087 - Standard Test Method for Determining Compatibility of Liquid-Applied Sealants with Accessories Used in Structural Glazing Systems 2016.

G. ASTM C1193 - Standard Guide for Use of Joint Sealants 2016.

H. ASTM C1248 - Standard Test Method for Staining of Porous Substrate by Joint Sealants 2018.

I. ASTM C1311 - Standard Specification for Solvent Release Sealants 2014.

J. ASTM C1330 - Standard Specification for Cylindrical Sealant Backing for Use with Cold Liquid-Applied Sealants 2018.

K. ASTM C1521 - Standard Practice for Evaluating Adhesion of Installed Weatherproofing Sealant Joints 2019 (Reapproved 2020).

L. ASTM D2240 - Standard Test Method for Rubber Property--Durometer Hardness 2015 (Reapproved 2021).

M. ASTM E119 - Standard Test Methods for Fire Tests of Building Construction and Materials 2020.

N. SCAQMD 1168 - Adhesive and Sealant Applications 1989, with Amendment (2017).

O. UL 263 - Standard for Fire Tests of Building Construction and Materials Current Edition, Including All Revisions.

1.04 SUBMITTALS

A. See Section 01 33 00 - Submittals, for submittal procedures.

B. Product Data for Sealants: Submit manufacturer's technical data sheets for each product to be used, that includes the following.

1. Physical characteristics, including movement capability, VOC content, hardness, cure time, and color availability.

2. List of backing materials approved for use with the specific product.

3. Substrates that product is known to satisfactorily adhere to and with which it is compatible.

4. Substrates the product should not be used on.

C. Color Cards for Selection: Where sealant color is not specified, submit manufacturer's color cards showing standard colors available for selection.

D. Preconstruction Laboratory Test Reports: Submit at least four weeks prior to start of installation.

E. Installation Plan: Submit at least four weeks prior to start of installation.

F. Field Quality Control Plan: Submit at least two weeks prior to start of installation.

G. Installation Log: Submit filled out log for each length or instance of sealant installed.

H. Field Quality Control Log: Submit filled out log for each length or instance of sealant installed, within 10 days after completion of inspections/tests; include bagged test samples and photographic records, if any.

1.05 QUALITY ASSURANCE

A. Manufacturer Qualifications: Company specializing in manufacturing the products specified in this section with minimum five years documented experience.

B. Installer Qualifications: Company specializing in performing the work of this section and with at least five years of documented experience.

C. Preconstruction Laboratory Testing: Arrange for sealant manufacturer(s) to test each combination of sealant, substrate, backing, and accessories.

1. Adhesion Testing: In accordance with ASTM C794.

2. Compatibility Testing: In accordance with ASTM C1087.

3. Allow sufficient time for testing to avoid delaying the work.

4. Deliver to manufacturer sufficient samples for testing.

5. Report manufacturer's recommended corrective measures, if any, including primers or techniques not indicated in product data submittals.

6. Testing is not required if sealant manufacturer provides data showing previous testing, not older than 24 months, that shows satisfactory adhesion, lack of staining, and compatibility.

D. Installation Plan: Include schedule of sealed joints, including the following.

1. Joint width indicated in Contract Documents.

2. Installation Log Form: Include the following data fields, with known information filled out.

a. Date of installation.

b. Name of installer.

c. Actual joint width; provide space to indicate maximum and minimum width.

d. Actual joint depth to face of backing material at centerline of joint.

e. Air temperature.

E. Owner will employ an independent testing agency to perform the field quality control inspection and testing as referenced in PART 3 of this section and as follows, to prepare and submit the field quality control plan and log, and to provide recommendations of remedies in the case of failure.

1. Contractor shall cooperate with testing agency and repair failures discovered and destructive test location damage.

F. Field Quality Control Plan:

1. Visual inspection of entire length of sealant joints.

2. Non-destructive field adhesion testing of sealant joints, except interior acrylic latex sealants.

3. Field Quality Control Log Form: Show same data fields as on Preinstallation Field Adhesion Test Log, with known information filled out and lines for multiple tests per sealant/substrate combinations; include visual inspection and specified field testing; allow for possibility that more tests than minimum specified may be necessary.

G. Field Adhesion Test Procedures:

1. Allow sealants to fully cure as recommended by manufacturer before testing.

2. Have a copy of the test method document available during tests.

3. Record the type of failure that occurred, other information required by test method, and the information required on the Field Quality Control Log.

4. If any combination of sealant type and substrate does not show evidence of minimum adhesion or shows cohesion failure before minimum adhesion, report results to Architect.

H. Non-Destructive Field Adhesion Test: Test for adhesion in accordance with ASTM C1521, using Nondestructive Spot Method.

1.06 WARRANTY

A. See Section 01 78 36 – Warranties and Bonds, for additional warranty requirements.

B. Correct defective work within a five year period after Date of Substantial Completion.

C. Warranty: Include coverage for installed sealants and accessories that fail to achieve watertight seal , exhibit loss of adhesion or cohesion, or do not cure.

PART 2 - PRODUCTS

2.01 MANUFACTURERS

A. Non-Sag Sealants: Permits application in joints on vertical surfaces without sagging or slumping.

1. Available products: Subject to compliance with requirements, suitable for it's function, and compatible with the adjacent material.

2.02 JOINT SEALANT APPLICATIONS

A. Scope:

1. Exterior Joints: Seal open joints, whether or not the joint is indicated on drawings, unless specifically indicated not to be sealed. Exterior joints to be sealed include, but are not limited to, the following items.

a. Wall expansion and control joints.

b. Joints between door, window, and other frames and adjacent construction.

c. Joints between different exposed materials.

d. Openings below ledge angles in masonry.

e. Other joints indicated below.

2. Interior Joints: Do not seal interior joints unless specifically indicated to be sealed. Interior joints to be sealed include, but are not limited to, the following items.

a. Joints between door, window, and other frames and adjacent construction.

b. In sound-rated wall and ceiling assemblies, gaps at electrical outlets, wiring devices, piping, and other openings; between wall/ceiling and other construction; and other flanking sound paths.

c. Other joints indicated below.

3. Do not seal the following types of joints.

a. Intentional weepholes in masonry.

b. Joints indicated to be treated with manufactured expansion joint cover or some other type of sealing device.

c. Joints where sealant is specified to be provided by manufacturer of product to be sealed.

d. Joints where installation of sealant is specified in another section.

e. Joints between suspended panel ceilings/grid and walls.

B. Exterior Joints: Use non-sag non-staining silicone sealant, unless otherwise indicated.

1. Lap Joints in Sheet Metal Fabrications: Butyl rubber, non-curing.

2. Control and Expansion Joints in Concrete Paving: Self-leveling polyurethane "traffic-grade" sealant.

C. Interior Joints: Use non-sag polyurethane sealant, unless otherwise indicated.

1. Wall and Ceiling Joints in Non-Wet Areas: Acrylic emulsion latex sealant.

2. Wall and Ceiling Joints in Wet Areas: Non-sag polyurethane sealant for continuous liquid immersion.

3. Floor Joints in Wet Areas: Non-sag polyurethane "non-traffic-grade" sealant suitable for continuous liquid immersion.

4. Joints between Fixtures in Wet Areas and Floors, Walls, and Ceilings: Mildew-resistant silicone sealant; white.

5. In Sound-Rated Assemblies: Acrylic emulsion latex sealant.

6. Narrow Control Joints in Interior Concrete Slabs: Self-leveling epoxy sealant.

7. Other Floor Joints: Self-leveling polyurethane "traffic-grade" sealant.

D. Interior Wet Areas: Bathrooms, restrooms, and kitchens; fixtures in wet areas include plumbing fixtures, food service equipment, countertops, cabinets, and other similar items.

E. Sound-Rated Assemblies: Walls and ceilings identified as "STC-rated", "sound-rated", or "acoustical".

2.03 JOINT SEALANTS - GENERAL

A. Sealants and Primers: Provide products having lower volatile organic compound (VOC) content than indicated in SCAQMD 1168.

B. Colors: As listed below, to match adjacent surfaces, as approved by Engineer, and/or as indicated on drawings.

2.04 NONSAG JOINT SEALANTS

A. Non-Staining Silicone Sealant: ASTM C920, Grade NS, Uses M and A; not expected to withstand continuous water immersion or traffic.

1. Movement Capability: Plus 100 percent and minus 50 percent, minimum.

2. Non-Staining To Porous Stone: Non-staining to light-colored natural stone when tested in accordance with ASTM C1248.

3. Dirt Pick-Up: Reduced dirt pick-up compared to other silicone sealants.

B. Silicone Sealant: ASTM C920, Grade NS, Uses M and A; not expected to withstand continuous water immersion or traffic.

1. Movement Capability: Plus and minus 25 percent, minimum.

C. Mildew-Resistant Silicone Sealant: ASTM C920, Grade NS, Uses M and A; single component, mildew resistant; not expected to withstand continuous water immersion or traffic.

1. Color: White.

D. Hybrid Urethane Sealant: ASTM C920, Grade NS, Uses M and A; single component; not expected to withstand continuous water immersion or traffic.

1. Movement Capability: Plus and minus 35 percent, minimum.

E. Polyurethane Sealant: ASTM C920, Grade NS, Uses M and A; single or multi-component; not expected to withstand continuous water immersion or traffic.

1. Movement Capability: Plus 100 percent, minus 50 percent, minimum.

F. Polyurethane Sealant for Continuous Water Immersion: ASTM C920, Grade NS, Uses M and A; single or multi-component; explicitly approved by manufacturer for continuous water immersion; suitable for traffic exposure when recessed below traffic surface.

1. Movement Capability: Plus and minus 35 percent, minimum.

G. Acrylic Emulsion Latex: Water-based; ASTM C834, single component, non-staining, non-bleeding, non-sagging; not intended for exterior use.

H. Acrylic Latex Sealant: ASTM C834; for use as acoustical sealant and in firestopping systems for expansion joints and through penetrations.

1. Fire Rated System: Complies with UL 263 and ASTM E119 with UL fire resistance classifications.

I. Non-Curing Butyl Sealant: Solvent-based, single component, non-sag, non-skinning, non-hardening, non-bleeding; non-vapor-permeable; intended for fully concealed applications.

2.05 SELF-LEVELING SEALANTS

A. Self-Leveling Polyurethane Sealant: ASTM C920, Grade P, Uses M and A; single or multi-component; explicitly approved by manufacturer for traffic exposure; not expected to withstand continuous water immersion .

1. Movement Capability: Plus and minus 25 percent, minimum.

B. Self-Leveling Polyurethane Sealant for Continuous Water Immersion: Polyurethane; ASTM C920, Grade P, Uses M and A; single or multi-component; explicitly approved by manufacturer for traffic exposure and continuous water immersion.

1. Movement Capability: Plus and minus 25 percent, minimum.

C. Rigid Self-Leveling Polyurethane Joint Filler: Two part, low viscosity, fast setting; intended for cracks and control joints not subject to significant movement.

1. Hardness Range: Greater than 100, Shore A, and 50 to 80, Shore D, when tested in accordance with ASTM C661.

D. Flexible Polyurethane Foam: Single-component, gun grade, and low-expanding.

E. Semi-Rigid Self-Leveling Epoxy Joint Filler: Epoxy or epoxy/polyurethane copolymer; intended for filling cracks and control joints not subject to significant movement; rigid enough to support concrete edges under traffic.

1. Composition: Multi-component, 100 percent solids by weight.

2. Durometer Hardness: Minimum of 85 for Type A or 35 for Type D, after seven days when tested in accordance with ASTM D2240.

3. Joint Width, Minimum: 1/8 inch (3 mm).

2.06 ACCESSORIES

A. Backer Rod: Cylindrical cellular foam rod with surface that sealant will not adhere to, compatible with specific sealant used, and recommended by backing and sealant manufacturers for specific application.

1. Type for Joints Not Subject to Pedestrian or Vehicular Traffic: ASTM C1330; Type O - Open Cell Polyurethane.

2. Type for Joints Subject to Pedestrian or Vehicular Traffic: ASTM C1330; Type B - Bi-Cellular Polyethylene.

3. Open Cell: 40 to 50 percent larger in diameter than joint width.

4. Closed Cell and Bi-Cellular: 25 to 33 percent larger in diameter than joint width.

B. Backing Tape: Self-adhesive polyethylene tape with surface that sealant will not adhere to and recommended by tape and sealant manufacturers for specific application.

C. Masking Tape: Self-adhesive, nonabsorbent, non-staining, removable without adhesive residue, and compatible with surfaces adjacent to joints and sealants.

D. Joint Cleaner: Non-corrosive and non-staining type, type recommended by sealant manufacturer; compatible with joint forming materials.

E. Primers: Type recommended by sealant manufacturer to suit application; non-staining.

PART 3 - EXECUTION

3.01 EXAMINATION

A. Verify that joints are ready to receive work.

B. Verify that backing materials are compatible with sealants.

C. Verify that backer rods are of the correct size.

3.02 PREPARATION

A. Remove loose materials and foreign matter that could impair adhesion of sealant.

B. Clean joints, and prime as necessary, in accordance with manufacturer's instructions.

C. Perform preparation in accordance with manufacturer's instructions and ASTM C1193.

D. Mask elements and surfaces adjacent to joints from damage and disfigurement due to sealant work; be aware that sealant drips and smears may not be completely removable.

E. Concrete Floor Joints That Will Be Exposed in Completed Work: Test joint filler in inconspicuous area to verify that it does not stain or discolor slab.

3.03 INSTALLATION

A. Perform work in accordance with sealant manufacturer's requirements for preparation of surfaces and material installation instructions.

B. Perform installation in accordance with ASTM C1193.

C. Perform acoustical sealant application work in accordance with ASTM C919.

D. Install bond breaker backing tape where backer rod cannot be used.

E. Install sealant free of air pockets, foreign embedded matter, ridges, and sags, and without getting sealant on adjacent surfaces.

F. Do not install sealant when ambient temperature is outside manufacturer's recommended temperature range, or will be outside that range during the entire curing period, unless manufacturer's approval is obtained and instructions are followed.

G. Nonsag Sealants: Tool surface concave, unless otherwise indicated; remove masking tape immediately after tooling sealant surface.

H. Concrete Floor Joint Filler: After full cure, shave joint filler flush with top of concrete slab.

3.04 FIELD QUALITY CONTROL

A. Perform field quality control inspection/testing as specified in PART 1 under QUALITY ASSURANCE article.

B. Non-Destructive Adhesion Testing: If there are any failures in first 100 linear feet (30 linear m), notify Architect immediately.

C. Remove and replace failed portions of sealants using same materials and procedures as indicated for original installation.

END OF SECTION

SECTION 08 11 13

HOLLOW METAL DOORS AND FRAMES

PART 1 - GENERAL

1.01 SUMMARY

A. Section Includes:

1. Standard and custom hollow metal doors and frames.
2. Steel sidelight, borrowed lite and transom frames.
3. Louvers installed in hollow metal doors.
4. Light frames and glazing installed in hollow metal doors.

B. Related Sections:

1. Division 00 Section "General Conditions".
2. Division 04 Section "Unit Masonry" for embedding anchors for hollow metal work into masonry construction.
3. Division 08 Section "Door Hardware".
4. Division 09 Sections "Exterior Painting" and "Interior Painting" for field painting hollow metal doors and frames.

C. Codes and References: Comply with the version year adopted by the Authority Having Jurisdiction.

1. ANSI/SDI A250.8 - Recommended Specifications for Standard Steel Doors and Frames.
2. ANSI/SDI A250.4 - Test Procedure and Acceptance Criteria for Physical Endurance for Steel Doors, Frames, Frames Anchors and Hardware Reinforcing.
3. ANSI/SDI A250.6 - Recommended Practice for Hardware Reinforcing on Standard Steel Doors and Frames.
4. ANSI/SDI A250.10 - Test Procedure and Acceptance Criteria for Prime Painted Steel Surfaces for Steel Doors and Frames.
5. ANSI/SDI A250.11 - Recommended Erection Instructions for Steel Frames.
6. ASTM A1008 - Standard Specification for Steel Sheet, Cold-Rolled, Carbon, Structural, High-Strength Low-Alloy and High-Strength Low-Alloy with Improved Formability.
7. ASTM A653 - Standard Specification for Steel Sheet, Zinc-Coated (Galvanized) or Zinc-Iron Alloy-Coated (Galvannealed) by the Hot-Dip Process.
8. ASTM A924 - Standard Specification for General Requirements for Steel Sheet, Metallic-Coated by the Hot-Dip Process.
9. ASTM C1363 - Standard Test Method for Thermal Performance of Building Assemblies by Means of a Hot Box Apparatus.

10. ANSI/BHMA A156.115 - Hardware Preparation in Steel Doors and Frames.

11. ANSI/SDI 122 - Installation and Troubleshooting Guide for Standard Steel Doors and Frames.

12. ANSI/NFPA 80 - Standard for Fire Doors and Fire Windows; National Fire Protection Association.

13. ANSI/NFPA 105: Standard for the Installation of Smoke Door Assemblies.

14. NFPA 252 - Standard Methods of Fire Tests of Door Assemblies; National Fire Protection Association.

15. UL 10C - Positive Pressure Fire Tests of Door Assemblies.

16. UL 1784 - Standard for Air Leakage Tests of Door Assemblies.

1.02 RELATED DOCUMENTS

A. Drawings and general provisions of the Contract, including General and Supplementary Conditions and Division 01 Specification Sections, apply to this Section.

1.03 SUBMITTALS

A. Product Data: For each type of product indicated. Include construction details, material descriptions, core descriptions, hardware reinforcements, profiles, anchors, fire-resistance rating, and finishes.

B. Door hardware supplier is to furnish templates, template reference number and/or physical hardware to the steel door and frame supplier in order to prepare the doors and frames to receive the finish hardware items.

C. Shop Drawings: Include the following:

1. Elevations of each door design.

2. Details of doors, including vertical and horizontal edge details and metal thicknesses.

3. Frame details for each frame type, including dimensioned profiles and metal thicknesses.

4. Locations of reinforcement and preparations for hardware.

5. Details of anchorages, joints, field splices, and connections.

6. Details of accessories.

7. Details of moldings, removable stops, and glazing.

8. Details of conduit and preparations for power, signal, and control systems.

D. Samples for Verification:

1. Samples are only required by request of the architect and for manufacturers that are not current members of the Steel Door Institute.

1.04 QUALITY ASSURANCE

A. Source Limitations: Obtain hollow metal doors and frames through one source from a single manufacturer wherever possible.

B. Quality Standard: In addition to requirements specified, furnish SDI-Certified manufacturer products that comply with ANSI/SDI A250.8, latest edition, "Recommended Specifications for Standard Steel Doors and Frames".

C. Fire-Rated Door Assemblies: Assemblies complying with NFPA 80 that are listed and labeled by a qualified testing agency, for fire-protection ratings indicated, based on testing at positive pressure according to UL10C (neutral pressure at 40” above sill) or UL 10C.

1. Oversize Fire-Rated Door Assemblies Construction: For units exceeding sizes of tested assemblies, attach construction label certifying doors are built to standard construction requirements for tested and labeled fire rated door assemblies except for size.

2. Temperature-Rise Limit: Where indicated and at vertical exit enclosures (stairwell openings) and exit passageways, provide doors that have a maximum transmitted temperature end point of not more than 450 deg F (250 deg C) above ambient after 30 minutes of standard fire-test exposure.

3. Smoke Control Door Assemblies: Comply with NFPA 105.

a. Smoke "S" Label: Doors to bear “S” label, and include smoke and draft control gasketing applied to frame and on meeting stiles of pair doors.

D. Fire-Rated, Borrowed-Light Frame Assemblies: Assemblies complying with NFPA 80 that are listed and labeled, by a testing and inspecting agency acceptable to authorities having jurisdiction, for fire-protection ratings indicated, based on testing according to NFPA 257. Provide labeled glazing material.

E. Pre-Submittal Conference: Conduct conference in compliance with requirements in Division 01 Section "Project Meetings" with attendance by representatives of Supplier, Installer, and Contractor to review proper methods and procedures for installing hollow metal doors and frames and to verify installation of electrical knockout boxes and conduit at frames with electrified or access control hardware.

1.05 DELIVERY, STORAGE, AND HANDLING

A. Deliver hollow metal work palletized, wrapped, or crated to provide protection during transit and Project site storage. Do not use non-vented plastic.

B. Deliver welded frames with two removable spreader bars across bottom of frames, tack welded to jambs and mullions.

C. Store hollow metal work under cover at Project site. Place in stacks of five units maximum in a vertical position with heads up, spaced by blocking, on minimum 4-inch high wood blocking. Do not store in a manner that traps excess humidity.

1. Provide minimum 1/4-inch space between each stacked door to permit air circulation. Door and frames to be stacked in a vertical upright position.

1.06 PROJECT CONDITIONS

A. Field Measurements: Verify actual dimensions of openings by field measurements before fabrication.

1.07 COORDINATION

A. Coordinate installation of anchorages for hollow metal frames. Furnish setting drawings, templates, and directions for installing anchorages, including sleeves, concrete inserts, anchor bolts, and items with integral anchors. Deliver such items to Project site in time for installation.

B. Building Information Modeling (BIM) Support: Utilize designated BIM software tools and obtain training needed to successfully participate in the Project BIM processes. All technical disciplines are responsible for the product data integration and data reliability of their Work into the coordinated BIM applications.

1.08 WARRANTY

A. Special Warranty: Manufacturer's standard form in which manufacturer agrees to repair or replace doors that fail in materials or workmanship within specified warranty period.

B. Warranty includes installation and finishing that may be required due to repair or replacement of defective doors.

PART 2 - PRODUCTS

2.01 MANUFACTURERS

A. Manufacturers: Subject to compliance with requirements, provide steel doors and frames from a SDI Certified manufacturer:

1. CECO Door Products (C).
2. Curries Company (CU).
3. Pioneer Industries (PI).
4. Security Metal Products (SMP).
5. Or Equal.
6. Substitutions: See General Conditions 7.06, Substitutes

2.02 MATERIALS

A. Cold-Rolled Steel Sheet: ASTM A1008/A1008M, Commercial Steel (CS), Type B; suitable for exposed applications.

B. Metallic-Coated Steel Sheet: ASTM A653/A653M, Commercial Steel (CS), Type B; with minimum G60 (Z180) or A60 (ZF180) metallic coating.

C. Recycled Content of Steel Products: Postconsumer recycled content plus one-half of preconsumer recycled content not less than 38 percent.

D. Frame Anchors: ASTM A653/A653M, Commercial Steel (CS), Commercial Steel (CS), Type B; with minimum G60 (Z180) or A60 (ZF180) metallic coating.

2.03 HOLLOW METAL DOORS

A. General: Provide 1-3/4 inch doors of design indicated, not less than thickness indicated; fabricated with smooth surfaces, without visible joints or seams on exposed faces unless otherwise indicated. Comply with ANSI/SDI A250.8 and ANSI/NAAMM HMMA 867.

B. Exterior Doors (Energy Efficient): Face sheets fabricated of commercial quality hot-dipped zinc coated steel that complies with ASTM A924 A60. Provide doors complying with requirements indicated below by referencing ANSI/SDI A250.8 for level and model, ANSI/SDI A250.4 for physical performance level, and HMMA 867 for door construction.

1. Design: Flush panel.

2. Core Construction: Foamed in place polyurethane and steel stiffened laminated core with no stiffener face welds, in compliance with HMMA 867 “Laminated Core”.

a. Provide 22 gauge steel stiffeners at 6 inches on-center internally welded at 5" on- center to integral core assembly, foamed in place polyurethane core chemically bonded to all interior surfaces. No stiffener face welding is permitted.

b. Thermal properties to rate at a fully operable minimum U-Factor 0.37 and R-Value 2.7, including insulated door, thermal-break frame and threshold.

c. Kerf Type Frames: Thermal properties to rate at a fully operable minimum U-Factor 0.38 and R-Value 2.6, including insulated door, kerf type frame, and threshold.

3. Level/Model: Level 3 and Physical Performance Level A (Extra Heavy Duty), Minimum 16 gauge (0.053 inch - 1.3-mm) thick steel, Model 2.

4. Vertical Edges: Vertical edges to be mechanically interlocked with hairline seam. Beveled Lock Edge, 1/8 inch in 2 inches (3 mm in 50 mm).

5. Top and Bottom Edges: Reinforce tops and bottoms of doors with a continuous steel channel not less than 16 gauge, extending the full width of the door and welded to the face sheet. Doors with an inverted top channel to include a steel closure channel, screw attached, with the web of the channel flush with the face sheets of the door. Plastic or composite channel fillers are not acceptable.

6. Hinge Reinforcement: Minimum 7 gauge (3/16") plate 1-1/4" x 9".

7. Hardware Reinforcements: Fabricate according to ANSI/SDI A250.6 with reinforcing plates from same material as door face sheets.

C. Manufacturers Basis of Design:

1. Curries Company (CU) - Energy Efficient - 777 Trio-E Series.

2. Or Equal.

3. Substitutions: See General Conditions 7.06, Substitutes.

2.04 HOLLOW METAL FRAMES

A. General: Comply with ANSI/SDI A250.8 and with details indicated for type and profile.

B. Thermal Break Frames: Subject to the same compliance standards and requirements as standard hollow metal frames. Tested for thermal performance in accordance with NFRC 102, and resistance to air infiltration in accordance with NFRC 400. Where indicated provide thermally broken frame profiles available for use in both masonry and drywall

construction. Fabricate with 1/16” positive thermal break and integral vinyl weatherstripping.

C. Exterior Frames: Fabricated of hot-dipped zinc coated steel that complies with A 653/A653M, Coating Designation A60.

1. Fabricate frames with mitered or coped corners. Profile as indicated on drawings.

2. Frames: Minimum 16 gauge (0.053-inch -1.3-mm) thick steel sheet.

3. Manufacturers Basis of Design:

a. Curries Company (CU) – M Series.

b. Curries Company (CU) – Thermal Break TQ Series.

D. Interior Frames: Fabricated from cold-rolled steel sheet that complies with ASTM A1008/A 1008M.

1. Fabricate frames with mitered or coped corners. Profile as indicated on drawings.

2. Manufacturers Basis of Design:

a. CECO Door Products (C) - SU Series.

b. Curries Company (CU) - M Series.

E. Fire rated frames: Fabricate frames in accordance with NFPA 80, listed and labeled by a qualified testing agency, for fire-protection ratings indicated.

F. Hardware Reinforcement: Fabricate according to ANSI/SDI A250.6 Table 4 with reinforcement plates from same material as frames.

2.05 FRAME ANCHORS

A. Jamb Anchors:

1. Masonry Type: Adjustable strap-and-stirrup or T-shaped anchors to suit frame size, formed from A60 metallic coated material, not less than 0.042 inch thick, with corrugated or perforated straps not less than 2 inches wide by 10 inches long; or wire anchors not less than 0.177 inch thick.

2. Stud Wall Type: Designed to engage stud and not less than 0.042 inch thick.

3. Compression Type for Drywall Slip-on (Knock-Down) Frames: Adjustable compression anchors.

B. Floor Anchors: Floor anchors to be provided at each jamb, formed from A60 metallic coated material, not less than 0.042 inches thick.

C. Mortar Guards: Formed from same material as frames, not less than 0.016 inches thick.

2.06 LOUVERS

A. Metal Louvers: Unless otherwise indicated provide louvers to meet the following requirements.

1. Blade Type: Vision proof inverted V or inverted Y.

2. Metal and Finish: Galvanized steel, 0.040 inch thick, factory primed for paint finish with baked enamel or powder coated finish. Match pre-finished door paint color where applicable.

B. Louvers for Fire Rated Doors: Metal louvers with fusible link and closing device, listed and labeled for use in doors with fire protection rating of 1-1/2 hours and less.

1. Manufacturers: Subject to compliance with requirements, provide louvers to meet rating indicated.

2. Metal and Finish: Galvanized steel, 0.040 inch thick, factory primed for paint finish with baked enamel or powder coated finish. Match pre-finished door paint color where applicable.

2.07 LIGHT OPENINGS AND GLAZING

A. Stops and Moldings: Provide stops and moldings around glazed lites where indicated. Form corners of stops and moldings with butted or mitered hairline joints at fabricator's shop. Fixed and removable stops to allow multiple glazed lites each to be removed independently. Coordinate frame rabbet widths between fixed and removable stops with the type of glazing and installation indicated.

B. Moldings for Glazed Lites in Doors and Loose Stops for Glazed Lites in Frames: Minimum 20 gauge thick, fabricated from same material as door face sheet in which they are installed.

C. Fixed Frame Moldings: Formed integral with hollow metal frames, a minimum of 5/8 inch (16 mm) high unless otherwise indicated. Provide fixed frame moldings and stops on outside of exterior and on secure side of interior doors and frames.

D. Preformed Metal Frames for Light Openings: Manufacturer's standard frame formed of 0.048-inch-thick, cold rolled steel sheet; with baked enamel or powder coated finish; and approved for use in doors of fire protection rating indicated. Match pre-finished door paint color where applicable.

2.08 ACCESSORIES

A. Mullions and Transom Bars: Join to adjacent members by welding or rigid mechanical anchors.

B. Grout Guards: Formed from same material as frames, not less than 0.016 inches thick.

2.09 FABRICATION

A. Fabricate hollow metal work to be rigid and free of defects, warp, or buckle. Accurately form metal to required sizes and profiles, with minimum radius for thickness of metal. Where practical, fit and assemble units in manufacturer's plant. When shipping limitations so dictate, frames for large openings are to be fabricated in sections for splicing or splining in the field by others.

B. Tolerances: Fabricate hollow metal work to tolerances indicated in ANSI/SDI A250.8.

C. Hollow Metal Doors:

1. Exterior Doors: Provide optional weep-hole openings in bottom of exterior doors to permit moisture to escape where specified.

2. Glazed Lites: Factory cut openings in doors with applied trim or kits to fit. Factory install glazing where indicated.

3. Astragals: Provide overlapping astragals as noted in door hardware sets in Division 08 Section "Door Hardware" on one leaf of pairs of doors where required by NFPA 80 for fire-performance rating or where indicated. Extend minimum 3/4 inch beyond edge of door on which astragal is mounted.

4. Continuous Hinge Reinforcement: Provide welded continuous 12 gauge strap for continuous hinges specified in hardware sets in Division 08 Section "Door Hardware".

D. Hollow Metal Frames:

1. Shipping Limitations: Where frames are fabricated in sections due to shipping or handling limitations, provide alignment plates or angles at each joint, fabricated of same thickness metal as frames.

2. Welded Frames: Weld flush face joints continuously; grind, fill, dress, and make smooth, flush, and invisible.

   a. Welded frames are to be provided with two steel spreaders temporarily attached to the bottom of both jambs to serve as a brace during shipping and handling. Spreader bars are for bracing only and are not to be used to size the frame opening.

3. Sidelight and Transom Bar Frames: Provide closed tubular members with no visible face seams or joints, fabricated from same material as door frame. Fasten members at crossings and to jambs by butt welding.

4. High Frequency Hinge Reinforcement: Provide high frequency hinge reinforcements at door openings 48-inches and wider with mortise butt type hinges at top hinge locations.

5. Continuous Hinge Reinforcement: Provide welded continuous 12 gauge straps for continuous hinges specified in hardware sets in Division 08 Section "Door Hardware".

6. Provide countersunk, flat- or oval-head exposed screws and bolts for exposed fasteners unless otherwise indicated for removable stops, provide security screws at exterior locations.

7. Mortar Guards: Provide guard boxes at back of hardware mortises in frames at all hinges and strike preps regardless of grouting requirements.

8. Floor Anchors: Weld anchors to bottom of jambs and mullions with at least four spot welds per anchor.

9. Jamb Anchors: Provide number and spacing of anchors as follows:

   a. Masonry Type: Locate anchors not more than 18 inches from top and bottom of frame. Space anchors not more than 32 inches o.c. and as follows:

      1) Two anchors per jamb up to 60 inches high.

      2) Three anchors per jamb from 60 to 90 inches high.

3) Four anchors per jamb from 90 to 120 inches high.

4) Four anchors per jamb plus 1 additional anchor per jamb for each 24 inches or fraction thereof above 120 inches high.

b. Stud Wall Type: Locate anchors not more than 18 inches from top and bottom of frame. Space anchors not more than 32 inches o.c. and as follows:

1) Three anchors per jamb up to 60 inches high.

2) Four anchors per jamb from 60 to 90 inches high.

3) Five anchors per jamb from 90 to 96 inches high.

4) Five anchors per jamb plus 1 additional anchor per jamb for each 24 inches or fraction thereof above 96 inches high.

5) Two anchors per head for frames above 42 inches wide and mounted in metal stud partitions.

10. Door Silencers: Except on weatherstripped or gasketed doors, drill stops to receive door silencers. Silencers to be supplied by frame manufacturer regardless if specified in Division 08 Section "Door Hardware".

11. Bituminous Coating: Where frames are fully grouted with an approved Portland Cement based grout or mortar, coat inside of frame throat with a water based bituminous or asphaltic emulsion coating to a minimum thickness of 3 mils DFT, tested in accordance with UL 10C and applied to the frame under a 3rd party independent follow-up service procedure.

E. Hardware Preparation: Factory prepare hollow metal work to receive template mortised hardware; include cutouts, reinforcement, mortising, drilling, and tapping according to the Door Hardware Schedule and templates furnished as specified in Division 08 Section "Door Hardware."

1. Locate hardware as indicated, or if not indicated, according to ANSI/SDI A250.8.

2. Reinforce doors and frames to receive non-template, mortised and surface mounted door hardware.

3. Comply with applicable requirements in ANSI/SDI A250.6 and ANSI/DHI A115 Series specifications for preparation of hollow metal work for hardware.

4. Coordinate locations of conduit and wiring boxes for electrical connections with Division 26 Sections.

2.10 STEEL FINISHES

A. Prime Finishes: Doors and frames to be cleaned, and chemically treated to insure maximum finish paint adhesion. Surfaces of the door and frame exposed to view to receive a factory applied coat of rust inhibiting shop primer.

1. Shop Primer: Manufacturer's standard, fast-curing, lead and chromate free primer complying with ANSI/SDI A250.10 acceptance criteria; recommended by primer manufacturer for substrate; and compatible with substrate and field-applied coatings.

PART 3 - EXECUTION

3.01 EXAMINATION

A. Examine substrates, areas, and conditions, with Installer present, for compliance with requirements for installation tolerances and other conditions affecting performance of the Work.

B. General Contractor to verify the accuracy of dimensions given to the steel door and frame manufacturer for existing openings or existing frames (strike height, hinge spacing, hinge back set, etc.).

C. Proceed with installation only after unsatisfactory conditions have been corrected.

3.02 PREPARATION

A. Remove welded in shipping spreaders installed at factory. Restore exposed finish by grinding, filling, and dressing, as required to make repaired area smooth, flush, and invisible on exposed faces.

B. Prior to installation, adjust and securely brace welded hollow metal frames for square, level, twist, and plumb condition.

C. Tolerances shall comply with SDI-117 "Manufacturing Tolerances Standard Steel Doors and Frames."

D. Drill and tap doors and frames to receive non-template, mortised, and surface-mounted door hardware.

3.03 INSTALLATION

A. General: Install hollow metal work plumb, rigid, properly aligned, and securely fastened in place; comply with Drawings and manufacturer's written instructions.

B. Hollow Metal Frames: Install hollow metal frames of size and profile indicated. Comply with ANSI/SDI A250.11 and NFPA 80 at fire rated openings.

1. Set frames accurately in position, plumbed, leveled, aligned, and braced securely until permanent anchors are set. After wall construction is complete and frames properly set and secured, remove temporary braces, leaving surfaces smooth and undamaged. Shim as necessary to comply with installation tolerances.

2. Floor Anchors: Provide floor anchors for each jamb and mullion that extends to floor, and secure with post-installed expansion anchors.

3. Masonry Walls: Coordinate installation of frames to allow for solidly filling space between frames and masonry with mortar.

4. Grout Requirements: Do not grout head of frames unless reinforcing has been installed in head of frame. Do not grout vertical or horizontal closed mullion members.

C. Hollow Metal Doors: Fit hollow metal doors accurately in frames, within clearances specified below. Shim as necessary.

1. Non-Fire-Rated Standard Steel Doors:

a. Jambs and Head: 1/8 inch plus or minus 1/16 inch.

b. Between Edges of Pairs of Doors: 1/8 inch plus or minus 1/16 inch.

c. Between Bottom of Door and Top of Threshold: Maximum 3/8 inch.

d. Between Bottom of Door and Top of Finish Floor (No Threshold): Maximum 3/4 inch.

2. Fire-Rated Doors: Install doors with clearances according to NFPA 80.

D. Field Glazing: Comply with installation requirements in Division 08 Section "Glazing" and with hollow metal manufacturer's written instructions.

3.04 ADJUSTING AND CLEANING

A. Final Adjustments: Check and readjust operating hardware items immediately before final inspection. Leave work in complete and proper operating condition. Remove and replace defective work, including hollow metal work that is warped, bowed, or otherwise unacceptable.

B. Remove grout and other bonding material from hollow metal work immediately after installation.

C. Prime-Coat and Painted Finish Touchup: Immediately after erection, sand smooth rusted or damaged areas of prime coat, or painted finishes, and apply touchup of compatible air drying, rust-inhibitive primer, zinc rich primer (exterior and galvanized openings) or finish paint.

3.05 FIELD QUALITY CONTROL

A. Field Inspection (Punch Report): Reference Division 01 Sections “Closeout Procedures”. Produce project punch report for each installed door opening indicating compliance with approved submittals and verification hardware is properly installed, operating and adjusted. Include list of items to be completed and corrected, indicating the reasons or deficiencies causing the Work to be incomplete or rejected.

1. Organization of List: Include separate Door Opening and Deficiencies and Corrective Action Lists organized by Mark, Opening Remarks and Comments, and related Opening Images and Video Recordings.

END OF SECTION

(THIS PAGE LEFT BLANK INTENTIONALLY)

SECTION 08 33 23

OVERHEAD COILING DOORS

PART 1 - GENERAL

1.01 SECTION INCLUDES

A. Overhead coiling doors, operating hardware, non-fire-rated and exterior; electrically operated.

B. Wiring from electric circuit disconnect to operator to control station.

1.02 RELATED REQUIREMENTS

A. Section 26 05 83 - Wiring Connections: Power to disconnect.

1.03 REFERENCE STANDARDS

A. ASTM A36/A36M - Standard Specification for Carbon Structural Steel 2019.

B. ASTM A653/A653M - Standard Specification for Steel Sheet, Zinc-Coated (Galvanized) or Zinc-Iron Alloy-Coated (Galvannealed) by the Hot-Dip Process 2020.

C. ITS (DIR) - Directory of Listed Products current edition.

D. NEMA 250 - Enclosures for Electrical Equipment (1000 Volts Maximum) 2020.

E. NEMA ICS 2 - Industrial Control and Systems Controllers, Contactors and Overload Relays Rated 600 Volts 2008 (Reaffirmed 2020).

F. NEMA MG 1 - Motors and Generators 2018.

G. UL (DIR) - Online Certifications Directory Current Edition.

H. UL 325 - Standard for Door, Drapery, Gate, Louver, and Window Operators and Systems Current Edition, Including All Revisions.

1.04 SUBMITTALS

A. See Section 01 33 00 - Submittals, for submittal procedures.

B. Product Data: Provide general construction, electrical equipment, and component connections and details.

C. Shop Drawings: Indicate pertinent dimensioning, anchorage methods, hardware locations, and installation details.

D. Samples: Submit two slats, 12 by 12 inches (305 by 305 mm) in size illustrating shape, color and finish texture.

E. Manufacturer's Installation Instructions: Indicate installation sequence and procedures, adjustment and alignment procedures.

F. Warranty Documentation: Submit manufacturer warranty and ensure that forms have been completed in Owner's name and registered with manufacturer.

1.05 QUALITY ASSURANCE

A. Installer Qualifications: Company specializing in performing work of type specified and with at least five years documented experience.

B. Products Requiring Electrical Connection: Listed and classified by ITS (DIR), UL (DIR), or testing firm acceptable to authorities having jurisdiction as suitable for purpose specified.

1.06 WARRANTY

A. See Section 01 78 36 – Warranties and Bonds, for additional warranty requirements.

PART 2 - PRODUCTS

2.01 MANUFACTURERS

A. Overhead Coiling Doors:

1. The Cookson Company: www.cooksondoor.com/#sle.

2. Wayne-Dalton, a Division of Overhead Door Corporation: www.wayne-dalton.com/#sle.

3. Or Equal.

4. Substitutions: See General Conditions 7.06, Substitutes.

2.02 COILING DOORS

A. Exterior Coiling Doors: Steel slat curtain.

1. Capable of withstanding positive and negative wind loads of 20 psf (940 Pa), without undue deflection or damage to components.

2. Sandwich slat construction with insulated core of foamed-in-place polyurethane insulation; minimum R-value of 8.1 (RSI-value of 1.43).

3. Nominal Slat Size: 3 inches (75 mm) wide by required length.

4. Finish: Factory painted, color as selected.

5. Guide, Angles: Finish to match curtain.

6. Hood Enclosure: Manufacturer's standard; primed steel.

7. Electric operation.

8. Mounting: Surface mounted.

9. Locking Devices: Slide bolt on inside.

2.03 MATERIALS AND COMPONENTS

A. Metal Curtain Construction: Hinged slats.

1. Slat Ends: Alternate slats fitted with end locks to act as wearing surface in guides and to prevent lateral movement. Finish to match slats.

2. Insulated Curtain Bottom for Slat Curtains: Fitted with angles to provide reinforcement and positive contact in closed position. Finish to match slats.

3. Weatherstripping for Exterior Doors: Moisture and rot proof, resilient type, located at jamb edges, bottom of curtain, and where curtain enters hood enclosure of exterior doors.

4. Steel Slats: Minimum thickness, 24 gage, .0239 inch (.607 mm); ASTM A653/A653M galvanized steel sheet.

B. Guide Construction: Continuous, of profile to retain door in place, mounting brackets of same metal.

C. Guides - Angle: ASTM A36/A36M metal angles, size as required for wind loading.

D. Hood Enclosure and Trim: Internally reinforced to maintain rigidity and shape.

1. Minimum thickness; 24 gage, 0.020 inch (0.511 mm).

2. Prime paint.

E. Lock Hardware:

1. For motor operated units, additional lock or latching mechanisms are not required.

2. Slide Bolt: Provide on both-jamb sides, extending into slot in guides, with padlock on one side.

2.04 ELECTRIC OPERATION

A. Operator, Controls, Actuators, and Safeties: Comply with UL 325; provide products listed by testing agency acceptable to authorities having jurisdiction.

1. Provide interlock switches on motor operated units.

B. Electric Operators:

1. Mounting: Side mounted.

2. Motor Enclosure:

a. Exterior Coiling Doors: NEMA MG 1, Type 4; open drip proof.

3. Motor Rating: 1/3 HP (250 W); continuous duty.

4. Motor Voltage: 120 volts, single phase, 60 Hz.

5. Motor Controller: NEMA ICS 2, full voltage, reversing magnetic motor starter.

6. Controller Enclosure: NEMA 250, Type 4.

7. Opening Speed: 8-9 inches per second (203-228 mm/sec).

8. Brake: Manufacturer's standard type, activated by motor controller.

9. Manual override in case of power failure.

10. Refer to Section 26 05 83 for electrical connections.

C. Control Station: Provide standard three button (Open-Close-Stop) momentary-contact control device for each operator complying with UL 325.

1. 24 volt circuit.

2. Surface mounted, at interior door jamb.

3. Entrapment Protection Devices: Provide sensing devices and safety mechanisms complying with UL 325.

a. Primary Device: Provide electric sensing edge, wireless sensing, NEMA 1 photo eye sensors, or NEMA 4X photo eye sensors as required with momentary-contact control device.

D. Safety Edge: Located at bottom of coiling door, full width, electro-mechanical sensitized type, wired to stop and reverse door direction upon striking object, hollow neoprene covered.

PART 3 - EXECUTION

3.01 EXAMINATION

A. Verify that opening sizes, tolerances and conditions are acceptable.

3.02 INSTALLATION

A. Install units in accordance with manufacturer's instructions.

B. Use anchorage devices to securely fasten assembly to wall construction and building framing without distortion or stress.

C. Securely and rigidly brace components suspended from structure. Secure guides to structural members only.

D. Fit and align assembly including hardware; level and plumb, to provide smooth operation.

E. Coordinate installation of electrical service with Section 26 05 83.

F. Complete wiring from disconnect to unit components.

G. Install enclosure and perimeter trim.

3.03 TOLERANCES

A. Maintain dimensional tolerances and alignment with adjacent work.

B. Maximum Variation From Plumb: 1/16 inch (1.6 mm).

C. Maximum Variation From Level: 1/16 inch (1.6 mm).

D. Longitudinal or Diagonal Warp: Plus or minus 1/8 inch per 10 feet (3.2 mm per 3 m) straight edge.

3.04 ADJUSTING

A. Adjust operating assemblies for smooth and noiseless operation.

3.05 CLEANING

A. Clean installed components.

B. Remove labels and visible markings.

END OF SECTION

SECTION 08 71 00

DOOR HARDWARE

PART 1 - GENERAL

1.01 SUMMARY

A. This Section includes commercial door hardware for the following:

1. Swinging doors.
2. Sliding doors.
3. Other doors to the extent indicated.

B. Door hardware includes, but is not necessarily limited to, the following:

1. Mechanical door hardware.
2. Electromechanical door hardware.
3. Cylinders specified for doors in other sections.

C. Related Sections:

1. Division 08 Section “Hollow Metal Doors and Frames”.

D. Codes and References: Comply with the version year adopted by the Authority Having Jurisdiction.

1. ANSI A117.1 - Accessible and Usable Buildings and Facilities.
2. ICC/IBC - International Building Code.
3. NFPA 70 - National Electrical Code.
4. NFPA 80 - Fire Doors and Windows.
5. NFPA 101 - Life Safety Code.
6. NFPA 105 - Installation of Smoke Door Assemblies.
7. State Building Codes, Local Amendments.

E. Standards: All hardware specified herein shall comply with the following industry standards as applicable. Any undated reference to a standard shall be interpreted as referring to the latest edition of that standard:

1. ANSI/BHMA Certified Product Standards - A156 Series.
2. UL10C - Positive Pressure Fire Tests of Door Assemblies.
3. ANSI/UL 294 - Access Control System Units.
4. UL 305 - Panic Hardware.
5. ANSI/UL 437- Key Locks.

1.02 RELATED DOCUMENTS

A. Drawings and general provisions of the Contract, including General and Supplementary Conditions and Division 1 Specification Sections, apply to this Section.

1.03 SUBMITTALS

A. Product Data: Manufacturer's product data sheets including installation details, material descriptions, dimensions of individual components and profiles, operational descriptions and finishes.

B. Door Hardware Schedule: Prepared by or under the supervision of supplier, detailing fabrication and assembly of door hardware, as well as procedures and diagrams. Coordinate the final Door Hardware Schedule with doors, frames, and related work to ensure proper size, thickness, hand, function, and finish of door hardware.

1. Format: Comply with scheduling sequence and vertical format in DHI's "Sequence and Format for the Hardware Schedule."

2. Organization: Organize the Door Hardware Schedule into door hardware sets indicating complete designations of every item required for each door or opening. Organize door hardware sets in same order as in the Door Hardware Sets at the end of Part 3. Submittals that do not follow the same format and order as the Door Hardware Sets will be rejected and subject to resubmission.

3. Content: Include the following information:

a. Type, style, function, size, label, hand, and finish of each door hardware item.

b. Manufacturer of each item.

c. Fastenings and other pertinent information.

d. Location of door hardware set, cross-referenced to Drawings, both on floor plans and in door and frame schedule.

e. Explanation of abbreviations, symbols, and codes contained in schedule.

f. Mounting locations for door hardware.

g. Door and frame sizes and materials.

h. Warranty information for each product.

4. Submittal Sequence: Submit the final Door Hardware Schedule at earliest possible date, particularly where approval of the Door Hardware Schedule must precede fabrication of other work that is critical in the Project construction schedule. Include Product Data, Samples, Shop Drawings of other work affected by door hardware, and other information essential to the coordinated review of the Door Hardware Schedule.

C. Shop Drawings: Details of electrified access control hardware indicating the following:

1. Wiring Diagrams: Upon receipt of approved schedules, submit detailed system wiring diagrams for power, signaling, monitoring, communication, and control of the access control system electrified hardware. Differentiate between manufacturer-installed and field-installed wiring. Include the following:

a. Elevation diagram of each unique access controlled opening showing location and interconnection of major system components with respect to their placement in the respective door openings.

b. Complete (risers, point-to-point) access control system block wiring diagrams.

c. Wiring instructions for each electronic component scheduled herein.

2. Electrical Coordination: Coordinate with related sections the voltages and wiring details required at electrically controlled and operated hardware openings.

D. Keying Schedule: After a keying meeting with the owner has taken place prepare a separate keying schedule detailing final instructions. Submit the keying schedule in electronic format. Include keying system explanation, door numbers, key set symbols, hardware set numbers and special instructions. Owner must approve submitted keying schedule prior to the ordering of permanent cylinders/cores.

E. Informational Submittals:

1. Product Test Reports: Indicating compliance with cycle testing requirements, based on evaluation of comprehensive tests performed by manufacturer and witnessed by a qualified independent testing agency.

F. Operating and Maintenance Manuals: Provide manufacturers operating and maintenance manuals for each item comprising the complete door hardware installation in quantity as required in Division 01, Closeout Procedures.

1.04 QUALITY ASSURANCE

A. Manufacturers Qualifications: Engage qualified manufacturers with a minimum 5 years of documented experience in producing hardware and equipment similar to that indicated for this Project and that have a proven record of successful in-service performance.

B. Certified Products: Where specified, products must maintain a current listing in the Builders Hardware Manufacturers Association (BHMA) Certified Products Directory (CPD).

C. Installer Qualifications: A minimum 3 years documented experience installing both standard and electrified door hardware similar in material, design, and extent to that indicated for this Project and whose work has resulted in construction with a record of successful in-service performance.

D. Door Hardware Supplier Qualifications: Experienced commercial door hardware distributors with a minimum 5 years documented experience supplying both mechanical and electromechanical hardware installations comparable in material, design, and extent to that indicated for this Project. Supplier recognized as a factory direct distributor by the manufacturers of the primary materials with a warehousing facility in Project's vicinity. Supplier to have on staff a certified Architectural Hardware Consultant (AHC) available during the course of the Work to consult with Contractor, Architect, and Owner concerning both standard and electromechanical door hardware and keying.

E. Source Limitations: Obtain each type and variety of door hardware specified in this section from a single source unless otherwise indicated.

1. Electrified modifications or enhancements made to a source manufacturer's product line by a secondary or third party source will not be accepted.

2. Provide electromechanical door hardware from the same manufacturer as mechanical door hardware, unless otherwise indicated.

F. Each unit to bear third party permanent label demonstrating compliance with the referenced standards.

G. Keying Conference: Conduct conference to comply with requirements in Division 01 Section "Project Meetings." Keying conference to incorporate the following criteria into the final keying schedule document:

1. Function of building, purpose of each area and degree of security required.

2. Plans for existing and future key system expansion.

3. Requirements for key control storage and software.

4. Installation of permanent keys, cylinder cores and software.

5. Address and requirements for delivery of keys.

H. Pre-Submittal Conference: Conduct coordination conference in compliance with requirements in Division 01 Section "Project Meetings" with attendance by representatives of Supplier(s), Installer(s), and Contractor(s) to review proper methods and the procedures for receiving, handling, and installing door hardware.

1. Prior to installation of door hardware, conduct a project specific training meeting to instruct the installing contractors' personnel on the proper installation and adjustment of their respective products. Product training to be attended by installers of door hardware (including electromechanical hardware) for aluminum, hollow metal and wood doors. Training will include the use of installation manuals, hardware schedules, templates and physical product samples as required.

2. Inspect and discuss electrical roughing-in, power supply connections, and other preparatory work performed by other trades.

3. Review sequence of operation narratives for each unique access controlled opening.

4. Review and finalize construction schedule and verify availability of materials.

5. Review the required inspecting, testing, commissioning, and demonstration procedures

I. At completion of installation, provide written documentation that components were applied to manufacturer's instructions and recommendations and according to approved schedule.

1.05 DELIVERY, STORAGE, AND HANDLING

A. Inventory door hardware on receipt and provide secure lock-up and shelving for door hardware delivered to Project site. Do not store electronic access control hardware, software or accessories at Project site without prior authorization.

B. Tag each item or package separately with identification related to the final Door Hardware Schedule, and include basic installation instructions with each item or package.

C. Deliver, as applicable, permanent keys, cylinders, cores, access control credentials, software and related accessories directly to Owner via registered mail or overnight package service. Instructions for delivery to the Owner shall be established at the "Keying Conference".

1.06 COORDINATION

A. Templates: Obtain and distribute to the parties involved templates for doors, frames, and other work specified to be factory prepared for installing standard and electrified hardware. Check Shop Drawings of other work to confirm that adequate provisions are made for locating and installing hardware to comply with indicated requirements.

B. Door and Frame Preparation: Doors and corresponding frames are to be prepared, reinforced and pre-wired (if applicable) to receive the installation of the specified electrified, monitoring, signaling and access control system hardware without additional in-field modifications.

1.07 WARRANTY

A. General Warranty: Reference Division 01, General Requirements. Special warranties specified in this Article shall not deprive Owner of other rights Owner may have under other provisions of the Contract Documents and shall be in addition to, and run concurrent with, other warranties made by Contractor under requirements of the Contract Documents.

B. Warranty Period: Written warranty, executed by manufacturer(s), agreeing to repair or replace components of standard and electrified door hardware that fails in materials or workmanship within specified warranty period after final acceptance by the Owner. Failures include, but are not limited to, the following:

1. Structural failures including excessive deflection, cracking, or breakage.

2. Faulty operation of the hardware.

3. Deterioration of metals, metal finishes, and other materials beyond normal weathering.

4. Electrical component defects and failures within the systems operation.

C. Standard Warranty Period: One year from date of Substantial Completion, unless otherwise indicated.

D. Special Warranty Periods:

1. Five years for exit hardware.

2. Twenty five years for manual overhead door closer bodies.

3. Five years for motorized electric latch retraction exit devices.

4. Two years for electromechanical door hardware, unless noted otherwise.

1.08 MAINTENANCE SERVICE

A. Maintenance Tools and Instructions: Furnish a complete set of specialized tools and maintenance instructions as needed for Owner's continued adjustment, maintenance, and removal and replacement of door hardware.

PART 2 - PRODUCTS

2.01 SCHEDULED DOOR HARDWARE

A. General: Provide door hardware for each door to comply with requirements in Door Hardware Sets and each referenced section that products are to be supplied under.

B. Designations: Requirements for quantity, item, size, finish or color, grade, function, and other distinctive qualities of each type of door hardware are indicated in the Door Hardware Sets at the end of Part 3. Products are identified by using door hardware designations, as follows:

1. Named Manufacturer's Products: Product designation and manufacturer are listed for each door hardware type required for the purpose of establishing requirements. Manufacturers' names are abbreviated in the Door Hardware Schedule.

C. Substitutions: Requests for substitution and product approval for inclusive mechanical and electromechanical door hardware in compliance with the specifications must be submitted in writing and in accordance with the procedures and time frames outlined in General Conditions 7.06, Substitutes. Approval of requests is at the discretion of the architect, owner, and their designated consultants.

2.02 HANGING DEVICES

A. Hinges: ANSI/BHMA A156.1 certified butt hinges with number of hinge knuckles and other options as specified in the Door Hardware Sets.

1. Quantity: Provide the following hinge quantity:

a. Two Hinges: For doors with heights up to 60 inches.

b. Three Hinges: For doors with heights 61 to 90 inches.

c. Four Hinges: For doors with heights 91 to 120 inches.

d. For doors with heights more than 120 inches, provide 4 hinges, plus 1 hinge for every 30 inches of door height greater than 120 inches.

2. Hinge Size: Provide the following, unless otherwise indicated, with hinge widths sized for door thickness and clearances required:

a. Widths up to 3’0”: 4-1/2” standard or heavy weight as specified.

b. Sizes from 3’1” to 4’0”: 5” standard or heavy weight as specified.

3. Hinge Weight and Base Material: Unless otherwise indicated, provide the following:

a. Exterior Doors: Heavy weight, non-ferrous, ball bearing or oil impregnated bearing hinges unless Hardware Sets indicate standard weight.

b. Interior Doors: Standard weight, steel, ball bearing or oil impregnated bearing hinges unless Hardware Sets indicate heavy weight.

4. Hinge Options: Comply with the following:

a. Non-removable Pins: With the exception of electric through wire hinges, provide set screw in hinge barrel that, when tightened into a groove in

hinge pin, prevents removal of pin while door is closed; for the all out-swinging lockable doors.

5. Manufacturers:

a. Bommer Industries (BO).

b. McKinney (MK).

c. Stanley Hardware (ST).

2.03 POWER TRANSFER DEVICES

A. Electrified Quick Connect Transfer Hinges: Provide electrified transfer hinges with Molex™ standardized plug connectors and sufficient number of concealed wires (up to 12) to accommodate the electrified functions specified in the Door Hardware Sets with a 1-year warranty. Connectors plug directly to through-door wiring harnesses for connection to electric locking devices and power supplies. Wire nut connections are not acceptable.

1. Manufacturers:

a. McKinney (MK) - QC (# wires) Option.

B. Electric Door Wire Harnesses: Provide electric/data transfer wiring harnesses with standardized plug connectors to accommodate up to twelve (12) wires. Connectors plug directly to through-door wiring harnesses for connection to electric locking devices and power supplies. Provide sufficient number and type of concealed wires to accommodate electric function of specified hardware. Provide a connector for through-door electronic locking devices and from hinge to junction box above the opening. Wire nut connections are not acceptable. Determine the length required for each electrified hardware component for the door type, size and construction, minimum of two per electrified opening.

1. Provide one each of the following tools as part of the base bid contract:

a. McKinney (MK) - Electrical Connecting Kit: QC-R001.

b. McKinney (MK) - Connector Hand Tool: QC-R003.

2. Manufacturers:

a. McKinney (MK) - QC-C Series.

2.04 CYLINDERS AND KEYING

A. General: Cylinder manufacturer to have minimum (10) years experience designing secured master key systems and have on record a published security keying system policy.

B. Source Limitations: Obtain each type of keyed cylinder and keys from the same source manufacturer as locksets and exit devices, unless otherwise indicated.

C. Cylinder Types: Original manufacturer cylinders able to supply the following cylinder formats and types:

1. Threaded mortise cylinders with rings and cams to suit hardware application.

2. Rim cylinders with back plate, flat-type vertical or horizontal tailpiece, and raised trim ring.

3. Bored or cylindrical lock cylinders with tailpieces as required to suit locks.

4. Tubular deadlocks and other auxiliary locks.

5. Mortise and rim cylinder collars to be solid and recessed to allow the cylinder face to be flush and be free spinning with matching finishes.

6. Keyway: Manufacturer’s Standard.

D. Removable Cores: Provide removable cores as specified, core insert, removable by use of a special key, and for use with only the core manufacturer's cylinder and door hardware.

E. Security Cylinders: ANSI/BHMA A156.5, Grade 1 Certified Products Directory (CPD) listed security cylinders and keys able to be used together under the same facility master or grandmaster key system. Cylinders to be factory keyed.

1. New security key systems shall not be established with products that have an expired patent. Expired systems shall only be specified and supplied to support existing systems.

2. Manufacturers:

a. Corbin Russwin (RU) - Access 3 AS.

b. Sargent (SA) - Degree DG2.

F. Keying System: Each type of lock and cylinders to be factory keyed.

1. Supplier shall conduct a "Keying Conference" to define and document keying system instructions and requirements.

2. Furnish factory cut, nickel-silver large bow permanently inscribed with a visual key control number as directed by Owner.

3. New System: Key locks to a new key system as directed by the Owner.

G. Key Quantity: Provide the following minimum number of keys:

1. Change Keys per Cylinder: Two (2)

2. Master Keys (per Master Key Level/Group): Five (5).

3. Construction Keys (where required): Ten (10).

H. Construction Keying: Provide construction master keyed cylinders.

I. Key Registration List (Bitting List):

1. Provide keying transcript list to Owner's representative in the proper format for importing into key control software.

2. Provide transcript list in writing or electronic file as directed by the Owner.

2.05 ELECTROMECHANICAL LOCKING DEVICES

A. Electromechanical Mortise Locksets, Grade 1 (Heavy Duty, High Security Monitoring): ANSI/BHMA A156.13, Series 1000, Operational Grade 1 Certified Products Directory (CPD) listed, subject to same compliance standards and requirements as mechanical mortise locksets, electrified locksets to be of type and design as specified below.

1. Electrified Lock Options: Where indicated in the Hardware Sets, provide electrified options including: outside door lock/unlock trim control, latchbolt and lock/unlock status monitoring, deadbolt monitoring, and request-to-exit signaling. Support end-of-line resistors contained within the lock case. Unless otherwise indicated, provide electrified locksets standard as fail secure.

2. Energy Efficient Design: Provide lock bodies which have a holding current draw of 15mA maximum, and can operate on either 12 or 24 volts. Locks are to be field configurable for fail safe or fail secure operation.

3. High Security Monitoring: Provide lock bodies which have built-in request to exit monitoring and are provided with accompanying door position switches. Provide a resistor configuration which is compatible with the access control system.

4. Manufacturers:

a. Corbin Russwin Hardware (RU) - ML20600 NAC Series.

b. Sargent Manufacturing (SA) - NAC 8200 Series.

B. Electromechanical Mortise Locksets, Grade 1 (Commercial Duty): ANSI/BHMA A156.13, Series 1000, Operational Grade 1 Certified Products Directory (CPD) listed, subject to same compliance standards and requirements as mechanical mortise locksets, electrified locksets to be of type and design as specified below.

1. Electrified Lock Options: Where indicated in the Hardware Sets, provide electrified options including: outside door lock/unlock trim control, latchbolt and lock/unlock status monitoring, deadbolt monitoring, and request-to-exit signaling. Support end-of-line resistors contained within the lock case. Unless otherwise indicated, provide electrified locksets standard as fail secure.

2. Manufacturers:

C. Electromechanical Multi-Point Locks: Vertical rod locking devices designed for openings requiring multiple latching points within one locking mechanism. Rods are retracted by dual mounted outside lever trim controls available in a variety of ANSI/BHMA operational functions. Option for single top latching only eliminates the need for bottom strikes. Electromechanical options include solenoid activated trim, electric latch retraction, and inside and outside lever monitoring.

1. Energy Efficient Design: Provide lock bodies which have a holding current draw of 15mA maximum, and can operate on either 12 or 24 volts. Locks are to be field configurable for fail safe or fail secure operation.

2. Manufacturers:

a. Corbin Russwin Hardware (RU) MP9800 Series.

b. Sargent Manufacturing (SA) - 7000 Series.

2.06 LOCK AND LATCH STRIKES

A. Strikes: Provide manufacturer's standard strike with strike box for each latch or lock bolt, with curved lip extended to protect frame, finished to match door hardware set, unless otherwise indicated, and as follows:

1. Flat-Lip Strikes: For locks with three-piece antifriction latchbolts, as recommended by manufacturer.

2. Extra-Long-Lip Strikes: For locks used on frames with applied wood casing trim.

3. Aluminum-Frame Strike Box: Provide manufacturer's special strike box fabricated for aluminum framing.

4. Double-lipped strikes: For locks at double acting doors. Furnish with retractable stop for rescue hardware applications.

B. Standards: Comply with the following:

1. Strikes for Mortise Locks and Latches: BHMA A156.13.

2. Strikes for Bored Locks and Latches: BHMA A156.2.

3. Strikes for Auxiliary Deadlocks: BHMA A156.36.

4. Dustproof Strikes: BHMA A156.16.

2.07 CONVENTIONAL EXIT DEVICES

A. General Requirements: All exit devices specified herein shall meet or exceed the following criteria:

1. At doors not requiring a fire rating, provide devices complying with NFPA 101 and listed and labeled for "Panic Hardware" according to UL305. Provide proper fasteners as required by manufacturer including sex nuts and bolts at openings specified in the Hardware Sets.

2. Where exit devices are required on fire rated doors, provide devices complying with NFPA 80 and with UL labeling indicating "Fire Exit Hardware". Provide devices with the proper fasteners for installation as tested and listed by UL. Consult manufacturer’s catalog and template book for specific requirements.

3. Except on fire rated doors, provide exit devices with hex key dogging device to hold the pushbar and latch in a retracted position. Provide optional keyed cylinder dogging on devices where specified in Hardware Sets.

4. Devices must fit flat against the door face with no gap that permits unauthorized dogging of the push bar. The addition of filler strips is required in any case where the door light extends behind the device as in a full glass configuration.

5. Lever Operating Trim: Where exit devices require lever trim, furnish manufacturer's heavy duty escutcheon trim with threaded studs for thru-bolts.

a. Lock Trim Design: As indicated in Hardware Sets, provide finishes and designs to match that of the specified locksets.

b. Where function of exit device requires a cylinder, provide a cylinder (Rim or Mortise) as specified in Hardware Sets.

6. Vertical Rod Exit Devices: Where surface or concealed vertical rod exit devices are used at interior openings, provide as less bottom rod (LBR) unless otherwise indicated. Provide dust proof strikes where thermal pins are required to project into the floor.

7. Narrow Stile Applications: At doors constructed with narrow stiles, or as specified in Hardware Sets, provide devices designed for maximum 2” wide stiles.

8. Dummy Push Bar: Nonfunctioning push bar matching functional push bar.

9. Rail Sizing: Provide exit device rails factory sized for proper door width application.

10. Through Bolt Installation: For exit devices and trim as indicated in Door Hardware Sets.

B. Conventional Push Rail Exit Devices (Heavy Duty): ANSI/BHMA A156.3, Grade 1 Certified Products Directory (CPD) listed panic and fire exit hardware devices furnished in the functions specified in the Hardware Sets. Exit device latch to be stainless steel, pullman type, with deadlock feature.

1. Manufacturers:

a. Corbin Russwin Hardware (RU) - ED4000 / ED5000 Series.

b. Sargent Manufacturing (SA) - 80 Series.

2.08 ELECTROMECHANICAL EXIT DEVICES

A. Electromechanical Push Rail Exit Devices (Heavy Duty): ANSI/BHMA A156.3, Grade 1 Certified Products Directory (CPD) listed panic and fire exit hardware devices subject to same compliance standards and requirements as mechanical exit devices. Electrified exit devices to be of type and design as specified below and in the hardware sets.

1. Energy Efficient Design: Provide devices which have a holding current draw of 15mA maximum, and can operate on either 12 or 24 volts. Locks are to be field configurable for fail safe or fail secure operation.

2. Where conventional power supplies are not sufficient, include any specific controllers required to provide the proper inrush current.

3. Motorized Electric Latch Retraction: Devices with an electric latch retraction feature must use motors which have a maximum current draw of 600mA. Solenoid driven latch retraction is not acceptable.

4. Manufacturers:

a. Corbin Russwin Hardware (RU) - ED5000 Series.

b. Sargent Manufacturing (SA) - 80 Series.

2.09 DOOR CLOSERS

A. All door closers specified herein shall meet or exceed the following criteria:

1. General: Door closers to be from one manufacturer, matching in design and style, with the same type door preparations and templates regardless of application or spring size. Closers to be non-handed with full sized covers.

2. Standards: Closers to comply with UL-10C for Positive Pressure Fire Test and be U.L. listed for use of fire rated doors.

3. Size of Units: Comply with manufacturer's written recommendations for sizing of door closers depending on size of door, exposure to weather, and anticipated

frequency of use. Where closers are indicated for doors required to be accessible to the Americans with Disabilities Act, provide units complying with ANSI ICC/A117.1.

4. Closer Arms: Provide heavy duty, forged steel closer arms unless otherwise indicated in Hardware Sets.

5. Closers shall not be installed on exterior or corridor side of doors; where possible install closers on door for optimum aesthetics.

6. Closer Accessories: Provide door closer accessories including custom templates, special mounting brackets, spacers and drop plates as required for proper installation. Provide through-bolt and security type fasteners as specified in the hardware sets.

B. Door Closers, Surface Mounted (Heavy Duty): ANSI/BHMA A156.4, Grade 1 Certified Products Directory (CPD) listed surface mounted, heavy duty door closers with complete spring power adjustment, sizes 1 thru 6; and fully operational adjustable according to door size, frequency of use, and opening force. Closers to be rack and pinion type, one piece cast iron or aluminum alloy body construction, with adjustable backcheck and separate non-critical valves for closing sweep and latch speed control. Provide non-handed units standard.

1. Manufacturers:

a. Corbin Russwin Hardware (RU) - DC6000 Series.

b. Norton Rixson (NO) - 7500 Series.

c. Sargent Manufacturing (SA) - 351 Series.

d. Yale Commercial(YA) - 4400 Series.

e. Or Equal.

f. Substitutions: See General Conditions 7.06, Substitutes.

2.10 ARCHITECTURAL TRIM

A. Door Protective Trim

General: Door protective trim units to be of type and design as specified below or in the Hardware Sets.

1. Size: Fabricate protection plates (kick, armor, or mop) not more than 2" less than door width (LDW) on stop side of single doors and 1” LDW on stop side of pairs of doors, and not more than 1" less than door width on pull side. Coordinate and provide proper width and height as required where conflicting hardware dictates. Height to be as specified in the Hardware Sets.

2. Where plates are applied to fire rated doors with the top of the plate more than 16” above the bottom of the door, provide plates complying with NFPA 80. Consult manufacturer’s catalog and template book for specific requirements for size and applications.

3. Protection Plates: ANSI/BHMA A156.6 certified protection plates (kick, armor, or mop), fabricated from the following:

a. Stainless Steel: 300 grade, 050-inch thick.

4. Options and fasteners: Provide manufacturer's designated fastener type as specified in the Hardware Sets. Provide countersunk screw holes.

5. Manufacturers:

a. Hiawatha, Inc. (HI).

b. Rockwood (RO).

c. Trimco (TC).

d. Or Equal.

e. Substitutions: See General Conditions 7.06, Substitutes.

2.11 DOOR STOPS AND HOLDERS

A. General: Door stops and holders to be of type and design as specified below or in the Hardware Sets.

B. Door Stops and Bumpers: ANSI/BHMA A156.16, Grade 1 certified door stops and wall bumpers. Provide wall bumpers, either convex or concave types with anchorage as indicated, unless floor or other types of door stops are specified in Hardware Sets. Do not mount floor stops where they will impede traffic. Where floor or wall bumpers are not appropriate, provide overhead type stops and holders.

1. Manufacturers:

a. Hiawatha, Inc. (HI).

b. Rockwood (RO).

c. Trimco (TC).

d. Or Equal.

e. Substitutions: See General Conditions 7.06, Substitutes.

2.12 ARCHITECTURAL SEALS

A. General: Thresholds, weatherstripping, and gasket seals to be of type and design as specified below or in the Hardware Sets. Provide continuous weatherstrip gasketing on exterior doors and provide smoke, light, or sound gasketing on interior doors where indicated. At exterior applications provide non-corrosive fasteners and elsewhere where indicated.

B. Smoke Labeled Gasketing: Assemblies complying with NFPA 105 that are listed and labeled by a testing and inspecting agency acceptable to authorities having jurisdiction, for smoke control ratings indicated, based on testing according to UL 1784.

1. Provide smoke labeled perimeter gasketing at all smoke labeled openings.

C. Fire Labeled Gasketing: Assemblies complying with NFPA 80 that are listed and labeled by a testing and inspecting agency acceptable to authorities having jurisdiction, for fire ratings indicated, based on testing according to UL-10C.

1. Provide intumescent seals as indicated to meet UL10C Standard for Positive Pressure Fire Tests of Door Assemblies, and NPFA 252, Standard Methods of Fire Tests of Door Assemblies.

D. Sound-Rated Gasketing: Assemblies that are listed and labeled by a testing and inspecting agency, for sound ratings indicated.

E. Replaceable Seal Strips: Provide only those units where resilient or flexible seal strips are easily replaceable and readily available from stocks maintained by manufacturer.

F. Manufacturers:

1. National Guard Products (NG).

2. Pemko (PE).

3. Reese Enterprises, Inc. (RE).

4. Or Equal.

5. Substitutions: See General Conditions 7.06, Substitutes.

2.13 FABRICATION

A. Fasteners: Provide door hardware manufactured to comply with published templates generally prepared for machine, wood, and sheet metal screws. Provide screws according to manufacturers recognized installation standards for application intended.

2.14 FINISHES

A. Standard: Designations used in the Hardware Sets and elsewhere indicate hardware finishes complying with ANSI/BHMA A156.18, including coordination with traditional U.S. finishes indicated by certain manufacturers for their products.

B. Provide quality of finish, including thickness of plating or coating (if any), composition, hardness, and other qualities complying with manufacturer's standards, but in no case less than specified by referenced standards for the applicable units of hardware

C. Protect mechanical finishes on exposed surfaces from damage by applying a strippable, temporary protective covering before shipping.

PART 3 - EXECUTION

3.01 EXAMINATION

A. Examine scheduled openings, with Installer present, for compliance with requirements for installation tolerances, labeled fire door assembly construction, wall and floor construction, and other conditions affecting performance.

B. Notify architect of any discrepancies or conflicts between the door schedule, door types, drawings and scheduled hardware. Proceed only after such discrepancies or conflicts have been resolved in writing.

3.02 PREPARATION

A. Hollow Metal Doors and Frames: Comply with ANSI/DHI A115 series.

B. Wood Doors: Comply with ANSI/DHI A115-W series.

3.03 INSTALLATION

A. Install each item of mechanical and electromechanical hardware and access control equipment to comply with manufacturer's written instructions and according to specifications.

1. Installers are to be trained and certified by the manufacturer on the proper installation and adjustment of fire, life safety, and security products including: hanging devices; locking devices; closing devices; and seals.

B. Mounting Heights: Mount door hardware units at heights indicated in following applicable publications, unless specifically indicated or required to comply with governing regulations:

1. Standard Steel Doors and Frames: DHI's "Recommended Locations for Architectural Hardware for Standard Steel Doors and Frames."

2. DHI TDH-007-20: Installation Guide for Doors and Hardware.

3. Where indicated to comply with accessibility requirements, comply with ANSI A117.1 "Accessibility Guidelines for Buildings and Facilities."

4. Provide blocking in drywall partitions where wall stops or other wall mounted hardware is located.

C. Retrofitting: Install door hardware to comply with manufacturer's published templates and written instructions. Where cutting and fitting are required to install door hardware onto or into surfaces that are later to be painted or finished in another way, coordinate removal, storage, and reinstallation of surface protective trim units with finishing work specified in Division 9 Sections. Do not install surface-mounted items until finishes have been completed on substrates involved.

D. Thresholds: Set thresholds for exterior and acoustical doors in full bed of sealant complying with requirements specified in Division 7 Section "Joint Sealants."

E. Storage: Provide a secure lock up for hardware delivered to the project but not yet installed. Control the handling and installation of hardware items so that the completion of the work will not be delayed by hardware losses before and after installation.

3.04 FIELD QUALITY CONTROL

A. Field Inspection (Punch Report): Reference Division 01 Sections “Closeout Procedures”. Produce project punch report for each installed door opening indicating compliance with approved submittals and verification hardware is properly installed, operating and adjusted. Include list of items to be completed and corrected, indicating the reasons or deficiencies causing the Work to be incomplete or rejected.

1. Organization of List: Include separate Door Opening and Deficiencies and Corrective Action Lists organized by Mark, Opening Remarks and Comments, and related Opening Images and Video Recordings.

3.05 ADJUSTING

A. Initial Adjustment: Adjust and check each operating item of door hardware and each door to ensure proper operation or function of every unit. Replace units that cannot be adjusted to operate as intended. Adjust door control devices to compensate for final operation of heating and ventilating equipment and to comply with referenced accessibility requirements.

3.06 CLEANING AND PROTECTION

A. Protect all hardware stored on construction site in a covered and dry place. Protect exposed hardware installed on doors during the construction phase. Install any and all hardware at the latest possible time frame.

B. Clean adjacent surfaces soiled by door hardware installation.

C. Clean operating items as necessary to restore proper finish. Provide final protection and maintain conditions that ensure door hardware is without damage or deterioration at time of owner occupancy.

3.07 DEMONSTRATION

A. Instruct Owner's maintenance personnel to adjust, operate, and maintain mechanical and electromechanical door hardware.

3.08 DOOR HARDWARE SETS

A. The hardware sets represent the design intent and direction of the owner and architect. They are a guideline only and should not be considered a detailed hardware schedule. Discrepancies, conflicting hardware and missing items should be brought to the attention of the architect with corrections made prior to the bidding process. Omitted items not included in a hardware set should be scheduled with the appropriate additional hardware required for proper application and functionality.

1. Quantities listed are for each pair of doors, or for each single door.
2. The supplier is responsible for handing and sizing all products.
3. Where multiple options for a piece of hardware are given in a single line item, the supplier shall provide the appropriate application for the opening.
4. At existing openings with new hardware the supplier shall field inspect existing conditions prior to the submittal stage to verify the specified hardware will work as required. Provide alternate solutions and proposals as needed.

B. Manufacturer’s Abbreviations:

1. MK – McKinney
2. RO – Rockwood
3. SA – SARGENT
4. NO – Norton
5. PE – Pemko
6. SU - Securitron

<u>SET: 1.0</u>
Doors 412b

1	Cylinder	As Required	US32D	SA
1	Balance of Hardware	By Door Mfg.		

SET: 2.0
Doors: 420a,420b

5	Hinge (Heavy Weight)	T4A3386 x NRP 4.5 x 4.5	US32D	MK
1	hinge (heavy weight)	T4A3386xNRP QC12 4-1/2" x 4-1/2"	US32D	MK
1	Concealed Vert. rod exit, exit only	19 43 MD8610 EO	US32D	SA
1	Fail Secure Exit Device	DG263 19 43 55 8976-24v ETL 815	US32D	SA
2	Door Closer	PR7500	689	NO
2	Kick Plate	K1050 10X1.5LDW CSK BEV	US32D-316	RO
2	Door stop	463-RKW	US32D	RO
1	Threshold	154SS FHSL14SS	-	PE
1	Rain Guard	346C	-	PE
1	Gasketing	S44GR	-	PE
2	Sweep	315SSN 36"	-	PE
1	Astragal	"Z" Type provided with HM Door	-	00
1	Frame Harness	QC-C1500 (as required)	-	MK
1	Door Harness	QC-C____ (as required)	-	MK
1	Card Reader	Provided by Access Control	-	-

SET: 3.0
Doors: 421a

2	Hinge (Heavy Weight)	T4A3386 x NRP 4.5 x 4.5	US32D	MK
1	hinge (Heavy weight)	T4A3386xNRP QC12 4-1/2" x 4-1/2"	US32D	MK
1	Electrified Mortise Lock	DG263 NAC-82271-24v LNL	US 32D	SA
1	Door Closer	PR7500	689	NO
1	Kick Plate	K1050 10X1.5LDW CSK BEV	US32D-316	RO
1	Doorstop	463-RKW	US32D	RO
1	Threshold	154SS FHSL14SS	-	PE
1	Rain Guard	346C	-	PE
1	Gasketing	S44GR	-	PE
1	Sweep	315SSN 36"	-	PE
1	Frame Harness	QC-C1500 (as required)	-	MK
1	Door Harness	QC-C____ (as required	-	MK
1	Card Reader	Provided by Access Control	-	-

<u>SET 4.0</u>

Doors: 871A, 871B

2	Hinge (Heavy Weight)	T4A3386 x NRP 4.5 x 4.5	US32D	MK
1	Hinge (Heavy Weight)	T4A3386xNRP QC12 4-1/2" x 4-1/2"	US32D	MK
1	Fail Secure Exit Device	DG263 19 43 55 8976-24v ETL	US32D	SA
1	Door Closer	PR7500	689	NO
1	Kick Plate	K1050 10X1.5LDW CSK BEV	US32D-316	RO
1	Threshold	154SS FHSL14SS	-	PE
1	Rain Guard	346C	-	PE
1	Gasketing	S44GR	-	PE
1	Frame Harness	QC-C1500 (AS REQUIRED)	-	MK
1	Door Harness	QC-C____ (AS REQUIRED)	-	MK
1	Card Reader	PROVIDED BY ACCESS CONTROL	-	-

NOTES: VERIFY EXISTING OPENING.

END OF SECTION

SECTION 08 80 00

GLAZING

PART 1 - GENERAL

1.01 SECTION INCLUDES

A. Insulating glass units.

1.02 RELATED REQUIREMENTS

A. Section 07 92 00 - Joint Sealants: Sealants for other than glazing purposes.

B. Section 08 11 13 - Hollow Metal Doors and Frames: Glazed lites in doors and borrowed lites.

1.03 REFERENCE STANDARDS

A. 16 CFR 1201 - Safety Standard for Architectural Glazing Materials Current Edition.

B. ANSI Z97.1 - American National Standard for Safety Glazing Materials Used in Buildings - Safety Performance Specifications and Methods of Test 2015.

C. ASCE 7 - Minimum Design Loads and Associated Criteria for Buildings and Other Structures Most Recent Edition Cited by Referring Code or Reference Standard.

D. ASTM C1036 - Standard Specification for Flat Glass 2016.

E. ASTM C1172 - Standard Specification for Laminated Architectural Flat Glass 2014.

F. ASTM C1376 - Standard Specification for Pyrolytic and Vacuum Deposition Coatings on Flat Glass 2015.

G. ASTM E1300 - Standard Practice for Determining Load Resistance of Glass in Buildings 2016.

H. ASTM E2190 - Standard Specification for Insulating Glass Unit Performance and Evaluation 2010.

I. NFRC 100 - Procedure for Determining Fenestration Product U-factors 2017.

J. NFRC 200 - Procedure for Determining Fenestration Product Solar Heat Gain Coefficient and Visible Transmittance at Normal Incidence 2014, with Errata (2017).

K. NFRC 300 - Test Method for Determining the Solar Optical Properties of Glazing Materials and Systems 2017.

1.04 SUBMITTALS

A. See Section 01 33 00 - Submittals, for submittal procedures.

1.05 FIELD CONDITIONS

A. Do not install glazing when ambient temperature is less than 40 degrees F (4 degrees C).

1.06 WARRANTY

A. See Section 01 78 36 – Warranties and Bonds, for additional warranty requirements.

PART 2 - PRODUCTS

2.01 MANUFACTURERS

A. Glass Fabricators:

1. GGI - General Glass International: www.generalglass.com/#sle
2. JE Berkowitz, LP: www.jeberkowitz.com/#sle
3. Standard Bent Glass Corp: www.standardbent.com/#sle
4. Viracon, Inc: www.viracon.com/#sle
5. Or equal.
6. Substitutions: See General Conditions 7.06, Substitutes.

2.02 PERFORMANCE REQUIREMENTS - EXTERIOR GLAZING ASSEMBLIES

A. Provide type and thickness of exterior glazing assemblies to support assembly dead loads, and to withstand live loads caused by positive and negative wind pressure acting normal to plane of glass.

1. Comply with ASTM E1300 for design load resistance of glass type, thickness, dimensions, and maximum lateral deflection of supported glass.
2. Provide glass edge support system sufficiently stiff to limit the lateral deflection of supported glass edges to less than 1/175 of their lengths under specified design load.
3. Glass thicknesses listed are minimum.

B. Vapor Retarder and Air Barrier Seals: Provide completed assemblies that maintain continuity of building enclosure vapor retarder and air barrier.

1. In conjunction with vapor retarder and joint sealer materials described in other sections.

C. Thermal and Optical Performance: Provide exterior glazing products with performance properties as indicated. Performance properties are in accordance with manufacturer's published data as determined with the following procedures and/or test methods:

1. Center of Glass U-Value: Comply with NFRC 100 using Lawrence Berkeley National Laboratory (LBNL) WINDOW 6.3 computer program.
2. Center of Glass Solar Heat Gain Coefficient (SHGC): Comply with NFRC 200 using Lawrence Berkeley National Laboratory (LBNL) WINDOW 6.3 computer program.
3. Solar Optical Properties: Comply with NFRC 300 test method.

2.03 GLASS MATERIALS

A. Float Glass: Provide float glass based glazing unless otherwise indicated.

1. Annealed Type: ASTM C1036, Type I - Transparent Flat, Class 1 - Clear, Quality - Q3.
2. Thicknesses: As indicated; provide greater thickness as required for exterior glazing wind load design.

B. Laminated Glass: Float glass laminated in accordance with ASTM C1172.

1. Laminated Safety Glass: Complies with ANSI Z97.1 - Class B or 16 CFR 1201 - Category I impact test requirements.

2.04 INSULATING GLASS UNITS

A. Manufacturers:

1. AGC Glass North America, Inc: www.agcglass.com/#sle
2. Cardinal Glass Industries: www.cardinalcorp.com/#sle
3. Goldray Industries, Inc; Spandrel Glass: www.goldrayglass.com/#sle
4. Guardian Glass, LLC: www.guardianglass.com/#sle
5. Pilkington North America Inc: www.pilkington.com/na/#sle.Pilkington North America Inc: www.pilkington.com/na/#sle
6. Viracon, Apogee Enterprises, Inc: www.viracon.com/#sle
7. Vitro Architectural Glass (formerly PPG Glass): www.vitroglazings.com/#sle
8. Or equal.
9. Substitutions: See General Conditions 7.06, Substitutes.

B. Insulating Glass Units: Types as indicated.

1. Durability: Certified by an independent testing agency to comply with ASTM E2190.
2. Coated Glass: Comply with requirements of ASTM C1376 for pyrolytic (hard-coat) or magnetic sputter vapor deposition (soft-coat) type coatings on flat glass; coated vision glass, Kind CV; coated overhead glass, Kind CO; or coated spandrel glass, Kind CS.
3. Metal Edge Spacers: Aluminum, bent and soldered corners.
4. Spacer Color: Black.
5. Edge Seal:
   a. Color: Black.
6. Purge interpane space with dry air, hermetically sealed.

PART 3 - EXECUTION

3.01 VERIFICATION OF CONDITIONS

A. Verify that openings for glazing are correctly sized and within tolerances, including those for size, squareness, and offsets at corners.

B. Verify that the minimum required face and edge clearances are being provided.

C. Verify that surfaces of glazing channels or recesses are clean, free of obstructions that may impede moisture movement, weeps are clear, and support framing is ready to receive glazing system.

D. Verify that sealing between joints of glass framing members has been completed effectively.

E. Proceed with glazing system installation only after unsatisfactory conditions have been corrected.

3.02 INSTALLATION, GENERAL

A. Install glazing in compliance with written instructions of glass, gaskets, and other glazing material manufacturers, unless more stringent requirements are indicated, including those in glazing referenced standards.

END OF SECTION

SECTION 09 21 16

GYPSUM BOARD ASSEMBLIES

PART 1 - GENERAL

1.01 SECTION INCLUDES

A. Gypsum wallboard.

B. Joint treatment and accessories.

1.02 RELATED REQUIREMENTS

A. None.

1.03 REFERENCE STANDARDS

A. ASTM C475/C475M - Standard Specification for Joint Compound and Joint Tape for Finishing Gypsum Board 2017.

B. ASTM C840 - Standard Specification for Application and Finishing of Gypsum Board 2020.

C. ASTM C1047 - Standard Specification for Accessories for Gypsum Wallboard and Gypsum Veneer Base 2019.

D. ASTM C1396/C1396M - Standard Specification for Gypsum Board 2017.

E. ASTM D3273 - Standard Test Method for Resistance to Growth of Mold on the Surface of Interior Coatings in an Environmental Chamber 2021.

F. GA-216 - Application and Finishing of Gypsum Panel Products 2021.

1.04 SUBMITTALS

A. See Section 01.33.00 - Submittals for submittal procedures.

B. Samples: Submit two samples of gypsum board finished with proposed texture application, 12 by 12 inches (300 by 300 mm) in size, illustrating finish color and texture.

1.05 QUALITY ASSURANCE

A. Installer Qualifications: Company specializing in performing gypsum board installation and finishing, with minimum five years of experience.

PART 2 - PRODUCTS

2.01 BOARD MATERIALS

A. Manufacturers - Gypsum-Based Board:

1. American Gypsum Company: www.americangypsum.com/#sle.

2. CertainTeed Corporation: www.certainteed.com/#sle.

3. Georgia-Pacific Gypsum: www.gpgypsum.com/#sle.

4. USG Corporation: www.usg.com/#sle.

5. Or equal.

6. Substitutions: See General Conditions 7.06, Substitutes.

B. Gypsum Wallboard: Paper-faced gypsum panels as defined in ASTM C1396/C1396M; sizes to minimize joints in place; ends square cut.

1. Application: Use for vertical surfaces and ceilings, unless otherwise indicated.

2. Mold Resistance: Score of 10, when tested in accordance with ASTM D3273.

3. Thickness:

a. As shown on Drawings.

2.02 GYPSUM WALLBOARD ACCESSORIES

A. Finishing Accessories: ASTM C1047, galvanized steel or rolled zinc, unless noted otherwise.

1. Types: As detailed or required for finished appearance.

2. Special Shapes: In addition to conventional corner bead and control joints, provide U-bead at exposed panel edges.

B. Joint Materials: ASTM C475/C475M and as recommended by gypsum board manufacturer for project conditions.

C. Anchorage to Substrate: Tie wire, nails, screws, and other metal supports, of type and size to suit application; to rigidly secure materials in place.

PART 3 - EXECUTION

3.01 EXAMINATION

A. Verify that project conditions are appropriate for work of this section to commence.

3.02 BOARD INSTALLATION

A. Comply with ASTM C840, GA-216, and manufacturer's instructions. Install to minimize butt end joints, especially in highly visible locations.

B. Single-Layer Nonrated: Install gypsum board in most economical direction, with ends and edges occurring over firm bearing.

1. Exception: Tapered edges to receive joint treatment at right angles to framing.

3.03 INSTALLATION OF TRIM AND ACCESSORIES

A. Control Joints: Place control joints consistent with lines of building spaces and as indicated.

B. Corner Beads: Install at external corners, using longest practical lengths.

C. Edge Trim: Install at locations where gypsum board abuts dissimilar materials.

3.04 JOINT TREATMENT

A. Finish gypsum board in accordance with levels defined in ASTM C840, as follows:

1. Level 5: Walls and ceilings to receive semi-gloss or gloss paint finish and other areas specifically indicated.

2. Level 4: Walls and ceilings to receive paint finish or wall coverings, unless otherwise indicated.

3. Level 3: Walls to receive textured wall finish.

4. Level 2: In utility areas, behind cabinetry, and on backing board to receive tile finish.

B. Tape, fill, and sand exposed joints, edges, and corners to produce smooth surface ready to receive finishes.

1. Feather coats of joint compound so that camber is maximum 1/32 inch (0.8 mm).

C. Where Level 5 finish is indicated, spray apply high build drywall surfacer over entire surface after joints have been properly treated; achieve a flat and tool mark-free finish.

3.05 TOLERANCES

A. Maximum Variation of Finished Gypsum Board Surface from True Flatness: 1/8 inch in 10 feet (3 mm in 3 m) in any direction.

END OF SECTION

(THIS PAGE LEFT BLANK INTENTIONALLY)

SECTION 09 91 13

EXTERIOR PAINTING

PART 1 - GENERAL

1.01 SECTION INCLUDES

A. Surface preparation.

B. Field application of paints.

C. Scope: Finish exterior surfaces exposed to view, unless fully factory-finished and unless otherwise indicated.

D. Do Not Paint or Finish the Following Items:

1. Items factory-finished unless otherwise indicated; materials and products having factory-applied primers are not considered factory finished.

2. Items indicated to receive other finishes.

3. Items indicated to remain unfinished.

4. Fire rating labels, equipment serial number and capacity labels, and operating parts of equipment.

5. Floors, unless specifically indicated.

6. Glass.

7. Concealed pipes, ducts, and conduits.

1.02 RELATED REQUIREMENTS

A. Section 09 91 23 - Interior Painting.

1.03 DEFINITIONS

A. Comply with ASTM D16 for interpretation of terms used in this section.

1.04 REFERENCE STANDARDS

A. ASTM D16 - Standard Terminology for Paint, Related Coatings, Materials, and Applications 2019.

B. MPI (APSM) - Master Painters Institute Architectural Painting Specification Manual Current Edition.

C. SSPC-SP 1 - Solvent Cleaning 2015, with Editorial Revision (2016).

D. SSPC-SP 6 - Commercial Blast Cleaning 2007.

1.05 SUBMITTALS

A. See Section 01 33 00 - Submittals, for submittal procedures.

B. Product Data: Provide complete list of products to be used, with the following information for each:

1. Manufacturer's name, product name and/or catalog number, and general product category (e.g. "alkyd enamel").

2. MPI product number (e.g. MPI #47).

3. Cross-reference to specified paint system(s) product is to be used in; include description of each system.

4. Manufacturer's installation instructions.

5. If proposal of substitutions is allowed under submittal procedures, explanation of substitutions proposed.

C. Samples: Submit three paper "draw down" samples, 8-1/2 by 11 inches (216 by 279 mm) in size, illustrating range of colors available for each finishing product specified.

1. Where sheen is specified, submit samples in only that sheen.

2. Allow 30 days for approval process, after receipt of complete samples by Architect.

3. Paint color submittals will not be considered until color submittals for major materials not to be painted, such as masonry, have been approved.

D. Manufacturer's Instructions: Indicate special surface preparation procedures.

E. Maintenance Data: Submit data including finish schedule showing where each product/color/finish was used, product technical data sheets, material safety data sheets (MSDS), care and cleaning instructions, touch-up procedures, repair of painted and finished surfaces, and color samples of each color and finish used.

F. Maintenance Materials: Furnish the following for Owner's use in maintenance of project.

1. Extra Paint and Finish Materials: 1 gallon (4 L) of each color; from the same product run, store where directed.

2. Label each container with color in addition to the manufacturer's label.

1.06 QUALITY ASSURANCE

A. Manufacturer Qualifications: Company specializing in manufacturing the products specified, with minimum five years documented experience.

B. Applicator Qualifications: Company specializing in performing the type of work specified with minimum five years experience and approved by manufacturer.

1.07 MOCK-UP

A. Mockups: Apply benchmark samples of each paint system indicated and each color and finish selected to verify preliminary selections made under sample submittals and to demonstrate aesthetic effects and set quality standards for materials and execution.

1. Architect will select one surface to represent surfaces and conditions for application of each paint system specified in Part 3.

   a. Vertical and Horizontal Surfaces: Provide samples of at least 25 sq. ft. (2.33 sq. m).

   b. Other Items: Architect will designate items or areas required.

2. Final approval of color selections will be based on benchmark samples.

   a. If preliminary color selections are not approved, apply additional benchmark samples of additional colors selected by Architect at no added cost to Owner.

B. Provide door and frame assembly illustrating paint color, texture, and finish.

   1. Locate where directed by Architect.

C. Mock-up may remain as part of the work.

1.08 DELIVERY, STORAGE, AND HANDLING

A. Deliver products to site in sealed and labeled containers; inspect to verify acceptability.

B. Container Label: Include manufacturer's name, type of paint, brand name, lot number, brand code, coverage, surface preparation, drying time, cleanup requirements, color designation, and instructions for mixing and reducing.

C. Paint Materials: Store at minimum ambient temperature of 45 degrees F (7 degrees C) and a maximum of 90 degrees F (32 degrees C), in ventilated area, and as required by manufacturer's instructions.

1.09 FIELD CONDITIONS

A. Do not apply materials when surface and ambient temperatures are outside the temperature ranges required by the paint product manufacturer.

B. Follow manufacturer's recommended procedures for producing best results, including testing of substrates, moisture in substrates, and humidity and temperature limitations.

C. Provide lighting level of 80 ft candles (860 lx) measured mid-height at substrate surface.

PART 2 - PRODUCTS

2.01 MANUFACTURERS

A. Provide paints and finishes from the same manufacturer to the greatest extent possible.

   1. In the event that a single manufacturer cannot provide specified products, minor exceptions will be permitted provided approval by Architect is obtained using the specified procedures for substitutions.

   2. Substitution of MPI-approved products by a different manufacturer is preferred over substitution of unapproved products by the same manufacturer.

B. Paints:

   1. Behr Process Corporation: www.behr.com/#sle .

2. Cloverdale Paint, Brand Products of Rodda Paint Company: www.cloverdalepaint.com/#sle .

3. Diamond Vogel Paints: www.diamondvogel.com/#sle .

4. Dow Chemical Company: www.consumer.dow.com/en-us/industry/ind-building-construction.html/#sle.

5. PPG Paints: www.ppgpaints.com/#sle .

6. Prosoco, Inc.: www.prosoco.com

7. Rainguard Brands, LLC.: www.rainguardpro.com

8. Rodda Paint Company: www.roddapaint.com/#sle .

9. Sherwin-Williams Company: www.sherwin-williams.com/#sle .

C. Primer Sealers: Same manufacturer as top coats.

2.02 PAINTS AND FINISHES - GENERAL

A. Paints and Finishes: Ready mixed, unless required to be a field-catalyzed paint.

1. Provide paints and finishes of a soft paste consistency, capable of being readily and uniformly dispersed to a homogeneous coating, with good flow and brushing properties, and capable of drying or curing free of streaks or sags.

2. Supply each paint material in quantity required to complete entire project's work from a single production run.

3. Do not reduce, thin, or dilute paint or finishes or add materials unless such procedure is specifically described in manufacturer's product instructions.

2.03 PAINT SYSTEMS - EXTERIOR

A. Paint E-OP - Exterior Surfaces to be Painted, Unless Otherwise Indicated: Primed Metal.

1. Two top coats and one coat primer.

2. Top Coat(s): Exterior Latex; MPI #10, 11, 15, 119, or 214.

a. Products:

1) Behr Marquee Exterior Satin Enamel [No. 9450]. (MPI #15)

2) PPG Paints Speedhide Exterior Latex Satin, 6-2045XI Series. (MPI #15)

3) Rodda Protector Satin, 532201. (MPI #15)

4) Sherwin-Williams Resilience, Satin. (MPI #15)

5) Substitutions: See General Conditions 7.06, Substitutes.

B. Paint S-GR - Exterior Surfaces to be Painted, Unless Otherwise Indicated: Sealer and Graffiti Control: Concrete, Concrete Masonry Units

C. Top Coat(s) and surface prep: per Manufacturer Recommendation:

1. Products:

a. Prosoco, Inc.: Sure Klean Weather Seal Blok-Guard & Graffiti Control 15

b. Rainguard Brands, LLC: Micro-Seal

c. or equal

d. Substitutions: See General Conditions 7.06, Substitutes

2.04 PRIMERS

A. Primers: Provide the following unless other primer is required or recommended by manufacturer of top coats.

1. Anti-Corrosive Alkyd Primer for Metal; MPI #79.

a. Products:

1) PPG Paints Speedhide Interior/Exterior Rust Inhibitive Steel Primer, 6-212 Series. (MPI #79)

2) PPG Paints: 4160 Series Multiprime Multi-Purpose Primer. (MPI #23, #76, #79, #95)

3) Rodda Barrier III HS Metal Primer, 708295. (MPI #79)

4) Or Equal.

5) Substitutions: See General Conditions 7.06, Substitutes.

2. Water Based Primer for Galvanized Metal; MPI #134.

a. Products:

1) Behr Premium Plus Interior/Exterior Multi-Surface Primer and Sealer [No. 436]. (MPI #134)

2) PPG Paints: 4020 PF Pitt-Tech Plus Interior/Exterior Waterborne Acrylic Primer Finish DTM Industrial Enamel. (MPI #134).

3) Sherwin-Williams DTM Primer/Finish (MPI #134)

4) Or Equal.

5) Substitutions: See General Conditions 7.06, Substitutes.

2.05 ACCESSORY MATERIALS

A. Accessory Materials: Provide primers, sealers, cleaning agents, cleaning cloths, sanding materials, and clean-up materials as required for final completion of painted surfaces.

B. Patching Material: Latex filler.

C. Fastener Head Cover Material: Latex filler.

PART 3 - EXECUTION

3.01 EXAMINATION

A. Do not begin application of paints and finishes until substrates have been properly prepared.

B. Verify that surfaces are ready to receive work as instructed by the product manufacturer.

C. Examine surfaces scheduled to be finished prior to commencement of work. Report any condition that may potentially effect proper application.

D. Test shop-applied primer for compatibility with subsequent cover materials.

3.02 PREPARATION

A. Clean surfaces thoroughly and correct defects prior to application.

B. Prepare surfaces using the methods recommended by the manufacturer for achieving the best result for the substrate under the project conditions.

C. Remove or mask surface appurtenances, including electrical plates, hardware, light fixture trim, escutcheons, and fittings, prior to preparing surfaces for finishing.

D. Seal surfaces that might cause bleed through or staining of topcoat.

E. Remove mildew from impervious surfaces by scrubbing with solution of tetra-sodium phosphate and bleach. Rinse with clean water and allow surface to dry.

F. Concrete:

G. Masonry:

H. Ferrous Metal:

1. Solvent clean according to SSPC-SP 1.

2. Remove rust, loose mill scale, and other foreign substances using using methods recommended in writing by paint manufacturer and blast cleaning according to SSPC-SP 6 "Commercial Blast Cleaning". Protect from corrosion until coated.

I. Glue-Laminated Beams: Prior to finishing, wash surfaces with solvent, remove grease and dirt.

J. Metal Doors to be Painted: Prime metal door top and bottom edge surfaces.

3.03 APPLICATION

A. Remove unfinished louvers, grilles, covers, and access panels on mechanical and electrical components and paint separately.

B. Apply products in accordance with manufacturer's written instructions and recommendations in "MPI Architectural Painting Specification Manual".

C. Do not apply finishes to surfaces that are not dry. Allow applied coats to dry before next coat is applied.

D. Apply each coat to uniform appearance.

E. Vacuum clean surfaces of loose particles. Use tack cloth to remove dust and particles just prior to applying next coat.

F. Reinstall electrical cover plates, hardware, light fixture trim, escutcheons, and fittings removed prior to finishing.

3.04 CLEANING

A. Collect waste material that could constitute a fire hazard, place in closed metal containers, and remove daily from site.

3.05 PROTECTION

A. Protect finishes until completion of project.

3.06 COLOR SCHEDULE

Item	Tag on Drawing or Specs	Description	Location on/in Building
Paint – 1	PNT-1	White Paint	All Walls in Process Buildings/Spaces

END OF SECTION

(THIS PAGE LEFT BLANK INTENTIONALLY)

SECTION 09 91 23

INTERIOR PAINTING

PART 1 - GENERAL

1.01 SECTION INCLUDES

A. Surface preparation.

B. Field application of paints.

C. Scope: Finish interior surfaces exposed to view, unless fully factory-finished andunless otherwise indicated.

1. Both sides and edges of plywood backboards for electrical and telecomequipment before installing equipment.

2. Prime surfaces to receive wall coverings.

D. Do Not Paint or Finish the Following Items:

1. Items factory-finished unless otherwise indicated; materials and productshaving factory-applied primers are not considered factory finished.

2. Items indicated to receive other finishes.

3. Items indicated to remain unfinished.

4. Fire rating labels, equipment serial number and capacity labels, bar codelabels, and operating parts of equipment.

5. Floors, unless specifically indicated.

6. Ceramic and other tiles.

7. Glass.

8. Concealed pipes, ducts, and conduits.

1.02 RELATED REQUIREMENTS

A. Section 09 91 13 - Exterior Painting.

1.03 DEFINITIONS

A. Comply with ASTM D16 for interpretation of terms used in this section.

1.04 REFERENCE STANDARDS

A. 40 CFR 59, Subpart D - National Volatile Organic Compound Emission Standards for Architectural Coatings; U.S. Environmental Protection Agency current edition.

B. ASTM D16 - Standard Terminology for Paint, Related Coatings, Materials, andApplications 2019.

C. ASTM D4442 - Standard Test Methods for Direct Moisture ContentMeasurement of Wood and Wood-Based Materials 2020.

D. CARB (SCM) - Suggested Control Measure for Architectural Coatings; California Air Resources Board 2020.

E. MPI (APSM) - Master Painters Institute Architectural Painting SpecificationManual Current Edition.

F. SCAQMD 1113 - Architectural Coatings 1977, with Amendment (2016).

1.05 SUBMITTALS

A. See Section 01 33 00 - Submittals, for submittal procedures.

1.06 DELIVERY, STORAGE, AND HANDLING

A. Deliver products to site in sealed and labeled containers; inspect to verifyacceptability.

B. Container Label: Include manufacturer's name, type of paint, brand name, lotnumber, brand code, coverage, surface preparation, drying time, cleanup requirements, color designation, and instructions for mixing and reducing.

C. Paint Materials: Store at minimum ambient temperature of 45 degrees F (7 degrees C) and a maximum of 90 degrees F (32 degrees C), in ventilated area,and as required by manufacturer's instructions.

1.07 FIELD CONDITIONS

A. Do not apply materials when surface and ambient temperatures are outside the temperature ranges required by the paint product manufacturer.

B. Follow manufacturer's recommended procedures for producing best results, including testing of substrates, moisture in substrates, and humidity and temperature limitations.

C. Provide lighting level of 80 ft candles (860 lx) measured mid-height at substratesurface.

PART 2 - PRODUCTS

2.01 MANUFACTURERS

A. Provide paints and finishes from the same manufacturer to the greatest extentpossible.

B. Substitution of MPI-approved products by a different manufacturer ispreferred over substitution of unapproved products by the same manufacturer.

C. Paints:

1. Behr Process Corporation: www.behr.com/#sle.
2. Miller Paint Company: www.millerpaint.com
3. PPG Paints: www.ppgpaints.com/#sle.
4. Rodda Paint Co: www.roddapaint.com/#sle.
5. Sherwin-Williams Company: www.sherwin-williams.com/#sle.
6. Or Equal.

D. Primer Sealers: Same manufacturer as top coats.

2.02 PAINTS AND FINISHES - GENERAL

A. Paints and Finishes: Ready mixed, unless intended to be a field-catalyzed paint.

1. Provide paints and finishes of a soft paste consistency, capable of beingreadily and uniformly dispersed to a homogeneous coating, with good flow and brushing properties, and capable of drying or curing free of streaks or sags.

2. Supply each paint material in quantity required to complete entireproject's work from a single production run.

3. Do not reduce, thin, or dilute paint or finishes or add materials unless such procedure is specifically described in manufacturer's product instructions.

B. Volatile Organic Compound (VOC) Content:

1. Provide paints and finishes that comply with the most stringentrequirements specified in the following:

a. 40 CFR 59, Subpart D--National Volatile Organic Compound Emission Standards for Architectural Coatings.

b. SCAQMD 1113 Rule.

c. CARB (SCM).

2. Determination of VOC Content: Testing and calculation in accordance with 40 CFR 59, Subpart D (EPA Method 24), exclusive of colorants addedto a tint base and water added at project site; or other method acceptable to authorities having jurisdiction.

C. Colors: As indicated on drawings.

2.03 PAINT SYSTEMS - INTERIOR

A. Interior Surfaces to be Painted, Unless Otherwise Indicated: Including gypsumboard.

1. Two top coats and one coat primer.

2. Top Coat(s): Institutional Low Odor/VOC Interior Latex; MPI #143, 144,145, 146, 147, or 148.

3. Top Coat Sheen:

a. Semi-Gloss: MPI gloss level 5; use this sheen at all locations unless otherwise noted.

B. Medium Duty Door/Trim: For surfaces subject to frequent contact by occupants,including metals and wood:

1. Medium duty applications include doors and door frames.

2. Two top coats and one coat primer.

3. Top Coat(s): Interior Light Industrial Coating, Water Based; MPI #151,153 or 154.

4. Top Coat Sheen:

a. Semi-Gloss: MPI gloss level 5; use this sheen at all locations unless otherwise noted.

5. Primer: As recommended by top coat manufacturer for specificsubstrate.

C. Transparent Finish on Concrete Floors.

1. 1 coat stain.

2. Sealer: Water Based Sealer for Concrete Floors; MPI #99.

3. Sealer Sheen:

a. Eggshell: MPI gloss level 3; use this sheen at all locations.

2.04 PRIMERS

A. Primers: Provide the following unless other primer is required or recommended by manufacturer of top coats.

1. Interior Institutional Low Odor/VOC Primer Sealer; MPI #149.

2. Interior/Exterior Latex Block Filler; MPI #4.

2.05 ACCESSORY MATERIALS

A. Accessory Materials: Provide primers, sealers, cleaning agents, cleaning cloths,sanding materials, and clean-up materials as required for final completion of painted surfaces.

B. Patching Material: Latex filler.

C. Fastener Head Cover Material: Latex filler.

PART 3 - EXECUTION

3.01 EXAMINATION

A. Do not begin application of paints and finishes until substrates have been properly prepared.

B. Verify that surfaces are ready to receive work as instructed by the productmanufacturer.

C. Examine surfaces scheduled to be finished prior to commencement of work. Report any condition that may potentially effect proper application.

D. Test shop-applied primer for compatibility with subsequent cover materials.

E. Measure moisture content of surfaces using an electronic moisture meter. Donot apply finishes unless moisture content of surfaces are below the followingmaximums:

1. Gypsum Wallboard: 12 percent.

2. Masonry, Concrete, and Concrete Masonry Units: 12 percent.

3. Interior Wood: 15 percent, measured in accordance with ASTM D4442.

4. Concrete Floors and Traffic Surfaces: 8 percent.

3.02 PREPARATION

A. Clean surfaces thoroughly and correct defects prior to application.

B. Prepare surfaces using the methods recommended by the manufacturer forachieving the best result for the substrate under the project conditions.

C. Remove or mask surface appurtenances, including electrical plates, hardware,light fixture trim, escutcheons, and fittings, prior to preparing surfaces or finishing.

D. Seal surfaces that might cause bleed through or staining of topcoat.E Concrete:

1. Remove release agents, curing compounds, efflorescence, and chalk. Do not coat surfaces if moisture content or alkalinity of surfaces to be coatedexceeds that permitted in manufacturer's written instructions.

E. Masonry:

1. Remove efflorescence and chalk. Do not coat surfaces if moisture content or alkalinity of surfaces or if alkalinity of mortar joints exceedthat permitted in manufacturer's written instructions. Allow to dry.

2. Prepare surface as recommended by top coat manufacturer.

F. Concrete Floors and Traffic Surfaces: Remove contamination, acid etch, andrinse floors with clear water. Verify required acid-alkali balance is achieved. Allow to dry.

G. Gypsum Board: Fill minor defects with filler compound. Spot prime defects afterrepair.

H. Wood Surfaces to Receive Opaque Finish: Wipe off dust and grit prior to priming. Seal knots, pitch streaks, and sappy sections with sealer. Fill nail holesand cracks after primer has dried; sand between coats. Back prime concealed surfaces before installation.

I. Wood Doors to be Field-Finished: Seal wood door top and bottom edge surfaceswith clear sealer.

3.03 APPLICATION

A. Apply products in accordance with manufacturer's written instructions and recommendations in "MPI Architectural Painting Specification Manual".

B. Do not apply finishes to surfaces that are not dry. Allow applied coats to drybefore next coat is applied.

C. Apply each coat to uniform appearance in thicknesses specified bymanufacturer.

D. Sand wood and metal surfaces lightly between coats to achieve required finish.

E. Vacuum clean surfaces of loose particles. Use tack cloth to remove dust andparticles just prior to applying next coat.

F. Reinstall electrical cover plates, hardware, light fixture trim, escutcheons, andfittings removed prior to finishing.

3.04 CLEANING

A. Collect waste material that could constitute a fire hazard, place in closed metalcontainers, and remove daily from site.

3.05 PROTECTION

A. Protect finishes until completion of project.

END OF SECTION

(THIS PAGE LEFT BLANK INTENTIONALLY)

SECTION 09 96 00

HIGH PERFORMANCE COATINGS

PART 1 - GENERAL

1.01 SECTION INCLUDES

A. Materials, surface preparation, application, curing, and inspection for industrial, high-performance coatings on interior and exterior surfaces.

B. Furnish all labor, materials, tools and equipment required to perform surface preparation, coating work, and inspection as specified. Perform all subsidiary and incidental work necessary to complete the work in conformance with the project requirements, to accomplish the approved end result of a totally protected and usable structure, including all attachments, accessories and appurtenances.

1.02 REFERENCED SECTIONS

A. The following Sections are referenced in this Section:

1. Section 01 33 00 – Submittals
2. Section 01 66 00 – Materials and Equipment
3. Section 01 99 90 – Reference Forms

1.03 DEFINITIONS

A. Abrasive: Material used for blast-cleaning, such as grit.

B. Abrasive Blast Cleaning: Cleaning/surface preparation by abrasive propelled at high speed.

C. Anchor Pattern: Profile or texture of prepared surface(s).

D. Bug Holes: Small cavities, usually not exceeding 15 mm in diameter, resulting from entrapment of air bubbles in the surface of formed concrete during placement and compaction.

E. Coating/Lining Thickness: The total thickness of primer, intermediate and/or finish coats.

F. Dewpoint: Temperature of a given air/water vapor mixture at which condensation starts.

G. Dry Film Thickness (DFT): Depth of cured film, usually expressed in mils (0.001-inch). Use this definition as opposed to existing definition.

H. Drying Time: Time interval between application and curing of material.

I. Dry to Recoat: Time interval between application of material and ability to receive next coat.

J. Dry to Touch: Time interval between application of material and ability to touch lightly without damage.

K. Feather Edging: Reducing the thickness of the edge of paint.

L. Feathering: Operation of tapering off the edge of a point with a comparatively dry brush.

M. Field Coat: The application or the completion of application of the coating system after installation of the surface at the site of the work.

N. Hold Point: A defined point, specified in this Section 09 96 00, at which work shall be halted for inspection.

O. Holiday: A discontinuity, skip, or void in coating or coating system film that exposes the underlying substrate.

P. Honeycomb: Segregated condition of hardened concrete due to non-consolidation.

Q. Incompatibility: Inability of a coating to perform well over another coating because of bleeding, poor bonding, or lifting of old coating; inability of a coating to perform well on a substrate.

R. Laitance: A layer of weak, non-durable concrete containing cement fine that is brought to the surface through bleed water as a result of concrete finishing/overfinishing.

S. Mil: 0.001-inch.

T. Overspray: Dry spray, particularly such paint that failed to strike the intended surface.

U. Pinhole: A small diameter discontinuity in a coating or coating system film that is typically created by outgassing of air from a void in a concrete substrate resulting in exposure of the substrate or a void between coats.

V. Pot Life: Time interval after mixing of components during which the coating can be satisfactorily applied.

W. Resurfacer/Resurfacing Material: A layer of cementitious and/or resin-sed material used to fill or otherwise restore surface continuity to worn or damaged concrete surfaces.

X. Shelf Life: Maximum storage time for which a material may be stored without losing its usefulness.

Y. Shop Coat: One or more coats applied in a shop or plant prior to shipment to the site of the work, where the field or finishing coat is applied.

Z. Spreading Rate: Surface area covered by a unit volume of paint at a specific film thickness.

AA. Stripe Coat: (SSPC Guide 11) A separate coat of paint applied to all weld seems, pits, nuts/bolts/washers, and edges by brush. This coat shall not be applied until any previous coat(s) have cured and, once applied, shall be allowed to cure prior to the application of the subsequent coat(s).

BB. Surface Saturated Dry (SSD): Refers to concrete surface condition where the surface is saturated (damp) without the presence of standing water.

CC. Tie Coat: An intermediate coat used to bond different types of coatings. Coatings used to improve the adhesion of a succeeding coat.

DD. Touch-Up Painting: The application of paint on areas of painted surfaces to repair marks, scratches, and areas where the coating has deteriorated to restore the coating film to an unbroken condition.

EE. Volatile Organic Compound (VOC) Content: The portion of the coating that is a compound of carbon, is photo chemically reactive, and evaporates during drying or curing, expressed in grams per liter (g/l) or pounds per gallon (lb/gal).

FF. Immersion: Refers to a service condition in which the substrate is below the waterline or submerged in water or wastewater at least intermittently if not constantly.

GG. Weld Spatter: (NACE SPO-178) Beads of metal scattered near seam during welding.

HH. Wet Film Thickness (WFT): The primer or coating film's thickness immediately following application. Wet film thickness is measured in mils or thousandths of an inch (0.001-inch) and is abbreviated WFT.

1.04 REFERENCES

A. ANSI – American National Standards Institute

B. ASTM – American Society for Testing and Materials

C. CSA – Canadian Standards Association

D. IAPMO – International Association of Plumbing and Mechanical Officials

E. SSPC – The Society for Protective Coatings

F. NACE International – National Association of Corrosion Engineers International

G. NSF International – National Sanitation Foundation International

H. UL – Underwriters Laboratories

I. WQA – Water Quality Association

1.05 SUBMITTALS

A. Comply with Section 01 33 00.

B. Finish Schedule

1. Submit a complete Finish Schedule that includes the surfaces in the Finish Schedule herein and any additional surfaces to be coated by the products submitted under this Section 09 96 00. Indicate the specific products and manufacturer for each item (equipment, substrate, or structure) to be coated.

2. Submit a color card or fan deck for each manufacturer and coating product submitted. Items in the complete Finish Schedule shall be confirmed with Owner-approved colors for each location prior to ordering materials.

C. Product Technical Data

1. Product Data Sheets: Submit coating manufacturer's technical data on products and recommended use. Include the brand name and series number of all coatings to be used. Submit product data sheets for all coating systems that include the following information:

a. VOC data.

b. Storage requirements.

c. Primer type, where required.

d. Maximum dry and wet mil thickness per coat.

e. Minimum and maximum curing time between coats and final cure times, including atmospheric conditions for each.

f. Curing time before submergence in liquid.

g. Thinners/solvents for reduction and cleaning.

h. Ventilation requirements.

i. Minimum and maximum atmospheric and substrate application conditions.

j. Allowable application methods.

k. Maximum allowable moisture content (concrete substrates).

l. Maximum shelf life.

2. Material Safety Data Sheets (MSDS): Submit coating manufacturer's Material Safety Data Sheets (MSDS) for products to be used on the project, including solvents, additives, cleaners, and thinners.

3. Surface Preparation Criteria: Submit coating manufacturer's surface preparation criteria, including recommended surface profile range after abrasive blasting.

4. Application Instructions: Submit Coating manufacturer's application instructions and equipment recommendation.

D. Certifications

1. VOC Content: Submit coating manufacturer's certification indicating that the submitted coatings meet regulations for allowable VOC content in the place of application and use intended.

2. NSF 61 Certification: Submit NSF 61 certification or listing for products applied to surfaces in contact with process (potable or to be treated to potable) water.

3. Compatibility Confirmation: Submit written confirmation by the shop and field applied coating manufacturers indicating that the compatibility between the shop and field applied coatings have been checked and approved by those manufacturers.

E. Coating Plan/Program

1. Cleaning and Abrasive Blasting Equipment: Submit abrasive blast cleaning and application equipment list and complete procedures for its use.

2. Coating System Treatment and Termination: Submit detailed, written instructions and/or graphic details for coating system treatment and coating system terminations for items to be coated in the project.

3. Overspray and Fugitive Dust Prevention: Submit contractor's written program for over spray prevention.

4. Recoating Information and Schedule: Submit information that defines the end date for field coating application for all equipment, machinery, and piping to ensure that the maximum recoat time for the shop applied primers will not be exceeded when field applied coatings are installed.

F. References and Qualifications

1. Manufacturer Project References: Submit a minimum of five project references, including current contact name, address, and telephone number where proposed coating products have been successfully used in similar coating applications within the past 5 years.

2. Applicator Project References: Submit a minimum of five project references, including current contact name, address, and telephone number where the Coatings Applicator has successfully performed similar coating work within the past 5 years.

3. Applicator Quality Assurance: Submit a letter from the selected and approved coating manufacturers for the project that verifies that the applicator meets the qualifications and quality assurance requirements in this Section (09 96 00).

4. Inspector Qualifications: Submit Qualifications for Quality Control personnel to be provided on site by the Contractor including, but not limited to, the inspector's NACE and SSPC Certification numbers for the certifications as requested in this Section (09 96 00).

1.06 QUALITY ASSURANCE

A. Regulatory Requirements

1. All work, materials, procedures, and practices under this Section (09 96 00) shall conform to the requirements of the applicable Federal, State, County, and local regulations and ordinances. The Contractor shall be responsible for securing any and all licenses, certificates, and permits required for the work at no additional cost to the Owner.

2. Prime and finish coat painting done at the project site or in locations other than the project site shall be in accordance with the air quality regulations in effect at the place the coating is applied.

3. All debris (liquid or solid) generated from surface preparation or coating activities shall be tested and disposed offsite in accordance with applicable Federal, State, County, and local regulations and ordinances. The Contractor shall be responsible for all required testing, monitoring, reporting, licenses, permits, and fees at no additional cost to the Owner.

B. Unit Responsibility

1. Assign unit responsibility for the materials, surface preparation, and coatings application to the Coatings Application Subcontractor .

2. Provide a certificate of Unit Responsibility. See Section 01 99 90.

C. Materials

1. Contaminated, outdated, diluted materials, and/or materials from previously opened containers shall not be used.

2. Each coating system shall have only one product used for the finish coat to ensure consistency in appearance throughout the project.

3. Delivery of coating system materials shall be in original, unopened containers with seals unbroken and labels intact. Labels shall identify type of material, color, and batch number. No material shall exceed six months from the original batch manufacturing date (No exceptions).

4. For repairs, the Contractor shall provide the same products, or products recommended by the coating manufacturer, as used for the original coating.

D. Qualifications

1. Coatings Manufacturer Requirements

a. Minimum of ten (10) years of successful experience manufacturing protective coatings. Submit list of references to demonstrate successful performance on comparable projects.

2. Coatings Applicator Requirements

a. Minimum of five (5) years practical experience and successful history in the application of similar products on comparable projects. Submit list of references.

E. Pre-Painting Conference

1. Schedule pre-painting conference with the Owner.

2. Do not proceed without holding a pre-painting conference with the Owner, Contractor, Inspector, Coating Applicator and Manufacturer.

3. Topics for discussion include:

a. Site conditions

b. Coating materials and manufacturer's application recommendations.

c. Surface preparation prior to abrasive blast cleaning.

d. Specification compliance of blast abrasives and surface profile requirements.

e. Schedule of field surface preparation and coating application, and order of the work.

f. List of equipment and procedures for cleaning, blasting, coating application, ventilation and dehumidification (if required).

g. Safety programs and the enforcement to be used during the course of the work.

h. Weather limitations for acceptable work.

i. Inspection facilities and equipment to be provided.

j. Hold points and inspector’s authority.

k. Establish non-conformance procedures, and chain of command and who signs off on completion of bringing the job back into compliance.

l. Procedures for over-spray prevention.

F. Coatings Applicator Personnel

1. Provide a supervisor at the work site during cleaning, surface preparation, and coating operations.

2. Provide skilled personnel qualified to perform work to industry standards of practice and safety, maintain continuity of personnel, and coordinate any transfer of personnel with the Owner.

G. Quality Control Requirements

1. The Contractor is responsible for ensuring that the surface preparation and coating activities meet the requirements of this specification. Observations by the Engineer, or a representative of the coating manufacturer, will not relieve or limit the Contractor's responsibilities.

2. Coatings application shall conform to requirements of this specification and the referenced standards. Changes in the coating system installation requirements will be allowed only with the written authorization of the Engineer before work commences.

3. The Contractor shall conduct the work and maintain appropriate and measurable quality control activities to ensure that the coating systems are installed as specified. Coating system work that does not conform to the Specifications or is otherwise not acceptable shall be corrected in accordance with the coating manufacturer's written procedures.

   a. Measure all dry film thicknesses. Readings shall be conducted as defined in SSPC-PA2.

   b. The ~~City~~Owner may, but is not required to, also measure coating thickness, at random locations, after each coat. SSPC –PA 2 (Level 1) is only to be used for the calibration of dry film thickness gauges. This is a minimum maximum dry film thickness specification. Dry film thickness readings will not be averaged. All inspection equipment shall be supplied by the Contractor. All equipment shall have current calibration certificates. The ~~City~~Owner reserves the right to use their own equipment at any time.

4. The Contractor shall prepare and submit coating work daily reports for each day while on site. The coating work daily reports shall be submitted to the Engineer no later than 1:00 p.m. the following workday. The coating work daily reports shall include the following:

   a. Number of coating applicator employees on site.

   b. Start and finish time of work shift.

   c. Climatic conditions at 4-hour intervals (i.e., partly cloudy, air temperature 78°F, relative humidity 63%, dew point 68°F, and WNW wind @ 4 mph).

   d. Major equipment on site regardless of utilization (i.e., trailers, air compressors, generators, spray pumps, scaffolding, aerial lifts, pressure washers, and sandblast pots).

   e. Inventory of coatings, solvents and abrasive media stored on site including information relative to deliveries received each day.

   f. Summary of work performed to include:

      1) Substrates/structures prepared (size, quantity, and location).

2) Surface preparation methods including materials consumed and equipment utilized.

3) Substrates/structures coated (size, quantity, and location).

4) Mixing method and time mixed (coating materials).

5) Induction time, pot life, and application start time.

6) Coating application methods including equipment utilized.

7) Application finish time.

8) Coating materials consumed [sequencing, product name, batch number(s) and manufacture date].

9) Problems encountered (i.e., equipment malfunctions or disruption/interference by other trades).

10) Accidents or near misses.

11) Quality control testing results.

H. On-site Inspection

1. The Contractor shall identify the points of access for inspection. The Contractor shall provide ventilation, ingress and egress, and other means necessary for the Owners' personnel to safely access the work areas.

2. The specified quality control tasks shall be performed by a NACE-certified inspector hired and paid for by the Owner.

3. Acceptance criteria for each Quality Control test shall be as indicated on the manufacturer's published data or in this specification, whichever is more stringent.

1.07 WARNINGS

A. Application of paint, epoxy, and protective coating materials may be hazardous. Take all necessary precautions to ensure the safety of workers and property.

B. Part of this work requires abrasive blasting. This may require the use of special equipment. Become familiar with the existing site conditions and take all steps necessary to protect adjacent facilities and personnel, at no additional cost to the Owner. Abrasive blasting and painting is called for in, on, or around mechanical equipment, which may be damaged by grit, dust, or painting overspray. Mask, wrap, enclose, and provide all protection required to safeguard this equipment at no additional cost to the Owner.

C. Perform abrasive blasting activities in a manner that will not cause nuisance.

1.08 EXTRA MATERIALS

A. Supply 1 gallon of each color, type, and surface texture. Store where directed.

B. Label each container with color, type, texture, and room locations, in addition to manufacturer's label.

1.09 WARRANTY

A. Provide material and workmanship warranty for coatings of 18 months from date of final acceptance by the Owner

B. Complete the Extended Warranty Form in Section 01 99 9.

C. See also Paragraph 3.10.

PART 2 - PRODUCTS

2.01 MANUFACTURERS

A. Products identified for each coating system are the product names from specific manufacturers. Coatings products from other manufacturers and of equal or higher quality and performance may also be acceptable.

1. Requests for Substitution of Alternative Coatings Products:

a. Include the full name of each product, descriptive literature, test data, data on past performance, manufacturer's instruction for use, generic type, and its nonvolatile content by volume.

b. Demonstrate product and performance is equivalent to the specified materials and complete systems.

c. Demonstrate that the coatings manufacturer has local qualified representation which will provide onsite technical support to resolve field problems with the manufacturer's products, materials or application for the duration of the project.

B. Requests for substitution of alternative coating products that decreases the specified dry-film thickness or the number of coats to be applied, or which changes the generic type of coating specified, will not be considered.

2.02 ABRASIVES FOR BLAST CLEANING

A. Use only new materials that are clean and free of contaminants.

B. Materials must be certified by the California Air Resources Board (CARB) for use in dry, open air abrasive blasting.

C. The Contractor shall use abrasive grit for field blast cleaning conforming to the following:

1. Produce a sharp angular surface profile of 1.5 to 2.5 mils

2. New, clean and free of contaminants (SSPC AB 1), and containing no hazardous materials.

D. Comply with all applicable requirements of Cal/OSHA and the Bay Area Air Quality Management District. Abrasives shall be certified by California Air Resources Board, Executive Order G-565.

E. Purchase only from firms which can accept spent abrasives, then process spent abrasives for recycle or proper disposal.

2.03 COATING SYSTEMS

A. System No. 1 – Zinc-Epoxy-Polyurethane System

1. Surface: Metal.

2. Service: Interior; exterior; exposed to direct sunlight; not immersed.

3. Surface Preparation

   a. Shop-Primed Metal

      1) Clean shop-primed surfaces in accordance with SSPC SP-2 (Hand Tool Cleaning).

      2) Clean damaged shop-coated areas in accordance with SSPC SP-3 (Power Tool Cleaning) and recoat with specified primer.

      3) For factory-coated or shop-primed pumps, tanks, and other equipment, delete zinc-rich primer and use compatible primer as recommended by the coating manufacturer. All repair areas shall be abraded and de-glossed and feathered into a smooth transition.

   b. Bare Metal

      1) Prepare surface in accordance with SSPC SP-6 (Commercial Blast Cleaning) to 1.5 to 2.5 mil (Thin film systems)surface profile.

      2) For ductile iron pipe, prepare surfaces in accordance with NAPF 500-03, NAPF 500-03-04, and NAPF 50.

      3) Clean ferrous metal with bleeding in accordance with SSPC SP-11 (Power Tool Cleaning to Bare Metal).

      4) Spot blast areas of rust penetration to SSPC SP-10 (Near White Blast) and spot prime with specified primer.

   c. Galvanized Metal

      1) Clean damaged galvanized steel areas with exposed ferrous metal and/or rust in accordance with SSPC SP-5 (White Metal Blast Cleaning) or SSPC SP-11 (Power Tool Cleaned to Bare Metal) to achieve uniform 1.0 to 1.5 mil profile; spot prime with specified primer.

      2) Prepare galvanized, non-ferrous metal in accordance with SSPC SP-16 to impart uniform 1.0 to 1.5 mil profile.

      3) For galvanized steel, delete zinc primer.

4. Primer

   a. Field apply one coat of zinc-rich epoxy primer, or polyurethane primer where zinc-rich primer is to be omitted, compatible with urethane finish; comply with written instructions of coating manufacturer.

   b. Thickness: 3.0 to 4.0 dry mils.

   c. Products: Sherwin Williams, Zinc Clad 4100; Carboline, 859; or equal.

5. Intermediate

   a. Field apply one coat of intermediate or primer epoxy.

   b. Thickness: 5.0 to 6.0 dry mils.

   c. Product: Sherwin Williams, Macropoxy 646 FC; Carboline, Carboguard 890; or equal.

6. Finish

   a. Field apply one coat of polyurethane finish.

b. Thickness: 2.0 to 3.0 dry mils.

c. Product: Sherwin Williams, Hi Solids Polyurethane 250; Carbothane 134VOC; or equal.

B. System No. 2 – NSF Epoxy

1. Surface: Metal.

2. Service: Interior of tanks and other metal components in contact with water.

3. Surface Preparation

a. Shop-Primed Metal

1) Clean shop-primed surfaces in accordance with SSPC SP-2 (Hand Tool Cleaning) or SSPC SP-3 (Power Tool Cleaning).

2) Clean damaged shop-coated areas in accordance with SSPC SP-5 (White Metal Blast Cleaning) and spot prime with specified primer. Cleaning shall produce a surface profile of 2.0 to 2.5 mils.

3) Shop epoxy primed surfaced shall require abrasive blasting or abrading per SSPC-SP 7 prior to receiving finish coats if the maximum recoat limit has been exceeded for the primer. This cleaning shall produce a uniform surface profile of 1.0 to 1.5 mils in the intact primer.

b. Bare Ferrous Metal

1) Prepare surface in accordance with SSPC SP-5 (White Metal Blast Cleaning) to 2.0 to 2.5 mil surface profile.

c. Nonferrous and Galvanized Metal

1) Prepare in accordance with SSPC SP-16 to achieve a uniform 1.0 to 1.5 mil profile.

4. System Thickness: Minimum 10 mils dry film.

5. Primer

a. Field apply one coat of the epoxy primer at the manufacturer's recommended dry film thickness.

b. Products: Sherwin Williams, Macropoxy 646; Carboline, Carboguard 691; or equal.

6. Finish

a. Field apply one or more coats of the epoxy finish at the manufacturer's recommended dry film thickness per coat to the specified system thickness.

b. Product: Sherwin Williams, Macropoxy 646; Carboline, Carboguard 691; or equal.

C. System No. 3 – Polyamidoamine Epoxy

1. Surface: Metal.

2. Service: Below grade (buried, exterior) in contact with soil.

3. Surface Preparation

a. Shop-Primed Metal

1) Clean shop-primed surfaces in accordance with SSPC SP-2 (Hand Tool Cleaning) or SSPC SP-3 (Power Tool Cleaning).

2) Clean damaged shop-coated areas in accordance with SSPC SP-10 (Near White Metal Blast Cleaning) and spot prime with specified primer. Cleaning shall produce a surface profile of 2.0 to 2.5 mils.

3) Shop epoxy primed surfaced shall require abrasive blasting or abrading per SSPC-SP 7 prior to receiving finish coats if the maximum recoat limit has been exceeded for the primer. This cleaning shall produce a uniform surface profile of 1.0 to 1.5 mils in the intact primer.

b. Bare Ferrous Metal

1) Prepare surface in accordance with SSPC SP-10 (Near White Metal Blast Cleaning) to 2.0 to 2.5 mil surface profile.

4. System Thickness: Minimum 16 mils dry film.

5. Finish

a. Field apply two or more coats at the coating manufacturer's recommended dry film thickness per coat to the specified system thickness.

b. Product: Sherwin Williams, Macropoxy 646; Carboguard 890; or equal.

D. System No. 4 – Acrylic (Latex)

1. Surface: PVC and CPVC pipe.

2. Service: Exterior; direct sunlight exposure.

3. Surface Preparation

a. Clean plastic pipe with a solvent compatible with the specified primer.

b. Sand plastic pipe to uniformly abrade and de-gloss surfaces to achieve a surface profile of 1.0 to 1.5 mils. Vacuum clean after sanding to remove loose dust, plastic particles, and dirt.

4. System Thickness: Minimum 3 mils dry film.

5. Primer

a. Field apply one coat of acrylic primer.

b. Thickness: To the coating manufacturer's recommended dry film thickness.

c. Product: Sherwin Williams, Extreme Bond; Carboline, Sanitile 120; or equal.

6. Finish

a. Field apply one or more coats at the coating manufacturers recommended dry film thickness per coat to provide the specified system thickness.

b. Thickness: To system thickness.

c. Product: Sherwin Williams, Sher-Cryl HPA; Carboline, Carbocrylic 3359 DTM.

E. System No. 5 – Polyurethane

1. Surface: Concrete

2. Service: Interior, immersed

3. Surface Preparation:

a. Complete and cure concrete construction for 30 days or more before starting surface preparation work.

b. Prepare surfaces in accordance with SSPC-SP 13/NACE 6 or ICRI 03732 to obtain CSP 4 to 6 roughness

c. Eliminate leaks and infiltrations and remove standing water

d. Resurface areas with excessive cavities or exposed aggregate

e. Surface must be free of dust, condensation and visible moisture before application

4. System Thickness: 60 mils dry film

5. Primer

a. Field apply one coat of epoxy primer.

b. Thickness: To the coating manufacturer's recommended dry film thickness.

c. Product: Sherwin Williams, Macropoxy 5500LT or Corobond 100 Primer; Carboline Carboseal 720

6. Finish

a. Field apply one or more coats at the coating manufacturers recommended dry film thickness per coat to provide the specified system thickness.

b. Thickness: To system thickness.

c. Product: Sherwin Williams Poly-Cote 115; Carboline Reactamine 760

2.04 FINISH SCHEDULE

A. The following Finish Schedule identifies major structures, equipment, and substrates to be coated in accordance with this Section (09 96 00). The Finish Schedule is not intended to be a complete listing of all surfaces to be coated and other requirements may be identified elsewhere in the Specifications or on the Drawings. There may be additional surfaces for the project that require coating application which may not be listed in the Finish Schedule, and the Contractor shall be responsible for coating those surfaces in accordance with the requirements of this Section(09 96 00).

Structure	Substrate	Coating System	Color
Exposed Ferrous Metal Piping, Equipment, and Structures	Ferrous Metal	No. 1	Determined by Owner
Potable Water Piping, Exposed	Ferrous Metal	No. 2	Determined by Owner
Submerged DIP	Ferrous Metal	No. 3	Determined by Manufacturer
Exposed PVC Piping	Thermoplastic	No. 4	Determined by Owner

B. The Contractor shall be responsible to identify any surfaces for which there is a question about what standard coating system to apply. about what standard coating system to apply as part of the work covered by this Section (09 96 00) through a Request for Information.

PART 3 - EXECUTION

3.01 PRODUCT SHIPMENT, PROTECTION, AND STORAGE

A. Comply with Section 01 66 00.

B. Delivery

1. Deliver in original sealed containers identified with labels indicating manufacturer; product name and number; color, batch or lot number, and date of manufacture.

2. Note the date of manufacture and apply coatings prior to the expiration of the guaranteed storage life.

3. Coating materials exceeding storage life will be rejected.

C. Storage

1. Store coating materials in enclosed structures to protect from weather and excessive heat or cold.

2. Coatings stored at above or below manufacturers recommendations will be rejected.

3. Comply with state and local requirements for flammable materials.

3.02 SCAFFOLDING

A. Furnish, maintain, and remove scaffolding, ladders, planks required for application of coatings. Scaffolding, ladders, and rigging shall be designed for their intended use and shall comply with OSHA requirements.

B. Where requested by the Owner, provide ladders or scaffolding to facilitate inspection of the specified work.

3.03 HEALTH AND SAFETY REQUIREMENTS

A. General

1. Comply with the applicable health and safety requirements of OSHA and the recommendations of the product manufacturer.

2. Provide and require the use of proper personal protective and life-saving equipment for all persons visiting or working in or about the project site.

B. Ventilation: Ventilate work areas to control potential exposure and hazard to workers and employees of the plant.

1. Furnish and install temporary ventilation system to remove contaminated air, vapors, and other potential hazardous substances from confined spaces and interiors of containment structures. Forced air ventilation is required during blast cleaning, abrasive removal, coating application, and curing in confined spaces.

2. Ventilation system equipment shall be explosion proof, of industrial design, and of adequate capa~~city~~Owner to reduce the concentration of air contaminants to the degree that a hazard to workers or employees of the plant does not exist. Size ventilation system to maintain air changes within the confined space per OSHA regulations.

C. Illumination

1. Provide spark proof artificial lighting for all work in confined spaces.

2. Equip light bulbs with a protective cage to prevent breakage.

3. For lighting fixtures and bulbs, comply with the requirements of Section 70 of the National Fire Protection Association (NFPA), "National Electric Code", for the applicable atmosphere.

4. For lighting and other electrical systems, provide ground fault type, complying with NFPA 70.

5. Provide the following minimum illumination during all phases of work:

a. General work area: 25-Foot Candles.

b. Surface preparation and coating application: 30-Foot Candles.

c. Inspection: 50-Foot Candles per SSPC-Guide 12.

6. As directed by the Owner, provide additional illumination to fully illuminate all areas to be inspected.

D. Noise

1. Whenever the occupational noise exposure exceeds the maximum allowable sound level as set forth by OSHA regulations, the regional Air Pollution Control District and/or the ~~City~~Owner of Santa Cruz, provide and require the use of approved ear protection devices.

2. General maximum sound levels for the project are defined as those which will not affect routine facility or neighborhood activities.

3. Whenever levels are objectionable, or exceed these limits, adjust operations to reduce noise levels, as directed by the Owner or the local agency of jurisdiction.

E. Fire Extinguishers

1. Keep a minimum of two (2) ten pound (10-lb) ABC type fire extinguishers present in the work area whenever work is proceeding.

2. Train all personnel in the use of this type of fire extinguisher.

F. Comply with OSHA and applicable regulations and carefully follow the manufacturer's recommendations, precautions, and warnings regarding the handling and use of all surface preparation and coating materials and equipment.

G. Use coating equipment designed for application of the material specified and maintain in good working condition at all times.

3.04 ENVIRONMENTAL CONTROL

A. Carefully contain paints and solvents. Do not allow them to penetrate the soil.

B. Dispose of waste material in a legal manner. All stationary operating equipment shall be placed into secondary containment.

3.05 PREPARATION

A. General

1. Surface preparations for each type of surface shall be in accordance with the specific requirements of each Coating Systems Description. In the event of a conflict the Coating Systems Description shall take precedence.

2. Surfaces to be coated shall be clean and dry. Before applying coating or surface treatments, oil, grease, dirt, rust, loose mill scale, old weathered coatings, and other foreign substances shall be removed. Oil and grease shall be removed before mechanical cleaning is started. Where mechanical cleaning is accomplished by blast cleaning, the abrasive used shall be washed, graded and free of contaminants which might interfere with the adhesion of the coatings. The air used for blast cleaning shall be sufficiently free of oil and moisture to not cause detrimental contamination of the surfaces to be coated.

3. The Contractor shall verify at a minimum of two times daily that air supply is free of oil and moisture contamination (ASTM D-4285). The Contractor shall use effective oil and water separators in all main compressor airlines and shall be placed as close as practicable to the equipment. Prior to using compressed air, the Contractor shall test the quality of air downstream of the separators at suitable outlets by blowing the air on clean white blotter for 2 minutes to check for any contamination, oil, or moisture.

4. Cleaning and coating shall be scheduled so that dust and spray from the cleaning process shall not fall on wet, newly coated surfaces. Hardware, hardware accessories, nameplates, data tags, machined surfaces, sprinkler heads, electrical fixtures, and similar uncoated items which are in contact with coated surfaces shall be removed or masked prior to surface preparation and painting operations. The Coating Inspector will examine surfaces after abrasive blast cleaning to verify

that all deposits of contaminants have been removed as per surface clean as per ISO 8502 (Class 2). The Contractor shall blow down and vacuum all surfaces prior to ~~City~~Owner inspection. Tank floors shall be vacuumed. Following completion of coating, removed items shall be reinstalled. Equipment adjacent to walls shall be disconnected and moved to permit cleaning and painting of equipment and walls and, following painting, shall be replaced and reconnected.

5. Containment: The Contractor shall erect and maintain protective enclosures as required to ensure that surface preparation debris, including dust, is contained within the immediate work area. All costs associated with containment shall be paid by the Contractor.

6. Dust and Contaminants: Protect substrate from excessive dust and airborne contaminants during coating application and curing. Use temporary dust barriers to close off areas being painted from areas where other work is being performed.

B. Abrasive Blast Cleaning

1. When abrasive blast cleaning is required to achieve the specified surface preparation the following requirements for blast cleaning materials and equipment shall be met:

   a. Used or spent blast abrasive shall not be reused on this project.

   b. The compressed air used for blast cleaning shall be filtered and shall contain no condensed water and no oil. Moisture traps shall be cleaned at least once every four hours or more frequently as required to prevent moisture from entering the supply air to the abrasive blasting equipment.

   c. Oil separators shall be installed just downstream of compressor discharge valves and at the discharge of the blast pot discharges. These shall be checked on the same frequency as the moisture traps as defined in Item 2 above.

   d. Regulators, gauges, filters, and separators shall be in use on compressor air lines to blasting nozzles times during this work.

   e. An air dryer or desiccant filter drying unit shall be installed which dries the compressed air prior to blast pot connections.

   f. The air dryer shall be used and maintained for the duration of surface preparation work.

   g. The contractor shall provide ventilation for airborne particulate evacuation (meeting pertinent safety standards) to optimize visibility for both blast cleaning and inspection of the substrate during surface preparation work.

   h. If, between final surface preparation work and coating system application, contamination of prepared and cleaned metallic substrates occurs, or if the prepared substrates' appearance darkens or changes color, re-cleaning by water blasting, re-blasting and abrasive blast cleaning shall be required until the specified degree of cleanliness is reclaimed.

   i. The contractor is responsible for dust control and for protection of mechanical, electrical, and other equipment adjacent to coatings work.

C. Solvent Cleaning

1. Any solvent wash, solvent wipe, or cleaner used, including but not limited to those used for surface preparation in accordance with SSPC SP-1 Solvent Cleaning shall be of the emulsifying type which emits no more than 340 g/l VOCs for AIM regions, 250 g/l for CARB regions and 100 g/l for SCAQMD regions, contains no phosphates, is biodegradable, removes no zinc, and is compatible with the specified primer.

2. Clean white cloths and clean fluids shall be used in solvent cleaning.

D. Ferrous Metal Substrates

1. Ferrous surfaces shall be prepared in accordance with applicable surface preparation specifications of SSPC/NACE specified for each coating system. Specific surface preparation requirements are stated in the Coating Systems Description. The profile depth of the surface to be coated shall be in accordance with the Coating Systems Description requirements and shall be measured by Method C of ASTM D4417. Blast particle size shall be selected by the Contractor to produce the specified surface profile. The solvent in solvent cleaning operations shall be as recommended by the coating manufacturer.

2. Preparation of ferrous metal surfaces shall be based upon comparison with SSPC-VIS1, and as described in the Coating Systems Description for each coating system. If dry abrasive blast cleaning is selected and to facilitate inspection, the Contractor shall, on the first day of cleaning operations, abrasive blast metal panels to the standards specified. Plates shall measure a minimum of 8-1/2 inches by 11 inches. Panels meeting the requirements of the specifications shall be initialed by the contractor and the Owner and coated with a clear nonyellowing finish. One of these panels shall be prepared for each type of abrasive blasting and shall be used as the comparison standard throughout the project.

3. Blast cleaning requirements for steel, and ductile-iron, are as follows:

   a. Ferrous steel piping shall be prepared in accordance with SSPC SP-6 and primed before installation.

   b. Ductile-iron piping surfaces including fittings shall be prepared in accordance with NAPF 500-03, NAPF 500-03-04, and NAPF 50.

   c. Remove traces of grit, dust, dirt, rust scale, friable material, loose corrosion products or embedded abrasive from substrate by vacuum cleaning prior to coating application per ISO 8502 (Class 2).

   d. Care must be taken to prevent contamination of the surface after blasting from worker's fingerprints, deleterious substances on workers' clothing, or from atmospheric conditions.

E. Thermoplastic

1. Prepare surfaces of PVC by sanding to establish uniform surface roughness and to remove gloss from the substrate. Vacuum clean surfaces to remove loose dust, dirt, and other materials. Next, solvent clean using clean white rags and allow solvent to completely evaporate before application of coating materials.

3.06 APPLICATION

A. Workmanship

1. Coated surfaces shall be free from excessive runs, sags, drips, ridges, waves, laps, and brush marks. Coats shall be applied to produce an even film of uniform thickness completely coating corners and crevices. Minor and infrequent runs and sags which are within the total specified DFT plus a few mils – no more than 10% more mils than the specified total DFT shall be acceptable. Frequent runs or sags which exceed these limits or are detrimental to coating system performance are not acceptable.

2. The Contractor's spray equipment shall be designed for application of the materials specified. Compressors shall have suitable traps and filters to remove water and oils from the air. Spray equipment shall be equipped with mechanical agitators, pressure gages, and pressure regulators, and properly sized spray tips.

3. Each coating application be applied evenly and sharply cut to line. Care shall be exercised to avoid overspray or spattering paint on surfaces not to be coated. Glass, hardware, floors, roofs, and other adjacent areas and installations shall be protected by taping, drop cloths, or other suitable measures.

4. Coating applications method shall be as recommended by the coating manufacturer.

5. Allow each coat to cure or dry thoroughly, according to the coating manufacturer’s printed instructions, prior to recoating.

6. Vary color for each successive coat for coating systems when possible. When coating complex steel shapes, prior to overall coating system application, stripe coat welds, edges of structural steel shapes, metal cutouts, pits in steel surfaces, or rough surfaces with the prime coat. This involves applying a separate coat using brushes or rollers to ensure proper coverage. Stripe coat via spray application is not permitted.

B. Coating Properties – Mixing and Thinning

1. Coatings, when applied, shall provide a satisfactory film and smooth even surface. Glossy undercoats shall be lightly sanded to provide a surface suitable for the proper application and adhesion of subsequent coats. Coating materials shall be thoroughly stirred, strained, and kept at a uniform consistency during application. Coatings consisting of two or more components shall be mixed in accordance with the coating manufacturer’s instructions. Where necessary to suit the conditions of the surface, temperature, weather and method of application, the coating may be thinned as recommended by the coating manufacturer immediately prior to use. The VOC of the coating as applied shall comply with prevailing air pollution control regulations. Unless otherwise specified, coatings shall not be reduced more than necessary to obtain the proper application characteristics. Thinner shall be as recommended by the coating manufacturer.

2. Mixing of partial “kits” is strictly prohibited unless authorized in writing by the coating manufacturer and the Owner. This prohibition also applies to coatings

mixed for touchup or repairs. If authorized to mix partial kits, the contractor shall utilize containers with appropriate graduated markings/calibrated weight scales.

C. Environmental Conditions

1. Provide adequate heat, ventilation, and dehumidification to ensure that the coating manufacturer's environmental requirements are met and to ensure no loss of production days due to failure to meet coating manufacturer's environmental requirements.

2. Provide sufficient and continuous ventilation and air movement across coated substrates to remove volatile constituents (solvent) throughout the manufacturer's published curing period.

3. Air and surface temperatures: Prepare surfaces, apply and cure coatings within air and surface temperature range recommended by coating manufacturer.

4. Relative humidity: Prepare surfaces, apply and cure coatings within relative humidity range in accordance with coating manufacturer's instructions.

5. Dew Point: Do not apply coatings unless the temperature of the dew point is 5°F or greater than the temperature of the substrate.

6. Precipitation: Do not apply coatings in rain, snow, fog, or mist.

7. Wind: Do not spray apply coatings when the wind direction and velocity are such that overspray may result in property damage.

D. Protection of Coated Surfaces

1. Items which have been coated shall not be handled, worked on, or otherwise disturbed, until the coating is completely dry and hard. After delivery at the site, and upon permanent erection or installation, shop-coated metalwork shall be recoated or retouched with specified coating when it is necessary to maintain the integrity of the film.

E. Film Thickness and Continuity

1. WFT of the first coat of the coating system and subsequent coats shall be verified by the contractor, during application of each coat.

2. Coatings shall be applied to the minimum dry film thickness specified as indicated on the CDS. Dry film thickness shall be determined using the appropriate industry standard for the substrate (SSPC-PA 2, SSPC-PA 9, or ASTM D1400). Coatings determined to be above the maximum dry film thickness, as indicated herein or on the coating manufacturer's product data sheet, will be removed at the Owner's discretion.

3. The Inspector may, but is not required to, also measure coating thickness, at random locations, after each coat. SSPC –PA 2 (Level 1) is only to be used for the calibration of dry film thickness gauges. This is a minimum maximum dry film thickness specification. Dry film thickness readings will not be averaged. All inspection equipment shall be supplied by the Contractor. All equipment shall have current calibration certificates. The Owner reserves the right to use their own equipment at any time.

4. In testing for continuity of coating about welds, projections (such as bolts and nuts), and crevices, the Owner shall determine the minimum conductivity for smooth areas of like coating where the dry mil thickness has been accepted. This conductivity shall be the minimum required for these rough or irregular areas. Pinholes and holidays shall be recoated to the required coverage.

5. The ability to obtain specified film thickness is generally compromised when brush or roller application methods are used and, therefore, more coats may be needed to be applied to achieve the specified dry film thickness.

6. For concrete substrates, the Contractor shall apply a complete skim coat of the specified filler-surfacer material over the entire substrate prior to application of the coating system. This material shall be applied such that all open air voids and "bug holes" in the concrete substrate are completely filled prior to coating application.

F. Special Requirements

1. Before erection, the Contractor shall apply all but the final finish coat to interior surfaces of roof plates, roof rafters and supports, pipe hangers, piping in contact with hangers, and contact surfaces which are inaccessible after assembly. The final coat shall be applied after erection. Structural friction connections and high tensile bolts and nuts shall be coated after erection. Areas damaged during erection shall be hand-cleaned or power-tool cleaned and recoated with primer coat prior to the application of subsequent coats. Touch-up of surfaces shall be performed after installation. Surfaces to be coated shall be clean and dry at the time of application. Except for those to be filled with grout, the underside of equipment bases and supports that have not been galvanized shall be coated with at least two coats of intermediate coat specified for System 1 prior to setting the equipment in place. Provide coating system terminations at leading edges and transitions to other substrates in accordance with the coating manufacturer's recommendations or detail drawings.

G. Soluble Salt Contamination of Metal Substrates

1. Contractor shall test in accordance with SSPC Guide 15 metal substrates to be coated that have been exposed to sea water or coastal air or to industrial fallout of particulate or other sources of soluble chlorides (such as waste water exposure). If testing indicates chloride levels in excess of 25 ppm exist after the surface preparation has been completed. The Contractor shall reclean and prepare these surfaces until chloride levels are below 25 ppm.

3.07 EXCLUSIONS

A. Do not prepare or coat the following items or surfaces:

1. Mortar coated pipe and fittings

2. Sacrificial anodes and support wires

3. Copper, brass

4. Name Plates

5. Fiberglass items

B. Where surfaces specified as "not to be coated" are damaged, coated or otherwise do not comply with these Specifications, clean, repair or otherwise restore such surfaces to the satisfaction of the Owner, at no additional cost to the Owner.

3.08 INSPECTION AND TESTING

A. Perform inspection and testing as specified. Include additional inspection, sampling and testing work that the Owner may require to verify compliance with these Specifications.

B. Notify the Owner three (3) working days in advance of any field operations involving abrasive blast cleaning or coating applications.

C. Assistance to Owner

1. Coordinate work with the inspection, sampling and testing requirements of the Owner

2. Assist the Owner as required for the performance of duties.

3. Provide all lighting and scaffolding to enable the Owner to perform inspection and testing.

4. Provide the level of illumination and scaffolding locations for inspection purposes as directed by the Owner.

5. Furnish Owner with safety equipment and devices during abrasive blast cleaning, coating and painting operations. Provide a helmet with continuous fresh air supply for observation during cleaning operations and coating application.

D. The Owner will perform such tests as are required to help ensure compliance with all phases of the surface preparation, and application of the coating systems. Provide test equipment including, but not be limited to the following: SSPC surface preparation standards; surface profile test tape; micrometer; abrasive sieve test; ultraviolet lamp; sling psychrometer; mirror; certified thickness calibration plates; magnetic type dry film thickness gage; and a nondestructive holiday detector.

E. Inspection by the Owner does not relieve the Contractor of the responsibility of compliance with all the requirements of these specifications.

1. In cases of dispute concerning surface profiles, film thickness, film continuity (holidays), etc., the Owner’s measurements and tests shall be final. Abide by the Owner’s decisions and directives.

2. Correct deficiencies in the continuity of the coating, or painting film or in the dry film thickness by applying additional coats as required, at the sole expense of the Contractor.

F. The Owner will determine the degree and surface profile of the field blast cleaned surface per test method NACE RP0287. Perform additional blast cleaning over areas not conforming to the specified degree of surface preparation and surface profile.

G. Perform tests on surfaces of abrasively blast-cleaned steel to detect oil and other contaminants which might be deposited on surfaces as a result of abrasive blasting operations. This may include chemical tests or ultraviolet (black light) tests, as required.

H. Perform all mixing, thinning, application and holiday detection of coatings in the presence of the Owner.

I. The Owner may completely inspect each application of coating to determine thickness and integrity.

1. Each coating application will be checked and deficiencies marked.

2. After observing specified recoat time apply additional coating materials over areas not having the specified minimum dry film thickness and areas having any holidays or pinholes.

3. After correction of deficiencies, the Owner will re inspect those areas to determine the acceptability of the additional coating.

4. Each coating application must be one hundred (100) percent to the satisfaction of the Owner prior to proceeding with successive coating applications.

J. Dry Film Thickness Measurement

1. Use an approved magnetic type non destructive dry film thickness gauge.

2. Determine that the specified dry film thickness has been obtained.

3. Measure specified dry film thickness' above the peaks of the surface profile.

4. Perform as many dry film thickness measurements, as described in SSPC–PA2, as required to verify compliance with this specification. Use a Type II Constant Pressure Probe Dry Film Thickness Gauge.

K. Furnish calibrated inspection devices in good working condition for detection of holidays and measurement of dry film thickness.

1. Calibrate and operated per manufacturer's instructions.

2. Furnish U.S. Department of Commerce; National Bureau of Standards certified thickness calibrated plates to test the accuracy of dry film thickness gauges and certified instrumentation to test the accuracy of holiday detectors.

3. Keep dry film thickness gauges and holiday detectors available onsite at all times until final acceptance of the application.

L. Owner may elect to furnish inspection devices and render decisions based solely upon test results from these devices.

M. For coating film continuity detection tests on interior structure coated surfaces with 20 mils or less dry film thickness, use a nondestructive holiday detector.

1. Provide personnel to operate coating film continuity detection devices under the direction of the Owner.

2. Operate inspection devices per the manufacture’s recommendations in accordance with NACE SPO188.

3. Holiday test any tank lining or coatings that are to be used in immersion. The Contractor shall test all coated surfaces for pinholes (NACE SPO-188) and holidays after application of the final coat in accordance with the following:

a. Perform test in presence of the Owner’s Coating Inspector.

b. Perform test after coating has cured as recommended by the manufacturer.

c. Use an appropriate detector, such as Elcometer #236 or as approved by the Owner representative.

N. Test the coating integrity of the interior surfaces below the overflow line.

1. Mark all pinholes and repair manufacturer's written recommendations, or as directed by the Owner; and then retest.

2. Holidays or other irregularities are not permitted in the completed coating system.

3. During the testing, keep the detecting blade in continuous contact with the coated surface.

4. Do not proceed with holiday detection until the completed coating system has been cured per the manufacturer's recommendations.

O. Upon completion of the epoxy application to the interior structure surfaces, retest for holidays those areas of the lower shell which may have been subjected to abrasive blast rebound from the floor, repaired as noted herein. Repair areas as required and retest.

P. Measure anchor profile for prepared surfaces using a non destructive instrument such as a Testex Press O Film System.

Q. The Owner will verify completion of the final cure of the interior lining using a solvent wipe test.

1. Solvent wipe test: Consists of rubbing a solvent saturated rag on the area to be tested per ASTM D5402, using solvent recommended by manufacturer.

2. If any coating material is removed or the surface being tested becomes tacky, the coating is not fully cured. Extend curing time and if required continue dehumidification until the coating is fully cured.

R. The Owner may suspend the work if the cleaning and coating operations of the Contractor are creating a localized condition detrimental to facility operation, personnel or adjacent property. In the event of an intermittent or emergency suspension of the work by the Owner, correct deficiencies immediately.

S. Prepare, sign, and submit to the Owner daily inspection reports.

T. Nonconformance Reports

1. When a nonconformance report is required, prepare, sign, and submit to the Owner within one working day from the time that it is written.

2. After confirming that all non-conforming work has been corrected and/or the coating work is in compliance with this specification, prepare and submit a conformance verification report shall be completed for the specific item or area.

3. This report must be signed by the Inspector.

3.09 FINAL CLEANUP

A. Leave all areas in a neat and presentable condition.

B. Remove rubbish, construction debris and waste, surplus construction materials, scaffolding, tools, equipment, and coating, and thinner containers, and excess coating, and thinners, and other objectionable materials.

C. Dispose of such materials away from the site of work and in conformance with all applicable codes, ordinances and regulations.

D. Remove coating spots upon adjacent surfaces.

E. Clean, repair or refinish all damage to surfaces resulting from the work.

3.10 WARRANTY INSPECTION

A. Conduct a warranty inspection of all coating and painting work between the period of eleventh (11th) month through eighteenth (18th) month following final acceptance of the Contract work.

B. The Owner will establish the date for the inspection and will notify the Contractor at least 30 days in advance. The Owner may, by written notice to the Contractor, reschedule the warranty inspection to another date within the eleventh through eighteenth month inspection period, or may cancel the warranty period altogether.

C. Attendance

1. Attend the warranty inspection.

2. Notifying directly involved parties of the date and time of the inspection.

3. The Owner suggests personnel present at the pre-construction conference be present at this inspection.

D. Preparation

1. The Owner will completely drain and hose clean sufficiently for inspection.

2. Provide (Contractor) suitable lighting, ventilation and scaffolding for the structure inspection.

3. Use SSPC – Guide 12 for Illumination, and provide a minimum of 200 candle foot illumination for inspection.

E. Inspect visually the entire interior and exterior coating systems to determine whether any repair work is necessary or if a more detailed inspection will be needed.

F. Inspection Report

1. The Owner will prepare and deliver to the Contractor an Inspection Report.

a. The report will cover the warranty inspection, setting forth the number and types of failures observed, the percentage of the surface area where failure has occurred, and the names of the persons making the inspections.

b. Color photographs illustrating each type of failure will be included in the report.

c. A coating system failure is defined as any location where coatings have peeled off, bubbled, or cracked, and any location where rusting is evident.

d. Upon completion of inspection and receipt of Inspection Report, the Owner will establish a date for the Contractor to proceed with remedial work.

G. Commence repairs on the date established by the Owner and completed within one month (thirty days).

1. Repair all coating system failures.

a. Remove the deteriorated coating, clean the surface and recoat with the same coating system in strict accordance with the specification and manufacturer's recommendations, to the satisfaction of the Owner.

b. If the area of failure exceeds twenty five (25) percent of the area of a portion of the structures surface, then remove the entire coating system and recoat that surface. All costs for warranty inspection are the responsibility of the Contractor. Additional inspection and all costs for repair are the responsibility of the Contractor.

H. If the Contractor fails to complete the remedial work to the satisfaction of the Owner, the Owner may elect to perform the remedial work. The Contractor is liable for actual cost of all such remedial work, plus 20% for Owner’s administrative cost.

I. Perform final cleanup in accordance with this Section.

END OF SECTION

SECTION 10 14 00

SIGNAGE

PART 1 - GENERAL

1.01 SECTION INCLUDES

A. Room and door signs.

B. Interior directional and informational signs.

C. Building identification signs.

1.02 RELATED REQUIREMENTS

A. Section 26 51 00 - Interior Lighting: Exit signs required by code.

1.03 REFERENCE STANDARDS

A. 36 CFR 1191 - Americans with Disabilities Act (ADA) Accessibility Guidelines for Buildings and Facilities; Architectural Barriers Act (ABA) Accessibility Guidelines current edition.

B. ADA Standards - Americans with Disabilities Act (ADA) Standards for Accessible Design 2010.

C. ICC A117.1 - Accessible and Usable Buildings and Facilities 2017.

1.04 SUBMITTALS

A. See Section 01 33 00 - Submittals, for submittal procedures.

B. Product Data: Manufacturer's printed product literature for each type of sign, indicating sign styles, font, foreground and background colors, locations, overall dimensions of each sign.

C. Signage Schedule: Provide information sufficient to completely define each sign for fabrication, including room number, room name, other text to be applied, sign and letter sizes, fonts, and colors.

1. When room numbers to appear on signs differ from those on drawings, include the drawing room number on schedule.

2. When content of signs is indicated to be determined later, request such information from Owner through Architect at least 2 months prior to start of fabrication; upon request, submit preliminary schedule.

3. Submit for approval by Owner through Architect prior to fabrication.

D. Samples: Submit two samples of each type of sign, of size similar to that required for project, illustrating sign style, font, and method of attachment.

E. Selection Samples: Where colors are not specified, submit two sets of color selection charts or chips.

F. Manufacturer's Installation Instructions: Include installation templates and attachment devices.

G. Manufacturer's Qualification Statement.

1.05 QUALITY ASSURANCE

A. Manufacturer Qualifications: Company specializing in manufacturing the products specified in this section with minimum five years of documented experience.

1.06 DELIVERY, STORAGE, AND HANDLING

A. Package signs as required to prevent damage before installation.

B. Package room and door signs in sequential order of installation, labeled by floor or building.

C. Store tape adhesive at normal room temperature.

1.07 FIELD CONDITIONS

A. Do not install tape adhesive when ambient temperature is lower than recommended by manufacturer.

B. Maintain this minimum temperature during and after installation of signs.

PART 2 - PRODUCTS

2.01 MANUFACTURERS

A. Flat Signs with cut-out letters: - See Drawings for Design Basis

B. Provide sheet metal of sufficient thickness to remain flat without oil-canning.

1. Metal to be powder-coated after cutting.

a. Color to be chosen by Architect from standard Kynar colors.

2. Provide colored acrylic behind cut-out letters - see drawings.

a. Color to be chosen by Architect from standard available colors.

C. Provide colored acrylic behind cut-out letters - see drawings.

1. Color to be chosen by Architect from standard available colors.

D. Sign to be mounted with 1" spacers from face of metal siding.

1. Best Sign Systems, Inc: www.bestsigns.com/#sle

2. FASTSIGNS: www.fastsigns.com/#sle

3. Inpro: www.inprocorp.com/#sle

4. Mohawk Sign Systems, Inc: www.mohawksign.com/#sle

5. Seton Identification Products: www.seton.com/aec/#sle

6. Or equal..

7. Substitutions: See General Conditions 7.06, Substitutes.

E. Dimensional Letter Signs:

1. A.R.K. Ramos Architectural Signage Systems; Cast Aluminum Letters: www.arkramos.com/#sle

2. Cosco Industries; Cast Aluminum: www.coscoarchitecturalsigns.com/#sle

3. FASTSIGNS: www.fastsigns.com/#sle

4. Inpro: www.inprocorp.com/#sle

5. Or equal..

6. Substitutions: See General Conditions 7.06, Substitutes.

2.02 SIGNAGE APPLICATIONS

A. Accessibility Compliance: Signs are required to comply with ADA Standards and ICC A117.1, unless otherwise indicated; in the event of conflicting requirements, comply with the most comprehensive and specific requirements.

B. Room and Door Signs: Provide a sign for every doorway, whether it has a door or not, not including corridors, lobbies, and similar open areas.

1. Sign Type: Flat signs with engraved panel media as specified.

2. Provide "tactile" signage, with letters raised minimum 1/32 inch (0.8 mm) and Grade II braille.

3. See Drawings for Room and Door Sign templates including sizes and fonts.

4. Character Height: 1 inch (25 mm).

5. Sign Height: 2 inches (50 mm), unless otherwise indicated.

6. Office Doors: Identify with room names and numbers to be determined later, not those indicated on drawings.

7. Conference and Meeting Rooms: Identify with room names and numbers to be determined later, not those indicated on drawings.

8. Service Rooms: Identify with room names and numbers to be determined later, not those indicated on drawings.

9. Rest Rooms: Identify with pictograms, room numbers to be determined later, and braille.

C. Building Identification Signs:

1. Use individual metal letters.

2. Mount on outside wall in location indicated on drawings. See drawings for template Building Identification Sign including font and size.

3. Allow for 2 Building Identification Signs per Building

D. Other Dimensional Letter Signs: Wall-mounted.

1. Exterior: Allow for total of 50 letters, 6 inches (150 mm) high, metal.

2.03 SIGN TYPES

A. Flat Signs: Signage media without frame.

1. Edges: Square.

2. Corners: Square.

3. Wall Mounting of One-Sided Signs: Tape adhesive.

B. Color and Font: Unless otherwise indicated:

1. Character Font: Helvetica, Arial, or other sans serif font.

2. Character Case: Upper case only.

3. Background Color: Clear.

4. Character Color: Contrasting color.

2.04 TACTILE SIGNAGE MEDIA

A. Engraved Panels: Laminated colored plastic; engraved through face to expose core as background color:

1. Total Thickness: 1/16 inch (1.6 mm).

2.05 DIMENSIONAL LETTERS

A. Metal Letters:

1. Metal: Aluminum casting.

2. Metal Thickness: Manufacturer's standard for letter size.

3. Letter Height: As indicated n Drawings.

4. Mounting: Concealed screws.

2.06 ACCESSORIES

A. Concealed Screws: Stainless steel, galvanized steel, chrome plated, or other non-corroding metal.

B. Exposed Screws: Chrome plated.

C. Tape Adhesive: Double sided tape, permanent adhesive.

PART 3 - EXECUTION

3.01 EXAMINATION

A. Verify that substrate surfaces are ready to receive work.

3.02 INSTALLATION

A. Install in accordance with manufacturer's instructions.

B. Install neatly, with horizontal edges level.

C. Locate signs and mount at heights indicated on drawings and in accordance with ADA Standards and ICC A117.1.

D. Protect from damage until Date of Substantial Completion; repair or replace damaged items.

END OF SECTION

SECTION 10 14 13

PIPING AND VALVE IDENTIFICATION SYSTEMS

PART 1 - GENERAL

1.01 SECTION INCLUDES

A. Identification systems for buried and exposed piping and valves.

1.02 REFERENCED SECTIONS

A. The following Sections are referenced in this Section

1. Section 01 33 00 – Submittals
2. Section 09 96 00 – High Performance Coatings
3. Section 40 05 10 – Piping Systems

1.03 SUBMITTALS

A. Comply with Section 01 33 00.

B. Include the following items:

1. Manufacturer's catalog information demonstrating compliance with the materials requirements of this section.
2. Samples of the materials to be used for piping and valve identification.
3. A schedule of piping services and description of identification systems.

PART 2 - PRODUCTS

2.01 PIPE CODING MARKERS

A. Manufacturers

1. One of the following or equal:

a. Brady Company.
b. Seton Name Plate Corporation.
c. Industrial Safety Supply Corporation.

B. Comply with ANSI A13.1.

C. Type

1. Mechanically attached type that is easily removable.
2. Do not use adhesive applied type.
3. Pressure sensitive legends applied to plastic backing which is strapped or otherwise mechanically attached to the pipe.

D. Legend and Backing

1. Resistant to petroleum based oils and grease.

2. Meet criteria for humidity, solar radiation, rain, salt, fog and leakage fungus, as specified by MIL-STD-810C.

E. Withstand a continuous operating temperature range of -40ºF to 180ºF.

F. Manufactured and applied in one continuous length of plastic. Do not provide individual letter type.

G. Provide in the following letter heights: For markers bearing the legends on the background colors specified in Section 40 05 10 (PIPESPEC).

Outside pipe diameter,[(a)] inches	Letter height, inches
Less than 1-1/2	1/2
1-1/2 through 3	1 1/8
Greater than 3	2-1/4
[(a)] Outside pipe diameter shall include insulation and jacketing.	

H. Include uni- and bi-directional arrows in the same sizes as the legend. Provide legends and arrows in white on blue or red backgrounds, and black on other specified backgrounds.

2.02 PLASTIC TRACER TAPE

A. Manufacturers

1. One of the following or equal:

a. Brady Company.

b. Seton Name Plate Corporation.

c. Industrial Safety Supply Corporation.

B. 6” wide, colored the same as the background colors as specified in Section 40 05 10.

C. Material: inert plastic material suitable for direct burial.

D. Capable of stretching to twice its original length.

E. Print two messages on the tape, both messages at maximum intervals of 2 feet.

1. First message: **“CAUTION CAUTION CAUTION PIPE BURIED BELOW”** with bold letters approximately 2” high.

2. Second message:

a. The blank in the first message shall contain the words **“NON-POTABLE WATER”** when used for W2 and IRR piping.

b. The blank in the first message shall contain the words **“RECLAIMED WASTEWATER”** when used for W3 piping.

c. The blank in the first message shall contain the words **“STORM DRAIN”** when used for SD piping.

d. The blank in the first message shall contain the word **“SEWER”** for all other piping systems.

2.03 MAGNETIC TRACER TAPE

A. Manufacturers

1. One of the following or equal:

a. Brady Co.

b. Seton Name Plate Corporation

c. Industrial Safety Supply Corporation.

B. Material

1. Acid and alkali-resistant polyethylene.

2. 3” wide.

3. 0.005” thick.

4. 1,500 psi strength and 140% elongation value.

C. Color the same as the background colors as specified in Section 40 05 10 and inscribe with the words **“CAUTION—PIPE BURIED BELOW”.**

2.04 VALVE IDENTIFICATION

A. Fabricate of stainless steel and inscribed with the specified valve number stamped in 1/4” high letters.

B. The label shall be of 1/16-inch thick stainless steel with a minimum size of 2 inches.

C. See Drawings for valve designation system.

PART 3 - EXECUTION

3.01 PIPING IDENTIFICATION

A. Pipe Coding

1. After application of the specified coating and insulation systems to new or existing piping, as specified in Section 09 96 00, identify exposed piping, interior and exterior, and piping in ceiling spaces, pipe trenches, pipe chases and valve boxes identified with plastic markers.

2. Locate legend markers and directional arrows at each side of walls, floors and ceilings, at one side of each piece of equipment, at piping intersections, and at approximately 50’ centers.

B. Plastic Tracer Tape

1. Provide a single line of plastic tracer tape as specified in this section, 2.5 feet above the centerline of each buried pipe.

2. Spread tape flat with message side up before backfilling.

C. Polyethylene Magnetic Tracer Tape

1. Install 12-18” below ground and parallel to all buried pipes.

3.02 VALVE IDENTIFICATION

A. Label all valves designated with a valve number where valve numbers are indicated on the Drawings.

B. Each label shall be permanently attached to the valve using stainless steel screws, stainless steel wire and connectors, or another method subject to approval.

C. Install tags on valve flanges in a position visible from floor level.

D. For flangeless valves 8” in diameter and larger, attach tags to the valve body by self-tapping corrosion resistant metal screws.

E. For flangeless valves 6” in diameter and smaller, attach tags to the valve stem by stainless steel wire. Use 0.063” wire minimum.

END OF SECTION

SECTION 10 44 00

FIRE PROTECTION SPECIALTIES

PART 1 - GENERAL

1.01 SECTION INCLUDES

A. Fire extinguishers.

B. Accessories.

1.02 RELATED REQUIREMENTS

A. Section 06 10 00 - Rough Carpentry: Wood blocking product and execution requirements.

B. Section 09 91 23 - Interior Painting: Field paint finish.

1.03 REFERENCE STANDARDS

A. FM (AG) - FM Approval Guide current edition.

B. NFPA 10 - Standard for Portable Fire Extinguishers 2022.

C. UL (DIR) - Online Certifications Directory Current Edition.

1.04 SUBMITTALS

A. See Section 01 33 00 - Submittals, for submittal procedures.

PART 2 - PRODUCTS

2.01 MANUFACTURERS

A. Fire Extinguishers:

1. Ansul, a Tyco Business: www.ansul.com/#sle .
2. Kidde, a unit of United Technologies Corp: www.kidde.com/#sle.
3. Nystrom, Inc: www.nystrom.com/#sle .
4. Oval Brand Fire Products; Oval Dry Chemical Fire Extinguisher - Multipurpose ABC: www.ovalfireproducts.com/#sle .
5. Potter-Roemer: www.potterroemer.com/#sle.
6. Pyro-Chem, a Tyco Business: www.pyrochem.com/#sle.
7. Or Equal.
8. Substitutions: See General Conditions 7.06, Substitutes.

2.02 FIRE EXTINGUISHERS

A. Fire Extinguishers - General: Comply with product requirements of NFPA 10 and applicable codes, whichever is more stringent.

1. Provide extinguishers labeled by UL (DIR) or FM (AG) for purpose specified and as indicated.

B. Multipurpose Dry Chemical Type Fire Extinguishers: Carbon steel tank, with pressure gauge.

1. Class: A:B:C type.

2. Temperature range: Minus 40 degrees F (Minus 40 degrees C) to 120 degrees F (49 degrees C).

2.03 FIRE EXTINGUISHER BRACKETS <ALL LOCATIONS EXCEPT ADMIN. BLDG.>

A. Manufacturer standard formed steel wall bracket.

2.04 ACCESSORIES

A. Lettering: FIRE EXTINGUISHER decal, or vinyl self-adhering, pre-spaced black lettering in accordance with authorities having jurisdiction (AHJ).

PART 3 - EXECUTION

3.01 EXAMINATION

A. Verify existing conditions before starting work.

B. Verify rough openings for cabinet are correctly sized and located.

3.02 INSTALLATION

A. Install in accordance with manufacturer's instructions.

B. Secure rigidly in place.

C. Place extinguishers on wall brackets.

END OF SECTION

SECTION 23 00 00

HEATING, VENTILATING AND AIR CONDITIONING (HVAC) BASIC REQUIREMENTS

PART 1 - GENERAL

1.01 SECTION INCLUDES

A. Work included in 23 00 00, HVAC Basic Requirements applies to Division 23, HVAC work to provide materials, labor, tools, permits, incidentals, and other services to provide and make ready for Owner's use of heating, ventilating and air conditioning systems for proposed project.

B. Contract Documents include, but are not limited to, Specifications including Division 00, Procurement and Contracting Requirements and Division 01, General Requirements, Drawings, Addenda, Owner/Engineer Agreement, and Owner/Contractor Agreement. Confirm requirements before commencement of work.

C. Definitions:

1. Provide: To furnish and install, complete and ready for intended use.

2. Furnish: Supply and deliver to project site, ready for unpacking, assembly and installation.

3. Install: Includes unloading, unpacking, assembling, erecting, installation, applying, finishing, protecting, cleaning and similar operations at project site as required to complete items of work provided.

4. Approved or Approved Equivalent: To possess the same performance qualities and characteristics and fulfill the utilitarian function without any decrease in quality, durability or longevity. For equipment/products defined by the Contractor as "equivalent", substitution requests must be submitted to Engineer for consideration, in accordance with Division 01, General Requirements, and approved by the Engineer prior to submitting bids for substituted items.

5. Authority Having Jurisdiction (AHJ): Indicates reviewing authorities, including local fire marshal, Owner's insurance underwriter, Owner's Authorized Representative, and other reviewing entity whose approval is required to obtain systems acceptance.

1.02 RELATED SECTIONS

A. Contents of Section applies to Division 23, HVAC Contract Documents.

B. Related Work:

1. Additional conditions apply to this Division including, but not limited to:

a. Specifications including Division 00, Procurement and Contracting Requirements and Division 01, General Requirements.

b. Drawings

c. Addenda

d. Owner/Engineer Agreement

e. Owner/Contractor Agreement

f. Codes, Standards, Public Ordinances and Permits

1.03 REFERENCES AND STANDARDS

A. References and Standards per Division 01, General Requirements, individual Division 23, HVAC Sections and those listed in this Section.

B. Codes to include latest adopted editions, including current amendments, supplements and local jurisdiction requirements in effect as of the date of the Contract Documents, of/from:

1. State of Oregon:

a. OAR - Oregon Administrative Rules

b. 2021 OESC - Oregon Electrical Specialty Code

c. 2019 OFC - Oregon Fire Code

d. 2019 OMSC - Oregon Mechanical Specialty Code

e. 2021 OPSC - Oregon Plumbing Specialty Code

f. 2019 OSSC - Oregon Structural Specialty Code

g. 2021 OEESC - Oregon Energy Efficiency Specialty Code

C. Reference standards and guidelines include but are not limited to the latest adopted editions from:

1. ABA - Architectural Barriers Act

2. ABMA - American Bearing Manufacturers Association

3. ADA - Americans with Disabilities Act

4. AHRI - Air-Conditioning Heating & Refrigeration Institute

5. AMCA - Air Movement and Control Association

6. ANSI - American National Standards Institute

7. ASCE - American Society of Civil Engineers

8. ASHRAE - American Society of Heating, Refrigeration and Air-Conditioning Engineers

9. ASHRAE Guideline 0, The Commissioning Process

10. ASME - American Society of Mechanical Engineers

11. ASPE - American Society of Plumbing Engineers

12. ASSE - American Society of Sanitary Engineering

13. ASTM - ASTM International

14. AWWA - American Water Works Association

15. CFR - Code of Federal Regulations

16. CGA - Compressed Gas Association

17. CISPI - Cast Iron Soil Pipe Institute

18. EPA - Environmental Protection Agency
19. ETL - Electrical Testing Laboratories
20. FM - FM Global
21. GAMA - Gas Appliance Manufacturers Association
22. HI - Hydraulic Institute Standards
23. IAPMO - International Association of Plumbing & Mechanical Officials
24. IFGC - International Fuel Gas Code
25. ISO - International Organization for Standardization
26. MSS - Manufacturers Standardization Society
27. NEC - National Electric Code
28. NEMA - National Electrical Manufactures Association
29. NFPA - National Fire Protection Association
30. NFGC - National Fuel Gas Code
31. NRCA - National Roofing Contractors Association
32. NSF - National Sanitation Foundation
33. OSHA - Occupational Safety and Health Administration
34. SMACNA - Sheet Metal and Air Conditioning Contractors' National Association, Inc.
35. TEMA - Tubular Exchanger Manufactures Association
36. TIMA - Thermal Insulation Manufactures Association
37. UL - Underwriters Laboratories, Inc.

D. See Division 23, HVAC individual Sections for additional references.

1.04 SUBMITTALS

A. See Division 01, General Requirements for Submittal Procedures as well as specific individual Division 23, HVAC Sections.

B. Provide drawings in format and software release equal to the design documents. Drawings to be the same sheet size and scale as the Contract Documents.

C. In addition:

1. "No Exception Taken" constitutes that review is for general conformance with the design concept expressed in the Contract Documents for the limited purpose of checking for conformance with information given. Any action is subject to the requirements of the Contract Documents. Contractor is responsible for the dimensions and quantity and will confirm and correlate at the job site, fabrication processes and techniques of construction, coordination of the work with that of all other trades, and the satisfactory performance of the work.

2. Provide product submittals and shop drawings in electronic format only. Electronic format must be submitted via zip file via e-mail or posted to ftp site and be native/searchable PDF format. Scanned copies are not acceptable. For electronic format, provide one file per division containing one bookmarked PDF file with each bookmark corresponding to each Specification Section. Arrange bookmarks in ascending order of Specification Section number. Individual submittals sent piecemeal in a per Specification Section method will be returned without review or comment. All transmissions/submissions to be submitted to Architect. At Contractor's option, four separate submittals may be provided, consisting of long lead items, underground/site work, building work, and building automation system. Deviations will be returned without review.

3. Product Data: Provide Manufacturer's descriptive literature for products specified in Division 23, HVAC Sections.

4. Identify/mark each submittal in detail. Note what differences, if any, exist between the submitted item and the specified item. Failure to identify the differences will be considered cause for disapproval. If differences are not identified and/or not discovered during the submittal review process, Contractor remains responsible for providing equipment and materials that meet the Specifications and Drawings.

    a. Label submittal to match numbering/references as shown in Contract Documents. Highlight and label applicable information to individual equipment or cross out/remove extraneous data not applicable to submitted model. Clearly note options and accessories to be provided, including field installed items. Highlight connections by/to other trades.

    b. Include technical data, installation instructions and dimensioned drawings for products, fixtures, equipment and devices installed, furnished or provided. Reference individual Division 23, HVAC Specification Sections for specific items required in product data submittal outside of these requirements.

    c. Provide pump curves, operation characteristics, capacities, ambient noise criteria, etc. for equipment.

    d. For vibration isolation of equipment, list make and model selected with operating load and deflection.

    e. See Division 23, HVAC individual Sections for additional submittal requirements outside of these requirements.

5. Maximum of two reviews of submittal package. Arrange for additional reviews and/or early review of long-lead items; Bear costs of these additional reviews at Engineer's hourly rates. Incomplete submittal packages/submittals will be returned to contractor without review.

6. Resubmission Requirements: Make corrections or changes in submittals as required, and in consideration of Engineer's comments. Identify Engineer's comments and provide an individual response to each of the Engineer's comments. Cloud changes in the submittals and further identify changes which are in response to Engineer's comments.

7. Structural/Seismic: Provide weights, dimensions, mounting requirements and like information required for mounting, seismic bracing, and support. Indicate manufacturer's installation and support requirements to meet Section 23 05 48, Vibration and Seismic Controls for HVAC Equipment. Provide engineered seismic drawings and equipment seismic certification. Equipment Importance Factor as specified in Division 01 and in Structural documents.

8. Trade Coordination: Include physical characteristics, electrical characteristics, device layout plans, wiring diagrams, and connections as required by Division 23, HVAC Coordination Documents. For equipment with electrical connections, furnish copy of approved submittal for inclusion in Division 26, Electrical submittals.

9. Make provisions for openings in building for admittance of equipment prior to start of construction or ordering of equipment.

10. Substitutions and Variation from Basis of Design:

    a. The Basis of Design designated product establishes the qualities and characteristics for the evaluation of any comparable products by other listed acceptable manufacturers if included in this Specification or included in an approved Substitution Request as judged by the Design Professional.

    b. If substitutions and/or equivalent equipment/products are being proposed, it is the responsibility of parties concerned, involved in, and furnishing the substitute and/or equivalent equipment to verify and compare the characteristics and requirements of that furnished to that specified and/or shown. If greater capacity and/or more materials and/or more labor is required for the rough-in, circuitry or connections than for the item specified and provided for, then provide compensation for additional charges required for the proper rough-in, circuitry and connections for the equipment being furnished. No additional charges above the Base Bid, including resulting charges for work performed under other Divisions, will be allowed for such revisions. Coordinate with the requirements of "Submittals". For any product marked "or approved equivalent", a substitution request must be submitted to Engineer for approval prior to purchase, delivery or installation.

11. Shop Drawings: Provide coordinated shop drawings which include physical characteristics of all systems, equipment, ductwork and piping layout plans, and control wiring diagrams. Reference individual Division 23, HVAC Specification Sections for additional requirements for shop drawings outside of these requirements.

    a. Provide Shop Drawings indicating access panel locations for items that require Code or maintenance access, size and elevation for approval prior to installation.

12. Samples: Provide samples when requested by individual Sections.

13. Resubmission Requirements:

a. Make any corrections or change in submittals when required. Provide submittals as specified. The engineer will not be required to edit and/or interpret the Contractor's submittals. Indicate changes for the resubmittal in a cover letter with reference to page(s) changed and reference response to comment. Cloud changes in the submittals.

1) Resubmit for review until review indicates no exception taken or make "corrections as noted".

2) When submitting drawings for Engineers re-review, clearly indicate changes on drawings and "cloud" any revisions. Submit a list describing each change.

14. Operation and Maintenance Manuals, Owner's Instructions:

a. Submit, at one time, electronic files (native/searchable PDF format) of manufacturer's operation and maintenance instruction manuals and parts lists for equipment or items requiring servicing. Include valve charts. Submit data when work is substantially complete and in same order format as submittals. Include name and location of source parts and service for each piece of equipment.

1) Include copy of approved submittal data along with submittal review letters received from Engineer. Data to clearly indicate installed equipment model numbers. Delete or cross out data pertaining to other equipment not specific to this project.

2) Include copy of manufacturer's standard Operations and Maintenance for equipment. At front of each tab, provide routine maintenance documentation for scheduled equipment. Include manufacturer's recommended maintenance schedule and highlight maintenance required to maintain warranty. Furnish list of routine maintenance parts, including part numbers, sizes, quantities, relevant to each piece of equipment: belts, motors, lubricants, and filters.

3) Include Warranty per Division 00, Procurement and Contracting Requirements and Division 01, General Requirements, Section 23 00 00, HVAC Basic Requirements and individual Sections.

4) Include product certificates of warranties and guarantees.

5) Include copy of complete parts list for equipment. Include available exploded views of assemblies and sub assemblies.

6) Include copy of startup and test reports specific to each piece of equipment.

7) Include copy of final air and water systems balancing log along with pump, fan and distribution system operating data.

8) Include commissioning reports.

9) Include copy of valve charts/schedules.

10) Engineer will return incomplete documentation without review. Engineer will provide one set of review comments in Submittal

Review format. Contractor must arrange for additional reviews; Contractor to bear costs for additional reviews at Engineer's hourly rates.

b. Thoroughly instruct Owner in proper operation of equipment and systems. Where noted in individual Sections, training will include classroom instruction with applicable training aids and systems demonstrations. Field instruction per Section 23 00 00, HVAC Basic Requirements Article titled "Demonstration".

c. Copies of certificates of code authority inspections, acceptance, code required acceptance tests, letter of conformance and other special guarantees, certificates of warranties, specified elsewhere or indicated on Drawings.

15. Record Drawings:

a. Maintain at site at least one set of drawings for recording “As-constructed” conditions. Indicate on drawings changes to original documents by referencing revision document, and include buried elements, location of cleanouts, and location of concealed mechanical items. Include items changed by field orders, supplemental instructions, and constructed conditions.

b. Record Drawings are to include equipment and fixture/connection schedules, control dampers, fire smoke dampers, fire dampers, valves, bottom of pipe, duct and equipment elevations and dimensioned locations for all distribution systems (hydronic and air). Invert elevations and dimensioned locations for underground systems below grade to 5-feet outside building that accurately reflect "as constructed or installed" for project.

c. At completion of project, input changes to original project CAD Drawings and make one set of black-line drawings created from CAD Files in version/release equal to contract drawings. Submit CAD Files and drawings upon substantial completion.

d. See Division 23, HVAC individual Sections for additional items to include in record drawings.

1.05 QUALITY ASSURANCE

A. Regulatory Requirements: Work and materials installed to conform with all local, State and Federal codes, and other applicable laws and regulations. Where code requirements are at variance with Contract Documents, meet code requirements as a minimum requirement and include costs necessary to meet these in Contract. Machinery and equipment are to comply with OSHA requirements, as currently revised and interpreted for equipment manufacturer requirements. Install equipment provided per manufacturer recommendations.

B. Whenever this Specification calls for material, workmanship, arrangement or construction of higher quality and/or capacity than that required by governing codes, higher quality and/or capacity take precedence.

C. Drawings are intended to be diagrammatic and reflect the Basis of Design manufacturer's equipment. They are not intended to show every item in its exact dimensions, or details of equipment or proposed systems layout. Verify actual dimensions of systems (i.e., piping) and equipment proposed to assure that systems and equipment will fit in available space. Contractor is responsible for design and construction costs incurred for equipment other than Basis of Design, including, but not limited to, architectural, structural, electrical, HVAC, fire sprinkler, and plumbing systems.

D. Manufacturer's Instructions: Follow manufacturer's written instructions. If in conflict with Contract Documents, obtain clarification. Notify Engineer/Architect, in writing, before starting work.

E. Items shown on Drawings are not necessarily included in Specifications or vice versa. Confirm requirements in all Contract Documents.

F. Provide products that are UL listed.

G. Piping and duct insulation products to contain less than 0.1 percent by weight PBDE in all insulating materials.

H. ASME Compliance: ASME listed water heaters and boilers with an input of 200,000 BTUH and higher, hot water storage tanks which exceed 120 gallons, and hot water expansion tanks which are connected to ASME rated equipment or required by code or local jurisdiction.

I. Provide safety controls required by National Boiler Code (ASME CSD 1) for boilers and water heaters with an input of 400,000 BTUH and higher.

1.06 WARRANTY

A. Provide written warranty covering the work for a period of one year from date of Substantial Completion in accordance with Division 00, Contracting and Procurement Requirements, Division 01, General Requirements, Section 23 00 00, HVAC Basic Requirements and individual Division 23, HVAC Sections.

B. Sections under this Division can require additional and/or extended warranties that apply beyond basic warranty under Division 01, General Requirements and the General Conditions. Confirm requirements in all Contract Documents.

1.07 COORDINATION DOCUMENTS

A. Prior to construction, coordinate installation and location of HVAC equipment, ductwork, grilles, diffusers, piping, equipment, fire sprinklers, plumbing, cable trays, lights, and electrical services with architectural and structural requirements, and other trades (including ceiling suspension, and tile systems), and provide maintenance access requirements. Coordinate with submitted architectural systems (i.e. roofing, ceiling, finishes) and structural systems as submitted, including footings and foundation. Identify zone of influence from footings and ensure systems are not routed within the zone of influence.

B. Advise Architect in event a conflict occurs in location or connection of equipment. Bear costs resulting from failure to properly coordinate installation or failure to advise Architect of conflict.

C. Submit final Coordination Drawings with changes as Record Drawings at completion of project.

PART 2 - PRODUCTS

2.01 MANUFACTURERS

A. Articles, fixtures, and equipment of a kind to be standard product of one manufacturer, including but not limited to pumps, fans, valves, control devices, air handlers, vibration isolation devices, etc.

2.02 STANDARDS OF MATERIALS AND WORKMANSHIP

A. Base contract upon furnishing materials as specified. Materials, equipment, and fixtures used for construction are to be new, latest products as listed in manufacturer's printed catalog data and are to be UL or ETL listed and labeled or be approved by State, County, and City authorities prior to procurement and installation.

B. Names and manufacturer's names denote character and quality of equipment desired and are not to be construed as limiting competition.

C. Hazardous Materials:

1. Comply with local, State of Oregon, and Federal regulations relating to hazardous materials.

2. Comply with Division 00, Procurement and Contracting Requirements and Division 01, General Requirements for this project relating to hazardous materials.

3. Do not use any materials containing a hazardous substance. If hazardous materials are encountered, do not disturb; immediately notify Owner and Architect. Hazardous materials will be removed by Owner under separate contract.

PART 3 - EXECUTION

3.01 ACCESSIBILITY AND INSTALLATION

A. Confirm Accessibility and Installation requirements in Division 00, Procurement and Contracting Requirements and Division 01, General Requirements, Section 23 00 00, HVAC Basic Requirements and individual Division 23, HVAC Sections.

B. Install equipment having components requiring access (i.e., drain pans, drains, control operators, valves, motors and vibration isolation devices) so that they may be serviced, reset, replaced or recalibrated by service people with normal service tools and equipment. Do not install equipment in obvious passageways, doorways, scuttles or crawlspaces which would impede or block intended usage.

C. Install equipment and products complete as directed by manufacturer's installation instructions including all appurtenances recommended in manufacturer's installation instructions, at no additional charge to Owner. Obtain installation instructions from manufacturer prior to rough-in of equipment and examine instructions thoroughly. When requirements of installation instructions conflict with Contract Documents, request

clarification from Architect prior to proceeding with installation. This includes proper installation methods, sequencing and coordination with other trades and disciplines.

D. Firestopping:

1. Confirm Firestopping requirements in Division 07, Thermal and Moisture Protection. In absence of specific requirements, comply with individual Division 23, HVAC Sections and the following:

a. Coordinate location and protection level of fire and/or smoke rated walls, ceilings, and floors. When these assemblies are penetrated, seal around piping, ductwork and equipment with approved firestopping material. Install firestopping material complete as directed by manufacturer's installation instructions. Meet requirements of ASTM E814, Standard Test Method for Fire Tests of Through-Penetration Fire Stops.

E. Pipe Installation:

1. Provide installation of piping systems coordinated to account for expansion and contraction of piping materials and building, as well as anticipated settlement or shrinkage of building. Install work to prevent damage to piping, equipment, and building and its contents. Provide piping offsets, loops, seismic flexible joints, expansion joints, sleeves, anchors or other means to control pipe movement and minimize forces on piping. Verify anticipated settlement and/or shrinkage of building with Project Structural Engineer. Verify construction phasing, type of building construction products and rating for coordinating installation of piping systems.

2. Include provisions for servicing and removal of equipment without dismantling piping.

F. Plenums:

1. Plenums: Materials within plenums shall be noncombustible or shall have a flame spread index of not more than 25 and a smoke-developed index of not more than 50 when tested in accordance with ASTM E 84 or UL 723. Immediately notify Architect / Engineer of any discrepancy.

3.02 SEISMIC CONTROL

A. Confirm Seismic Control requirements in Division 01, General Requirements, Structural documents, and individual Division 23 HVAC Sections.

B. General:

1. Earthquake resistant designs for HVAC (Division 23) equipment and distribution, i.e. motors, ductwork, piping, equipment, etc. to conform to regulations of jurisdiction having authority.

2. Restraints which are used to prevent disruption of function of piece of equipment because of application of horizontal force to be such that forces are carried to frame of structure in such a way that frame will not be deflected when apparatus is attached to a mounting base and equipment pad, or to structure in normal way, utilizing attachments provided. Secure equipment and distribution systems to

withstand a force in direction equal to value defined by jurisdiction having authority.

3. Provide stamped Shop Drawings from licensed Structural Engineer of seismic bracing and seismic movement assemblies for piping equipment and water heaters. Submit Shop Drawings along with equipment submittals.

4. Provide stamped Shop Drawings from licensed Structural Engineer of seismic flexible joints for piping and crossing building expansion or seismic joints. Submit Shop Drawings along with seismic bracing details.

C. Piping and Ductwork:

1. Per "Seismic Restraints Manual Guidelines for Mechanical Systems" latest edition published by SMACNA or local requirements.

D. Provide means to prohibit excessive motion of mechanical equipment during earthquake.

3.03 REVIEW AND OBSERVATION

A. Confirm Review and Observation requirements in Division 00, Procurement and Contracting Requirements, Division 01, General Requirements, Section 23 00 00, HVAC Basic Requirements and individual Division 23, HVAC Sections.

B. Notify Architect, in writing, at following stages of construction so that they may, at their option, visit site for review and construction observation:

1. Underground system installation prior to backfilling.

2. Prior to covering walls.

3. Prior to ceiling cover/installation.

4. After major equipment is installed.

5. When main systems, or portions of, are being tested and ready for inspection by AHJ.

C. Final Punch:

1. Prior to requesting a final punch visit from the Engineer, request from Engineer the Mechanical Precloseout Checklist, complete the checklist confirming completion of systems' installation, and return to Engineer. Request a final punch visit from the Engineer, upon Engineer's acceptance that the mechanical systems are ready for final punch.

2. Costs incurred by additional trips required due to incomplete systems will be the responsibility of the Contractor.

3.04 CUTTING AND PATCHING

A. Confirm Cutting and Patching requirements in Division 00, Procurement and Contracting Requirements and Division 01, General Requirements. In absence of specific requirements, comply with individual Division 23, HVAC Sections and the following:

1. Proposed floor cutting/core drilling/sleeve locations to be approved by Project Structural Engineer. Submit proposed locations to Architect/Project Structural Engineer. Where slabs are of post tension construction, perform x-ray scan of

proposed penetration locations and submit scan results including proposed penetration locations to Project Structural Engineer/Architect for approval. Where slabs are of waffle type construction, show column cap extent and cell locations relative to proposed penetration(s).

2. Cutting, patching and repairing for work specified in this Division including plastering, masonry work, concrete work, carpentry work, and painting included under this Section will be performed by skilled craftsmen of each respective trade in conformance with appropriate Division of Work.

3. Additional openings required in building construction to be made by drilling or cutting. Use of jack hammer is specifically prohibited. Patch openings in and through concrete and masonry with grout.

4. Restore new or existing work that is cut and/or damaged to original condition. Patch and repair specifically where existing items have been removed. This includes repairing and painting walls, ceilings, etc. where existing conduit and devices are removed as part of this project. Where alterations disturb lawns, paving, and walks, surfaces to be repaired, refinished and left in condition matching existing prior to commencement of work.

5. Additional work required by lack of proper coordination will be provided at no additional cost to the Owner.

3.05 EQUIPMENT SELECTION AND SERVICEABILITY

A. Replace or reposition equipment which is too large or located incorrectly to permit servicing, at no additional cost to Owner.

B. Maintain design intent where equipment other than as shown as Basis of Design in Contract Documents is provided. Where equipment requires ductwork or piping arrangement, controls/control diagrams, or sequencing different from that indicated in Contract Documents, provide at no additional cost to Owner.

3.06 DELIVERY, STORAGE AND HANDLING

A. Confirm requirements in Division 00, Procurement and Contracting Requirements and Division 01, General Requirements. In absence of specific requirements, comply with individual Division 23, HVAC Sections and the following:

1. Handle materials delivered to project site with care to avoid damage. Store materials on site inside building or protected from weather, dirt and construction dust. Insulation and lining that becomes wet from improper storage and handling to be replaced before installation. Products and/or materials that become damaged due to water, dirt, and/or dust as a result of improper storage to be replaced before installation.

2. Protect equipment and pipe to avoid damage. Close pipe openings with caps or plugs. Keep motors and bearings in watertight and dustproof covers during entire course of installation.

3. Protect bright finished shafts, bearing housings and similar items until in service.

3.07 DEMONSTRATION

A. Confirm Demonstration requirements in Division 00, Procurement and Contracting Requirements and Division 01, General Requirements, Section 23 00 00, HVAC Basic Requirements and individual Division 23, HVAC Sections.

B. Upon completion of work and adjustment of equipment and test systems, demonstrate to Owner's Authorized Representative, Architect and Engineer that equipment furnished and installed or connected under provisions of these Specifications functions in manner required. Provide field instruction to Owner's Maintenance Staff as specified in Division 01, General Requirements, Section 23 00 00, HVAC Basic Requirements and individual Division 23, HVAC Sections.

C. Manufacturer's Field Services: Furnish services of a qualified person at time approved by Owner, to instruct maintenance personnel, correct defects or deficiencies, and demonstrate to satisfaction of Owner that entire system is operating in satisfactory manner and complies with requirements of other trades that may be required to complete work. Complete instruction and demonstration prior to final job site observations.

3.08 CLEANING

A. Confirm Cleaning requirements in Division 00, Procurement and Contracting Requirements, Division 01, General Requirements, Section 23 00 00, HVAC Basic Requirements and individual Division 23, HVAC Sections.

B. Upon completion of installation, thoroughly clean exposed portions of equipment, removing temporary labels and traces of foreign substances. Throughout work, remove construction debris and surplus materials accumulated during work.

3.09 INSTALLATION

A. Confirm Installation requirements in Division 00, Procurement and Contracting Requirements, Division 01, General Requirements, Section 23 00 00, HVAC Basic Requirements and individual Division 23, HVAC Sections.

B. Install equipment and fixtures in accordance with manufacturer's installation instructions, plumb and level and firmly anchored to vibration isolators. Maintain manufacturer's recommended clearances.

C. Start up equipment, in accordance with manufacturer's start-up instructions, and in presence of manufacturer's representative. Test controls and demonstrate compliance with requirements. Replace damaged or malfunctioning controls and equipment.

1. Do not place equipment in sustained operation prior to initial balancing of HVAC systems.

D. Provide miscellaneous supports/metals required for installation of equipment, piping and ductwork.

3.10 PAINTING

A. Confirm Painting requirements in Division 01, General Requirements and Division 09, Finishes. In absence of specific requirements, comply with individual Division 23, HVAC Sections and the following:

1. Ferrous Metal: After completion of work, thoroughly clean and paint exposed supports constructed of ferrous metal surfaces in mechanical rooms, i.e., hangers, hanger rods, equipment stands, with one coat of black asphalt varnish for exterior or black enamel for interior, suitable for hot surfaces.

2. After acceptance by Authority Having Jurisdiction (AHJ), In a mechanical room, on roof or other exposed areas, machinery and equipment not painted with enamel to receive two coats of primer and one coat of rustproof enamel, colors as selected by Architect.

3. See individual equipment Specifications for other painting.

4. Structural Steel: Repair damage to structural steel finishes or finishes of other materials damaged by cutting, welding or patching to match original.

5. Piping and Ductwork: Clean, primer coat and paint exposed piping and ductwork on roof or at other exterior locations with two coats paint suitable for metallic surfaces and exterior exposures. Color selected by Architect.

6. Covers: Covers such as manholes, cleanouts and the like will be furnished with finishes which resist corrosion and rust.

3.11 ACCEPTANCE

A. Confirm requirements in Division 00, Procurement and Contracting Requirements and Division 01, General Requirements. In absence of specific requirements, comply with individual Division 23, HVAC Sections and the following:

1. System cannot be considered for acceptance until work is completed and demonstrated to Architect that installation is in strict compliance with Specifications, Drawings and manufacturer's installation instructions, particularly in reference to following:

a. Testing and Balancing Reports

b. Cleaning

c. Operation and Maintenance Manuals

d. Training of Operating Personnel

e. Record Drawings

f. Warranty and Guaranty Certificates

g. Start-up/Test Document

h. Commissioning Reports

3.12 FIELD QUALITY CONTROL

A. Confirm Field Quality Control requirements in Division 01, General Requirements, Section 23 00 00, HVAC Basic Requirements and individual Division 23, HVAC Sections.

B. Tests:

1. Conduct tests of equipment and systems to demonstrate compliance with requirements specified. Reference individual Specification Sections for required tests. Document tests and include in Operation and Maintenance Manuals.

2. During site evaluations by Architect or Engineer, provide appropriate personnel with tools to remove and replace trims, covers, and devices so that proper evaluation of installation can be performed.

3.13 LETTER OF CONFORMANCE

A. Provide Letter of Conformance, copies of manufacturers' warranties and extended warranties with a statement that HVAC items were installed in accordance with manufacturer's recommendations, UL listings and FM Global approvals. Include Letter of Conformance, copies of manufacturers' warranties and extended warranties in Operation and Maintenance Manuals.

3.14 ELECTRICAL INTERLOCKS

A. Where equipment motors are to be electrically interlocked with other equipment for simultaneous operation, utilize equipment wiring diagrams to coordinate with electrical systems so that proper wiring of equipment involved is affected.

3.15 TEMPORARY HEATING, COOLING AND HUMIDITY CONTROL

A. Provide temporary heating, cooling, controls, humidification and dehumidification as required to facilitate the construction of the project. Size and select temporary system based on the requirements of the various trades during construction. This includes, but is not limited to, drywall, case work, wood flooring and wood finishes that are subject to warping. Size and install system to prevent mold growth. Coordinate the location of the temporary system. The house system can be used. Develop a procedure for how the house system will be used including a sketch depicting the house system, how filtration will be used to prevent construction debris from entering the system and how often the filters will be changed, how the ductwork will be cleaned after use to ensure a clean system is turned over to the Owner and how the units are sized. Submit this procedure to the Mechanical Engineer for review. Follow National Air Duct Cleaners Association (NADCA) duct cleaning procedures and guidelines. Warranties for the house system, if new, to commence when the Owner moves in if house system is used as the means to maintain the climate within the building during construction. Include this warranty requirement in the original bid or proposal amount. Coordinate and provide any temporary power, controls, ductwork, piping, plumbing anchorage, miscellaneous steel and structural supports required to support the temporary system. Installation of the system to comply with all applicable codes and be acceptable to the Authority Having Jurisdiction (AHJ).

END OF SECTION

(THIS PAGE LEFT BLANK INTENTIONALLY)

SECTION 23 05 13

COMMON MOTOR REQUIREMENTS FOR HVAC EQUIPMENT

PART 1 - GENERAL

1.01 SUMMARY

A. Work Included:

1. Starters
2. Shaft Grounding
3. Motors

1.02 RELATED SECTIONS

A. Contents of Division 23, HVAC and Division 01, General Requirements apply to this Section.

1.03 REFERENCES AND STANDARDS

A. References and Standards as required by Section 23 00 00, HVAC Basic Requirements and Division 01, General Requirements.

B. In addition, meet the following:

1. NEMA Premium Efficiency
2. Energy Policy Act (EPACT), latest applicable version(s) for minimum motor efficiencies.

1.04 SUBMITTALS

A. Submittals as required by Section 23 00 00, HVAC Basic Requirements and Division 01, General Requirements.

1.05 QUALITY ASSURANCE

A. Quality assurance as required by Section 23 00 00, HVAC Basic Requirements and Division 01, General Requirements.

B. In addition, meet the following:

1. Field Installed Motors: Installed motors to be of single type, from one source and from a single manufacturer.
2. Electrical components and materials to be UL and ETL listed/labeled as suitable for location and use.

1.06 WARRANTY

A. Warranty of materials and workmanship as required by Section 23 00 00, HVAC Basic Requirements and Division 01, General Requirements.

PART 2 - PRODUCTS

2.01 MANUFACTURERS

A. Starters:

1. Cerus
2. Eaton Electrical
3. General Electric
4. Siemens
5. Schneider Electric/Square D
6. Or approved equivalent.

B. Shaft Grounding:

1. Shaft Grounding Inc.
2. Aegis SGR Bearing Protection Ring
3. Or approved equivalent.

C. Motors:

1. Lincoln Motor
2. Century Electric Motors (formerly A.O. Smith Electrical Products)
3. Baldor Electric
4. General Electric
5. Toshiba
6. Exception: Motors integral to equipment efficiency listing (EER, COP, etc.) per listing agency.
7. Or approved equivalent.

2.02 STARTERS

A. Single Phase Motors:

1. Manual across-the-line starting switch having toggle-operated switch pilot running light and built-in thermal overload device with heating element rated not more than 115 percent motor full load current indicated on name plate of motor to be protected. Surface mount starters. Provide NEMA-1 enclosure.
2. Overload relays to be melting alloy type with a replaceable control circuit module. Thermal units to be interchangeable. Starter to be non operative if thermal unit is removed.
3. Single-phase motors with automatic controls. Provide motor-rated relay with coils rated for control voltage.

B. Starters up to Size 8 to be suitable for the addition of a minimum of three external auxiliary contacts (normally open or normally closed). Contactor, coils, and relays to perform the control functions of the associated equipment and control sequence.

C. Three Phase Motors up to and Including 15 HP:

1. Provide enclosed type magnetic across-the-line starter with thermal overload and undervoltage protection.

2. Operator: "Start-Stop" pushbutton, except where automatic control is indicated on Drawings or specified. Then provide "Hand-Off-Auto" selector switch.

3. Starters for 3-phase motors to have overload protection in each of the three legs, with external manual reset.

4. Unless indicated on Drawings or in Specifications, furnish motor starters with a neon pilot light. Neon lights are required for exhaust fan switches.

5. Equip starters with integral transformer and coil for control circuit. Coordinate coil voltage with control voltage.

2.03 SHAFT GROUNDING

A. Variable Speed Motor Shaft Grounding: Shaft grounding ring; solid ring type.

B. Provide shaft grounding assembly on motors controlled by variable frequency drive. Shaft grounding device to be in the form of brush that resides on the motor shaft. Brush assembly shall be capable of tolerating misalignment and maintaining rotating contact throughout the motors life.

C. Material: Material used in the grounding assembly shall be stable material commonly used within industry that is not believed to constitute a hazardous material under Occupational Safety & Health Administration (OSHA) regulations.

D. Brushes: Specifically developed carbon compounds of sustained performance with wear life expectancy of 3 years minimum.

E. Seals: Sealed type to keep contaminants from entering the shaft grounding system in wet or severe environment applications.

F. Shaft Grounding Assembly: For clean room air handling systems, use the type that contains the wear products within a special enclosure within the shaft grounding system.

2.04 MOTORS

A. Construction:

1. Open drip-proof type except where specifically noted otherwise.

2. Design for continuous operation in 40 degrees C environment.

3. Design for temperature rise in accordance with NEMA MG 1 limits for insulation class, service factor, and motor enclosure type.

4. Built-in thermal overload protection or externally protected with separate overload with low-voltage release or lock-out. Quick trip device on hermetically sealed motors.

5. Service Factor: 1.15 for poly-phase motors except 1.25 for motors associated with shaft pressurization system fans and 1.35 for single phase motors.

6. Efficiency: Provide NEMA Premium Efficiency motors.

7. Motors used in conjunction with variable speed drives: Variable torque type matched for the full operating range of the variable frequency drive. As a minimum, motors to have Class F insulation, winding insulation rated for 1000 Volts and insulated bearings to prevent high frequency ground path. Loads not-to-exceed 80 percent of nameplate rating

B. Visible Nameplate: Indicating motor horsepower, voltage, phase, cycles, RPM, full load amps, locked rotor amps, frame size, manufacturer's name and model number, service factor, power factor, efficiency.

C. Wiring Terminations:

1. Provide terminal lugs to match branch circuit conductor quantities, sizes, and materials indicated. Coordinate conductor sizes with Division 26, Electrical. Enclose terminal lugs in terminal box sized to NFPA 70, threaded for conduit.

2. For fractional horsepower motors where connection is made directly, provide conduit connection in end frame.

D. Single Phase Power, Split Phase Motors:

1. Starting Torque: Less than 150 percent of full load torque.

2. Starting Current: Up to seven times full load current.

3. Breakdown Torque: Approximately 200 percent of full load torque.

4. Drip-proof Enclosure: Class A (50 degrees C temperature rise) insulation, NEMA Service Factor, prelubricated sleeve or ball bearings.

5. Enclosed Motors: Class A (50 degrees C temperature rise) insulation, 1.0 Service Factor, prelubricated ball bearings.

E. Single Phase Power, Permanent-Split Capacitor Motors:

1. Starting Torque: Exceeding one fourth of full load torque.

2. Starting Current: Up to six times full load current.

3. Multiple Speed: Through tapped windings.

4. Open Drip-proof or Enclosed Air Over Enclosure: Class A (50 degrees C temperature rise) insulation, minimum 1.0 Service Factor, prelubricated sleeve or ball bearings, automatic reset overload protector.

F. Single Phase Power, Capacitor Start Motors:

1. Starting Torque: Three times full load torque.

2. Starting Current: Less than five times full load current.

3. Pull-up Torque: Up to 350 percent of full load torque.

4. Breakdown Torque: Approximately 250 percent of full load torque.

5. Motors: Capacitor in series with starting winding; provide capacitor-start/capacitor-run motors with two capacitors in parallel with run capacitor remaining in circuit at operating speeds.

6. Drip-proof Enclosure: Class A (50 degrees C temperature rise) insulation, NEMA Service Factor, prelubricated sleeve bearings.

7. Enclosed Motors: Class A (50 degrees C temperature rise) insulation, 1.0 Service Factor, prelubricated ball bearings.

G. Three Phase Power, Squirrel Cage Motors:

1. Starting Torque: Between 1 and 1-1/2 times full load torque.

2. Starting Current: Six times full load current.

3. Power Output, Locked Rotor Torque, Breakdown or Pull Out Torque: NEMA Design B characteristics.

4. Design, Construction, Testing, and Performance: Conform to NEMA MG 1 for Design B motors.

5. Insulation System: NEMA Class B or better. Use class F insulation when motors are controlled by a VFD.

6. Testing Procedure: In accordance with IEEE 112. Load test motors to determine free from electrical or mechanical defects in compliance with performance data.

7. Motor Frames: NEMA Standard T-Frames of steel, aluminum, or cast iron with end brackets of cast iron or aluminum with steel inserts.

8. Thermistor System (Motor Frame Sizes 254T and Larger): Three PTC thermistors imbedded in motor windings and epoxy encapsulated solid state control relay for wiring into motor starter.

9. Bearings: Grease lubricated anti-friction ball bearings with housings equipped with plugged provision for relubrication, rated for minimum ABMA STD 9, L-10 life of 200,000 hours. Calculate bearing load with NEMA minimum V-belt pulley with belt center line at end of NEMA standard shaft extension. Stamp bearing sizes on nameplate.

10. Sound Power Levels: To NEMA MG 1.

11. Weatherproof Epoxy Treated Motors: Epoxy coat windings with rotor and starter surfaces protected with epoxy enamel; bearings double shielded with waterproof non-washing grease.

12. Nominal Efficiency: Meet or exceed NEMA Premium Efficiency rating when tested in accordance with IEEE 112.

13. Nominal Power Factor: Minimum at full load and rated voltage when tested in accordance with IEEE 112.

PART 3 - EXECUTION

3.01 GENERAL INSTALLATION

A. Coordinate location of disconnect and starter or motor controller. Combination starter/disconnects may be used in lieu of separate items.

B. Explosion-Proof Motors: UL approved and labeled for hazard classification, with over temperature protection.

C. Provide inverter ready motors per NEMA MG1-30 for variable speed drive or soft-start starter use. Provide shaft grounding for motors over 2 HP serving variable speed drives. Provide shaft grounding and insulated bearings on motors 25 HP and larger serving variable speed drives. Shielded cable required for power wiring from variable speed drive to motor connection.

D. Unless otherwise indicated, motors 1-HP and larger to meet/exceed NEMA Premium Efficiency and latest EPACT.

E. Vertical in-line pump motors per NEMA MG1 vertical motor requirements.

F. Exception: Motors less than 250 watts, for intermittent service, motors furnished with equipment manufacturer's standard package equipment need not conform to these specifications.

G. Single phase motors for air compressors and pumps: Capacitor start type.

H. Motors located in exterior locations or wet air streams are to be of totally enclosed type.

I. Motors located in outdoor, wet/wash-down locations: Totally enclosed weatherproof epoxy-sealed type. Provide protective covering for electronically commutated motors located in outdoor or wet/wash-down locations.

J. Disconnects: Provided by Division 26, Electrical unless specified otherwise.

K. After completing equipment installation, inspect unit components. Remove paint splatters and other spots, dirt, and debris. Repair damaged finish to match original finish.

3.02 STARTER INSTALLATION

A. Install starters in accordance with manufacturer's instructions.

B. Coordinate disconnect requirements and location with Division 26, Electrical if not integral to starter. If starter is installed out of line of sight of motor, provide additional disconnect at motor per code.

C. Provide NEMA housing appropriate to installation location.

D. Provide supports and install securely, in neat and workmanlike manner, as specified in NECA 1.

E. Meet mounting height and accessible location requirements per local code.

F. Provide fuses for fusible switches.

G. Select and install overload heater elements in motor starters to match installed motor characteristics.

H. Single Phase 120 Volt Starter: If not furnished as single packaged controller/disconnect, provide contactors, relays, wiring and devices necessary to match sequence of operation for equipment.

3.03 SHAFT GROUNDING INSTALLATION

A. Shaft grounding assembly installation not to affect the motor manufacturer warranty. Where the severe environment conditions require application of the shaft grounding types that are screwed into the motor shaft, the installation of the shaft grounding system

performed either by the motor manufacturer or by the motor manufacturer authorized facility.

B. Bond the brush to the closest ground point using code sized green insulated stranded copper conductor per manufacturer instructions.

C. Test and verify the performance of the assembly to ensure that under no conditions the shaft exceeds 3 volts.

D. Install securely on firm foundation. Mount ball bearing motors with shaft in any position.

E. Check line voltage and phase and ensure agreement with nameplate.

F. Verify motor rotation.

3.04 MOTOR INSTALLATION

A. Electrical Service: Power wiring from source to motor termination under Division 26, Electrical.

B. Install in accordance with manufacturer's instructions. Coordinate with starter or variable speed controller with control sequence to provide necessary starter accessories.

C. Install securely on firm foundation. Mount ball bearing motors with shaft in any position.

D. Check line voltage and phase and ensure agreement with nameplate.

E. Verify motor rotation.

F. Field Quality Control:

1. Prepare for acceptance tests as follows:

a. Run each motor with its controller. Demonstrate correct rotation, alignment, and speed at motor design load.

b. Test interlocks and control features for proper operation.

c. Verify that current in each phase is within nameplate rating.

2. Testing: Perform the following field quality-control testing:

a. Perform each electrical test and visual and mechanical inspection stated in NETA ATS, Section 7.15.1. Certify compliance with test parameters.

b. Correct malfunctioning units on-site, where possible, and retest to demonstrate compliance; otherwise, replace with new units and retest.

3. Manufacturer's Field Service: Engage a factory-authorized service representative to perform the following:

a. Inspect field-assembled components, equipment installation, and piping and electrical connections for compliance with requirements.

b. Test and adjust controls and safeties. Replace damaged and malfunctioning controls and equipment.

c. Verify bearing lubrication.

d. Verify proper motor rotation.

e. Test Reports: Prepare a written report to record the following test procedures used:

1) Test results that comply with requirements.

2) Test results that do not comply with requirements and corrective action taken to achieve compliance.

G. Align motors, bases, shafts, pulleys and belts. Tension belts according to manufacturer's written instructions.

H. Clean motors, on completion of installation, according to manufacturer's written instructions.

END OF SECTION

SECTION 23 05 29

HANGERS AND SUPPORTS FOR HVAC PIPING, DUCTWORK AND EQUIPMENT

PART 1 - GENERAL

1.01 SUMMARY

A. Work Included:

1. Hangers and Supports for HVAC Piping, Ductwork and Equipment
2. Wall and Floor Sleeves
3. Building Attachments
4. Flashing
5. Miscellaneous Metal and Materials

1.02 RELATED SECTIONS

A. Contents of Division 23, HVAC and Division 01, General Requirements apply to this Section.

1.03 REFERENCES AND STANDARDS

A. References and Standards as required by Section 23 00 00, HVAC Basic Requirements and Division 01, General Requirements.

B. In addition, meet the following:

1. ASCE 7-16, Minimum Design Loads for Buildings and Other Structures.
2. Terminology: As defined in MSS SP-90 "Guidelines on Terminology for Pipe Hangers and Supports".
3. Install ductwork and piping per SMACNA's requirements.
4. Hanger spacing installation and attachment to meet all manufacturer's requirements and MSS SP-58.

1.04 SUBMITTALS

A. Submittals as required by Section 23 00 00, HVAC Basic Requirements and Division 01, General Requirements.

1.05 QUALITY ASSURANCE

A. Quality assurance as required by Section 23 00 00, HVAC Basic Requirements and Division 01, General Requirements.

B. In addition, meet the following:

1. Welding:

a. Qualify processes and operators according to ASME Boiler and Pressure Vessel Code: Section IX, "Welding and Brazing Qualifications".

2. Welding for Hangers:

a. Qualify procedures and personnel according to AWS D9.1, Sheet Metal Welding Code for duct joint and seam welding.

3. Engineering Responsibility:

a. Design and preparation of Shop Drawings and calculations for each multiple pipe support, trapeze, duct support equipment hangers/supports, support from floor structure, roof structure or from structure above, and seismic restraint by a qualified Structural Professional Engineer.

1) Professional Engineer Qualifications: A professional engineer who is legally qualified to practice in jurisdiction where project is located and who is experienced in providing engineering services of the kind indicated. Engineering services are defined as those performed for installations of hangers and supports that are similar to those indicated for this Project in material, design, and extent.

4. Manufacturers regularly engaged in the manufacture of bolted metal framing support systems, whose products have been in satisfactory use in similar service for not less than 10 years.

5. Support systems to be supplied by a single manufacturer.

1.06 WARRANTY

A. Warranty of materials and workmanship as required by Section 23 00 00, HVAC Basic Requirements and Division 01, General Requirements.

1.07 PERFORMANCE REQUIREMENTS

A. Provide pipe, ductwork and equipment hangers and supports in accordance with the following:

1. When supports, anchorages, and seismic restraints for equipment, and supports, anchorages, and seismic restraints for conduit, piping, and ductwork are not shown on the Drawings, the contractor is responsible for their design.

2. Connections to structural framing not to introduce twisting, torsion, or lateral bending in the framing members. Provide supplementary steel as required.

B. Engineered Support Systems:

1. Support frames such as pipe racks or stanchions for piping, ductwork, and equipment which provide support from below.

2. Equipment, ductwork and piping support frame anchorage to supporting slab or structure.

C. Provide channel support systems, for piping to support multiple pipes capable of supporting combined weight of supported systems, system contents, and test water.

D. Provide heavy-duty steel trapezes for piping to support multiple pipes capable of supporting combined weight of supported systems, system contents, and test water.

E. Provide seismic restraint hangers and supports for piping, ductwork and equipment. See Section 23 05 48, Vibration and Seismic Controls for HVAC Equipment.

F. Obtain approval from AHJ for seismic restraint hanger and support system to be installed for piping and equipment. See Section 23 05 48, Vibration and Seismic Controls for HVAC Equipment.

PART 2 - PRODUCTS

2.01 MANUFACTURERS

A. Hangers and Supports for HVAC Piping, Ductwork and Equipment:

1. Anvil International
2. B-Line Systems, Incorporated
3. Erico Company, Incorporated
4. Nelson-Olsen Incorporated
5. Rilco Manufacturing Company, Incorporated
6. Snappitz Thermal Pipe Shield Manufacturing
7. Unistrut Corporation

B. Wall and Floor Sleeves:

1. Thunderline Corporation “Link Seal”.
2. Or approved equivalent.

C. Building Attachments:

1. Anchor-It
2. Gunnebo Fastening Corporation
3. Hilti Corporation
4. ITW Ramset/Red Head
5. Masterset Fastening Systems, Incorporated

2.02 HANGERS AND SUPPORTS FOR HVAC PIPING, DUCTWORK AND EQUIPMENT

A. Hanger Rods: Hanger rods continuously threaded or threaded ends only in concealed spaces and threaded ends only in exposed spaces; finish electro-galvanized or cadmium-plated in concealed spaces and prime painted in exposed spaces; sizes per MSS.

B. Hanger Rod Couplings: Anvil Figure 136, B-Line Figure B3220, or approved equivalent; malleable iron rod coupling with elongated center sight gap for visual inspection; to have same finish as hanger rods.

C. Channel Hanging System:

1. Framing members No. 12 gauge formed steel channels, 1-5/8-inch square, conforming to ASTM A1011 Grade 33, one side of channel to have a continuous slot within turned lips; framing nut with grooves and spring 1/2-inch size,

conforming to ASTM 675 GR60; screws conforming to ASTM A307; fittings conforming to ASTM A575; parts enamel painted or electro-galvanized.

2. Concrete Inserts: Malleable iron body, hot dipped galvanized finish. Lateral adjustment. MSS Type 18.

D. Continuous Concrete Insert: Steel construction, minimum 12 gauge. Electrogalvanized finish. Pipe clamps and insert nuts to match.

E. Pipe Hangers:

1. Pipe Rings for Hanger Rods:

a. Pipe Sizes 2-inches and Smaller: Adjustable swivel ring hanger, UL listed. Erico 100 or 101, Anvil Figures 69 or 104, or approved equivalent.

b. Pipe Sizes 2-1/2-inches and Larger: Clevis type hangers with adjustable nuts on rod, UL listed. Anvil figure 260, Erico 400, or approved equivalent.

c. Pipe hangers to have same finish as hanger rods.

F. Pipe Saddles and Shields:

1. Factory fabricated saddles or shields under piping hangers and supports for insulated piping.

2. Size saddles and shields for exact fit to mate with pipe insulation. 1/2 round, 18 gauge, minimum 12-inches in length (4-inch pipe and larger to be three times longer than pipe diameter).

G. Riser Clamps: Steel, UL listed. MSS Type 8. Erico 510 or 511. Copper coated; Erico 368.

H. Pipe Slides: Anvil, reinforced Teflon slide material (3/32-inch minimum thickness) bonded to steel; highly finished steel or stainless steel contact surfaces to resists corrosion; 60-80 PSI maximum active contact surface loading; steel parts 3/16-inch minimum thickness; attachment to pipe and framing by welding.

I. Pipe Guides:

1. Furnish and install pipe guides on continuous runs where pipe alignment must be maintained. Minimum two on each side of expansion joints, spaced per manufacturer's recommendations for pipe size. Fasten guides securely to pipe and structure. Contact with chilled water pipe not to permit heat to be transferred in sufficient quantity to cause condensation on any surface.

2. Furnish and install guides approximately four pipe diameters (first guide) and 14 diameters (second guide) away from each end of expansion joints. Guides are not to be used as supports and are in addition to other pipe hangers and supports.

J. Pipe Roller Hangers: Adjustable roller hanger. Black steel yoke, cast iron roller. MSS Type 41.

K. Below Ground Pipe Supports:

1. Pipe Hangers All Sizes: Adjustable Clevis type, Federal Specification WW-H-171 (Type 1), UL listed, stainless steel Type 304. MSS Type 1. Erico 406.

2. Rod: 5/8-inch stainless steel Type 18-8.

3. Eyebolt: Stainless steel Type 18-8.

4. Nuts and Washers: Stainless steel Type 18-8.

L. Thermal Hanger Shield Inserts:

1. 100-PSI (690-kPa) minimum compressive strength calcium silicate insulation, encased in sheet metal shield or polyisocyanurate rigid foam exceeding the load bearing weight of the pipe at the hanger point with a PVC vapor barrier.

2. Material for Cold Piping: Water-repellent-treated, ASTM C533, Type I calcium silicate with vapor barrier or polyisocyanurate rigid foam with a PVC vapor barrier.

3. Material for Hot Piping: Water-repellent-treated ASTM C533, Type 1 calcium silicate or polyisocyanurate rigid foam with a PVC vapor barrier.

4. For Trapeze or Clamped System: Insert and shield cover entire circumference of pipe.

5. For Clevis or Band Hanger: Insert and shield cover lower 180 degrees of pipe.

6. Insert Length: Extend 2-inches beyond sheet metal shield for piping operating below ambient air temperature.

7. Thermal Hanger Shield Insulation Operating Temperature: Meet or exceed fluid temperature in pipe.

M. Freestanding Roof Supports: Polyethylene high-density UV resistant quick "pipe" block with foam pad.

2.03 WALL AND FLOOR SLEEVES

A. Below Grade or High Water Table Areas:

1. "Link-Seal" Pipe Sleeves: Neoprene gasket links bolted together around an interior sleeve forming a watertight seal.

2. Provide Type S unless otherwise noted.

B. Pre-Engineered Firestop Pipe Penetration Systems: UL listed assemblies for maintaining fire rating of piping penetrations through fire-rated assemblies. Comply with ASTM E814.

C. Fabricated Accessories:

1. Steel Pipe Sleeves: Fabricate from Schedule 40 black or galvanized steel pipe. Remove end burrs by grinding.

2. Sheet Metal Pipe Sleeves: Fabricate from G-90 galvanized sheets closed with lock-seam joints. Provide the following minimum gauges for the sizes indicated:

a. Sleeve Size 4-inches in Diameter and Smaller: 18 gauge.

b. Sleeve Sizes 5-6-inches: 16 gauge.

c. Sleeve Sizes 7-inches and Larger: 14 gauge.

d. Fire-Rated Safing Material.

1) Rockwool Insulation: Complying with FS-HH-I-558, Form A, Class IV, 6 pounds per cubic foot density with melting point of 1985 degrees F and K value of 0.24 at 75 degrees F.

2) Calcium Silicate Insulation: Noncombustible, complying with FS-HH-I-523, Type II, suitable for 100 degrees F to 1200 degrees F service with K value of 0.40 at 150 degrees F.

2.04 BUILDING ATTACHMENTS

A. Beam Clamps:

1. MSS Type 19 and 23, wide throat, with retaining clip.

2. Universal Side Beam Clamp: MSS Type 20.

B. Powder-Actuated Drive Pin Fasteners: Powder actuated type, drive pin attachments with pull-out and shear capacities appropriate for supported loads and building materials where used.

C. Anchor Bolts:

1. Anchor supports to existing masonry, block and tile walls per anchoring system manufacturer's recommendations or as modified by project structural engineer. Insert-type attachments with pull-out and shear capacities appropriate for supported loads and building materials where used.

2. Anchor Bolts (Cast-In-Place): Steel bolts, ASTM A307. Nuts to conform to ASTM A194. Design values for shear and tension not more than 80 percent of the allowable listed loads.

3. Anchor (Expansion) Bolts: Carbon steel to ASTM A307; nut to conform to ASTM A194; drilled-in type. Design values for shear and tension not more than 80 percent of the allowable listed loads.

4. Anchor (Adhesive) Bolts: Consisting of two-part adhesive cartridge and zinc-plated Type A307 steel anchor bolt rod assembly with ASTM A194 nut.

2.05 FLASHING

A. Steel Flashing: 26 gauge galvanized steel.

B. Safes: 8 mil thick neoprene.

C. Caps: Steel, 22 gauge minimum, 16 gauge at fire-resistant structures.

2.06 MISCELLANEOUS METAL AND MATERIALS

A. General:

1. Provide miscellaneous supports and metal items, including materials, fabrication, fastenings and accessories required for finished installation, where indicated on drawings or otherwise not shown on drawings that are necessary for completion of the project. Contractor is responsible for their design.

2. Fabricate miscellaneous units to size shapes and profiles indicated or, if not indicated, of required dimensions to receive adjacent other work to be retained

by framing. Except as otherwise shown, fabricate from structural steel shapes and plates and steel bars, of welded construction using mitered joints for field connection. Cut, drill and tap units to receive hardware and similar items.

B. Structural Shapes: Where miscellaneous metal items are needed to be fabricated from structural steel shapes and plates, provide members constructed of steel conforming with requirements of ASTM A36 or approved equivalent.

C. Steel Pipe: Provide seamless steel pipe conforming to requirements of ASTM A53, Type S, Grade A, or Grade B. Weight and size required as specified.

D. Fasteners: Provide fasteners of types as required for assembly and installation of fabricated items; surface-applied fasteners are specified elsewhere.

E. Bolts: Low carbon steel externally and internally threaded fasteners conforming with requirements of ASTM A307; include necessary nuts and plain hardened washers. For structural steel elements supporting mechanical material or equipment from building structural members or connection thereto, use fasteners conforming to ASTM A325.

F. Miscellaneous Materials: Provide incidental accessory materials, tools, methods, and equipment required for fabrication.

G. Provide hot dipped galvanized components for items exposed to weather. Cold galvanize field-welded joints and components. Use materials compatible with system being supported (i.e. aluminum for aluminum ductwork, stainless steel for stainless steel ductwork).

H. Use straps, threshold rods and wire with sizes required by SMACNA to support ductwork.

I. Grout:

1. ASTM C1107, Grade B, factory mixed and packaged, nonshrink and nonmetallic, dry, hydraulic-cement grout.

2. Characteristics: Post hardening and volume adjusting; recommended for both interior and exterior applications.

3. Properties: Nonstaining, noncorrosive, and non gaseous.

4. Design Mix: 5000-PSI (34.5-MPa), 28-day compressive strength.

PART 3 - EXECUTION

3.01 GENERAL INSTALLATION REQUIREMENTS

A. Verify building materials to have hangers and attachments affixed in accordance with hangers to be used. Provide supporting calculations.

B. Examine Drawings and coordinate for verification of exact locations of fire and smoke rated walls, partitions, floors and other assemblies. Indicate, by shading and labeling on Record Drawings such locations and label as "1-Hour Wall", "2-Hour Fire/Smoke Barrier", and the like. Determine proper locations for piping penetrations. Set sleeves in place in new floors, walls or roofs prior to concrete pour or grouting.

C. Install hangers, supports, anchors and sleeves after required building structural work has been completed in areas where the work is to be installed. Coordinate proper placement of inserts, anchors and other building structural attachments.

D. Equipment Clearances: Do not route ductwork, equipment, or piping through electrical rooms, IT rooms, MPOE rooms, or other electrical or electronic equipment spaces and enclosures and the like. Within equipment rooms, provide minimum 3-feet lateral clearance from all sides of electric switchgear panels. Do not route ductwork, equipment, or piping above any electric power or lighting panel, switchgear, or similar electric device. Coordinate with Electrical and coordinate exact ductwork, equipment or pipe routing to provide proper clearance with such items.

3.02 HANGERS AND SUPPORTS FOR HVAC PIPING, DUCTWORK AND EQUIPMENT

A. Hang rectangular sheet-metal ducts with a cross sectional area of less than 7 SF with galvanized strips of No. 16 USS gauge steel 1-inch wide, and larger ducts with steel angles and adjustable hanger rods similar to piping hangers. Support at a maximum of 8-feet on center.

B. Support horizontal ducts within 24-inches of each elbow and within 48-inches of each branch intersection.

C. Design hangers and supports to allow for expansion and contraction.

D. Provide aluminum supports for aluminum ductwork.

E. Provide stainless steel supports for stainless steel ductwork.

F. Support vertical ducts at maximum intervals of 16-feet and at each floor.

G. Install upper attachments to structures with an allowable load not exceeding one-fourth of failure (proof-test) load.

H. Install flexible ductwork per the more stringent of SMACNA HVAC Duct Construction Standards or the following:

1. Support horizontal duct runs at not more than 4 feet intervals.

2. Support vertical risers at not more than 6 feet intervals.

3. Limit sag between support hangers to 1/2-inch per foot of spacing support.

4. Supports shall be rigid and shall be not less than 1.5-inches wide at point of contact with the duct surface.

5. Duct bends shall be not less than 1.5 duct diameter bend radius.

I. Use double nuts and lock washers on threaded rod supports.

J. Floor supports in mechanical rooms to be elevated 1-inch above finish floor and void space filled with masonry grout.

K. Anchor ducts securely to building in such a manner as to prevent transmission of vibration to structure. Do not connect duct hanger straps directly to roof deck. Do not support ducts from other ducts, piping or equipment.

L. Attach strap hangers installed flush with end of sheet-metal duct run to duct with sheet-metal screws.

M. Construct exterior ductwork or ductwork which is otherwise exposed to weather watertight and slope 1/4-inch per foot to avoid standing water.

N. Exposed ductwork hung in clean areas such as sanitary areas, pharmaceutical areas, wash down areas or food process areas to be installed using double end, food grade trapeze hanger rods suitable for use with food grade strut.

O. Channel Support System Installation:

1. Arrange for grouping of parallel runs of piping and support together on field-assembled channel systems.

2. Field assemble and install according to manufacturer's written instructions.

P. Install hangers and supports complete with necessary inserts, bolts, rods, nuts, washers, and other accessories.

Q. Install hangers and supports to allow controlled thermal and seismic movement of piping systems, to permit freedom of movement between pipe anchors, and to facilitate action of expansion joints, expansion loops, expansion bends, and similar units.

R. Load Distribution: Install hangers and supports so that piping live and dead loads and stresses from movement will not be transmitted to connected equipment.

S. Adjust hangers so as to distribute loads equally on attachments. Provide grout under supports to bring piping, ductwork and equipment to proper level and elevations.

T. Prime paint ferrous nongalvanized hangers, accessories, and supplementary steel which are not factory painted.

U. Horizontal Piping Hangers and Supports; Horizontal and Vertical Piping, and Hanger Rod Attachments:

1. Factory fabricated horizontal piping hangers and supports complying with MSS SP-58, to suit piping systems and in accordance with manufacturer's published product information.

2. Use only one type by one manufacturer for each piping service.

3. Select size of hangers and supports to exactly fit pipe size for bare piping, and to exactly fit around piping insulation with saddle or shield for insulated piping.

4. Pipe support spacing (pipe supported in ceiling or floor-supported) to meet latest applicable Code and manufacturer's requirements.

5. Provide copper-plated hangers and supports for uninsulated copper piping systems.

V. Plumber's Tape not permitted as pipe hangers or pipe straps.

W. Comply with MSS SP-58. Install hangers, supports, clamps, and attachments as required to properly support piping from building structure. For horizontally hung grooved-end piping, provide a minimum of 2 hangers per pipe section.

X. Pipe Ring Diameters:

1. Uninsulated and Insulated Pipe, Except Where Oversized Pipe Rings are Specified: Ring inner diameter to suit pipe outer diameter.

2. Insulated Piping Where Oversized Pipe Rings are Specified and Vibration Isolating Sleeves: Ring inner diameter to suit outer diameter of insulation or sleeve.

Y. Oversize Pipe Rings: Provide oversize pipe rings of 2-inch and larger size.

Z. Pipe Support Brackets: Support pipe with pipe slides.

AA. Steel Backing in Walls: Provide steel backing in walls to support fixtures and piping hung from steel stud walls.

BB. Pipe Guides:

1. Install on continuous runs where pipe alignment must be maintained. Minimum two on each side of expansion joints, spaced per manufacturer's recommendations for pipe size. Fasten guides to pipe structure. Contact with chilled water pipe does not permit heat to be transferred in sufficient quantity to cause condensation on any surface.

2. Install approximately four pipe diameters (first guide) and 14 diameters (second guide) away from each end of expansion joints. Do not use as supports. Provide in addition to other required pipe hangers and supports.

CC. Heavy-Duty Steel Trapeze Installation:

1. Arrange for grouping of parallel runs of horizontal piping and support together on field fabricated, heavy-duty trapezes.

2. Pipes of Various Sizes: Support together and space trapezes for smallest pipe size or install intermediate supports for smaller diameter pipes as specified above for individual pipe hangers.

3. Field fabricate from ASTM A 36/A 36M, steel shapes selected for loads being supported. Weld steel according to AWS D-1.1.

DD. Group parallel runs of horizontal piping to be supported together on trapeze-type hangers. Maximum spacings: MSS SP-58.

EE. Where piping of various sizes is to be supported together by trapeze hangers, space hangers for smallest pipe size or install intermediate supports for smaller diameter pipe.

FF. Do not support piping from other piping.

GG. Fire protection piping will be supported independently of other piping.

HH. Prevent electrolysis in support of copper tubing by use of hangers and supports which are copper plated.

II. Pipe Slopes: Install hangers and supports to provide indicated pipe slopes and so maximum pipe deflections allowed by ASME B31.9, "Building Services Piping" is not exceeded.

JJ. Insulated Piping:

1. Attach clamps and spacers to piping.

a. Piping Operating Above Ambient Air Temperature: Clamp may project through insulation.

b. Piping Operating Below Ambient Air Temperature: Use thermal-hanger shield insert with clamp sized to match OD of insert.

2. Do not exceed pipe stress limits according to ASME B31.9.

3. Install MSS SP-58, Type 39 protection saddles, if insulation without vapor barrier is indicated. Fill interior voids with insulation that matches adjoining insulation.

4. Install MSS SP-58, Type 40 protective shields on cold piping with vapor barrier. Shields to span arc of 180 degrees.

5. Option: Thermal-hanger shield inserts may be used. Include steel weight-distribution plate for pipe NPS 4 (DN100) and larger if pipe is installed on rollers.

6. Shield Dimensions for Pipe, not less than the following:

   a. NPS 1/4 to NPS 3-1/2 (DN8 to DN 90): 12-inches long and 0.048-inch thick.

7. Pipes NPS 8 (DN200) and Larger: Include wood inserts.

   a. Insert Material: Length at least as long as protective shield.

8. Thermal-Hanger Shields: Install with insulation same thickness as piping insulation.

KK. Pipe Anchors: Provide anchors to fasten piping which is subject to expansion and contraction, and adjacent to equipment to prevent loading high forces onto the equipment.

LL. Escutcheon Plates: Install around horizontal and vertical piping at visible penetrations through walls, partitions, floors, or ceilings, including penetrations through closets, through below ceiling corridor walls, and through equipment room walls and floors.

3.03 WALL AND FLOOR SLEEVES

A. "Link-Seal" Pipe Sleeves: Install at floor/below grade piping penetrations. Provide manufacturer's sleeve appropriate to seal type for pre-cast penetrations.

B. Fabricated Pipe Sleeves:

1. Provide either steel or sheet metal pipe sleeves accurately centered around pipe routes. Size such that piping and insulation, if any, will have free movement within the sleeve, including allowance for thermal expansion. Sleeve diameter to be determined by local seismic clearance requirements, and by waterproofing requirements.

2. Length: Equal to thickness of construction penetrated, except extend floor sleeves 1-inch above floor finish.

3. Provide temporary support of sleeves during placement in concrete and other work around sleeves. Provide temporary end closures to prevent concrete and other materials from entering pipe sleeves.

4. Seal each end airtight with a resilient nonhardening sealer, UL listed, fire rated ASTM 814.

C. Installation of metallic or plastic piping penetrations through non fire-rated walls and partitions and through smoke-rated walls and partitions:

1. Install fabricated pipe sleeve.

2. After installation of sleeve and piping, tightly pack entire annular void between piping or piping insulation and sleeve identification with specified material.

3. Seal each end airtight with a resilient nonhardening UL listed fire resistant ASTM 814.

D. Piping Penetrations Through Fire-Rated (One to Three Hour) Assemblies:

1. Select and install pre-engineered pipe penetration system in accordance with the UL listing and manufacturer's recommendation.

2. Provide proper sizing when providing sleeves or core-drilled holes to accommodate the penetration. Firestop voids between sleeve or core-drilled hole and pipe passing through to meet the requirements of ASTM E814.

3.04 BUILDING ATTACHMENTS

A. Factory fabricated attachments complying with MSS SP-58, selected to suit building substructure conditions and in accordance manufacturer's published product information.

B. Select size of building attachments to suit hanger rods.

C. Space attachments within maximum piping span length indicated in MSS SP-58.

D. Install building attachments within concrete slabs or attach to structural steel or wood. Install additional building attachments where support is required for additional concentrated loads, including valves, flanges, guides, strainers, expansion joints, and at changes in direction of piping.

E. Attachment to Wood Structure: Anvil side beam bracket Figure 202 for attachment to wooden beam or approved attachment for a wood structure.

F. Install mechanical-anchor fasteners in concrete after concrete is placed and completely cured. Install fasteners according to manufacturer's written instructions.

G. Install concrete inserts before concrete is placed; fasten inserts to forms. Where concrete with compressive strength less than 2500 PSI is indicated, install reinforcing bars through openings at top in inserts.

H. Install powder-actuated drive-pin fasteners in concrete after concrete is placed and completely cured. Use operators that are licensed by powder-actuated tool manufacturer. Install fasteners according to powder-actuated tool manufacturer's operating manual. Test powder-actuated insert attachments with a minimum load of 100 pounds.

I. Do not use powder-actuated concrete fasteners for lightweight aggregate concretes or for slabs less than 4-inches thick.

J. Bolting: Provide bored, drilled or reamed holes for bolting to miscellaneous structural metals, frames or for mounts or supports. Flame cut, punched or hand sawn holes will not be accepted.

K. Anchor Bolts:

1. Install anchor bolts for mechanical equipment, piping and ductwork as required. Tightly fit and clamp base-supported equipment anchor bolts at equipment support points. Provide locknuts where equipment, piping and ductwork are hung.

2. Anchor Bolts (Cast-In-Place): Embed anchor bolts in new cast-in-place concrete to anchor equipment. Install a pipe sleeve around the anchor bolt for adjustment of the top 1/3 of the bolt embedment; sizes and patterns to suit the installation conditions of the equipment to be anchored.

3.05 FLASHING

A. Flash and counterflash where piping, ductwork and equipment passes through weather or waterproofed walls, floors, and roofs.

B. Provide 12-inch minimum height curbs for roof-mounted mechanical equipment. Flash and counter flash with galvanized steel, soldered and waterproofed.

3.06 MISCELLANEOUS METAL AND MATERIALS

A. General: Verify dimensions prior to fabrication. Form metal items to accurate sizes and configurations as indicated on drawings and otherwise required for proper installation; make with lines straight and angles sharp, clean and true; drill, countersink, tap, and otherwise prepare items for connections with work of other trades, as required. Fabricate to detail of structural shapes, plates and bars; weld joints where practicable; provide bolts and other connection devices required. Include anchorages; clip angles, sleeves, anchor plates, and similar devices. Hot dipped galvanize after fabrication items installed in exterior locations. Set accurately in position as required and anchor securely to building construction. Construct items with joints formed for strength and rigidity, accurately machining for proper fit; where exposed to weather, form to exclude water.

B. Finishes:

1. Ferrous Metal: After fabrication, but before erection, clean surfaces by mechanical or chemical methods to remove rust, scale, oil, corrosion, or other substances detrimental to bonding of subsequently applied protective coatings. For metal items exposed to weather or moisture, galvanize in manner to obtain G90 zinc coating in accordance with ASTM A123. Provide other non-galvanized ferrous metal with 1 coat of approved rust-resisting paint primer, in manner to obtain not less than 1.0 mil dry film thickness. Touch-up damaged areas in primer with same material, before installation. Apply zinc coatings and paint primers uniformly and smoothly; leave ready for finish painting as specified elsewhere.

2. Metal in Contact with Concrete, Masonry and Other Dissimilar Materials: Where metal items are to be erected in contact with dissimilar materials, provide contact surfaces with coating of an approved zinc-chromate primer in manner to obtain not less than 1.0 mil dry film thickness, in addition to other coatings specified in these specifications.

3. For Galvanized Surfaces: Clean field welds, bolted connections, and abraded areas and apply galvanizing repair paint to comply with ASTM A780.

C. Coordinate and furnish anchorages, setting drawings, diagrams, templates, instructions, and directions for installation of anchorages, such as concrete inserts, sleeves, anchor bolts and miscellaneous items having integral anchors, which are to be embedded in concrete or masonry construction. Coordinate delivery of such items to project site.

D. Fastening to In-Place Construction: Provide anchorage devices and fasteners where necessary for securing miscellaneous metal fabrications to in-place construction;

including, threaded fasteners for concrete and masonry inserts, toggle bolts, through-bolts, lag bolts, wood screws and other connectors as required. Avoid cutting concrete reinforcing when drilling for inserts. Reference structural drawings and reinforcing shop drawings and determine locations of stirrups prior to drilling into concrete.

E. Cutting, Fitting and Placement: Perform cutting, drilling and fitting required for installation of miscellaneous metal fabrications. Set work accurately in location, alignment and elevation, plumb, level, true and free of rack, measured from established lines and levels. Provide temporary bracing or anchors in formwork for items, which are to be built into concrete masonry or similar construction.

F. Field Welding: Comply with AWS Code for procedures of manual shielded metal-arc welding, appearance and quality of welds made, and methods used in correcting welding work.

G. Setting Loose Plates: Clean concrete and masonry bearing surfaces of any bond reducing materials, and roughen to improve bond to surfaces. Clean bottom surface of bearing plates.

H. Set loose leveling and bearing plates on wedges, or other adjustable devices. After the bearing members have been positioned and plumbed, tighten the anchor bolts. Do not remove wedges or shims, but if protruding, cut-off flush with edge of the bearing plate before packing with grout. Use metallic non-shrink grout in concealed locations where not exposed to moisture; use non-metallic non-shrink grout in exposed locations, unless otherwise indicated.

I. Pack grout solidly between bearing surfaces and plates to ensure that no voids remain.

J. Cut, drill, and fit miscellaneous metal fabrications for heavy-duty steel trapezes and equipment supports.

K. Fit exposed connections together to form hairline joints. Field-weld connections that cannot be shop-welded because of shipping size limitations.

L. Field Welding: Comply with AWS D1.1 procedures for shielded metal arc welding, appearance and quality of welds, and methods used in correcting welding work, and with the following:

1. Use materials and methods that minimize distortion and develop strength and corrosion resistance of base metals.

2. Obtain fusion without undercut or overlap.

3. Remove welding flux immediately.

4. Finish welds at exposed connections so no roughness shows after finishing and contours of welded surfaces match adjacent contours.

M. Provide galvanized components for items exposed to weather.

3.07 FIRE RATED SUPPORTS

A. Provide fire rated support as required by Codes.

END OF SECTION

SECTION 23 05 48

VIBRATION AND SEISMIC CONTROLS FOR HVAC EQUIPMENT

PART 1 - GENERAL

1.01 SUMMARY

A. Work Included:

1. Vibration Isolation
2. Seismic Restraint Devices
3. Factory Finishes
4. Seismic-Bracing/Restraint Devices/Systems for Equipment, Piping and Ductwork

B. General:

1. Vibration isolation for mechanical ductwork, piping and equipment.
2. Seismic restraint for mechanical ductwork, piping and equipment.
3. Seismic Certification for equipment, hangers and systems.
4. Special inspections for systems.

C. Scope of Work:

1. Vibration isolation and seismic restraint of new equipment and systems within project boundary defined in architectural drawings.
2. Vibration isolation and seismic restraint of new equipment and systems in existing buildings to points of connection with existing systems.
3. Provide supplementary structural steel for seismic restraint systems. No hanging from roof deck is permitted on this project, unless specifically allowed by Structural Engineer of Record in writing prior to bid.

1.02 RELATED SECTIONS

A. Contents of Division 23, HVAC and Division 01, General Requirements apply to this Section.

1.03 REFERENCES AND STANDARDS

A. References and Standards as required by Section 23 00 00, HVAC Basic Requirements and Division 01, General Requirements.

1.04 SUBMITTALS

A. Submittals as required by Section 23 00 00, HVAC Basic Requirements and Division 01, General Requirements.

B. In addition, provide:

1. Vibration Isolation:

a. Product Data: Provide catalog data indicating size, type, load and deflection of each isolator; and percent of vibration transmitted based on lowest disturbing frequency of equipment.

b. Shop Drawings: Showing complete details of construction for steel and concrete bases including:

1) Fabrication, including anchorages and attachments to structure and to supported equipment. Include auxiliary motor slides and rails, base weights, equipment static loads, power transmission, component misalignment and cantilever loads.

2) Equipment mounting holes.

3) Dimensions.

4) Size and location of concrete and steel bases and curbs.

5) Isolation selected for each support point.

6) Details of mounting brackets for isolator.

7) Weight distribution for each isolator.

8) Details of seismic snubbers.

9) Code number assigned to each isolator.

c. Design calculations: Provide calculations for selecting vibration isolators and for designing vibration isolation bases.

2. Riser Supports: Include riser diagrams and calculations showing anticipated expansion and contraction at each support point, initial and final loads on building structure, spring deflection changes and seismic loads. Include certification that riser system has been examined for excessive stress and that none will exist.

3. Seismic Restraint:

a. Shop Drawings: Show compliance with requirements of Quality Assurance article of this Section. Shop drawings to be stamped by a professional Structural Engineer licensed in State of Oregon.

b. Calculations: Submit seismic calculations indicating restraint loadings resulting from design seismic forces. Include anchorage details and indicate quantity, diameter and depth of penetration of anchors. Calculations certified by professional Structural Engineer licensed in State of Oregon.

4. Seismic Restraint Details: Detail fabrication and attachment of seismic restraints and snubbers. Show anchorage details and indicate quantity, diameter and depth of penetration of anchors.

5. Submittals for Interlocking Snubbers: Include load deflection curves up to 1/2-inch deflection in x, y and z planes.

6. Welding certificates.

7. Equipment Certification: Provide seismic certification for equipment as noted in Seismic Design Summary or schedules on Drawings.

1.05 QUALITY ASSURANCE

A. Quality assurance as required by Section 23 00 00, HVAC Basic Requirements and Division 01, General Requirements.

B. In addition, meet the following:

1. Vibration Isolation:

   a. Except for packaged equipment with integral isolators, single manufacturer selects and furnishes isolation required.

   b. Deflections indicated on drawings are minimum actual static deflections for specific equipment supported.

   c. Isolator Stability:

      1) Size springs of sufficient diameter to maintain stability of equipment being supported. Spring diameters not less than 0.8 of compressed height at rated load.

      2) Springs have minimum additional travel to solid equal to 50 percent of rated defection.

      3) Springs support 200 percent of rated load, fully compressed, without deformation or failure.

   d. Maximum Allowable Vibration Levels: Peak vibration velocities not exceed 0.08 in/sec. Correct equipment operating at vibration velocities that exceed this criteria.

2. Seismic Restraint:

   a. Code and Standard Requirements:

      1) Seismic restraint of equipment, piping and ductwork to be in accordance with latest enacted version of OSSC Chapter 16.

   b. Confirm Seismic Control requirements in Division 01, General Requirements and Structural documents.

   c. Seismic restraint and anchorage of permanent equipment and associated systems listed below to building structure be designed to resist total design seismic force prescribed in local building code:

      1) Floor- or roof-mounted equipment weighing 400 pounds or greater.

      2) Suspended, wall-mounted or vibration isolated equipment weighing 20 pounds or greater.

      3) In-line duct devices connected to ductwork weighing 75 pounds or greater.

      4) Housekeeping slabs: provide reinforcement and anchorage to building structure.

   d. Where required, seismic sway bracing of suspended duct and piping meet following:

      1) Pipe and duct runs requiring seismic bracing have minimum of two traverse braces and one longitudinal brace. Longitudinal (or traverse) brace at 90 degree change in direction may act as traverse (or longitudinal) brace if located within 2-feet of change in direction.

2) Seismic bracing may not pass through seismic separation joint. Pipe or duct runs that pass through seismic separation joint must be restrained within 5-feet of both sides of separation.

3) Seismic brace assembly spacing not to exceed 40-feet transverse and 80-feet longitudinal.

e. Seismic restraints may be omitted from suspended piping and duct if following conditions are satisfied:

1) For piping or ducts supported by rod hangers 12-inches or less in length from top of duct to bottom of structural support. Top connections to structure have swivel joints, eye bolts, or vibration isolation hangers for entire length of system run.

2) Lateral motion of system will not cause damaging impact with surrounding systems or cause loss of system vertical support.

3) System must be welded steel pipe, brazed copper pipe, sheet metal duct or similar ductile material with ductile connections.

C. Seismic restraints, including anchors to building structure, be designed by registered professional Structural Engineer licensed in State of Oregon. Design includes:

1. Number, size, capacity and location of anchors for floor- or roof-mounted equipment. For curb-mounted equipment, provide design of attachment of both unit to curb and curb to structure.

2. Number, size, capacity and location of seismic restraint devices and anchors for vibration-isolation and suspended equipment. Provide calculations and test data verifying horizontal and vertical ratings of seismic restraint devices.

3. Number, size, capacity and location of braces and anchors for suspended piping and ductwork on as-built plan drawings.

4. Maximum seismic loads to be indicated on drawings at each brace location. Drawings bear stamp and signature of registered professional Structural Engineer who designed layout of braces.

1.06 WARRANTY

A. Warranty of materials and workmanship as required by Section 23 00 00, HVAC Basic Requirements and Division 01, General Requirements.

1.07 EXTRA MATERIALS

A. Furnish extra materials described below that match products installed and that are packaged with protective covering for storage and identified with labels describing contents.

B. Seismic Snubber Units: Furnish replacement neoprene inserts for snubbers.

PART 2 - PRODUCTS

2.01 MANUFACTURERS

A. Vibration Isolation:

1. The VMC Group

2. B-Line Systems, Inc.

3. Kinetics Noise Control, Inc.

4. Mason Industries, Inc.

5. M.W. Saussé - Vibrex

6. Where Mason numbers are specified, equivalent products by listed manufacturers are acceptable.

B. Seismic Restraint Devices:

1. The VMC Group

2. B-Line Systems, Inc.

3. Kinetics Noise Control, Inc.

4. Mason Industries, Inc.

5. M.W. Saussé - Vibrex

6. California Dynamics Corporation

7. Cooper B-Line Tolco

8. Unistrut Diversified Products Co.; Wayne Manufacturing Division.

9. Hilti, Inc.

C. Factory Finishes:

1. Kynar 500 Fluoropolymer Coating

2. Or approved equivalent.

D. Seismic-Bracing/Restraint Devices/Systems for Equipment, Piping and Ductwork:

1. The VMC Group

2. Kinetics Noise Control, Inc.

3. Mason Industries, Inc.

4. Hilti, Inc.

5. Cooper B-Line, Inc.

6. California Dynamics Corporation

7. Unistrut

8. ISAT, Inc.

9. Where Mason numbers are specified, equivalent products by listed manufacturers are acceptable.

2.02 VIBRATION ISOLATION

A. Type 1 - Neoprene Pad: Natural rubber waffle pads, arranged in single or multiple layers, 3/4-inch thick per layer with pattern repeating on 1/2-inch centers; 50 durometer hardness; maximum loading 60 PSI. Minimum 1/4-inch thick steel load distribution plate and 1/16-inch shim plates between layers, factory cut to sizes matching requirements of

supported equipment. Molded bridge with neoprene anchor bolt bushing and flat washer face to prevent metal to metal contact. Number of layers required for equipment scheduled. Mason Type: Super WMH.

B. Type 4a - Restrained Spring Isolators: Freestanding, steel, open-spring isolators with seismic restraint.

1. Housing: Steel with resilient vertical-limit stops (out of contact during normal operation) to prevent spring extension due to wind loads or if weight is removed; factory-drilled baseplate bonded to 1/4-inch thick, natural rubber or bridge bearing neoprene isolator pad attached to baseplate underside; and adjustable equipment mounting and leveling bolt that acts as blocking during installation. Restraining bolts have large rubber grommets to provide cushioning in vertical and horizontal directions. A minimum clearance of 3/8-inch maintained around restraining bolts so as not to interfere with spring action.

2. Outside Spring Diameter: Not less than 80 percent of compressed height of spring at rated load.

3. Minimum Additional Travel: 50 percent of required deflection at rated load.

4. Lateral Stiffness: More than 80 percent of rated vertical stiffness.

5. Overload Capacity: Support 200 percent of rated load, fully compressed, without deformation or failure.

6. Brackets: Manufacturer's standard bracket, utilize height saving brackets to accommodate height restrictions.

7. Mason Type: SLR.

C. Type 5c - Spring Hangers with Vertical-Limit Stop: Combination coil-spring and elastomeric-insert hanger with spring and insert in compression and with a vertical-limit stop.

1. Frame: Steel, fabricated for connection to threaded hanger rods and to allow for a maximum of 15 degrees of angular hanger-rod misalignment from vertical without binding or reducing isolation efficiency.

2. Outside Spring Diameter: Not less than 80 percent of compressed height of spring at rated load.

3. Minimum Additional Travel: 50 percent of required deflection at rated load.

4. Lateral Stiffness: More than 80 percent of rated vertical stiffness.

5. Overload Capacity: Support 200 percent of rated load, fully compressed, without deformation or failure.

6. Elastomeric Element: Molded, oil-resistant rubber or neoprene.

7. Adjustable Vertical Stop: Steel washer with neoprene washer "up-stop" on lower threaded rod.

8. Mason Type: RW30.

D. Type FC-1, Flexible duct connectors. See Specification Section 23 33 00 Air Duct Accessories.

2.03 SEISMIC RESTRAINT DEVICES

A. Resilient Isolation Washers and Bushings: 1-piece, molded, bridge-bearing neoprene complying with AASHTO M 251 and having a durometer of 50, plus or minus 5, with a flat washer face.

B. Seismic Snubbers: Factory fabricated using welded structural-steel shapes and plates, anchor bolts and replaceable resilient isolation washers and bushings. Snubber load rating to match equipment size. Mason Type: Z-1011 or Z-1225.

1. Anchor bolts for attaching to concrete be seismic-rated, drill-in and stud-wedge or female-wedge type.

2. Resilient Isolation Washers and Bushings: 1-piece, molded, bridge-bearing neoprene complying with AASHTO M 251 and having a durometer of 50, plus or minus 5.

C. Restraining Cables: Galvanized steel aircraft cables with end connections made of steel assemblies that swivel to final installation angle and utilize two clamping bolts for cable engagement. Mason Type: SCB.

D. Anchor Bolts: Seismic-rated, drill-in and stud-wedge or female-wedge type. Select anchor bolts with strength required for anchor and as tested according to ASTM E 488/E 488M.

2.04 FACTORY FINISHES

A. Provide manufacturer's standard prime-coat finish ready for field painting. Units mounted outdoors exposed to weather: Epoxy powder coated, with 1000 hour salt spray rating per ASTM B-117. For high levels of corrosion protection utilize:

1. Conform to AAMA 605.2.

2. Apply coating following cleaning and pretreatment.

3. Cleaning: AA-C12C42R1X.

4. Dry system before final finish application.

5. Total Dry Film Thickness: Approximately 1.2 mils, when baked at 450 degrees F for 10 minutes.

B. Finish:

1. Manufacturer's standard paint applied to factory-assembled and factory-tested equipment before shipping.

2. Powder coating on springs and housings.

3. Hardware be electrogalvanized. Hot-dip galvanize metal components for exterior use.

4. Baked enamel for metal components on isolators for interior use.

5. Color-code or otherwise mark vibration isolation and seismic-control devices to indicate capacity range.

2.05 SEISMIC-BRACING/RESTRAINT DEVICES/SYSTEMS FOR EQUIPMENT, PIPING AND DUCTWORK

A. General Requirements for Restraint Components: Rated strengths, features and applications to be as defined in reports by agency acceptable to authorities having jurisdiction.

B. Structural Safety Factor: Allowable strength in tension, shear and pullout force of components be at least four times maximum seismic forces to which they will be subjected.

C. Anchor bolts for attaching to concrete to be seismic-rated, drill-in and stud-wedge or female-wedge type.

D. Resilient Isolation Washers and Bushings: Oil- and water-resistant neoprene.

E. Maximum 1/4-inch air gap and minimum 1/4-inch thick resilient cushion.

PART 3 - EXECUTION

3.01 GENERAL INSTALLATION REQUIREMENTS

A. Set floor-mounted equipment with steel base rails on minimum 4-inch-high concrete housekeeping pads. Extend pad minimum 6-inches beyond footprint of equipment in each direction, but not less than twice the embedment depth of concrete anchors.

B. Provide mounts for equipment installed outdoors for wind loads of 30 lbs. psf applied to any exposed surface of isolated equipment.

C. Do not install equipment or pipe which makes rigid contact with building slabs, beams, studs, walls, etc.

D. Anchor baseplate to floor or structure. Provide rubber grommets and washers to isolate bolt from base plate. Under no circumstances is isolation efficiency to be destroyed when bolting isolators to floor.

E. Building Penetrations: Isolate water piping and ductwork penetrating wall, ceilings, floors or shafts from structure by piping isolator or by 3/8-inch thick foamed rubber insulation. Install units flush with finished structure face, using one for each side as required. Cut units to length if longer than structure thickness. Caulk around pipe or duct at equipment room wall.

F. Provide roof curbs, equipment supports and roof penetrations. Work to maintain roof warranty. Coordinate location, size, structural connections/requirements and flashing prior to installation.

G. Vibration isolators must not cause change of position of equipment or piping which would stress piping connections or misalignment shafts or bearings. Isolated equipment is to be level and in proper alignment with connecting ducts and pipes.

H. Pipe Hangers in Equipment Rooms: Support water and gas piping connected to rotating equipment within equipment rooms on spring and neoprene hangers. The first three hangers from a piece of vibrating equipment are to have a minimum of 1/2 static deflection of equipment isolators. Other isolators should have a minimum of 1/4 static deflection of equipment isolators.

I. Examination:

1. Examine areas and equipment to receive vibration isolation and seismic-control devices for compliance with requirements, installation tolerances and other conditions affecting performance.

2. Examine roughing-in of reinforcement and cast-in-place anchors to verify actual locations before installation.

3. Proceed with installation only after unsatisfactory conditions have been corrected.

J. Testing: Perform following field quality-control testing:

1. Isolator seismic-restraint clearance.

2. Isolator deflection.

3. Snubber minimum clearances.

K. Adjusting:

1. Adjust snubbers according to manufacturer's written recommendations.

2. Torque anchor bolts according to equipment manufacturer's written recommendations to resist seismic forces.

L. Cleaning: After completing equipment installation, inspect vibration isolation and seismic-control devices. Remove paint splatters and other spots, dirt and debris.

M. Demonstration: Engage factory-authorized service representative to train Owner's maintenance personnel to adjust, operate and maintain air-mounting systems. Reference Division 01, General Requirements.

3.02 VIBRATION ISOLATION

A. Reference 3.01, General Installation Requirements.

B. Install per manufacturer's instructions and recommendations.

C. Vibration isolators must be installed in strict accordance with manufacturer's written instructions and certified submittal data.

D. Install isolation as indicated on drawings by type and location and where indicated below.

E. Equipment Vibration Isolation Schedule:

Equipment	Size	Vibration Isolator Type	Minimum Deflection (in)
Fan-coils	All	Type 5C, FC-1	0.75
Condensing Units	0 to 4.5 tons	Type 1	0.3
Condensing Units	5+ tons	Type 4A	2.5
Axial, Cabinet, Centrifugal Inline Fans	0 to 23.5-inch diameter	Type 5C, FC-1	0.75
Axial, Cabinet, Centrifugal Inline Fans	24-inch+ diameter	Type 5C, FC-1	1.5

F. Isolation Mounts:

1. Install minimum of four seismic snubbers on isolated equipment. Locate snubbers as close as possible to vibration isolators and bolt to equipment base and supporting structure.

2. Install resilient bolt isolation washers on equipment anchor bolts.

3. Provide flexible piping connection and flexible ductwork connection to equipment with isolation mounts or bases.

G. Isolating Hangers:

1. Support piping and ductwork connected to isolated equipment within equipment rooms on isolating hangers as scheduled on drawings. Unless otherwise noted, first three hangers from isolated equipment to have a minimum of 1/2 static deflection of equipment isolators. Other isolating hangers to have a minimum of 1/4 static deflection of equipment isolators.

2. Position isolating hanger elements as high as possible in hanger rod assembly, but not in contact with building structure. Install hangers so that hanger housing may rotate full 360 degrees about rod axis without contacting any object.

3. Unless otherwise noted, air supply units with internally isolated fans do not require isolating hangers for connecting pipes and ductwork.

4. Where parallel running pipes are hung together on an isolated trapeze, provide isolator deflections for largest determined by provisions for pipe isolation. Do not mix isolated and non-isolated pipes in same trapeze.

5. Install limit stops so they are out of contact during normal operation.

H. Adjusting:

1. Adjust isolators after piping systems have been filled and equipment is at operating weight.

2. Adjust limit stops on restrained spring isolators to mount equipment at normal operating height. After equipment installation is complete, adjust limit stops so they are out of contact during normal operation.

3. Attach thrust limits at centerline of thrust and adjust to a maximum of 1/4-inch movement during start and stop.

3.03 SEISMIC RESTRAINT DEVICES

A. Reference 3.01, General Installation Requirements.

B. Install in strict accordance with manufacturer's written instructions and certified submittal data.

C. Install and adjust seismic restraints so equipment, piping and ductwork supports are not degraded by restraints.

D. Restraints must not short circuit vibration isolation systems or transmit objectionable vibration or noise.

E. Install restraining cables at each trapeze, individual pipe hanger and hanging vibration isolated equipment. Provide restraining cables in each of the four directions of

movement. Install restraining cables no less than 45 Degrees from vertical. At trapeze anchor locations, shackle piping to trapeze. Install cables so they do not bend across sharp edges of adjacent equipment or building structure.

F. Install steel angles or channel, sized to prevent buckling, clamped with ductile-iron clamps to hanger rods for trapeze and individual pipe hangers. At trapeze anchor locations, shackle piping to trapeze. Requirements apply equally to hanging equipment. Do not weld angles to rods.

3.04 FACTORY FINISHES

A. Reference 3.01, General Installation Requirements.

B. Install per manufacturer's instructions and recommendations.

C. Finishes to be factory-applied. No field patching or holidays allowed.

3.05 SEISMIC-BRACING/RESTRAINT DEVICES/SYSTEMS FOR EQUIPMENT, PIPING AND DUCTWORK

A. Reference 3.01, General Installation Requirements.

B. Install per manufacturer's instructions and recommendations.

C. Adjust seismic restraints to permit free movement of equipment within normal mode of operation.

END OF SECTION

(THIS PAGE LEFT BLANK INTENTIONALLY)

SECTION 23 05 53

IDENTIFICATION FOR HVAC PIPING, DUCTWORK AND EQUIPMENT

PART 1 - GENERAL

1.01 SUMMARY

A. Work Included:

1. Plastic Nameplates
2. Plastic Pipe Markers

1.02 RELATED SECTIONS

A. Contents of Division 23, HVAC and Division 01, General Requirements apply to this Section.

1.03 REFERENCES AND STANDARDS

A. References and Standards as required by Section 23 00 00, HVAC Basic Requirements and Division 01, General Requirements.

1.04 SUBMITTALS

A. Submittals as required by Section 23 00 00, HVAC Basic Requirements and Division 01, General Requirements.

B. In addition, provide:

1. Schedules:

a. Submit valve schedule for each piping system, in tabular format using Microsoft Word or Excel software. Tabulate valve number, piping system, system abbreviation (as shown on tag), location of valve (room or space), and variations for identification (if any). Mark valves which are intended for emergency shutoff and similar special uses by special "flags" in margin of schedule. In addition to mounted copies, furnish extra copies for maintenance manuals.

2. Submit schedule of identification type, including material, for each class of tagged item.

3. Submit locations at which Valve Schedules will be installed.

1.05 QUALITY ASSURANCE

A. Quality assurance as required by Section 23 00 00, HVAC Basic Requirements and Division 01, General Requirements.

B. In addition, meet the following:

1. Manufacturer's Qualifications: Firms regularly engaged in manufacture of identification devices of types and sizes required.

2. Codes and Standards: Comply with ANSI A13.1 for lettering size, length of color field, colors, and viewing angles of identification devices unless otherwise indicated.

1.06 WARRANTY

A. Warranty of materials and workmanship as required by Section 23 00 00, HVAC Basic Requirements and Division 01, General Requirements.

PART 2 - PRODUCTS

2.01 PLASTIC NAMEPLATES

A. Manufacturers:

1. Brady Corporation
2. Brimar
3. Champion America
4. Craftmark
5. Seton

B. Description: Engraving stock melamine plastic laminate in the size and thicknesses indicated, engraved with engraver's standard letter style of the sizes and wording indicated, black with white core (letter color), punched for mechanical fastening except where adhesive mounting is necessary because of substrate. Provide 1/8-inch thick material.

1. Letter Color: White.
2. Letter Height: 1/2-inch.
3. Background Color: Black.
4. Fasteners: Self-tapping stainless steel screws, except contact-type permanent adhesive where screws cannot or should not penetrate the substrate.
5. Access Panel Markers: Manufacturer's standard 1/16-inch thick engraved plastic laminate access panel markers, with abbreviations and numbers corresponding to concealed valve or devices/equipment. Include center hole to allow attachment.

2.02 PLASTIC PIPE MARKERS

A. Manufacturers:

1. Brady Corporation
2. Brimar
3. Champion America
4. Craftmark
5. Seton

B. Color: Conform to ASME A13.1 and ANSI Z535.1.

C. Plastic Pipe Markers (for external diameters of 6-inches and larger including insulation): Factory fabricated, flexible, semi- rigid plastic, preformed to fit around pipe or pipe covering; minimum information indicating flow direction arrow and identification of fluid being conveyed.

D. Plastic Tape Pipe Markers (for external diameters less than 6-inches including insulation): Flexible, vinyl film tape with pressure sensitive adhesive backing and printed markings. Minimum information indicating flow direction arrow and identification of fluid being conveyed.

E. Lettering:

1. 3/4-inch to 1-1/4-inch Outside Diameter of Insulation or Pipe: 8-inch long color field, 1/2-inch high letters.

2. 1-1/2-inch to 2-inch Outside Diameter of Insulation or Pipe: 8-inch long color field, 3/4-inch high letters.

3. 2-1/2-inch to 6-inch Outside Diameter of Insulation or Pipe: 12-inch long color field, 1-1/4-inch high letters.

4. 8-inch to 10-inch Outside Diameter of Insulation or Pipe: 24-inch long color field, 2-1/2-inch high letters.

5. Over 10-inch Outside Diameter of Insulation or Pipe: 32-inch long color field, 3-1/2-inch high letters.

PART 3 - EXECUTION

3.01 GENERAL - INSTALLATION

A. Identify air handling units, pumps, heat transfer equipment, tanks, and water treatment devices with plastic nameplates riveted to equipment body.

B. Identify piping, concealed or exposed, with plastic pipe markers.

C. Coordinate names, abbreviations and other designations used in mechanical identification work with corresponding designations shown, specified or scheduled. Provide numbers, lettering and wording as indicated or, if not otherwise indicated, as recommended by manufacturers or as required for proper identification and operation/maintenance of mechanical systems and equipment.

D. Multiple Systems: Where multiple systems of same generic name are shown and specified, provide identification which indicates individual system number as well as service (as examples: Chiller No. 3, Air Handling Unit No. 42, Standpipe F12, and the like).

E. Degrease and clean surfaces to receive adhesive for identification materials.

F. Coordination: Where identification is to be applied to surfaces which require insulation, painting or other covering or finish, including valve tags in finished mechanical spaces, install identification after completion of covering and painting. Install identification prior to installation of acoustical ceilings and similar removable concealment.

G. Install all products in accordance with manufacturer's instructions.

H. Manual Balancing Dampers: Provide 12-inch long orange marker ribbon to end of balancing damper handle.

3.02 PLASTIC NAMEPLATES

A. Install plastic nameplates with corrosive-resistant mechanical fasteners.

B. Identify control panels and major control components outside panels with plastic nameplates riveted to equipment body.

C. Identify thermostats with nameplates.

3.03 PLASTIC PIPE MARKERS

A. Install plastic pipe markers complete around pipe in accordance with manufacturer's instructions.

B. Identify service, flow direction, and pressure. Install in clear view and align with axis of piping. Locate identification not to exceed 20-feet (reduced to 10-feet in congested areas and mechanical equipment rooms) on straight runs including risers and drops, adjacent to each valve and Tee, at each side of penetration of structure or enclosure, and at each obstruction. Locate near branches, valves, control devices, equipment connections, access doors, floor/wall penetrations.

END OF SECTION

SECTION 23 05 93

TESTING, ADJUSTING, AND BALANCING FOR HVAC

PART 1 - GENERAL

1.01 SUMMARY

A. Work Included:

1. General Requirements and Procedures
2. Fundamental Air Systems Balancing Procedures
3. Constant Volume Air Systems Balancing Procedures
4. Final Reports:
   a. Report Requirements
   b. General Report Data
   c. System Diagrams
   d. Air Handling Units
   e. Fans
   f. Duct Traverses
   g. Diffusers/Registers/Grilles
   h. Instrument Calibration
5. Additional Tests

1.02 RELATED SECTIONS

A. Contents of Division 23, HVAC and Division 01, General Requirements apply to this Section.

1.03 REFERENCES AND STANDARDS

A. References and Standards as required by Section 23 00 00, HVAC Basic Requirements and Division 01, General Requirements.

1.04 SUBMITTALS

A. Submittals as required by Section 23 00 00, HVAC Basic Requirements and Division 01, General Requirements.

B. In addition, provide:

1. Quality-Assurance Submittals: Submit two copies of evidence that the Testing, Adjusting, and Balancing (TAB) Agent and Project's TAB team members meet the qualifications specified in the "Quality Assurance" Article below.
2. Pre-Construction Phase Report:
   a. Provide a pre-construction phase TAB Plan at least two weeks prior to the commencement of TAB work. This report is to include:

1) A complete set of report forms intended for use on the Project, with data filled in except for the field readings. Forms to be Project-specific.

2) Marked up shop drawings identifying all HVAC equipment to be balanced, and associated outlets and terminal devices.

3) Identification of the type, manufacturer, and model of the actual instruments to be used, and clear indication of which instrument will be used to take each type of reading. Calibration certifications to be included.

4) A narrative of Project-specific and/or non-standard TAB procedures to be used, and the equipment or systems to which they apply.

3. Contract Documents Examination Report: Within 45 days from the Contractor's Notice to Proceed, submit two copies of the Contract Documents review report as specified in Part 3 of this Section.

4. Strategies and Procedures Plan: Submit two copies of the TAB strategies and step-by-step procedures as specified in Part 3 of this Section. Include a complete set of report forms intended for use on this Project.

5. Specify reports required because of editing procedures in Part 3 of this Section.

6. Certified TAB Reports: Submit two copies of reports prepared, as specified in this Section, on approved forms certified by the TAB Agent.

7. Sample Report Forms: Submit two sets of sample TAB report forms.

8. Test Instrument Calibration: Submit proof of calibration within the last 6 months.

9. Final Report.

10. Provide additional submittals to commissioning authority as dictated in Commissioning Specifications.

1.05 QUALITY ASSURANCE

A. Quality Assurance as required by Section 23 00 00, HVAC Basic Requirements and Division 01, General Requirements.

B. In addition, meet the following:

1. Acceptable TAB Agencies:

a. Oregon:

1) Air Introduction and Regulations Inc.

2) Accurate Air Balance, Inc.

3) Neudorfer Engineers

4) Northwest Engineering Services

5) Air Balancing Specialty Inc.

6) Precision Test & Balance, Inc.

7) Testcomm

8) American Commissioning and LEED Consultants, Inc.

2. Balance Firm Qualifications:

   a. General:

      1) Procure services of independent TAB agency to balance, adjust and test water circulating and air moving equipment and air distribution or exhaust systems. Minimum experience: 5 years.

      2) Provide proof of testing agency having successfully completed at least five projects of similar size and scope.

   b. Testing and Balancing firm is certified by NEBB or AABC and has a NEBB Certified Professional (CP) or a AABC Test and Balancer Engineer (TBE) on staff.

   c. Industry Standards: Testing and Balancing will conform to NEBB or AABC, and American National Standards Institute (ANSI) as follows:

      1) NEBB: Comply with Procedural Standards for Testing, Adjusting, and Balancing of Environmental Systems.

      2) AABC: Comply with National Standards for Total System Balance.

      3) ANSI:

         a) S1.4 Specifications for sound level meters.

         b) S1.11 Specifications for Octave-Band and Fractional-Octave-Band analog and digital filters.

         c) ANSI S1.13 Methods for the Measurement of Sound Pressure Levels.

   d. Test Observation: If requested, conduct tests in the presence of the Commissioning Authority, AHJ, Architect or the Architect's representative.

3. Code Compliance: Perform tests in the presence of the Authority Having Jurisdiction (AHJ) where required by the Authority Having Jurisdiction (AHJ).

4. Owner Witness: Perform tests in the presence of the Commissioning Authority, Architect, Architect's Representative, or Owner's representative.

5. Engineer Witness: The engineer or engineer's representative reserves the right to observe tests or selected tests to assure compliance with the specifications.

6. Simultaneous Testing: Test observations by the AHJ, the Owner's Authorized Representative and the engineer's representative need not occur simultaneously.

7. Do not perform TAB work until heating, ventilating, and air conditioning equipment has been completely installed and is operating continuously as required.

8. Conduct air testing and balancing with clean filters in place. Clean strainers prior to performing hydronic testing and balancing.

9. TAB Conference: Meet with the Commissioning Authority, Owner's and the Architect's representatives on approval of the TAB strategies and procedures plan to develop a mutual understanding of the details. Ensure the participation of TAB team members, equipment manufacturers' authorized service representatives,

HVAC controls Installer, and other support personnel. Provide 7 days advance notice of scheduled meeting time and location.

a. Agenda Items: Include at least the following:

1) Submittal distribution requirements.

2) Contract Documents examination report.

3) TAB plan.

4) Work schedule and Project site access requirements.

5) Coordination and cooperation of trades and subcontractors.

6) Coordination of documentation and communication flow.

10. Certification of TAB Reports: This certification includes the following:

a. Review field data reports to validate accuracy of data and to prepare certified TAB reports.

b. Certify that the TAB team complied with the approved TAB plan and the procedures specified and referenced in this Specification.

11. TAB Reports: Use standard forms from NEBB or AABC.

12. Instrumentation Type, Quantity, and Accuracy: As described in NEBB or AABC.

13. Instrumentation Calibration: Calibrate instruments at least every 6 months or more frequently if required by the instrument manufacturer.

1.06 WARRANTY

A. Warranty of materials and workmanship as required by Section 23 00 00, HVAC Basic Requirements and Division 01, General Requirements.

B. In addition, provide:

1. TAB Agency provides warranty for a period of 90 days following submission of completed report, during which time, Owner may request a recheck of up to 10 percent of total number of terminals, or resetting of outlet, coil, or device listed in the final TAB report.

2. Guarantee: Meet the requirements of the following programs:

a. Provide a guarantee on NEBB or AABC forms stating that the agency will assist in completing the requirements of the Contract Documents if the TAB Agent fails to comply with the Contract Documents. Guarantee includes the following provisions:

1) The certified Agent has tested, adjusted, and balanced systems according to the Contract Documents.

2) Systems are balanced to optimum performance capabilities within design and installation limits.

1.07 DEFINITIONS

A. Adjust: To regulate fluid flow rate and air patterns at the terminal equipment, such as to reduce fan speed or adjust a damper.

B. Balance: To proportion flows within the distribution system, including submains, branches, and terminals, according to design quantities.

C. Draft: A current of air, when referring to localized effect caused by one or more factors of high air velocity, low ambient temperature, or direction of airflow, whereby more heat is withdrawn from a person's skin than is normally dissipated.

D. Procedure: An approach to and execution of a sequence of work operations to yield repeatable results.

E. Report Forms: Test data sheets for recording test data in logical order.

F. Static Head: The pressure due to the weight of the fluid above the point of measurement. In a closed system, static head is equal on both sides of the pump.

G. Suction Head: The height of fluid surface above the centerline of the pump on the suction side.

H. System Effect: A phenomenon that can create undesired or unpredicted conditions that cause reduced capacities in all or part of a system.

I. System Effect Factors: Allowances used to calculate a reduction of the performance ratings of a fan when installed under conditions different from those presented when the fan was performance tested.

J. TAB: Testing, Adjusting, and Balancing.

K. Terminal: A point where the controlled medium, such as fluid or energy, enters or leaves the distribution system.

L. Test: A procedure to determine quantitative performance of a system or equipment.

M. Testing, Adjusting, and Balancing (TAB) Agent: The entity responsible for performing and reporting the TAB procedures.

N. AABC: Associated Air Balance Council.

O. NEBB: National Environmental Balancing Bureau.

P. AMCA: Air Movement and Control Association.

Q. CTI: Cooling Tower Institute.

R. SMACNA: Sheet Metal and Air Conditioning Contractors' National Association.

1.08 COORDINATION

A. Coordinate the efforts of factory-authorized service representatives for systems and equipment, HVAC controls installers, and other mechanics to operate HVAC systems and equipment to support and assist TAB activities.

B. Notice: Provide 7 days advance notice for each test. Include scheduled test dates and times.

C. Witness leakage and pressure tests carried out by Section 23 31 00, HVAC Ducts and Casings.

D. Perform TAB after leakage and pressure tests on air and water distribution systems have been satisfactorily completed.

PART 2 - PRODUCTS - NOT USED

PART 3 - EXECUTION

3.01 GENERAL REQUIREMENTS AND PROCEDURES

A. Project Conditions:

1. Non-Owner Occupancy: Complete balancing of building systems prior to Substantial Completion and owner occupancy.

B. General Requirements:

1. Where HVAC systems and/or components interface with life safety systems, including fire and smoke detection, alarm, and controls, coordinate scheduling and testing and inspection procedures with authorities having jurisdiction.

2. Perform TAB work with doors, closed windows, and ceilings installed etc., to obtain simulated or project operating conditions. Do not proceed until systems scheduled for TAB are clean and free from debris, dirt and discarded building materials.

3. Where Owner occupies building during the testing period, cooperate with Owner to minimize conflicts with Owner's operations.

C. Examination:

1. Examine Contract Documents to become familiar with project requirements and existing building record documents (if available) to discover conditions in systems' designs that may preclude proper TAB of systems and equipment.

a. Contract Documents are defined in the General and Supplementary Conditions of the Contract.

b. Verify that balancing devices, such as test ports, gauge cocks, thermometer wells, flow-control devices, balancing valves and fittings, and manual volume dampers, are required by the Contract Documents. Verify that quantities and locations of these balancing devices are accessible and appropriate for effective balancing and for efficient system and equipment operation.

2. Examine approved submittal data of HVAC systems and equipment.

3. Examine Project record documents described in Division 01, General Requirements.

4. Examine Architect's and Engineer's design data, including Basis of Design, HVAC system descriptions, statements of design assumptions for environmental conditions and systems' output, and statements of philosophies and assumptions about HVAC system and equipment controls.

5. Examine equipment performance data, including fan and pump curves. Relate performance data to Project conditions and requirements, including system effects that can create undesired or unpredicted conditions that cause reduced capacities in all or part of a system. Calculate system effect factors to reduce the performance ratings of HVAC equipment when installed under conditions different from those presented when the equipment was performance tested at

the factory. To calculate system effects for air systems, use tables and charts found in AMCA 201, "Fans and Systems," Sections 7 through 10; or in SMACNA's "HVAC Systems--Duct Design," Sections 5 and 6. Compare this data with the design data and installed conditions.

6. Coordinate requirements in system and equipment with this Section.

7. Examine system and equipment installations to verify that they are complete and that testing, cleaning, adjusting, and commissioning specified in individual Specification Sections have been performed.

8. Examine system and equipment test reports.

9. Examine HVAC system and equipment installations to verify that indicated balancing devices, such as test ports, gauge cocks, thermometer wells, flow-control devices, balancing valves and fittings, and manual volume dampers, are properly installed, and their locations are accessible and appropriate for effective balancing and for efficient system and equipment operation.

10. Examine systems for functional deficiencies that cannot be corrected by adjusting and balancing.

11. Examine equipment for installation and for properly operating safety interlocks and controls.

12. Report deficiencies discovered before and during performance of TAB procedures.

D. Preparation:

1. Prepare a TAB plan that includes strategies and step-by-step procedures.

2. Complete system readiness checks and prepare system readiness reports. Verify the following:

   a. Permanent electrical power wiring is complete.

   b. Hydronic systems are filled, clean, and free of air.

   c. Automatic temperature-control systems are operational.

   d. Equipment and duct access doors are securely closed.

   e. Balance, smoke, and fire dampers are open.

   f. Isolating and balancing valves are open and control valves are operational.

   g. Ceilings are installed in critical areas where air-pattern adjustments are required and access to balancing devices is provided.

   h. Windows, doors and other portions of the building envelope can be closed so design conditions for system operations can be met.

3. Hold a pre-balancing meeting at least one week prior to starting TAB work.

   a. Attendance is required by installers whose work will be tested, adjusted, or balanced.

4. Provide instruments required for TAB operations. Make instruments available to Architect to facilitate spot checks during testing.

E. General TAB Procedures:

1. Perform TAB procedures on each system according to the procedures contained in NEBB or AABC and this Section.

2. Coordinate location of test probes prior to start of TAB procedures and make test probes available for Owner's tests after start of occupancy. Where required, cut insulation, ducts, pipes, and equipment cabinets for installation of test probes to the minimum extent necessary to allow adequate performance of procedures. After testing and balancing, close probe holes and patch insulation with new materials identical to those removed. Restore vapor barrier and finish according to the insulation Specifications for this Project.

3. Mark equipment settings with paint or other suitable, permanent identification material, including damper-control positions, valve indicators, fan-speed-control levers, and similar controls and devices, to show final settings.

F. Adjustment Tolerances:

1. Air Handling Systems: Adjust to within plus or minus 5 percent of design for supply systems and plus or minus 5 percent of design for return and exhaust systems.

2. Air Outlets and Inlets: Adjust total to within plus 10 percent and minus 5 percent of design. Adjust outlets and inlets in space to within plus or minus 10 percent of design.

3. Hydronic Systems: Adjust to within plus or minus 10 percent of design at coils and plus or minus 5 percent at system pumps and equipment.

4. Adjust supply, return, and exhaust air quantities to maintain pressurization in spaces indicated on Drawings. Note and document room-to-room pressurization and maintain these relationships. Adjust pressure controlled spaces to within plus or minus 0.01 in WC.

G. Recording and Adjusting:

1. Field Logs: Maintain written logs including:

   a. Running log of events and issues.

   b. Discrepancies, deficient or uncompleted work by others.

   c. Contract interpretation requests.

   d. Lists of completed tests.

2. Ensure recorded data represents actual measured or observed conditions.

3. Permanently mark settings of valves, dampers, and other adjustment devices allowing settings to be restored. Set and lock memory stops.

4. Mark on drawings locations where traverse and other critical measurements were taken and cross reference location in final report.

5. After adjustment, take measurements to verify balance has not been disrupted or that such disruption has been rectified.

6. Leave systems in proper working order, replacing belt guards, closing access doors, closing doors to electrical switch boxes, and restoring thermostats to specified settings.

7. At final inspection, recheck random selections of data recorded in report. Recheck points or areas as selected and witnessed by Owner's Authorized Representative, or Commissioning Agent.

3.02 FUNDAMENTAL AIR SYSTEMS BALANCING PROCEDURES

A. Examine air-handling equipment to ensure clean filters have been installed, bearings are greased, belts are aligned and tight, and equipment with functioning controls is ready for operation.

B. Examine terminal units, such as variable-air-volume boxes and mixing boxes, to verify that they are accessible and their controls are connected and functioning.

C. Examine heat-transfer coils for correct piping connections and for clean and straight fins.

D. Prepare test reports for both fans and inlets and outlets. Obtain manufacturer's outlet factors and recommended testing procedures. Cross check the summation of required outlet volumes with required fan volumes.

E. Prepare schematic diagrams of systems' "as-built" duct layouts.

F. Determine the best locations in main and branch ducts for accurate duct airflow measurements.

G. Check the airflow patterns from the outside-air louvers and dampers and the return-air and exhaust-air dampers, through the supply-fan discharge and mixing dampers.

H. Locate start-stop and disconnect switches, electrical interlocks, and motor starters.

I. Verify that motor starters are equipped with thermal protection, sized for the connected load.

J. Check dampers for proper position to achieve desired airflow path.

K. Check for airflow blockages.

L. Check that condensate drains are installed, trapped and primed and routed to drain.

M. Check for readily observable leaks in air-handling unit components and ductwork.

N. Use sheaves and pulleys to adjust the speed of belt drive fans to achieve design flow with motors running at 60 Hertz unless noted otherwise.

3.03 CONSTANT VOLUME AIR SYSTEMS BALANCING PROCEDURES

A. Adjust fans to deliver total design airflows within the maximum allowable rpm listed by the fan manufacturer. Adjust fans to deliver design airflow at the lowest possible speed.

1. Measure fan static pressures to determine actual static pressure as follows:

a. Measure outlet static pressure as far downstream from the fan as practicable and upstream from restrictions in ducts such as elbows and transitions.

b. Measure static pressure directly at the fan outlet or through the flexible connection.

c. Measure inlet static pressure of single-inlet fans in the inlet duct as near the fan as possible, upstream from flexible connection and downstream from duct restrictions.

d. Measure inlet static pressure of double-inlet fans through the wall of the plenum that houses the fan.

2. Measure static pressure across each air-handling unit component under final balanced condition.

3. Compare design data with installed conditions to determine variations in design static pressures versus actual static pressures. Recommend corrective action to align design and actual conditions.

4. Make required adjustments to pulley sizes, motor sizes, and electrical connections to accommodate fan-speed changes.

5. Do not make fan-speed adjustments that result in motor loading greater than full load amps. Do not increase fan speed beyond fan class rating. Modulate dampers and measure fan-motor amperage to ensure no overload will occur. Measure amperage in full cooling, full heating, and economizer modes to determine the maximum required brake horsepower.

6. Adjust volume dampers for main duct, submain ducts, and major branch ducts to design airflows within specified tolerances.

7. Calibrate airflow measuring stations.

3.04 FINAL REPORTS

A. Report Requirements:

1. General:

a. Computer generated in PDF format and tabulated, divided, and bookmarked into sections by tested and balanced systems.

b. Include a certification sheet in front of binder signed and sealed by the certified TAB engineer.

1) Include a list of the instruments used for procedures, along with proof of calibration.

c. Final Report Contents: In addition to the certified field report data, include the following:

1) Pump curves

2) Fan Curves

3) Manufacturers Test Data

4) Field test reports prepared by system and equipment installers

5) Other information relative to equipment performance, but do not include approved Shop Drawings and Product Data

B. General Report Data:

1. In addition to the form titles and entries, include the following data in the final report, as applicable:

   a. Title Page
   b. Name and Address of TAB Agent
   c. Project Name
   d. Project Location
   e. Architect's Name and Address
   f. Engineer's Name and Address
   g. Contractor's Name and Address
   h. Report Date
   i. Signature of TAB Agent who Certifies the Report
   j. Summary of Contents, Including the Following:
      1) Design versus Final Performance
      2) Notable Characteristics of Systems
      3) Description of System Operation Sequence if it varies from the Contract Documents
   k. Nomenclature Sheets for Each Item of Equipment
   l. Data for Terminal Units, including Manufacturer, Type Size, and Fittings
   m. Notes to explain why certain final data in the body of reports vary from design values.
   n. Test Conditions for Fans and Pump Performance Forms, Including the Following:
      1) Settings for Outside-, Return-, and Exhaust-air Dampers
      2) Conditions of Filters
      3) Cooling Coil, Wet- and Dry-bulb Conditions
      4) Face and Bypass Damper Settings at Coils
      5) Fan Drive Settings, including Settings and Percentage of Maximum Pitch Diameter
      6) Inlet Vane Settings for Variable-Air-Volume Systems
      7) Settings for Supply-air, Static-pressure Controller
      8) Other System Operating Conditions that affect Performance

C. System Diagrams:

1. Include schematic layouts of air and hydronic distribution systems. Present with single-line diagrams and include the following:

   a. Quantities of Outside, Supply, Return, and Exhaust Airflows
   b. Water and Steam Flow Rates
   c. Duct, Outlet, and Inlet Sizes
   d. Pipe and Valve Sizes and Locations

e. Terminal Units

f. Balancing Stations

D. Air Handling Units:

1. For air-handling units, split systems, fan coils, pumps, and evaporator units with coils, include the following:

a. Unit Data: Include the following:

1) Unit Identification

2) Location

3) Make and Type

4) Model Number and Unit Size

5) Manufacturer's Serial Number

6) Unit Arrangement and Class

7) Discharge Arrangement

8) Sheave Make, Size in inches, and Bore

9) Sheave Dimensions, Center-to-center and Amount of Adjustments in Inches

10) Number of Belts, Make, and Size

11) Number of Filters, Type, and Size

b. Motor Data: Include the following:

1) Make and Frame Type and Size

2) Horsepower and rpm

3) Volts, Phase, and Hertz

4) Full-load Amperage and Service Factor

5) Sheave Make, Size in Inches, and Bore

6) Sheave Dimensions, Center-to-center and Amount of Adjustments in Inches

c. Test Data: Include design and actual values for the following:

1) Total Airflow Rate in cfm (L/s)

2) Total System Static Pressure in Inches wg (Pa)

3) Fan rpm

4) Discharge Static Pressure in Inches wg (Pa)

5) Filter Static-pressure Differential in Inches wg (Pa)

6) Preheat Coil Static-pressure Differential in Inches wg (Pa)

7) Cooling Coil Static-pressure Differential in Inches wg (Pa)

8) Heating Coil Static-pressure Differential in Inches wg (Pa)

9) Outside Airflow in cfm (L/s)

10) Return Airflow in cfm (L/s)

11) Outside-air Damper Position

12) Return-air Damper Position

13) Vortex Damper Position

E. Fans:

1. Fan Test Reports: For supply, return, and exhaust fans, include the following:

a. Fan Data: Include the following:

1) System Identification
2) Location
3) Make and Type
4) Model Number and Size
5) Manufacturer's Serial Number
6) Arrangement and Class
7) Sheave Make, Size in Inches, and Bore
8) Sheave Dimensions, Center-to-center and Amount of Adjustments in Inches

b. Motor Data: Include the following:

1) Make and Frame Type and Size
2) Horsepower and rpm
3) Volts, Phase, and Hertz
4) Full-load Amperage and Service Factor
5) Sheave Make, Size in Inches, and Bore
6) Sheave Dimensions, Center-to-center and Amount of Adjustments in Inches
7) Number of Belts, Make, and Size

c. Test Data: Include design and actual values for the following:

1) Total Airflow Rate in cfm
2) Total System Static Pressure in Inches wg
3) Fan rpm
4) Discharge Static Pressure in Inches wg
5) Suction Static Pressure in Inches wg

F. Duct Traverses:

1. Include a diagram with a grid representing the duct cross-section and record the following:

a. Report Data: Include the following:

1) System and Air-handling Unit Number
2) Location and Zone
3) Duct Static Pressure in Inches wg
4) Duct Size in Inches
5) Duct Area in SF
6) Design Airflow Rate in cfm
7) Design Velocity in fpm

8) Actual Airflow Rate in cfm

9) Actual Average Velocity in fpm

G. Diffusers/Registers/Grilles:

1. For diffusers, registers and grilles, include the following:

a. Unit Data: Include the following:

1) System and Air-handling Unit Identification

2) Location and Zone

3) Test Apparatus Used

4) Area Served

5) Air-terminal-device Make

6) Air-terminal-device Number from System Diagram

7) Air-terminal-device Type and Model Number

8) Air-terminal-device Size

9) Air-terminal-device Effective Area in SF

b. Test Data: Include design and actual values for the following:

1) Airflow Rate in cfm

2) Air Velocity in fpm

3) Final Airflow Rate in cfm

4) Final Velocity in fpm

5) Space Temperature in Degrees F

H. Instrument Calibration:

1. For instrument calibration, include the following:

a. Report Data: Include the following:

1) Instrument Type and Make

2) Serial Number

3) Application

4) Dates of Use

b. Dates of Calibration

3.05 ADDITIONAL TESTS

A. Within 90 days of completing TAB, perform additional testing and balancing to verify that balanced conditions are being maintained throughout and to correct unusual conditions.

B. Seasonal Periods: If initial TAB procedures were not performed during near-peak summer and winter conditions, perform additional inspections, testing, and adjusting during near-peak summer and winter conditions.

END OF SECTION

SECTION 23 07 00

HVAC INSULATION

PART 1 - GENERAL

1.01 SUMMARY

A. Work Included:

1. Type A, Flexible Glass Wool Blanket
2. Type B, Duct Liner
3. Type 2, Flexible Elastomeric Pipe Insulation
4. Accessories
5. Duct Insulation Accessories
6. Duct Insulation Compounds

1.02 RELATED SECTIONS

A. Contents of Division 23, HVAC and Division 01, General Requirements apply to this Section.

1.03 REFERENCES AND STANDARDS

A. References and Standards as required by Section 23 00 00, HVAC Basic Requirements and Division 01, General Requirements.

B. In addition, meet the following:

1. Piping and duct insulation products to contain less than 0.1 percent by weight PBDE in all insulating materials.

1.04 SUBMITTALS

A. Submittals as required by Section 23 00 00, HVAC Basic Requirements and Division 01, General Requirements.

B. In addition, provide:

1. Installer qualifications.
2. Product Data: Identify thermal conductivity, thickness, and jackets (both factory and field applied, if any) for each type of product indicated.
3. Material Test Reports: From a qualified testing agency acceptable to authorities having jurisdiction indicating, interpreting, and certifying test results for compliance of insulation materials, sealers, attachments, cements, and jackets with requirements indicated. Include dates of tests.
4. Installer Certificates: Signed by the Contractor certifying that installers comply with requirements.
5. Submit manufacturer's installation instructions.

1.05 QUALITY ASSURANCE

A. Quality assurance as required by Section 23 00 00, HVAC Basic Requirements and Division 01, General Requirements.

B. In addition, meet the following:

1. Formaldehyde Free: Should be third-party certified with UL Environment Validation.

2. Recycled Content: A minimum of 40 percent post-consumer recycled glass content certified and UL validated.

3. Low Emitting Materials: For all thermal and acoustical applications of Glass Mineral Wool Insulation products, provide materials complying with the testing and products requirements of UL GREENGUARD Gold Certification.

4. Installer to have minimum 5 years' experience in the business of installing insulation.

1.06 WARRANTY

A. Warranty of materials and workmanship as required by Section 23 00 00, HVAC Basic Requirements and Division 01, General Requirements.

1.07 FIRE HAZARD CLASSIFICATION

A. Maximum fire hazard classification of the composite insulation construction as installed to be not more than a Flame Spread Index (FSI) of 25 and Smoke Developed Index (SDI) of 50 as tested by current edition of ASTM E84 (NFPA 255) method.

B. Test pipe insulation in accordance with the requirements of current edition of UL "Pipe and Equipment Coverings R5583 400 8.15".

C. Test duct insulation in accordance with current edition of ASTM E84, UL 723, NFPA 255, NFPA 90A and NFPA 90B.

PART 2 - PRODUCTS

2.01 TYPE A, FLEXIBLE GLASS WOOL BLANKET

A. Acceptable Manufacturers:

1. Certainteed

2. Johns Manville

3. Knauf

4. Owens-Corning

B. ASTM C553, Type 1, Class B-2; flexible blanket.

C. 'K' Value: 0.27 BTU*in/(hr*sf*F) at 75 degrees F installed, maximum service temperature: 250 degrees F.

D. Density: 0.75 pounds per cubic foot.

E. DBDE-free. UL/E validated to be formaldehyde-free.

F. Vapor Barrier Jacket: FSK aluminum foil reinforced with glass wool yarn and laminated to fire resistant Kraft, secured with UL listed pressure sensitive tape or outward clinched expanded staples and vapor barrier mastic as needed.

2.02 TYPE B, DUCT LINER

A. Acceptable Manufacturers:

1. Certainteed
2. Johns Manville
3. Knauf
4. Owens-Corning

B. ASTM C1071; flexible blanket.

C. 'K' Value: ASTM C518, 0.25 BTU*in/(hr*sf*F) at 75 degrees F, maximum service temperature: 250 degrees F.

D. Noise Reduction Coefficient: 0.65 or higher based on ASTM C 423 "Type A mounting."

E. Maximum Velocity on Mat or Coated Air Side: 5,000 FPM.

F. Adhesive: UL listed waterproof type.

G. Fasteners: Duct liner galvanized steel pins, welded or mechanically fastened.

H. Erosion-Resistant Surfaces: UL 181.

I. ASTM G21 and ASTM G22 Microbial Growth Resistance.

J. UL GREENGUARD Certified does not support the growth of mold, fungi, or bacteria per ASTM C 1338 and meets UL Environment GREENGUARD Microbial Resistance Listing per UL 2824-“GREENGUARD Certification Program Method for Measuring Microbial Resistance”. DBDE-free. UL/E validated to be formaldehyde-free.

2.03 TYPE 2, FLEXIBLE ELASTOMERIC PIPE INSULATION

A. Acceptable Manufacturers:

1. Insulation:
   a. Armacell LLC Armaflex
   b. K-Flex
   c. Or approved equivalent.
2. Glue:
   a. Armacell LLC Armaflex Low VOC Adhesive
   b. K-Flex
   c. Or approved equivalent.
3. Paint:
   a. Armacell LLC Armaflex
   b. K-Flex
   c. Or approved equivalent.

B. Elastomeric Foam: ASTM C534; flexible, cellular elastomeric, molded or sheet.

1. Thermal Conductivity Value: As indicated in the insulation tables below.

2. Maximum Service Temperature of 220 degrees F.

3. Maximum Flame Spread: 25.

4. Maximum Smoke Developed: 50 (1-inch thick and below).

5. Vapor Retarder Jacket, for over 1-inch insulation thickness: White Kraft paper reinforced with glass wool and bonded to aluminum foil, secure with self-sealing longitudinal laps and butt strips or vapor barrier mastic.

6. Connection: Waterproof vapor retarder adhesive as needed.

7. UV Protection: UV outdoor protective coating per manufacturer's requirements.

C. Glue: Contact adhesive specifically manufactured for cementing flexible elastomeric foam.

D. Paint (for exterior insulation only): Nonhardening high elasticity type, specifically manufactured as protective covering of flexible elastomeric foam insulation for prevention of degradation due to exposure to sunlight and weather.

2.04 ACCESSORIES

A. Acceptable Manufacturers:

1. ITW Insulation Systems

2. Or approved equivalent.

B. Equipment Insulation Jacketing: Presized glass cloth, not less than 7.8 ounces/sq.yd., except as otherwise indicated. Coat with gypsum based cement.

C. Equipment Insulation Compounds: Provide adhesives, cement, sealers, mastics and protective finishes as recommended by insulation manufacturer for applications indicated.

D. General: Provide staples, bands, wire, wire netting, tape corner angles, anchors, stud pins and metal covers as recommended by insulation manufacturer for applications indicated. Accessories, i.e., adhesives, mastics, cements and tape to have the same flame and smoke component ratings as the insulation materials with which they are used. Shipping cartons to bear a label indicating that flame and smoke ratings do not exceed those listed above. Provide permanent treatment of jackets or facings to impart flame and smoke safety. Provide non-water-soluble treatments. Provide UV protection recommended by manufacturer for outdoor installation.

2.05 DUCT INSULATION ACCESSORIES

A. Acceptable Manufacturers:

1. Certainteed

2. Johns Manville

3. Owens-Corning

B. Staples, bands, wires, tape, anchors, corner angles and similar accessories as recommended by insulation manufacturer for applications indicated.

2.06 DUCT INSULATION COMPOUNDS

A. Acceptable Manufacturers:

1. Certainteed

2. Johns Manville

3. Owens-Corning

B. Cements, adhesives, coatings, sealers, protective finishes and similar accessories as recommended by insulation manufacturer for applications indicated. Comply with South Coast Air Quality Management District (SCAQMD) Rule #1168 in accordance with LLE EQ 4.1

PART 3 - EXECUTION

3.01 GENERAL INSTALLATION REQUIREMENTS

A. Verification of Conditions:

1. Do not apply insulation until pressure testing and inspection of ducts and piping has been completed.

2. Examine areas and conditions under which duct and pipe insulation will be installed. Do not proceed with work until unsatisfactory conditions have been corrected.

B. Preparation: Clean and dry surfaces to be insulated.

C. Installation:

1. Insulation: Continuous through walls, floors and partitions except where noted otherwise.

2. Piping and Equipment:

a. Install insulation over clean, dry surfaces with adjoining sections firmly butted together and covering surfaces. Fill voids and holes. Seal raw edges. Install insulation in a manner such that insulation may be split, removed, and reinstalled with vapor barrier tape on strainer caps and unions. Do not install insulation until piping has been leak tested and has passed such tests. Do not insulate manholes, equipment manufacturer's nameplates, handholes, and ASME stamps. Provide beveled edge at such insulation interruptions. Repair voids or tears.

b. Cover insulation on pipes above ground, outside of building, with aluminum jacketing. Position seam on bottom of pipe.

D. Cover insulation on exposed refrigerant piping above ground, outside of building with heavy duty multi-layered laminated jacketing tape. Position seams on bottom of pipe. Use Venture Tape VentureClad Plus 1579GCW-E or approved equal.

E. Provide accessories as required. See Part 2 Article "Accessories" above.

F. Protection and Replacement: Installed insulation during construction. Replace damaged insulation which cannot be repaired satisfactorily, including units with vapor barrier damage and moisture saturated units.

G. Labeling and Marking: Provide labels, arrows and color on piping and ductwork. Attach labels and flow direction arrows to the jacketing per Section 23 05 53, Identification for HVAC Piping, Ductwork and Equipment.

H. Ductwork:

1. Install insulation in conformance with manufacturer's recommendations to completely cover duct.

2. Butt insulation joints firmly together and install jackets and tapes smoothly and securely.

3. Apply duct insulation continuously through sleeves and prepared openings, except as otherwise specified. Apply vapor barrier materials to form complete unbroken vapor seal over insulation.

4. Coat staples and seals with vapor barrier coating.

5. Cover breaks in jacket materials with patches of same material as vapor barrier. Extend patches not less than 3-inches beyond break or penetration on all directions and secure with adhesive and staples. Seal staples and joints with vapor barrier coating.

6. Fill jacket penetrations. i.e., hangers, thermometers and damper operating rods, and other voids in insulation with vapor barrier coating. Seal penetration with vapor barrier coating. Insulate hangers and supports for cold duct in un-conditioned spaces to extent to prevent condensation on surfaces.

7. Seal and flash insulation terminations and pin punctures with reinforced vapor barrier coating.

8. Continue insulation at fire dampers and fire/smoke dampers up to and including those portions of damper frame visible at outside of the rated fire barrier. Insulating terminations at fire dampers in accordance with this Section.

9. Do not conceal duct access doors with insulation. Install insulation terminations at access door in accordance with this Section.

I. Insulation Shields: Provide hangers and shields (18 gauge minimum) outside of insulation for cold piping (<60 degrees F). Hot water piping hangers may penetrate insulation to contact pipe directly. Provide 18-inch long, noncompressible insulation section at insulation shields for lines 2-inches and larger (hot and cold) piping.

J. Ductwork Surfaces to be Insulated:

Item to be Insulated	System Insulation Type	Duct Size	Insulation Thickness
Supply ductwork where duct is not specified to be lined.	A	All	1.5-inch
Return ductwork where duct is not specified to be lined.	--	All	None
Outside Air Ducts	A	All	3-inch
Exhaust ducts within 10-feet of exterior	A	All	3-inch

1. Note: Insulation thickness shown is a minimum. If state codes require additional thickness, then provide insulation thickness per code requirements.

K. Piping Surfaces to be Insulated:

Item to be Insulated	System Insulation Type	Conductivity Range (Btu-inch per hour per SF per degrees F)	Pipe Size (Inches)	Insulation Thickness (Inches)
Refrigerant Suction and Liquid Piping (40F to 60F)	2	0.21-0.27 at a mean rating temperature of 75 degrees F	<1 1 to <1.5 1.5 to <4 4 to <8 >= 8	0.5 0.5 1.0 1.0 1.0

1. Note: Insulation thickness shown is a minimum. If state code requires additional thickness, then provide insulation thickness per code requirements.

3.02 TYPE A, FLEXIBLE GLASS WOOL BLANKET

A. Install insulation in conformance with manufacturer's recommendations and requirements.

B. Duct Wrap: Cover air ducts per insulation table except ducts internally lined where internal duct lining is adequate to achieve adequate insulating values to meet local Energy Codes (indicate on shop drawings, locations where duct wrap is planned to be omitted and indicate internal duct lining insulating values to confirm they will meet the Energy Code.) Wrap tightly with circumferential joints butted and longitudinal joints overlapped minimum of 2-inches. On ducts over 24-inches wide, additionally secure insulation with suitable mechanical fasteners at 18-inches on center. Circumferential and longitudinal joints stapled with flare staples 6-inches on center and covered with 3-inch wide, foil reinforced tape.

3.03 TYPE B, DUCT LINER

A. Install insulation in conformance with manufacturer's recommendations and requirements.

B. Duct Liners: Mat finish surface on air stream side. Secure insulation to cleaned sheet metal duct with continuous (minimum 90) percent coat of adhesive. Secure liner with mechanical fasteners 15-inches on center or per manufacturer requirements. Accurately cut liner and thoroughly coat ends with adhesive. Butt joints tightly. Top and bottom sections of insulation overlap sides. Factory/field coat exposed edges. Metal nosing for exposed leading or transverse edges and when velocity exceeds 3500 FPM or manufacturer rating on exposed edges. Keep duct liner clean and free from dust. At

completion of Project, vacuum duct liner if it is dirty or dusty. Do not use small pieces. If insulation is installed without horizontal, longitudinal, and end joints butted together, installation will be rejected and work removed and replaced with work that conforms to this Specification.

3.04 TYPE 2, FLEXIBLE ELASTOMERIC PIPE INSULATION

A. Flexible Elastomeric Insulation:

1. Slip insulation on pipe prior to connection. Butt joints sealed with manufacturer's adhesive. Insulate fitting with miter-cut pieces. Cover insulation exposed to weather and below grade with two coats of finish as recommended by manufacturer.

B. Flexible Elastomeric Tubing:

1. Flexible Elastomeric Tubing: Slip insulation over piping or, if piping is already installed, slit insulation and snap over piping. Joints and butt ends must be adhered with 520 adhesive.

C. See General Installation Requirements above.

D. Install insulation in conformance with manufacturer's recommendations and requirements.

E. Slip insulation on pipe prior to connection. Butt joints sealed with manufacturer's adhesive. Insulate fitting with miter-cut pieces. Cover insulation exposed to weather and undergrade with two coats of finish as recommended by manufacturer.

F. Install in accordance with manufacturer's instructions for below grade installation.

3.05 ACCESSORIES

A. Install insulation in conformance with manufacturer's instructions, recommendations and requirements.

B. See General Installation Requirements above.

C. Furnish and install accessories for all insulation types listed in this Section.

3.06 DUCT INSULATION ACCESSORIES

A. Install insulation in conformance with manufacturer's recommendations and requirements.

3.07 DUCT INSULATION COMPOUNDS

A. Install insulation in conformance with manufacturer's recommendations and requirements.

END OF SECTION

SECTION 23 09 33

ELECTRIC AND ELECTRONIC CONTROL SYSTEM FOR HVAC

PART 1 - GENERAL

1.01 SUMMARY

A. Work Included:

1. Room Thermostats
2. Smoke Detection for Projects with a Building Fire Alarm System
3. Relays and Contactors
4. Transformers
5. Wiring
6. Damper Operators

1.02 RELATED SECTIONS

A. Contents of Division 23, HVAC and Division 01, General Requirements apply to this Section.

B. In addition, reference the following:

1. Power wiring per Division 26, Electrical.

1.03 REFERENCES AND STANDARDS

A. References and Standards as required by Section 23 00 00, HVAC Basic Requirements and Division 01, General Requirements.

1.04 SUBMITTALS

A. Submittals as required by Section 23 00 00, HVAC Basic Requirements and Division 01, General Requirements.

B. In addition, provide:

1. Drawings: complete control diagram, including written description of control sequences.
2. Operation and Maintenance Manual: Include record wiring drawings showing installed condition and operating changes made during start-up.

1.05 QUALITY ASSURANCE

A. Quality assurance as required by Section 23 00 00, HVAC Basic Requirements and Division 01, General Requirements.

1.06 WARRANTY

A. Warranty of materials and workmanship as outlined in Section 23 00 00, HVAC Basic Requirements and Division 01, General Requirements.

B. In addition, provide:

1. Within 30 days prior to warranty expiration date, control supplier to visit job site and check calibration, operation, and adjustment of temperature, pressure and humidity sensors, valves, dampers, thermostats and other devices installed by control supplier. Make repair or replacement of defective control equipment as required at no charge to Owner.

2. Submit letter to Architect certifying that this work has been completed.

3. Attach copy of service report signed by Owner's Authorized Representative.

PART 2 - PRODUCTS

2.01 MANUFACTURERS

A. Room Thermostats:

1. Honeywell

2. Siemens

3. Johnson Controls

4. Reliable Controls

5. Alerton

B. Damper Operators:

1. Belimo

2. Honeywell

3. Siemens

4. Or approved equivalent.

2.02 ROOM THERMOSTATS

A. For packaged equipment, including direct expansion split and VRF units, provide thermostats/controllers as manufactured by packaged equipment manufacturer.

B. Electronic Thermostat:

1. Seven day programmable, PI control.

2. Occupied/unoccupied heat and cool setpoints.

3. Automatic heat/cool changeover and fan control.

4. Touch screen display.

5. Cooling Stages: Provide as required to match in air conditioner.

6. Basis of Design: Honeywell RTH 7600D.

C. Line Voltage, Cooling Thermostat: Wall mounted thermostat, non-programmable, dial adjustment between 44 degrees F and 86 degrees F, gold color. Basis of Design: Honeywell T65.

2.03 RELAYS AND CONTACTORS

A. Provide relays and contactors where required or as shown on Drawing to meet operating sequence where not internal to manufacturer's equipment.

B. Furnish relays or contactors with required coil voltage and contact amperage rating for use specified on Drawing and in manufacturer's equipment.

C. Mount relays in single control cabinet with hinge door and latch.

D. Control cabinet contains relays and numbered terminal strips for connection of relays and field wiring. Mount cabinet on painted plywood panel securely attached to wall framing. Mount time clock, transformer and motor contactors (if required) on plywood adjacent to control panel.

2.04 TRANSFORMERS

A. Transformers selected and sized for appropriate VAC capacity and installed and fused according to applicable codes. Provide wiring to nearest suitable power source as required.

2.05 WIRING

A. In accordance with Division 26, Electrical and applicable codes.

B. Provide line and low voltage wiring relating to control system. Includes wiring of contactors, relays, circuits, and incidental power wiring: operation power for time clock, power when run through stat/timeclock/relay, transformers.

2.06 DAMPER OPERATORS

A. Size operators to operate dampers properly against system pressures, pressure differentials and velocities. Damper operators sized for 150 percent of damper forces normally encountered. Spring return closed for outside air applications.

PART 3 - EXECUTION

3.01 SEQUENCE OF OPERATION

A. Split Systems: Room thermostats to modulate economizer cycle, cooling and heating in sequence to maintain setpoints of 75 degrees F in cooling and 70 degrees F in heating. Provide motorized low leakage outside air dampers. Dampers to be closed on fan shutdown. Program thermostats to time schedule coordinated with Owner. See below for fire shut-down.

B. Unit Heaters: Install manufacturer’s furnish thermostat as shown on drawings. Program 55 degrees F heating setpoint. Heater to run off own internal controls.

C. Exhaust Fans:

1. Exhaust Fans (EF-1): Controlled from line voltage cooling thermostat. Open motorized intake and exhaust dampers prior to starting fan.

3.02 SMOKE DETECTION (FOR PROJECTS WITH A FIRE ALARM SYSTEM)

A. Smoke detector furnished and powered/wired. Coordinate with fire alarm equipment supplier. Installation of duct smoke detector housing and sampling tube under Division 23, HVAC.

B. Install smoke detectors in return air systems greater than 2000 CFM.

3.03 INSTALLATION OF AUXILIARY CONTROL DEVICES

A. General:

1. Install sensors and thermostats in accordance with manufacturer's recommendations.

2. Room sensors and thermostats installed at 48-inches AFF to midline of sensor on concealed junction boxes properly supported by wall framing at the locations shown on the Drawings.

B. Actuators:

1. General:

a. Mount and link control damper actuators according to manufacturer's instructions.

b. Check operation of damper/actuator combination to confirm that actuator modulates damper smoothly throughout stroke to both open and closed positions.

2. Actuator Mounting for Damper arrangements to comply to the following:

a. Damper Actuators: Do not install in the air stream.

b. Use a weather proof enclosure (clear and see through) if actuators are located outside.

c. Damper or valve actuator ambient temperature not-to-exceed 122 degrees F through any combination of medium temperature or surrounding air. Provide appropriate air gaps, thermal isolation washers or spacers, standoff legs, or insulation as necessary. Mount per manufacturer's recommendations.

d. Actuator cords or conduit to incorporate a drip leg if condensation is possible. Do not allow water to contact actuator or internal parts. Location of conduits in temperatures dropping below dew point to be avoided to prevent water from condensing in conduit and running into actuator.

END OF SECTION

SECTION 23 21 13

HVAC PIPING

PART 1 - GENERAL

1.01 SUMMARY

A. Work Included:

1. Equipment Drains and Overflows
2. Unions
3. Refrigerant Piping

1.02 RELATED SECTIONS

A. Contents of Division 23, HVAC and Division 01, General Requirements apply to this Section.

1.03 REFERENCES AND STANDARDS

A. References and Standards as required by Section 23 00 00, HVAC Basic Requirements and Division 01, General Requirements.

1.04 SUBMITTALS

A. Submittals as required by Section 23 00 00, HVAC Basic Requirements and Division 01, General Requirements.

B. In addition, provide:

1. Welding Certificates: Copies of certificates for welding procedures and personnel.
2. Field Test Reports: Written reports of tests specified in Part 3 of this Section. Include the following:
   a. Test procedures used.
   b. Test results that comply with requirements.
   c. Failed test results and corrective action taken to achieve requirements.
3. Water Analysis: Submit a copy of the water analysis to illustrate water quality available at project site.
4. Grooved couplings, fittings, valves, and specialties: Show grooved joint couplings and fittings on Shop Drawings and product submittals, and specifically identify with the applicable coupling style number.

1.05 QUALITY ASSURANCE

A. Quality assurance as required by Section 23 00 00, HVAC Basic Requirements and Division 01, General Requirements.

B. In addition, meet the following:

1. Installer Qualifications: Company specializing in performing work of the type specified in this Section, with documented experience.

2. Welder Qualifications: Certify in accordance with ASME (BPV IX).

3. ASME Compliance: Comply with ASME B31.9 "Building Services Piping" for materials, products, and installation. Provide safety valves and pressure vessels with the appropriate ASME label. Fabricate and stamp air separators and expansion tanks to comply with the ASME Boiler and Pressure Vessel Code, Section VIII, Division 01.

4. Grooved couplings, fittings, valves, and specialties: Provide all grooved couplings, fittings, valves, and specialty products from a single manufacturer. Utilize only grooving tools from the same manufacturer as the grooved components. Date-stamp all castings used for couplings housings, fittings, or valve and specialty bodies for quality assurance and traceability.

5. Refrigerant Piping:

   a. Welding: Qualify procedures and personnel according to ASME Boiler and Pressure Vessel Code: Section IX "Welding and Brazing Qualifications."

   b. ASHRAE Standard: Comply with ASHRAE 15, "Safety Code for Mechanical Refrigeration."

   c. ASME Standard: Comply with ASME B31.5, "Refrigeration Piping."

   d. UL Standard: Provide products complying with UL 207, "Refrigerant-Containing Components and Accessories, Nonelectrical" or UL 429 "Electrically Operated Valves."

1.06 WARRANTY

A. Warranty of materials and workmanship as required by Section 23 00 00, HVAC Basic Requirements and Division 01, General Requirements.

PART 2 - PRODUCTS

2.01 EQUIPMENT DRAINS AND OVERFLOWS

A. Copper Tube: ASTM B 88 (ASTM B 88M), Type L (B), drawn.

1. Fittings: ASME B16.18, cast brass, or ASME B16.22 solder wrought copper.

2. Joints: Solder, lead free, ASTM B 32, HB alloy (95-5 tin-antimony), or tin and silver.

3. Joints: Brazed, AWS A5.8, Classification BAg-1 (silver). Pipes 2-1/2-inch or larger or piping routed over food preparation centers, food serving facilities, food storage areas, computer rooms, telecommunications rooms, and electrical rooms.

2.02 UNIONS

A. Unions for Pipe 2-inches and Under:

1. Ferrous Piping: 150 PSIG malleable iron, threaded, ASME B16.39.

2. Copper Pipe: Bronze, soldered joints, ASME B16.22.

B. Dielectric Connections: Provide dielectric waterway or brass nipple fitting with threaded ends. Dielectric unions are not allowed.

2.03 REFRIGERANT PIPING

A. Piping:

1. Copper Tube: ASTM B 280, Type ACR, annealed-temper tube, clean, dry and capped.

a. Fittings: ASME B16.22 wrought copper.

b. Joints: Braze, AWS A5.8 BCuP silver/phosphorus/copper alloy (15 percent Silver).

PART 3 - EXECUTION

3.01 GENERAL INSTALLATION REQUIREMENTS

A. Install per manufacturer's written instructions and requirements.

B. Preparation:

1. Ream pipe and tube ends. Remove burrs. Bevel plain end ferrous pipe.

2. Remove scale and dirt on inside and outside before assembly.

3. Prepare piping connections to equipment with flanges or unions.

4. Keep open ends of pipe free from scale and dirt. Protect open ends with temporary plugs or caps.

C. Field Quality Control:

1. Leave joints, including welds, uninsulated and exposed for examination during test.

2. Provide temporary restraints for expansion joints that cannot sustain reactions due to test pressure. If temporary restraints are impractical, isolate expansion joints from testing.

3. Flush system with clean water. Clean strainers.

4. Isolate equipment from piping. If a valve is used to isolate equipment, provide closure capable of sealing against test pressure without damage to valve. Install blinds in flanged joints to isolate equipment.

5. Install safety valve, set at a pressure no more than one-third higher than test pressure, to protect against damage by expanding liquid or other source of overpressure during test.

6. Perform the following tests on hydronic piping:

a. Use ambient temperature water as a testing medium unless there is risk of damage due to freezing. Another liquid that is safe for workers and compatible with piping may be used.

b. While filling system, use vents installed at high points of system to release trapped air. Use drains installed at low points for complete draining of liquid.

c. Check expansion tanks to determine that they are not air bound and that system is full of water.

d. Subject piping system to hydrostatic test pressure that is not less than 1.5 times the design pressure. Test pressure not-to-exceed maximum pressure for any vessel, pump, valve, or other component in system under test. Verify that stress due to pressure at bottom of vertical runs does not exceed either 90 percent of specified minimum yield strength or 1.7 times "SE" value in Appendix A of ASME B31.9, "Building Services Piping."

e. After hydrostatic test pressure has been applied for at least four hours, examine piping, joints and connections for leakage. Eliminate leaks by tightening, repairing, or replacing components, and repeat hydrostatic test until there are no leaks.

f. Prepare written report of testing.

D. Pipe Painting Requirements:

1. Paint all ferrous metal pipe including flanges. Do not paint flange bolts, washers and nuts. At flexible coupling the only the flanges are to be painted. All rubber portions are to remain unpainted.

2. Paint exterior uninsulated steel piping with exterior latex, semi-gloss (AE), Master Painters Institute MPI 11, suitable for metallic surfaces B, Haze Gray color.

3. Use ready-mixed (including colors) paint. Prime paint with pigment and vehicle, compatible with substrate and finish coats specified. Volatile Organic Compounds (VOC) content of paint materials shall not exceed 50g/l for exterior latex paints and primers. Lead-based paint is not permitted.

4. Do not apply coating when air or substrate conditions are:

a. Less than 5 degrees F above dew point.

b. Below 50 degrees F or over 95 degrees F, unless specifically pre-approved by the product manufacturer.

5. Do no exterior painting when it is windy and dusty. Do not paint in direct sunlight or on surfaces that the sun will soon warm.

6. Apply only on clean, dry and frost-free surface. Remove all materials the will affect the ability of the paint to adhere to the pipe including painted pipe identification labels.

7. Remove oil, grease, soil, drawing and cutting compounds, flux and other detrimental foreign. Remove loose mill scale, rust, and paint, by hand or power tool cleaning. All surfaces are to be dry at the time paint is applied.

8. Apply paint in two coats; prime, and finish. Apply each coat evenly and cover substrate completely. Allow not less than 48 hours between application of succeeding coats, except as allowed by manufacturer's printed instructions.

9. Finish surfaces to show solid even color, free from runs, lumps, brushmarks, laps, holidays, or other defects. Apply by brush, roller or spray.

3.02 REFRIGERANT PIPING INSTALLATION

A. Install systems in accordance with ASHRAE Standard 15.

B. Group piping whenever practical at common elevations and locations. Slope piping one percent in direction of oil return.

C. Arrange piping to return oil to compressor. Provide traps and loops in piping, and provide double risers as required. Slope horizontal piping 0.40 percent in direction of flow.

D. Flood piping system with nitrogen when brazing.

E. Follow ASHRAE Standard 15 procedures for charging and purging of systems and for disposal of refrigerant.

F. Provide replaceable cartridge filter-driers, with isolation valves and valved bypass.

G. Locate expansion valve sensing bulb immediately downstream of evaporator on suction line.

H. Fully charge completed system with refrigerant after testing.

I. Field Quality Control:

1. Test refrigeration system in accordance with ASME B31.5.

2. Pressure test system with dry nitrogen to 200 PSI. Perform final tests at 27-inches vacuum and 200 PSI using electronic leak detector. Test to no leakage.

END OF SECTION

(THIS PAGE LEFT BLANK INTENTIONALLY)

SECTION 23 31 00

HVAC DUCTS AND CASINGS

PART 1 - GENERAL

1.01 SUMMARY

A. Work Included:

1. Ductwork, Joints and Fittings
2. Drain Pans
3. Ductwork Joint Sealers and Sealants

1.02 RELATED SECTIONS

A. Contents of Division 23, HVAC and Division 01, General Requirements apply to this Section.

B. In addition, reference the following:

1. Section 23 05 29, Hangers and Supports for HVAC Piping, Ductwork and Equipment.
2. Section 23 05 93, Testing, Adjusting, and Balancing for HVAC.

1.03 REFERENCES AND STANDARDS

A. References and Standards as required by Section 23 00 00, HVAC Basic Requirements and Division 01, General Requirements.

1.04 SUBMITTALS

A. Submittals as required by Section 23 00 00, HVAC Basic Requirements and Division 01, General Requirements.

B. In addition, provide:

1. Welding Certificates
2. Field Quality Control Reports

1.05 QUALITY ASSURANCE

A. Quality assurance as required by Section 23 00 00, HVAC Basic Requirements and Division 01, General Requirements.

B. In addition, meet the following:

1. NFPA Compliance:
   a. NFPA 90A Installation of Air Conditioning and Ventilating Systems.
   b. NFPA 90B, Installation of Warm Air Heating and Air Conditioning Systems.
2. Comply with NFPA 96, Ventilation Control and Fire Protection of Commercial Cooking Operations, Ch. 3, Duct System for range hood ducts, unless otherwise indicated.

3. Comply with SMACNA's HVAC Duct Construction Standards - Metal and Flexible for acceptable materials, material thicknesses, and duct construction methods, unless otherwise indicated. Provide sheet metal materials free of pitting, seam marks, roller marks, stains, discolorations, and other imperfections.

1.06 WARRANTY

A. Warranty of materials and workmanship as required by Section 23 00 00, HVAC Basic Requirements and Division 01, General Requirements.

1.07 SYSTEM DESCRIPTION

A. Duct system design, as indicated, has been used to select size and type of air-moving and distribution equipment and other air system components. Duct design is generally diagrammatic and is not meant to be scaled. Major changes to layout or configuration of duct system must be specifically approved in writing by Architect. Accompany requests for layout modifications with calculations showing that proposed layout will provide original design results without increasing system total pressure.

PART 2 - PRODUCTS

2.01 DUCTWORK, JOINTS AND FITTINGS

A. Manufacturers:

1. Ductmate
2. Lindab Inc.
3. Nexus Inc.
4. SEMCO
5. United McGill Corporation
6. Ward Industries

B. Materials:

1. Galvanized Steel Ducts: Hot-dipped galvanized steel sheet, lock-forming quality, ASTM A 653/A 653M FS Type B, with G90/Z275 coating, minimum 26 gauge except where heavier material is specifed. Ducts to have mill phosphatized finish for surfaces exposed to view.

C. Fabricate ducts, elbows, transitions, offsets, branch connections, and other construction according to SMACNA's HVAC Duct Construction Standards - Metal and Flexible and complying with requirements for metal thickness, reinforcing types and intervals, tie-rod applications, and joint types and intervals.

1. Lengths: Fabricate rectangular ducts in lengths appropriate to reinforcement and rigidity class required for pressure class.
2. Deflection: Duct systems not-to-exceed deflection limits according to SMACNA's HVAC Duct Construction Standards - Metal and Flexible.
3. Transverse Joints: Prefabricated slide-on joints and components constructed using manufacturer's guidelines for material thickness, reinforcement size and spacing, and joint reinforcement.

D. Formed-On Flanges: construct according to SMACNA's HVAC Duct Construction Standards - Metal and Flexible, Figure 1-4, using corner, bolt, cleat, and gasket details.

1. Duct Size: Maximum 30-inches wide and up to 2-inch wg pressure class.

2. Longitudinal Seams: Pittsburgh lock sealed with noncuring polymer sealant.

3. Cross Breaking or Cross Beading: Cross break or cross bead duct sides 19-inches and larger and 0.0359-inch thick or less, with more than 10 SF of nonbraced panel area unless ducts are lined.

E. Round, Spiral Lock-Seam Ducts: Fabricate supply ducts of material specified in this Section according to SMACNA's HVAC Duct Construction Standards - Metal and Flexible.

1. Ducts up to 20-inches in Diameter: Interior, center-beaded slip coupling, sealed before and after fastening, attached with sheet metal screws.

2. Ducts 21- to 72-inches in Diameter: Three-piece, gasketed, flanged joint consisting of two internal flanges with sealant and one external closure band with gasket.

3. Ducts Larger than 72-inches in Diameter: Companion angle flanged joints per SMACNA HVAC Duct Construction Standards-Metal and Flexible, Figure 3-2.

4. Round Ducts: Prefabricated connection system consisting of double-lipped, EPDM rubber gasket. Manufacture ducts according to connection system manufacturer's tolerances.

F. 90-Degree Tees and laterals and Conical Tees: Fabricate to comply with SMACNA's HVAC Duct Construction Standards-Metal and Flexible, with metal thicknesses specified for longitudinal-seam straight ducts.

G. Diverging-Flow Fittings: Fabricate with reduced entrance to branch taps and with no excess material projecting from fitting onto branch tap entrance.

H. Fabricate elbows using die-formed, gored, pleated, or mitered construction. Bend radius of die-formed, gored, and pleated elbows to be 1.5 times duct diameter. Unless elbow construction type is indicated, fabricate elbows as follows:

1. Mitered-Elbow Radius and Number of Pieces: Welded construction complying with SMACNA's HVAC Duct Construction Standards-Metal and flexible, unless otherwise indicated.

2. Round Mitered Elbows: Welded construction with the following metal thickness for pressure classes from minus 2- to plus 2-inch wg (minus 500 to plus 500 Pa):

a. Ducts 3- to 36-inches in Diameter: 0.034-inch .

3. Round Mitered Elbows: Welded construction with the following metal thickness for pressure classes from 2- to 10-inch wg:

a. Ducts 3- to 26-inches in Diameter: 0.034-inch.

b. Ducts 27- to 50-inches in Diameter: 0.040-inch.

4. 90-Degree, Two-Piece, Mitered Elbows: Use only for supply systems or for material-handling Class A or B exhaust systems and only where space restrictions do not permit using radius elbows. Fabricate with single-thickness turning vanes.

5. Round Elbows:

   a. 8-inches and Less in Diameter: Fabricate die-formed elbows for 45 and 90-degree elbows and pleated elbows for 30, 45, 60 and 90 degrees only. Fabricate nonstandard bend-angle configurations or non-standard diameter elbows with gored construction.

   b. 9 through 14-inches in Diameter: Fabricate gored or pleated elbows for 30, 45, 60 and 90 degrees unless space restrictions require mitered elbows. Fabricate nonstandard bend-angle configurations or nonstandard diameter elbows with gored construction.

   c. Larger than 14-inches in Diameter and All Flat-Oval Elbows: Fabricate gored elbows unless space restrictions require mitered elbows.

6. Die-Formed Elbows for Sizes through 8-inches in Diameter and Pressures 0.040-inch thick with two-piece welded construction.

7. Round Gored-Elbow Metal Thickness: Same as non-elbow fittings specified above.

8. Pleated Elbows for Sizes through 14-inches in Diameter and Pressures through 10-inch wg (2500 Pa): 0.022-inch.

9. Not acceptable:

   a. Corrugated or flexible metal duct.

   b. Adjustable elbows.

2.02 DRAIN PANS

A. Primary Drain Pans: Stainless Steel, Fabricated in accordance with ASTM A167 and A480.

B. Secondary Drain Pans: Galvanized Steel: Hot-dipped galvanized steel sheet, ASTM A 653/A 653M FS Type B, with G90/Z275 coating.

2.03 DUCTWORK JOINT SEALERS AND SEALANTS

A. Manufacturers:

   1. Ductmate

   2. Duro Dyne

   3. Hardcast

   4. United McGill Corporation

   5. Vulkem

   6. Foster

   7. Childer

B. Joint Sealers and Sealants: Non-hardening, water resistant, mildew and mold resistant.

C. Low Emitting Materials Requirement: Adhesives, sealants and sealant primers must comply with: South Coast Air Quality Management District (SCAQMD) Rule #1168.

D. Type: Heavy mastic or liquid used alone or with tape, suitable for joint configuration and compatible with substrates, and recommended by manufacturer for pressure and leakage class of ducts.

E. Surface Burning Characteristics: Flame spread of zero, smoke developed of zero, when tested in accordance with ASTM E 84.

F. Water Based Sealant for Brush-On Application: Flexible, adhesive sealant, resistant to UV light, UL-181A, and UL-181-B listed, complying with NFPA requirements for Class 1 ducts. Min. 69 percent solids, nonflammable. Hardcast Versa-Grip 181; Childers CP-146; Foster 32-19 for SMACNA 1/2, 1, 2, 3, 4, 6, and 10-inch WG duct classes, and SMACNA Seal Class A, B, or C.

G. Flanged Joint Mastic: One-part, acid-curing, silicone, elastomeric joint sealant complying with ASTM C920, Type S, Grade NS, Class 25, Use O.

H. Flange Gaskets: Butyl rubber or EPDM polymer with polyisobutylene plasticizer.

I. Polyurethane Sealant: General-purpose, exterior use, non-brittle sealant for gunned application. Vulkem 616 or equal.

PART 3 - EXECUTION

3.01 GENERAL INSTALLATION REQUIREMENTS

A. General: Use the following pressure seal, and leakage class(es) in design of ductwork specified in this section unless otherwise noted on Drawings.

System	Pressure Class (Inches of Water)	Seal Class	Leakage Class Round Ducts	Leakage Class Rectangular Ducts
Low pressure	+ 1-inch	A	3	6
Return and exhaust	0.5-inch more negative than return/exhaust fan pressure or -2-inch pressure class, whichever is more negative.	A	3	6

B. Ductwork Installation:

1. General: Install entire duct system in accordance with drawings, Specifications, and latest issues of local Mechanical Code, NFPA 90A, and SMACNA Duct Construction Manual. At Contractor's option, rectangular ductwork may be resized to maintain an equivalent air velocity and friction rate, while maintaining a maximum aspect ratio of 3. Remove markings and tagging from ductwork exterior surface in mechanical rooms and other locations where ductwork is exposed.

2. The duct layout shown on the Contract Drawings is diagrammatic in nature. Coordinate the ductwork routing and layout, and make alterations to the ductwork routing and layout to eliminate physical interferences. Where deviations in the ductwork routing as shown in the Contract Drawings are required, alterations may be made so as not to compromise the air flow, pressure drop, and sound characteristics of the duct fitting or duct run as shown on the Contract Drawings. In the event Architect determines that the installed ductwork is inconsistent with the above mentioned criteria, remove and replace at no additional cost to the Owner.

3. Install ducts with fewest possible joints.

4. Install fabricated fittings for changes in directions, size, shape, and for connections.

5. Install couplings tight to duct wall surface with a minimum of projections into duct. Secure couplings with sheet metal screws. Install screws at intervals of 12-inches, with a minimum of 3 screws in each coupling.

6. Install ducts, unless otherwise indicated, vertically and horizontally and parallel and perpendicular to building lines; avoid diagonal runs.

7. Install ducts close to walls, overhead construction, columns, and other structural and permanent enclosure elements of building.

8. Install ducts with a clearance of 1-inch, plus allowance for insulation thickness. Allow for easy removal of ceiling tile.

9. Conceal ducts from view in finished spaces. Do not encase horizontal runs in solid partitions unless specifically indicated.

10. Coordinate layout with suspended ceiling, air duct accessories, lighting layouts, and similar finish work.

11. Electrical and IT Equipment Spaces: route ducts to avoid passing through transformer vaults, electrical equipment spaces, IDF/MPOE rooms, and enclosures.

12. Non-Fire-Rated Partition Penetrations: Where ducts pass through interior partitions and exterior walls and are exposed to view, conceal spaces between construction openings and ducts or duct insulation with sheet metal flanges of same metal thickness as ducts. Overlap openings on 4 sides by at least 1-1/2-inches.

13. Fire- and Smoke-Rated Partition Penetrations: Where ducts pass through interior partitions and exterior walls, install appropriately rated fire, smoke or combination fire and smoke dampers as governed by Building Code and AHJ, including sleeves, and firestopping sealant.

14. Install ducts with hangers and braces designed to withstand, without damage to equipment, seismic force required by applicable building codes. Reference SMACNA's Seismic Restraint Manual: Guidelines for Mechanical Systems, Mason Seismic Restraint and Support Systems.

15. Protect duct interiors from the elements and foreign materials until building is enclosed. Follow SMACNA's Duct Cleanliness for New Construction Advanced Level.

16. Paint interiors of metal ducts, that do not have duct liner, for 24-inches upstream of registers and grilles. Apply one coat of flat, black, latex finish coat over a compatible duct material.

17. Install ductwork in the location and manner shown and detailed. Review deviations required by job conditions with Architect prior to any fabrication. Provide fittings for construction per SMACNA.

18. Install flexible ductwork to limit sag between support hangers to 1/2-inch per foot of spacing support.

C. Flanged Take-Offs:

1. Install at branch takeoffs to outlets using round or flex duct.

2. Flanged take-offs secured with minimum 8-inch screw spacing (three screws minimum).

3. Provide ductwork taps and branches off of main ducts at 45 degrees whether shown on Drawings or not (drawings are diagrammatic).

D. Cleaning:

1. Clean duct systems with high power vacuum machines. Protect equipment that could be harmed by excessive dirt with filters, or bypass during cleaning. Provide adequate access into ductwork for cleaning purposes.

2. Grille and Exposed Duct Cleaning:

a. After completion of ductwork installation, operate each fan system (excluding exhaust fans) for a minimum of 30 minutes prior to installation of ceiling grilles and diffusers. After grilles and diffusers are installed, clean out accumulation of particles from grilles and diffusers prior to acceptance.

b. Clean exterior surface of ducts exposed to public view of chalk, pencil and pen marks, labels, sizing tags, dirt, dust, etc., so that upon completion of installation, ducts are left in clean and unblemished manufactured conditions.

c. Exposed duct and grilles to remain free of dust entrained streaks due to leakage at joints and grille connections during warranty period. Clean leaks, seal and refinish to match existing if visible streaks develop.

3.02 DUCTWORK, JOINTS AND FITTINGS INSTALLATION

A. Duct Materials - Applied Locations:

1. General: Use the following materials in design of ductwork specified in this Section unless otherwise noted on the Drawings.

Location or Application	Material
Supply, Return, Transfer, and Exhaust - Low Pressure	Single Wall, Galvanized Steel

B. Ductwork Installation:

1. Fabricate radius elbows with centerline radius not less than 1-1/2 duct diameters.

2. Do not install duct size transition pitch angles which exceed 30 degrees for reductions in duct size in the direction of airflow, and 15 degrees for expansions in duct size in the direction of airflow.

3. Install fixed turning vanes in square throat rectangular elbows and in tees.

4. Fabricate duct turns with the inside (smallest) radius at least equal to the duct width (supply ducts) and 1.5 times radius (return and exhaust ducts). Where necessary, square elbows may be used, with maximum available inside radius and with fixed turning vanes. In healthcare settings such as hospitals and medical office buildings, square elbows and turning vanes allowed on supply ductwork only.

3.03 DRAIN PANS INSTALLATION

A. Install where shown on Drawings. Drain provided by Division 22, Plumbing. Provide drain (sized per code) connection from each drain pan and pipe to nearest floor drain through trap and 10-inch air gap. Drain pans over 6-feet in length require drain connections from both ends. Pitch drain pans in direction of air flow and to drain. Support secondary drain pan independently from equipment.

3.04 DUCTWORK JOINT SEALERS AND SEALANTS INSTALLATION

A. Joints and Seam Joint Sealing:

1. Seal duct seams and joints according to SMACNA's HVAC Duct Construction Standards - Metal and Flexible, for duct pressure class indicated.

2. Seal transverse joints, longitudinal seams and duct wall penetrations including screw, fastener, pipe, rod, and wire.

3. Seal ducts before external insulation is applied.

4. Tape joints of PVC coated metal ductwork with PVC tape.

5. Fasteners such as sheet-metal screws, machine screws or rivets to be cadmium plated.

6. Rectangular Ductwork: Where intermediate joint reinforcement is required for duct of negative pressure class, pre-drill stiffening flange and provide fastener maximum 8-inches on center. Where retaining flanges are welded to duct wall, paint welds with zinc coating.

7. Single Wall Round Ductwork: Joint to incorporate beaded slip collar with minimum #8 sheet metal screws 8-inches on center. Seal ductwork as specified in this Section.

8. Seal joints and seams. Apply sealant to make end connectors before insertion, and afterward to cover entire joint and sheet metal screws.

9. Double Wall Round Ductwork: Joint to incorporate beaded slip collar or flanged connection, with minimum #8 sheet metal screws 8-inches on center. Seal ductwork as specified in this Section.

10. Duct sizes indicated are inside clear dimensions. For lined ducts, maintain sizes inside lining.

11. Provide openings in ductwork where required to accommodate thermometers and control devices. Provide pitot tube openings where required for testing of systems, complete with metal can with spring device or screw to ensure against air leakage. Where openings are provided in insulated ductwork, install insulation material inside a metal ring.

12. Locate ducts with sufficient space around equipment to allow normal operating and maintenance activities as well as Code required clearances.

END OF SECTION

SECTION 23 33 00

AIR DUCT ACCESSORIES

PART 1 - GENERAL

1.01 SUMMARY

A. Work Included:

1. Sheet Metal Materials
2. Backdraft Dampers
3. Dampers
4. Concealed Damper Hardware
5. Access Doors
6. Duct Test Holes
7. Turning Vanes
8. Flexible Connectors

1.02 RELATED SECTIONS

A. Contents of Division 23, HVAC and Division 01, General Requirements apply to this Section.

1.03 REFERENCES AND STANDARDS

A. References and Standards as required by Section 23 00 00, HVAC Basic Requirements and Division 01, General Requirements.

1.04 SUBMITTALS

A. Submittals as required by Section 23 00 00, HVAC Basic Requirements and Division 01, General Requirements.

B. In addition, provide:

1. Manufacturer's catalog data and fabrication/installation drawings for each factory fabricated duct accessory. Include leakage, pressure drop and maximum back pressure data.
2. Shop Drawings: Indicate air duct accessories.
3. Manufacturer's installation instructions: Provide instructions for each factory fabricated duct accessory.
4. Maintenance Materials: Furnish the following for Owner's use in maintenance of project.
   a. See Division 01, General Requirements, Product Requirements for additional provisions.

1.05 QUALITY ASSURANCE

A. Quality assurance as required by Section 23 00 00, HVAC Basic Requirements and Division 01, General Requirements.

B. In addition, meet the following:

1. Manufacturer Qualifications: Company specializing in manufacturing the type of products specified in this Section, with minimum five years of documented experience.

2. Products Requiring Electrical Connection: Listed and classified by Underwriters Laboratories Inc. as suitable for the purpose specified and indicated.

3. AMCA 500 - Test Methods for Louvers, Dampers and Shutters.

4. AMCA 511 - Certified Ratings Program for Air Control Devices.

5. AMCA 611, latest edition - Certified Ratings Program - Product Rating Manual for Airflow Measurement Stations.

6. AMCA 610, latest edition - Laboratory Methods of Testing Airflow Measurement Stations for Performance Rating.

7. NFPA 90A - Installation of Air Conditioning and Ventilating Systems.

1.06 WARRANTY

A. Warranty of materials and workmanship as required by Section 23 00 00, HVAC Basic Requirements and Division 01, General Requirements.

PART 2 - PRODUCTS

2.01 SHEET METAL MATERIALS

A. Comply with SMACNA's "HVAC Duct Construction Standards--Metal and Flexible" for acceptable materials, material thicknesses, and duct construction methods, unless otherwise indicated.

B. Galvanized Sheet Steel: Lock-forming quality; complying with ASTM A 653/A 653M. Galvanizing: 1-1/4 ounces per square foot total both sides; ducts to have mill-phosphatized finish for surfaces exposed to view.

C. Reinforcement Shapes and Plates: Galvanized-steel reinforcement where installed on galvanized sheet metal ducts; compatible materials for aluminum and stainless-steel ducts.

D. Tie Rods: Galvanized steel, 1/4-inch minimum diameter for lengths 36-inches or less; 3/8-inch minimum diameter for lengths longer than 36-inches.

2.02 BACKDRAFT DAMPERS

A. Manufacturers:

1. Air Balance

2. Cesco

3. Greenheck

4. Nailor

5. Ruskin

B. Basis-of-Design: Ruskin CB D6.

C. Description: Multiple-blade gravity balanced with center pivoted blades with sealed edges, assembled in rattle free manner with 90-degree stop, adjustment device to permit setting for varying differential static pressure.

D. Frame: 0.125-inch thick 6063-T5 extruded aluminum channel with galvanized steel braces at mitered corners. Provide mounting flange.

E. Blades: Single piece, overlap frame, parallel action, horizontal orientation, minimum 0.07-inch 6063-T5 extruded aluminum material, maximum 6-inch width.

F. Bearings: Corrosion-resistant synthetic, formed as single piece with axles.

G. Blade Seals: Extruded vinyl, mechanically attached to blade edge.

H. Blade Axles: Corrosion-resistant, synthetic formed as single piece with bearings, locked to blade.

I. Tie Bars and Brackets: Galvanized steel.

J. Return Spring: Adjustable tension.

K. Damper Capacity:

1. Closed Position: Maximum back pressure of 16-inches water gauge.

2. Open Position: Maximum air velocity of 2,500-feet per minute.

L. Counterbalances: Adjustable zinc plated steel weights mechanically attached to blade. Must be capable of operating over wide range of pressures.

M. Finish: Mill aluminum.

N. Temperature Rating: -40 degrees F to 200 degrees F.

O. Operation of Blade:

1. Start to Open: 0.01-inch wg

2. Fully Open: 0.05-inch.

P. Pressure Drop: Maximum 0.15-inch wg at 1,500-feet per minute through 24-inch by 24-inch damper.

Q. Factory Sleeve: Minimum 20 gauge thickness, 12-inches in length.

R. Screen: At outdoor intake or discharge. 1/4-inch aluminum.

2.03 DAMPERS

A. Manufacturers:

1. Air Balance

2. Cesco

3. Greenheck

4. Nailor

5. Ruskin

B. Basis-of-Design:

1. Rectangular ductwork for velocities and pressures up to 1,500 fpm and 2.5-inch wg, respectively: Ruskin MD-35.

2. Rectangular ductwork for velocities and pressures up to 3,000 fpm and 4-inch wg, respectively: Ruskin CD-60.

3. Round ductwork for velocities and pressures up to 3,000 fpm and 4-inch wg, respectively: Ruskin CDSR-15.

C. General Description: Factory fabricated, with required hardware and accessories. Stiffen damper blades for stability. Include locking device to hold single-blade dampers in a fixed position without vibration. Close duct penetrations for damper components to seal duct consistent with pressure class.

1. Pressure Classes of 3-Inch wg (750 Pa) or Higher: End bearings or other seals for ducts with axles full length of damper blades and bearings at both ends of operating shaft.

D. Rectangular Volume Dampers: Multiple- or single-blade, parallel- or opposed-blade design with linkage concealed in frame and suitable for horizontal or vertical applications.

1. Steel Frames: Hat-shaped, galvanized sheet steel channels, minimum 16 gauge thick, with mitered and welded corners; frames with flanges where indicated for attaching to walls and flangeless frames where indicated for installing in ducts.

a. Roll-Formed Steel Blades: Galvanized sheet steel, 16 gauge thick for velocities up to 1,500 fpm, and 14 gauge thick for velocities up to 3,000 fpm.

b. Blade Axles: Minimum 1/2-inch diameter, plated steel, hex shaped, mechanically attached to blade.

c. Bearings: Molded synthetic sleeve, turning in extruded hole in frame.

d. Tie Bars and Brackets: Galvanized steel.

e. Mill galvanized.

E. Round Volume Dampers: Single-blade suitable for horizontal or vertical applications.

1. Steel Frames: Galvanized, roll formed, minimum of 20 gauge thick with beads at each end.

2. Blades: Minimum 14 gauge thick, galvanized sheet steel, round, single-piece.

3. Blade Axles: Minimum 1/2-inch square, plated steel, mechanically attached to blade.

4. Bearings: Molded synthetic sleeve, turning in hole in frame.

5. Finish: Mill galvanized.

6. Capacity:

a. Closed Position: Maximum pressure of 4-inches wg.

b. Open Position: Maximum air velocity of 3,000-feet per minute.

7. Leakage: Maximum 20 cfm at 4-inches wg.

8. Pressure Drop: Maximum 0.02-inch wg at 1,500-feet per minute through 20-inch diameter dampers.

F. Jackshaft: 1-inch diameter, galvanized-steel pipe rotating within pipe-bearing assembly mounted on supports at each mullion and at each end of multiple-damper assemblies.

1. Length and Number of Mountings: Appropriate to connect linkage of each damper in multiple-damper assembly.

2. Damper Hardware: Zinc-plated, die-cast core with dial and handle made of 3/32-inch thick zinc-plated steel, and a 3/4-inch hexagon locking nut. Include center hole to suit damper operating-rod size. Include 2-inch elevated platform for insulated duct mounting.

2.04 CONCEALED DAMPER HARDWARE

A. Manufacturers:

1. Young Regulator Company

B. Concealed Damper Hardware: For dampers above non-removable ceilings (gyp, plaster, decorative, etc.) where access panels have not been shown on Architectural drawings or in locations where dampers are more than 2-feet above the ceiling, provide:

1. Concealed Damper Regulator: Young Regulator Company Model 315 or approved equivalent.

2. Cable System: Young Regulator Company or approved equivalent.

3. Controller: Young Regulator Company 270-275 or approved equivalent.

4. Control wrenches, wire stops, casing nuts, and stainless steel wire.

5. Paint cover plate to match ceiling color or as directed by Architect.

2.05 ACCESS DOORS

A. Manufacturers:

1. Ductmate

2. Cesco

3. Ruskin

4. Nailor

5. Outdoor Installation: Karp MX insulated exterior access door.

B. Duct Pressure Class 2-inch WC and Greater: Sandwich-type design with threaded locking bolt assembly. Closed cell neoprene gasket permanently bonded to inside panel. Zinc-coated steel wing nuts or polypropylene molded knobs with threaded metal inserts - zinc coated bolts sealed to inner panel.

C. Duct Pressure Class 1-1/2-inch WC and Less: Galvanized steel assembly incorporating frame, door, hinges, and latch(es). Frame tabbed for attachment to duct panel. Double wall door panel with 1-inch insulation. Open cell neoprene gasket attached to frame. Cam latches for tight closure.

D. Plenum Doors: Extruded aluminum frames with extruded santoprene seals. Double-wall 20 gauge galvanized steel door panel with fiberglass insulation.

E. Size: Maximum size available to fit rectangular duct panel dimension or round duct diameter. Plenum doors minimum 2-feet wide by 4-feet high.

F. For outdoor installation, only provide waterproof access doors installed vertically.

2.06 DUCT TEST HOLES

A. Manufacturers:

1. Ventlok

B. Temporary Test Holes: Cast iron or cast aluminum to suit duct material, including screw cap and gasket. Size to allow insertion of pitot tube and other testing instruments and of length to suit duct insulation thickness.

C. Permanent Test Holes (where shown on Drawings): Factory fabricated, air tight flanged fittings with screw cap. Provide extended neck fittings to clear insulation.

2.07 TURNING VANES

A. Manufacturers:

1. Aerodyne

2. Ductmate Industries

3. Duro Dyno Corp.

4. Metalaire Inc.

B. Fabricate to comply with SMACNA's "HVAC Duct Construction Standards--Metal and Flexible" for vanes and vane runners. Vane runners to automatically align vanes.

C. Manufactured Turning Vanes: For medium pressure ductwork, ductwork upstream of terminal units, and in ductwork with equal inlet width and height dimensions and outlet width and height dimension, provide double thickness airfoil turning vanes. Low pressure ductwork and ductwork downstream of terminal units use either single thickness or double thickness turning vanes. For mitered rectangular elbows with changes in size from inlet to outlet, only use single thickness turning vanes. Use 2-inch radius vanes spaced on centers of 1.5-inches for single thickness. Use 2-inch radius vanes spaced on centers of 2.125-inches for double thickness.

D. Acoustic Turning Vanes: Fabricate airfoil-shaped aluminum extrusions with perforated faces and fibrous-glass fill.

2.08 FLEXIBLE CONNECTORS

A. Manufacturers:

1. Duro Dyne Corp.

2. Ventfabrics Inc.

3. Ductmate Industries

4. Hardcast

B. General Description: Flame-retardant or noncombustible fabrics, coatings, and adhesives complying with UL 181, Class 1.

C. Metal-Edged Connectors: Factory fabricated with a fabric strip 4-inches wide attached to two strips of 2-3/4-inch wide, 0.028-inch thick, galvanized sheet steel or 0.032-inch thick aluminum sheets. Select metal compatible with ducts.

D. Provide a spring and bracket assembly to reinforce the fabric with sufficient tension to prevent connector collapse under negative or positive pressure. Number and positioning of spring-link fixture to be determined by the manufacturer to maintain straight axis and without kinks between two sections of duct, or between duct and the moving element. Hardcast Spring-Link SL-200, or equal.

E. Indoor System, Flexible Connector Fabric (FC-I): Glass fabric double coated with neoprene.

1. Minimum Weight: 30 ounces per square yard.

2. Tensile Strength: 395 pounds of force per inch in the warp and 255 pounds of force per inch in the filling.

3. Service Temperature: -40 degrees F to 200 degrees F.

PART 3 - EXECUTION

3.01 DUCT ACCESSORIES GENERAL INSTALLATION

A. Inspect areas to receive air duct accessories. Notify Engineer of conditions that would adversely affect the installation of the dampers. Do not proceed until conditions are corrected.

B. Install duct accessories according to applicable details in SMACNA's "HVAC Duct Construction Standards--Metal and Flexible" for metal ducts.

C. Provide duct accessories of materials suited to duct materials; use galvanized-steel accessories in galvanized-steel, stainless-steel accessories in stainless-steel ducts, and aluminum accessories in aluminum ducts.

D. Do not compress or stretch damper frames into duct or opening.

E. Handle dampers using sleeve or frame. Do not lift dampers using blades, actuators, or jack shafts.

F. Adjust duct accessories for proper settings.

3.02 SHEET METAL MATERIALS INSTALLATION

A. Install bracing for multiple sections to support assembly weights and hold against system pressure. Install bracing as needed.

3.03 BACKDRAFT DAMPERS INSTALLATION

A. Install backdraft dampers on exhaust fans or exhaust ducts nearest to outside and where indicated. Provide at outside air intakes where motorized dampers are not shown on drawings.

3.04 DAMPERS INSTALLATION

A. Where installing volume dampers in ducts with liner, avoid damage to and erosion of duct liner.

B. Provide balancing dampers at points on supply, return, and exhaust systems where branches lead from larger ducts for air balancing. Install at a minimum of two duct widths from each branch takeoff. Provide balancing dampers for all air inlets and outlets.

C. Install dampers square and free from racking with blade running horizontally.

3.05 CONCEALED DAMPER HARDWARE INSTALLATION

A. Coordinate location in Reflected Ceiling Plan and color of concealed damper hardware with Architect prior to installation.

3.06 ACCESS DOORS INSTALLATION

A. Install duct access doors to allow for inspecting, adjusting, and maintaining accessories and terminal units as follows:

1. On both sides of duct coils.

2. Downstream from volume dampers, turning vanes and equipment.

3. Adjacent to fire or smoke dampers, providing access to reset or reinstall fusible links.

4. To interior of ducts for cleaning; before and after each change in direction, at maximum 50-foot (15-m) spacing.

5. Install the following sizes for duct-mounting, rectangular access doors:

a. One-Hand or Inspection Access: 8-inches by 5-inches.

b. Two-Hand Access: 12-inches by 6-inches.

c. Head and Hand Access: 18-inches by 10-inches.

d. Head and Shoulders Access: 21-inches by 14-inches.

e. Body Access: 25-inches by 14-inches.

f. Body Plus Ladder Access: 25-inches by 17-inches.

6. Install the following sizes for duct-mounting, round access doors:

a. One-Hand or Inspection Access: 8-inches in diameter.

b. Two-Hand Access: 10-inches in diameter.

c. Head and Hand Access: 12-inches in diameter.

d. Head and Shoulders Access: 18-inches in diameter.

e. Body Access: 24-inches in diameter.

7. Label access doors.

3.07 DUCT TEST HOLES INSTALLATION

A. Provide test holes at fan inlets and outlets where indicated and where required for air testing and balancing.

3.08 TURNING VANES INSTALLATION

A. Vanes must be installed, eliminating every other vane is not allowed.

B. Single thickness vanes cannot be over 36-inches long without intermediate vane runner.

C. Install per SMACNA and fasten/support to prevent vibration, noise, and to maintain proper alignment at design velocity.

3.09 FLEXIBLE CONNECTORS INSTALLATION

A. Install flexible connectors immediately adjacent to equipment in ducts associated with fans and motorized equipment supported by vibration isolators. Provide sheet metal weather cover over flexible connections located outdoors. Attach sheet metal to either equipment side or ductwork side, but not both.

B. Per NFPA, do not use flexible connectors on grease exhaust fans.

C. Securely attach spring-lock brackets to the metal strips of the connector collar using No. 8 sheet metal screws.

D. For fans developing static pressures of 5-inch wg and higher, cover flexible connectors with loaded vinyl sheet held in place with metal straps.

E. Adjust the following types in the following locations:

1. FC-I: Indoors.

END OF SECTION

(THIS PAGE LEFT BLANK INTENTIONALLY)

SECTION 23 34 00

HVAC FANS

PART 1 - GENERAL

1.01 SUMMARY

A. Work Included:

1. In-Line Centrifugal Fans

1.02 RELATED SECTIONS

A. Contents of Division 23, HVAC and Division 01, General Requirements apply to this Section.

1.03 REFERENCES AND STANDARDS

A. References and Standards as required by Section 23 00 00, HVAC Basic Requirements and Division 01, General Requirements.

1.04 SUBMITTALS

A. Submittals as required by Section 23 00 00, HVAC Basic Requirements and Division 01, General Requirements.

B. In addition, provide:

1. Certified fan performance curves with system operating conditions indicated.

2. Certified fan sound-power ratings.

3. Motor ratings and electrical characteristics, plus motor and electrical accessories.

4. Material gauges and finishes, including color charts.

5. Dampers, including housings, linkages, and operators.

1.05 QUALITY ASSURANCE

A. Quality assurance as required by Section 23 00 00, HVAC Basic Requirements and Division 01, General Requirements.

B. In addition, meet the following:

1. Motors: Premium efficiency per Section 23 05 13, Common Motor Requirements for HVAC Equipment. Electrically Commutated Motors (ECM) where scheduled on Drawings.

2. Sound power levels as scheduled on Drawings. If not scheduled, within 5 percent of Basis of Design at design flow.

3. Project Altitude: Base air ratings on sea-level conditions for project sites below 2,000 feet in elevation. Base air ratings on actual site elevations for project sites above 2,000 feet in elevation.

4. Operating Limits: Classify according to AMCA 99.

5. Electrical Components, Devices, and Accessories: Listed and labeled as defined in NFPA 70, Article 100, by a testing agency acceptable to authorities having jurisdiction, and marked for intended use.

6. AMCA Compliance: Products are to comply with performance requirements and are to be licensed to use the AMCA-Certified Ratings Seal.

7. NEMA Compliance: Motors and electrical accessories are to comply with NEMA standards.

8. UL Standard: HVAC Fans are to comply with UL 705. Fans used in grease exhaust applications are to be UL 762 listed for grease exhaust.

1.06 WARRANTY

A. Warranty of materials and workmanship as required by Section 23 00 00, HVAC Basic Requirements and Division 01, General Requirements.

1.07 DELIVERY, STORAGE, AND HANDLING

A. Deliver fans as factory-assembled unit, to the extent allowable by shipping limitations, with protective crating and covering.

B. Disassemble and reassemble units, as required for moving to final location, according to manufacturer's written instructions.

C. Lift and support units with manufacturer's designated lifting or supporting points.

1.08 COORDINATION

A. Coordinate size and location of structural-steel support members.

B. Coordinate size and location of concrete bases. Cast anchor-bolt inserts into bases.

C. Coordinate installation of roof curbs, equipment supports, and roof penetrations.

1.09 EXTRA MATERIALS

A. Furnish extra materials described below that match products installed and that are packaged with protective covering for storage and identified with labels describing contents. Belts: One set for each belt-driven unit.

PART 2 - PRODUCTS

2.01 IN-LINE CENTRIFUGAL FANS

A. Manufacturers:

1. Greenheck

2. Cook

3. Twin City

B. Description: In-line centrifugal fans consisting of housing, wheel, outlet guide vanes, fan shaft, bearings, motor and disconnect switch, drive assembly, mounting brackets, and accessories.

C. Wheel: Cast aluminum backward inclined with inlet cone statically and dynamically balanced within its own bearings.

D. Housing:

1. Heavy gauge steel or aluminum housing, suitable for Fan Class, factory standard finish.

2. Removable panels for access to all interior components.

3. Horizontal or vertical configuration, as indicated.

4. Inlet and discharge duct collars.

5. 1-inch thick, 1.5 pounds per cubic foot density fiberglass liner.

6. Aluminum straightening vanes.

7. Support bracket adaptable to floor, sidewall, or ceiling mounting.

E. Bearings and Drives:

1. Bearings: Heavy duty pillow block type, self greasing ball bearings with ABMA 9 life at 50,000 hours.

2. Shafts: Hot rolled steel, ground and polished, with keyway, protectively coated with lubricating oil.

3. Drive: Direct drive matched to fan loads with speed controller. Motor encased in housing outside of airstream, factory wired to disconnect switch located on outside of fan housing.

a. Electrically Commutated Motor (ECM) where indicated on Fan Schedule on Drawings.

F. Accessories:

1. Variable-Speed Controller: Provide solid-state control to reduce speed from 100 percent to less than 50 percent for motors 1/2 HP or smaller.

G. Vibration isolation as scheduled and specified. Reference Section 23 05 48, Vibration and Seismic Controls for HVAC Piping and Equipment.

1. Motor: Integrally mounted, 1800 RPM maximum, with pre-lubricated sealed ball bearings. ODP for motors located indoors and TEFC for motors exposed to moisture.

PART 3 - EXECUTION

3.01 GENERAL INSTALLATION REQUIREMENTS

A. Install in accordance with manufacturer's instructions.

B. Install power ventilators level and plumb.

C. Install floor-mounting units on concrete bases.

D. Units using vibration isolation devices are scheduled on Drawings.

E. Support suspended units from structure threaded steel rods and vibration isolation device scheduled on Drawings.

F. In seismic zones, restrain support units.

G. Install units with clearances for service and maintenance.

H. Provide fixed sheaves required for final air balance.

I. Provide safety screen where inlet or outlet is exposed.

J. Pipe scroll drains to nearest floor drain.

K. Provide backdraft dampers on discharge of exhaust fans and as indicated on Drawings.

L. Duct installation and connection requirements are specified in other Division 23, HVAC Sections. Drawings indicate general arrangement of ducts and duct accessories. Make final duct connections with flexible connectors per Section 23 33 00, Air Duct Accessories.

M. Install ducts adjacent to power ventilators to allow service and maintenance.

N. Ground equipment.

O. Tighten electrical connectors and terminals according to manufacturer's published torque-tightening values. If manufacturer's torque values are not indicated, use those specified in UL 486A and UL 486B.

P. Equipment Startup Checks:

1. Verify that shipping, blocking, and bracing are removed.

2. Verify that unit is secure on mountings and supporting devices and that connections to ducts and electrical components are complete. Verify that proper thermal-overload protection is installed in motors, starters, and disconnect switches.

3. Verify that cleaning and adjusting are complete.

4. Disconnect fan drive from motor, verify proper motor rotation direction, and verify fan wheel free rotation and smooth bearing operation. Reconnect fan drive system, align and adjust belts, and install belt guards.

5. Verify lubrication from bearings and other moving parts.

6. Verify that manual and automatic volume control and fire and smoke dampers in connected ductwork systems are in fully open position.

7. Disable automatic temperature-control operators.

Q. Starting Procedures:

1. Energize motor and adjust fan to indicated rpm.

2. Measure and record voltage and amperage.

R. Operational Test: After electrical circuitry has been energized, start units to confirm proper motor rotation and unit operation. Remove malfunctioning units, replace with new units, and retest.

S. Test and adjust controls and safeties. Replace damaged and malfunctioning controls and equipment.

T. Shut unit down and reconnect automatic temperature-control operators.

U. Replace fan and motor pulleys as required to achieve design airflow.

V. Provide totally enclosed fan cooled motors when motor is located outdoors, whether under a cover or not, or exposed to moisture. Provide protective covering for electronically commutated motors located in outdoor or wet/wash-down locations.

W. Repair or replace malfunctioning units. Retest as specified above after repairs or replacements are made.

X. Adjust damper linkages for proper damper operation.

Y. Adjust belt tension.

Z. Lubricate bearings.

AA. On completion of installation, internally clean fans according to manufacturer's written instructions. Remove foreign material and construction debris. Vacuum fan wheel and cabinet.

BB. After completing system installation, including outlet fitting and devices, inspect exposed finish. Remove burrs, dirt, and construction debris and repair damaged finishes.

CC. Engage a factory-authorized service representative to train Owner's maintenance personnel to adjust, operate, and maintain HVAC fans. Train Owner's maintenance personnel on procedures and schedules for starting and stopping, troubleshooting, servicing, and maintaining equipment and schedules.

END OF SECTION

(THIS PAGE LEFT BLANK INTENTIONALLY)

SECTION 23 37 00

AIR OUTLETS AND INLETS

PART 1 - GENERAL

1.01 SUMMARY

A. Work Included:

1. Grilles, Registers, Diffusers
2. Louvers

1.02 RELATED SECTIONS

A. Contents of Division 23, HVAC and Division 01, General Requirements apply to this Section.

1.03 REFERENCES AND STANDARDS

A. References and Standards as required by Section 23 00 00, HVAC Basic Requirements and Division 01, General Requirements.

1.04 SUBMITTALS

A. Submittals as required by Section 23 00 00, HVAC Basic Requirements and Division 01, General Requirements.

B. In addition, provide:

1. Data Sheet: For each type of air outlet and inlet, and accessory furnished; indicate construction, finish, and mounting details.
2. Performance Data: Include throw and drop, static-pressure drop, and noise ratings for each type of air outlet and inlet.
3. Schedule of diffusers, registers, and grilles indicating drawing designation, room location, quantity, model number, size and accessories furnished.

1.05 QUALITY ASSURANCE

A. Quality assurance as required by Section 23 00 00, HVAC Basic Requirements and Division 01, General Requirements.

B. In addition, meet the following:

1. Air Distribution Diffuser, Register, and Grille Schedule lists Basis of Design, with any specialty accessories, construction, finish or other criteria noted on schedule. Submitted air distribution must match criteria of Basis of Design:
   a. Construction materials and appearance.
   b. Frame/installation method.
   c. Isothermal throw plus or minus 5 percent at design flows shown on drawings.
   d. Noise Criteria: NC value plus or minus 1 at design flows shown on drawings.

e. Accessories: Equal to Basis of Design.

1.06 WARRANTY

A. Warranty of materials and workmanship as required by Section 23 00 00, HVAC Basic Requirements and Division 01, General Requirements.

PART 2 - PRODUCTS

2.01 MANUFACTURERS

A. General: Manufacturer's standard products of categories and types required for each application as referenced in other Division 23, HVAC sections, where more than a single type is specified for the application, provide single selection for each product category.

B. Grilles, Registers, Diffusers:

1. Carnes
2. Environmental Air Products
3. Krueger
4. Metalaire
5. Nailor
6. Price Co.
7. Titus
8. Or approved equivalent.

C. Louvers:

1. Ruskin Manufacturing
2. Pottorff
3. Carnes
4. Cesco
5. Greenheck
6. Or approved equivalent.

2.02 GRILLES, REGISTERS, DIFFUSERS

A. Diffuser, Register and Grille Schedule lists Basis of Design, with specialty accessories, construction, finish or other criteria noted on schedule. Submitted air distribution must match criteria of Basis of Design, including accessories and finish:

1. Matching construction materials and appearance. Equal installation method/frame.
2. Pressure drop equal to or less than Basis of Design at CFM on Drawings.
3. Throw: Isothermal jet throw plus or minus 5 percent of Basis of Design at CFM listed on Drawings.

4. Noise Criteria: Plus or minus 1 NC of Basis of Design at CFM listed on Drawings. If Basis of Design NC is below registered level, submitted must match. NC rating with 10 dB room factor or less.

B. Provide 1-, 2-, 3-, or 4-way deflection as indicated on Drawings.

C. Provide pattern controllers for linear supply air diffusers.

D. Register Dampers: Dampers utilized with grilles. Opposed blade dampers utilizing a side operated worm drive which provides external duct operation. Slot the end of the shaft to receive a screwdriver. Factory assembled side operator. Construct of the same material as the grille. Manufacturer same as grilles/diffuser.

E. Coordinate mounting frames with ceiling construction type. Verify per reflected ceiling plans.

2.03 LOUVERS

A. General: Frame and sill styles compatible with adjacent substrate, specifically manufactured to fit into construction openings with accurate fit and adequate support for weatherproof installation. Reference Drawings and Specifications for types of substrate which will contain each type of louver. Construct of aluminum extrusions, ASTM B221, Alloy 6063-T5. Weld units or use stainless steel fasteners. On inside face of exterior louvers, provide anodized aluminum wire bird screen mounted in removable extruded aluminum frames. AMCA licensed performance ratings.

B. Blades set 3 to 5-inches on center, 37.5 degree angle with rain hook on blade, minimum blade thickness 0.080-inch, drainable blade style. Minimum 57 percent free area for 48- by 48-inch unit. Maximum water penetration 0.01 ounce water psf free area at 1000 FPM. Maximum intake pressure drop of 0.10-inch wg at 750 FPM free velocity. Provide downspouts in jambs, designed to drain water from louver for minimum water cascade from blade to blade. Provide drain gutter in head frame and each blade.

C. Reference Drawings for free area required.

D. Provide access door in duct to clean birdscreen.

E. Finish: Factory Kynar 500 fluoropolymer spray finish; color to be selected by Architect. Conform to AAMA 605.2. Apply coating following cleaning, and pretreatment. Dry louvers before final finish application. 1.2 mils total dry film thickness when baked at 450 degrees F for ten minutes.

PART 3 - EXECUTION

3.01 GENERAL INSTALLATION

A. Install in accordance with manufacturer's instructions. Provide seismic supports, clips, and bracing per local code. Coordinate installation of framing. Provide complete coverage of rough openings by integral device flanges or auxiliary frames. Where above ceiling location is unconditioned space, caulk rough openings; repair and re-paint locations where dust entrainment streaks develop due to unsealed openings.

B. Damp locations, such as lockers, restrooms, showers, natatoriums, whirlpool/spas, to have aluminum construction even if scheduled otherwise; mounting hardware to be stainless steel.

C. Check location of outlets and inlets and make necessary adjustments in position to conform with architectural features, symmetry, and lighting arrangement.

D. Unless otherwise shown on drawings, for ceiling mounted air outlets with adjustable airflow pattern controllers mounted at a height of 12 feet or less, adjust the air outlets for horizontal air distribution, and adjust to vertical air distribution for ceiling height above 12 feet.

E. Exterior color of grilles per Architect. White finish if not otherwise scheduled or noted by Architect. Paint ductwork visible behind air outlets and inlets matte black.

F. Ceiling Membrane: Protect ceiling membrane per code. Fire caulk around openings. Provide listed radiation damper in rated roof/ceiling or floor/ceiling assemblies as required per code.

G. After installation of diffusers, registers, and grilles, inspect exposed finish. Clean exposed surfaces to remove burrs, dirt, and smudges. Replace diffusers, registers, and grilles that have damaged finishes.

3.02 GRILLES, REGISTERS AND DIFFUSERS INSTALLATION

A. Coordinate with Architectural Reflected Ceiling Plan(s). Reflected ceiling plans determine final locations.

B. Install diffusers to ductwork with air tight connection. 18-inch straight duct section or acoustic plenum at connection. Provide square to round adapters where required for connection to round ducts.

C. Provide integral balancing dampers for diffusers, and grilles and registers where duct manual balancing dampers are not shown or specified.

END OF SECTION

SECTION 23 40 00

HVAC AIR CLEANING DEVICES

PART 1 - GENERAL

1.01 SUMMARY

A. Work Included:

1. Disposable Panel Filters

1.02 RELATED SECTIONS

A. Contents of Division 23, HVAC and Division 01, General Requirements apply to this Section.

B. In addition, reference the following:

1. Division 01, General Requirements, Temporary Facilities and Controls: Filters for temporary heating and ventilating.

2. Division 26, Electrical, Equipment Wiring: Electrical characteristics and wiring connections.

1.03 REFERENCES AND STANDARDS

A. References and Standards as required by Section 23 00 00, HVAC Basic Requirements and Division 01, General Requirements.

B. In addition, meet the following:

1. ANSI/AHRI 850 I-P - Performance Rating of Commercial and Industrial Air Filter Equipment.

2. ASHRAE Std 52.1 - Gravimetric and Dust-Spot Procedures for Testing Air Cleaning Devices Used in General Ventilation for Removing Particulate Matter; American Society of Heating, Refrigerating and Air-Conditioning Engineers, Inc.

3. ASHRAE Std 52.2 - Method of Testing General Ventilation Air-Cleaning Devices for Removal Efficiency by Particle Size; American Society of Heating, Refrigerating and Air-Conditioning Engineers, Inc.

4. MIL-STD-282 - Filter Units, Protective Clothing, Gas-Mask Components, and Related Products: Performance-Test Methods; Military Specifications and Standards.

5. UL 586 - High Efficiency, Particulate, Air Filter Units; Underwriters Laboratories Inc.

6. UL 867 - Electrostatic Air Cleaners; Underwriters Laboratories Inc.

7. UL 900 - Standard for Air Filter Units; Underwriters Laboratories Inc.

1.04 SUBMITTALS

A. Submittals as required by Section 23 00 00, HVAC Basic Requirements and Division 01, General Requirements.

B. In addition, provide:

1. Product Data: Provide data on filter media, filter performance data, filter assembly and filter frames, dimensions, motor locations and electrical characteristics and connection requirements.

2. Shop Drawings: Indicate filter assembly and filter frames, dimensions, motor locations, and electrical characteristics and connection requirements.

3. Manufacturer's Installation Instructions: Indicate assembly and change-out procedures.

4. Operation and Maintenance Data: Include instructions for operation, changing, and periodic cleaning.

5. Maintenance Materials: Furnish the following for Owner's use in maintenance of project.

a. See Division 01, General Requirements for additional provisions.

b. Extra Filters: One set of each type and size.

1.05 QUALITY ASSURANCE

A. Quality assurance as required by Section 23 00 00, HVAC Basic Requirements and Division 01, General Requirements.

B. In addition, meet the following:

1. Products Requiring Electrical Connection: Listed and classified by Underwriters Laboratories Inc. as suitable for the purpose specified and indicated.

1.06 WARRANTY

A. Warranty of materials and workmanship as required by Section 23 00 00, HVAC Basic Requirements and Division 01, General Requirements.

1.07 PERFORMANCE REQUIREMENTS

A. Conform to ANSI/AHRI 850 I-P - Performance Rating of Commercial and Industrial Air Filter Equipment, Section 7.4.

1. Dust Spot Efficiency: Plus or minus 5 percent.

PART 2 - PRODUCTS

2.01 MANUFACTURERS

A. Filters:

1. American Filtration Inc.

2. AAF International/American Air Filter

3. Camfil Farr Company

4. Eco-Air Products

5. Filtration Group

6. Flanders Corporation

2.02 DISPOSABLE PANEL FILTERS

A. Media: UL 900 Class 2, fiber blanket, factory sprayed with flameproof, non-drip, non-volatile adhesive.

1. Nominal Size: 12 x 24-inches.

2. Thickness: 2-inch.

B. Performance Rating:

1. Face Velocity: 500 FPM.

2. Face Velocity: 350 FPM (2.54 m/sec).

3. Initial Resistance: 0.15-inch WG.

4. Initial Resistance: 0.23-inch WG (37 Pa).

5. Recommended Final Resistance: 0.50-inches WG.

6. MERV Rating: 8.

C. Holding Frames: 20 gauge minimum galvanized steel frame with expanded metal grid on outlet side and steel rod grid on inlet side, hinged with pull and retaining handles.

PART 3 - EXECUTION

3.01 GENERAL INSTALLATION REQUIREMENTS

A. Install air cleaning devices in accordance with manufacturer's instructions.

B. Prevent passage of unfiltered air around filters with felt, rubber, or neoprene gaskets.

C. Furnish and install filter gauge static pressure tips upstream and downstream of filters. Mount filter gauges on outside of filter housing or filter plenum, in accessible position/location. Adjust and level.

D. Operation During Construction: If air handlers are operated during construction, provide treated 2-inch media construction filter in front of prefilters and replace periodically to prevent dirt carryover. Install clean prefilters prior to air balancing.

E. Do not operate fan system until filters (temporary or permanent) are in place. Replace temporary filters used during construction and testing, with clean set.

F. Provide filter gauges on filter banks, installed with separate static pressure tips upstream and downstream of filters.

END OF SECTION

(THIS PAGE LEFT BLANK INTENTIONALLY)

SECTION 23 81 26

SMALL SPLIT SYSTEM AND UNITARY HVAC EQUIPMENT

PART 1 - GENERAL

1.01 SUMMARY

A. Work Included: Materials, installation and testing of:

1. Split System Condensing Unit
2. Split System Indoor Fan Coil Unit

1.02 RELATED SECTIONS

A. Contents of Section 23 00 00, HVAC Basic Requirements and Division 1, General Requirements apply to this Section.

1.03 REFERENCES AND STANDARDS

A. References and Standards as required by Section 23 00 00, HVAC Basic Requirements and Division 1, General Requirements.

B. In addition, meet the following:

1. AHRI 210/240 - Performance Rating of Unitary Air-Conditioning and Air-Source Heat Pump Equipment.

1.04 SUBMITTALS

A. Submittals as required by Section 23 00 00, HVAC Basic Requirements and Division 1, General Requirements.

1.05 QUALITY ASSURANCE

A. Quality assurance as required by Section 23 00 00, HVAC Basic Requirements and Division 1, General Requirements.

B. In addition, meet the following:

1. Efficiency ratings, cooling/heating performance, fan performance, sound performance to meet or exceed Basis of Design as scheduled on Drawings.

1.06 WARRANTY

A. Warranty of materials and workmanship as required by Section 23 00 00, HVAC Basic Requirements and Division 1, General Requirements.

B. In addition, provide:

1. Refrigeration compressor(s): 5-year warranty.

PART 2 - PRODUCTS

2.01 SPLIT SYSTEM CONDENSING UNIT

A. Manufacturers:

1. Trane

2. York

3. Carrier

4. Daikin

5. Or approved equivalent.

B. Description: Cooling operation, Energy Star labeled. Unit matched to indoor evaporator fan unit, vibration isolators, and low ambient operation to 40 degrees F.

C. Cabinet: Fabricated of galvanized steel and finished with powder coated baked enamel with Hail Guard.

D. Refrigeration System:

1. HFC Refrigerant or other refrigerant with zero ozone depletion potential (ODP).

2. Hermetically sealed compressor, high efficiency, 2-stage operation (if equipped), variable speed compressor, integral high/low pressure and temperature protection, liquid line filter dryer.

3. Options:

a. Long line accessory kit.

b. Solenoid valve.

c. Crankcase heater.

E. Condenser Air System:

1. Condenser Fan: Propeller type with direct drive motor, low sound generator, variable speed condenser fan.

2. Condenser Fan Motor: Premium efficiency, permanently lubricated, totally enclosed with built-in current and thermal overload protection.

3. Condenser Coil: Copper tubes mechanically bonded into aluminum fins.

a. Provide corrosion protection coating.

b. Provide Hail Guard.

F. Condensate: Collection in galvanized steel drain pan sloped to drain away from the unit.

G. Controls: Completely internally wired, microprocessor, high and low pressure cutouts, contractors and internal overload protection on all motors. Provide low ambient operation to 40 degrees F outside to maintain condensing temperature on part load operation. Provide anti-short cycle timer and time delay between compressor operation.

2.02 SPLIT SYSTEM INDOOR FAN COIL UNIT

A. Manufacturers:

1. Trane

2. York

3. Carrier

4. Daikin

5. Or approved equivalent.

B. Indoor fan unit matched to outdoor condensing unit. Self-contained, packaged, factory-assembled, pre-wired unit with direct expansion evaporator coil, cabinet supply fan, filter housing and controls. Accessories, economizer assembly, etc. as scheduled and shown on Drawings.

C. Components:

1. Steel cabinet with baked enamel finish or galvanized steel; minimum 1/2-inch thick, 1-1/2# liner with cleanable facing or solid interior metal panel, filter housing suitable for 2-inch thick filter. Easily removed access panels.

2. Economizer/Mixing Box with damper actuator.

D. Refrigeration System: HFC Refrigerant or other refrigerant with zero ozone depletion potential (ODP).

E. Air System:

1. Supply Fan (Evaporator Fan): centrifugal ECM motor drive with internal vibration isolation.

2. Evaporator Motor: Premium efficiency with permanently lubricated bearings thermal overload protection. Provide optional high static motor.

3. Evaporator Coil: Seamless copper tubes expanded into aluminum fins. Galvanized or polymer drain pan sloped in all directions.

4. Filter: MERV 8, 2-inch thick, pleated, throw-away.

5. Supplemental Heat Coil:

a. Electric Heat Coil: UL Listed with helix wound bare nichrome wire heating elements. Heat output and staging as scheduled. Power usage per stage is not to exceed 5 kilowatts. Staging of coil heat internally controlled.

F. Condensate:

1. Secondary drain pan; condensate overflow shut-off float switch and external alarm.

G. Controls: Factory-wired to internal terminal strip or board for connection to programmable thermostat.

H. Electrical: Furnish magnetic contactors. Arrange for single point electrical connection. Provide all associated field wiring.

PART 3 - EXECUTION

3.01 GENERAL INSTALLATION REQUIREMENTS

A. Install with required clearances and access for maintenance.

B. Install factory furnished devices for field installation.

C. Inspect for and remove shipping bolts, blocks and tie-down straps.

D. After energizing units: Test units for proper fan rotation. Test and adjust controls and internal safeties. Replace malfunctioning units and retest.

E. Thoroughly clean exposed portions of equipment. Install new filters prior to final test and balance and again prior to final acceptance.

F. Provide vibration isolation: As scheduled.

G. Provide seismic restraint.

H. Condensate drain per manufacturer's piping diagram.

I. Condensate piped to indirect waste connection or exterior of building; cleanouts at changes of direction; sized and sloped to drain per Code. Secondary drain pan with float switch.

END OF SECTION

SECTION 23 82 00

TERMINAL HEAT TRANSFER EQUIPMENT

PART 1 - GENERAL

1.01 SUMMARY

A. Work Included:

1. Electric Unit Heater

1.02 RELATED SECTIONS

A. Contents of Division 23, HVAC and Division 01, General Requirements apply to this Section.

1.03 REFERENCES AND STANDARDS

A. References and Standards as required by Section 23 00 00, HVAC Basic Requirements and Division 01, General Requirements.

1.04 SUBMITTALS

A. Submittals as required by Section 23 00 00, HVAC Basic Requirements and Division 01, General Requirements.

1.05 QUALITY ASSURANCE

A. Quality assurance as required by Section 23 00 00, HVAC Basic Requirements and Division 01, General Requirements.

1.06 WARRANTY

A. Warranty of materials and workmanship as outlined in Section 23 00 00, HVAC Basic Requirements and Division 01, General Requirements.

PART 2 - PRODUCTS

2.01 ELECTRIC UNIT HEATER

A. Manufacturers:

1. Trane
2. Markel
3. Qmark
4. Chromalox
5. Modine
6. Indeeco
7. Reznor

B. Description: Electric unit heater wired internally for single point connection. Horizontal or vertical air delivery, complete with fan, motor, heavy gauge steel casing with adjustable

discharge louvers, mounting bracket, tubular finned heating element, automatic reset thermal overloads, and control circuit transformer. UL listed and wired per NEC.

C. Components:

1. Chassis: Fabricated of 14 gauge cold rolled steel with fan guard.

2. Heating Section: Liquid filled with low watt density immersion type copper sheathed elements hermetically sealed into the core made of steel with aluminum fins. Heat transfer fluid of ethylene glycol solution.

3. Supply Fan: Propeller type with aluminum blades, direct drive.

4. Supply Fan Motor: Permanently lubricated ball bearing type, 1750 RPM, open drip proof, same voltage and phase as heating element.

5. Outlet Grille: 14 gauge steel adjustable louvers with minimum position stops.

6. Mounting: Bracket(s) and appurtenances for wall mounting.

D. Control: Remote thermostat with summer fan switch. 24V control circuit.

PART 3 - EXECUTION

3.01 GENERAL INSTALLATION REQUIREMENTS

A. Avoid interference with structure and with work of other trades, preserving adequate headroom and clearing doors and passageways. Check each piece of equipment for defects, verifying that items function properly and that adjustments have been made.

B. Prior to acceptance, thoroughly clean exposed portions of terminal heat transfer equipment, remove shipping labels and traces of foreign substance. Touch up scratched surfaces of radiant panels with factory matching paint.

3.02 ELECTRIC UNIT HEATER INSTALLATION

A. Unit Heaters: Suspend from structure with 5/8-inch diameter rods.

B. Damaged Coils: Make every effort to prevent damage to both built-up coils and coils of packaged equipment. Comb damaged coil fins to be straight.

C. Suspend from structure with 5/8-inch diameter rods and per manufacturer instructions.

D. Install thermostat as shown on drawings. Provide control wiring from thermostat to unit.

END OF SECTION

SECTION 26 01 00

OPERATION AND MAINTENANCE OF ELECTRICAL SYSTEMS

PART 1 - GENERAL

1.01 SUMMARY

A. Section Includes:

1. Definitions.
2. General requirements.
3. Submittal procedures.
4. Content requirements for manuals.
5. Supplements.

1.02 DEFINITIONS

A. Maintenance Operation.

1. Routine operation required to ensure satisfactory performance and longevity of the equipment. Examples of typical maintenance operations are lubrication, belt tensioning, adjustment of pump packing glands and other routine adjustments.

1.03 GENERAL REQUIREMENTS

A. Provide operation and maintenance data for items listed in Supplement 26 01 00 – A, “Schedule of Equipment Requiring Operation and Maintenance Data”.

B. In addition to the composite of manuals for individual equipment items or systems, provide a consolidated summary of required routine scheduled maintenance and scheduled preventative and predictive maintenance for the project, with reference to where detailed information may be found. Include safety information and emergency plans and procedures. The summary shall be in a separate binder from the other equipment and system binders.

C. Comply with the following format relating to the Operation and Maintenance Manual:

1. All binders shall be “D” ring type with one-touch ring locking mechanism.
2. Overlay material shall be crystal clear poly.
3. Binders shall be black poly.
4. Binders shall be nominally sized for 75 percent fill per volume with a maximum binder depth of four (4) inches and a minimum depth of one (1) inch.
5. Submit example binder cover sheet for approval by ENGINEER.
6. Submit example spine insert for approval by ENGINEER.
7. Paper: twenty (20) pound minimum, white for typed pages, 8.5 x 11 inches.
8. Text: Manufacturer’s printed data, or neatly typewritten. Facsimiles transmitted via fax machine shall be unacceptable.

9. Three-hole punch data for binding and composition; arrange printing so that punched holes do not obliterate data.

10. Provide fly-leaf for each separate product, or each piece of operating equipment, with typed description of product and major component parts of equipment. Provide with heavy section dividers with numbered plastic index tabs.

11. Provide each manual with a title page, typed table of contents with consecutive page numbers. Plan contents of entire set, identified by volume number, in each binder.

12. Material shall be suitable for reproduction with quality equal to the original. Photocopying of material will be acceptable except for material containing photographs.

13. Table of contents shall be neatly typewritten, arranged in a systematic order, containing as a minimum the following data:

    a. CONTRACTOR, name of responsible principle, address and telephone number.

    b. List of each product required to be included and indexed to content of each volume.

    c. List of each product, name, address and telephone number of subcontractor, supplier, installer and maintenance contractor as appropriate.

    d. Provide local source and phone number of supply for parts and replacement.

    e. Identify each product by product name, model number and other identifying numbers or symbols as set forth in the Contract Documents.

14. Product data:

    a. Include only those sheets that are pertinent to the specific product provided.

    b. Clearly annotate each sheet to identify specific product or part installed, data applicable to the installation and delete references to inapplicable information.

15. Drawings; supplement product data with drawings as necessary to clearly illustrate the following:

    a. Relationship of component parts of equipment and systems.

    b. Control and flow diagrams.

    c. Coordinate drawings with project record documents to assure correct illustration of completed installations.

    d. CONTRACTOR shall not use project record documents as maintenance manual drawings.

    e. Provide reinforced punched binder tabs.

    f. Reduced 11 x 17 inch drawings shall be folded to 8.5 x 11 inch format.

    g. Where reduction to 11 x 17 inch is impractical, fold and place the 8.5 x 11 inch envelopes that are bound in the binder.

h. Identify specification Section and product on drawings and envelopes.

1.04 SUBMITTAL PROCEDURE

A. Compile the required data, arrange as specified herein and insert data in the number of volumes necessary. The volumes shall be submitted as a complete set. Partial or incomplete manuals shall be rejected by the ENGINEER

B. Preliminary Manuals:

1. Submit three copies to ENGINEER for review and approval well before the starting and adjusting activities commence.

2. If accepted:

a. One copy will be returned to the CONTRACTOR.

b. One copy will be forwarded to the OWNER.

c. One copy will be retained in the ENGINEER's file.

3. If rejected:

a. Two copies will be returned to the CONTRACTOR with ENGINEER's comments for revision.

b. One copy will be retained in the ENGINEER's file.

c. CONTRACTOR shall be required to resubmit three revised preliminary manuals for ENGINEER's review.

C. Final Manuals:

1. Submit two copies to ENGINEER for review and approval before final completion.

2. If accepted:

a. CONTRACTOR will be so notified.

b. CONTRACTOR shall provide a complete set of the final manual on CD-ROM. Data written specifically for the manual will be presented in MS Word format. Manufacturer data (per-printed data) will be presented in Adobe PDF format.

3. If rejected:

a. At the ENGINEER's discretion either all but one copy of the manuals will be returned to the CONTRACTOR for revisions or all copies will be retained by the ENGINEER and the necessary revision data will be requested from the CONTRACTOR.

1.05 CONTENT REQUIREMENTS FOR MANUALS

A. The Operation and Maintenance Manuals shall normally consist of no less than four volumes outline below.

B. Volume 1 – Facility Overview.

1. All sheets in volume 1 shall have sheet protectors.

2. All materials in volume 1 shall be copied onto a CD and provided to the ENGINEER.

3. Include instructions and procedures for handling, storage, maintenance during storage, assembly, erection, installation, adjusting, testing, operating, shut down in emergency, troubleshooting, maintenance, interface with other equipment and as may otherwise be required.

4. Organize in a consistent format under separate heading for each different procedure.

5. Provide a logical sequence of instructions for each procedure.

6. Provide an information sheet for the OWNER's personnel which include the proper procedures in the event of a failure and instances that might affect the validity of warranties or bonds.

7. Content for each unit (or common units) and system:

    a. Description of unit and component parts including controls, accessories and appurtenances. Detail their function, normal operating characteristics and limiting conditions. Provide performance curves, engineering data, nameplates data and test forms. Provide a complete commercial number and nomenclature for replaceable parts.

8. Operating Procedures:

    a. Start-up and break-in routine and normal operating instructions.
    b. Test procedures and results of factory tests where required.
    c. Regulation, control, stopping and emergency instructions.
    d. Description of operation sequence by control manufacturer.
    e. Shutdown instructions for both short and extended durations.
    f. Summer and winter operating instructions as applicable.

9. Maintenance and Overhaul Procedures:

    a. Routine operations
    b. Guide to troubleshooting.
    c. Disassembly, removal, repair, reinstallation and reassembly.

10. Installation Instructions including alignment, adjusting, calibrating and checking.

11. Original manufacturer's parts list, illustrations, detailed assembly drawings showing each part with part numbers and sequentially numbered parts list and diagrams required for maintenance.

12. Parts list by generic title and manufacturer's part number.

13. Name, location and telephone number of nearest supplier and spare parts warehouse.

14. Where applicable identify installed spares and other provisions for future work (e.g. reserved panel space, unused components, wiring and terminals).

15. Manufacturer's printed operating and maintenance instructions.

16. Charts of valve tag numbers along with the location and function of each valve.

17. Manufacturer's certifications including calibration data sheets and specified calibration procedures or methods for installed equipment.

18. Warranty forms and information for all installed equipment provided by the CONTRACTOR.

19. Circuit directories for all panels including electrical, control and communication.

20. List of adjustable electrical relay settings, control and alarm settings.

C. Volume 2 – Equipment Manuals.

1. Table of contents shall have a sheet protector

2. Table of contents and index sheets shall be of colored card stock.

3. Manuals for individual equipment shall not be divided between separate binders.

4. List function, normal operation, characteristics and limiting conditions.

5. Complete commercial part number and nomenclature of replaceable parts.

6. Maintenance procedures including routine operations, guide to troubleshooting and adjustments.

7. Manufacturer's printed operation and maintenance instructions.

8. List of manufacturer's spare parts and recommended quantities to be maintained in storage.

9. Contents for Maintenance Summary Manual:

a. Compile individual maintenance summaries for each applicable equipment item, respective unit or system and for components or subunits.

b. Format shall include use of the Supplement 26 01 00 – B "Maintenance Summary" provided. Each Maintenance Summary may take as many pages as required. Supplement shall be typewritten and shall include detailed lubrication instructions and diagrams showing points to be greased or oiled, recommended type, grade and temperature range of lubricants and frequency of lubrication.

c. Include a list and quantity of manufacturer's recommended consumable and spare parts that should be stored on site.

D. Volume 3 – Drawings

1. As-built drawings associated with the project shall be provided. This includes, but is not limited to, manufacturers supplied drawings. All drawings shall be provided on 11 x 17 inch sheets folded to 8.5 x 11 inch size and bound in this volume. A complete and detailed index shall be provided that includes a list of all drawings in the volume and the drawings shall be tabbed in a fashion that provides clear and concise identification.

PART 2 - PRODUCTS – NOT USED

PART 3 - EXECUTION

3.01 SUPPLEMENTS

A. Supplement 26 01 00 – A, “Schedule of Equipment Requiring Operation and Maintenance Data”.

B. Supplement 26 01 00 – B, “Maintenance Summary Form”.

END OF SECTION

SUPPLEMENT 26 01 00 – A

SCHEDULE OF EQUIPMENT REQUIRING

OPERATION AND MAINTENANCE DATA

Item No.	Section	Manual (M) Data Sheet (D)	Description
1.	26 24 16	D	Panelboards
2.	26 28 16	M	Manual Transfer Switch
3.	26 32 00	M	Generator Assembly
4.	26 51 00	D	Interior Light Fixtures
5.	26 56 00	D	Exterior Light Fixtures
6.	40 71 00	M	Flowmeter & Transmitter
7.	40 72 00	M	Pressure Level Transducer
8.	40 78 00	D	Individual Devices Installed on Local Control Station

END OF SUPPLEMENT

SUPPLEMENT 26 01 00 – B
MAINTENANCE SUMMARY FORM

Project Name:	Project Number:
Equipment:	Equipment ID / Tag Number:
Manufacturer:	Nameplate Data:
Manufacturer's Local Supplier Name:	
Phone:	
Address:	

MAINTENANCE REQUIREMENTS

Maintenance Requirements	Frequency Required	Lubricant if Required

END OF SUPPLEMENT

END OF SECTION

SECTION 26 01 06

STARTING AND ADJUSTING

PART 1 - GENERAL

1.01 SUMMARY

A. Section Includes.

1. Definitions.
2. Sequence of start-up activities.
3. General requirements.
4. Manufacturer's representative responsibilities.
5. CONTRACTOR's independent process control test certification verification.
6. CONTRACTOR's demonstration of the process control test certification to the ENGINEER.
7. CONTRACTOR's independent functional test certification verification.
8. CONTRACTOR's demonstration of the functional test certification to the ENGINEER.
9. Record keeping.
10. Supplements.

1.02 DEFINITIONS

A. Manufacturer's Representative – Authorized service division employee of the manufacturer.

1.03 SEQUENCE OF START-UP ACTIVITIES

A. Develop a specific plan for testing and start-up activities required for the project and submit to the ENGINEER for approval no less than 21 days before the initial start-up of equipment begins. The plan shall, as a minimum, incorporate the activities itemized below.

1. Complete all work associated with the installations of the unit and related processes before start-up activities begin.
2. Manufacturer's representative shall certify the installation meets manufacturer's recommendations and instructions.
3. Manufacturer's representative shall certify equipment operates as specified and as shown in the Contract Documents.
4. Calibrate instruments.
5. CONTRACTOR's independent process control test certification verification.

6. CONTRACTOR's demonstration of the process control test certification to the ENGINEER. Operation and maintenance manuals shall be available during this activity.

7. CONTRACTOR's independent functional test certification verification.

8. CONTRACTOR's demonstration of the functional test certification to the ENGINEER.

9. Submit records kept during start-up and adjusting activities.

10. Demonstration and training described in Section 26 01 15 – Demonstration and Training.

11. CONTRACTOR shall provide sufficient time in the progress schedule to accommodate the start-up sequences.

1.04 GENERAL REQUIREMENTS

A. All identification labeling shall be in compliance with Section 26 05 53 Identification of Electrical Systems.

B. Demonstrate proper function of all equipment, systems and control devices.

C. Furnish labor, process medium, chemicals, tools, equipment, instruments, and services required for, and incidental to, completing start-up and adjusting activities.

D. Manufacturer's representative shall provide assistance for assembly and installation as well as testing guidance and troubleshooting during the start-up and adjusting activities.

E. Complete Supplement 26 01 06-A, "Process Control Test Certification" and submit the completed form to the ENGINEER for approval. The submission and approval of this form is required prior to commencing with the CONTRACTOR's demonstration to the ENGINEER that each process itemized in the Process Control Test Certification operates as specified and designed.

F. Complete the following mechanical adjustments prior to, or during, the CONTRACTOR's initial start-up and adjusting activities and before demonstration to the ENGINEER.

1. Remove rust preventatives and oils applied to protect equipment during construction.

2. Flush lubrication systems and dispose of flushing oils. Recharge lubrication system with lubricant recommended by manufacturer.

3. Install and adjust packing, mechanical seals, O-rings, and other seals. Replace defective seals.

4. Remove temporary supports, bracing and other foreign objects installed to prevent damage during shipment, storage and erection.

5. Check rotating machinery for correct direction of rotation and for freedom of moving parts before connecting driver.

6. Perform cold alignment and hot alignment to manufacturer's tolerances.

7. Adjust belt tension and variable pitch sheaves.

8. Inspect hand and motorized valves for proper adjustment. Tighten packing glands to insure no leakage, but permit valve stems to rotate without galling. Verify valve seats are positioned for proper flow direction.

9. Tighten leaking flanges or replace flange gasket. Inspect screwed joints for leakage.

10. Install gratings, safety chains, handrails, shaft guards and sidewalks prior to operational testing.

G. Complete the following electrical and control adjustments prior to, or during, the CONTRACTOR's initial start-up and adjusting activities and before demonstration to the ENGINEER.

1. Perform insulation resistance tests on all conductors operating at or above 200 volts.

2. Perform continuity tests on all conductors.

3. Test and set circuit breaker relays and circuit breaker trip settings for proper operation. Coordinate the trip settings for all circuit breakers.

4. Check and record motors for actual full load amperage draw on each phase and compare to nameplate value. Submit results to ENGINEER.

H. Complete the following instrumentation adjustments prior to, or during, the CONTRACTOR's initial start-up and adjusting activities and before demonstration to the ENGINEER.

1. Field calibrate instruments and make required adjustments and control point settings.

2. Leak test pneumatic controls and instrument air piping.

3. Energize transmitting and control signal systems, verify proper operations, ranges and settings.

1.05 MANUFACTURER'S REPRESENTATIVE RESPONSIBILITIES

A. Manufacturer's representative shall inspect the installation and certify with a written report that the installation meets the requirements of the Contract Documents as well as the Manufacturer's recommendations. This shall be done before the equipment is energized.

B. At completion of a manufacturer's representatives' start-up and testing activities, they each shall furnish a written report certifying the equipment installation meets the following conditions.

1. Has been properly installed to meet the IBC seismic requirements and has been adjusted, aligned and lubricated as required.

2. Is free of any stresses imposed by connecting piping or anchor bolts.

3. Is suitable for satisfactory full time operation under full load conditions.

4. Operates within the allowable limits for vibration.

5. Controls, protective devices, instrumentation and control panels furnished as part of the equipment package are properly installed, calibrated and functioning.

6. Control logic for start-up, shutdown, sequencing, interlocks and emergency shutdowns have been tested and are functioning properly.

1.06 CONTRACTOR'S INDEPENDENT PROCESS CONTROL TEST CERTIFICATION VERIFICATION

A. Verify the equipment provided is installed correctly and functions properly.

B. Complete Supplement 26 01 06-A, "Process Control Test Certification" pursuant to the following.

1. The supplement is not intended as a replacement for a systematic check of all the requirements specified.

2. Complete the tests outlined in the Supplement, fill out the form and sign it certifying that the tests have been successfully performed and the results recorded.

3. Where it is not possible to test a function without the software furnished, the CONTRACTOR shall verify the inputs/outputs (I/O's) are terminated correctly by simulating the process as closely and to the extent possible and checking the I/O terminations for voltage and continuity.

C. Submission of the completed Supplement to the ENGINEER and approval of the submission are a prerequisite to the CONTRACTOR's demonstration of process control test certification to the ENGINEER.

1.07 CONTRACTOR'S DEMONSTRATION OF PROCESS CONTROL TEST CERTIFICATION TO THE ENGINEER

A. The intent of the demonstration of the operation to the ENGINEER is to ascertain the installation, including the hardwired control, are in compliance with the Contract Documents. Successful completion of this step will facilitate efficient demonstration of the complete operations of the facilities when the configured control software is installed and tested as part of the Functional Test Certification.

B. Demonstrate compliance with the items listed in Supplement 26 01 06-A.

C. ENGINEER may require the CONTRACTOR to demonstrate functions or processes in addition to those itemized in Supplement 26 01 06-A.

D. ENGINEER's approval of the demonstration of the process control test certification is required before the Functional Test Certification phase commences.

1.08 CONTRACTOR'S INDEPENDENT FUNCTIONAL TEST CERTIFICATION VERIFICATION

A. Complete Supplement 26 01 06-B, "Functional Test Certification" pursuant to the following.

1. Complete the tests outlined in the Supplement, fill out the form and sign it certifying that the tests have been successfully performed and the results recorded.

2. This test will be conducted with the configured software installed and functional. Alarms, data logging, trending and control functions shall be verified

B. Submission of the completed Supplement to the ENGINEER and approval of the submission are a prerequisite to the CONTRACTOR's demonstration of functional test certification to the ENGINEER.

1.09 CONTRACTOR'S DEMONSTRATION OF THE FUNCTIONAL TEST CERTIFICATION TO THE ENGINEER

A. The intent of the demonstration of the Functional Test Certification to the ENGINEER is to ascertain the installation, including the configured software program, is in compliance with the Contract Documents.

B. Demonstrate items listed in Supplement 26 01 06-B, "Functional Test Certification" to the ENGINEER.

C. ENGINEER may require the CONTRACTOR to demonstrate functions or processes in addition to those itemized in Supplement 26 01 06-B.

D. ENGINEER's approval of the demonstration of the Functional Test Certification is a prerequisite to beginning the commissioning phase.

1.10 RECORD KEEPING

A. CONTRACTOR shall maintain, as a minimum, the following records generated during the start-up and adjusting activities.

1. Daily logs of equipment and process testing, identifying all tests conducted and a summary of the results.
2. Logs of time spent with manufacturer's representatives providing services for the project.
3. Equipment lubrication records.
4. Electrical phase voltage and amperage measurements for all equipment.
5. Insulation resistance measurements.
6. All completed test forms specified in Section 16080 Electrical Testing.

PART 2 - PRODUCTS – NOT USED

PART 3 - EXECUTION

3.01 SUPPLEMENTS

A. Supplement 26 01 06-A, "Sweet Home Mahler Water Reclamation Facility Process Control Test Certification".

B. Supplement 26 01 06-B, "Sweet Home Mahler Water Reclamation Facility Functional Test Certification".

END OF SECTION

SUPPLEMENT 26 01 06-A
SWEET HOME MAHLER WATER RECLAMATION FACILITY PROCESS CONTROL TEST CERTIFICATION

PROCESS CONTROL TEST CERTIFICATION

#	Description	Pass	Fail	Comments
	All conductors and cables for field devices shall be terminated before commencing this Process Control Test Certification.			
	Service Entrance Equipment (SMSB-1, MSB-1, GEN-1)			
1	Verify generator remote start command is available at GEN-1 from the ATS located in MSB-1.			
2	Verify generator emergency stop is available at GEN-1 from the emergency stop pushbutton located in the Main Electrical/Blower Building (MEB).			
3	Verify active harmonic filter AHF-1 CTs are available at MSB-1.			
4	Verify active harmonic filter AHF-2 CTs are available at MSB-1.			
	Control Panel, CP-300			
5	Verify power is connected to CP-300 from panel PNL-L, circuit 14.			
6	Verify the control panel has a circuit schedule for all fuses.			
7	Verify CP-300 interior has correct labeling and location of control devices.			
8	Verify CP-300 exterior has correct labeling and location of control devices.			
9	Verify the Fiber Optic (FO) cable is installed and operational between MNP-100 and CP-300.			
10	Verify the Ethernet IP signal from network panel NIP-300 to CP-300 is connected properly and able to transmit and receive.			
11	Verify a normally closed (N/C) SPD Fault and verify signal is received at slot 3; input 2.			
12	Verify a normally closed (N/C) PS Fault and verify signal is received at slot 3; input 3.			
14	Verify a normally open (N/C) UPS Fail Alarm available and verify signal is received at digital input 8.			
15	Verify that digital input 9 is a spare. If not, due to revisions, add the appropriate inputs here and test in the same fashion and record results.			
16	Verify a normally open (N/O) ATS on Normal Power and verify signal is received at digital input 10.			
17	Verify a normally open (N/O) ATS on Generator Power and verify signal is received at digital input 11.			

#	Description	Pass	Fail	Comments
18	Verify a normally open (N/C) Generator Pre-Alarm and verify signal is received at digital input 12.			
19	Verify a normally open (N/C) Generator Alarm and verify signal is received at digital input 13.			
20	Verify that digital input 14 is a spare. If not, due to revisions, add the appropriate inputs here and test in the same fashion and record results.			
21	Verify a normally open (N/C) Float High Level Alarm and verify signal is received at digital input 15.			
22	Verify a normally open (N/C) Phase Fail Alarm and verify signal is received at digital input 16.			
23	Verify a normally open (N/C) Float Low Level Alarm and verify signal is received at digital input 17.			
24	Verify a normally open (N/C) Flowmeter Flow Pulse and verify signal is received at digital input 18.			
25	Verify a normally open (N/C) Float Overflow Alarm and verify signal is received at digital input 19.			
26	Verify that digital outputs 0-11 is a spare. If not, due to revisions, add the appropriate inputs here and test in the same fashion and record results.			
27	Verify an analog (4-20mA) input for Wet Well Level Indicator and verify signal is received at PLC Slot 1, Input 0.			
28	Verify an analog (4-20mA) input for Flowmeter Flow Rate and verify signal is received at PLC Slot 1, Input 1.			
29	Verify that analog inputs 2-3 is a spare. If not, due to revisions, add the appropriate inputs here and test in the same fashion and record results.			
30				

END OF SUPPLEMENT

SUPPLEMENT 26 01 06-B
SWEET HOME MAHLER WATER RECLAMATION FACILITY FUNCTIONAL TEST CERTIFICATION

FUNCTIONAL TEST CERTIFICATION

#	Description	Pass	Fail	Comments
	All conductors and cables for field devices shall be terminated before commencing this Process Control Test Certification.			
	Service Entrance Equipment (SMSB-1, MSB-1, GEN-1)			
1	Verify generator remote start command is available at GEN-1 from the ATS located in MSB-1.			
2	Verify generator emergency stop is available at GEN-1 from the emergency stop pushbutton located in the Main Electrical/Blower Building (MEB).			
3	Verify active harmonic filter AHF-1 CTs are available at MSB-1.			
4	Verify active harmonic filter AHF-2 CTs are available at MSB-1.			
	Control Panel, CP-300			
5	Verify power is connected to CP-300 from panel PNL-L, circuit 14.			
6	Verify the control panel has a circuit schedule for all fuses.			
7	Verify CP-300 interior has correct labeling and location of control devices.			
8	Verify CP-300 exterior has correct labeling and location of control devices.			
9	Verify the Fiber Optic (FO) cable is installed and operational between MNP-100 and CP-300.			
10	Verify the Ethernet IP signal from network panel NIP-300 to CP-300 is connected properly and able to transmit and receive.			
11	Simulate a normally closed (N/C) SPD Fault and verify signal is received at slot 3; input 2.			
12	Simulate a normally closed (N/C) PS Fault and verify signal is received at slot 3; input 3.			
14	Simulate a normally open (N/C) UPS Fail Alarm available and verify signal is received at digital input 8.			
15	Verify that digital input 9 is a spare. If not, due to revisions, add the appropriate inputs here and test in the same fashion and record results.			
16	Simulate a normally open (N/O) ATS on Normal Power and verify signal is received at digital input 10.			
17	Simulate a normally open (N/O) ATS on Generator Power and verify signal is received at digital input 11.			

#	Description	Pass	Fail	Comments
18	Simulate a normally open (N/C) Generator Pre-Alarm and verify signal is received at digital input 12.			
19	Simulate a normally open (N/C) Generator Alarm and verify signal is received at digital input 13.			
20	Verify that digital input 14 is a spare. If not, due to revisions, add the appropriate inputs here and test in the same fashion and record results.			
21	Simulate a normally open (N/C) Float High Level Alarm and verify signal is received at digital input 15.			
22	Simulate a normally open (N/C) Phase Fail Alarm and verify signal is received at digital input 16.			
23	Simulate a normally open (N/C) Float Low Level Alarm and verify signal is received at digital input 17.			
24	Simulate a normally open (N/C) Flowmeter Flow Pulse and verify signal is received at digital input 18.			
25	Simulate a normally open (N/C) Float Overflow Alarm and verify signal is received at digital input 19.			
26	Verify that digital outputs 0-11 is a spare. If not, due to revisions, add the appropriate inputs here and test in the same fashion and record results.			
27	Simulate an analog (4-20mA) input for Wet Well Level Indicator and verify signal is received at PLC Slot 1, Input 0.			
28	Simulate an analog (4-20mA) input for Flowmeter Flow Rate and verify signal is received at PLC Slot 1, Input 1.			
29	Verify that analog inputs 2-3 is a spare. If not, due to revisions, add the appropriate inputs here and test in the same fashion and record results.			
30				

#	Description	Pass	Fail	Comments

END OF SUPPLEMENT

SECTION 26 01 08

ELECTRICAL TESTING

PART 1 - GENERAL

1.01 SUMMARY

A. Section Includes

1. Electrical and control testing forms and requirements.

1.02 SEQUENCING

A. ENGINEER shall issue written acceptance of the following certifications submitted by the CONTRACTOR before utility power is supplied to conductors, cables, or equipment.

1. Megger Test
2. Continuity Test
3. Calibration Certification Test
4. Motor Insulation Test

B. CONTRACTOR shall verify to ENGINEER that every function of the electrical, measurement, and control systems are operating properly.

PART 2 - PRODUCTS – NOT USED

PART 3 - EXECUTION

3.01 FIELD QUALITY CONTROL

A. Site Tests, Inspection

1. CONTRACTOR shall be responsible to become familiar with the test and certification requirements of the Contract Documents for this project. It is the intent of these requirements that the Work will be systematically checked to verify that the functions required or implied, work properly to insure safety for the personnel, environment, and equipment associated with the Work.
2. CONTRACTOR shall complete the certification forms that are supplemental to this section and submit the forms to ENGINEER for approval.
3. All site test and inspection certificates and schedules shall be contained in a 3-ring binder(s).
   a. Size 8½ inches by 11 inches.
   b. Paper: 20-pound minimum, white for typed pages.
   c. Three-hole punch data for binding and composition; arrange printing so that punched holes do not obliterate data.
   d. Provide each manual with title page to include “Process Electrical Testing”, typed table of contents with consecutive page numbers. Where more than one binder is used, consecutively title each with a volume

number. The first binder shall be labeled Volume 1 and consecutively numbered as required to include all test documentation.

e. Tab sections for each required section of testing and acceptance certification.

4. CONTRACTOR shall notify ENGINEER seven days in advance of scheduled testing and facilitate the witnessing of those tests by ENGINEER.

5. CONTRACTOR shall provide ENGINEER with current as-built documentation for electrical and measurement and control commissioning with submittal of test certification.

a. Systems operating at or above 200-volts to ground or more shall be included in the Megger Test Certification. Minimum duration for each test shall be one minute, at 1000 VDC, and minimum acceptable results shall be 50 mega ohms.

b. Conductors and cables shall be included in the Continuity Test Certification. No continuity to ground is the only acceptable result of the test.

c. Conductors, cables, or equipment failing to meet the minimum requirements shall be replaced with new. Repair will not be acceptable.

d. Each individual instrument shall have an Instrument Calibration Certificate. The calibration shall operate within the tolerances specified by the manufacturer of the instrument and the Contract Documents.

e. Installed motors shall have a written Motor Insulation Certificate for all the motors listed in the Drawings for the Work. Motors failing test shall be tagged and locked out from operation.

3.02 SUPPLEMENTS

A. Schedule 26 01 08 - A; Megger Test Certificate.

B. Schedule 26 01 08 - B; Continuity Test Certificate

C. Schedule 26 01 08 - C; Instrument Calibration Certificate.

D. Schedule 26 01 08 - D; Motor Insulation Test Certificate.

END OF SECTION

SUPPLEMENT 26 01 08- A
MEGGER TEST CERTIFICATE

		Project Number:
Test Equipment Manufacturer:	Model Number:	Project Name:
Test Equipment Last Calibration Date:	Serial Number:	Accepted By: Date:
Testing Personnel:	Calibration Certificate	Drawing Reference:
Test Voltage:	Test Date:	Title:
		Tag:

Title	Tag Identification	A-Ø/ B-Ø	A- Ø / C- Ø	A- Ø / Ground	B- Ø / Ground	C- Ø / Ground	A- Ø / Neutral	B- Ø / Neutral	C- Ø / Neutral

SUPPLEMENT 26 01 08 – A
MEGGER TEST CERTIFICATE

		Project Number: *12345*
Test Equipment Manufacturer: *APC*	Model Number: *GH-1*	Project Name: *Water Diversion*
Test Equipment Last Calibration Date: *8/13/02*	Serial Number: *346321*	Accepted By: *S.E. Davis* Date: *01/01/2003*
Testing Personnel: *John Doe*	Calibration Certificate: *Yes*	Drawing Reference: *E-006*
Test Voltage: *1000 Volts*	Test Date: *12/17/02*	Title: *Power Distribution Diagram*
		Tag: *016*

Title	Tag Identification	A-Ø/ B-Ø	A- Ø / C- Ø	A- Ø / Ground	B- Ø / Ground	C- Ø / Ground	A- Ø / Neutral	B- Ø / Neutral	C- Ø / Neutral
Main Feeder	*016-CO3*	∞	∞	∞	∞	∞	∞	∞	∞
PNL-07	*016-CO7*	∞	∞	∞	∞	∞	∞	∞	∞
PNL-12	*016-C12*	∞	∞	∞	∞	∞	∞	∞	∞

SAMPLE

END OF SUPPLEMENT

SUPPLEMENT 26 01 08 – B
CONTINUITY TEST CERTIFICATE

		Project Number:
Test Equipment Manufacturer:	Model Number:	Project Name:
Test Equipment Last Calibration Date:	Serial Number:	Accepted By: Date:
Testing Personnel:	Calibration Certificate:	Drawing Reference:
	Test Date:	Title:
		Tag:

Permanent Tag Number	Function	Temporary Tag Number	Device ID Number	Ohms to Ground

SUPPLEMENT 26 01 08 – B
CONTINUITY TEST CERTIFICATE

		Project Number: *12345*
Test Equipment Manufacturer: *Fluke*	Model Number: *53G*	Project Name: *Water Division*
Test Equipment Last Calibration Date: *Unknown*	Serial Number: *638842*	Accepted By: *S.E. Davis* Date: *01/01/2003*
Testing Personnel: *John Doe*	Calibration Certificate: *No*	Drawing Reference: *E-501*
	Test Date: *12/30/02*	Title: *Conduit Schedule*

Permanent Tag Number	Function	Temporary Tag Number	Device ID Number	Ohms to Ground
016-34-PNL	*Level Indicator*	*34*	*016-34*	*∞*

S A M P L E

END OF SUPPLEMENT

SUPPLEMENT 26 01 08 – C
INSTRUMENT CALIBRATION CERTIFICATE

Component:				Manufacturer:			Project Number:			
Name:				Name:			Project Name:			
				Model:						
☐ Analog							☐ Digital			
	Range	Value	Units	Computing Functions? ☐Y ☐N			Control? ☐Y ☐N Action? ☐Direct ☐Reverse			
Indicate? ☐Y ☐N	Chart:			Describe:						
Record? ☐Y ☐N	Scale:						Switch? ☐Y ☐N Unit Range: Differential: ☐Fixed ☐Adjustable Rest? ☐Automatic ☐Manual			
Transmit? ☐Y ☐N	Input:									
Convert? ☐Y ☐N	Output:									
Required			As Calibrated				Required		As Calibrated	
Input %	Indicated	Output	Increasing input		Decreasing Input		#	Trip Pt	Reset Pt	Trip Pt	Reset Pt
			Indicated	Output	Indicated	Output		(Note Rising or Falling)		(Note Rising or Falling)	
							1				
							2				

#	Notes: Describe Test Results/List Any Failed Components	Instrument Calibration Acceptance
		By:
		Date:
		☐ Accepted ☐ Rejected
		Loop Title:
		Loop Number:

SUPPLEMENT 26 01 08 – C
INSTRUMENT CALIBRATION CERTIFICATE

Component: *FIT & FE-200*	Manufacturer: *Rosemount*	Project Number: *12345*
Name: *Main Line Flow Meter*	Name: *Magnetic Flow Meter*	Project Name: *Water Diversion*
	Model: *53H*	

☐ Analog					☐ Digital
	Range	Value	Units	Computing Functions? ☐Y ☐N	Control? ☐Y ☐N
Indicate? ☐Y ☐ N	Chart: *0-400*	GPM		Describe:	Action? ☐Direct ☐Reverse
Record? ☐Y ☐ N	Scale: *N/A*				Switch? ☐Y ☐N
Transmit? ☐Y ☐N	Input: *4-20*	MA			Unit Range: 0-400 GPM
Convert? ☐Y ☐N	Output: N/A				Differential: ☐Fixed ☐Adjustable Rest? ☐Automatic ☐Manual

Required			As Calibrated				Required			As Calibrated	
Input %	Indicated	Output	Increasing input		Decreasing Input		#	Trip Pt	Reset Pt	Trip Pt	Reset Pt
0	*0 GPM*	*4 mA*	*Indicated*	*Output*	*Indicated*	*Output*		(Note Rising or Falling)		(Note Rising or Falling)	
25	*100 GPM*	*8mA*	*100 GPM*	*8mA*	*101 GPM*	*8.05mA*	1	*N/A*	*N/A*	*N/A*	*N/A*

#	Notes: Describe Test Results/List Any Failed Components	Instrument Calibration Acceptance
		By: *S.E. Davis*
		Date: *12/16/02*
		☐ Accepted ☐ Rejected
		Drawing Reference: *I-802*
		Loop Title: *Flowmeter*
		Loop Number: *016 FIT-200*

SAMPLE

END OF SUPPLEMENT

SUPPLEMENT 26 01 08 – D
MOTOR INSULATION TEST

		Project Number:
Test Equipment Manufacturer:	Model Number:	Project Name:
Test Equipment Last Calibration Date:	Serial Number:	Accepted By: Date:
Testing Personnel:	Calibration:	Drawing Reference:
	Test Date:	

Motor Serial #	Equipment ID #	T-Lead #1/Ground	T-Lead #2/Ground	T-Lead #3/Ground

SUPPLEMENT 26 01 08 – D
MOTOR INSULATION TEST

		Project Number: *12345*
Test Equipment Manufacturer: *APC*	Model Number: *GH-1*	Project Name: *Water Diversion*
Test Equipment Last Calibration Date: *11/3/02*	Serial Number: *346321*	Accepted By: *S.E. Davis* Date: *1/1/03*
Testing Personnel: *John Doe*	Calibration: *Yes*	Drawing Reference: *E-202*
	Test Date: *12/20/02*	

Motor Serial #	Equipment ID #	T-Lead #1/Ground	T-Lead #2/Ground	T-Lead #3/Ground
GE - 346332	*Sewage pump No. 1*	∞	∞	∞
GE - 346331	*Sewage pump No.2*	∞	∞	∞
GE - 346330	*Sewage pump No. 3*	∞	∞	∞
GE - 346333	*RAS pump No. 1*	∞	∞	∞
GE - 346334	*RAS pump No. 2*	∞	∞	∞

S A M P L E

END OF SUPPLEMENT

END OF SECTION

SECTION 26 01 15

DEMONSTRATION AND TRAINING

PART 1 - GENERAL

1.01 SUMMARY

A. Section Includes.

1. Definitions.
2. General Requirements.
3. Supplements.

1.02 DEFINITIONS

A. Training Requirements.

1. The following topics shall be covered at a minimum:
   a. Equipment schematics.
   b. Control strategy.
   c. Troubleshooting procedures.
   d. Recommended maintenance and periodic testing procedures.
   e. Advanced start-up procedures.
   f. Control Input/Output (I/O) and communications review.
   g. Operator Interface Terminals (OIT) operating characteristics and navigation between various screens and functions.
   h. Proper use and function of selector switches, reset buttons, speed controls, E-stops, etc.
2. Training shall require one session for each type of process equipment.

B. Manufacturer's Representative / Factory Trained Technician.

1. Shall be an authorized service division employee of the manufacturer.

1.03 GENERAL REQUIREMENTS

A. Provide training for OWNER's personnel for items listed in Supplement 26 01 15 – A, "Schedule of Equipment Requiring Demonstration And Training".

B. Utilize Manufacturer's Representative to conduct training sessions.

C. CONTRACTOR shall have an employee familiar with the details of the installation attend the training sessions.

D. The Manufacturer's Representative and CONTRACTOR shall provided the demonstration and training required to meet the performance specified herein. No costs in addition to the original Bid shall be incurred by the OWNER to meet this requirement.

E. Schedule and coordinate training sessions to accommodate the following:

1. Provide fourteen (14) day written notice to the ENGINEER for approval prior to proposed training sessions.

2. Do not schedule training sessions for Monday, Friday, Saturday, Sunday or a Holiday.

3. No more than two (2) different types of equipment training sessions shall be scheduled for any one (1) day.

4. The Manufacturer's Representative shall utilize the operation and maintenance manuals as a basis for instruction. Should the need for additional data become apparent during instruction, CONTRACTOR shall prepare and insert the additional data into the operation and maintenance manual within seven (7) business days.

5. OWNER reserves the right to video tape the training session. The OWNER agrees that the video tape shall only be used for training employees.

6. Provide the material, data, and training aids including, but not limited to, the copying of any documents, screens, viewers, etc. required for training session.

7. Provide an outline of the topics for discussion during the training session and copies of the operation and maintenance manuals for all training session participants.

8. OWNER will provide the CONTRACTOR with the number of participants at each training session seven (7) days after receipt of the proposed training session schedule.

F. ENGINEER shall not authorize the commencement of the demonstration and training sessions until after successful demonstration of the Functional Test Certification, approval of the test reports submitted from Section 26 01 08 – Electrical Testing and the successful demonstration of the Process Test Certification in Section 26 01 06 – Starting And Adjusting.

G. Should the CONTRACTOR fail to meet the scheduled training session date, OWNER shall be entitled to notification of a new date complying with the requirements indicated herein.

H. Training sessions shall be scheduled to allow for appropriate progression of the training material. If knowledge of certain equipment is necessary to adequately comprehend the operational and maintenance aspects of another piece of equipment, the training session shall be scheduled to provide for this requirement.

I. Training sessions shall meet the following general requirements:

1. Training sessions shall be completed before commissioning.

2. CONTRACTOR shall provide the labor, process medium, chemical, tools, equipment and instruments necessary to accommodate demonstration of the equipment. CONTRACTOR may not rely on adequate water, wastewater, storm water or other normal process flows, etc. as they may not be available.

3. The content of the training sessions shall be specific to the products installed.

4. The training sessions shall be developed to allow for appropriate presentation of information and hands-on operation and maintenance opportunities for the OWNER's staff.

PART 2 - PRODUCTS – NOT USED

PART 3 - EXECUTION

3.01 SUPPLEMENTS

A. Supplement 26 01 15 - A, "Schedule of Equipment Requiring Demonstration And Training".

END OF SECTION

SUPPLEMENT 26 01 15 – A

SCHEDULE OF EQUIPMENT REQUIRING

DEMONSTRATION AND TRAINING

Item No.	Section No.	Description
1	26 24 16	Panelboards
2	26 28 16	Manual Transfer Switch
3	26 32 00	Generator Assembly
4	26 51 00	Interior Light Fixtures
5	26 56 00	Exterior Light Fixtures
6	40 71 00	Flowmeter & Transmitter
7	40 72 00	Pressure Level Transducer
8	40 78 00	Individual Devices Installed on Local Control Station
		OTHER ITEMS AS MAY BE SPECIFIED IN INDIVIDUAL SECTIONS.

END OF SUPPLEMENT

END OF SECTION

SECTION 26 05 00

COMMON WORK RESULTS FOR ELECTRICAL

PART 1 - GENERAL

1.01 PERMITS, FEES AND SERVICE CHARGES

A. The CONTRACTOR shall obtain all electrical permits required to complete the work and pay all associated fees.

B. The CONTRACTOR shall coordinate and provide for the installation and operation of franchise utility service (including any telephone and/or leased lines specified) as required during construction, startup, testing, and operation of the work until substantial completion.

1.02 OWNER FURNISHED CONTRACTOR INSTALLED EQUIPMENT

A. The following is a list of OWNER FURNISHED CONTRACTOR INSTALLED EQUIPMENT.

Item	Description
Switchboard SMSB-1	Main Service Switchboard
Switchboard MSB-1	Main Distribution Switchboard
MCC-300	Motor Control center
CP-300	PLC Control Panel
NIP-300	Network Panel
MNP-100	Network Panel

1.03 INTENT OF DRAWINGS AND SPECIFICATIONS

A. The contract document drawings and specifications are complimentary. What is called for by one shall be binding as if called for by all. Where a conflict occurs between the drawings and specifications, the stricter of the two shall take precedence.

B. It is the CONTRACTOR'S responsibility to schedule and coordinate the Work of subcontractors, suppliers, and other individuals or entities performing or furnishing any of CONTRACTOR'S Work.

C. Locations of equipment, control devices, instruments, boxes, panels, etc. are approximate only; exercise professional judgment in executing the Work to ensure the best possible installation:

1. The equipment locations and dimensions indicated on the Drawings are approximate. Use the shop drawings to determine the proper layout, foundation, and pad requirements, etc. for final installation. Coordinate with all subcontractors to ensure that all electrical equipment is compatible with other equipment and space requirements. Make changes required to accommodate differences in equipment dimensions.

2. The CONTRACTOR has the freedom to select any of the named manufacturers as identified in the individual specification sections; however, the ENGINEER has designed the spatial equipment layout based upon a single manufacturer and has not confirmed that every named manufacturer's equipment fits in the allotted space. It is the CONTRACTOR's responsibility to ensure that the equipment being furnished fits within the defined space.

D. Riser and other diagrams are schematic and are intended to show the approximate location of equipment, and the general alignment of conduits and piping, and shall not be used for obtaining quantities. Dimensions given on the plans shall take precedence over scaled dimensions and all dimensions whether in figures or scaled, shall be verified in the field.

E. The electrical drawings do not show complete details of the site conditions. The CONTRACTOR shall check actual conditions.

F. The exact location of apparatus, fixtures, equipment, conduit and piping shall be ascertained by the CONTRACTOR in the field, and the work shall be laid out accordingly. Should the CONTRACTOR fail to ascertain such locations or coordinate with work performed by other trades, the work shall be changed at no additional cost to the OWNER when so ordered by the ENGINEER. The ENGINEER reserves the right to make minor changes in the location of conduit, piping and equipment up to the time of installation without additional cost to OWNER.

G. CONTRACTOR shall provide all labor, materials, equipment, machinery, and tools necessary to provide all electrical equipment specified and shown on the Drawings. All items not specified in detail or shown on the Drawings but necessary for complete installation shall be provided by the CONTRACTOR.

H. Schematic diagrams:

1. All controls are shown de-energized.

2. Schematic diagrams show control function only. Incorporate other necessary functions for proper operation and protection of the system.

3. Add slave relays, where required, to provide all necessary contacts for the control system or where needed to function as interposing relays for control voltage coordination, equipment coordination, or control system voltage drop considerations.

4. Mount all devices shown on motor controller schematic diagrams in the controller compartment enclosure, unless otherwise noted or indicated.

5. Schematic diagrams are to be used in conjunction with the descriptive operating sequences in the Contract Documents. Combine all information and furnish a coordinated and fully functional control system.

1.04 CONTRACTOR'S RESPONSIBILITY FOR FIELD VERIFICATION OF EXISTING CONDITIONS

A. The CONTRACTOR shall be responsible for performing field verification of the existing conditions prior to bidding. The nature of this work inherently requires field observation to understand the existing conditions and scope of work.

B. Failure to observe the existing conditions or ignorance of existing conditions shall the responsibility of the CONTRACTOR alone. Additional services shall not be authorized due to the CONTRACTOR'S lack of understanding of the existing conditions.

1.05 CONTRACTOR'S RESPONSIBILITY FOR SHUTDOWNS AND MAINTAINING EXISTING SYSTEMS

A. Shutdowns of any Division 26 or 40 system shall be coordinated with the OWNER prior to performing the shutdown. The CONTRACTOR shall provide the OWNER with a written schedule identifying the system, duration, and impact on the OWNER's facility.

B. Existing Division 26 or 40 systems not impacted by the work in this project shall be protected and maintained during construction. Any system not identified on the Drawings or within these Specifications shall be brought immediately to the attention of the ENGINEER and OWNER.

C. The CONTRACTOR shall be responsible for bearing the cost of repairing or restoring all electrical systems that are disrupted or damaged during construction. The systems shall be repaired and restored to their original condition.

1.06 SUBSTITUTION REQUESTS FOR MECHANICAL, HVAC, PROCESS, OR OTHER EQUIPMENT IMPACTING THE ELECTRICAL DESIGN

A. The CONTRACTOR shall be responsible for including the cost impact to the electrical systems for substitution requests and/or value engineering for mechanical, HVAC, process, or other equipment made by other trades. The costs to the overall substitution request or value engineering solution must be included in the total number provided to the OWNER. The CONTRACTOR is responsible for coordinating the substitution requests or value engineering proposals made by other trades.

B. Any substitution request and/or value engineering solution which impacts the electrical design but does not include the costs shall be unacceptable.

C. Failure of other subcontractors to include the electrical cost impact shall not be the basis for a change order. The CONTRACTOR shall be responsible for coordinating the total costs of all substitution requests and/or value engineering solutions prior to presenting them to the ENGINEER or OWNER. When these requests are received by the ENGINEER or OWNER to review and approve, the ENGINEER and OWNER shall assume the cost impact to electrical has been included.

1.07 SUBMITTALS

A. Contractor shall submit all the product data in Division 26 at the same time. Piecemeal submittals will be rejected as incomplete.

B. Submittal Format:

1. The product data shall be provided as individual PDFs for each Section, unless otherwise noted for specific items. Each PDF shall be numbered to match the specification Section numbers. Submittals not itemized and labeled as specified will be rejected as incomplete.

2. A submittal is required for each product specified. Each individual product submittal shall have the corresponding Reference Keynote Number (example – 260000.A01) typewritten in the upper right hand corner of the submittal. The submittals within each Section tab shall be in the same sequential order as they

are listed in the specification Section. Submittals not containing the Reference Keynote Number will be rejected as incomplete.

3. No typical submittals will be accepted. Each submittal shall be project specific and clearly identify specifically which components or parts are being submitted for approval. Any product submittals, such as a catalog sheet, which do not clearly identify which components or parts are being submitted for approval, will be rejected as incomplete.

4. Submittals in PDF shall include an index, table of contents, or bookmarks with hyperlinks to the associated page of all submitted items. Index shall include each product specified with their corresponding Reference Keynote Number. Electronic submittals not containing a linked index, table of contents, or bookmarks will be rejected as incomplete.

C. Submittals shall be in accordance with the requirements of these Contract Documents and shall include the following:

1. Submittals shall include information and literature as required for all equipment and materials provided under this and related sections.

2. Shop Drawings: Shop drawings shall include the following along with any special requirements listed in the individual Specification Sections:

   a. Installation instructions and drawings

   b. Wiring schematics with termination point identification

   c. Motor information

   d. Materials of construction

   e. Manufacturer's name and model

   f. Manufacturer's catalog data

   g. Supplementary structural framing for electrical equipment including design loads, member size and location. When supplementary framing is indicated, verify that dimensions are suitable for the equipment furnished. Provide additional strength when equipment furnished is heavier than that specified.

3. Manufacturers' Literature: Literature indicating the compliance of the products with the Specifications shall be included with all submittals. This shall include catalogs and other descriptive bulletins. Relevant portions of the literature shall be clearly identified by highlighting or underlining.

4. Test Logs: The CONTRACTOR shall submit test logs as outlined below and as specified in subsequent electrical sections and drawings.

   a. A log of the complete results of tests for shorts and grounds for each circuit. All circuits and tests shall be clearly identified.

   b. A log of complete results of insulation resistance measurements of each circuit. All circuits and tests shall be clearly identified.

5. Operation and maintenance information for all equipment furnished and/or installed.

6. Programming instructions for any controllers or other programmable equipment. Copies of the any required software, including registration cards, shall be provided with the O&M manuals.

D. The CONTRACTOR shall indicate on the submittals all variances from the Specifications.

E. Record Drawings. After the completion of construction, the CONTRACTOR shall provide one set of "as-built" drawings to the ENGINEER as specified herein showing the location of buried conduits and all changes or deviations from the original drawings.

F. After the completion of construction, a printout and electronic copy of any programming and/or set-points for controllers, PLCs, meters or other programmable equipment, including VFDs.

G. Final inspection certificates shall be submitted prior to final payment.

1.08 INTERFACES TO EQUIPMENT, INSTRUMENTS, AND OTHER COMPONENTS:

A. The Drawings, Specifications, and overall design are based on preliminary information furnished by various equipment manufacturers which identify a minimum scope of supply from the manufacturers. This information pertains to, but is not limited to, instruments, control devices, electrical equipment, packaged mechanical systems, and control equipment provided with mechanical systems.

B. Provide all material and labor needed to install the actual equipment furnished, and include all costs to add any additional conduit, wiring, terminals, or other electrical hardware to the Work, which may be necessary to make a complete, functional installation based on the actual equipment furnished:

1. Make all changes necessary to meet the manufacturer's wiring requirements.

C. All electrical equipment and systems for the entire Project must comply with the requirements of the Electrical Specifications, whether referenced in the individual Equipment Specifications or not:

1. The requirements of the Electrical Specifications apply to all Electrical Work specified in other sections, including HVAC controls, packaged mechanical systems, LCPs, VCPs, etc.

2. Inform all vendors supplying electrical equipment or systems of the requirements of the Electrical Specifications.

3. The Owner is not responsible for any additional costs due to the failure of the Contractor to notify all subcontractors and suppliers of the Electrical Specifications requirements.

D. Special subcontractor requirements:

1. As specified elsewhere in this Section, provide the Work specified in the Electrical Specifications by a qualified electrical subcontractor.

1.09 COORDINATION OF WORK

A. The CONTRACTOR shall plan his work in coordination with the other trades and with the power and telephone utility authorities.

B. The CONTRACTOR shall field verify all dimensions of equipment to be installed or provided by others so that correct clearances and connections may be made between the work installed by the CONTRACTOR and equipment installed or provided by others.

C. The CONTRACTOR shall arrange all conduit runs so that they do not interfere with piping, structural members, etc.

D. All working measurements shall be taken from the sites, checked with those shown on the drawings, and if they conflict, reported to the ENGINEER at once, and before proceeding with the work. Should the CONTRACTOR fail to comply with this procedure, he shall alter his work at his own expense as directed by the ENGINEER.

E. No additional payments will be allowed where obstructions in the work of other trades, or work under this contract requires offsets to conduit runs.

F. The CONTRACTOR is responsible for all alterations in the work to accommodate equipment differing in dimensions or other characteristics from that shown or specified.

G. The CONTRACTOR shall provide all temporary power necessary for existing site equipment and for all construction needs.

1.10 SUPERVISION

A. The CONTRACTOR shall maintain adequate supervision of the work and shall have a responsible person in charge at the site during all times that work under this contract is in progress, or when necessary for coordination with other work.

1.11 CODES

A. Work shall conform to the National Electrical Code (NEC), and State Codes and other applicable codes, even though not specifically mentioned for each item. These shall be regarded as the minimum standard of quality for materials and workmanship.

1.12 QUALITY ASSURANCE

A. System supplier responsibilities:

1. Requirements as specified in the Instrumentation and Control Specifications.

2. System supplier:

a. Due to the critical and complex technical requirements of this Project, all Work (materials, equipment, products, submittals, labor, services, etc.) specified in the Electrical, and Instrumentation and Control Specifications, and shown on the Electrical and Instrumentation Drawings is to be furnished by a single system supplier who has single source responsibility for both the process control and instrumentation systems and the electrical power system.

3. Contractual relationship:

a. Form a contractual relationship between the electrical subcontractor and the Instrumentation and Control Subcontractor (ICSC).

b. Requirements for the first-tier subcontractor:

1) Contract directly with the Contractor.

2) Be either the electrical subcontractor or the ICSC.

c. Requirements for the second-tier subcontractor:

1) A division of the first-tier subcontractor, or

2) A joint venture with the first-tier subcontractor, or

3) A subcontractor to the first-tier subcontractor.

d. The system supplier manages, directs, and supervises all the Work of its second-tier subcontractor. The system supplier is solely responsible for the entire electrical and instrumentation system, including, but not limited to, all Electrical, Instrumentation, and Process Contract Drawings, Electrical Specifications, and Instrumentation and Control Specifications:

1) Provide any additional conduit, wire, etc.

2) Any additional I/O, programming, screens, interface devices needed by the system supplier are to be provided by the electrical subcontractor or the ICSC, under the above outlined working agreement.

3) Ensure compatibility between the Process Control and Instrumentation System (PCIS) and the electrical system being installed.

1.13 SITE OR PROJECT CONDITIONS

A. Provide enclosures for electrical, instrumentation and control equipment, regardless of supplier or subcontractor furnishing the equipment, that meet the requirements outlined in NEMA Standard 250 for the following types of enclosures:

1. NEMA Type 1: Intended for indoor use, primarily to provide a degree of protection from accidental contact with energized parts or equipment.

2. NEMA Type 4: Intended for indoor or outdoor use, primarily to protect equipment from exposure to windblown dust and rain, splashing or hose directed water, ice formation and freezing.

3. NEMA Type 4X: Made from corrosion resistant materials (316 stainless steel) and are intended for indoor or outdoor use, primarily to protect equipment from exposure to windblown dust and rain, splashing or hose directed water, ice formation and freezing, and corrosion.

4. NEMA Type 12: Intended for indoor use, primarily to provide a degree of protection from dust, falling dirt and dripping non-corrosive liquids.

5. NEMA Type 6: Rated for submergence.

6. NEMA Type 6P: Rated for prolonged submergence.

7. NEMA Type 7: Intended for installation in locations where explosive or combustible gas or vapors may be present (Class I Division 1 or Class I Division 2) meeting the requirements outlined in Section 26 05 08.

8. NEMA Type 8: Intended for installation in either indoor or outdoor locations where explosive or combustible gas or vapors may be present (Class I Division 1 or Class I Division 2) and the equipment is oil-immersed, meeting the requirements outlined in Section 26 05 08.

B. Plant Area Electrical Work Requirements:

1. Provide all Electrical Work in accordance with the following table, unless otherwise specifically indicated on the Drawings:

2. Provide stainless steel NEMA 4X enclosures and supports, and PVC-GRC conduit type for all Electrical work not included in the following table unless otherwise indicated on the Drawings. Conduit type definitions are listed under 26 05 33, Part 1.03B.

3. Reference Section 26 05 29 – Hangers and Supports and 26 05 33 – Raceway and Boxes for detailed requirements.

Plant Area	NEMA Enclosure Type	Exposed Conduit Type	Environment (1)	Support Materials & Hardware	Anchor Materials
Main Electrical Building, Blower Building Exterior	NEMA 4X	RAC	W	SST	SST
Main Electrical Building, Blower Building Interior	NEMA 12	EMT	D	Galvanized	Galvanized
Existing Electrical Building Exterior Exposed	NEMA 4X	RAC	W	SST	SST
Existing Electrical Building Exterior Interior	NEMA 12	EMT	D	Galvanized	Galvanized
Underground	NA	PVC 40	W	NA	NA
Conduit Transition from below Grade to Above Grade	NA	PVC-GRC	W	SST	SST
Influent Pump Station	NEMA 4X	PVC-GRC	W, H	SST	SST
(1) W = WET; D = DAMP; C = CLEAN/DRY; X = CORROSIVE; H = HAZARDOUS					

1.14 WIRING WITHIN CONDUIT

A. All wiring shall be installed within a conduit, raceway, or tray as identified within Contract Documents, no exceptions.

1. All wiring associated with low voltage systems, including, but not limited to low voltage communications, electronic access control, building automation / HVAC control, security systems, and fire alarm systems shall be in conduit, no exceptions.

2. All Class II wiring shall be within conduit, no exceptions.

1.15 CONTRACTOR'S RECORD DRAWINGS & AS-BUILTS

A. The CONTRACTOR shall maintain a neatly marked set of record drawings showing the locations of all buried conduits and other utilities encountered or installed during construction. The final locations of panels, field mounted instruments and panels, terminal boxes, junction boxes, receptacles, light switches and other materials included in the work shall be shown, as well as conduit routing between them to the extent it differs from the design drawings. Record drawings shall be kept current with the work as it progresses and shall be subject to inspection by the OWNER's Representative at any time. Failure to keep field record drawings current may result in the issuance of a stop work order or delay in the processing of pay requests until the record drawings are made current.

B. The CONTRACTOR shall provide one complete set of as-built electrical schematics for all panels and equipment provided, including PLC I/O schematics as applicable, panel elementary diagrams, interconnecting wiring diagrams, wire numbers, termination strip locations and numbers. These shall be in the same format and style as those in the Contract Documents and submittal requirements.

C. All information shown on the CONTRACTOR's field record drawings and as-built schematics shall be subject to verification by the OWNER's Representative. If significant errors or deviations are noted by the OWNER's Representative, new as-builts shall be completed at the CONTRACTOR's expense.

PART 2 - PRODUCTS

2.01 PORTABLE OR DETACHABLE PARTS

A. The CONTRACTOR shall retain in his possession and shall be responsible for all portable and detachable parts or portions of installations such as fuses, key locks, adapters, blocking chips and inserts until completion of his work.

B. These parts shall be delivered to the ENGINEER and an itemized receipt obtained. This receipt, together with 2 copies of the final inspection certificate, shall be attached to the CONTRACTOR's request for final payment.

C. All equipment shall be demonstrated to operate in accordance with the requirements of this specification and the manufacturer's recommendations.

2.02 NEW PRODUCTS

A. All products shall be new without defects and covered by Manufacturer's warranty. Products shall be re-used only where indicated on the Drawings.

B. All products shall be listed, labeled, and certified by a testing agency approved by the state of Oregon.

C. All equipment of the same type and capacity shall be by the same manufacturer.

PART 3 - EXECUTION

3.01 IDENTIFICATION

A. All identification labeling shall be in compliance with Section 26 05 53 Identification for Electrical Systems.

3.02 WORKMANSHIP & COORDINATION

A. All work shall be performed by personnel skilled in the particular trade in a workmanlike manner. Workmanship shall conform to the standards of the NEC and the National Electrical Installation Standards (NEIS).

B. The ENGINEER shall be the sole judge as to whether or not the finished work is satisfactory; and if in his judgment any material or equipment has not been properly installed or finished, the CONTRACTOR shall replace the material or equipment whenever required, and reinstall it in a manner entirely satisfactory to the ENGINEER without any increase in cost to the OWNER.

C. The CONTRACTOR shall coordinate and verify the installation of all equipment furnished by him to other trades, or equipment provided and installed by other trades that is connected to the electrical or control systems. Work shall include the furnishing of all labor, materials, and equipment required for the installation of a complete and operable system as hereinafter specified and as indicated on the drawings. The Contract Documents are complementary and what is called for by any one shall be as binding as if called for by all. Unless otherwise specifically stipulated, the term "furnished and installed complete" shall be considered a part of this section.

D. Controls and systems shall be complete with transformers, switches, relays, contactors, control valves, control devices, instrument piping, fittings, valves, control wiring, thermometers, pressure gauges, thermostats, damper operators, miscellaneous control cabinets to fill the intent of the Specifications and shall provide control for the various units and systems. All control valves and motorized dampers shall be provided with position indicators.

E. Unless otherwise specified or shown on the drawings, switches or relays shall be installed in, or adjacent to the motor starter or other electrical device to which they are to be connected. Control and interlock wiring shall be included as necessary from breakers specified herein or shown on the drawings.

F. Each control schematic intended to control a series of motor operated louvers, fans, and thermostats shall contain a switch for maintenance to meet the NEC requirements regarding disconnect switches for motors. This switch shall be local if any unit controlled is out of sight of the switch. This switch shall disconnect all power to all motor operated devices within the circuit.

3.03 TEMPORARY HEATING, LIGHTING AND POWER

A. The CONTRACTOR shall provide all heat, lighting and power required to construct and protect the work until the work is placed in service by the OWNER for beneficial use of the OWNER. Temporary heaters shall be provided as required to keep the work area and all new electrical components dry.

B. The source for temporary power shall be from the electric utility or OWNER approved CONTRACTOR supplied auxiliary power units. The installation for electric power shall meet the requirements of local authorities and of OSHA.

C. The CONTRACTOR shall obtain all permits and pay all costs for connecting temporary power service at no expense to the OWNER.

3.04 SUPPORT BACKING

A. Provide any necessary backing required to properly support all fixtures and equipment installed under this contract.

3.05 CUTTING, PATCHING AND FRAMING

A. The CONTRACTOR shall determine in advance the locations and sizes of all sleeves, chases, and openings necessary for the proper installation of his work.

B. Whenever practical, inserts or sleeves shall be installed prior to covering work. Cutting and patching shall be held to a minimum. All required holes in concrete construction shall be made with a core drill and patched with non-metallic non-shrink grout.

C. Cutting, fitting repairing and finishing of carpentry work, metal work, or concrete work, and the like, which may be required for this work shall be done by craftsmen skilled in their respective trades. When cutting is required, it shall be done in such a manner as not to weaken walls, partitions, or floors; and holes required to be cut in floors must be drilled without breaking out around the holes.

3.06 TESTS

A. The CONTRACTOR shall furnish all labor, material, instruments and tools to make all connections for testing of the electrical and instrumentation installation. All equipment shall be demonstrated as operating properly prior to the acceptance of the work. All protective devices shall be operative during testing of equipment. The tests shall be made under the supervision of the ENGINEER. All deficiencies or unsatisfactory conditions as determined by the ENGINEER or inspecting authorities shall be corrected by the CONTRACTOR in a satisfactory manner at his own expense.

B. After visual inspection of joints and connections and the application of tape and other insulating materials, all sections of the entire wiring system shall be thoroughly tested for shorts and grounds. A log of results for each circuit shall be kept by the CONTRACTOR and presented to the ENGINEER.

C. A phase rotation check shall be made to demonstrate that all power receptacles, service feeders, main power feeders and auxiliary power generators have the same A - B - C phase rotation and ground relationships.

D. Equipment shall be tested by operating all electric motors, relays, controls, switches, heaters, etc., sufficiently to demonstrate proper installation and electrical connections. Control and emergency conditions shall be artificially simulated where necessary for complete system or subsystem.

3.07 CLEANING AND TOUCH-UP PAINT

A. Upon completion of work, all electrical equipment shall be cleaned.

1. Vacuum all dirt, metal shavings, and foreign materials from all enclosures. The use of compressed air shall not be acceptable.

2. All stains, dirt, and fingerprints shall be removed from switchboards, motor control centers, panelboards, light fixtures, enclosures, and all other electrical equipment covers.

B. Provide touch-up paint on equipment that has been scraped, scratched, or chipped during construction. Paint color shall match color of equipment.

3.08 COORDINATION OF STARTUP AND ADJUSTING, COMMISSIONING, DEMONSTRATION AND TRAINING, AND OPERATION AND MAINTENANCE DATA.

A. Reference Section 26 01 00 - Operation and Maintenance Data, and 26 01 15 - Demonstration and Training, 26 01 06 - Starting and Adjusting, and 26 08 00 – Commissioning of Electrical Systems for detailed requirements.

END OF SECTION

SECTION 26 05 05

SELECTIVE DEMOLITION FOR ELECTRICAL

PART 1 - GENERAL

1.01 SUMMARY

A. Section Includes.

1. Removal of existing electrical equipment, wiring and conduit in areas to be remodeled. Removal of designated construction, dismantling, cutting and alterations for completion of the Work.
2. Disposal of materials.
3. Storage of removed materials.
4. Identification of utilities.
5. Salvaged items.
6. Protection of items to remain as identified in the schedules at the end of this Section.
7. Relocate existing equipment.
8. Removal of temporary electrical equipment prior to completion of the Work.

1.02 CLOSEOUT SUBMITTALS

A. Refer to the Contract Documents for general closeout submittal requirements.

B. Project Record Drawings shall be provided that record actual locations of capped conduits and equipment abandoned in place.

1.03 SEQUENCING

A. Sequencing of the Work shall be as noted in the Contract Documents.

1.04 SCHEDULING

A. Refer to the Contract Documents.

B. Coordinate the schedule of noisy, malodorous and dusty work with the ENGINEER.

1.05 COORDINATION

A. Refer to Contract Documents.

B. Conduct demolition to minimize interference with adjacent or occupied areas.

C. Coordinate demolition work with other trades.

D. Coordinate and sequence demolition so as not to cause shutdown or interruption of operation of surrounding areas.

E. Arrange timing of shutdowns with the OWNER. Do not shutdown any utility service without prior written approval. Keep shutdown periods to a minimum.

F. Identify salvage items in cooperation with the OWNER.

PART 2 - PRODUCTS – NOT USED

PART 3 - EXECUTION

3.01 EXAMINATION

A. Verify wiring and equipment scheduled for demolition serve only abandoned process and facilities.

B. Verify termination points for demolished services.

3.02 DEMOLITION

A. Items scheduled for demolition shall be legally disposed of by the CONTRACTOR.

B. Remove exposed abandoned conduit.

C. Disconnect electrical systems in walls, floors and ceilings scheduled for removal.

D. Reconnect equipment being disturbed by renovation work and required for continued service.

E. Disconnect or shut off service to areas where electrical work is to be removed. Remove electrical fixtures, equipment, switches, receptacles, conduit, and conductors which are not part of the completed project.

F. Install temporary wiring and connections necessary to maintain existing systems in service during construction.

G. Remove, relocate and extend existing installations to accommodate new construction.

H. Repair adjacent construction and finishes to original condition that are damaged during demolition and extension work.

I. Remove abandoned grounding and bonding components, fasteners, supports and electrical identification components. Cut embedded support elements flush with wall, floors and ceilings.

J. Clean and repair existing equipment scheduled to be reinstalled.

K. Protect and retain power to existing active equipment remaining.

L. Cap abandoned empty conduit at both ends.

M. Provide water-tight, knockout seals in panels, enclosures, gutters, or junction boxes where conduit has been removed.

N. Seal concrete penetrations, originally occupied by removed conduit, with suitable grouting material.

3.03 EXISTING PANELBOARDS

A. Trace out circuits in existing panelboards and document the as-built conditions, including what each circuit feeds, the size of the conductors for each circuit and the total volt-amp load on each circuit.

B. Remove all unused conductors due to scheduled demolition.

C. Provided as-built panel schedules at the completion of the Work.

3.04 SALVAGE ITEMS

A. Remove and protect items scheduled to be salvaged. Coordinate with OWNER where you are to locate these items

3.05 REUSABLE ELECTRICAL EQUIPMENT

A. Unless specifically identified for reuse, no used electrical equipment, conduit, conductors, components of any sort scheduled for demolition, disposal or salvage shall be installed for reuse on the project.

B. Electrical equipment identified specifically as being reused on the project shall be cleaned and protected until such time as it is reinstalled.

3.06 SCHEDULES

A. Salvage equipment identified by the OWNER at a location they identify. Coordinate the delivery of the salvaged items to the location identified by the OWNER at a time they have pre-approved.

B. Dispose of the following equipment and its associated components.

1. Existing electrical equipment, conduit, and conductors located at the storage buildings being demolished

2. Existing utility poles, meter bases, and any associated equipment identified on the Drawings.

C. Reuse the following items.

1. No items listed for reuse.

END OF SECTION

(THIS PAGE LEFT BLANK INTENTIONALLY)

SECTION 26 05 08

HAZARDOUS CLASSIFIED AREA CONSTRUCTION

PART 1 - GENERAL

1.01 SUMMARY

A. Section includes:

1. Executing and completing Work in hazardous and/or classified areas as defined by the NEC Articles 500 through 516,

2. NFPA 820, and as indicated on the Drawings and specified in the Specifications.

B. Related Sections

1. The Contract Documents are complementary; what is called for by one is as binding as if called for by all.

2. It is the Contractor's responsibility for scheduling and coordinating the Work of subcontractors, suppliers, and other individuals or entities performing or furnishing any of Contractor's Work.

1.02 REFERENCES

A. As specified in Section 26 05 00, Common Work Results for Electrical.

1.03 DEFINITIONS

A. As specified in Section 26 05 00, Common Work Results for Electrical.

B. Specific definitions:

1. For the purposes of these Specifications, the terms "Hazardous" and "Classified" will be considered synonymous.

1.04 SYSTEM DESCRIPTION (NOT USED)

1.05 SUBMITTALS

A. Furnish submittals as specified in Section 01300, Submittal Procedures and Section 26 05 00, Common Work Results for Electrical.

1.06 QUALITY ASSURANCE

A. As specified in Section 26 05 00, Common Work Results for Electrical.

B. Regulatory requirements:

1. All wiring in hazardous and/or classified locations shall comply with all applicable articles of the NEC, in particular Articles 500 through 516.

2. Except as modified in Articles 500 through 516, all other applicable rules contained in the NEC shall apply to electric equipment and wiring installed in hazardous and/or classified locations.

3. All devices used in Class I Division 1 or Division 2 areas must have visible manufacturer installed nameplates specifically stating the Class, Division, and Group for which the device is approved.

1.07 DELIVERY, STORAGE, AND HANDLING

A. As specified in Section 26 05 00, Common Work Results for Electrical.

1.08 PROJECT OR SITE CONDITIONS

A. A list of hazardous areas is specified in Section 26 05 00, Common Work Results for Electrical and indicated on the Drawings.

PART 2 - PRODUCTS

2.01 COMPONENTS

A. Conduit and sealing fittings:

1. As specified in Section 26 05 00, Common Work Results for Electrical.

B. Conduit boxes and bodies:

1. As specified in Section 26 05 33, Raceway and Boxes.

C. Wiring devices:

1. As specified in Section 26 27 26, Wiring Devices.

PART 3 - EXECUTION

3.01 INSTALLATION

A. As specified in Section 26 05 00, Common Work Results for Electrical.

B. Conduit installation:

1. As specified in Section 26 05 33 - Raceway and Boxes.

2. Wrench tighten all conduit joints to minimize sparking when fault current flows through the conduit system.

3. Make all conduit connections so that there is a minimum of 5 threads fully engaged in the connection.

4. Flexible conduit:

a. Class I Division 1 hazardous areas:

1) Approved and marked suitable for Class I Division 1.

2) Listed for compatibility with the group type atmosphere where used.

b. Class I Division 2 areas:

1) Liquidtight metal conduit with approved fittings.

c. Maximum length as specified in Section 26 05 33 - Raceway and Boxes.

C. Sealing fittings:

1. Provide an approved seal, no more than 18 inches from the enclosure, for all conduits entering an enclosure containing switches, circuit breakers, fuses, relays, resistors, or any other apparatus which may produce arcs, sparks, or high temperatures:

   a. Only explosion proof unions, couplings, elbows, capped elbows, and conduit bodies like “L”, “T”, and “X” may be installed between the sealing fitting and the enclosure.

2. Provide entire assemblies approved for Class I locations for self- sealing or factory sealed assemblies where the equipment that may produce arcs, sparks, or high temperatures is located in a compartment separate from the compartment containing splices or taps, and an integral seal is provided where conductors pass from one compartment to the other:

   a. Seals are required in all conduit connections to the compartment containing splices and must be within 18 inches of the enclosure.

3. Install a conduit seal within 18 inches of the boundary in each conduit run entering or leaving a classified location. No union, coupling, box, or fitting is allowed in the conduit between the sealing fitting and the point at which the conduit leaves the classified location.

4. For underground conduits entering or leaving a classified location or between Class I Division 1 and Division 2 locations:

   a. Provide a conduit seal at both points where the conduit emerges from the ground:

      1) Place the conduit seal within 18 inches of finished grade.

      2) No union, coupling, box, or fitting is allowed in the conduit system between the seal fitting and the point at which the conduit enters the ground.

5. Separate all conductors within the conduit system and seal using an approved packing dam installed to both hold the sealing compound and to maintain the separation between the wires:

   a. Remove the outer jacket of multi-conductor non-shielded cables in the area of the sealing fitting and separate each conductor from the cable and seal individually.

6. Install seals with drains in all electrical control stations, low points of conduit or any place where moisture may condense and accumulate.

7. Install the sealing compound with a minimum thickness of 5/8 inch or the trade size of the conduit, whichever is greater.

8. All motors, actuators, and instrument transmitters required to have conduit seals shall have a union installed between the seal and the respective motor, actuator, or instrument transmitter. This will permit the motor, actuator, or transmitter to be disconnected or replaced without disturbing the wiring or conduit seal.

D. Boxes and fittings:

1. Class I Division 1 areas:

a. Utilize threaded connections for all metallic boxes, fittings, and joints to the conduit system.

2. Class I Division 2 areas:

a. Provide approved grounding bushings on conduits entering and exiting metallic boxes to bond the conduits together.

E. Outlet boxes and bodies:

1. Provide conduits bodies and boxes suitable for the conduit system as specified in Section 26 05 33 - Raceway and Boxes.

2. Class I Division 2 areas:

a. Boxes not containing arcing parts:

1) Material and NEMA ratings as specified in Section 26 05 00, Common Work Results for Electrical.

2) Pressed metal boxes are not allowed.

b. Provide heavy duty cast construction type conduit fittings and joints:

1) Explosion proof rated fittings and joints are not necessary.

c. Any enclosure containing arcing parts, etc. shall have all construction associated with the enclosure, conduit system, etc. conforming to Class I Division 1 construction.

F. Motor connections:

1. Conduit installation in Class I Division 1 and Class I Division 2 locations for motors that contain arcing parts, shall proceed as follows:

a. First - Conduit.

b. Second - Explosion proof flexible coupling.

c. Third - Sealing fitting.

d. Fourth - Explosion proof union.

e. Fifth - Connection to the motor terminal box.

2. Wiring connections to motor leads shall be as specified in Section 26 05 83, Low Voltage Wire Connections.

3. Bond the non-current-carrying metal parts of equipment, raceways and other enclosures as required by the NEC to ensure electrical continuity.

G. Grounding

1. A grounding conductor shall be provided in all raceways, junction boxes, and enclosures located within all Class 1 Division 1 and Class 1 Division 2 locations.

3.02 TESTING AND FACILITY STARTUP

A. As specified in Section 26 01 15, Demonstration And Training.

3.03 FIELD QUALITY CONTROL

A. As specified in Section 26 05 00, Common Work Results for Electrical.

B. Obtain inspection and approval from the Engineer before and after each seal is poured.

END OF SECTION

(THIS PAGE LEFT BLANK INTENTIONALLY)

SECTION 26 05 19

LOW-VOLTAGE ELECTRICAL POWER CONDUCTORS AND CABLES

PART 1 - GENERAL

1.01 SUMMARY

A. Section Includes.

1. The section includes the requirements for conductors and cables used to conduct potentials of 600 volts and less.

2. All conductors and cables shall be installed in conduit or approved raceways regardless of which Division the conductors or cables are specified.

1.02 REFERENCES

A. The following is a list of Standards which may be referenced in the Section.

1. American Society for Testing and Materials (ASTM).

a. B8, Standard Specification for Concentric-Lay-Stranded Copper Conductors, Hard, Medium-Hard or Soft.

2. National Electrical Contractors Association, Inc. (NECA): National Electrical Installation Standards (NEIS).

3. National Electrical Manufacturers Association (NEMA).

a. WC 3, Rubber-Insulated Wire and Cable for the Transmission and Distribution of Electrical Energy.

b. WC 5, Thermoplastic Insulated Wire and Cable for the Transmission and Distribution of Electrical Energy.

c. WC 7, Cross Linked-Thermosetting Polyethylene Wire and Cable for the Transmission and Distribution of Electrical Energy.

d. WC 55, Instrumentation Cables and Thermocouple Wire.

4. National Fire Protection Association (NFPA). 70, National Electrical Code (NEC).

5. Underwriters Laboratories, Inc. (UL).

a. 13, Standard for Power-Limited Circuit Cables.

b. 44. Standard for Safety Rubber-Insulated Wires and Cables.

c. 62, Standard for Safety Flexible Cord and Fixture Wire.

d. 510, Standard for Safety Insulating Tape.

e. 854, Standard for Safety Service-Entrance Cables.

f. 910, Standard for Safety Test Method for Fire and Smoke Characteristics of Electrical and Optical Fiber Cables Used in Air Handling Spaces.

g. 1277, Standard for Safety Electrical Power and Control Tray Cables.

h. 1581, Standard for Safety References for Electrical Wires, Cables and Flexible Cords.

1.03 SUBMITTALS

A. Contractor shall submit all the product data in Division 26 at the same time. Piecemeal submittals will be rejected as incomplete.

B. Submittal Format:

1. The product data shall be provided as individual PDFs for each Section, unless otherwise noted for specific items. Each PDF shall be numbered to match the specification Section numbers. Submittals not itemized and labeled as specified will be rejected as incomplete.

2. A submittal is required for each product specified. Each individual product submittal shall have the corresponding Reference Keynote Number (example - 26000.A01) typewritten in the upper right hand corner of the submittal. The submittals within each Section tab shall be in the same sequential order as they are listed in the specification Section. Submittals not containing the Reference Keynote Number will be rejected as incomplete.

3. No typical submittals will be accepted. Each submittal shall be project specific and clearly identify specifically which components or parts are being submitted for approval. Any product submittals, such as a catalog sheet, which do not clearly identify which components or parts are being submitted for approval, will be rejected as incomplete.

4. Submittals in PDF shall include an index, table of contents, or bookmarks with hyperlinks to the associated page of all submitted items. Index shall include each product specified with their corresponding Reference Keynote Number. Electronic submittals not containing a linked index, table of contents, or bookmarks will be rejected as incomplete.

C. Refer to Section 26 05 00 – Common Work Results for Electrical Submittals for additional requirements.

D. Product Data

1. Pursuant to Section 01 33 00 – Submittals.

2. Manufacturer's data including materials of construction, methods of installation and related information for each item specified in PART 2 PRODUCTS.

PART 2 - PRODUCTS

2.01 MATERIALS

A. <u>Single Copper Conductors (THHN / THWN-2) (260519.C01)</u>.

1. Conductors shall be rated for 600 volts and conform to applicable requirements of NEMA.

2. Conductors shall be stranded copper.

3. Insulation type shall be THWN-2.

4. Conductors shall be sized per the Drawings and the NEC, whichever is greater.

5. Rome Cable Corporation, Southwire Company, Okonite Company, or approved equal.

B. Single Copper Conductors (XHHW / XHHW-2) (260519.C02).

1. Conductors shall be rated for 600 volts and conform to applicable requirements of NEMA.

2. Conductors shall be stranded copper.

3. Insulation type shall be XHHW / XHHW-2.

4. Conductors shall be sized per the Drawings and the NEC, whichever is greater.

5. Rome Cable Corporation, Southwire Company, Okonite Company, or approved equal.

C. Twisted Shielded Pair (TSP) Cables (260519.T01).

1. TSP cable shall be rated for 600 volts and conform to applicable requirements of NEMA.

2. Conductors shall be stranded copper. The gauge shall be 18 AWG unless specifically stated otherwise in the Drawings for a particular instance.

3. TSP cable shall be designed for noise rejection for process control, computer, or data log application in meeting NEMA WC55 requirements:

a. Outer Jacket: 45-mil nominal thickness.

b. Individual Pair Shield: 1.35-mil, double-faced aluminum/synthetic polymer overlapped to provide 100 percent coverage.

c. Dimension: 0.28-inch nominal OD.

d. Conductors:

1) Bare soft annealed copper, Class B, seven-strand concentric, meeting requirements of ASTM B8.

2) 26 AWG, seven-strand tinned copper drain wire.

3) Insulation: 15-mil nominal PVC.

4) Jacket: 4-mil nominal nylon.

5) Color Code: Pair conductors black and white

4. Overall jacket type shall be PVC.

5. Conductors shall be twisted and bonded along their length to maintain uniform twists. The number of pairs shall be as identified in the Drawings with a drain wire and overall aluminum foil shield.

6. Belden, General Cable, AFC Cable Systems, or approved equal.

D. Twisted, Shielded Triad (TST) Cable (260519.T02).

1. Single triad shall be designed for noise rejection for process control, computer, or data log applications meeting NEMA WC 55 requirements.

2. Outer Jacket: 45-mil nominal.

3. Individual Pair Shield: 1.35-mil, double-faced aluminum/synthetic polymer, overlapped to provide 100 percent coverage.

4. Dimension: 0.29-inch nominal OD.

5. Conductors:

   a. Bare soft annealed copper, Class B, seven-strand concentric, meeting requirements of ASTM B8.

   b. 26 AWG, seven-strand, tinned copper drain wire.

6. Insulation: 15-mil nominal PVC.

7. Jacket: 4-mil nylon.

8. Color Code: Triad conductors black, red, and white.

9. Provide Southwire Triplex, or approved equal.

E. Shielded Category 6 (CAT 6) Cable (260519.N01)

1. Conductors:

   a. 24 AWG solid bare copper conductors.

   b. Shielded cable with shielded connectors.

   c. Provide strain relief on connectors.

   d. Rated for 600V.

2. Insulation:

   a. Polyolefin.

   b. 4 non-bonded twisted pair cables formed into a cable core.

3. Color Code:

   a. Pair 1: White/Blue Stripe and Blue

   b. Pair 2: White/Orange Stripe and Orange

   c. Pair 3: White/Green Stripe and Green

   d. Pair 4: White/Brown Stripe and Brown

4. Outer Jacket:

   a. Oil and sunlight resistant PVC with ripcord.

   b. Color red.

5. Electrical Characteristics:

   a. Frequency Range: 0.772-100 MHz.

   b. Attenuation: 32.1dB/100m.

   c. Near-End Crosstalk (NEXT): 39.3 dB.

   d. Power Sum NEXT: 37.3 dB.

   e. Attenuation to Crosstalk Ratio: 7.2 dB.

   f. Power Sum Attenuation to Crosstalk Ratio: 5.3 dB/100m.

   g. Equal Level Far-End Crosstalk (ELFEXT): 22.8 dB.

   h. Power-Sum ELFEXT: 19.8 dB/100m.

i. Return Loss: 17.3 dB.

j. Propagation Delay: 537 ns/100m.

k. Delay Skew: 45 ns/100m.

l. Propagation Delay (Skew), max: 2.5 ns/100m

6. Provide shielded CAT6 RJ45 jacks on each cable.

7. Provide Belden, or approved equal.

F. Fiber Optic Cable (260519.N02)

1. Multimode Fiber shall be 50/125 µm core diameter cable and meet the following requirements:

a. OM3 cable rated for 10Gb/s.

b. OFNP rated cable.

c. Rated for indoor/outdoor use.

d. Optical fibers shall be placed inside a tight buffer tube.

e. Core diameter: 50 ± 3.0 micrometers.

f. Cladding diameter: 125 ± 2.0 micrometers.

g. Core-to-cladding Offset: ≤ 3.0 micrometers.

h. Cladding non-circularity: ≤ 2.0%. Defined as: [1-(min. cladding dia. + max. cladding dia.)] X 100.

i. Core non-circularity: < 6.0%. Defined as: [1-(min. core dia. + max. core dia.)] X 100.

j. Coating Diameter: 245 + 10 micrometers.

k. Jacket color: Aqua

l. Graded index.

m. Numerical Aperture: 0.275 ± 0.015.

n. Attenuation Uniformity: There shall be no point discontinuities greater than 0.2 dB at either 850 nm or 1300 nm.

2. Fiber Optic Cable Connectors

a. All optical fibers shall be terminated with connectors that are type LC.

b. Provide LC connectors, one end with pre-terminated LC connectors and install LC connectors on other end after routed inside PLC panel.

2.02 ACCESSORIES

A. Colored Tape (260519.T01).

1. Colored tape shall be used to identify individual conductors larger than # 6 AWG.

2. 3M colored tape, or approved equal.

B. Cable Ties (260519.T05).

1. Cable ties shall be nylon, adjustable, self-locking, and properly sized for the bundle and force implied.

2. Thomas and Betts, Panduit, or approved equal.

C. Pulling Compound (260519.P01).

1. Pulling compound shall be non-corrosive, noncombustible, nonflammable waxed based lubricant listed for this use.

2. Ideal Company, Polywater, Inc., or approved equal.

PART 3 - EXECUTION

3.01 INSTALLATION

A. General.

1. All identification labeling shall be in compliance with Section 26 05 53 Identification for Electrical Systems.

2. Conductor and cable installations shall meet or exceed the NECA National Electrical Installation Standards.

3. CONTRACTOR shall not exceed the manufacturer's recommendations for maximum pulling tensions or minimum bending radii for respective conductors or cables.

4. Pulling compound is recommended for all conductor or cable installations and shall be used on all installations requiring a mechanical pulling device.

5. CONTRACTOR shall furnish and use a dynamometer on all conductor or cable installations requiring the use of a mechanical pulling device. The dynamometer shall be used to verify the maximum pulling tensions are not exceeded. Should the pulling tensions be exceeded, the conductor or cable shall be removed from the raceway and discarded. It shall not be reused under any circumstance on the project. The CONTRACTOR shall be responsible to make the alterations necessary before attempting to re-pull new conductors or cables.

6. Immediately after pulling in conductors or cables, the pulling compound shall be completely removed from the conductors or cables, from boxes, enclosures, floors, walls, etc.

7. Conductor and cable installations shall be continuous without splices or intermediate terminations unless specifically identified on the Drawings or prior written approval from the ENGINEER.

8. Where conductors or cables are routed in boxes enclosures or cable tray they shall be neatly bundled with cable ties at intervals not to exceed 12 inches on center. The tension for the cable ties shall be set with a tool specifically manufactured for that purpose and of the same manufacturer as the cable tie. Side cutters, linemen pliers and similar tools shall not be used to cut the tail end of the cable tie. The CONTRACTOR shall only use the tool specifically manufactured for this purpose and of the same manufacturer as the cable tie.

9. Conductors and cables shall not be installed until the raceway, boxes, enclosures, conduit bushings, etc. have all been installed. Where conductors or cables have been installed prior to meeting this requirement, the ENGINEER shall at their discretion elect to have the conductors or cables removed, disposed of and replaced with new product.

10. Should the outer jacket of any conductor or cable be damaged in any way, they shall be removed, disposed of and replaced with new product.

11. An equipment grounding conductor shall be installed in all raceways. Size shall be as identified on the Drawings or the NEC, whichever is greater, but in no case shall it be less than # 16 AWG for under 50 volts and no less than # 14 for 50 volts or above.

B. Category Cable Testing

1. The permanent link shall be tested.

2. All test results shall be used by the CONTRACTOR to determine any polarity and noise anomalies and CONTRACTOR shall take immediate corrective action for all anomalies.

3. Test results shall be used by the CONTRACTOR to determine the viability of each sheath for transmission in accordance with the specifications of the cable manufacturer and the requirements imposed by the transmission system. This shall form part of the acceptance procedure for the cable plant. All results obtained by use of pair-scanner testing shall be collated by terminal outlet number and or riser pair number and presented to the OWNER at the conclusion of the testing. Test compilation shall be initialed and dated by the CONTRACTOR's technician performing the test.

4. The CONTRACTOR shall utilize a level-III Fluke, PentaScanner, Wavetek or equal, twisted pair test instrument for the testing of all System Category copper cabling. All Category cable paths shall be tested at each jack for the following parameters and meet the requirements imposed by the TIA/EIA 568-B3 building wiring standard.

5. Category data cabling systems shall be performance verified using an automated test set. This test set shall be capable of testing for the continuity and length parameters defined above and provide for the following tests.

   a. Wire Map.
   b. Cable Length.
   c. Pair-to-Pair NEXT.
   d. Power Sum NEXT.
   e. Attenuation.
   f. Pair-to-Pair ELFEXT.
   g. Power Sum ELFEXT.
   h. Return Loss.
   i. Propagation Delay.
   j. Delay Skew

6. A complete cable certification report shall be provided covering all locations.

7. The CONTRACTOR shall compile test results into the forms that contain all applicable test data. An external drive containing the test data and appropriate application (software) to display such in a windows-based environment shall be provided.

C. Fiber Optic Cable Third Party Testing

1. Perform testing after routing of 12-strand fiber optic cable and installation of all 24 LC connectors.
2. All of the cables/fibers shall be tested by an independent third party.
3. The Contractor shall obtain and pay for the services of a third party. The third party shall have a minimum of five (5) years of verifiable work experience performing fiber testing. A written list of references shall be made available to the District, if requested.
4. The third party shall test all fibers using an OTDR and provide traces with maximum fiber loss in compliance with standard TIA-568-C.
5. 3.5 dB/km @ 850nm
6. 1.5 dB/km @ 1300nm
7. All fiber which fails the testing shall be replaced by the Contractor at no additional cost to the District.
8. All test results shall be provided to the District in electronic (PDF) and hard copy (printed) format.

END OF SECTION

SECTION 26 05 26

GROUNDING AND BONDING FOR ELECTRICAL SYSTEMS

PART 1 - GENERAL

1.01 SUMMARY

A. Section Includes.

1. The section includes requirements for grounding electrodes, equipment grounding and electrical bonding.

1.02 SUBMITTALS

A. Contractor shall submit all the product data in Division 26 at the same time. Piecemeal submittals will be rejected as incomplete.

B. Submittal Format:

1. The product data shall be provided as individual PDFs for each Section, unless otherwise noted for specific items. Each PDF shall be numbered to match the specification Section numbers. Submittals not itemized and labeled as specified will be rejected as incomplete.

2. A submittal is required for each product specified. Each individual product submittal shall have the corresponding Reference Keynote Number (example - 16000.A01) typewritten in the upper right hand corner of the submittal. The submittals within each Section tab shall be in the same sequential order as they are listed in the specification Section. Submittals not containing the Reference Keynote Number will be rejected as incomplete.

3. No typical submittals will be accepted. Each submittal shall be project specific and clearly identify specifically which components or parts are being submitted for approval. Any product submittals, such as a catalog sheet, which do not clearly identify which components or parts are being submitted for approval, will be rejected as incomplete.

4. Submittals in PDF shall include an index, table of contents, or bookmarks with hyperlinks to the associated page of all submitted items. Index shall include each product specified with their corresponding Reference Keynote Number. Electronic submittals not containing a linked index, table of contents, or bookmarks will be rejected as incomplete.

C. Refer to Section 26 05 00 – Common Work Results for Electrical Submittals for additional requirements.

D. Product Data

1. Pursuant to Section 013300 – Submittal Procedures.

2. Manufacturer's data including materials of construction, methods of installation and related information for each item specified in PART 2 PRODUCTS.

PART 2 - PRODUCTS

2.01 MATERIALS

A. Ground Rods (260526.G01).

1. Ground rods shall be provided as shown on the drawings.
2. Ground rods shall be copper clad.
3. Ground rods shall be a minimum of 5/8 inch diameter.
4. Ground rods shall be a minimum of 10 feet long.

B. Compression Connectors (260526.C20).

1. Compression connections shall be provided as shown on the drawings and as required for bonding end-use equipment.
2. Compression connections shall be compress-deforming type, extruded copper material.
3. Compression connections shall be tin electroplated for corrosion resistance.
4. Compression connections shall be ring-type connectors. Forked connectors shall not be used on grounding conductors.
5. Provide Burndy products, or approved equal.

C. Mechanical Connectors (260526.C21).

1. Mechanical connectors shall be provided as shown on the drawings and as required for bonding to pipes.
2. Mechanical connectors shall be UL 467 Listed, copper material.
3. Mechanical connectors shall be sized to match the pipe being bonded.
4. Mechanical connector clamps shall permit parallel or 90° cable connection.
5. Mechanical connectors installed below-grade shall include silicon bronze hardware.
6. Provide Burndy GAR3902 series for above-ground installations, or approved equal.
7. Provide Burndy GAR-BU series for below-grade installations, or approved equal.

D. Ground Test Well (260526.G60).

1. Ground test wells shall be provided as shown on the drawings.
2. Provide Utility Vault box type # 3VB-1012B, or approved equal.
3. Provide Utility Vault traffic cover # 1/3 VCB-C1 cover with custom “GROUND” marking on cover, or approved equal.

E. Ground Bars (260526.B01).

1. Ground bars shall be provided as shown on the drawings.
2. Provide Cutler-Hammer model GBK21, GE model TGK42, Square D model PK27GTA, or approved equal.

F. Ground Bushings (260526.B10).

1. Split bushing shall be insulated, zinc die cast steel.

2. Bushing shall be sized by the Contractor for grounding conductor served.

PART 3 - EXECUTION

3.01 INSTALLATION

A. General.

1. All identification labeling shall be in compliance with Section 26 05 53 Identification for Electrical Systems.

2. Bond separately derived systems, including generators, to the grounding electrode system.

3. Maintain equipment ground continuity throughout the facility by means of a grounding conductor routed in all raceways.

4. Provide grounding conductors pursuant to Section 26 05 19. Conductors shall be copper and shall be sized per the Drawings or the NEC, whichever is greater.

5. Provide ground bushings for all conduits that do not terminate in a hub type fitting and install at the source of power with a bonding conductor fastened to the ground bushing.

6. Provide ground bar kits as shown on the Drawings and where two (2) or more grounding conductors are terminated in a box or enclosure.

7. Install ground rods at the locations and in the number shown on the Drawings or per the NEC, whichever is greater.

8. Bond the grounding electrode system to all metallic water and wastewater piping.

B. Ground Bushings.

1. Provide a grounding type bushing with lug for connection of grounding conductor for conduits that originate from each motor control center section, switchboard, or panelboard:

a. Individually bond these raceways to the ground bus in the equipment.

2. Provide grounding type bushings with lug for a connection to a grounding conductor for all conduits which terminate at a cable tray.

3. Provide grounding type bushings with lugs for connection of grounding conductor at both ends of metallic conduit runs. Bond ground bushings to the grounding system.

4. Provide a green insulated wire-grounding jumper from the ground screw to a box grounding screw and, for grounding type devices, to equipment grounding conductor.

C. Grounding Conductors.

1. Brush grounding conductors clean of debris before connections are made.

2. Strip insulated conductor insulation in a neat, workman like manner where insulated conductors are used.

3. Fasten all conductors securely.

D. Connections.

1. Install connectors according to the manufacturer's directions, using the proper dies, tools, molds, shots, loads, etc. designed specifically for this purpose.

2. Provide irreversible welded type connections to ground rods, re-bar, lightning protection box, building steel etc.

3. Provide compression connector type connections to end use equipment and bolt to the equipment using washers and split lock washers for secure fastening. Bolts shall be grade 5 for grounding connections and shall be tightened to the manufacturer's recommend torque.

E. Ground Test Wells.

1. Install ground test wells at locations shown on the Drawings.

2. Install ground test wells such that the cover is flush with finished grade.

3. Install the ground rod within the well six (6) inches below grade.

4. Provide a minimum of six (6) inches of well compacted, ¾ minus gravel installed beneath the ground well box.

5. Place backfill within the ground test well to allow room for test equipment to be connected to the ground rod.

END OF SECTION

SECTION 26 05 28

SEISMIC RESTRAINTS FOR ELECTRICAL SYSTEMS

PART 1 - GENERAL

1.01 SECTION INCLUDES:

A. Requirements pertaining to seismic restraints for electrical equipment.

1.02 REFERENCED STANDARDS

A. The following is a list of standards which may be referenced in this Section:

1. 2019 Oregon Structural Specialty Code.

2. 2018 International Building Code.

3. American Society of Civil Engineers (ASCE)

a. ASCE 7-16 Minimum Design Loads and Associated Criteria for Buildings and Other Structures

1.03 SUBMITTALS

A. Contractor shall submit all the product data in Division 26 at the same time. Piecemeal submittals will be rejected as incomplete.

B. Submittal Format:

1. The product data shall be provided as individual PDFs for each Section, unless otherwise noted for specific items. Each PDF shall be numbered to match the specification Section numbers. Submittals not itemized and labeled as specified will be rejected as incomplete.

2. A submittal is required for each product specified. Each individual product submittal shall have the corresponding Reference Keynote Number (example - 260000.A01) typewritten in the upper right hand corner of the submittal. The submittals within each Section tab shall be in the same sequential order as they are listed in the specification Section. Submittals not containing the Reference Keynote Number will be rejected as incomplete.

3. No typical submittals will be accepted. Each submittal shall be project specific and clearly identify specifically which components or parts are being submitted for approval. Any product submittals, such as a catalog sheet, which do not clearly identify which components or parts are being submitted for approval, will be rejected as incomplete.

4. Submittals in PDF shall include an index, table of contents, or bookmarks with hyperlinks to the associated page of all submitted items. Index shall include each product specified with their corresponding Reference Keynote Number. Electronic submittals not containing a linked index, table of contents, or bookmarks will be rejected as incomplete.

C. Refer to Section 26 05 00 – Common Work Results for Electrical Submittals for additional requirements.

D. Product Data.

1. Pursuant to Section 01 33 00 – Submittals.

2. Manufacturer's data including materials of construction, equipment weight and related information for each item specified in PART 2 PRODUCTS.

3. Seismic calculations and drawings.

1.04 REQUIREMENTS

A. This project shall comply with the current edition of the Oregon Structural Specialty Code, Oregon Electrical Specialty Code, and ASCE 7-16.

B. The seismic restraints for the project shall be designed to the following design criteria:

1. Reference the seismic design specs in 01 61 10 Seismic Design, 01 61 11 Seismic Anchoring and Bracing, and 01 61 50 Wind Design Criteria.

C. The following electrical systems shall be provided with engineered seismic restraints:

1. Generators and automatic transfer switches

2. Cable tray and cable runway systems.

3. Suspended and supported conduit systems.

4. Switchgear and switchboards.

5. Transformers, wall mounted.

6. Transformers, floor mounted.

7. All electrical enclosures weighing more than 20 lbs. This shall include, but not be limited to, panelboards, control panels, general enclosures, and luminaires.

8. All other Electrical Systems required by ASCE 7-16 and the Oregon Structural Specialty Code.

D. The CONTRACTOR shall pay for and obtain the services of a licensed Structural or Civil LICENSED ENGINEER in the State of Oregon. The LICENSED ENGINEER shall provide the following:

1. Restraint, bracing, and anchorage calculations and details. These details shall be project specific. Typical bracing details for commonly used restraint systems shall be acceptable.

a. The details and calculations shall be suitable for a deferred submittal to the AHJ for the purposes of obtaining an electrical permit.

b. Number, size, capacity, and location of seismic restraints.

c. Backing material to be used in stud wall applications.

d. The details and calculations shall be suitable for installation by the CONTRACTOR.

2. The LICENSED ENGINEER shall provide shop drawings for review and approval by the ENGINEER OF RECORD. The shop drawings shall include:

a. Project-specific restraint details.

b. Project-specific calculations

c. Wet stamped/signed documents.

3. The LICENSED ENGINEER shall perform an on-site inspection of the seismic restraint installation performed by the CONTRACTOR. The LICENSED ENGINEER shall provide a written report of the inspection, including identifying any deficiencies. The report shall be submitted to the ENGINEER OF RECORD for review and approval. The inspection shall be performed by the LICENSED ENGINEER prior to the bracing being covered. The CONTRACTOR shall bear the responsibility of scheduling this inspection.

   a. The CONTRACTOR shall be responsible for installing all seismic restraints per the LICENSED ENGINEER's requirements. Make all corrections required by the LICENSED ENGINEER.

PART 2 - PRODUCTS

2.01 MATERIALS

A. Seismic Restraints (260548.R01).

1. Restraints shall be provided as directed by the SPECIALTY ENGINEER.

2. Material type shall confirm with the requirements of 26 05 29 Hangers & Supports for Electrical Systems.

3. Bracing shall utilize strut channel style systems. The use of cable type systems shall not be permitted.

PART 3 - EXECUTION

3.01 INSTALLATION

A. General.

1. Install all restraints as directed by the SPECIALTY ENGINEER and as required by Code.

END OF SECTION

(THIS PAGE LEFT BLANK INTENTIONALLY)

SECTION 26 05 29

HANGERS AND SUPPORTS FOR ELECTRICAL SYSTEMS

PART 1 - GENERAL

1.01 SUMMARY

A. Section Includes:

1. Requirements pertaining to electrical equipment anchoring and electrical equipment hanging and support.

1.02 SUBMITTALS

A. Contractor shall submit all the product data in Division 26 at the same time. Piecemeal submittals will be rejected as incomplete.

B. Submittal Format:

1. The product data shall be provided as individual PDFs for each Section, unless otherwise noted for specific items. Each PDF shall be numbered to match the specification Section numbers. Submittals not itemized and labeled as specified will be rejected as incomplete.

2. A submittal is required for each product specified. Each individual product submittal shall have the corresponding Reference Keynote Number (example - 26000.A01) typewritten in the upper right hand corner of the submittal. The submittals within each Section tab shall be in the same sequential order as they are listed in the specification Section. Submittals not containing the Reference Keynote Number will be rejected as incomplete.

3. No typical submittals will be accepted. Each submittal shall be project specific and clearly identify specifically which components or parts are being submitted for approval. Any product submittals, such as a catalog sheet, which do not clearly identify which components or parts are being submitted for approval, will be rejected as incomplete.

4. Submittals in PDF shall include an index, table of contents, or bookmarks with hyperlinks to the associated page of all submitted items. Index shall include each product specified with their corresponding Reference Keynote Number. Electronic submittals not containing a linked index, table of contents, or bookmarks will be rejected as incomplete.

C. Refer to Section 26 05 00 – Common Work Results for Electrical Submittals for additional requirements.

D. Product Data.

1. Pursuant to Section 01 33 00 Submittals.

2. Manufacturer's data including materials of construction, equipment weight and related information for each item specified in PART 2 PRODUCTS.

PART 2 - PRODUCTS

2.01 MATERIALS

A. Stainless Steel Hardware (260529.H01).

1. Bolts shall be 316 or 304 stainless steel and sized for the load served and have a hex head unless specifically specified otherwise elsewhere.
2. Nuts shall be 316 or 304 stainless steel hex nut.
3. Washers shall be 316 or 304 stainless steel, USS pattern flat washers.
4. Split lock washers shall be 316 or 304 stainless steel.
5. Threaded rods and couplings shall be 316 or 304 stainless steel.
6. Eye-bolts, u-bolts, bent-bolts and similar connecting hardware shall be 316 or 304 stainless steel.

B. Galvanized Hardware (260529.H11).

1. Bolts shall be hot dipped galvanized steel and sized for the load served and have a hex head unless specifically specified otherwise elsewhere.
2. Nuts shall be hot dipped galvanized steel hex nut.
3. Washers shall be hot dipped galvanized steel, USS pattern flat washers.
4. Split lock washers shall be hot dipped galvanized steel.
5. Threaded rods and couplings shall be hot dipped galvanized steel.
6. Eye-bolts, u-bolts, bent-bolts and similar connecting hardware shall be hot dipped galvanized steel.

C. Stainless Steel Anchors (260529.A01).

1. Wedge or stud anchors installed in concrete or masonry shall be 316 or 304 stainless steel and sized for the load served.
2. Toggle type fasteners shall only be used in hollow sheetrock wall. The wing part of the fastener may be mild steel, but the bolt shall be stainless steel.

D. Galvanized Anchors (260529.A11).

1. Wedge or stud anchors installed in concrete or masonry shall be hot dipped galvanized steel and sized for the load served.
2. Toggle type fasteners shall only be used in hollow sheetrock wall. The wing part of the fastener may be mild steel, but the bolt shall be hot dipped galvanized steel.

E. Stainless Steel Beam Clamps (260529.B01).

1. Beam clamps shall be 316 or 304 stainless steel and sized for the load served.

F. Galvanized Beam Clamps (260529.B11).

1. Beam clamps shall be hot dipped galvanized steel and sized for the load served.

G. Galvanized Strut Channel (260529.S01).

1. Galvanized strut channel shall be hot dipped galvanized after fabrication and shall be a minimum of 12 gauge.

2. Galvanized strut channel shall have factory pre-drilled holes.

H. Stainless Steel Strut Channel (260529.S16).

1. Stainless steel strut channel shall be 316 or 304 stainless steel and shall be a minimum of 12 gauge.

2. Stainless steel strut channel shall have factory pre-drilled holes.

PART 3 - EXECUTION

3.01 INSTALLATION

A. General.

1. Refer to Section 26 05 00, Part 1.13, Paragraph B, Plant Area Work Requirements for specific requirements regarding permitted hardware type use.

2. Hardware shall be set to a torque as recommended by the manufacturer.

3. Washers and split lock washers shall be installed on all bolts, threaded rods and anchors.

4. Lead or plastic type anchors are prohibited from use on the project.

5. When threaded rods are installed in drop-in type anchors, a washer, split lock washer and a jamb nut shall be installed at the anchor to ensure stability.

6. When channel (strut) is installed as a hanger or support from threaded rod, washers, split lock washers and jamb nuts shall be installed on both sides of the strut to lock it in place.

7. Cut ends of channel, strut, threaded rods or other cut fittings shall be filed smooth before installation.

8. Cut ends of hot dipped galvanized channel and strut shall be coated with three coats of cold galvanizing compound after the channel has been filed to prohibit rust.

9. Galvanized channel and strut shall only be installed indoors in non-corrosive areas. Stainless steel channel and strut shall be installed everywhere else including outdoors and in corrosive areas.

10. Concrete anchors shall be installed as per the manufacturer's directions and set using the manufacturer's supplied tool.

11. Threaded rod shall not extend more than one (1) inch beyond the channel, strut or other material it is supporting.

12. Hangers and supports shall be installed level and plumb.

13. Provide strut plastic end caps at the ends of all struts that are exposed to unintentional contact by personnel. Plastic end caps shall be safety yellow finish or color as directed by the OWNER.

14. Hangers and supports shall be installed per the National Electrical Code, Building Code and Structural Code and shall be designed to safely support the load. The ENGINEER may request the CONTRACTOR provide a copy of their design calculations for the seismic requirements and the load served.

B. Dissimilar Metals

1. Provide corrosion protection tape around conduits that are dissimilar material than the hardware material, such as rigid aluminum conduit and stainless steel hardware. Conduits and hardware that are dissimilar metals shall not be installed in direct contact of each other. Tape shall be 20 mil thick. Wrap shall be 50% overlap minimum. The wrap shall extend 1/4" minimum beyond the edge of the strap, strut, or fitting.

END OF SECTION

SECTION 26 05 33

RACEWAY AND BOXES FOR ELECTRICAL SYSTEMS

PART 1 - GENERAL

1.01 SUMMARY

A. Section Includes

1. The Section includes the requirements pertaining to conduits and fittings used to contain electrical conductors and cables.

2. All conductors and cables shall be installed in conduit or approved raceways regardless of which Division the conductors or cables are specified.

1.02 REFERENCES

A. The following is a list of standards which may be referenced in this Section.

1. American National Standards Institute (ANSI).

a. C80.1, Rigid Steel Conduit-Zinc Coated.

2. American Society for Testing Materials (ASTM).

a. A123 E1, Standard Specification for Zinc-Coated (Galvanized) Coatings on Iron and Steel Products.

3. National Electrical Contractors Association (NECA).

a. National Electrical Installation Standards (NEIS).

4. National Electrical Manufacturers Association (NEMA).

a. RN 1, Polyvinyl-Chloride (PVC) Externally Coated Galvanized Rigid Steel Coated and Intermediate Metal Conduit.

b. TC 3, PVC Fittings for use with Rigid PVC Conduit and Tubing.

c. TC 6, PVC and ABS plastic Utilities Duct for Underground Installation.

5. Nation Fire Protection Association (NFPA).

a. 70, National Electrical Code (NEC).

6. Underwriters Laboratories, Inc. (UL).

a. 6, Standard for Safety Rigid Metal Conduit.

b. 50 Enclosures for Electrical Equipment.

c. 514B, Standards for Safety Fittings for Conduit and Outlet Boxes.

d. 514C Standard for Safety Non-Metallic Outlet Boxes, Flush Device Boxes and Covers.

e. 651, Standard for Safety Schedule 40 and 80 PVC Conduit.

f. 651A, Standard for Safety Type EB and Rigid PVC Conduit and HDPE Conduit.

g. 1660, Standard for Safety Liquid-Tight Flexible Nonmetallic Conduit.

h. 360, Standard for Safety Liquid-Tight Flexible Metallic Conduit.

i. 797, Standard for Safety Electrical Metallic Conduit.

1.03 SUBMITTALS

A. Contractor shall submit all the product data in Division 26 at the same time. Piecemeal submittals will be rejected as incomplete.

B. Submittal Format:

1. The product data shall be provided as individual PDFs for each Section, unless otherwise noted for specific items. Each PDF shall be numbered to match the specification Section numbers. Submittals not itemized and labeled as specified will be rejected as incomplete.

2. A submittal is required for each product specified. Each individual product submittal shall have the corresponding Reference Keynote Number (example - 26000.A01) typewritten in the upper right hand corner of the submittal. The submittals within each Section tab shall be in the same sequential order as they are listed in the specification Section. Submittals not containing the Reference Keynote Number will be rejected as incomplete.

3. No typical submittals will be accepted. Each submittal shall be project specific and clearly identify specifically which components or parts are being submitted for approval. Any product submittals, such as a catalog sheet, which do not clearly identify which components or parts are being submitted for approval, will be rejected as incomplete.

4. Submittals in PDF shall include an index, table of contents, or bookmarks with hyperlinks to the associated page of all submitted items. Index shall include each product specified with their corresponding Reference Keynote Number. Electronic submittals not containing a linked index, table of contents, or bookmarks will be rejected as incomplete.

C. Refer to Section 26 05 00 – Common Work Results for Electrical Submittals for additional requirements.

D. Product Data

1. Pursuant to Section 01 33 00 – Submittals.

2. Manufacturer's data including materials of construction, methods of installation and related information for each item specified in PART 2 PRODUCTS.

1.04 QUALITY ASSURANCE

A. PVC Coated Galvanized Rigid Steel Conduit Installation Training and Certification.

1. All installers of PVC Coated Galvanized Rigid Steel Conduit shall be factory trained and certified prior to the installation of any PVC Coated Galvanized Rigid Steel Conduit. CONTRACTOR shall provide written proof of current factory certification for all installers.

B. All PVC Coated Galvanized Rigid Steel Conduit shall be warranted for three (3) years, minimum.

1.05 CONDUIT MATERIAL TYPE

A. The CONTRACTOR shall be permitted to select between the following metallic conduit types on this project: PVC-RAC and RAC or PVC-GRC and GRC, where these types of conduits are required. All conduit run shall utilize steel or aluminum material only, and mixing of conduit types shall not be permitted. Refer to Section 260500 Part 1.12 (B) Plant Area Work Requirements for additional information.

PART 2 - PRODUCTS

2.01 CONDUIT

A. Galvanized Rigid Steel Conduit (GRC) (260533.C01).

1. Shall be mild steel, hot dipped galvanized inside and out.
2. Shall be manufactured in accordance with ANSI C80.1 – Rigid Steel Conduit, Zinc Coated, and UL-6.
3. Conduit fittings shall be hot dipped galvanized malleable iron.
4. Condulets shall form 7 type.
5. The use of three-piece couplings shall be incorporated only when unavoidable and not simply due to poor planning and layout.
6. The use of compression, setscrew and split conduit fittings is unacceptable.
7. Gaskets shall be installed on all condulet covers regardless of the environment they are installed in.
8. Conduit straps shall be hot dipped galvanized malleable iron and incorporate matching conduit spacers when attached directly to walls, ceilings and floors.
9. LTV steel, Triangle PWC, or approved equal.

B. Rigid Aluminum Conduit (RAC) (260533.C50).

1. Rigid aluminum conduit shall be manufactured of 6063-T1 alloy.
2. Manufactured in accordance with:
   a. ANSI C80.5
   b. UL 6A
3. Use of this conduit type is restricted to only locations permitted in Section 26 05 00. Refer to the Plant Area Work Requirements table which specifies the permitted uses for these conduit types.

C. PVC Coated Galvanized Rigid Steel Conduit (PVC-GRC) (260533.C10).

1. Shall meet the manufacturing specification of GRC before PVC coating is applied.
2. Shall be manufactured in accordance with NEMA RN1 Standard for PVC coated GRC.
3. Exterior PVC coating shall not be less than 40 mils thick.
4. The exterior coating shall be sufficiently flexible to permit field bending the conduit without cracking or flaking the coating.

5. Chemically cured two-part urethane coating, at a nominal 2 mil thickness shall be applied to the interior of all conduit and fittings.

6. Female conduit or fitting opening shall have a PVC sleeve extending one-conduit diameter or 2 inches; whichever is less, beyond the opening.

7. The inside diameter of the sleeve shall be the same diameter as the outside diameter of the conduit before the coating is applied.

8. The wall thickness of the sleeve shall be 40 mil minimum.

9. Conduit fittings, condulets, mounting hardware and accessories shall be PVC coated to the same specifications as the conduit.

10. Condulets shall be form 7 type.

11. Gaskets shall be installed on all condulet covers regardless of the environment they are installed in.

12. The screw heads on condulets shall be encapsulated by the manufacturer with a corrosion resistant material, or shall be stainless steel. All condulets shall have the same type of type of screw heads, stainless steel or encapsulated.

13. The use of three-piece couplings shall be incorporated only when unavoidable and not simply due to poor planning and layout.

14. The use of compression, setscrew and split conduit fittings is unacceptable.

15. Ocal Inc., Perma-coat, or approved equal.

D. <u>EMT Conduit (260533.C70)</u>.

1. Hot galvanized steel with corrosion resistance inner diameter coating.

2. Manufactured in accordance with:

   a. ANSI C80.3

   b. UL 797

3. Fittings shall be watertight compression fittings, regardless of whether used indoors or outdoors. Set screw fittings shall not be acceptable.

4. Conduit connectors shall have insulated throats, plastic bushings or ground bushing installed.

E. <u>Liquid-Tight Flexible Aluminum Conduit (LFAC) (260533.C20)</u>.

1. Shall be constructed of a flexible aluminum core with a sunlight resistant thermoplastic outer jacket.

2. Conduit fittings shall be manufactured to the PVC-GRC fitting specifications. Galvanized or non-metallic conduit fittings are unacceptable unless written approval is obtained from the ENGINEER for specific locations before installation.

3. No couplings shall be installed.

4. Sealing rings shall be installed where conduit terminates at an enclosure.

5. Conduit shall be Anaconda, Electriflex, T & B, or approved equal.

6. Sealing ring shall be OZ Gedney 4Q-G, or approved equal.

F. Rigid Non-metallic Conduit (PVC 40) (260533.C30).

1. Shall be schedule 40 PVC unless specifically called out otherwise on the Drawings.
2. Shall be sunlight resistant.
3. Shall be manufactured in accordance with UL-651 Standard.
4. Conduit and fittings shall be securely glued.
5. Provide conduit bell ends at vaults unless specifically called out otherwise on the Drawings.
6. Provide PW Pipe, Carlon, or approved equal.

G. Hazardous Location Flexible Coupling (260533.C40).

1. Shall be listed for Class 1, Division Hazardous Locations.
2. Shall be constructed of flexible brass tubing, insulating wire duct, bronze outer braid, bronze end fittings, and protective PVC coating.
3. Shall be liquid-tight.
4. Shall be Crouse Hinds EC Series, or approved equal.

2.02 CONDUIT ACCESSORIES

A. Conduit Thread Lubricant (260533.L01).

1. Shall be an electrically conductive with copper particles suspended in the product.
2. Provide Kopr-Shield Catalog number CP8-TB, or approved equal.

B. Glue (260533.G01).

1. Glue shall be the wet/dry rated cement commonly referred to as “Blue Glue”.

C. Conduit Duct Spacers (260533.S01).

1. Shall be used in conduit duct banks to maintain uniform spacing of conduits.
2. Shall be non-metallic, interlocking type manufactured for this purpose. Shall be sized to maintain a minimum of 3 inches of separation between conduits.
3. Provide Underground Devices Wunpeece, IPEX Monoblock, or approved equal.

D. Cord Grip (CGB) (260533.C89).

1. Provide stainless steel bodied cord grips with NPT mounted in conduit couplings as identified on the Drawings.
2. Provide Hubbell, Kellems, or approved equal.

E. Pulling Twine (260533.T31).

1. Provide 200 pound tensile strength pulling twine in spare conduits and as called out elsewhere on the Drawings.
2. Greenlee twine, or approved equal.

F. Cord Connector (260533.C90).

1. Provide stainless steel cord grip with integrated stainless steel mesh.
2. Provide Hubbell SCH1000 Series, or approved equal.
3. Provide cord grip with stainless steel integrated mesh for any unsupported cord longer than 59 inches to provide adequate support of the cord.

G. Bushing Plug (260533.P90).

1. Provide OZ Gedney type PPC bushing plug, or approved equal.

H. Conduit System Drain (260533.D33).

1. Provide a conduit system drain designed specifically for the purpose of draining accumulated condensate and to provide ventilation designed to minimize condensation.
2. The device shall UL Standard 514B certified.
3. The bodies and locknut shall be copper-free aluminum construction. The device shall be supplied with a stainless steel screen which may be removed and cleaned as required.
4. Provide a Cooper Crouse-Hinds 0.75 inch drain catalog number CD2-SA, or approved equal.

I. Threaded Hubs (260533.H01).

1. Hubs for threaded attachment of steel conduit to sheet metal enclosures:
2. Construction:
   a. Insulated throat.
   b. PVC coated when used in corrosive areas.
   c. Bonding locknut.
   d. Recessed neoprene O-ring to assure watertight and dust- tight connector.
   e. One half (1/2)-inch through 6-inch steel zinc electroplated.
   f. Aluminum with aluminum conduit.
3. Usage:
   a. All conduits shall use threaded hubs for connections to metal enclosures.
4. Provide Crouse-Hinds Myers Hub, or approved equal.

J. Iron Alloy Galvanized Seismic Deflection Coupling (260533.C91).

1. Use to compensate for movement in any directions between 2 conduit ends that they connect.
2. Shall allow movement of 3/4 inch from the normal in all directions.
3. Shall allow angular movement for a deflection of 30 degrees from normal in any direction.
4. Constructed to maintain electrical continuity of the conduit system.

5. Materials:

   a. End couplings: Bronze or galvanized ductile iron.

   b. Sleeve: Neoprene.

   c. Bands: Stainless steel.

   d. Bonding jumper: Tinned copper braid.

6. Provide Crouse-Hinds XD Series, or approved equal.

K. PVC Seismic Deflection Coupling (260533.S99).

1. Shall permit axial expansion or contraction up to 3/4".

2. Shall permit angular misalignment of the axes of the coupled conduit runs in any direction up to 30-degrees.

3. Shall permit parallel misalignment of the coupled conduit runs in any direction up to 3/4".

4. Watertight flexible neoprene outer jacket that is corrosion resistant. Jacket clamps shall be stainless steel.

5. Non-metallic PVC construction. Suitable for use with PVC 40 and PVC 80 conduit.

6. Thomas & Betts Non-Metallic Expansion/Deflection Coupling, or approved equal.

L. Sealing Fittings (260533.S02).

1. Construction:

   a. 40 percent wire fill capacity.

   b. Shall be rated for horizontal and vertical installations.

   c. PVC-coated when used in corrosive areas.

   d. Malleable ductile iron with steel conduit.

   e. Aluminum with aluminum conduit.

   f. Crouse-Hinds Type EYD where drains are required.

   g. Crouse-Hinds Type EYS where drains are not required.

   h. UL listed for use in Class I, Division 1, Groups A, B, C, D; Class I, Division 2, Groups A, B, C, D; Class II, Divisions 1 and 2; Groups E, F, and G.

2. Sealing compound:

   a. Fiber filler and cement as recommended by the sealing fitting manufacturer.

   b. Approved for the conditions and use.

      1) Not affected by surrounding atmosphere or liquids.

3. Melting point shall be 200 degrees Fahrenheit minimum.

4. Provide Crouse-Hinds, or approved equal.

M. Duct Seal (260533.D44).

1. Seal all conduits passing from the interior to the exterior of a building or structure with flexible/removable duct seal.

2. Provide Hubbell-Raco DS-XLB Duct Seal Weather Sealing, or approved equal.

2.03 DEVICE BOXES

A. Cast Iron Boxes (260533.B01).

1. Shall be cast iron galvanized boxes, have tapered threaded hubs and be the deep FD type in all cases.
2. Boxes shall have internal grounding screw.
3. Shall have external mounting tabs.
4. Whichever manufacturer is submitted and approved, all like boxes on Project shall be of the same manufacturer.
5. Provide OZ Gedney, Crouse-Hinds, or approved equal.

B. PVC Coated Cast Iron Boxes (260533.B10).

1. Shall comply with the specification for cast iron boxes.
2. Shall be coated to the same specifications as the PVC-GRC conduit.
3. Shall have external mounting tabs.
4. Whichever manufacturer is submitted and approved, all like boxes on Project shall be of the same manufacturer.
5. Provide Ocal, Perma-Coat, or approved equal.

C. Galvanized Sheet Metal Boxes (260533.B15).

1. Shall comply with NEMA specifications for sheet metal boxes.
2. Shall not exceed 4-11/16 inches square.

D. General Enclosures (NEMA 1) (260533.E01).

1. Shall be NEMA 1, painted steel.
2. Shall have an aluminum interior mounting panel (backpanel).
3. Shall be constructed of stainless steel with hinged and gasketed door.
4. Provide with necessary accessories and those shown on the Drawings.
5. Provide a grounding kit.
6. Whichever manufacturer is submitted and approved, all like boxes on Project shall be of the same manufacturer.

E. General Enclosures (NEMA 4X) (260533.E40).

1. Shall be NEMA 4X, 316 stainless steel.
2. Shall have an aluminum interior mounting panel (backpanel).
3. Shall be constructed of stainless steel with hinged and gasketed door.
4. Provide with necessary accessories and those shown on the Drawings.
5. Provide a grounding kit.

6. Whichever manufacturer is submitted and approved, all like boxes on Project shall be of the same manufacturer.

F. Large In-Ground H15 Concrete Polymer Box (260533.M21).

1. Shall be polymer concrete in ground box with flush polymer cover.
2. Lid Dimensions shall be 24” x 36” x 18” deep.
3. Lid shall be rated for Tier 15 loading.
4. Bolts shall be provided with tamper resistant bolts for cover.
5. Cover shall have verbiage molded into the top identifying the type of service served such as electric, fiber optic, communications, etc.
6. Provide Old Castle FRP, or approved equal.

G. Large In-Ground Pedestrian HDPE Box (260533.M02)

1. Shall be HDPE in ground box with flush HDPE cover.
2. Lid Dimensions shall be 24” x 24”.
3. Base shall be 36” x 36” x 18” deep.
4. Lid shall be ASTM Pedestrian rated.
5. Bolts shall be provided with penta-head bolts for cover.
6. Cover shall have verbiage molded into the top identifying the type of service served such as electric, fiber optic, communications, etc.
7. Shall be Old Castle Carson 24 Series, or approved equal.

H. Large In-Ground H20 Concrete Box (260533.M31).

1. Provide concrete in ground box with flush H20 steel checkered lid.
2. Lid Dimensions shall be 30” x 17” x 12” deep.
3. Lid shall be rated for Tier 20 loading.
4. Bolts shall be provided with tamper resistant bolts for cover.
5. Cover shall have verbiage molded into the top identifying the type of service served such as electric, fiber optic, communications, etc.
6. Provide Old Castle Christy B1730, or approved equal.

I. Large Manhole (260533.M41).

1. Concrete construction.
2. Shall be 50” x 50” (interior), 56” x 56” (exterior).
3. Height shall be 66” (interior), 72” exterior.
4. Cover all be square with square galvanized steel diamond plate door with locking latch. Door shall open 180-degrees.
5. Old Castle 506-LA or approved equal.

J. Cable Support Arms (260533.A04).

1. Provide non-metallic cable support arms in the power and control vaults.

2. Arms shall be installed such that there is no more than 30 inches between each support arm or duct bank conduit entry.

3. Provide enough cable supports arms to neatly lie in the cables and 25 % spare unused space.

4. Provide Underground Devices, Inc. cable rack and support arms, or approved equal.

K. Vault and In-Ground box Identification Nameplates (260533.N10).

1. Provide stainless steel nameplates, minimum 1/16 inch thick, 1.5 inches high and 3.0 inches long with Black etched characters 1.0 inch high in Times New Roman font.

2. Attach the nameplates, centered on the top of the boxes or vaults with stainless steel rivets with the smooth side exposed.

3. The nameplates shall match the verbiage on the Drawings. If no verbiage exists, the CONTRACTOR shall meet with the ENGINEER to determine the appropriate verbiage and shall note the verbiage on the as-built Drawings.

PART 3 - EXECUTION

3.01 CONDUIT INSTALLATION

A. General Requirements

1. Refer to Section 26 05 00, Part 1.13, Paragraph B, Plant Area Work Requirements for specific requirements regarding permitted hardware type use.

2. All identification labeling shall be in compliance with Section 26 05 53 Identification For Electrical Systems

3. Install conduit runs in accordance with the schematic representation shown on the Drawings.

4. Refer to the Plant Area Work Requirements Table in section 26 05 00 which specifies the permitted uses for conduit types.

5. Metallic conduit runs shall be of the same material type only. Mixing of material types, such as steel and aluminum in the same conduit run shall not be permitted.

   a. PVC-GRC elbows installed in floor slabs shall be permitted to transition to RAC conduit. Provide conduit lubricant thread with anti-corrosion properties on all RAC and PVC-GRC surfaces which make contact.

6. RAC that passes through concrete walls shall be protected against corrosion using bitumastic tape wrap paint or other approved product. Install bitumastic paint per manufacturer's instructions.

7. RAC shall not be installed directly in contact with concrete. Utilize strut channel to maintain separation between the conduit and concrete.

8. RAC shall not be installed in concrete or direct buried.

9. Minimum conduit size shall be 0.75 INCH unless specifically called out otherwise on the drawings.

10. Where raceways are indicated, but the routing is not identified, the routing shall be the CONTRACTOR'S choice and in accordance with the rest of the Contract Documents and the National Electrical Code (NEC).

    a. Install conduit runs as specified with schematic representation indicated on the Drawings and as specified.

    b. Modify conduit runs to suit field conditions, as accepted by the Engineer:

        1) Make changes in conduit locations that are consistent with the design intent but are dimensionally different, or routing to bypass obstructions.

        2) Make changes in conduit routing due to the relocation of equipment.

    c. The Electrical Drawings do not indicate all required junction boxes and pull boxes:

        1) Provide junction boxes and pull boxes to facilitate wire pulling as required to meet the manufacturer's pulling tension requirements and to limit the total number of bends between pull locations..

        2) Install junction boxes and pull boxes at locations acceptable to the Engineer.

    d. The Contractor is responsible for any deviations in general location, conduit size, routing, or changes to the circuit/raceway block diagrams without the express written approval or direction by the Engineer:

        1) The Engineer is the sole source in determining whether the change is constituted as a deviation:

        2) Perform any changes resulting in additional conduits, or extra work from such deviations.

        3) Incorporate any deviations on the Record Documents.

    e. Owner reserves the right to deduct the amount of applicable reimbursement, equivalent to the cost of the engineering effort required to show those unauthorized changes on Record Drawings.

11. Raceways shall be electrically and mechanically complete before the conductors are installed.

12. Routing of conduits may be adjusted to avoid obstructions. Coordinate with other trades prior to installation of raceways. Lack of such coordination shall not be justification for extra compensation and removal and reinstallation to resolve conflicts shall be at the CONTRACTOR's expense.

13. Conduit joints shall be wrench tight, thoroughly grounded, secure and free of obstructions.

14. Conduits shall be reamed.

15. Metallic threads shall all be coated with conduit thread lubricant before assembly. Failure to install the lubricant will result in removal of all conduit and reassembly with the conduit lubricant.

16. Exposed conduits shall be installed parallel or perpendicular to the structural members and surfaces and shall be level and or plumb.

17. When two or more conduits are routed in the same general direction their routing shall be parallel with symmetrical bends.

18. Conduits shall be bent with equipment specifically designed for this purpose and for the specific size and type of conduit.

19. Conduits that are creased or crushed shall be replaced.

20. Install conduits such that they do not interfere with the proper and safe operation of equipment and do not block or otherwise interfere with the ingress and egress and installation of removable hatches and covers.

21. Install expansion joints as needed across expansion joints in the structure and at other locations where necessary to compensate for thermal or mechanical expansion or contraction.

22. Conduits shall be routed at least six (6) inches from high temperature piping, ducts and flues.

23. Conduits that terminate at an enclosure that does not have a threaded hub shall be installed with a Myers type hub and ground ring. No exceptions shall be permitted without prior written approval for specific locations issued by the ENGINEER. Conduits that are permitted to terminate without a Myers type hub or a threaded hub shall have a ground bushing installed. A separate bonding conductor shall be routed to all ground bushings within an enclosure and be bonded to the enclosure and grounding conductor if present.

24. Final connections to dry type transformers, motors, instruments and other equipment requiring a flexible connection shall be made with LFAC conduit. Lengths shall not exceed three (3) feet.

25. All conduits shall be capped throughout construction to prevent entrance of dirt, trash, water, etc.

26. All conduits that are trade size 2.5” and larger which are routed through floors, ceilings or walls below grade shall include a large enough opening to accommodate the installation of Link-Seal. After installation and inspection of the Link-Seal, the CONTRACTOR shall install non-shrink type grout that matches the color of the surrounding material. The grout shall be installed on both sides of the Link-Seal installation.

27. Support conduit runs on water-bearing walls a minimum of 7/8- inch away from wall on an accepted preformed channel:

    a. Do not run conduit within water-bearing walls unless otherwise indicated on the Drawings.

28. When installing conduit through existing slabs or walls make provisions for locating any possible conflicting items where conduit is to penetrate. Use tone

signal or X-ray methods to make certain that no penetrations will be made into existing conduit, piping, cables, post-tensioning cables, etc.

29. All power conduits routed to or from an adjustable frequency drive or a variable frequency drive shall be metallic conduit. Conduits installed underground shall meet the requirements listed below under part B; underground and concrete encased conduit installation.

30. Spare conduits shall be provided with a coupling and threaded male plug that matches the makeup of the conduit for the area they are installed in. The conduit shall terminate at an enclosure when one is called out and exists as part of the Work. Where the spare conduit is stubbed up in a concrete slab for future equipment, it shall be installed flush with the finished floor. Where spare conduits are routed to other areas such as outside a building envelope, in an attic, to a vault, etc., the conduit shall have a female conduit cap installed.

31. All conduits shall be individually identified at every point they terminate. The conduit identification shall be the same as that which is used on the conduit /conductor schedule in the Drawings. Should conduits be installed that are not listed on the conduit schedules, the CONTRACTOR shall add conduit callouts to the as-built conduit schedules and label the conduits accordingly.

32. For innerduct installations, provide liquid tight connectors where appropriate. No splicing of the innerduct is allowed.

B. PVC-GRC Conduit Installation

1. Strap wrenches and vises shall be used to install PVC-GRC conduit to prevent wrench marks and damage to the outer PVC coating. Conduits with damaged coating shall be replaced, repair is unacceptable.

2. Conduits installed in all outdoor locations, corrosive areas and vaults shall be PVC-GRC. PVC-GRC conduit with damaged PVC coating shall be replaced. Repair is unacceptable.

C. Hazardous Locations

1. Within all Class 1, Division 1 Hazardous Locations, provide conduit seal offs and boxes and fittings listed for Class 1, Division 1 Hazardous Locations per the NEC.

2. Flexible connections to motors within a Hazardous Location shall be made with a Hazardous Location Flexible Coupling. Lengths shall not exceed three (3) feet.

D. Conduit Sealing and Drainage

1. Provide conduit drains installed as shown on the Drawing details and in conduit systems as identified on the Drawings. Discuss the installation details with the ENGINEER before underground conduits are covered. Changes that may become necessary in the conduit system resulting from a lack of coordination with the ENGINEER prior to covering underground conduits shall be completed by the CONTRACTOR at no additional expense to the OWNER.

2. Conduit drainage and sealing other than required for hazardous and classified areas:

a. Provide sealing and drainage in vertical drops of long (in excess of 20 feet), exterior, above grade conduit runs at the points at which the conduit enters buildings, switchgear, control panels, lighting panelboards, and other similar enclosures.

b. Provide seal fittings with drains in vertical drops directly above grade for exterior, above grade conduit runs that are extended below grade.

c. Provide conduit seals with drains in areas of high humidity and rapidly changing temperatures:

1) Where portions of an interior raceway pass through walls, ceilings or floors that separate adjacent areas having widely different temperatures.

d. Provide conduit seals similar to O/Z Gedney (Type CSM) on all conduits between corrosive and non-corrosive areas.

e. Seal one end only of all underground conduits at highest point with O/Z Gedney sealing (non-hazardous) filling, or equal.

3. Install seals with drains at any location along conduit runs where moisture may condense or accumulate. This requirement includes, but is not limited to, the following locations: control panels, junction boxes, pullboxes, or low points of conduit.

4. All conduits which enter/leave a building shall be sloped away from the building to prevent the accumulation of water within the building.

5. All conduits which enter/leave a building shall be sealed with an approved duct seal.

E. RAC Installation

1. RAC that passes through concrete walls shall be protected against corrosion using bitumastic tape wrap. Install bitumastic paint per manufacturer's instructions.

2. RAC shall not be installed directly in contact with concrete. Utilize strut channel to maintain separation between the conduit and concrete.

3. RAC shall not be installed in concrete or direct buried.

4. RAC shall be installed using aluminum strut and straps as identified in 260500 Plant Area Work Requirements. Where stainless steel strut and straps are required, install bitumastic tape around the RAC conduit to prevent the aluminum from making contact with the stainless steel.

F. EMT Conduit Installation

1. EMT Conduit shall be installed only where permitted as described within 260500 Plant Area Work Requirements.

2. EMT shall not be used in the same conduit run that utilizes RAC.

G. Dissimilar metals

1. Provide corrosion protection tape around conduits that are dissimilar material than the hardware material, such as rigid aluminum conduit and stainless steel hardware. Conduits and hardware that are dissimilar metals shall not be installed

in direct contact of each other. Tape shall be 20 mil thick. Wrap shall be 50% overlap minimum. The wrap shall extend 1/4" minimum beyond the edge of the strap, strut, or fitting.

H. Underground Conduit Installation

1. Underground conduits shall be PVC except as specifically noted differently elsewhere.

2. Conduits routed under a concrete slab shall be routed under the vapor barrier. The conduits shall be routed deep enough so the radius of the conduit stubbed up through the slab is completely below grade. The vapor barrier shall be sealed at every point a conduit penetrates the barrier as per the requirements specified for the vapor barrier.

3. All power conduits routed to or from an adjustable frequency drive or a variable frequency drive shall be metallic conduit. Where routed underground these conduits shall be PVC-GRC type conduit.

4. Underground conduits shall be routed as shown on the Drawings.

5. Power conduits shall be separated from all other conduits by a minimum of 12 inches and when required to cross other conduits it shall be done at a 90 degree angles.

6. Conduit bends greater than 45 degrees shall utilize PVC-GRC conduit for the bend.

7. Conduit runs stubbed out of concrete shall make a transition to PVC-GRC at least six (6) inches before leaving the encasement.

8. Conduits routed in structural concrete shall be routed in such a manner as to not interfere with the structural integrity of the concrete. The ENGINEER shall approve CONTRACTOR's proposed conduit routing before installation. It is the CONTRACTOR's responsibility to coordinate conduit routing with the ENGINEER well before it is scheduled to be installed. Conduits shall be stubbed up directly under the enclosure or device their will serve. The CONTRACTOR is responsible to coordinate with the other trades prior to installation of raceways. Lack of coordination shall not be justification for extra compensation and removal and re-installation of conduits to resolve conflicts shall be done at the CONTRACTOR's expense.

9. Where conduits are stubbed up out of a concrete floor or slab, the PVC-GRC conduit shall extend two (2) inches above finished floor or grade including housekeeping pads before transitioning to any other type of conduit.

10. Underground conduit shall have a minimum of 24 inches of cover unless specifically called out differently on the Drawings.

11. Conduits for the local Utilities shall be of the conduit type they specify, which may or may not include HDPE or fiberglass.

12. Conduits routed from or to buildings or structures shall be concrete encased unless specifically called out differently on the Drawings.

I. Concrete Encased Conduit Installation

1. Concrete encased duct banks shall include the duct spacers, rebar, copper ground conductor and any other items called out on the Drawing detail. Concrete for duct banks shall be 3,000 PSI minimum with red powered dye sprinkled generously on top of the concrete after pouring and before it begins to set-up.

2. Conduit duct spacers shall be installed for all concrete encased conduits and the spacers shall be raised off the bottom of the trench with 1.5 inch minimum concrete dobies. The spacers shall be space no more than 60 inches linearly and joints in each horizontal layer of conduits shall be staggered a minimum of 12 inches from the layer above and below.

J. Miscellaneous

1. Provide cord grip for any unsupported cord.

3.02 BOX INSTALLATION

A. General.

1. All identification labeling shall be in compliance with Section 26 05 53 Identification For Electrical Systems.

2. Install boxes and enclosures in accordance with the schematic representation as indicated on the Drawings.

3. Boxes and enclosures shall be mounted level and plumb.

4. Boxes and enclosures shall not be altered, holes drilled, etc. in any way that may compromise the NEMA rating of the enclosure or box.

5. Boxes and enclosures shall be mounted with stainless steel hardware.

6. Boxes and enclosures shall be bonded to the equipment grounding conductor.

7. Surface mounted enclosures and boxes shall be spaced off the surface at least ¼ inch in damp or wet locations.

8. Boxes and enclosures with threaded hubs or punched holes shall have the opening match the conduit size. The use of reducing bushings or reducing washers is unacceptable.

9. Galvanized cast iron boxes are permitted only where GRC conduit is permitted.

10. PVC-coated boxes shall be used wherever PVC-GRC conduit is required.

11. Enclosures shall be provided whenever a junction or pull box larger than 4 inches square is required.

12. Provide a divider whenever a box contains conductors of different potentials that the code requires separation.

13. Install vaults and in-ground box tops (lids) such that they are ½ inch above finished grade to prevent water ingress.

14. Conduits entering or exiting vaults shall do so at via the precast ducts or knock-outs only. Conduits shall not enter or exit through the floor or any other area not design specifically for that purpose and pre-approved by the ENGINEER.

15. Wherever conductors smaller than # 1 AWG are routed through a vault, the conductors shall be encased in non-metallic flexible conduit such as ENT where they are inside the vault. The ENT shall be routed on the cable support arms and securely fastened.

16. Cable support arms shall be installed in vaults on a spacing not to exceed 2’ – 0” on center. Cables and or ENT shall be secured side by side to the cable support arms via tie-wraps. Cables or ENT shall be the same length in the vaults and shall be routed around the interior walls of the vault. The cables/conductors shall make a minimum of one complete (360 degree) circle in the vault before exiting through another conduit.

END OF SECTION

(THIS PAGE LEFT BLANK INTENTIONALLY

SECTION 26 05 53

IDENTIFICATION FOR ELECTRICAL SYSTEMS

PART 1 - GENERAL

1.01 SUMMARY

A. Section Includes

1. Requirements for identification of electrical, safety, measurement, data, fire alarm, security, monitoring, control and related components and equipment.

1.02 SUBMITTALS

A. Contractor shall submit all the product data in Division 26 at the same time. Piecemeal submittals will be rejected as incomplete.

B. Submittal Format:

1. The product data shall be provided as individual PDFs for each Section, unless otherwise noted for specific items. Each PDF shall be numbered to match the specification Section numbers. Submittals not itemized and labeled as specified will be rejected as incomplete.

2. A submittal is required for each product specified. Each individual product submittal shall have the corresponding Reference Keynote Number (example - 26000.A01) typewritten in the upper right hand corner of the submittal. The submittals within each Section tab shall be in the same sequential order as they are listed in the specification Section. Submittals not containing the Reference Keynote Number will be rejected as incomplete.

3. No typical submittals will be accepted. Each submittal shall be project specific and clearly identify specifically which components or parts are being submitted for approval. Any product submittals, such as a catalog sheet, which do not clearly identify which components or parts are being submitted for approval, will be rejected as incomplete.

4. Submittals in PDF shall include an index, table of contents, or bookmarks with hyperlinks to the associated page of all submitted items. Index shall include each product specified with their corresponding Reference Keynote Number. Electronic submittals not containing a linked index, table of contents, or bookmarks will be rejected as incomplete.

A. Refer to Section 26 05 00 – Common Work Results for Electrical Submittals for additional requirements.

C. Product Data

1. Pursuant to Section 01 33 00 – Submittals.

2. The initial submittal shall contain all the products, samples and data base specified. An initial submittal that does not contain all the specified data shall be returned as incomplete.

D. Samples

1. Provide a sample of each type and size of nameplate, label, tag and means of attachment specified for approval by the OWNER.

E. Quality Assurance / Quality Control Submittals

1. The CONTRACTOR shall be responsible for submitting a data base of all identification nameplates, labels, panel schedules and tags required for the Work. The data base shall be developed in the most current edition of Microsoft Excel for the OWNER's future use.

F. Closeout Submittals

1. As-built electronic copy of the identification Excel data base.

PART 2 - PRODUCTS

2.01 MATERIALS

A. Circuit Breaker Panel Schedules (260553.S21).

1. Shall be created in Microsoft Excel software. One copy of each schedule shall be included in the closeout submittals.

2. Shall be printed on 60 - 70 lb white card stock.

B. Heat Sealing Lamination Products (260553.L11).

1. Provide documents in laminate when specified. Laminate shall be clear, non-yellowing and sized for various sized documents.

2. Shall be 5 mil in thickness.

C. Plastic Nameplates (260553.P05).

1. Shall have a black background with white engraved letters. Nameplates for emergency functions shall be red background with white engraved letters. The nameplates shall have self adhesive rated for the environment which they are installed. The font type shall be consistent on all nameplates.

2. Provide products supplied by E.R. Perry Signs & Engraving, or approved equal.

D. Stainless Steel Nameplates (260553.S15).

1. Shall be 316 or 304 stainless steel.

2. 1.5 inches high by 6.0 inches long minimum.

3. The nameplate shall be between .025 - .050 inches thick.

4. Text shall be as large as possible, shall be center justified and shall be stamped.

5. The stainless steel nameplate shall be attached with stainless steel rivets. No less than four (4) rivets shall be used to securely fasten the nameplate.

6. Provide products supplied by E.R. Perry Signs & Engraving, or approved equal.

E. Stainless Steel Component and Device Tags (260553.S25).

1. Shall be stainless steel.

2. Two (2) inch round.

3. The tag shall be between .025 - .050 inches thick.

4. The text shall be center justified and shall be stamped.

5. Standard size for characters shall be 0.25 inches high.

6. The stainless steel tags shall be attached to devices with stainless steel beaded chain which shall be provided with two (2) to three (3) inches of slack when the tag is attached to the device. The hole in the tag for the beaded chain shall be at the top and centered on the tag. The hole shall be large enough that the chain will not bind in the hole.

7. Provide products supplied by E.R. Perry Signs & Engraving, or approved equal.

F. Conduit Tags (260553.S35).

1. Shall be 316 or 304 stainless steel.

2. Nominally 0.75 inches high by 3.0 inches long.

3. Characters shall be 0.25 inches high. And shall be machine punched or durably embossed.

4. Conduit tags shall be products readily available and manufactured for this purpose.

5. The stainless steel conduit tags shall be attached with stainless steel cable ties.

6. Provide Panduit Permanent Identification System products, or approved equal.

G. Epoxy Gel (260553.E05).

1. Shall be a two component, 100 % solids, moisture tolerant, high modulus, high strength, structural epoxy paste adhesive.

2. Provide Sika type Sikadur 31, Hi-Mod Gel, or approved equal.

H. Conduit Trench Marker Tape (260553.T21).

1. Shall be a minimum of six (6) inches wide, polyethylene tape manufactured for this purpose.

2. Color code for tape shall be as listed below and the verbiage on the tape shall identify the type of system i.e. “Caution Buried Electric Line Below”.

   a. Electric Power – RED

   b. Fiber Optic – ORANGE

   c. Data/Phone – ORANGE

   d. Control – ORANGE

3. Provide products manufactured by Seaton Identification Products, Harris Industries, or approved equal.

I. Conductor and Cable Identification Sleeves (260553.T31).

1. The identification sleeves shall be properly sized for the cable or conductor.

2. Sleeves shall be white with black machine generated characters.

3. Provide Brady wire and cable sleeves, or approved equal.

J. Flexible Identification Tape (260553.T56).

1. Shall be white, red, yellow, clear or as otherwise specified tape with black characters.

2. Standard tape size shall be 0.5 inch high unless specified otherwise and shall have extra strength adhesive rated for indoor and outdoor use.

3. Provide products manufactured by Brother, or approved equal.

K. Colored Tape (260553.T73).

1. Shall be rated for adhesion to steel and PVC conduits.

2. Shall be two (2) inches wide nominal and available in the colors specified.

3. Shall have extra strength adhesive rated for indoor and outdoor use.

4. Color code for tape shall be as listed below.

   a. Fire Alarm / Life Safety - RED

   b. Fiber Optic – ORANGE

   c. IT Data/Phone – BLUE

   d. Generator power – ORANGE

5. Provide DUCK, 3M, or approved equal.

L. Arc Flash Labels (260553.A11).

1. Reference Section 26 05 73 – Overcurrent Protective Device Coordination Study for additional details.

2. Shall be self adhesive and manufactured specifically for this purpose.

3. Shall be four (4) inches high by six (6) inches wide minimum.

4. Shall be based on the latest edition requirements of the National Fire Protection Association (NFPA) 70E – Standard for Electrical Safety.

5. At a minimum the label shall contain the following information.

   a. Date calculation was performed and who did the calculation.

   b. Danger or Warning level based on the incident energy. When above 40 cal/cm sq. the label shall read “Danger”.

   c. Shall identify the hazard as being both arc flash and shock hazard.

   d. Shall clearly state the incident energy and the level of personal protective equipment (PPE) required.

   e. Provide labels manufactured by Dura Label, SKM System Analysis, Inc., or approved equal.

M. Conductor Color Coding (260553.C89).

1. Conductors shall be colored as specified in the table below. The technical specification requirements for the conductors are specified elsewhere.

Conductor Color Coding

System	Conductor	Color
All Systems	Equipment Grounding	Green
IT / Data	Data Cable Sheath (outer cover)	Blue
24 Volt DC	Positive	Blue
	Negative	White w/ Blue Stripe
	Discrete Input Line (hot leg) Side	Blue
	Discrete Input Switch Leg	Blue w/ White Stripe
	Discrete Output Line (hot leg) Side	Blue
	Discrete Output Switch Leg	Blue w/ Orange Stripe
24 Volt AC	Hot Leg	Red
	Neutral	White
	Discrete Input Line (hot leg) Side	Red
	Discrete Input Switch Leg	Red w/ Blue Stripe
120 Volt AC Control	Hot Leg	Red
	Neutral	White
	Discrete Input Line (hot leg) Side	Red
	Discrete Input Switch Leg	Red w/ White Stripe
	Discrete Output Line (hot leg) Side	Red
	Discrete Output Switch Leg	Red w/ Orange Stripe
120/240 Volt Single Phase	Hot Leg # 1	Black
	Hot Leg # 2	Red
	Neutral	White
120/208 Volt Three Phase	Phase A	Black
	Phase B	Red
	Phase C	Blue
	Neutral	White
120, 208, 277 Volt	Switch Legs	Pink
480 Volt Three Phase	Phase A	Brown
Wye or Delta Corner Tap	Phase B	Purple
	Phase C	Yellow
	Neutral	Gray
120/240 Delta Three Phase	Phase A	Brown
	Phase B	Orange
	Phase C	Yellow
	Neutral	Gray

PART 3 - EXECUTION

3.01 INSTALLATION

A. Circuit Breaker Panel Schedules

1. CONTRACTOR shall request panel schedules in Microsoft Excel software and printing instructions from ENGINEER. CONTRACTOR shall update the panel schedules to reflect as-built conditions. Print schedules on 60 - 70 lb white card stock with black ink.

2. Schedules shall be neatly trimmed with 1/8" white space borders.

3. The finished schedules shall be laminated and neatly trimmed with 1/8" of laminate border.

4. A sample layout shall be submitted to OWNER for approval prior to installation.

5. Attach white Velcro to the panel door and the back of the panel schedule. Velcro shall, at a minimum, be attached to all four corners of the panel schedule.

B. Plastic Nameplates

1. Provide plastic nameplates for panelboards, motor control centers, motor starters, disconnects, variable frequency drives, control panels and similar equipment. The verbiage on the nameplate shall be as identified on the Contract Drawings. The CONTRACTOR shall request the required verbiage from the ENGINEER should it not be available on the Contract Drawings.

2. In addition to the nameplate identifying the equipment, a second nameplate shall be provided that identifies the source of power for the equipment i.e. “Fed From PNL208-1”.

3. Typically the nameplates shall be centered and installed near the top of the equipment.

4. Nameplates shall be black with white characters unless specified otherwise.

5. Nameplates on emergency panels shall be red with white characters.

C. Stainless Steel Nameplates

1. Provide stainless steel nameplates for in-ground boxes, cast-in concrete boxes, electrical boxes larger than four (4) inches in any direction, boxes installed outdoors and vaults.

2. The nameplates shall be installed on the lid/cover and attached with 1/8 inch, stainless steel rivets in all four corners at a minimum.

3. The verbiage on the nameplate shall be as identified on the Contract Drawings. The CONTRACTOR shall request the required verbiage from the ENGINEER should it not be available on the Contract Drawings.

D. Stainless Steel Component and Device Tags

1. Provide stainless steel component and device tags for instruments, valves, pipes and similar equipment.

2. The tag shall be attached with a stainless steel beaded chain and attached in a manner and location which enables it to be read without interfering with the operation of the component or device. Whenever possible it shall not be attached to a removable part of the equipment.

3. The verbiage on the tag shall be as identified on the Contract Drawings. The CONTRACTOR shall request the required verbiage from the ENGINEER should it not be available on the Contract Drawings.

E. Conduit Tags

1. Provide stainless steel conduit tags at each point that a conduit terminates at or within an enclosure or box. The stainless steel tag shall be attached with stainless steel cable ties.

2. Where conduits enter a vault and are installed flush with the walls, the conduit tag shall be installed directly above the conduit entry and attached to the wall of the vault with epoxy gel.

3. The verbiage on the tag shall be as identified on the Contract Drawings. The CONTRACTOR shall request the required verbiage from the ENGINEER should it not be available on the Contract Drawings.

4. Where conduits terminate at a box in an inaccessible location such as behind a sheetrock wall, conduit labels are not required.

F. Conduit Trench Marker Tape

1. Provide conduit trench marker tape for single or multiple buried conduits. The color and verbiage shall match the type of system installed. If the trench contains several systems, one of which is electric power, the tape shall be for electric power.

2. The tape shall be installed 12 inches below finished grade and shall be laid flat and parallel to the conduits.

G. Conductor and Cable Identification Sleeves

1. Provide heat shrink, machine generated, white labels with black characters for all cables and conductors. Explanation is provided below on how various systems shall be identified. In many cases the information necessary to develop the unique identification labels will be provided on the Contract Drawings. The verbiage required for the identification shall be as identified on the Contract Drawings. The CONTRACTOR shall request the required verbiage from the ENGINEER should it not be available or clear based on the information provided on the Contract Drawings.

2. The labels shall be installed between 6 to 8 inches from the end and shrunk. Conductors shall be labeled at all splices and points of termination.

3. Power conductors and cables, including the neutral and the ground conductors shall all be identified individually. The identification label will be developed as follows: The first set of characters will be the equipment code identifying the source of power “PNL208” followed by the circuit number “CKT 12” and a forward slash followed by the room number where the utilization is located and then the

utilization equipment. Using the first sequential unit heater in room 2334 as an example, the label would read “PNL208-CKT 12/ 2334-UH-1”.

4. Control conductors, including grounds, shields, etc. shall be identified individually. The label shall identify the point of origin and the utilization equipment it serves. The identification label will be developed as follows: An sample label for a conductor fed from terminal strip 2, terminal block 33 in control panel # 1 (CP-1) to an terminal strip 1, terminal block 4 in automatic transfer switch # 1 (ATS-1) would read CP-1 TS2-TB33 / ATS-1 TS1-TB4.

5. Security conductors and cables shall be identified in the same manner as control conductors.

6. Fire alarm and life safety conductors and cables shall be identified in the same manner as control conductors.

7. Direct Digital Control (DDC) conductors and cables shall be identified in the same manner as control conductors.

8. Local Area Network (LAN) cables shall be identified with the rod mount number, highband number and the network room number from which it is connected. The verbiage required for the identification shall be as identified on the Contract Drawings. The CONTRACTOR shall request the required verbiage from the ENGINEER should it not be available or clear based on the information provided on the Contract Drawings.

9. Telephone, cameras, speakers and other IP cables connected to the LAN shall be identified in the same manner as the LAN cables.

H. Device and Faceplate Identification Labels

1. Devices, faceplates, security devices, fire alarm & life safety devices, small electrical boxes 4 inches or less located indoors and similar equipment shall be identified utilizing flexible identification tape. Typically the CONTRACTOR shall provide machine generated, white labels with black characters except as specified otherwise. Explanation is provided below on how various systems shall be identified. In many cases the information necessary to develop the unique identification labels will be provide on the Contract Drawings. The verbiage required for the identification shall be as identified on the Contract Drawings. The CONTRACTOR shall request the required verbiage from the ENGINEER should it not be available or clear based on the information provided on the Contract Drawings.

2. LAN faceplates and device shall be identified in the upper information window by the network room number that serves it. Each data jack shall be labeled individually and the label shall include the rod mount and highband number. An individual data jack fed from rod mount 2, highband 34 would read “2.34”.

3. Power receptacles faceplates (cover plates) shall state the panel and circuit number. A typical label might read “PNL208-1-CKT 15”.

4. Light switches faceplate shall state the panel and circuit number(s). A typical label might read “PNL208-2-CKT 15&17”.

5. Light fixture labels shall be attached adjacent to the ballast and shall follow the same requirements of listing the panel and circuit number. A typical label might read “PNL480-1-CKT 9&11”.

6. Interior emergency light fixtures shall have a unique 0.5 inch adhesive dot applied to facilitate tracking routine maintenance required for emergency lighting. The dots shall be red when they have an integral battery back-up and orange when fed from an emergency panel powered by a generator.

7. Exterior light fixtures shall be uniquely identified to facilitate tracking of routine maintenance. The identification shall be shown on the Contract Drawings. The identification label will be developed as follows: The first set of characters will be the facility code “SLC-012” followed by the equipment code “LGT” and then a sequence number such as“14”. A typical label might read “SLC-012-LGT-14”. The labels shall be self adhesive, yellow vinyl with black characters. The label shall be installed on the bottom of the fixture when mounted 5 feet above finished grade (AFG) or higher and on the top when mounted lower than 5 feet. Labels shall be 0.5 inches high with 0.375 inch characters when mounted lower than 10 feet AFG. Labels shall be 0.75 inches high with .0.5 inch characters when mounted between 10 and 20 feet. Labels shall be 1.0 inches high with .0.75 inch characters when mounted higher than 20 feet AFG.

8. Security Cameras, keypads, door switches, motion detectors, etc. shall be identified as shown on the Contract Drawings. The identification label will be developed as follows: The first set of characters will be the facility code “SLC-061” followed by the room number (2334) and then the equipment code “KEY” and lastly by a sequential number such as “21”. A typical label might read “SLC-061-2334-KEY-21”.

9. Fire alarm / life safety devices such as pull stations, door magnets, horns, beacons, etc. shall be identified as shown on the Contract Drawings. The identification label will be developed as follows: The first set of characters will be the facility code “SLC-032” followed by the room number (2334) and then the equipment code “PS” and lastly by a sequential number such as “11”. A typical label might read “SLC-032-2334-PS-11”.

10. Direct digital control components and accessories such as dampers, actuators, VAV, etc. shall be identified as shown on the Contract Drawings. The identification label will be developed as follows: The first set of characters will be the facility code “SLC-007” followed by the room number (2334) and then the equipment code “VAV” and lastly by a sequential number such as “43”. A typical label might read “SLC-007-2334-VAV-43”.

I. Colored Tape

1. Colored tape shall be installed on conduits used for the systems listed below. The tape shall have extra strength adhesive rated for indoor and outdoor use and two (2) inches wide. CONTRACTOR shall install a single wrap around the circumference of the conduit at five (5) foot intervals. In addition the exterior of junction or pull boxes installed along these raceways shall be painted entirely with 2 coats of paint that matches the tape color.

a. Fire alarm / life safety – RED

b. Data / IT – BLUE

c. Fiber Optic – ORANGE

d. Generator power routed to or from emergency panels – ORANGE

J. Arc Flash Labels

1. The CONTRACTOR shall install arc flash labels on all electrical equipment as required by the NEC and National Fire Protection Association (NFPA) 70E – Standard for Electrical Safety. The minimum requirements for the labels are itemized in PART 2 Products.

2. The CONTRACTOR shall be responsible for providing the coordination study and arc flash analysis necessary to calculate the incident energy and personal protective equipment (PPE) data required on each label.

3. An as-built coordination study and arc flash analysis shall be prepared at the Contractor's expense and be performed by a Professional Engineering licensed in the State of Oregon. The calculations shall utilize SKM Power Tools software and an electronic and hard copy shall be submitted to the Owner for approval. Arc Flash Labels with all data specified by the current edition of the NFPA 70E (Standard for Electrical Safety) and Occupational Safety & Health Administration (OSHA) shall be provided by the Contractor.

4. The CONTRACTOR is responsible to make the adjustments to the protective devices and circuit breakers as specified in the coordination study.

END OF SECTION

SECTION 26 05 73

OVERCURRENT PROTECTIVE DEVICE COORDINATION STUDY

PART 1 - GENERAL

1.01 SUMMARY

A. Section Includes:

1. The section includes the requirements for a Short-Circuit Study, Protective Device Coordination Study, Arc Flash Study, and Arc Flash Warning Labels.

1.02 REFERENCES

A. Referenced Standards:

1. American National Standards Institute (ANSI).
2. Institute of Electrical and Electronics Engineers (IEEE):
   a. 242, Recommended Practice for Protection and Coordination of Industrial and Commercial Power Systems.
   b. 399, Recommended Practice for Industrial and Commercial Power System Analysis.
   c. 1584, Guide for Performing Arc Flash Hazard Calculations.
3. National Electrical Manufacturers Association (NEMA): Z535.4, Product Safety Signs and Labels.
4. National Fire Protection Association (NFPA):
   a. 70, National Electrical Code (NEC).
   b. 70E, Standard for Electrical Safety in the Workplace.
5. Occupational Safety and Health Standards (OSHA): 29 CFR, Part 1910, Subpart S, Electrical.

1.03 SUBMITTALS

A. Contractor shall submit all the product data in Division 26 at the same time. Piecemeal submittals will be rejected as incomplete.

B. Submittal Format:

1. The product data shall be provided as individual PDFs for each Section, unless otherwise noted for specific items. Each PDF shall be numbered to match the specification Section numbers. Submittals not itemized and labeled as specified will be rejected as incomplete.
2. A submittal is required for each product specified. Each individual product submittal shall have the corresponding Reference Keynote Number (example - 260000.A01) typewritten in the upper right hand corner of the submittal. The submittals within each Section tab shall be in the same sequential order as they are listed in the specification Section. Submittals not containing the Reference Keynote Number will be rejected as incomplete.

3. No typical submittals will be accepted. Each submittal shall be project specific and clearly identify specifically which components or parts are being submitted for approval. Any product submittals, such as a catalog sheet, which do not clearly identify which components or parts are being submitted for approval, will be rejected as incomplete.

4. Submittals in PDF shall include an index, table of contents, or bookmarks with hyperlinks to the associated page of all submitted items. Index shall include each product specified with their corresponding Reference Keynote Number. Electronic submittals not containing a linked index, table of contents, or bookmarks will be rejected as incomplete.

C. Product Data:

1. Pursuant to 01 33 00 Submittals.

2. Arc Flash Warning Label templates.

1.04 QUALITY ASSURANCE

A. Short circuit, protective device coordination, and arc flash studies shall be provided by a corporately and financially independent, unbiased, testing authority. The testing authority shall be independent of manufacturers, suppliers, and installers of equipment being tested. The testing authority shall have a minimum of five (5) years experience testing similar projects.

1.05 SEQUENCING AND SCHEDULING

A. Initial complete protective device coordination and arc flash studies shall be submitted within 90 days after approval of initial short circuit study.

B. Revised short circuit, protective device studies, arc flash studies, and arc flash labels shall be submitted 10 days before energizing electrical equipment.

C. Final short circuit, protective device studies, and arc flash studies shall be completed prior to project completion. Final version of study shall include as-built equipment, materials, and parameter data or settings entered into equipment based on study.

D. Submit final arc flash labels described herein and in compliance with NEMA Z535.4 prior to project completion.

PART 2 - STUDIES AND PRODUCTS

2.01 SHORT CIRCUIT STUDY

A. General

1. Prepare a Short Circuit Study in accordance with IEEE 39.

2. Cable impedances shall be based on copper conductors.

3. Bus impedances shall be based on copper buses.

4. Cable and bus resistances shall be calculated at 25 degrees Celsius.

5. Medium voltage cable reactance shall be based on typical dimensions for standard cables with 133% insulation levels.

6. 600-volt cable reactance shall be based on the typical dimensions of THWN-2 conductors.

7. Transformer impedances shall be 92.5% of nominal impedance based on tolerances specified in IEEE C57.12.00.

B. The Short Circuit Study final report shall include the following:

1. Basic description, purpose, and scope of the study.

2. Descriptions of the scenarios evaluated and identification of the scenario used to evaluate short circuit ratings.

3. Explanation of bus and branch numbering system.

4. Prevailing conditions.

5. Selected base per unit quantities.

6. Source impedance data, including electric utility system, generator, and motor fault contribution characteristics.

7. Impedance diagrams.

8. Zero-sequence impedance diagrams.

9. One line diagrams and associated tabulations of data used to model the system components.

10. Calculation methods and assumptions.

11. Typical calculations.

12. Tabulation of calculation quantities.

13. Results, conclusions, and recommendations.

C. The short circuit interrupting and momentary (when applicable) duties for an assumed three-phase bolted fault shall be calculated at each:

1. Utility Service point.

2. Medium Voltage Switchgear.

3. Low Voltage Switchgear.

4. Switchboard.

5. Motor Control Center.

6. Automatic Transfer Switch.

7. Distribution Panel.

8. Branch Circuit Panelboard.

9. Future load contributions as shown on the One-Line Diagram.

10. Any additional point within the power distribution system as specified by the Engineer.

D. The Short Circuit Study shall be used to verify the following:

1. Equipment and protective devices are applied within their ratings.
2. Adequacy of distribution equipment bus bars to withstand short circuit stresses.
3. Cable and bus way sizes for ability to withstand short circuit heating, in addition to normal current loads.

E. Provide a tabulation of equipment short circuit versus available fault duties. The tabulation shall identify percentage of rated short circuit current and clearly identify equipment with insufficient ratings.

1. General Data
   a. Short circuit reactance of rotating machines.
   b. Cable and conduit material data.
   c. Bus data.
   d. Transformer data.
   e. Circuit resistance and reactance values.
2. Short Circuit Data
   a. Fault impedances.
   b. X/R ratios.
   c. Asymmetry factors.
   d. Motor contributions.
   e. Short circuit kVA.
   f. Symmetrical and asymmetrical fault currents.
3. Equipment Evaluation
   a. Equipment bus bracing, equipment short circuit rating, transformer, cable, busway.
   b. Maximum fault current available.

F. Provide a written summary at the end of the Short Circuit Study, which shall include the following:

1. Selected equipment deficiencies.
2. Results of short circuit study.
3. Conclusions and recommendations.

G. The Contractor shall be notified in writing of existing circuit protective devices improperly rated for new fault conditions.

H. The Short Circuit Study data shall be revised for as-built conditions.

2.02 PROTECTIVE DEVICE SETTINGS STUDY

A. General

1. The Protective Device Settings Study shall be used to determine recommended circuit breaker settings that provide a balance between equipment protection and selective device operation that is optimum for the electrical system. Provide an analysis of all possible operating scenarios which will be or have been

influenced by the proposed or completed additions or changes to the system. The study shall be prepared in accordance with ANSI/IEEE 399 and ANSI/IEEE 242.

B. The Protective Device Settings Study shall include the following:

1. Basic description, purpose, and scope of the study.
2. Descriptions of the scenarios evaluated and identification of the scenario used to evaluate short circuit ratings.
3. Prevailing Conditions.
4. One Line Diagrams.
5. Explanation of bus and branch numbering system.
6. Calculation methods and assumptions.
7. Typical calculation.
8. Tabulation of calculated quantities.
9. Time-current curves for overcurrent protection devices.
10. Results, conclusions, and recommendations.

C. The Protective Device Settings Study shall be used to verify the following protective device time-overcurrent settings:

1. Long Time Delay Pick Up.
2. Long Time Delay.
3. Short Time Delay Pick Up.
4. Short Time Delay.
5. Instantaneous Trip.
6. Ground Fault Pick Up.
7. Ground Fault Delay.
8. Current Transformer (CT) Ratios.
9. Time-Dial Multiplier.
10. Tap Settings.

D. Tabulation of calculated data shall include the following:

1. General Data
   a. Overcurrent protection device location, manufacturer, type, range of adjustment, IEEE device number, CT ratio.
2. Equipment evaluation
   a. Recommended settings or device size.
   b. Referenced time-current curve.

E. Provide a written summary at the end of the Protective Device Settings Study, which shall include the following:

1. Selected equipment deficiencies.
2. Results of coordination study.
3. Conclusions and recommendations.

2.03 ARC FLASH STUDY

A. Perform an Arc Flash Hazard Study after short circuit and protective device setting recommendations have been completed, reviewed, and accepted by the Engineer. Perform the analysis under worst-case arc flash conditions for all modes of operation. Provide an analysis of all operating scenarios which will be or have been influenced by the proposed or completed additions to the subject system.

B. The Arc Flash Hazard Study shall be performed in accordance with NFPA 70E, OSHA 29 CFR, Part 1910 Subpart S, and IEEE 1584.

C. The Arc Flash Hazard Study shall include the following:

1. Basic description, purpose, and scope of the study.
2. One Line Diagram.
3. Short Circuit Study.
4. Protective Device Settings Study.
5. Calculation methods and assumptions.
6. Typical calculation.
7. Evaluation summary spreadsheet.
8. Conclusions and recommendations.

D. Base Calculation: For each major part of the power distribution system, the following shall be determined:

1. Flash hazard protection boundary.
2. Limited approach boundary.
3. Restricted approach boundary.
4. Prohibited approach boundary.
5. Incident energy level.
6. Personal protection equipment (PPE) hazard/risk category.
7. Type of PPE required.

E. Produce arc flash warning labels that list items in Part C above and provide the following additional items:

1. Bus name.
2. Bus voltage.

F. Produce detail sheets that list items in Part C above and the following items:

1. Bus name.

2. Upstream protective device name, type, and settings.

3. Bus-to-line voltage.

G. Produce arc flash evaluation summary sheet listing the following additional items:

1. Bus name.

2. Upstream protective device name, type, and settings.

3. Bus-to-line voltage.

4. Protective device bolted fault current.

5. Arcing fault current.

6. Protective device trip/delay setting.

7. Breaker opening time.

8. Solidly grounded column.

9. Equipment type.

10. Gap.

11. Arc flash boundary.

12. Working distance.

13. Incident energy.

14. Required protective fire rated clothing type and class.

H. Analyze short circuit, protective device coordination, and arc flash calculations and highlight equipment that is determined to be underrated or causes incident energy values greater than 40 cal/cm2. Provide proposals to reduce energy levels.

I. Provide a written summary at the end of the Arc Flash Hazard Study, which shall include the following.

1. Equipment manufacturer's information used to prepare study.

2. Assumptions made during study.

3. Copy of one line diagram.

4. Arc flash evaluations summary spreadsheet.

5. Bus detail sheets.

6. Arc flash warning labels printed in color on adhesive backed labels.

2.04 ARC FLASH WARNING LABELS

A. Provide arc flash warning labels per NEC 110.16

B. All identification labeling shall be in compliance with Section 26 05 53 Identification For Electrical Systems

PART 3 - EXECUTION

3.01 GENERAL

A. Adjust relay and protective device settings according to reduce arc flash while maintaining coordination between downstream circuit breakers and the upstream main circuit breaker.

B. Perform minor modifications to equipment as required to accomplish conformance with short circuit study.

C. Notify Contractor in writing of required major equipment modifications.

D. Provide laminated one-line diagrams (minimum size 11” x 17”) to post on interior of electrical room doors.

E. Provide arc flash warning labels on equipment as specified on this Section.

END OF SECTION

SECTION 26 05 83

WIRING CONNECTIONS

PART 1 - GENERAL

1.01 SUMMARY

A. Section Includes.

1. This Section includes requirements for conductor termination methods.

2. Additional conductor termination means and methods are specified in Section 40 63 00 Control System Equipment, Section 40 70 00 Instrumentation for Process Systems, Section 40 72 00 Level Measurement, and Section 40 78 00 Panel Mounted Equipment.

1.02 SUBMITTALS

A. Contractor shall submit all the product data in Division 26 at the same time. Piecemeal submittals will be rejected as incomplete.

B. Submittal Format:

1. The product data shall be provided as individual PDFs for each Section, unless otherwise noted for specific items. Each PDF shall be numbered to match the specification Section numbers. Submittals not itemized and labeled as specified will be rejected as incomplete.

2. A submittal is required for each product specified. Each individual product submittal shall have the corresponding Reference Keynote Number (example - 26000.A01) typewritten in the upper right hand corner of the submittal. The submittals within each Section tab shall be in the same sequential order as they are listed in the specification Section. Submittals not containing the Reference Keynote Number will be rejected as incomplete.

3. No typical submittals will be accepted. Each submittal shall be project specific and clearly identify specifically which components or parts are being submitted for approval. Any product submittals, such as a catalog sheet, which do not clearly identify which components or parts are being submitted for approval, will be rejected as incomplete.

4. Submittals in PDF shall include an index, table of contents, or bookmarks with hyperlinks to the associated page of all submitted items. Index shall include each product specified with their corresponding Reference Keynote Number. Electronic submittals not containing a linked index, table of contents, or bookmarks will be rejected as incomplete.

C. Refer to Section 26 05 00 – Common Work Results for Electrical Submittals for additional requirements.

D. Product Data

1. Pursuant to Section 01 33 00 – Submittals.

2. Manufacturer's data including materials of construction, methods of installation and related information for each item specified in PART 2 PRODUCTS.

PART 2 - PRODUCTS

2.01 MATERIALS

A. Small Compression Connectors (260583.C01).

1. Insulated fork, ring or splicing (butt) connectors shall be provided for # 10 AWG or smaller conductors that splice together or terminate with a screw other than in a terminal block.

2. Connectors shall be properly sized for the conductor and for the stud used.

3. Burndy, Panduit, Thomas and Betts, or approved equal.

B. Insulated Wire Ferrules (260583.F10).

1. For all conductors terminating on terminal blocks, install crimp-on, insulated plastic sleeve ferrules on each conductor. Install ferrules with a crimping tool provided by the ferrule manufacturer for that purpose.

2. Wire ferrules shall be color coded to match the DIN color code.

3. Weidmuller, Panduit, American Electric, Inc., or approved equal.

C. Medium and Large Compression Connectors (260583.C10).

1. Non-insulated copper compression connectors shall be provided for # 8 AWG and larger conductors.

2. The connector shall have a voltage and current rating equal to or exceeding the conductor.

3. The barrel shall be long enough to accommodate a minimum of two (2) circumferential crimps.

4. The connectors shall be properly sized for the conductor.

5. Burndy, Panduit, Thomas and Betts, or approved equal.

D. Electrical Spring Connectors (Wire Nuts) (260583.W01).

1. Provide properly sized spring connectors for the size and number of conductors spliced.

2. Ideal, 3M, Thomas and Betts, or approved equal.

E. Insulated Mechanical Multi-Tap Connectors (260583.M01).

1. Provide properly sized, insulated, mechanical, multi-tapped connectors for splices.

2. Burndy, Panduit, Thomas and Betts, or approved equal.

2.02 ACCESSORIES

A. Varnished Cambric Tape 260583.T30).

1. Varnished cambric insulating tape shall be bias cotton cambric fabric tape, oil primed and coated with high-grade yellow electrical insulating varnish.

2. The tape shall not contain any adhesives.

3. 3M – Scotch # 2510, or approved equal.

B. Electrical Tape (260583.T40).

1. General electrical tape shall be premium grade, all weather vinyl electrical insulating tape.

2. 3M – Scotch 33+, or approved equal.

C. Thin Wall Heat Shrink Tubing (260583.T01).

1. Thin walled heat shrink tubing shall be flame retardant and made of cross-linked polyolefin.

2. The tubing shall have a minimum operating temperature of – 55 to + 135 degrees Celsius.

3. Burndy, Panduit, or approved equal.

D. Heavy Wall Heat Shrink Tubing (260583.T10).

1. Thin walled heat shrink tubing shall be flame retardant and made of cross-linked polyolefin.

2. The inside diameter shall be coated with an adhesive sealant to protect against moisture and corrosion.

3. The tubing shall have a minimum operating temperature of – 55 to + 135 degrees Celsius.

4. Burndy, Panduit, or approved equal.

E. Heavy Wall Heat Shrinkable End Caps (260583.T20).

1. Heavy walled heat shrink tubing shall be flame retardant and made of cross-linked polyolefin.

2. The inside diameter shall be coated with an adhesive sealant to protect against moisture and corrosion.

3. The tubing shall have a minimum operating temperature of – 55 to + 135 degrees Celsius.

4. Burndy, Panduit, or approved equal.

PART 3 - EXECUTION

3.01 INSTALLATION

A. General

1. All identification labeling shall be in compliance with Section 26 05 53 Identification For Electrical Systems.

2. Care shall be taken when terminating conductors to avoid kinking, cutting or puncturing the jacket or allowing contamination by grease, oil or water.

3. Care shall be taken when terminating conductors to properly support the conductors and to avoid undue pressure on the connector or utilization equipment.

4. Conductors shall be terminated by use of lugs, pressure type connectors wire nuts or terminal blocks. Wrapping conductors around a screw type terminal is not acceptable.

5. Insulate all connections and splices with Scotch 33+ tape and Scotchfill, pre-molded plastic covers, or heat shrink tubing and caps.

6. Compression connectors shall be installed using the tool and die provided by the same manufacturer as the connectors and as per their directions.

7. Compressions on connectors used for # 8 AWG conductors and larger shall have a minimum of two (2) circumferential crimps.

8. Indenter type crimps on compression connectors shall not be used on conductors larger than # 10 AWG.

9. Additional conductor termination means and methods including terminal blocks and control conductors are specified in Section 40 63 00 Control System Equipment, Sections 40 70 00 Instrumentation for Process Systems, Section 40 72 00 Level Measurement, , and Section 40 78 00 Panel Mounted Equipment.

10. Connectors shall be installed as per the manufacturer's directions.

11. Insulated wire ferrules shall be provided for conductors terminated on terminal blocks utilizing a crimping tool provided by the ferrule manufacture specifically for this purpose.

12. Where wire ducts in enclosures exist, conductors shall be grouped together and routed in the wire ducts and shall be fanned out to the terminals.

13. Wire nuts shall be used on conductors # 10 AWG or less and only for splicing conductors at light fixtures, at receptacles and motors. No other splicing of conductors with wire nuts are permitted unless specifically identified on the Drawings.

14. All spare conductors shall be identified individually, neatly coiled and fastened with cable ties. The coil shall be labeled to describe its origin. Spare conductors shall be left long enough to be neatly routed and terminate anywhere within the enclosure.

15. Conductors installed outdoors which are not terminated the same day, shall have heavy wall heat shrinkable end caps installed the same day they are pulled in. The end caps shall remain in place until the day they are terminated.

16. Heavy wall heat shrink tubing shall be installed over splices or over the barrel of connectors installed outdoors.

17. Thin wall heat shrink tubing shall be installed over splices or over the barrel of connectors installed indoors.

18. Thin wall heat shrink tubing shall be installed over twisted shielded pair cable where the cable is stripped back.

19. As connections are set with a torque wrench, a black felt marker shall be used to mark across the bolt, nut or screw indicating the torque has been set.

20. Insulated Mechanical Multi-Tap Connectors shall be utilized for splices located at in-ground lighting and power boxes. It may also be used for motor terminations.

B. Terminations For Motors.

1. Conductors sized # 10 AWG or less for phase conductors shall be connected with wire nuts set tight. The wire nuts shall be wrapped with premium grade electrical tape with a 50 percent overlap, installed in a clockwise rotation to hold the connector in place and to keep debris out of the connector.

2. The equipment grounding conductor shall be terminated on a lug identified for this use. If the motor is not supplied with a lug, a ring or compression type lug shall be used.

3. Conductors sized larger than # 10 AWG shall be terminated with compression connectors properly sized. The connectors shall be bolted together in a pigtail type fashion using stainless steel bolts, flat washers, lock washers and nuts. They shall have a torque as recommended by the bolt manufacturer for the bolt size used.

4. The bolt shall not be longer than the minimum necessary for the connection. The connectors shall be wrapped with varnished cambric tape with a 50 percent overlap covering the end of the connectors and extending one inch beyond the connector barrel. The varnished cambric tape shall be held in place by two layers of premium quality electrical tape, each layer with a 50 percent overlap.

5. Insulated Mechanical Multi-Tap Connectors may be used for motor terminations in lieu of the compression connectors and varnished cambric tape method.

6. Conductors shall be left as long as practical for termination in the motor terminal box.

END OF SECTION

(THIS PAGE LEFT BLANK INTENTIONALLY)

SECTION 26 08 00

COMMISSIONING OF ELECTRICAL SYSTEMS

PART 1 - GENERAL

1.01 SUMMARY

A. Section Includes.

1. Definitions

2. Requirements for commissioning.

1.02 DEFINITIONS

A. Commissioning Verification Period.

1. The commissioning period begins after the ENGINEER has approved the Functional Test Certification demonstration with the control software, the specified demonstration and training is complete, punch list deficiencies are corrected and the final operation and maintenance manuals are submitted and approved. The duration of the commissioning verification period is 14 days without significant interruption.

B. Significant Interruption.

1. Significant interruption may include any of the following events.

a. Failure of the CONTRACTOR to maintain qualified onsite start-up personnel as specified.

b. Failure of critical equipment unit, system, or sub-system that is not satisfactorily corrected within two (2) hours after the failure.

c. Failure of noncritical equipment unit, system, or sub-system that is not satisfactorily corrected within twenty-four (24) hours after the failure.

d. As may be determined by the ENGINEER.

1.03 REQUIREMENTS FOR COMMISSIONING

A. Commissioning of the facility shall be completed prior to substantial completion.

B. CONTRACTOR shall provide for realistic durations in the progress schedule for the commissioning activities.

C. Provide the labor, medium, chemicals, tools, equipment, instruments and services required for, and incidental to, completing commissioning.

D. Demonstrate satisfactory operation within the facility of the equipment and systems in actual operation as a functional unit.

E. Conduct commissioning for a period of fourteen (14) continuous days without significant interruption.

F. The commissioning verification period shall restart with the correction of each significant interruption.

G. Correct defects in material and workmanship immediately following their discovery.

H. Provide for maintenance until substantial completion. This includes the required maintenance activities during the commissioning verification period.

I. Perform maintenance pursuant to the operation and maintenance data requirements for the new facility during and following the commissioning verification period and prior to issuance of a certificate of substantial completion.

J. As of the date of substantial completion, OWNER's staff shall be responsible for operation and maintenance of the new facilities. This excludes any issues identified as warranty matters.

PART 2 - PRODUCTS – NOT USED

PART 3 - EXECUTION – NOT USED

END OF SECTION

SECTION 26 21 00

LOW-VOLTAGE ELECTRICAL SERVICE ENTRANCE

PART 1 - GENERAL

1.01 SUMMARY

A. The Section includes electrical utility requirements and contact information.

1.02 SYSTEM DESCRIPTION

A. Electrical Service

1. The CONTRACTOR shall coordinate all work and inspections with the ENGINEER, the local jurisdiction having authority, Pacific Power (PP&L) (electric utility), and the OWNER.

2. The CONTRACTOR is responsible for all costs for this work including fees for permits, and fees for the electric utility.

3. The CONTRACTOR shall provide all necessary installation services that are not provided by the electric utility.

4. The CONTRACTOR shall provide all necessary components that are not provided by the electric utility. All components shall be as specified by the electric utility. Components include conduits, pull rope, vaults, pull boxes, transformer pads, current transformer cabinets, meter socket enclosures, bollards, and ancillary items.

5. The CONTRACTOR shall comply with the electric utility's electric service requirements.

B. Temporary Service.

1. The CONTRACTOR shall be responsible to coordinate work with the local electrical utility serving the facility.

C. Utility Information:

1. Pacific Power Project: # 8207796

2. Engineer: Elke Vath

3. Contact: elke.vath@pacificorp.com

PART 2 - PRODUCTS – NOT USED

PART 3 - INSTALLATION

3.01 QUALITY CONTROL

A. All work shall comply with the electric utility's electrical service requirements, electric utility's specifications, and the Contract Documents.

B. CONTRACTOR shall coordinate work with other trades to avoid conflicts, delays and unnecessary interference with operation of the facility during construction.

C. CONTRACTOR shall provide all materials and incidentals required for a complete and operable system, even if not indicated explicitly by the Contract Documents.

D. The routing of the conduit is critical and shall be coordinated with the utility, ENGINEER and OWNER.

END OF SECTION

SECTION 26 22 00

LOW-VOLTAGE TRANSFORMERS

PART 1 - GENERAL

1.01 SUMMARY

A. Section Includes.

1. Requirements for low voltage dry type transformers and their installation.

1.02 REFERENCES

A. The following is a list of Standards which may be referenced in this Section.

1. American National Standards Institute (ANSI).

a. C57.12.50 and C89.1 Ventilated Dry Type Power Distribution Transformers.

2. National Fire Protection Association (NFPA).

a. 70 – National Electrical Code (NEC).

3. National Electrical Manufacturers Association (NEMA).

a. ST.20 – Dry Type Transformers for General Application.

4. Underwriters Laboratory, Inc (UL).

a. 506 – UL Standard for Safety for Specialty Transformers.

1.03 SUBMITTALS

A. Contractor shall submit all the product data in Division 26 at the same time. Piecemeal submittals will be rejected as incomplete.

B. Submittal Format:

1. The product data shall be provided as individual PDFs for each Section, unless otherwise noted for specific items. Each PDF shall be numbered to match the specification Section numbers. Submittals not itemized and labeled as specified will be rejected as incomplete.

2. A submittal is required for each product specified. Each individual product submittal shall have the corresponding Reference Keynote Number (example - 260000.A01) typewritten in the upper right hand corner of the submittal. The submittals within each Section tab shall be in the same sequential order as they are listed in the specification Section. Submittals not containing the Reference Keynote Number will be rejected as incomplete.

3. No typical submittals will be accepted. Each submittal shall be project specific and clearly identify specifically which components or parts are being submitted for approval. Any product submittals, such as a catalog sheet, which do not clearly identify which components or parts are being submitted for approval, will be rejected as incomplete.

4. Submittals in PDF shall include an index, table of contents, or bookmarks with hyperlinks to the associated page of all submitted items. Index shall include each product specified with their corresponding Reference Keynote Number. Electronic submittals not containing a linked index, table of contents, or bookmarks will be rejected as incomplete.

C. Refer to Section 26 05 00 – Common Work Results for Electrical Submittals for additional requirements.

D. Product Data

1. Pursuant to Section 01 33 00 – Submittal.

2. Manufacturer's data including materials of construction, methods of installation and related information for each item specified in PART 2 PRODUCTS.

3. Manufacturer's data including outline and support point dimensions of enclosures and accessories, unit weight, voltage, KVA, impedance ratings, tap configurations, insulation type and temperature rise.

1.04 DELIVERY, STORAGE AND HANDLING

A. Acceptance at Site.

1. Verify nameplate data meets the specified requirements.

2. Store in a clean, dry space.

B. Storage and Protection.

1. Handle in accordance with the manufacturer's written instructions.

2. Lift only with lugs provided.

3. Handle carefully to avoid damage to transformers internal components, enclosure and finish.

PART 2 - PRODUCTS

2.01 MANUFACTURED UNITS

A. Transformer (262200.T01).

1. Product description: DOE 2016, factory assembled, air-cooled, dry type transformers, ratings as shown on the Drawings.

2. Unit kVA and voltage shall be as shown on the Drawings.

3. Insulation system and average winding temperature rise for rated KVA shall be Class 220 with a 115 degree C rise.

4. Case temperature shall not exceed 30 degrees C rise above ambient temperature at warmest point at full load.

5. Sound level shall meet NEMA ST 20 Standard.

6. Ground core and coil assembly to enclosure by means of a visible flexible copper grounding strap.

7. Units up to and including 112.5 KVA shall be suitable for wall or floor mounting.

8. Coil conductors shall be continuous aluminum windings with terminations brazed or welded.

9. Enclosure shall be NEMA 1 type unless specifically called out differently on the Drawings. Transformers shown outdoors shall be NEMA 3R.

10. Cooling shall be factory assembled air cooled type.

11. Isolate core and coil from enclosure using vibration-absorbing mounts.

12. Terminations shall be suitable for termination copper conductors without any special modifications.

13. Nameplate shall include transformer connection data and overload capacity based on rated allowable temperature rise.

14. The basis of design is for the manufacture specified. Any modifications to the design that may become necessary due to the approval of an "or equal" product shall be the responsibility of the CONTRACTOR.

15. Provide factory-installed noise and vibration isolation. The noise and vibration isolation shall consist of the following:

    a. Isolation bushings on transformer core for vibration isolation.

    b. Insulation on the interior of the enclosure of noise isolation.

    c. Vibration isolation feet.

    d. Rubber isolation pads shall be provided.

16. Provide Eaton model number DT-3, Siemens, Square D, or approved equal.

2.02 SEISMIC CERTIFICATION

A. Seismic Bracing Certification (262200.S01).

1. The Manufacturer shall provide a seismic certificate.

2. Contractor shall provide seismic anchor bolts for all transformers shown on the Drawings.

3. The seismic anchor bolts shall be designed by a licensed Structural Engineer in the State of Oregon. The Structural Engineer shall provide wet stamped and signed seismic calculations and drawings.

4. The seismic anchor bolt design shall comply with the Manufacturer's seismic requirements.

5. The Contractor shall provide transformer approved shop drawings to the Structural Engineer. The shop drawings shall indicate the weight and dimensions of the transformer. The Contractor shall provide any additional information required by the Structural Engineer to perform the seismic calculations.

2.03 ACCESSORIES

A. Transformer Isolation Pads (262200.P20).

1. Provide rubber isolation pads under the transformer at each anchor point. The product used shall be manufactured specifically for this purpose.

2. The pads shall be 1.0 inch thick minimum.

B. Wall Mount Brackets (262200.W01).

1. The transformer shall be mounted on the wall when shown as such on the Drawings.

2. The basis of design is for the manufacture specified. Any modifications to the design that may become necessary due to the approval of an “or equal” product shall be the responsibility of the CONTRACTOR.

3. The wall brackets shall be supplied by the manufacturer of the transformer and be rated for use with the transformer supplied.

PART 3 - EXECUTION

3.01 INSTALLATION

A. General.

1. All identification labeling shall be in compliance with Section 26 05 53 Identification For Electrical Systems.

2. The wall bracket shall be anchored as recommended by the manufacturer and as shown on the Drawings, whichever is more stringent. The mounting shall be designed to withstand a seismic zone 4 event.

3. The transformer shall be connected to the grounding electrode system and treated as a separately derived system.

4. The transformer shall be set level and plumb.

5. Mount the transformer on isolation pads with a pad located at each anchor point.

6. Line and load conduits shall include a minimum of two (2) feet of LFAC flexible conduit.

END OF SECTION

SECTION 26 24 13

SWITCHBOARDS

PART 1 - GENERAL

1.01 SUMMARY

A. Section Includes

1. This section includes requirements for Low Voltage Switchboards.

B. The Switchboards listed on this project are OWNER Furnished, CONTRACTOR installed. CONTRACTOR shall coordinate with the OWNER and the OWNER's System Integrator to install the switchboards at the locations identified on the Drawings.

1.02 REFERENCES

A. The following is a list of Standards that may be referenced in the Section.

1. NEMA Standard PB 2 Deadfront Distribution Switchboards.

2. Underwriters' Laboratories (UL) Standard No. UL 891 Switchboards.

3. ANSI C37.90, Standard Relays and Relay Systems Associated with Electric Power Apparatus.

4. National Electrical Code (NEC).

1.03 DELIVERY, STORAGE, HANDLING

A. Equipment Handling

1. Equipment shall be handled and stored in accordance with manufacturer's instructions. One (1) copy of these instructions shall be included with the equipment at time of shipment.

1.04 COMMISSIONING

A. Provide commissioning in accordance with Section 26 08 00.

PART 2 - PRODUCTS

2.01 SEISMIC BRACING

A. Provide seismic bracing for the swtichboards required by the International Building Code and Oregon Structural Specialty Code.

B. The design of the seismic anchoring and bracing system shall be by a licensed Structural Engineer in the State of Oregon. The CONTRACTOR shall arrange and pay for the services of the licensed Engineer.

C. Wet stamped and signed calculations and drawing of the seismic anchoring and bracing system shall be submitted to the Engineer for review and approval

D. Include Manufacturer's seismic certificate.

PART 3 - EXECUTION

3.01 INSTALLATION

A. All identification labeling shall be in compliance with Section 26 05 53 Identification For Electrical Systems

B. Installation shall be in accordance with the manufacturers' instructions.

C. The switchboard shall be mounted on a concrete equipment pad. The equipment pad shall be 4” high with a minimum 2” reveal on each side of the switchboard enclosure. The switchboard shall be arranged so that the uppermost operating handle shall not exceed 6 ft 6 in from the floor.

D. Field wiring shall be grouped by circuit and tie wrapped. Terminations shall not be stressed.

3.02 FIELD QUALITY CONTROL

A. Test and verify installation in conformance with Section 26 01 08.

B. In addition, make the following minimum tests and checks before energizing the equipment:

1. Megger terminals and buses at two times rated voltage, phase to phase and phase to ground after disconnecting devices sensitive to megger voltage.

2. Remove all current transformer shunts after completing secondary circuit.

3. Check all mechanical interlocks for proper operation.

4. Vacuum clean all interior equipment.

5. Adjust and test all circuit breakers and relays in accordance with Section 16080.

6. Confirm and record all protective relay settings.

END OF SECTION

SECTION 26 24 16

PANELBOARDS

PART 1 - GENERAL

1.01 SUMMARY

A. Section Includes.

1. This Section includes the requirements for panelboards, mini-power centers, utility meter sockets and current transformer (CT) can.

1.02 REFERENCES

A. The following is a list of Standards which may be referenced in this Section.

1. National Fire Protection Association (NFPA).

a. 70 – National Electrical Code (NEC).

2. National Electrical Contractors Association (NECA).

a. 5055 - National Electrical Installation Standards (NEIS).

3. National Electrical Manufacturers Association (NEMA).

a. AB 1 – Molded Case Circuit Breakers.

b. KS 1 – Enclosed and Miscellaneous Distribution Equipment Switches (600 volts maximum).

c. PB 1 – Panelboards

d. PB 1.1 – Instructions for Safe Installation, Operation and Maintenance of Panelboards Rated 600 Volts or Less.

4. International Electrical Testing Association (NETA).

a. Acceptance Testing Specifications.

5. Underwriters Laboratory, Inc. (UL).

a. 50 – Enclosures for Electrical Equipment.

b. 67 – Panelboards.

c. 489 – Molded Case Circuit Breakers and Circuit Breaker Enclosures.

1.03 SUBMITTALS

A. Contractor shall submit all the product data in Division 26 at the same time. Piecemeal submittals will be rejected as incomplete.

B. Submittal Format:

1. The product data shall be provided as individual PDFs for each Section, unless otherwise noted for specific items. Each PDF shall be numbered to match the specification Section numbers. Submittals not itemized and labeled as specified will be rejected as incomplete.

2. A submittal is required for each product specified. Each individual product submittal shall have the corresponding Reference Keynote Number (example -

26000.A01) typewritten in the upper right hand corner of the submittal. The submittals within each Section tab shall be in the same sequential order as they are listed in the specification Section. Submittals not containing the Reference Keynote Number will be rejected as incomplete.

3. No typical submittals will be accepted. Each submittal shall be project specific and clearly identify specifically which components or parts are being submitted for approval. Any product submittals, such as a catalog sheet, which do not clearly identify which components or parts are being submitted for approval, will be rejected as incomplete.

4. Submittals in PDF shall include an index, table of contents, or bookmarks with hyperlinks to the associated page of all submitted items. Index shall include each product specified with their corresponding Reference Keynote Number. Electronic submittals not containing a linked index, table of contents, or bookmarks will be rejected as incomplete.

C. Refer to Section 26 05 00 – Common Work Results for Electrical Submittals for additional requirements.

D. Product Data

1. Pursuant to Section 01 33 00 – Submittals.

2. Manufacturer's data including materials of construction, methods of installation and related information for each item specified in PART 2 PRODUCTS.

1.04 QUALITY ASSURANCE

A. Panelboards shall be manufactured in accordance with the Standards listed under 1.02 REFERENCES.

1.05 DELIVERY, STORAGE AND HANDLING

A. Equipment shall be stored and installed in clean, dry and heated environment.

PART 2 - PRODUCTS

2.01 MANUFACTURED UNITS

A. <u>Distribution Panelboard (262416.P02).</u>

1. Shall be rated as shown on the Drawings.

2. Shall be service entrance rated.

3. Shall have a NEMA 1 enclosure, painted gray and surface mount unless shown otherwise on the Drawings. Enclosure shall not have pre-punched conduit knockouts.

4. Front cover shall be provided with a door within a door configuration with continuous hinged doors that are lockable for both the inner access and the front door providing access to the circuit breakers. The dead front shall be attached to the access door such then when opened the dead front swings open with the door.

5. Main breaker shall have an available in-rush current (AIC) rating as shown on the Drawings. Branch circuit breakers shall have the same rating unless specifically shown otherwise on the Drawings.

6. Main breaker and feeder breakers shall be molded case, electronic trip or thermal magnetic as shown on the Drawings.

7. Where electronic trip units are shown, the units shall comply with the following:

   a. Microprocessor-based tripping system shall consist of three (3) current sensors, a trip unit and a flux-transfer shunt trip. The trip unit shall use microprocessor-based technology to provide the adjustable time-current protection functions. True rms sensing circuit protection shall be achieved by analyzing the secondary current signals received from the circuit breaker current sensors, and initiating trip signals to the circuit breaker trip actuators when predetermined trip levels and time-delay settings are reached.

   b. An adjustable trip setting dial mounted on the front of the trip unit shall establish the continuous trip ratings of each circuit breaker. Rating plugs shall be adjustable and settings shall be adjusted by the CONTRACTOR as indicated on the Drawings. Rating plugs shall be interlocked so they are not interchangeable between frames, and interlocked such that a breaker cannot be closed and latched with the rating plug removed.

   c. System coordination shall be provided by the following microprocessor-based time-current curve shaping adjustments.

      1) Adjustable long-time setting (set by adjusting the trip setting dial).

      2) Adjustable short-time setting and delay with selective curve shaping.

      3) Adjustable instantaneous setting.

      4) Adjustable ground fault setting and delay (where shown on the Drawings)

   d. The microprocessor-based trip unit shall have both powered and unpowered thermal memory to provide protection against cumulative overheating should a number of overload conditions occur in quick succession.

   e. When the adjustable instantaneous setting is omitted, the trip unit shall be provided with an instantaneous override.

8. Main breaker shall have an ampere rating as shown on the Drawings.

9. Feeder breaker capacity shall be as shown on the Drawings. Provide branch circuit breakers as shown on the Drawings.

10. Bus material shall be 100% tin plate aluminum rated for the voltage and ampere rating shown on the Drawings as a minimum.

11. Grounded conductor connection means shall be isolated, copper.

12. Grounding conductor connection means shall be copper.

13. Breakers shall be bolt-on type.

14. Provide three (3) 3-pole locks for the branch circuit breakers.

15. See the Drawings for additional data.

16. All panelboards and main breaker disconnects on the project shall be of the same manufacturer.

17. Provide arc flash labels compliant with the NEC, OESC and OSHA.

18. Provide integral, factory installed TVSS, IEEE C62.41 certified, 120kA per phase surge rating or higher. Coordinate voltage to match panel. Provide Eaton type SPD, or approved equal.

19. Provide Eaton Series Pow-R-Line 3a, Square D, Siemens, or approved equal.

B. Branch Panelboards (262416.B01).

1. Shall be rated as shown on the Drawings.

2. Shall have a NEMA 1 enclosure, painted gray and surface mount unless shown otherwise on the Drawings. Enclosure shall not have pre-punched conduit knockouts.

3. Front cover shall be provided with a door within a door configuration with continuous hinged doors that are lockable for both the inner access and the front door providing access to the circuit breakers. The dead front shall be attached to the access door such then when opened the dead front swings open with the door.

4. Main breaker shall have an available in-rush current (AIC) rating as shown on the Drawings. Branch circuit breakers shall have the same rating unless specifically shown otherwise on the Drawings.

5. Main breaker shall have an ampere rating as shown on the Drawings.

6. Branch circuit breaker capacity shall be as shown on the Drawings. Provide branch circuit breakers as shown on the Drawings.

7. Bus material shall be 100% tin plate aluminum rated for the voltage and ampere rating shown on the Drawings as a minimum.

8. Grounded conductor connection means shall be isolated, copper.

9. Grounding conductor connection means shall be copper.

10. Breakers shall be bolt-on type. No half sized breakers shall be permitted.

11. Provide two (2) 2-pole and two (2) single-pole locks for the branch circuit breakers.

12. See the panel schedule in the Drawings for additional data.

13. Provide arc flash labels compliant with the NEC, OESC and OSHA.

14. Where shown on the Drawings, provide integral, factory installed TVSS, IEEE C62.41 certified, 50kA per phase surge rating or higher. Coordinate voltage to match panel. Provide Eaton type SPD, or approved equal.

15. Provide Eaton Series Pow-R-Line 1a and Pow-R-Line 2a, Siemens, Square D, or approved equal.

PART 3 - EXECUTION

3.01 INSTALLATION

A. General.

1. All identification labeling shall be in compliance with Section 26 05 53 Identification For Electrical Systems
2. Panels shall be grounded and bonded as shown on the Drawings and per the NEC whichever is more stringent.
3. Conductors shall be neatly grouped and routed within the enclosures.
4. Used and spare conductors shall be clearly identified as specified in Section 26 05 19.
5. Due to the number of conduits entering the panelboards it will be imperative that the CONTRACTOR plan the layout carefully so all the conduits fit in the bottom of the panelboards. Should a gutter be necessary, it shall be no deeper than the panelboards and only as wide as necessary to accommodate the conduits.
6. Provide typed circuit directory for each panelboard.
7. Install nameplates as shown on the Drawings and specified in Section 26 05 00.

END OF SECTION

(THIS PAGE LEFT BLANK INTENTIONALLY)

SECTION 26 24 19

MOTOR CONTROL CENTERS

PART 1 - GENERAL

1.01 SUMMARY

A. Section Includes

1. This section includes requirements for Low voltage (600 VAC or less) Motor Control Centers (MCC).

B. The Motor Control Centers listed on this project are OWNER Furnished, CONTRACTOR installed. CONTRACTOR shall coordinate with the OWNER and the OWNER's System Integrator to install the MCCs at the locations identified on the Drawings.

1.02 REFERENCES

A. The following is a list of Standards that may be referenced in the Section.

1. NEMA Standard ICS-2 Industrial Control and System Controllers, Contactors, and Overload Relays Rated 600 Volts.

2. NEMA ICS 3.1 - Safety standards for Construction and Guide for Selection, Installation and Operation of Adjustable Speed Drive Systems.

3. NEMA 250 - Enclosures for Electrical Equipment.

4. Underwriters Laboratories (UL) Standard No. UL-508C Power Conversion Equipment.

5. Underwriters Laboratories (UL) Standard No. UL-845 Motor Control Centers.

6. American National Standards Institute ANSI C19.3 Compressors for Process Industries.

7. National Electric Code (NEC).

8. IEEE 519 - IEEE Recommended Practices and Requirements for Harmonic Control in Electrical Power Systems.

B. Where reference is made to one of the above standards, the revision in effect at the time of bid opening shall apply.

1.03 DELIVERY, STORAGE, AND HANDLING

A. Equipment Handling

1. Equipment shall be handled and stored in accordance with manufacturer's instructions. One (1) copy of these instructions shall be included with the equipment at time of shipment.

1.04 COMMISSIONING

A. Provide commissioning in accordance with Section 26 08 00.

PART 2 - PRODUCTS

2.01 THE MOTOR CONTROL CENTERS

A. The Motor Control Centers listed on this project are OWNER Furnished, CONTRACTOR installed. CONTRACTOR shall coordinate with the OWNER and the OWNER's System Integrator to install the MCCs at the locations identified on the Drawings

2.02 SEISMIC BRACING

A. Provide seismic bracing for the Motor Control Centers required by the International Building Code and Oregon Structural Specialty Code.

B. The design of the seismic anchoring and bracing system shall be by a licensed Structural Engineer in the State of Oregon. The CONTRACTOR shall arrange and pay for the services of the licensed Engineer.

C. Wet stamped and signed calculations and drawing of the seismic anchoring and bracing system shall be submitted to the Engineer for review and approval

D. Include Manufacturer's seismic certificate.

PART 3 - EXECUTION

3.01 INSTALLATION

A. All identification labeling shall be in compliance with Section 26 05 53 Identification for Electrical Systems.

B. Motor control center floor sills shall be bolted directly to a concrete equipment pad as identified on the Structural Drawings.

C. Field installed interior wiring shall be neatly grouped by circuit and bound by plastic tie wraps. Circuit groups shall be supported so that circuit terminations are not stressed.

D. In general, all conduits entering or leaving a motor control center or switchboard shall be stubbed into the bottom or top horizontal wireway directly below or above the vertical section in which the conductors are to be terminated.

E. Housekeeping pads shall be included for the motor control centers or switchboards as detailed in the Contract Documents.

F. Install the equipment in accordance with the manufacturer's instructions. TVSS installation shall be integrated into the MCC lineup with leads close coupled to busses to limit transient voltages as recommended by the manufacturer.

G. Remove temporary lifting angles, lugs and shipping braces. Touch-up damaged paint finishes.

H. Make wiring interconnections between shipping splits.

I. Install bus splice plates and torque connections.

J. Seal all seams, cracks, or openings.

K. Verify that the building environment can be maintained within the service conditions required by the manufacturer of the VFD.

L. Install VFDs as indicated on the Drawings, in accordance with NECA "Standard of Installation."

M. Install VFDs plumb and level at the height indicated on the Drawings.

N. Install fuses where required.

3.02 FIELD QUALITY CONTROL

A. The CONTRACTOR shall have complete responsibility for field quality control. This includes the following responsibilities:

1. Coordinate MCC installation and testing with other equipment installation and testing per Section 26 01 08.

2. Ensure protection of the equipment from damage during construction. This includes the provision of adequate on site storage facilities prior to installation.

3. Ensure that the area of installation is fully prepared according to the Contract Documents prior to the commencement of the MCC installation.

4. Provide complete and accurate as-built schematic drawings.

B. Site Tests, Inspection

1. In accordance with Section 26 01 08.

3.03 CLEANING

A. After testing is complete, the CONTRACTOR shall inspect and clean the MCC equipment and remove any material introduced during the testing and/ or left from the initial installation. Remove all rubbish and debris from inside and around the control center. Remove dirt, dust, or concrete spatter from the interior and exterior of the equipment using brushes, vacuum cleaner, or clean, lint-free rags. Do not use compressed air.

END OF SECTION

(THIS PAGE LEFT BLANK INTENTIONALLY)

SECTION 26 27 26

WIRING DEVICES

PART 1 - GENERAL

1.01 SUMMARY

A. Section Includes.

1. This Section includes the requirements for wiring devices such as receptacles, toggle switches and devices plates.

1.02 REFERENCES

A. The following is a list of Standards which may be references in the Section.

1. National Electrical Contractors Association (NECA): National Electrical Installation Standards (NEIS).

2. National Electrical Manufacturers Association (NEMA).

a. WD1 – General Requirements for Wiring Devices.

b. WD6 – Wiring Device Dimensional Requirements.

3. National Fire Protection Association (NFPA): 70.

4. Underwriters Laboratories, Inc. (UL): 1070.

1.03 SUBMITTALS

A. Contractor shall submit all the product data in Division 26 at the same time. Piecemeal submittals will be rejected as incomplete.

B. Submittal Format:

1. The product data shall be provided as individual PDFs for each Section, unless otherwise noted for specific items. Each PDF shall be numbered to match the specification Section numbers. Submittals not itemized and labeled as specified will be rejected as incomplete.

2. A submittal is required for each product specified. Each individual product submittal shall have the corresponding Reference Keynote Number (example - 260000.A01) typewritten in the upper right hand corner of the submittal. The submittals within each Section tab shall be in the same sequential order as they are listed in the specification Section. Submittals not containing the Reference Keynote Number will be rejected as incomplete.

3. No typical submittals will be accepted. Each submittal shall be project specific and clearly identify specifically which components or parts are being submitted for approval. Any product submittals, such as a catalog sheet, which do not clearly identify which components or parts are being submitted for approval, will be rejected as incomplete.

4. Submittals in PDF shall include an index, table of contents, or bookmarks with hyperlinks to the associated page of all submitted items. Index shall include each

product specified with their corresponding Reference Keynote Number. Electronic submittals not containing a linked index, table of contents, or bookmarks will be rejected as incomplete.

C. Refer to Section 26 05 00 – Common Work Results for Electrical Submittals for additional requirements.

D. Product Data

1. Pursuant to Section 01 33 00 – Submittals.

2. Manufacturer's data including materials of construction, methods of installation and related information for each item specified in PART 2 PRODUCTS.

PART 2 - PRODUCTS

2.01 MATERIALS

A. General Purpose Receptacles (262726.R01).

1. Shall be heavy duty specification grade, two-pole, three wire grounding type with screw type terminals suitable for number 10 American Wire Gauge (AWG).

2. Shall be NEMA 5-20R, rated for 20 amperes, 125 volt configuration.

3. Provide duplex or single receptacles as shown on the Drawings.

4. Shall be gray in color unless fed from an emergency circuit and in that case the receptacle shall be red in color.

5. Provide Hubbell BR20 Commercial Specification Grade receptacles, or approved equal.

B. Ground Fault Circuit Interrupter Receptacles (262726.R10).

1. Shall be heavy duty hospital grade, two-pole, three wire grounding type with screw type terminals suitable for number 10 American Wire Gauge (AWG).

2. Shall be NEMA 5-20R, rated for 20 amperes, 125 volt configuration.

3. Provide duplex or single receptacles as shown on the Drawings.

4. Shall be gray in color unless fed from an emergency circuit and in that case the receptacle shall be red in color.

5. Provide Hubbell GFR8300SGGY, Hubbell GFR8300SGR for gray receptacles, or approved equal. Red receptacles shall be sample model number except for color designation.

C. General Purpose Toggle Switches (262726.S01).

1. Shall be heavy duty specification grade with grounding screw, 20 amperes, 120-277 volt rated with screw type terminals suitable for number 10 American Wire Gauge (AWG).

2. Single or double throw, single pole, three-way or four-way as shown on the Drawings.

3. Shall be gray in color.

4. Provide Hubbell CSB120 Specification Grade Commercial Series, or approved equal.

D. Wall Mount, Line Voltage, Cooling Thermostat (262726.T10).

1. Provide a wall mounted, line voltage, cooling thermostat as shown on the Drawings.

2. Shall be single pole, rated for 120 volt and the load served with a range of 50 – 90 degrees F.

E. Stainless Steel Device Plates (262726.P01).

1. Install stainless steel device plates at all indoor locations unless called out otherwise on the drawings.

2. Provide Hubbell smooth metal 302/304 super stainless steel, or approved equal.

F. Weatherproof Receptacle Device Plates (262726.P11).

1. Weatherproof receptacle device plates shall be provided as shown on the drawings and in all locations that may be subjected to damp or wet conditions.

2. Weatherproof receptacle device plates shall be in-use type weatherproof receptacle device plates that allow for weatherproof protection even when a cord is plugged into the device.

3. Weatherproof receptacle device plates shall be metallic.

4. Weatherproof receptacle device plates shall be gasketed.

5. Weatherproof receptacle device plates shall be lockable.

6. Weatherproof receptacle device plates shall be UL Listed.

7. The device plate shall be PVC-coated and of a similar design when installed on PVC-coated boxes.

8. Provide Red Dot model CKMUV, or approved equal.

G. Weatherproof Switch Device Plates (262726.P20).

1. Provide a die cast vertical oriented weatherproof switch device plate that allow for an up/down action on a standard toggle switch installation.

2. The device plate shall allow for switching without lifting a device cover.

3. The device plate shall be PVC-coated and of a similar design when installed on PVC-coated boxes.

4. Provide Red Dot CCT type device plates, or approved equal.

H. Device Plate Identification Label (262726.D01).

1. Label all device plates with a vinyl, super adhesive label rated for outdoor use and that is white, 0.375 inches high with 0.25 inch black characters.

2. Provide Brothers product, or approved equal.

PART 3 - EXECUTION

3.01 INSTALLATION

A. General.

1. All identification labeling shall be in compliance with Section 26 05 53 Identification For Electrical Systems

2. Devices shall be bonded to their enclosure and the equipment grounding conductor with a separate grounding conductor attached to the device which will allow the device to be detached from the enclosure without disconnecting the equipment grounding conductor from the enclosure.

3. The use of the mounting yoke as the only method for bonding is unacceptable.

4. Devices that are not installed at the end of the line (circuit) shall be pig-tailed out and the pig-tails shall be connected to the line and load conductors.

5. After the pigtailed conductors are terminated on the device and before it is installed in the enclosure the exposed energized parts shall be wrapped with electrical insulating tape with a minimum of three wraps.

6. As the device is installed in the enclosure, care shall be taken to neatly fold the conductors inside the enclosure so as to not kink, bind or otherwise damage the sheath of the conductors.

7. Terminations on all devices shall be via pressure or compression type connectors. Wrapping conductors around a termination screw and tightening is unacceptable.

8. Mounting heights for receptacles shall be 18 inches to center from finished floor unless called out otherwise on the Drawings or specified at different height to meet minimum code requirements. Where countertops are present, receptacles shall be mounted horizontally and mounted 4 inches to center above the back-splash. The CONTRACTOR is responsible to coordinate with the approved casework submittals. Failure to do so will require the CONTRACTOR to relocate devices at their expense.

9. Mounting height for switches shall be 46 inches to center above finished grade unless called out otherwise on the Drawings or specified at different height to meet minimum code requirements. Where countertops are present, switches shall be mounted 5 inches to center above the back-splash. The CONTRACTOR is responsible to coordinate with the approved casework submittals. Failure to do so will require the CONTRACTOR to relocate devices at their expense.

10. Coordination is the responsibility of the CONTRACTOR. If a conflict exists for the mounting location of devices, the CONTRACTOR shall bring it to the ENGINEER's attention during the rough-in phase and the ENGINEER shall provide direction. Failure to coordinate conflicts during the rough-in phase will result in relocation of devices at the CONTRACTOR's expense.

11. All receptacles fed from emergency panels shall be red in color.

12. Devices shall be installed level and plumb. Devices shall be brought out plumb with the wall surface via UL listed spacers approved for this purpose if necessary.

13. Devices shall be tested for voltage, polarity, ground integrity and in the case of GFCI receptacles, that they operate as intended.

14. The position of devices, as shown on the Drawings, are general locations only unless dimensioned. The CONTRACTOR is responsible to coordinate with various trades to ensure no conflict exists.

END OF SECTION

(THIS PAGE LEFT BLANK INTENTIONALLY)

SECTION 26 28 16

ENCLOSED SWITCHES AND CIRCUIT BREAKERS

PART 1 - GENERAL

1.01 SUMMARY

A. Section includes the following enclosed low voltage components rated at 600 VAC or less:

1. Heavy duty single throw, fused, safety switch.
2. Manual Transfer Switch (MTS).

1.02 REFERENCES

A. National Fire and Protection Association (NFPA)

1. 70 - National Electrical Code (NEC)

B. National Electrical Manufacturers Association (NEMA).

1. B 3-2001 - Molded Case Circuit Breakers and Their Application.
2. AB 4-2001 - Guidelines for Inspection and Preventive Maintenance of Molded Case Circuit Breakers Used in Commercial and Industrial Applications.
3. KS 1-2001 - Enclosed and Miscellaneous distribution Equipment Switches (600 Volts Maximum).

1.03 SUBMITTALS

A. Contractor shall submit all the product data in Division 26 at the same time. Piecemeal submittals will be rejected as incomplete.

B. Submittal Format:

1. The product data shall be provided as individual PDFs for each Section, unless otherwise noted for specific items. Each PDF shall be numbered to match the specification Section numbers. Submittals not itemized and labeled as specified will be rejected as incomplete.
2. A submittal is required for each product specified. Each individual product submittal shall have the corresponding Reference Keynote Number (example - 16000.A01) typewritten in the upper right hand corner of the submittal. The submittals within each Section tab shall be in the same sequential order as they are listed in the specification Section. Submittals not containing the Reference Keynote Number will be rejected as incomplete.
3. No typical submittals will be accepted. Each submittal shall be project specific and clearly identify specifically which components or parts are being submitted for approval. Any product submittals, such as a catalog sheet, which do not clearly identify which components or parts are being submitted for approval, will be rejected as incomplete.
4. Submittals in PDF shall include an index, table of contents, or bookmarks with hyperlinks to the associated page of all submitted items. Index shall include each

product specified with their corresponding Reference Keynote Number. Electronic submittals not containing a linked index, table of contents, or bookmarks will be rejected as incomplete.

C. Refer to Section 26 05 00 – Common Work Results for Electrical Submittals for additional requirements.

D. Product Data

1. Pursuant to Section 01 33 00 – Submittals.

2. Manufacturer's data including materials of construction, methods of installation and related information for each item specified in PART 2 PRODUCTS.

E. Shop Drawings

1. Back panel and enclosure layouts including interior and exterior front and side exterior view details showing maximum overall dimensions.

2. For enclosure weighing 150 pounds and over, provide physical properties, handling and mounting data including total weight, lifting instructions, height, and floor space required. Mounting requirements for seismic zone 4.

3. All drawings shall list the equipment number.

4. Component designations, shall match those shown on the Drawings.

F. Quality Assurance/Control Submittals

1. Manufacturer's Instructions

a. List special requirements or restrictions of the motor/load combination.

b. Submit copy of the manufacturer's operating and maintenance manuals and, installation instructions.

1.04 QUALITY ASSURANCE

A. Regulatory Requirements

1. Products shall be UL listed.

1.05 DELIVERY, STORAGE, AND HANDLING

A. Storage and Protection

1. Products shall be stored and installed in a dry environment maintained at 65 degrees F or above.

PART 2 - PRODUCTS

2.01 MANUFACTURED UNITS

A. <u>Heavy Duty Fused Safety Switch (262816.S01)</u>.

1. Heavy duty fused safety switches shall be provided as shown on the Drawings.

2. Heavy duty fused safety switches shall be rated for the load served and shall switch all the phase conductors.

3. Heavy duty fused safety switches shall include separate, unswitched, neutral and ground buses where applicable.

4. Heavy duty fused safety switches shall be fused type and provided with appropriate fuses for the application and AIC rating.

5. Heavy duty fused safety switch enclosures shall be painted steel, NEMA 3R, surface mount for outdoor installations and NEMA 12 surface mount for indoor installations.

6. Heavy duty fused safety switch ground bus shall be large enough to accommodate terminations for all grounding conductors.

7. Switch shall accept Type H or Type L fuses.

8. Provide fuses with rating as indicated on the Drawings for all safety switches.

9. Provide Eaton, or approved equal.

B. Heavy Duty Non-Fused Safety Switch (262816.S05).

1. Heavy duty safety switches shall be provided as shown on the Drawings.

2. Heavy duty safety switches shall be rated for the load served and shall switch all the phase conductors.

3. Heavy duty safety switches shall include separate, unswitched, neutral and ground buses where applicable.

4. Heavy duty safety switch enclosures shall 316 Stainless Steel, NEMA 4X, surface mount for outdoor installations and NEMA 12 surface mount for indoor installations.

5. Heavy duty safety switch ground bus shall be large enough to accommodate terminations for all grounding conductors.

6. Provide Eaton, or approved equal.

C. Enclosed Circuit Breaker (262816.B01).

1. Enclosed circuit breakers shall be provided as shown on the Drawings.

2. Enclosed circuit breakers shall be rated as shown on the Drawings.

3. Enclosed circuit breakers shall be UL listed as “Suitable for use as Service Entrance Equipment”, where required.

4. Enclosed circuit breaker enclosures shall be 316 Stainless Steel, NEMA 4X, outdoor, surface mount for outdoor installations and NEMA 12 surface mount for indoor installations.

5. Enclosed circuit breakers breaker shall be molded case thermal magnetic.

6. Enclosed circuit breakers breaker terminals shall be rated for use with 75° C. wire.

7. Enclosed circuit breakers breaker handle shall be capable of being locked out in the OFF position.

8. Enclosed circuit breakers breaker shall indicate on/ tripped/ off status according to the position of the operating handle.

9. Enclosed circuit breakers grounded conductor connection shall be copper.

10. Provide Eaton Cutler Hammer, or approved equal.

D. Manual Transfer Switch (262816.M01).

1. General. The non-automatic transfer switch shall transfer from the normal service to an alternate service. The transfer shall not take place automatically but shall be initiated manually by operating personnel. Transfer back to the normal power supply shall also be initiated manually. The switch shall be UL listed and shall bear the UL label.

2. Construction.

a. The non-automatic transfer switch shall be of the mechanically held double throw type and connected to the transfer mechanism by a simple over-center linkage. All main power contacts and auxiliary contacts shall be mechanically attached to a common shaft, shall be double-break silver alloy with wiping action, and shall be protected by arcing contacts. Arcing contacts shall close before and open after the main contacts and shall be readily replaceable. Contact design and arrangement shall permit repeated making and breaking of full-load current, in a combination of motor and other loads, without damage to the main contacts. Provide a main transfer mechanism utilizing rugged metal parts throughout. Molded circuit breaker type designs are not acceptable.

b. The enclosure shall be NEMA 12 construction with hinged doors on the front for access to the interior controls. Secure doors by a locking type latch. Provide two keys for the lock.

c. Cable connections shall be accessible from the front without removing internal components.

d. Safety Requirements.

1) Arrange the electrical supply to each control panel to be disconnected by a single switch or circuit breaker, except for necessary foreign circuits. Cover any live parts within the control panel fed from foreign control or signal circuits or arrange for them to be disconnected by one of the following methods:

2) Door-operated enclosed disconnect switches; or

3) Clearly identified enclosed manually operated disconnect switches, which may be located inside the control panel door, provided the operating handles are isolated or barriered from all open live parts.

4) Arrange the controls so that manipulation of control switches, adjustments to timing relays, or replacement of fuses can be done without exposure to live parts.

e. The transfer switch shall have the following features:

1) Continuous rating with full neutral bus. Current rating shall be as shown on the Drawings.

2) Adequate line and load lugs for terminating the power conductors shown on the Drawings.

3) A terminal strip with terminals for terminating all external control circuits. Number all terminals using the wire number for the wire terminated.

4) Cable wiring with cable ties, secured in place and guarded where subject to mechanical injury.

5) Permanent identification of each wire at each point of connection using numbered wiring sleeves. Provide electrically common wires with the same number. Uniquely number electrically different wires.

3. UL Label. The transfer switch shall have a UL label on the unit when it arrives at the site. Absence of the UL label shall be sufficient cause for the unit to be rejected. Provide all the specified features, options, and accessories. If the manufacturer's standard UL unit does not have the specified features, options, or accessories, then provide alternative features, options, or accessories to accomplish the same purpose in a manner similar to that specified, while still providing a unit with a UL label.

4. Current Ratings. The transfer switch shall have continuous ampere rating as shown on the Drawings and a short circuit withstand rating for 3 cycles at 480 volts.

5. Finish. Shall be manufacturer's standard not less than 3 mils thick. Color shall be light gray ANSI 61 per Z55.1.

6. Factory Tests. Assemble, wire and test the automatic transfer switch at the factory. Conduct tests to assure that every component functions properly. Submit prototype test reports on bus bracing for the Engineer's review.

PART 3 - EXECUTION

3.01 INSTALLATION

A. All identification labeling shall be in compliance with Section 26 05 53 Identification For Electrical Systems.

B. Install switches and circuit breakers as indicated on the Drawings.

C. Install equipment level and plumb.

D. Provide nameplates as indicated on the Drawings.

1. Manual transfer switch positions shall be clearly labeled Normal Power, Off & Emergency Power respectively.

3.02 ADJUSTING

A. Adjustable features such as the trip setting for a circuit breaker shall be adjusted pursuant to the manufacturer’s instructions.

END OF SECTION

(THIS PAGE LEFT BLANK INTENTIONALLY)

SECTION 26 32 00

PACKAGED DIESEL GENERATOR ASSEMBLIES

PART 1 - GENERAL

1.01 SUMMARY

A. Section Includes.

1. Requirements for a complete factory assembled generator set with digital electronic generator controls, and digital voltage regulator.
2. The generator and transfer switch shall be of the same manufacturer.
3. Requirements for an outdoor weather-protective enclosure.
4. Requirements for a sub-base fuel tank.

1.02 REFERENCES

A. The following is a list of Codes and Standards that the packaged diesel generator shall conform to. The generator set shall include necessary features to meet the requirements of these standards.

1. IEEE 446 – Recommended Practice for Emergency and Standby Power Systems for Commercial and Industrial Applications.
2. NFPA 70 – National Electrical Code
3. NFPA 99 – Essential Electrical Systems for Health Care Facilities, if applicable to this project.
4. NFPA 110 – Emergency and Standby Power Systems, if applicable to this project.
5. NEMA MG1. Alternator shall comply with the requirements of the current edition of this Standard as they apply to AC alternators.
6. UL 142 – Sub-base Tanks.
7. UL 1236 – Battery Chargers.
8. UL 2200 – The generator set shall be list to UL2200.

B. The generator control system shall comply with the following Codes and Standards.

1. EN 50082-2, Electromagnetic Compatibility, Generic Immunity Requirements, Part 2.
2. EN 55011, Limits and Methods of Measurement of Radio Interference Characteristics.
3. FCC Part 15, Subpart B.
4. IEC 8528 Part 4. Control Systems for Generator Sets.
5. IEC Std. 801.2, 801.3 and 801.5 for susceptibility, conducted and radiated electromagnetic emissions.

6. UL 508. The entire control system of the generator set shall be UL 508 listed and labeled.

C. The generator set manufacturer shall be certified to ISO 9001 International Quality Standard and shall have third party certification verifying assurance in design/development, production, installation and service in accordance with ISO 9001.

1.03 SUBMITTALS

A. Contractor shall submit all the product data in Division 26 at the same time. Piecemeal submittals will be rejected as incomplete.

B. Submittal Format:

1. The product data shall be provided as individual PDFs for each Section, unless otherwise noted for specific items. Each PDF shall be numbered to match the specification Section numbers. Submittals not itemized and labeled as specified will be rejected as incomplete.

2. A submittal is required for each product specified. Each individual product submittal shall have the corresponding Reference Keynote Number (example - 16000.A01) typewritten in the upper right hand corner of the submittal. The submittals within each Section tab shall be in the same sequential order as they are listed in the specification Section. Submittals not containing the Reference Keynote Number will be rejected as incomplete.

3. No typical submittals will be accepted. Each submittal shall be project specific and clearly identify specifically which components or parts are being submitted for approval. Any product submittals, such as a catalog sheet, which do not clearly identify which components or parts are being submitted for approval, will be rejected as incomplete.

4. Submittals in PDF shall include an index, table of contents, or bookmarks with hyperlinks to the associated page of all submitted items. Index shall include each product specified with their corresponding Reference Keynote Number. Electronic submittals not containing a linked index, table of contents, or bookmarks will be rejected as incomplete.

C. Refer to Section 26 05 00 – Common Work Results for Electrical Submittals for additional requirements.

D. Product Data

1. Pursuant to Section 01 33 00 – Submittals.

2. Manufacturer’s data including materials of construction, methods of installation and related information for each item specified in PART 2 PRODUCTS.

3. Provide a complete bill of materials. Any differences between products specified and proposed shall be clearly identified.

4. Manufacturer’s product literature, model specifications and performance data sufficient to verify compliance with items specified in 1.02 References of this Section.

5. Complete model number and trip characteristics for the main circuit breaker to be provided.

6. Warranty information complying with the requirements of this Section.

7. Seismic certification for area installed provided by the manufacturer.

8. Seismic calculations for the concrete slab and anchor bolts required. Calculations shall be wet stamped by a Professional Engineer licensed in the State of Oregon.

9. Project specific power and control schematic. The schematic shall clearly identify all field wiring termination points using the same identification shown in the Contract Documents.

10. The generator, fuel tank and battery charger shall, at a minimum have the following I/O points identified on the schematic.

    a. Generator H-O-A in hand.

    b. Generator H-O-A in auto.

    c. Generator running.

    d. Generator warning.

    e. Generator failed.

    f. Generator low fuel.

    g. Battery charger failed.

11. Submittal shall include a line by line compliance statement based on this specification.

12. Manufacturer's document of EPA certification for proposed model generator.

13. Outline drawing showing overall dimensions of generator, tank, enclosure and accessories.

1.04 QUALITY ASSURANCE

A. Qualifications.

1. The manufacturer of this equipment shall have produced similar equipment for a minimum period of ten years. When requested by the ENGINEER, an acceptable list of installations with similar equipment shall be provided demonstrating compliance with this requirement.

2. The generator shall be of the same manufacturer as the transfer switch to provide a single source of warranty responsibility for all the products provided.

3. Generator set manufacturer shall be certified to ISO 9001 International Quality Standard and shall have third party certification verifying quality assurance in design/development, production, installation and service in accordance with ISO 9001.

B. Factory Testing.

1. The generator set manufacturer shall perform a complete operational test on the generator set prior to shipping from the factory. A certified test report shall be shipped with the generator set.

2. Generator set factory tests on the equipment shall be performed at rated load and rated power factor. Generator sets that have not been factory tested at rated power factor will not be acceptable. Tests shall include; run at full load, maximum power, voltage regulation, transient and steady-state governing, single step load pickup and function of safety shutdowns.

3. Factory testing may be witnessed by the OWNER and/or ENGINEER. Costs for travel expenses will be the responsibility of the OWNER and/or ENGINEER. Manufacturer is responsible to provide a minimum of two weeks notice for factory testing.

1.05 WARRANTY

A. Generator set, fuels tank, enclosure and accessories specified within this Section shall be warranted for a minimum period of 5 years from the date of substantial completion against all defects in materials and workmanship. The warranty shall be comprehensive including all parts, labor and travel.

1.06 SELECTIVE COORDINATION

A. The manufacturer of the generator and overcurrent protection device has been designed to comply with the Selective Coordination requirements of the current edition Oregon Specialty Code. Alternate manufacturers shall be considered only under the following conditions:

1. The Contractor shall provide a design of the entire NEC article 701 Legally Required Standby System distribution system to demonstrate compliance with the Selective Coordination Requirements of the current edition of the Oregon Electrical Specialty Code.

2. The Contractor shall provide scaled floorplans demonstrating that the size of the alternate electrical equipment does not exceed the space requirements of the basis of design.

3. The Contractor shall provide a written document stating that the alternate design complies with the Selective Coordination requirements of the current edition of the Oregon Specialty Code. The document shall be signed and stamped by a licensed Professional Electrical Engineer or Supervising Electrician in the State of Oregon.

4. Acceptance of the alternative shall require written approval by the Engineer.

PART 2 - PRODUCTS

2.01 <u>GENERATOR SET (263200.G01)</u>.

A. Manufacturer

1. Basis of design shall be Cummins or approved equal.

B. Ratings.

1. The generator set shall operate at a voltage as shown on the Drawings.

2. The generator set shall be rated as shown on the Drawings. Standby rating, based on site conditions of an altitude of 500 feet above sea level and ambient temperatures up to 104 degrees F.

C. Performance.

1. Voltage regulation shall be plus or minus 0.5 % for any constant load between no load and rated load. Random voltage variation with any steady load from no load to full load shall not exceed plus or minus 0.5 %.

2. Frequency regulation shall be isochronous from steady state no load to steady state rated load. Random frequency variation with steady state no load to steady state rated load shall not exceed plus or minus 0.5%.

3. The diesel engine generator set shall accept a single step load of 100 % nameplate kW and power factor, less applicable de-rating factors, with the engine generator set at operating temperature.

4. The generator set shall be capable of recovering to a minimum of 90 % of rated no load voltage following the application of the specified kVA load at near zero power factor applied to the generator set. Maximum voltage dip on application of this load, considering both alternator performance and engine speed changes shall not exceed 25 %.

5. The alternator shall produce a clean AC voltage waveform, with no more than 5 % total harmonic distortion at full linear load when measured from line to neutral, and no more than 3 % in any single harmonic and no third order harmonics or their multiples. Telephone influence factor shall be less than 40.

6. The generator set shall be certified by the engine manufacturer to be suitable for use at the installed location and rating and shall meet all applicable exhaust emission requirements at the time of commissioning.

D. Construction.

1. The engine generator set shall be mounted on a heavy duty steel base to maintain alignment between components. Provide vibration isolators between the engine generator assembly and the structural base. The base shall incorporate a battery tray with hold down clamps within the rails.

2.02 ENGINE AND ENGINE EQUIPMENT

A. The engine shall be diesel, 4 cycle, radiator and liquid cooled, producing 1.5 HP per kW to operate at 1800 rpm for full electrical output rating. The horsepower rating of the engine at its minimum tolerance level shall be sufficient to drive the alternator and all connected accessories.

B. An electronic governor system shall provide automatic isochronous frequency regulation. The governing system dynamic capabilities shall be controlled as a function of the engine coolant temperature to provide fast stable operation at varying engine operating temperature conditions. The control system shall actively control the fuel rate and excitation as appropriate to the state of the generator set. Fuel rate shall be regulated as a function of starting, accelerating to start disconnect speed and accelerating to rated speed.

C. Skid mounted radiator and cooling system rated for the full load operation in 122 degrees F ambient as measured at the alternator air inlet. Radiator shall be prototype tested to verify cooling performance of the engine, radiator and fan operation in a controlled environment. Radiator shall be provided with a duct adapter flange if generator is to be installed indoors. The equipment manufacturer shall fill the cooling system with a 50/50 ethylene glycol / water mixture prior to shipping. Rotating parts shall be guarded against accidental contact.

D. Electric starter(s) capable of three complete cranking cycles without overheating.

E. Provide with full flow lubrication oil filters with replaceable spin on canister elements.

F. An engine driven, mechanical, positive displacement fuel pump. Provide fuel filter with replaceable spin on canister element. Fuel cooler if required for operation due to the design of the engine and the installation.

G. Provide replaceable dry element air cleaner with restriction indicator.

H. Engine battery charging alternator, 40 ampere minimum and solid state voltage regulator.

I. Flexible supply and return fuel lines.

2.03 AC ALTERNATOR

A. The AC generator shall be; synchronous, four pole, 2/3 pitch, revolving field, drip proof construction, single pre-lubricated sealed bearing, air cooled by a direct drive centrifugal blower fan and directly connected to the engine with flexible drive disc. All insulation system components shall meet NEMA MG1 temperature limits for Class H insulation system and shall be UL 1446 listed. Actual temperature rise measured by resistance method at full load shall not exceed 105 degrees C.

B. A permanent magnet generator (PMG) shall be included to provide a reliable source of excitation power for optimum motor starting and short circuit performance. The PMG and controls shall be capable of providing sufficient excitation for the alternator to supply approximately 300 % of rated current for up to 10 seconds.

2.04 GENERATOR SET CONTROL

A. The generator set shall be provided with a microprocessor based control system that is designed to provide automatic starting, monitoring, protection and control functions for the generator set. The control system shall also be designed to allow local monitoring and control of the generator set and remote monitoring and control as described in the specification.

B. The control shall be mounted on the generator set. The control shall be vibration isolated and prototype tested to verify the durability of all the components in the system under the vibration conditions encountered. All switches, lamps and meters in the control system shall be oil-tight and dust-tight. All active control components shall be installed within a UL/NEMA 3R enclosure. There shall be no exposed points in the control, with the door open, that operate in excess of 50 volts.

C. The generator control enclosure which contains all operator interface switches, lamps, emergency stop switch and accessories listed below, shall be mounted no more that seventy-five (75) inches to the top, above finished floor after the generator set has been

installed on a belly tank, isolation springs or other devices specified herein and/or shown on the Drawings.

D. The generator set controller shall be capable of communicating via Ethernet/IP. The following alarms shall be monitored via Ethernet/IP by the SCADA System:

1. Generator H-O-A in hand.
2. Generator H-O-A in auto.
3. Generator running.
4. Generator warning.
5. Generator failed.
6. Generator low fuel.
7. Battery charger failed.

E. Requirements for control switches are listed below.

1. Mode select switch. The mode select switch shall initiate the following control modes. When in the run or manual position the generator set shall start and accelerate to rated speed and voltage as directed by the operator. A separate pushbutton to initiate starting is acceptable. In the off position the generator set shall immediately stop bypassing all time delays. In the auto position the generator set shall be ready to accept a signal from a remote device to start and accelerate to rated speed and voltage.
2. Emergency stop switch. Switch shall be red mushroom-head pushbutton. Depressing the emergency stop switch shall cause the generator set to immediately shut down and be locked out from automatic restarting.
3. Reset switch. The reset switch shall be used to clear a fault and allow restarting the generator set after it has shut down for any fault condition.
4. Panel lamp switch. Depressing the panel lamp switch shall cause the entire panel to be lighted with DC control power. The panel lamps shall automatically be switched off 10 minutes after the switch is depressed or after the switch is depressed a second time.
5. Voltage and frequency adjustment. The generator set control shall include digital raise / lower switches for adjustment of voltage and frequency.

F. Generator Set AC Output Metering.

1. The generator set shall be provided with a metering set including the following features and functions.
   a. Digital metering set, 1 % accuracy to indicate generator RMS voltage and current, frequency and total load on the generator set.
   b. Generator set alarm and status display.

G. Generator Set Alarm Status Display.

1. The generator set control shall include LED alarm and status indication lamps. The lamps shall be high intensity LED type. The lamp condition shall be clearly

apparent under bright room lighting conditions. At a minimum, the control shall have separate indication lamps to indicate the following.

a. Not in Auto.
b. Shutdown.
c. Warning.
d. Remote Start.
e. Auto mode.
f. Manual run.

2. The generator set control shall indicate the existence of warning and shutdown conditions on the generator set control panel for all the following conditions.

a. Low oil pressure (warning and shutdown).
b. High coolant temperature (warning and shutdown).
c. Over current (warning and shutdown).
d. Oil pressure sender failure (warning).
e. Low coolant temperature (warning).
f. Low and high battery voltage (warning).
g. Weak battery (warning).
h. Low fuel level (warning).
i. Engine temperature sender failure (warning).
j. Low coolant level (shutdown).
k. Fail to crank (shutdown).
l. Fail to start/over-crank (shutdown).
m. Over-speed (shutdown).
n. Low and high AC voltage (shutdown).
o. Over and under frequency (shutdown).
p. Field overload (shutdown).
q. Loss of sensing voltage (shutdown).
r. Emergency stop (shutdown).

3. The control system shall incorporate data logging of alarm conditions.

4. Provisions shall be made for indication of customer specified alarm conditions as identified in 1.3 Submittals in this specification, but in no case shall there be less than a minimum of four (4) customer specified alarm or shutdown conditions.

H. Engine Status Monitoring.

1. The following information shall be available from the alphanumeric display panel on the generator set control.

a. Engine oil pressure.
b. Engine coolant temperature.
c. Engine speed (rpm).
d. Number of hours of operation.

e. Number of start attempts.

f. Battery voltage.

I. Engine Control Functions.

1. The control system shall include a cycle cranking system which allows for user selected crank time, rest time and number of cycles. Initial settings shall be for three cranking periods of fifteen seconds each with fifteen second rest period between cranking periods.

2. The control system shall include the engine governor control which functions to provide steady state frequency regulation as noted elsewhere in this specification.

3. The control system shall include sender failure monitoring logic which is capable of discriminating between failed sender or wiring components and an actual failure condition.

4. The control system shall include time delay start (adjustable from 0 to 300 seconds) and time delay stop (adjustable from 0 to 600 seconds) functions.

J. Alternator Control Functions.

1. The generator set shall include a full wave rectified automatic digital voltage regulation system that is matched and prototype tested by the engine manufacturer with the governing system provided. It shall be immune from mis-operation due to load induced voltage waveform distortion and provide pulse width modulated output to the alternator exciter. The voltage regulation system shall control buildup of AC generator voltage to provide linear rise and limit overshoot. The system shall include a torque matching characteristic which shall reduce output voltage in proportion to frequency below adjustable frequency threshold. Torque matching characteristic shall be adjustable for roll off frequency and rate and be capable of being curve matched to the engine torque curve with adjustments in the field. The voltage regulator shall include adjustments for gain, damping and frequency roll off. Adjustments shall be made via digital raise/lower switches with an alphanumeric LED readout to indicate setting level.

2. A microprocessor based protection device shall be provided to monitor the output current of the generator set and initiate an alarm (over current warning) when load exceeds 110 % of the rated current of the generator set for more than sixty seconds. The device shall shutdown and lock out the generator set when output current approaches the thermal damage point of the alternator (over current shutdown). The protective functions provided shall be in compliance with the requirements of NFPA 70 (NEC) Article 445.

3. The control shall provide alternator protection from the following conditions.

a. High or low voltage.

b. Over or under frequency.

c. Over current warning or shutdown.

d. Loss of voltage sensing.

e. Field overload shutdown.

4. A microprocessor based AC over / under voltage monitoring system that responds only to true RMSD voltage conditions shall be provided. The system shall initiate shutdown of the generator set when alternator output voltage exceeds 110 % of the operator set point voltage level for more than ten seconds or with no intentional delay when voltage exceeds 130%. Under voltage shutdown shall occur when the output voltage of the alternator is less than 85 % for more than ten seconds.

2.05 OTHER EQUIPMENT TO BE PROVIDED WITH THE GENERATOR SET.

A. The generator set shall be provided with an inherent alternator protection relay. The use of a molded case generator output circuit breaker shall not be acceptable.

1. The relay shall provide overload protection of the generator and generator feeder conductors, per the NEC.

2. The relay shall provide short circuit and ground fault protection.

3. The relay trip curve shall be adjustable to achieve selective coordination.

4. The relay shall selectively coordinate per the NEC and the Oregon Electrical Specialty Code.

5. The generator shall be provided with a disconnect capable of being locked in the open position. This disconnecting means shall not consist of a circuit breaker. The disconnecting means shall comply with the NEC and the Oregon Electrical Specialty Code.

6. The alternator protection shall be Cummins Amp Sentry.

B. Outdoor Weather Protective and Sound Attenuation Enclosure.

1. The generator set shall be provided with an outdoor enclosure (housing) with the entire package listed under UL 2200. Housing shall provide ample airflow for generator set operation at rated load in an ambient temperature of 100 degrees F. The housing shall have lockable hinged access doors as required to maintain easy access for all operating and service functions. Enclosure roof shall be cambered to prevent rainwater accumulation. Openings shall be screened to limit access of rodents into the enclosure.

2. The outdoor weather protective enclosure shall be made of steel.

3. The enclosure shall be insulated with non-hydroscopic materials and reduce the sound level of the generator set while operating at full rated load to a maximum of 75 dBA as measured at seven meters from the generator set in a free field environment.

4. All sheet metal shall be primed for corrosion protection and finish painted with the manufacturer's standard color using a two step electro-coating paint process. Listed below is the minimum level of performance for the painting process.

a. Primer thickness, 0.5 – 2.0 mils. Top coat thickness, 0.8 -1.2 mils.

b. Gloss, per ASTM D523-89, 80 % plus or minus 5 %. Gloss retention after one year shall exceed 50 %.

c. Cross hatch adhesion, per ASTM D3359-93, 4B-5B.

d. Impact resistance, per ASTM D2794-93, 120-160 inch pounds.

e. Salt spray, per ASTM B1117-90, 1000+ hours.

f. Humidity, per ASTM D2247-92, 1000+ hours.

g. Water soak, per ASTM D2247-92, 1000+ hours.

5. All external enclosure hardware shall be corrosion resistant and hinges shall be stainless steel.

6. A factory mounted exhaust silencer shall be mounted inside the enclosure. The exhaust shall exit the enclosure though a rain collar and terminate with a rain cap. Exhaust connections to the generator set shall be through seamless flexible connections.

7. The enclosure shall include a flexible oil drain line that extends to the exterior of the enclosure. The enclosure shall include an external radiator fill provision.

C. The generator set shall be provided with a mounted main line circuit breaker sized to carry the rated output current of the generator set and as shown on the Drawings, whichever is greater.

D. Provide a dual wall sub-base fuel storage tank sized to allow for full load operation of the generator set for twenty-four (24) hours at full load. The tank shall be constructed of corrosion resistant steel and shall be UL listed. The equipment, as installed by the CONTRACTOR shall meet all local and regional requirements for the application. The tank shall include all the features listed below.

1. Emergency tank and basin vents, mechanical level gauge and basin drain.

2. Fuel supply and return lines connected to generator set with flexible lines as recommended by the engine manufacturer and in compliance with UL 2200 and NFPA 37 requirements.

3. Leak detection provision and high and low fuel level float switches wired to the generator set control for local and remote alarm indication.

E. Provide a fully automatic battery charger, sized as appropriate for the engine and batteries, as recommended by the engine manufacturer. The charger shall be UL labeled for use in emergency applications and shall include all features necessary to meet NFPA 110 requirements. The charger shall be provided with remote indication of battery charger fail alarm.

F. Thermostatically controlled UL 499 listed coolant heater, sized as recommended by the engine manufacturer to warm the engine to a minimum of 104 degrees F in an ambient temperature of 40 degrees F and in compliance with NFPA 110. Voltage shall be as identified in the Drawings. Coolant heater shall have provisions to isolate the heater for replacement of the heater element without draining the coolant from the generator set.

G. Provide engine starting batteries. Starting batteries shall be lead-acid, 12 volt DC, sized as recommended by the engine manufacturer, complete with battery cables and connectors. The batteries shall be capable of three complete fifteen second cranking cycles at 40 degrees F ambient temperature when fully charged.

H. Provide a thermostatically controlled anti-condensation winding heater on the alternator, sized as recommended by the engine manufacturer. The heater shall be provided with a cord and plug end and a minimum of six feet in length which can be plugged into a receptacle provided by the CONTRACTOR.

2.06 SEISMIC BRACING

A. Provide seismic bracing for the generator set required by the International Building Code and Oregon Structural Specialty Code.

B. The design of the seismic anchoring and bracing system shall be by a licensed Structural Engineer in the State of Oregon. The CONTRACTOR shall arrange and pay for the services of the licensed Engineer.

C. Wet stamped and signed calculations and drawing of the seismic anchoring and bracing system shall be submitted to the Engineer for review and approval

D. Include Manufacturer's seismic certificate.

PART 3 - EXECUTION

3.01 INSTALLATION

A. General.

1. All identification labeling shall be in compliance with Section 26 05 53 Identification For Electrical Systems.

2. Equipment shall be installed by the CONTRACTOR in accordance with the final approved submittals, manufacturer’s instructions and Contract Documents.

3. Installation of equipment shall include furnishing and installing all interconnecting conduits and wiring between all equipment provided for the on-site power system.

4. Equipment shall be installed be permanently fastened to the concrete pad in accordance with the manufacturer’s instructions which are specified to meet the seismic requirements for the environment and location installed.

B. Field Quality Control.

1. The local authority having jurisdiction shall approve the installation of the generator set and transfer switch before they are energized.

C. Start-up and Testing

1. An authorized employee of the manufacturer’s service division shall perform the start-up and testing services.

2. The CONTRACTOR shall notify the ENGINEER a minimum of two weeks in advance of the start-up and testing schedule to allow for witnessing of the tests.

3. Provide a signed certificate stating the installation meets or exceed the manufacturer’s installation standards and instructions.

4. Start-up shall include a “cold start” test.

5. Start-up shall verify all local and remote warnings, shutdowns and alarming events are operating as specified.

6. Perform a power failure test on the entire installed system. The test shall be conducted by opening the power supply from the utility service and observing proper operation of the system for at least thirty minutes.

7. Reference the Start-up and Testing specification Section in the Contract Documents for a detailed check list for all processes on the project. The Contractor shall go through the check list to verify compliance and that ask the ENGINEER to witness the tests as the CONTRACTOR goes through them a second time.

8. Coordinate start-up and testing with the transfer switch start-up.

9. Startup shall include operating the generator set with a load bank connected and operating at full load for a minimum of four continuous hours.

10. The CONTRACTOR is responsible to provide diesel fuel for the start-up and testing activities. After start-up and testing is completed and accepted and before substantial completion, the CONTRACTOR shall completely fill the diesel fuel tank.

11. Verification that the generator set and associated specified components are operating as specified.

12. Provide a printout of all as-commissioned adjustable set points for future reference.

D. Seismic Anchoring and Bracing

1. The design of the seismic anchoring and bracing system shall be by a licensed Structural Engineer in the State of Oregon. The CONTRACTOR shall arrange and pay for the services of the licensed Engineer.

2. Wet stamped and signed calculations and drawing of the seismic anchoring and bracing system shall be submitted to the Architect and Engineer for review and approval.

E. Demonstration and Training.

1. An authorized employee of the manufacturer's service division shall perform the demonstration and training services. The demonstration and training period shall last a minimum of 4 hours and shall be provided on site.

2. The OWNER reserves the right to video tape the demonstration and training presentation for future in-house use.

3. Provide training handouts for 10 persons.

END OF SECTION

(THIS PAGE LEFT BLANK INTENTIONALLY)

SECTION 26 51 00

INTERIOR LIGHTING

PART 1 - GENERAL

1.01 SUMMARY

A. Section Includes.

1. This Section includes the requirements for the interior illumination fixtures and controls.

1.02 SUBMITTALS

A. Contractor shall submit all the product data in Division 26 at the same time. Piecemeal submittals will be rejected as incomplete.

B. Submittal Format:

1. The product data shall be provided as individual PDFs for each Section, unless otherwise noted for specific items. Each PDF shall be numbered to match the specification Section numbers. Submittals not itemized and labeled as specified will be rejected as incomplete.

2. A submittal is required for each product specified. Each individual product submittal shall have the corresponding Reference Keynote Number (example - 260000.A01) typewritten in the upper right hand corner of the submittal. The submittals within each Section tab shall be in the same sequential order as they are listed in the specification Section. Submittals not containing the Reference Keynote Number will be rejected as incomplete.

3. No typical submittals will be accepted. Each submittal shall be project specific and clearly identify specifically which components or parts are being submitted for approval. Any product submittals, such as a catalog sheet, which do not clearly identify which components or parts are being submitted for approval, will be rejected as incomplete.

4. Submittals in PDF shall include an index, table of contents, or bookmarks with hyperlinks to the associated page of all submitted items. Index shall include each product specified with their corresponding Reference Keynote Number. Electronic submittals not containing a linked index, table of contents, or bookmarks will be rejected as incomplete.

C. Refer to Section 26 05 00 – Common Work Results for Electrical Submittals for additional requirements.

D. Product Data

1. Pursuant to Section 01 33 00 – Submittals.

2. Manufacturer's data including materials of construction, methods of installation and related information for each item specified in PART 2 PRODUCTS.

1.03 QUALITY ASSURANCE

A. Regulatory Requirements.

1. All products shall be UL listed for the environment they are installed in.

PART 2 - PRODUCTS

2.01 FIXTURES

A. Fixtures shall be provided as identified on the Luminaire Schedule in the Drawings.

PART 3 - EXECUTION

3.01 INSTALLATION

A. General:

1. All identification labeling shall be in compliance with Section 260553 Electrical and Control Identification.
2. CONTRACTOR shall provide all mounting hardware required to mount luminaires in lay-in or gypsum board ceilings. Verify ceiling types with the ARCHITECT. Luminaires of a given type may be used in more than one type of ceiling.
3. Luminaires shall be supported by #12 AWG hanger wire connected to the luminaire and the building structure.
4. Positively attach all luminaires to the suspended ceiling system. Attachment devices shall have capacity of 100% of the luminaire weight acting in any direction.
5. Verify luminaire locations with the ARCHITECT'S reflected ceiling plan.
6. Adjustable luminaire heads shall be aimed as directed by the ENGINEER.
7. All luminaires shall be cleaned of all dirt, dust, and finger prints prior to close-out.

END OF SECTION

SECTION 26 56 00

EXTERIOR LIGHTING

PART 1 - GENERAL

1.01 SUMMARY

A. Section Includes.

1. This Section includes the requirements for exterior illumination fixtures and control.

1.02 SUBMITTAL

A. Contractor shall submit all the product data in Division 26 at the same time. Piecemeal submittals will be rejected as incomplete.

B. Submittal Format:

1. The product data shall be provided as individual PDFs for each Section, unless otherwise noted for specific items. Each PDF shall be numbered to match the specification Section numbers. Submittals not itemized and labeled as specified will be rejected as incomplete.

2. A submittal is required for each product specified. Each individual product submittal shall have the corresponding Reference Keynote Number (example - 16000.A01) typewritten in the upper right hand corner of the submittal. The submittals within each Section tab shall be in the same sequential order as they are listed in the specification Section. Submittals not containing the Reference Keynote Number will be rejected as incomplete.

3. No typical submittals will be accepted. Each submittal shall be project specific and clearly identify specifically which components or parts are being submitted for approval. Any product submittals, such as a catalog sheet, which do not clearly identify which components or parts are being submitted for approval, will be rejected as incomplete.

4. Submittals in PDF shall include an index, table of contents, or bookmarks with hyperlinks to the associated page of all submitted items. Index shall include each product specified with their corresponding Reference Keynote Number. Electronic submittals not containing a linked index, table of contents, or bookmarks will be rejected as incomplete.

C. Refer to Section 26 05 00 – Common Work Results for Electrical Submittals for additional requirements.

D. Product Data

1. Pursuant to Section 01 33 00 – Submittals.

2. Manufacturer's data including materials of construction, methods of installation and related information for each item specified in PART 2 PRODUCTS.

1.03 QUALITY ASSURANCE

A. Regulatory requirements.

1. Products provided shall be UL listed for the environment in which they are installed.

PART 2 - PRODUCTS

2.01 FIXTURES

A. Provide fixtures as identified on the Luminaire Schedule on the Drawings.

PART 3 - EXECUTION

3.01 INSTALLATION

A. General.

1. All identification labeling shall be in compliance with Section 26 05 53 Identification For Electrical Systems.

2. Fixtures mounted above doors shall be centered unless specifically called out otherwise on the Drawings.

3. Fixtures mounted on the exterior of split face block shall be fed with a conduit entering the back of the fixture routed from the interior of the building. Mounting the fixture on a box is unacceptable.

4. Use stainless steel mounting hardware.

5. Mount at the height shown on the Drawings.

6. Fixtures mounted on the building shall have a photo electric control with a manual toggle switch override unless shown differently on the drawings.

B. Light Poles.

1. Shall be mounted level and plumb.

2. Shall be installed per the detailed Drawing. Provide the rebar, anchor bolts and 3000 PSI concrete for the pole bases.

3. Light fixture heads shall be oriented as shown on the Drawings.

4. Using non-shrink grout, the CONTRACTOR shall grout smooth all exposed areas of the concrete pole base, filling all air pockets and irregularities.

C. Photo Electric Switch.

1. Externally mounted photo electric switches shall be oriented north if at all possible.

2. Shall be oriented away from artificial light sources.

END OF SECTION

SECTION 27 32 00

TELEPHONE AND DATA EQUIPMENT

PART 1 - GENERAL

1.01 SUMMARY

A. Section Includes

1. Requirements for telephone, data communication systems.

2. The requirements of Section 26 05 00 – Common Work Results for Electrical shall apply to the work performed under this Section.

1.02 REFERENCES

A. National Fire Protection Agency (NFPA)

1. 70, National Electrical Code (NEC).

B. American National Standards Institute (ANSI)

1. ANSI/J-STD-607-A: Commercial building grounding and bonding requirements for telecommunications current edition.

C. Electronics Industries Association (EIA)

D. Telecommunications Industry Association (TIA)

E. Conduit and installation requirements of telephone utility.

1.03 SYSTEM DESCRIPTIONS

A. CONTRACTOR shall provide new communication services for the following systems:

1. Internet

2. Phone (POTS)

B. CONTRACTOR shall coordinate with the communication service provider the following requirements:

1. Quantity, size, and routing of new communication service conduits

2. Trenching and backfilling

3. Boring beneath roadways

4. Penetrations into existing building

1.04 SUBMITTALS

A. Contractor shall submit all the product data in Division 26 at the same time. Piecemeal submittals will be rejected as incomplete.

B. Submittal Format:

1. The product data shall be provided as individual PDFs for each Section, unless otherwise noted for specific items. Each PDF shall be numbered to match the

specification Section numbers. Submittals not itemized and labeled as specified will be rejected as incomplete.

2. A submittal is required for each product specified. Each individual product submittal shall have the corresponding Reference Keynote Number (example - 16000.A01) typewritten in the upper rright hand corner of the submittal. The submittals within each Section tab shall be in the same sequential order as they are listed in the specification Section. Submittals not containing the Reference Keynote Number will be rejected as incomplete.

3. No typical submittals will be accepted. Each submittal shall be project specific and clearly identify specifically which components or parts are being submitted for approval. Any product submittals, such as a catalog sheet, which do not clearly identify which components or parts are being submitted for approval, will be rejected as incomplete.

4. Submittals in PDF shall include an index, table of contents, or bookmarks with hyperlinks to the associated page of all submitted items. Index shall include each product specified with their corresponding Reference Keynote Number. Electronic submittals not containing a linked index, table of contents, or bookmarks will be rejected as incomplete.

C. Refer to Section 26 05 00 – Common Work Results for Electrical Submittals for additional requirements.

D. Product Data

1. Pursuant to Section 01 33 00 – Submittals.

2. Manufacturer’s data including materials of construction, methods of installation and related information for each item specified in PART 2 PRODUCTS.

PART 2 - PRODUCTS

2.01 MATERIALS

A. Conduit vaults and pulling rope shall be provided as per the Contract Documents and the utility’s requirements.

PART 3 - EXECUTION

3.01 INSTALLATION

A. All identification labeling shall be in compliance with Section 26 05 53 Identification For Electrical Systems.

B. Install conduit, pull lines, phone board, grounding, bonding in accordance with the Contract Documents and the utility's requirements

END OF SECTION

SECTION 31 00 00

EARTHWORK

PART 1 - GENERAL

1.01 SECTION INCLUDES

A. Earthwork requirements for sitework, structures, roads and general earthwork, including excavation, fill, backfill, grading, and compaction; import of material; and disposal of surplus and unsuitable materials.

B. Refer to Section 31 23 16.13 for earthwork related to pipeline installation.

1.02 REFERENCED SECTIONS

A. The following Sections are referenced in this Section

1. Section 01 33 00 – Submittals
2. Section 31 10 00 – Site Preparation
3. Section 31 23 16.13 – Trenching
4. Section 31 23 16.26 – Rock Excavation
5. Section 31 23 19 – Dewatering
6. Section 31 50 00 – Excavation Support and Protection
7. Section 32 11 23 – Aggregate Base Course Material

1.03 DEFINITIONS

A. Backfill: Earthwork necessary to add fill between new structures and the excavation up to the sub or finish grade.

B. Borrow Area: Area identified from which to obtain earthwork materials.

C. Cut: Earthwork necessary to remove existing material to lower the existing grade in elevation to sub or finish grade.

D. Embankment: Materials placed to form the subgrade for roadways or site improvements.

E. Excavation: Earthwork necessary to remove existing material for the installation of structures.

F. Fill: Earthwork necessary to add material to bring the existing grade up in elevation to sub or finish grade.

G. Finish Grade: Final surface following placement of surfacing, if any, as indicated.

H. Subgrade: The surface of the earthwork on which pavement, surfacing, base, subbase, or a layer of any other material is placed.

1.04 SUBMITTALS

A. Prepare submittals and submit in accordance with Section 01 33 00.

B. For imported materials, provide certification and source.

C. For excavations 5 feet or deeper: Submit detailed plan of all shoring, bracing, side sloping, or other provisions for worker protection against the hazard of caving ground during excavations in accordance with Section 31 50 00.

1.05 QUALITY ASSURANCE

A. Materials and Compaction Testing.

1. Source testing of materials: Provided and paid for by Contractor.

2. Field testing of compaction: Provided and paid for by Owner.

B. Compaction Testing Standards

1. In-place Density of Compacted Fill Material: Density determined in the field in accordance with ASTM D6938 – Standard Test Methods for In-Place Density and Water Content of Soil and Soil-Aggregate by Nuclear Methods (Shallow Depth).

2. Maximum Dry Density of Compacted Material: determined in the laboratory in accordance with Method C of ASTM D1557-12e1 – Standard Test Methods for Laboratory Compaction Characteristics of Soil Using Modified Effort (56,000 ft-lbf/ft^3 (2,700 kN-m/m^3)).

C. Material Testing Standards:

1. Particle size analysis of soils and aggregates: ASTM D6913 – Standard Test Methods for Particle-Size Distribution of Soils Using Sieve Analysis. ASTM D7928– Standard Test Method for Particle-Size Distribution of Fine-Grained Soils Using the Sedimentation Analysis.

2. Determination of sand equivalent value: ASTM D2419 – Standard Test Method for Sand Equivalent Value of Soils and Fine Aggregate.

3. Liquid limit, plastic limit, and plasticity index: ASTM D4318 – Standard Test Method for Liquid Limit, Plastic Limit, and Plasticity Index of Soils.

4. The testing for organic matter: ASTM D2974 – Standard Test methods for Moisture, Ash, and Organic Matter of Peat and Other Organic Soils.

D. References in this section to soil classification types and standards shall have the meanings and definitions indicated in ASTM D2487 – Standard Practice for Classification of Soils for Engineering Purposes. Contractor shall be bound by all applicable provisions of ASTM D2487 in the interpretation of soil classifications.

PART 2 - PRODUCTS

2.01 MATERIALS

A. General fill, backfill, and embankment materials:

1. Selected or processed clean earth, rock, or sand, free from grass, roots, brush, other vegetation, corrosive and hazardous materials, manmade objects, and debris.

2. Materials not defined as unsuitable as indicated below, except some materials listed as unsuitable may be used, if indicated on the Drawings or when acceptable

to the Engineer, when thoroughly mixed with suitable materials to form a stable composite.

3. Obtain suitable materials from one or more of the following:

4. Onsite excavations and designated borrow areas.

5. Processed on-site materials.

6. Onsite soils are not suitable for use as structural fill.

7. Imported from offsite borrow areas and processing plants.

8. If imported materials are required by this Section, or to meet the quantity requirements of the Project, provide the imported materials at no additional expense to Owner, unless a unit price item is included for imported materials in the Bidding Schedule.

9. Large rocky material: When embankment material consists of large rocky material, or hard lumps, such as hardpan or cemented gravel which cannot be broken down readily, distribute such material evenly throughout the embankment. Place sufficient earth or other fine material around the larger material as it is deposited so as to fill the interstices and produce a dense, compact embankment. Do not place rocks larger than 6 inches in diameter within the upper 2 feet of the embankment subgrade.

10. Further condition fill, backfill, and embedment materials as described below or as indicated on the Drawings.

B. Structural Fill

1. 1.5 inch or ¾ inch minus Dense Graded Aggregates as Defined in Section 02630-10 of the Oregon Standard Specifications for Construction

C. Structure Backfill Material

1. Open Graded Aggregate as defined in Section 2630.11 of the Oregon State Standard Specifications for Construction

D. Subgrade Stabilization material

1. Well graded granular material

2. Maximum size of 4 inches

3. Less than 5 percent passing the No. 4 Sieve

4. Free of organic material

E. Reinforcement Geotextile:

1. Permeable, woven

2. Polypropylene, polyester or a combination of both

3. Meeting requirements of Type 2 Woven Riprap Geotextile, as defined in Table 02320-2 of the Oregon State Standard Specification for Construction

4. Approved manufacturers

a. TenCate Mirafi, RS 380i

F. Aggregate Base Course Material: In accordance with Section 32 11 23.

G. Sand:

1. Clean, coarse, natural sand free from organic material, suitable for the purpose intended.

2. Gradation: 90 percent to 100 percent will pass a No. 4 sieve and not more than 5 percent will pass a No. 200 sieve.

2.02 UNSUITABLE MATERIALS

A. Unsuitable materials include the materials listed below:

1. Soils which, when classified under ASTM D2487, fall in the classifications of Pt, OH, CH, MH, or OL, or in a classification that contains Pt, OH, CH, MH, or OL in combination with any other letter designation, such as CH/CL.

2. Soils which cannot be compacted sufficiently to achieve the density specified for the intended use, or are unstable or pump regardless of the degree of compaction.

3. Materials that contain hazardous or designated waste materials including petroleum hydrocarbons, pesticides, heavy metals, and any material which may be classified as hazardous or toxic according to applicable regulations.

4. Soils that contain greater concentrations of chloride or sulfate ions, or have a soil resistivity or pH less than the average values for existing onsite soils.

5. Topsoil, sludge and sludge-entrained soils.

6. Rocks, stones, and boulders larger than 6-inches in diameter.

7. Onsite soils are not suitable for use as structural fill.

2.03 SOURCE QUALITY CONTROL

A. Materials source testing will be performed by a testing laboratory by a third-party special inspections and testing firm retained by the Owner.

B. Minimum Frequency of sampling:

1. Fill, backfill and embankment material generated from earthwork activities:

2. Two soil samples every 500 cubic yard of material used.

3. Two soil samples whenever the character of the soil changes.

4. One soil sample when directed by the Engineer.

5. Obtain samples that represent the predominate character of the soil that is encountered.

6. Sampling of Imported Material

7. Obtain representative samples of product from supplier.

8. After initial testing demonstrated that the proposed borrow material meets the specified requirements, obtain and test one additional sample for every 500 cubic yard of imported material.

C. Testing:

1. Test all materials used in the Work to confirm they meet the requirements indicated.

2. Prepare moisture-density curves for use in determining the optimum moisture content and in-place density of the compacted backfill.

PART 3 - EXECUTION

3.01 EXCAVATION – GENERAL

A. Excavation includes the removal of all materials of whatever nature encountered, including all obstructions of any nature.

B. Excavation shall conform to the lines and grades indicated on the Drawings.

C. Clear, grub and strip and remove topsoil in construction and borrow areas in accordance with Section 31 10 00.

D. Excavation Stability

1. Slope excavated faces or otherwise support in a safe manner in accordance with applicable State safety requirements and the requirements of OSHA Safety and Health Standards for Construction (29CFR1926) and in accordance with Section 31 50 00.

2. Furnish, and place the supports and shoring required to maintain stability of all sides of the excavations.

E. Notify Engineer at least 1 working day in advance of completion of any structure excavation to allow inspection of the exposed subgrade before it is covered with backfill or with any construction materials.

F. Erosion Control:

1. Maintain earthwork surfaces true and smooth and protected from erosion.

2. Construct erosion control measures identified in the Erosion and Sediment Control Plan prior to any clearing or grading activity.

G. Control of Water: Control water entering the excavation as indicated in Section 31 23 19.

H. Existing Underground Utilities:

1. Known existing underground utilities are generally shown on the Drawings in their approximate locations based on information of varying accuracy.

2. Exercise care to avoid damage to all existing utilities whether shown or not.

3. Conduct field explorations to locate all underground utilities in the vicinity of the Earthwork activities in accordance with Section 31 10 00.

4. Alert the Engineer of the presence of existing utilities that are not shown on the Drawings or are in locations different than those shown on the Drawings.

I. Existing Overhead Utilities: There may be existing overhead utilities in the vicinity of the Work which may or may not be shown on the Drawings. Identify existing overhead utilities, if any, and use extreme caution when working in the vicinity of overhead utilities.

3.02 EXCAVATION FOR FILLS AND EMBANKMENTS

A. Benching and Keyways:

1. Where fill is to be placed against existing subgrade or existing grade that is sloped, excavate horizontal benches a minimum of 5 feet wide and located at vertical intervals of not more than 5 feet to provide for placement and compaction of the new fill on horizontal surfaces.

2. Excavate keyway along the base of the existing slope:

3. Extend the keyway at least 3 feet into competent native soil.

4. Width of Keyway: Minimum of 15 feet.

5. Keyway Side Slopes: Inclined at approximately 0.75:1.

6. Keyway Subgrade: Scarify the upper 8-inches of the exposed surface, moisture condition and re-compact.

B. Subgrade Preparation:

1. Subgrade Beneath Embankments:

2. Expose competent native soil within the planned new embankment footprint.

3. Scarify the exposed subgrade to a depth of 12 inches or depth to bedrock, moisture condition as necessary and re-compact.

4. Subgrade Beneath Paved Areas:

a. Excavate to the subgrade soils beneath the bottom of the subbase.

b. Place reinforcement geotextile as shown on drawings.

c. Finished subgrade shall be even, self-draining, and in conformance with the slope of the finished pavement.

5. Subgrade Beneath Structures:

6. At grade structures

1) Excavate 3 feet of undocumented fill or to basalt rock layer and replace with compacted imported structural fill.

2) Extend imported structural fill horizontally beyond the exterior perimeter of the building and footing a distance equal to the height of the fill or 3 feet whichever is greater.

7. Below grade structures

1) Excavate to basalt rock layer and replace with compacted imported structural fill.

2) Provide a minimum of 2 and a maximum of 12 inches of imported structural fill as leveling course for spread and continuous footing over the basalt rock subgrade.

3) Provide a 6-inch layer of imported structural fill for mat foundation over the basalt rock subgrade.

4) Extend imported structural fill horizontally beyond the exterior perimeter of the building and footing a distance equal to the height of the fill or 3 feet whichever is greater.

3.03 EXCAVATION IN VICINITY OF TREES

A. Except where trees are indicated to be removed, protect trees form injury during construction.

B. Do not cut tree roots over 2 inches in diameter without permission of the Engineer.

C. Support trees during excavation by means approve by the Engineer.

3.04 OVER-EXCAVATION NOT ORDERED OR INDICATED

A. Backfill areas over-excavated with the materials indicated for the backfill above the over-excavation or Aggregate Base.

B. Backfill the over-excavation to restore the required subgrade elevation and compact.

C. Any over-excavation carried below the grade indicated on the Drawings will be at no additional cost to Owner.

3.05 OVER-EXCAVATION WHERE ORDERED BY ENGINEER

A. Where ordered by the Engineer, over-excavate beyond the depth of subgrade indicated to the dimensions ordered.

B. Backfill areas over-excavated with the materials indicated for the backfill above the over-excavation or Aggregate Base.

C. Backfill the over-excavation to restore the required subgrade elevation.

D. Over-excavation less than 6 inches below the limits indicated: At no increase in cost to Owner.

E. Over-excavation greater than 6 inches below the limits indicated: Payment will be made under separate unit price bid items for over-excavation if such bid items have been established. Otherwise, payment will be made in accordance with a negotiated price.

F. Measurement and Payment

1. Measurement of quantities for payment of over-excavation: By calculation by Engineer of the volume of materials removed as over-excavation based on the difference between the excavation dimensions before and after the over-excavation work. No compensation will be made for removal of materials beyond the limits of the additional excavation ordered by Engineer or for materials which may come into the excavation from outside the designated limits. No compensation will be made for removal of materials that are outside of the minimum horizontal dimensions indicated.

2. Payment for over-excavation will be made by the cubic yard. The payment shall include full compensation for furnishing all labor, materials, tools, equipment, and incidentals, and for doing all the work involved in excavating and backfilling the over-excavation completely. Payment shall also include full compensation for

the removal and disposal of the excavated materials, import and installation of backfill materials, control of water in the excavation, excavation support, and all costs associated with interruption of construction operations during the review of the foundations, over-excavation, backfill, and all other operations required for, or as a result of, over-excavation.

3.06 ROCK EXCAVATION

A. Perform rock excavation in accordance with Section 31 23 16.26.

3.07 DISPOSAL OF UNSUITABLE, EXCESS EXCAVATED AND OTHER MATERIALS

A. The Owner has identified a site for disposal of clean excess excavated earth materials located at Quarry Park, 3101 Zelkova Street, Sweet Home, Oregon 97386. The Contractor may use a different disposal site with written authorization from the property owner of the disposal site. Clean materials shall meet the requirements of Section 2.01.A.1.

B. Dispose unsuitable materials at an appropriate site selected by Contractor unless otherwise indicated.

C. Obtain required permits, landowner, and agency approvals for disposal of unsuitable and excess excavated materials and pay costs associated with the removal and disposal of the materials.

3.08 FILL AND EMBANKMENT CONSTRUCTION

A. Scarify foundation soils for fills and embankments bring to optimum moisture content, and re-compact with heavy compaction equipment to obtain compaction indicated.

B. Place and compact fill and embankments in horizontal layers so that when compacted layers to not exceed thickness indicated.

C. Provide keyways or benches where an embankment or fill is to be placed against slopes, hillsides, or fill slopes.

D. Slopes: Construct slopes as indicated except construct no permanent fill or embankment slopes with slope inclinations that exceed 2:1 (horizontal: vertical) unless specifically indicated otherwise

E. Over-construct fills and embankments beyond the horizontal dimensions than indicated. Cut back slope following placement and compaction to expose well compacted fill.

F. Construct the first 3 feet of embankment or fills over pipelines using placement and compaction equipment that do not damage the pipe. Keep heavy construction equipment a minimum distance of the edge of the trench equal to the depth of the trench until at least 3 feet of fill over the pipe has been placed and compacted.

3.09 STRUCTURE BACKFILL

A. Provide Structure Backfill material within 12-inches of all structures to be backfilled unless otherwise indicated.

B. Place a 6-inch layer of structural fill below all structures, unless otherwise indicated.

C. Do not drop backfill upon any structure or pipe.

D. Confirm concrete structures have attained sufficient strength to withstand the backfill loads imposed.

E. Do not place backfill around water retaining structures until structures have been tested and approved for backfill. Fill structures with water during backfill operations.

F. Place backfill after all water has been removed from the excavation and the excavation sidewalls and subgrade soils have dried to a moisture content suitable for compaction.

G. Remove all loose, sloughing, or caving soils and rock materials prior to placement of backfill.

H. Place geotextile fabric as indicated.

I. Promptly after removal, fill voids created by the extraction of sheetpile or shoring indicated in Section 31 50 00.

J. Place backfill and spread evenly in layers so that when compacted layers do not exceed thickness indicated.

K. Thoroughly mix layers as necessary to promote uniformity of material in each layer.

L. Add water to backfill material such that moisture content is below the optimum moisture content and mix with the soil until the proper moisture content is achieved throughout the soil layer.

M. Where backfill material moisture content is too high to permit the specified degree of compaction, dry backfill material until moisture content is satisfactory.

3.10 COMPACTION OF FILL, BACKFILL, AND EMBANKMENT MATERIALS

A. Adjust moisture condition of soils to achieve a water content of 2 percent, plus or minus 0.5 percent, above the optimum moisture content as determined through moisture density testing of the soil.

B. Compact each layer in a uniform and systematic manner.

C. For materials with less than 10 percent passing the No. 4 sieve, compact by means of at least 2 passes from a flat plate vibratory compactor.

D. For materials with 10 percent or more passing the No. 4 sieve, mechanically compact to the indicated percentage of density each layer of backfill materials.

1. Use equipment that is consistently capable of achieving the required degree of compaction.

2. Compact each layer over its entire area while the material is at the required moisture content.

E. For wall backfill placed within 3 feet of the wall use hand-operated tamping equipment, such as jumping jack or vibratory plate compactors.

F. Do not use flooding, ponding, or jetting as a method of compaction.

G. Do not use equipment weighing more than 10,000 lbs closer to structure walls than a horizontal distance equal to the depth of the fill at the time. Use hand operated power compaction equipment where use of heavier equipment is impractical or restricted due to weight limitations.

H. Compaction Requirements:

1. Where agency or utility company requirements govern, the highest compaction standards shall apply.

2. Compact finish and subgrades in compliance with the following table:

Location or Use of Fill	Limit/Layer Thickness	Percentage of Maximum Dry Density of Compacted Material per ASTM D1557
Imported Structural Fill General Use	8 in. Layers	92
Backfill within 3 feet of walls	Less than 6 in Layers	90
Upper 2 feet of backfill within 3 feet of walls when sidewalks or pavements are placed above the backfill	Less than 6 in Layers	95
Embankment Fill	12 in. Layers	90(1)
Subgrade beneath embankments or fill areas (upper 8 inches)	Upper 12 in.	92
Subgrade beneath structures	8 in. Layers.	92
Subgrade beneath keyway (upper 8 inches)	Upper 8 in.	95
Finish grade in unimproved or landscape areas	Upper 12 in.	85
(1) If embankment fill is non-moisture-density testable, compaction shall be assessed by proof-rolling per ODOT TM158 or other visual means per the Engineer.		

3.11 FIELD QUALITY CONTROL AND TESTING

A. Field quality control testing for compaction confirmation will be done by a testing laboratory of the Owner's choice at the Owner's expense except as indicated below.

B. If requested by the Owner, remove soil above the level at which the Owner wishes to test. Backfill and re-compact material after testing is completed.

C. If compaction fails to meet specified requirements, perform remedial work by one of the following methods:

1. Remove and replace backfill at proper density.

2. Bring density up to specified level by other means acceptable to Owner.

3. Retesting:

a. Costs for conducting additional tests to confirm and verify that remedial work has brought compaction within specified requirements shall be borne by the Contractor.

b. Conduct compaction tests at twice as frequently specified for the initial confirmation tests.

D. Where soil compaction is specified as a percentage of maximum dry density, determine the maximum dry density at optimum moisture content by laboratory testing in accordance with Method C of ASTM D1557.

E. Where compaction of cohesionless, free draining soil is specified as a percentage of relative density, determine relative density by laboratory testing in accordance with ASTM D1557.

F. Determine In-Place Density of Compacted Fill Material by performing field tests of soil density in accordance with ASTM D6938.

G. Frequency of Compaction Confirmation Testing at intervals not less than as follows:

1. Each lift shall be tested prior to placing a subsequent lift.

3.12 FINISH GRADES

A. Surface: Reasonably smooth and free of grade breaks, irregular surface changes, protrusions and other defects.

B. Restore un-improved areas back to pre-construction grades.

C. Backfill topsoil in all areas where the topsoil was removed as part of the site preparation.

D. Restore drainage swales and water courses to their pre-construction alignments and grades unless otherwise modified by the Work. Grade surface to drain away from structures. Direct drainage to collection points.

E. Provide smooth transitions to existing grades.

F. Repair and reestablish grades to required elevations and slopes due to any settlement or erosion that may occur prior to final acceptance.

G. Vertical Tolerance:

1. Subgrade under paved areas: 0.0 feet above and 0.08 feet below.

2. Subgrade under structures: 0.0 feet above and 0.08 feet below.

3. Landscaped areas: 0.1 feet above and 0.1 feet below.

4. Unimproved areas: 0.1 feet above and 0.1 feet below.

END OF SECTION

(THIS PAGE LEFT BLANK INTENTIONALLY)

SECTION 31 10 00

SITE PREPARATION

PART 1 - GENERAL

1.01 SECTION INCLUDES

A. Site preparation work, as follows:

1. Locating existing facilities.
2. Installing safety and protective barriers.
3. Constructing temporary access roads, work areas and storage areas.
4. Clearing, grubbing, stripping, and other initial work required for earthwork and trenching operations.

1.02 REFERENCED SECTIONS

A. The following Sections are referenced in this Section

1. Section 01 33 00 – Submittals
2. Section 01 72 50– Protection of Existing Facilities

1.03 DEFINITIONS

A. Clearing and Grubbing: Consists of removal of natural obstructions and man-made objects and features including foundations, buildings, fences, lumber, stumps, debris, rubbish, brush, trees, boulders, and other items that interfere with construction operations or are specifically designated for removal.

B. Stripping: Includes the removal and disposal of sod, grass, weeds, roots, and other organic material remaining after clearing has been completed.

1.04 SUBMITTALS

A. Comply with Section 01 33 00.

B. Submit:

1. Materials used and layout of temporary fences
2. Proposed staging and stockpile locations.

PART 2 - PRODUCTS

2.01 TEMPORARY FENCES

A. Type: Heavyweight, high visibility, flat laminar mesh design.

B. Material: High-density polyethylene.

C. Height: 48 inches.

D. Posts: Wood or metal posts at 10-foot spacing. Secure fence to posts with plastic cable ties.

PART 3 - EXECUTION

3.01 LOCATING EXISTING FACILITIES

A. Review the design drawings, maps, and other sources of information and identify existing facilities at the site to determine and mark the approximate locations of underground facilities.

B. Follow rules adopted by the Oregon Utility Notification Center regarding locating and marking existing buried utilities and contact owners of existing underground utilities prior to beginning work in the vicinity of their utilities.

C. Refer to Section 01 72 50. Locate all existing utilities by exploratory excavations after field marking by the utility agencies and prior to any excavations in the affected areas.

3.02 SAFETY AND PROTECTIVE BARRIERS

A. Along Public Roadways:

1. Install appropriate barriers such as temporary fencing, plastic drums, or concrete traffic barriers to protect public from construction areas and to protect workers and existing facilities from danger of passing vehicles.

B. Temporary Fences:

1. Prior to beginning excavation, erect temporary fences along boundaries of the work area indicated on the Drawings.

2. Maintain work activities within the confines of the temporary fences.

3. Remove temporary fences when work in the vicinity is substantially complete.

C. Existing Trees: Erect temporary fences around trees at the drip line that are adjacent to the Work and may be subject to damage unless protected. Maintain work activities outside of protected areas.

D. Provide protective concrete slabs, steel plates or encasements for existing buried facilities that may be damaged by Contractor's equipment and vehicles.

3.03 PRIMARY SITE ACCESS, WORK AND STORAGE AREAS

A. Coordinate with the Owner and Engineer to develop primary access routes, work areas and storage areas.

B. Protect subgrade soils in stripped and graded areas as follows:

1. Place a minimum of 12 inches of crushed rock base material in temporary construction traffic areas.

2. Place a 18-24 inches of crushed rock base material to as necessary to protect subgrade soils in heavily traveled construction traffic areas.

3. Place a minimum of 4 inches of crushed rock base material in pedestrian areas.

C. Clean up areas at the conclusion of the project and return the areas to their original or better condition.

3.04 CLEARING

A. Clear construction areas of objectionable items and material, which, if left in place, would interfere with the proper performance of the work.

B. Remove loose boulders within 10 feet from the tops of cut slopes. Incorporate boulders into landscaping or remove from the site.

C. Dispose of material from clearing operations in an acceptable off-site location.

3.05 STRIPPING

A. Remove the top layer of soil containing sod, grass, weeds, other vegetation, and organic material to a depth of 6 inches from areas that will be affected by construction and site grading operations.

B. Extend stripped areas at least 4 feet beyond the limits of cut and fill areas.

C. Protect soils in stripped areas as described in Section 3.03.

D. Dispose of stripped material in an acceptable off-site location.

3.06 TREE REMOVAL

A. Remove specific trees indicated on the Drawings for removal. Cut tree so they fall into the area being cleared. Cut stumps no higher than 4 inches above the ground surface if the tree is within an area that will otherwise be undisturbed. Remove felled tree from the site.

B. Timber Salvage: Owner may elect to retain felled trees within 7 calendar days. If Owner chooses not to retain felled trees, the ownership of timber shall revert back to the Contractor.

3.07 REMOVAL OF EROSION CONTROL DEVICES

A. Remove erosion control devices when bare soils are sufficiently revegetated to prevent on-site or off-site soil erosion, if authorized by the Engineer.

B. Straw wattles containing plastic netting, including plastic specified as phot-degradable, may not remain on site. Remove entire wattle or remove and dispose of plastic netting and spread straw from wattle across vegetated areas of site.

END OF SECTION

(THIS PAGE LEFT BLANK INTENTIONALLY)

SECTION 31 23 16.13

TRENCHING

PART 1 - GENERAL

1.01 SECTION INCLUDES

A. Trench excavation and backfilling for pipe and pipeline appurtenances.

B. Minor structure excavation and backfill associated with pipeline construction.

1.02 REFERENCED SECTIONS

A. The following Sections are referenced in this Section

1. Section 01 12 16 – Work Sequence and Constraints
2. Section 01 33 00 – Submittals
3. Section 01 72 50 – Protection of Existing Facilities
4. Section 03 30 00– Cast-in-Place Concrete
5. Section 03 60 00 –Grout
6. Section 31 10 00 – Site Preparation
7. Section 31 23 16.26– Rock Excavation
8. Section 31 23 19 – Dewatering
9. Section 31 23 23.33– Controlled Low Strength Material
10. Section 31 50 00– Excavation Support and Protection
11. Section 32 01 16– Pavement Restoration
12. Section 32 11 23– Aggregate Base Course Material

1.03 DEFINITIONS

A. Backfill: Earthwork necessary to provide fill between new structures and excavation up to the sub or finish grade.

B. Bedding Zone: The area from the trench subgrade to the bottom of the pipe.

C. Embedment or Pipe Zone: The area from the top of the Bedding Zone to the bottom of the Trench Zone as indicated on the Drawings.

D. Excavation: Earthwork necessary to remove existing material for the installation of structures.

E. Finish Grade: Final surface following placement of surfacing, if any, as indicated.

F. Native Material: Naturally occurring soils excavated from the trench after top soil, if any, has been removed.

G. Open Areas: Areas along the pipeline route that are outside Roadway Shoulders or in open pasture.

H. Pavement Section: The upper portion of the trench within paved areas comprising the base and finished surface materials.

I. Roadway Shoulders: Paved areas and unpaved areas outside the traveled way and extending to the outside edge of any roadside drainage features.

J. Spoils: Unsuitable or excess excavated materials.

K. Subgrade: The surface of the earthwork on which bedding, base materials, pavement, other surfacing materials, or structure bases are placed.

L. Traveled Way: The portion of the roadway where vehicles travel, does not include shoulders.

M. Trench Backfill: Materials used to backfill the trench including bedding zone, pipe zone, and trench zone backfill.

N. Trench Zone: The area from the top of the Pipe Zone to the bottom of the pavement base (subgrade), ground surface or other surface material over the trench excavation.

O. Wet Trench: Trench with water or groundwater present in the trench.

1.04 SUBMITTALS

A. Prepare submittals and submit in accordance with Section 01 33 00.

B. Material Data: Submit the following for each material type imported to the site:

1. Material source.

2. Gradation.

3. Moisture-density curves.

4. Permeability tests (for clay material).

C. All material submittals must be dated to less than 1 year prior to Notice-to-proceed.

D. For excavations 5 feet or deeper, submit detailed plan of all shoring, bracing, side sloping, or other provisions for worker protection, as well as the protection of existing adjacent utilities and structures, against the hazard of caving ground during excavations in accordance with Section 31 50 00.

E. Submit name and qualifications of materials testing lab for Contractor furnished testing.

1.05 QUALITY ASSURANCE

A. Materials and compaction testing

1. Source Testing of Materials: Provided and paid for by Contractor

2. Field Testing of Compaction: Provided and paid for by Owner.

3. For contractor provided testing, provide testing performed by a qualified testing laboratory approved by the Owner. Submit testing laboratory qualifications for approval.

B. Compaction Testing:

1. In-place Density Testing of Compacted Fill Material: ASTM D6938 – Test Methods for Density of Soil and Soil Aggregate by Nuclear Methods (shallow depth).

2. Maximum Dry Density:

a. Cohesive soils: ASTM D1557

b. Cohesionless, free draining soils: ASTM D1557

C. Materials Testing Standards:

1. Particle size analysis of soils and aggregates: ASTM D422 – Method for Particle-Size Analysis of Soils.

2. Determination of sand equivalent value: ASTM D2419 – Test Method for Sand Equivalent Value of Soils and Fine Aggregate.

3. Liquid limit, plastic limit, and plasticity index: ASTM D4318 – Standard Test Method for Liquid Limit, Plastic Limit, and Plasticity Index of Soils.

4. Testing for organic matter: ASTM D2974 – Standard Test methods for Moisture, Ash, and Organic Matter of Peat and Other Organic Soils.

5. Testing for percentage of fractured particles: ASTM D5821.

6. References in this section to soil classification types and standards: Meanings and definitions indicated in ASTM D2487 – Classification of Soils for Engineering Purposes.

PART 2 - PRODUCTS

2.01 MATERIALS

A. General:

1. Obtain trench backfill materials from one or more of the following:

a. Imported from off-site borrow areas,

b. Processing plants.

2. Provide materials as indicated or as may be necessary to complete the Work at no additional cost to the Owner, unless a unit price item is included for trench backfill materials in the bidding schedule.

3. Provide materials as indicated in the Schedule in PART 3.

4. Soils unsuitable for use as trench backfill materials:

a. Soils classified under ASTM D2487 categories Pt, OH, CH, MH, or OL; or soils that contain classifications Pt, OH, CH, MH, or OL in combination with any other soil classification, such as CH/CL.

b. Soils which cannot be compacted sufficiently to achieve the density specified for the intended use, are highly expansive, or are unstable or "pump", regardless of the degree of compaction.

c. Soils that contain hazardous or designated waste materials including petroleum hydrocarbons, pesticides, heavy metals, and any material which may be classified as hazardous or toxic according to applicable Regulations.

d. Soils that contain greater concentrations of chloride or sulfate ions, or have a soil resistivity or pH less than the existing on-site soils.

e. Topsoil, except as allowed below.

f. Soils containing rocks, stones, or boulders larger than specified.

g. Soils that contain more than 5 percent organic matter when tested in accordance with ASTM D2974.

B. Structural Fill

1. 3/4 inch minus Dense Graded Aggregates as Defined in Section 02630-10 of the Oregon Standard Specifications for Construction

C. Subgrade Stabilization material

1. Well graded granular material

2. Maximum size of 4 inches

3. Less than 5 percent passing the No. 4 Sieve

4. Free of organic material

D. Controlled Low Strength Material (CLSM): As specified in Section 31 23 23.33.

E. Aggregate Base: As specified in Section 32 11 23.

F. Reinforcement Geotextile:

1. Permeable, woven

2. Polypropylene, polyester or a combination of both

3. Meeting requirements of Type 2 Woven Riprap Geotextile, as defined in Table 02320-2 of the Oregon State Standard Specification for Construction

4. Approved manufacturers

a. TenCate Mirafi, RS 380i

G. Structure Backfill Material:

1. Open Graded Aggregate as defined in Section 2630.11 of the Oregon State Standard Specifications for Construction

H. Concrete: In accordance with Section 03 30 00.

2.02 SOURCE QUALITY CONTROL

A. Perform source quality control testing by approved testing laboratory and submit results to Owner.

B. Frequency of Sampling of Imported Material: After initial testing demonstrates that the proposed borrow material meets the specified requirements, obtain and submit one additional sample for every 500 cubic yards of imported material.

PART 3 - EXECUTION

3.01 EXISTING UTILITY LOCATIONS

A. Perform subsurface investigations to locate existing underground utilities in accordance with Section 01 72 50.

3.02 REMOVAL AND REPLACEMENT OF PAVEMENT

A. In paved areas, remove and replace pavement as follows unless otherwise indicated:

1. Saw cut existing pavement along each side of the trench.

2. Remove and dispose of the pavement lying within the limits of the saw cuts and from adjoining areas damaged by the cutting, removal, excavation and backfilling operations.

3. During subsequent trench excavation and backfill activities, minimize disturbance of the adjoining pavement.

4. Restore pavement surfaces in accordance with Section 32 01 16.

5. Refer to drawings and Section 01 12 16 for additional pavement removal and replacement requirements.

3.03 TRENCH EXCAVATION

A. General Requirements

1. Stabilize and support all faces of the trench excavation as specified in Section 31 50 00.

2. Control groundwater as specified in Section 31 23 19.

3. Clear, grub, and strip construction area as necessary to remove all vegetation and top soil as specified in Section 31 10 00.

B. Open Trenches

1. Open Trench Limitations: Unless otherwise indicated or required by the Agency having jurisdiction limit open trenches as follows:

2. Paved surfaces, travelled ways, roadways, and shoulders:

a. Do not open more than 300 lineal feet of excavated trench at any one time during the Work shift.

b. Up to 50 feet of trench as measured at the surface may remain open during any non-work shift, provided:

1) The entire trench opening is covered with steel plates, secured to avoid movement, and the edges backfilled with temporary pavement to provide a smooth transition.

2) Shoring is installed to prevent collapse of the trench excavation.

3. Open areas: Do not open more than 300 lineal feet of excavated trench at one time.

4. Open Trench Safety Requirements:

a. Erect traffic barricades and warning lights meeting safety requirements of Oregon Standard Specifications for Construction Section 00221 where open trench is within 12 feet of any public travelled way.

b. Erect signs to warn oncoming vehicles of rough road or steel plates in road, as appropriate.

c. Provide fencing or warning tape to protect the public and plant staff from open trench in open areas.

C. Trench Excavations

1. Excavate trenches and maintain excavation such that pipe and pipeline accessories are installed in an open trench.

2. Excavate to subgrade elevation and to trench width dimensions indicated on the Drawings.

3. Excavate all materials of whatever nature encountered, including all obstructions of any nature that would interfere with the proper execution of the trenching Work unless otherwise indicated.

4. Where pipelines are to be installed in embankments, fills, or structure backfills, construct fill to a level at least one foot above the top of the pipe before the trench is excavated.

5. Trench shield:

a. If a moveable trench shield is used during excavation operations widen the trench width so that the shield is free to be lifted and then moved longitudinally without binding against the trench sidewalls.

b. If the trench walls cave in or slough, the trench shall be excavated as an open cut excavation with sloped sidewalls or with trench shoring, as indicated and as required by the pipe structural design.

D. Trench Bottom: Excavate and shape trench bottoms to provide uniform subgrade for placement of Bedding Material.

1. Unsuitable Hard Trench Bottom: If bottom of excavation is found to consist of rock or any material that cannot be excavated to provide uniform bearing surface:

a. Notify Engineer of the conditions encountered and obtain concurrence that an unsuitable trench bottom condition is present.

b. Remove such rock or other material to a depth of not less than 3 inches below the original design elevation of the bottom of the trench.

c. Place bedding material to restore the trench bottom to the original design elevation. Place in lifts not exceeding 8 inches in un-compacted thickness and compact to 90 percent of maximum dry density.

2. Unsuitable Soft Trench Bottom: If bottom of excavation is found to consist of soft or unstable material which is incapable of properly supporting pipe:

a. Notify Engineer of the condition encountered and obtain concurrence that an unsuitable trench bottom condition is present.

b. Place subgrade stabilization material wrapped with filter fabric. Compact until well keyed.

3. Wet Trench

a. Place a minimum of 12 inches of subgrade stabilization material wrapped in geotextile. Compact until well keyed.

4. Over-excavation

a. Over-excavation to a depth 6 inches or less below the design trench bottom shall be done at no additional cost to the Owner.

b. When the over-excavation ordered by Engineer is greater than 6 inches below the limits shown, additional payment will be made to Contractor. Additional payment will be made under separate unit price bid items for over-excavation if such bid items have been established. Otherwise, payment will be made in accordance with a negotiated price.

c. Measurement and Payment:

1) Measurement of quantities for payment of over-excavation will be by calculation by Engineer of the volume of materials removed as additional excavation, including additional material that must be excavated from slopes. Such calculation shall be based on the difference between dimensions before and after the additional excavation work. No compensation will be made for removal of materials beyond the limits of the additional excavation ordered by Engineer or for materials which may come into the excavation from outside the designated limits. No compensation will be made for removal of materials that are outside of the minimum horizontal dimensions indicated, even if Contractor has excavated wider than the minimum indicated.

2) Payment for over-excavation will be made by the cubic yard. The payment shall include full compensation for furnishing all labor, materials, tools, equipment, and incidentals, and for doing all the work involved in excavating and backfilling the over-excavation completely, to a level at the bottom of the pipe bedding indicated. Payment shall also include full compensation for the removal and disposal of the excavated materials, import and installation of the backfill materials, control of water in the excavation, excavation support, and all costs associated with the interruption of construction operations during the review of the foundations, excavation, backfill, and all other operations required for, or as a result of, over-excavation.

5. Over-excavation not ordered by the Engineer:

a. Any over-excavation carried below the grade ordered or indicated, shall be backfilled to the required grade with the indicated material and compaction. Such work shall be performed by Contractor at no additional cost to Owner.

3.04 EXCAVATION FOR MANHOLES, VAULTS AND OTHER PIPELINE STRUCTURES

A. Unless otherwise indicated, provide excavations sufficient to leave at least 12 inches clear between structure outer surfaces and the face of the excavation or any shoring which may be used to support the face of the excavation.

B. Excavate to the subgrade soils beneath the bottom of the structure or bottom of crushed rock layer where indicated.

C. Scarify the top subgrade soils to a depth of 6 inches, moisture condition, and re-compact to 90 percent of maximum dry density.

3.05 EXCAVATION IN VICINITY OF TREES

A. Except where trees are indicated to be removed, protect trees from injury during construction.

B. Do not cut tree roots over 2 inches in diameter without permission of the Engineer.

C. Support trees during excavation by means approve by the Engineer.

3.06 ROCK EXCAVATION

A. Perform rock excavation in accordance with Section 31 23 16..

3.07 WARNING TAPE INSTALLATION

A. Install warning tape and tracer wire as indicated.

B. Install warning tape centered on the pipe one (1) foot above the pipe unless otherwise indicated.

C. Overlap warning tape ends a minimum of twelve (12) inches.

3.08 TRACER WIRE INSTALLATION

A. Install tracer wire on all pipe unless otherwise indicated.

B. Install tracer wire to form an electrically continuous line.

C. Secure tracer wire to the top center of the pipe at a minimum interval of 5 feet and at each change in direction.

D. Extend the tracer wire to the surface at valve boxes, hydrants, blow-off valves, air valves and other appurtenances and loop back to the pipeline such that there is a continuous wire from end to end. Provide 12 inch pigtail in the valve or appurtenance box and 12 inch pigtail adjacent to the base of hydrants.

E. Provide 12 inch pigtail at the termination of each run of pipe included in the project. Where there is no appurtenance to be provided, install a valve box to contain the pigtail.

3.09 BEDDING ZONE

A. Bedding Material: As scheduled herein or as indicated on the Drawings

B. Depth of Bedding Material: As indicated on the Drawings.

C. Place Bedding Material in a single lift, and at uniform density, with minimum possible compaction. Grade material to allow installation of the pipe at the design elevations.

D. Depressions for Assembly of Joints

1. Dig holes for bell or coupling assembly after Bedding Material has been placed at the trench bottom and fine graded to the design elevation.

2. Create sufficient width and depth to provide ample room for tightening bolts, welding, or other joint assembly activities.

3. Excavate holes only as necessary in making joints. Ensure that pipe rests upon prepared trench bottom and is not supported by any portion of the joint.

3.10 PIPE ZONE

A. Pipe Zone Material: As scheduled herein or as indicated on the Drawings.

B. Dimensions of Pipe Zone Material: As indicated on the Drawings.

C. After the pipe is laid, place material within the Pipe Zone in lifts:

1. Place backfill only after all water is removed from the excavation and the trench sidewalls have been dried to a moisture content suitable for compaction.

2. Immediately prior to placing backfill materials remove all loose, sloughing, or caving soils and rock materials from the trench.

3. Place in lifts not exceeding 8 inches in un-compacted thickness and compact to 90 percent of maximum dry density. Maintain level backfill on each side of pipe.

4. Do not dump backfill materials directly on the pipe.

D. Pipe Displacement

1. Take necessary precautions in placement and compaction of to prevent displacement of piping.

2. In the event there is movement of the pipe, excavate and re-lay the pipe.

E. Consolidation:

1. Do not use water-settling methods to consolidate trench backfill materials.

2. Use mechanical means, shovel slicing or vibratory compaction, to compact granular backfill materials under pipe haunches.

3.11 TRENCH ZONE

A. Trench Zone Material: As scheduled herein or as indicated on the Drawings.

B. Dimensions of Trench Zone Material: As indicated on the Drawings

C. Backfill voids that may form when removing shoring and bracing.

D. Do not use water-settling methods to consolidate Trench Zone Material.

E. Under Existing Crossing Pipes or Conduits Larger than 3 Inches in Diameter

1. Backfill from the top of the Pipe Zone to the spring line of the intersecting pipe or conduit with Aggregate Base or Pipe Zone material. Place in lifts not exceeding 8 inches in compacted depth and compact to 90 percent of maximum dry density.

2. Extend Pipe Zone material 2 feet on either side of crossing pipe or conduit to 6 inches above the top of the crossing pipe.

3. Backfill remainder of trench as described in this Section.

3.12 FINAL BACKFILL ZONE

A. Unless indicated otherwise on the Drawings, restore the Site to the topography that existed prior to construction by excavation, compaction, finish grading and other earthwork operations, as necessary, for the areas affected by construction.

B. Backfill with stockpiled topsoil in all areas where the original topsoil was removed as part of the site preparation and construction activities.

C. Restore all drainage swales and water courses to their original alignments and grades.

D. Install and maintain for a period of at least one year following completion of construction in any area, the facilities and management practices required by the Project Storm Water Pollution Prevention Plan, if any.

E. Install and maintain for a period of at least one year following completion of construction in any area, the measures required by the environmental permitting Drawings, permits, and approval documents of the agencies that have issued permits for construction of the Project.

F. Inside road rights-of-way:

1. Unless otherwise indicated on the Drawings or required by the agency having jurisdiction of the road right-of-way, complete trench backfill as follows:

a. Place in lifts not exceeding 12 inches in un-compacted depth.

b. Compact to 90 percent of maximum dry density except compact to 95 percent the upper 24 inches below the finished grade.

c. Replace aggregate base course to match existing aggregate base course thickness.

d. Replace final surface as indicated on the Drawings, match existing thickness, or as required by the agency having jurisdiction of the right-of-way, whichever is greater.

G. Outside road rights-of-way:

1. Areas with unpaved surfaces:

a. Place final backfill in lifts not exceeding 12 inches in un-compacted depth and compact to 90 percent of maximum dry density.

b. In Open Areas, replace topsoil with material that was removed and stockpiled prior to trench excavation.

2. Paved plant areas or driveways:

a. Backfill in lifts not exceeding 12-inches in un-compacted depth and compact to 90 percent maximum dry density except compact the upper 24 inches to 95 percent.

b. Replace final surface as indicated on the Drawings or match existing thickness, whichever is greater.

c. Replace driveway materials in kind.

d. Match pre-construction condition or better.

e. Smooth and compact material as required to create a smooth and firm driving surface.

3.13 CONCRETE PIPE ENCASEMENT

A. Provide concrete pipe encasement where indicated on the Drawings.

B. Concrete: 2,000 psi

C. Provide temporary bulkheads to contain concrete at each end of encasement. Remove temporary bulkheads after concrete has set.

D. Install reinforcing steel, where indicated, in accordance with Section 03 30 00.

E. Mix and place concrete in accordance with Section 03 30 00.

F. Control placement of concrete to prevent movement of the pipe from either displacement or buoyancy forces.

G. Support pipeline on concrete blocks, sand bags, or pre-mixed cement bags unless otherwise noted. Place supports a minimum of 10 feet on center.

H. Maintain groundwater removal, as necessary, at least until completion of concrete placement.

I. Do not place backfill on top of concrete within 4 hours of the completion of concrete placement.

3.14 CONTROLLED LOW STRENGTH MATERIAL (CLSM)

A. Provide CLSM backfill where indicated on the Drawings.

B. Provide temporary bulkheads to contain CLSM at each end of cement slurry backfill segments. Remove temporary bulkheads after slurry has set.

C. Control placement of CLSM backfill to prevent movement of the pipe from either displacement or buoyancy forces.

D. Support pipeline on concrete blocks, sand bags, or pre-mixed cement bags unless otherwise noted. Place supports a minimum of 10 feet on center.

E. Maintain groundwater removal, as necessary, at least until completion of CLSM backfill placement.

F. Do not place backfill on top of CLSM backfill within 4 hours of the completion of CLSM placement.

3.15 STRUCTURE BACKFILL

A. Provide Structure Backfill material within 12-inches of all structures to be backfilled unless otherwise indicated.

B. Place a 12-inch layer of structure backfill material below all structures, unless otherwise indicated.

C. Do not drop backfill upon any structure or pipe.

D. Confirm concrete structures have attained sufficient strength to withstand the backfill loads imposed prior to placing backfill.

E. Do not place backfill around water retaining structures until structures have been tested and approved for backfill. Fill structures with water during backfill operations.

F. Place backfill after all water has been removed from the excavation and the excavation sidewalls and subgrade soils have dried to a moisture content suitable for compaction.

G. Remove all loose, sloughing, or caving soils and rock materials prior to placement of backfill.

H. Place geotextile fabric as indicated.

I. Promptly after removal, fill voids created by the extraction of sheetpile or shoring with sand-cement grout that conforms to Section 03 60 00.

J. Place backfill and spread evenly in layers so that when compacted layers do not exceed thickness indicated.

K. Thoroughly mix layers as necessary to promote uniformity of material in each layer.

L. Add water to backfill material where moisture content is below the optimum moisture content and mix with the soil until the proper moisture content is achieved throughout the soil layer.

M. Compact backfill to 90 percent of maximum dry density except compact to 95 percent in the upper 24-inches below the finished grade.

3.16 COMPACTION REQUIREMENTS

A. Compaction requirements specified herein are in-place densities of compacted backfill.

B. Initial Trench Backfill Compaction Demonstration

1. Demonstrate adequacy of compaction equipment and procedures within the initial 100 lineal feet of trenching work.

2. Continued Compaction Requirements: When specified degree of compaction is achieved, proceed with trenching and backfilling activities using the established equipment and procedures.

3.17 DISPOSAL OF SPOILS

A. Dispose of spoils and unsuitable materials in a lawful manner at an off-site location.

B. A spoils disposal area has not been identified for this project. It is Contractor’s responsibility to identify spoils disposal areas and to negotiate all agreements necessary and pay all costs to dispose of spoils.

C. Obtain written permission and landowner agreements that allows the disposal of spoils and contains language that states that Owner, Engineer, and Design Consultant shall not be liable for any claims or damages resulting from Contractor's use of properties for disposal of spoils.

D. Prior to removal of any materials from the project site, provide copies of permits, landowner agreements, and approvals to Engineer.

3.18 FIELD QUALITY CONTROL

A. Cost of compliance testing: By Owner with coordination and scheduling by Contractor.

B. Frequency of testing: Periodic compliance tests will be made by the Engineer to verify that compaction is meeting requirements specified.

C. Contractor’s responsibilities:

1. Coordinate compaction testing and compliance with Owner.

2. Submit copies to the Owner of compaction testing results for compaction testing conducted by others.

3. Remove overburden above level at which the Engineer wishes to test.

4. Provide trench support and groundwater removal.

5. Backfill and re-compact material after testing is completed.

6. If compaction fails to meet specified requirements, perform remedial work by one of the following methods:

   a. Remove and replace backfill at proper density.

   b. Bring density up to specified level by other means acceptable to the Engineer.

   c. Redo trench backfill compaction demonstration and demonstrate compaction process achieves required results.

   d. Costs of retesting to confirm compliance: By the Contractor.

D. Frequency of trench backfill compaction confirmation testing:

1. Each test location: Perform tests for each type or class of backfill from bedding to finish grade, excluding controlled low strength material (CLSM)

2. Non-paved roadways: 1 test every 100 linear feet.

3. Crossing paved roadways: 2 tests at each crossing.

4. Inside road rights-of-way and paved plant areas:

   a. 1 test every 100 linear feet.

   b. As required by the Agency having jurisdiction over the right-of-way.

3.19 SCHEDULE

A. Construct pipeline using materials specified in the following schedule. Where options are provided, Contractor may select materials from the materials listed.

1. Bedding Zone:

   a. Structural Fill – 3/4 inch minus Dense Graded Aggregates as Defined in Section 02630-10 of the Oregon Standard Specifications for Construction

   b. Controlled Low Strength Material

2. Wet Trench:

   a. Subgrade Stabilization material wrapped with reinforcement geotextile

3. Embedment Zone:

   a. Structural Fill – 3/4 inch minus Dense Graded Aggregates as Defined in Section 02630-10 of the Oregon Standard Specifications for Construction.

   b. Controlled Low Strength Material

4. Trench Zone:

   a. Structural Fill – 3/4 inch minus Dense Graded Aggregates as Defined in Section 02630-10 of the Oregon Standard Specifications for Construction Controlled Low Strength Material

B. Structure Backfill:

1. Bedding:

   a. Structure Backfill Material - Open Graded Aggregate as defined in Section 2630.11 of the Oregon State Standard Specifications for Construction

2. Structure backfill:

   a. Structure Backfill Material - Open Graded Aggregate as defined in Section 2630.11 of the Oregon State Standard Specifications for Construction

END OF SECTION

SECTION 31 23 16.26

ROCK EXCAVATION

PART 1 - GENERAL

1.01 SECTION INCLUDES

A. Rock excavation exceeding the capability of conventional equipment.

B. Blasting requirements.

1.02 REFERENCED SECTIONS

A. The following Sections are referenced in this Section:

1. Section 01 33 00 – Submittals

2. Section 31 00 00 – Earthwork

3. Section 31 23 16.13– Trenching

1.03 DEFINITIONS

A. Rock Excavation.

1. General:

a. Removal of solid material which by actual demonstration cannot, in Owner's Representative's opinion, be reasonably removed using conventional excavation equipment and must be systematically broken by power-operated hammer, hydraulic rock breaker, expansive compounds, blasting, or other similar means prior to removal.

b. For excavation of solid material that cannot be removed using an excavator or tractor in good working condition having a minimum flywheel power of 220-mechanical horsepower (164 kilowatt) and equipped with manufacturer's standard boom, single tooth rock ripper, and rock points on a rock ripping bucket no wider than 36 inches, or similar approved equipment, will be considered rock for the purpose of payment.

2. Term "rock excavation" indicates removal of solid material, as specified above, and does not necessarily correspond to "rock" or "bedrock" as implied by names, geologic formations, or other definitions provided in the Oregon Standard Specifications for Construction or other documents outside of this specification.

1.04 SUBMITTALS

A. Submit the following shop drawings, plans and product information per Section 01 33 00:

1. Permits: The Contractor shall obtain all required local, State, Federal, and the utility owners' permits and shall submit to the Owner's Representative, a copy of all applicable permits for transportation, storage, and use of explosives.

2. At least 28 days prior to drilling any blast hole, the submit the resumes for the Owner's Representative's approval the resumes of the Contractor's Blasting

Consultant, Blasting Supervisors (Blasters-In-Charge), and personnel performing preconstruction blast surveys.

3. At least 28 days prior to drilling any blast holes, the submit a Project-specific General Blasting Plan to the Owner's Representative for review. The Contractor's Blasting Consultant shall visit the Site and prepare the Plan. The plan should include:

   a. A scaled plan drawing showing the approximate location and extent of the Contractor's blasting operations.

   b. A schedule of neighborhood pre-blast advisories, notifications and pre-blast structural surveys; a description of shot clearing and guarding procedures.

   c. A description of the anticipated road closures required during blasting operation,

   d. A tabulation of the nearest distances to structures within the specified blast generated seismic influence zone.

   e. A description of the drill and blast operation providing: the blast hole diameters and range of depths, the types of explosive to be used, the length of the stemming columns and the type of stemming material, the type of initiation system to be used, the methods used to control fly rock and sufficient information to determine the acceptability of the proposed blasting, and conformance with Paragraph 3.03.D, Blasting Limitations, hereinafter.

4. For each kind of blasting agents and explosives to be used, submit the perchlorate content provided by the suppliers and/or manufacturers. The Contractor has to obtain written permission from the Owner's Representative to use perchlorate-containing explosive products.

5. At least 14 days prior to drilling any blast holes the submit to the Owner's Representative manufacturer's product information sheets and Material Safety Data Sheets (MSDS) for all explosives, blasting agents, primers, and initiating products the Contractor proposes to use.

6. At least 24 hours before drilling any blast holes, the submit a Site-Specific Pre-blasting Blast Plan to the Owner's Representative for review and approval. The Pre-blasting Site-Specific Blast Plan shall include the following minimum information:

   a. A Site-specific plan view showing the blast area(s) and distances from the blast to all structures within 300 feet. The plan shall show the locations and distance to buried structures including buried utilities and pipelines within 100 feet of blast areas. Should the rock excavation require more than one blast, the plan shall show the anticipated footprint of each blast and the sequence in which the blasting will occur.

   b. A section view or profile of the blast area showing the top of ground, the rock/overburden contact and the bottom elevation limits of the excavation.

c. The maximum weight of explosives to be detonated in any discrete 8 millisecond incremental time period.

7. Review and approval of any blasting plan by the Owner's Representative shall not relieve the Contractor of their responsibility for obtaining adequate rock breakage and limiting rock breakage to within the design excavation final lines and grades.

8. Submit a Blast Report Form or approved equal to the Owner's Representative before 9 am the day following each blast. The report shall contain the information required in Paragraph 3.03.G, Blasting Records.

9. Pre-blast Survey: At least 7 days prior to loading blastholes, submit Pre-blast Inspection Report including the information described in Section 1.07.

1.05 REFERENCES

A. Oregon Occupational Safety and Health Code (OR-OSHA), Division 3 Construction, Subdivision U – "Blasting and Use of Explosives," Sections 1926.900 through 1926.914.

B. Oregon Revised Statutes for Explosives, 480.010 through 480.290 and Administrative rules 837-12-1200 through 837-12-1420. The rules are administered by Oregon's Office of State Fire Marshal and govern the sale, possession, transfer of explosives, and the required certificates.

C. Code of Federal Regulations (CFR): Bureau of Alcohol, Tobacco, and Firearms (ATF): 27 CFR 555.

D. National Fire Protection Association:

1. 495: Explosive Materials Code.

E. Blast Vibration Monitoring:

1. International Society of Explosive Engineers (ISEE), 2011, Blaster's Handbook, 18th edition, Appendix E, Seismograph Field Practice Guidelines.

1.06 QUALIFICATION OF BLASTING PERSONNEL

A. Provide the services of an independent, qualified Blasting Consultant, experienced in controlled and sinking cut blasting techniques for similar civil and hydraulic works, to prepare blasting plans, to supervise the installation of instruments, and to supervise the interpretation of recorded results. The Blasting Consultant shall have at least 10 years of experience and demonstrate satisfactory experience on 5 similar projects. These projects shall include blasting within 100 feet of occupied dwellings or utilities where good relations with owners of nearby private structures or utility and the public were maintained. The Blasting Consultant shall not be an employee of the Contractor, explosives manufacturer, or explosives distributor. The Owner's Representative shall review and approve or reject the Blasting Consultant.

B. Use experienced, competent Supervisors (Blasters-In-Charge) for all blasting operations. All blasting supervisors shall have at least 10 years of experience and be able to demonstrate satisfactory experience on at least 5 similar projects, including blasting within 100 feet of occupied dwellings or utilities. All blasters and blasting supervisors shall be properly qualified and licensed in accordance with applicable federal, state, and local

regulations. The Contractor shall not allow prohibited persons as defined by the BATF (27 CFR Part 555) to transport, handle, or use explosive materials.

C. Use experienced and qualified personnel for conducting pre-blast condition surveys. Personnel conducting pre-blast surveys shall have at least 5 years of experience in conducting pre-blast condition surveys of structures and be able to demonstrate satisfactory experience on at least 3 similar projects. Personnel conducting pre-blast surveys shall be the employees of a firm regularly engaged in conducting such surveys and shall not be an employee of the Contractor or any explosives manufacturer or distributor.

1.07 QUALITY CONTROL AND ASSURANCE

A. Pre-blast/Post-blast Inspections:

1. Coordinate all necessary notifications with utility owners of any utilities within 100 feet of the blast.

2. Prior to blasting, inspections shall be made of residences and other private structures existing within a 300-foot radius of all blasting locations. Notify the Owner's Representative at least 7 days prior to the inspections so a representative of the Owner's Representative may be present.

3. Inspections shall meet the following conditions: The survey shall include documentation of interior subgrade and above grade accessible walls, ceilings, floors, roof, and visible exterior as viewed from grade level. It shall detail by videotape or photographs and notes and sketches the existing condition or structures. Existing crack damage, other structural problems or defects occurring inside and outside the structure shall be documented as follows:

   a. The location of the feature shall be noted on a scaled drawing,

   b. Feature dimensions (e.g. width, length, depth) shall be measured and documented.

   c. Feature shall be photo-documented. A scale such as a ruler or crack meter shall be included in the photograph.

4. Develop a pre-blast inspection report, including videotapes and photographs, and shall be submitted to the Owner's Representative. Photographs shall be electronically imported and included in the report. Scans of photographs shall not be allowed.

5. As construction progresses, reinspect, as often as necessary to verify that controlled blasting methods are not causing any new damage.

6. In the event any property owner denies access for the survey of structures within the specified limits, notify such property owner by certified mail, on the intent of the survey. If after 2 weeks, access is still denied, notify the property owner once again that this is the final notification. Submit two copies of all such correspondence to the Owner's Representative. Upon review of the correspondence, the Owner's Representative may waive the inspection requirements for property owned by the owners refusing access.

7. Post blast inspections shall be required for property where written or verbal damage complaints were made by property owners.

B. Damage Repair

1. In case damage from blasting occurs to existing structures, to any portion of the Work, or to the material surrounding or supporting the same that is intended to remain, remove such damaged Work, repair the work, and replace the material and perform such Work for repair or replacement as the Owner's Representative deems necessary. Repair all damage promptly, completely, and satisfactorily, at the Contractor 's sole expense.

2. Nothing contained herein shall relieve the Contractor of their responsibility for claims arising from the Contractor's construction operations, including blasting operations. Failure to inspect any structure required by these Contract Documents, or inadequacy of inspections shall not relieve the Contractor of their responsibility. The Contractor shall indemnify the Owner and the Owner's Representative for such claims.

1.08 SAFETY REQUIREMENTS

A. Explosives shall be handled, transported, used, controlled, and monitored as prescribed by the most stringent of rules specified in the referenced OSHA and ATF Standards, Oregon's Office of State Fire Marshal explosives regulations, this Section, and local codes and ordinances.

B. Keep explosives on the Site only in such quantity as needed for Work under way and only during time as being used. No overnight magazine storage of explosives shall be allowed within the Project limits. Only the amount of explosives to be used each day shall be on the Site. Promptly remove from premises remaining unused explosives and explosive product packaging materials when need for explosives has ended. All loaded blast holes are to be shot the day they are loaded.

C. Conform to State, Federal, and municipal laws, ordinances, and regulations relating to transportation, handling, and use of explosives. If any of above-mentioned laws, ordinances, or regulations require a licensed blaster to perform or supervise the Work of blasting, employ a licensed blaster. Require them to have a license on Site and permit examination by Owner's Representative or other officials having jurisdiction.

D. Conduct operations involving explosives with all possible care to avoid injury to persons and property. Do blasting only with such quantities and strengths of explosives and in such manner as will break rock approximately to intended lines and grades, leaving rock not to be excavated in an unshattered condition. Avoid excessive cracking of rock upon or against which any structure will be built. Prevent injury to existing pipes, structures, and property above or below ground. Cover rock with logs or mats, or both. Give sufficient warning to persons in vicinity of Work before a charge is exploded.

E. Complete blasting within a distance of 50 feet (15 m) before any portion of a masonry structure is placed or any pipe is laid.

F. Determine presence of two-way-radios, stray electrical currents and other conditions adversely affecting blasting operations and implement necessary precautions to prevent accidents and premature blasts.

1.09 SITE CONDITIONS

A. Protect structures, underground utilities, and other construction from damaged caused by blasting.

B. Subsurface conditions at the wastewater treatment plant are described in the Geotechnical Data Report prepared for this Project – see Supplementary Information in Volume 3 of the Contract Documents. It is the responsibility of the Contractor and the Contractor's Blasting Consultant to review and understand the rock mass characteristics at the Site.

PART 2 - MATERIALS

2.01 EXPLOSIVE PRODUCTS

A. To the extent practical, avoid the use of perchlorate-containing explosive products when surface or groundwater can be affected.

2.02 WARNING SYSTEMS

A. Institute a system of audible signals to warn of impending blasts.

B. Erect signboards of adequate size stating that blasting operations are taking place in the area. Such signs shall be clearly visible at all points of access to the area and shall clearly describe the audible signal system for warning of impending blasts.

C. Mark all day storage places and explosives transport vehicles with signs stating clearly and boldly, DANGEROUS EXPLOSIVES.

2.03 BLAST MONITORING INSTRUMENTATION

A. The Contractor with the assistance of the Contractor's Blasting Consultant shall provide and operate a minimum of three blast monitoring seismographs, at locations shown on the Drawings, to record particle velocity simultaneously along three mutually perpendicular axes.

B. Provide and operate a minimum of two approved air blast overpressure/sound monitoring devices at locations as directed by the Owner's Representative.

C. Blast monitoring instrumentation shall be 4-channel, (1 overpressure and 3 seismic channels) units capable of digitally storing collected data. Equipment shall be capable of printing ground motion time histories and summaries of peak motion intensities, frequencies, and USBM RI8507 ppv-frequency plots. Printed report records shall include date, time of recording, operator name, instrument-number, and date of last calibration. Instruments shall have a flat frequency response between 2 and 250 hertz (Hz) for particle velocity and from 2 to 200 Hz for air pressure.

D. Seismographs shall be capable of recording overpressure from 88 to 148 decibels (dBL), and a particle velocity from 0.005 to 10.0 ips, and shall be capable of performing a self-test of velocity transducers and printed event record shall indicate whether or not the sensor test was successful.

E. Blast monitoring equipment shall have been calibrated within 1 year of any blast monitoring.

F. Blast vibration monitoring shall be performed in general agreement with the 18th edition of the Blaster's Handbook, Appendix E, Seismograph Field Practice Guidelines, published by the International Society of Explosive Engineers (ISEE), 2011.

2.04 BLASTING MATS

A. Blasting mats shall weigh at least 25 pounds per square foot. Mats shall be a minimum of 6 feet by 10 feet and shall be equipped with suitable placement attachments.

PART 3 - EXECUTION

3.01 ROCK EXCAVATION

A. Conduct excavation in accordance with Section 31 00 00 or Section 31 26 16.13.

B. If material is encountered that cannot be excavated by conventional equipment, notify Engineer immediately. Provide performance tests of the specified conventional or equivalent equipment demonstrating the equipment can perform to at least the level specified. If Engineer confirms in writing that the specified conventional equipment cannot perform at the production rates specified, the excavation shall be considered rock excavation.

C. A boulder may be considered rock excavation if, after the boulder has been exposed by excavation on all sides, neither type of conventional equipment can break up the boulder into pieces sufficiently small to enable removal by the specified equipment.

3.02 MEASUREMENT AND PAYMENT

A. Payment for rock excavation will be as provided in the Bid form as a unit price item for quantities in excess of the base bid quantity included in Contractor's lump sum bid. Payment for additional rock excavation shall be at the additive or deductive unit prices provided on the Bid Form.

B. Measurement and Payment

1. Measurement of quantities for payment of rock excavation shall be by calculation by Engineer of the volume of in-place materials removed as rock excavation. No compensation will be made for removal of materials beyond the limits of the rock excavation in the project drawings or ordered by Engineer or for materials which may come into the excavation from outside the designated limits. No compensation will be made for excavation wider or deeper than the minimum indicated.

2. Payment for rock excavation will be made by the cubic yard unless otherwise indicated. The payment shall include full compensation for furnishing all labor, materials, tools, equipment, and incidentals, and for doing all the work involved in excavating and backfilling the excavation completely, subgrade elevation indicated. Payment shall also include full compensation for the removal and disposal of the excavated materials, control of water in the excavation, excavation support, performance tests, costs associated with interruption of construction operations during performance tests and confirmation by Engineer, costs associated with the additional time required for excavation, and all other costs and operations required for, or as a result of, rock excavation.

3.03 EXPLOSIVES AND BLASTING

A. General

1. Conduct blasting, storage and handling of explosives in accordance with the Oregon Occupational Safety and Health Division (Oregon OSHA), Oregon Administrative Rules, Chapter 437, Division 3 Construction, Subdivision U, and Section 00335 of the Oregon Standard Specifications for Construction and any other authorities having jurisdiction.

2. Obtain all necessary permits and furnish copies to Engineer before explosives are transported to the Site.

3. Pay for permits at no additional cost to Owner.

4. Perform blasting only by skilled operators under the direction of a licensed blasting supervisor.

5. Submit blasting plan prepared by qualified person. Blasting plan to include

   a. Details of drilling and blasting pattern

   b. Vibration, flyrock and noise reduction methods

   c. Blast area security measures

   d. Traffic control

6. Identify all property, structures, and persons that may be affected by blasting and take all safety precautions and protective measures to prevent damage or injury to same.

7. All personal injury or damage to persons or property of any nature, whether in the Work or appurtenant to it, shall be the responsibility of Contractor.

8. Contractor agrees by submission of a bid to indemnify and hold Owner, its officers, agents, employees, and Engineer harmless from any and all liability claims, costs, and expenses as a result of blasting operations, including expenses of investigation and defending against same in regard thereto.

9. Perform basting only between 9:00 AM and 4:00 PM, Monday through Friday, except legal holidays, unless otherwise approved by Engineer and regulatory agencies having jurisdiction.

B. Blasting

1. Perform instrumented seismographic monitoring of blasting.

   a. Place a seismograph at the nearest structure to the blast to monitor the ground motion particle velocity and frequency during each blast.

   b. Provide one copy of each seismograph chart to Engineer.

   c. If blast results in unacceptable vibrations modify the blasting procedure.

2. Contain fly rock from blasting within the project site and prevent hazard to persons, vehicles, existing improvements, or vegetation.

3. Clean the blasting site of all debris at the end of each day.

4. Do not blast within 100 feet of concrete that has cured less than 7 days.

C. Blasting Limitations

1. The following limitations are mandatory for all blasting operations:

2. Road Closure Limitations:

   a. Road closures are required during blasting all blasts. Submit any anticipated road closures in the General Blasting Plan, per Paragraph 1.04 of tis Section. Traffic control for the road closures shall be in accordance with the most recent ODOT Traffic Control Plan Design Manual.

3. Work Hour Restrictions

   a. Blasting shall be performed between XX am and XX pm. No nighttime blasting shall be allowed.

D. Blasting Safeguards

1. The maximum charge weight per 8 millisecond (MS) delay shall be in accordance with the Scale Distance Formula, $W= (D/Sd)^2$, where W = weight of explosives per 8 MS delay, D = distance in feet to structure, Sd = selected scaled distance from test blasting, unless otherwise specified by the Owner's Representative.

2. The maximum charge weight per 8 millisecond delay (MS) delay shall be approximated by the use of the following equation, which shall be refined based on test blasts and experience gained as the Work progresses: $W = D^2 * (V/H)^{1.25}$, where W = maximum weight of explosives per delay period of 8 MS, in pounds, V = peak particle velocity, in inches per second, D = shortest distance between blast and the point of interest in feet and H = ground response factor, which equals 70 (unit-less) and shall be verified by test blasting, unless otherwise specified by the Owner's Representative.

3. The first blasting operation at each location shall be monitored by the Contractor as a test case, and the proper drill and blast parameters subsequently used shall be derived from the test results. The Scaled Distance for test shots shall be based on the Contractor's General Blasting Plan and such that the peak particle velocity at the nearest residence, private, public, community, or institutional building does not exceed 2.0 inches per second, or as directed by the Owner's Representative. Blast monitoring shall be continued for every blast round. Blast monitoring data recorded for each shot shall be furnished to the Owner's Representative prior to drilling for the next blast. Changes in drilling patterns and amount of explosives shall be made when records indicate vibration in excess of that specified herein.

4. If the measured air overpressure exceeds 0.014 psi (133 dB) at the nearest occupied dwelling adjacent to the blast zone or other designated location, the Owner's Representative may require up to a 3-day shutdown of Contractor's operations for inspection of facilities. This delay shall be at no additional cost to the Owner and shall not constitute the basis for any claim.

5. If for any blast, the measured peak particle velocity or airblast exceeds the limits in this specification, the Contractor's Blasting Specialist shall review the Contractor's blasting methods and the Contractor shall submit a revised Blasting

Plan for the Owner's Representative's approval to conducting additional blasting activities.

6. In reporting a shot, the distance from the shot to each recorder, the amount of explosives used in each delay, the total amount of explosives used, and the time shall be noted. No separate or direct payment shall be made for monitoring of blasts, as all costs shall be considered incidental to, and included in, the applicable items of the Contract.

7. Cover the area to be shot with blasting mats or other approved type of protective material that will prevent the scattering of rock or other fragments. Give ample warning to all persons within the vicinity prior to blasting and provide signals warning of danger in suitable places to alert people in vehicles before firing any blasts. If flyrock projects past the guarded area of the shot or lands on private property, all blasting operations shall cease until the Contractor's Blasting Consultant reviews the Site and determines the cause of the flyrock and submits a revised shot plan for the Owner's Representative's approval.

8. After a blast has been fired, the blaster shall make a careful inspection to determine that all charges have exploded before employees are allowed to return to the operation. Misfires shall be corrected in accordance with the requirements of the applicable portions of Federal, State, and/or local safety codes for blasting. The Contractor shall be responsible for any and all damages to property or injury to persons resulting from blasting, or accidental or premature explosions that may occur in connection with the use of explosives.

9. All loose and shattered rock or other loose material, which may endanger any structure or the workers, shall be removed and the excavation made safe before proceeding with the Work. After muck removal and before drilling of blast holes for a new round, the face shall be cleaned and thoroughly examined for missed holes and unexploded powder. Blasting techniques shall be developed and improved as Work progresses. The fact that the removal of loose or shattered rock or other loose material may enlarge the excavation beyond the required limits shall not relieve the Contractor of the responsibility for removal of such material.

10. Whenever, in the opinion of the Owner's Representative, proposed blasting may cause harm to persons or private property, cause damage to structures, or create rock face instability, cease blasting immediately and review the blast design. The Contractor can resume excavation of the rock after redesigned blast plan has been approved by the Owner's Representative or by mechanical methods.

E. Blasting Test Shots

1. The Contractor shall demonstrate that the proposed blasting method meets the Project objective to the Owner's Representative by making test shots.

2. Test shots may form final rock faces upon approval of the Owner's Representative.

3. The first sinking cut shot in the shaft shall be a test blast.

4. The Contractor's Blasting Consultant shall be present to witness each test blast.

5. The Owner's Representative shall be the sole judge as to the acceptability of the proposed method. If the test is unacceptable, the Contractor, with the assistance of the Blasting Consultant, shall modify their proposed blasting method and perform additional tests until the method is acceptable.

F. Blasting Records

1. Complete the Blast Report Form for each blast detonated, and be submit to the Owner's Representative along with a Blasting Ground Motion Record (seismograph and airblast record) before 9 AM of the following day after each blast. This record shall include the following:

   a. Depth of blast holes and the location of the blast point in relation to Project stationing; type and strength of explosives, type of blasting caps, and distribution of delays used; vibration record including USBM RI8507 ppv-frequency plot; total explosive loadings per round and per delay; comments by the blaster in charge regarding any misfires, unusual results or unusual effects; date and initiation time of blast; name and signature of the Blaster-in-Charge and any other records required by State, Federal, and local codes and/or regulations.

   b. Failure to submit the Blast Report Form shall be grounds for the Owner's Representative to suspend the Contractor's drilling and blasting operations until the required reports have been submitted.

G. Post-Blast Investigation and Report

1. Perform post-blast inspections of each structure included in the pre-blast survey.

2. Perform post-blast inspections with a qualified independent inspector provided by the Contractor.

3. Use pre-blast survey forms for each structure to indicate no damage has occurred as a result of the blasting operation, sign forms following inspection, and submit one copy to the Owner.

4. Where damage has occurred, investigate the damage and provide a written report to Engineer within 30 days of identification of the damage or receipt of the complaint.

END OF SECTION

(THIS PAGE LEFT BLANK INTENTIONALLY)

SECTION 31 23 19

DEWATERING

PART 1 - GENERAL

1.01 SECTION INCLUDES

A. Control of water and dewatering of trench and structure excavations.

1.02 RESPONSIBILITY FOR DESIGN

A. Assume responsibility for planning, design, installation and operation of temporary groundwater dewatering systems and temporary surface water control systems. Water control systems designed and installed by the Contractor shall adequately protect existing property, foundations and permanent structures.

B. Utilize the services of a Registered Hydrogeologist, Professional Civil Engineer, or Certified Engineering Geologist to develop the Groundwater Control Plan (GWCP) and the design of the groundwater and surface water control systems to achieve specified results. Professional registration shall be for the State of Oregon.

C. Assume sole responsibility for loss or damage resulting from partial or complete failure of operation of dewatering systems.

D. Assume responsibility for repairing damage to adjacent properties, buildings, structures, utilities and other work due to settlement or resultant damage caused by the groundwater control operations.

E. Determine means and methods for disposing of water removed by dewatering systems. If permit requirements specify water quality requirements that must be met before water can be disposed, provide the necessary treatment facilities to achieve the specified water quality limits

F. Modify groundwater control systems or operations if they cause or threaten to cause damage to new construction, existing site improvements, adjacent property, or adjacent water wells, or affect potentially contaminated areas.

G. When additional information is needed for design of dewatering systems, conduct subsurface investigations to identify groundwater conditions and to provide parameters for design, installation, and operation of groundwater control systems

1.03 RESPONSIBILITY FOR SECURING PERMITS

A. Obtain all necessary permits, including those required by Oregon Water Resources Department (OWRD) for dewatering wells and monitoring wells, a 1200-C Storm Water Discharge General Permit from the Oregon Department of Environmental Quality (DEQ) for discharge of groundwater, and those required by the City of Sweet Home for discharge to the local sewer system.

B. Pay all costs associated with permitting, decommissioning and removal of all dewatering systems when no longer in use.

C. Comply with the sampling, testing, monitoring, and reporting requirements specified in permits secured for dewatering operations.

1.04 PERFORMANCE REQUIREMENTS

A. General

1. Groundwater control systems may include single-stage or multiple-stage well point systems, sump pumps within excavations, shallow or deep wells, or combinations of these types of dewatering systems.

2. Locate groundwater control and drainage systems so as not to interfere with utilities, construction operations, vehicular traffic, adjacent properties, or adjacent water wells.

3. Modify dewatering procedures which cause, or threaten to cause, damage to new or existing facilities, so as to prevent further damage. Install settlement gauges, as necessary, to monitor settlement of critical structures or facilities adjacent to areas of dewatering. Control the rate of dewatering to avoid all objectionable settlement and subsidence.

4. Install piezometers to monitor groundwater in the area of the excavation, as well as the natural groundwater elevation. Install piezometers in the locations specified elsewhere in this Section.

5. Remove or abandon dewatering system when it is no longer needed in accordance with regulatory stipulations indicated in this Section.

B. Project Conditions

1. Anticipate encountering groundwater in all excavations.

2. Groundwater may be free-flowing into excavations or may be encountered in the form of saturated soil.

C. Requirements for Dewatering of Excavations:

1. Design dewatering systems of sufficient scope, size, and capacity to accomplish the following results:

a. Control the flow of surface water into trench and structure excavations by grading, dikes, or other means.

b. Lower groundwater levels and eliminate infiltration of groundwater into trench and structure excavations, allowing construction to proceed on dry, stable subgrade.

c. Lower and maintain groundwater below the lowest point of excavations.

d. Lower groundwater levels further when necessary to prevent flotation and damage from hydrostatic pressure and to obtain the specified degree of compaction. Develop substantially dry and stable subgrade for subsequent earthwork compaction and construction operations.

e. Prevent the loss of fines, seepage, boils, quick conditions, or softening of the foundation soils.

f. Maintain stability of sides and bottoms of excavations.

D. Requirements for Protection of Existing Structures

1. Provide, operate and maintain dewatering systems of sufficient size and capacity to protect existing structures from hydrostatic uplift when the structure is drained of water.

2. Protection against hydrostatic uplift entails lowering the groundwater table in the immediate vicinity of the structure to be drained until the groundwater elevation is at least 12 inches below the top of slab elevation of the structure.

E. Operation of Dewatering Systems

1. Maintain dewatering operations to control and minimize erosion, to create stable sides and bottoms of excavations, to stabilize constructed slopes and to prevent settlement and damage to structures and utilities.

2. Collect and dispose of removed water. Water removed by dewatering systems cannot be discharged into the storm water collection system which consists of pipes, catch basins, manholes and roadside drainage ditches. Discharge water to wastewater treatment plant. Coordinate discharge location, quality and quantities with City prior to discharge.

1.05 ENVIRONMENTAL REQUIREMENTS

A. Comply with requirements of agencies having jurisdiction.

B. Comply with all laws and regulations for development, drilling, and abandonment of wells used in dewatering systems.

C. Obtain a 1200-C Storm Water Discharge General Permit from the Oregon Department of Environmental Quality (DEQ) under the National Pollutant Discharge Elimination System (NPDES) for discharge of collected groundwater from the construction site.

D. Obtain all necessary permits from agencies with regulatory jurisdiction over groundwater pumping, matters affecting well installation and the use of existing storm drains and natural water drainage courses.

E. Take early action and allow time for the review, as permitting processes may be lengthy. Take early action to pursue and submit for the required approvals.

1.06 SUBMITTALS

A. Notify the Owner's Representative immediately after any material change or proposed change in the character, volume, treatment or disposal methods of the discharge.

B. Additional Shop Drawings for Specific Locations

1. Submit design details of dewatering systems and water treatment systems that will be utilized at the specific locations listed herein.

2. Design of the dewatering system shall be prepared by a Registered Hydrogeologist, Professional Civil Engineer, or Certified Engineering Geologist registered in the state of Oregon and shall be coordinated with the design of the excavation support systems that the Contractor proposes to use at these locations.

3. Provide shop drawings that are signed and sealed by the responsible Engineer or Certified Professional licensed in Oregon.

4. Illustrate the arrangement, locations and details of the dewatering system, including wells and well points; dewatering pumps and piezometers; locations of headers, treatment systems and discharge lines; standby equipment and power supply; silt removal, pollution control and treatment facilities; and the means of conveyance, discharge and disposal of water.

5. Include a narrative report outlining the dewatering procedures and controls.

6. Submit a minimum of six weeks before any work referred to in the submittal is scheduled to commence.

C. Groundwater Control Plan (GWCP)

1. Proposed plan for the design, control, transport, treatment, operation, disposal of water, signed and sealed by the designer. Include with this proposed plan a drawing that indicates the number and location of the dewatering wells to be installed for the Work.

2. Include the following in the GWCP:

a. Calculations for the design of each system, including a statement of design assumptions, system description, and basic design criteria. Quantify the peak discharge rate of each system into receiving storm water and sanitary sewers.

b. Schedule and procedures for installation, start-up testing protocol, and removal of each system.

c. Location, dimensions, and capacity of wells, retention basins, treatment ponds, tanks, and treatment plants.

d. Sizes, locations, and types of discharge lines, ditches, sumps, and flow measurement devices.

e. Details of dewatering systems for shafts, including well sizes, locations, gradation of filter materials, and calculations for compatibility with screen and ground.

f. Types, capacities and numbers of pumps, generators, and standby units.

g. Design and construction of all electrical installations.

h. Details for the collection of water in tunnel and shafts, its conveyance to the treatment point, its treatment of the water, and its discharge from the site.

i. Methods of measuring the flows in accordance with the requirements specified herein.

j. List of substances that may be introduced into discharges or increased in concentration due to the Contractor's means and methods of performing the Work.

k. Methods of monitoring groundwater level and water quality to check its compliance with all regulatory requirements prior to its discharge from the site.

l. Methods for diverting or collecting, monitoring, and treating as necessary prior to discharge all storm water.

m. Methods for collecting, handling, treating and disposing of water and byproducts from excavated materials stockpiled on site.

n. Copy of approved permits (i.e. discharge permits).

o. Copies of all daily reports specified herein.

3. Timing: Submit GWCP within 21 calendar days of the Notice to Proceed.

1.07 QUALITY CONTROL

A. Qualifications:

1. Name, address, phone number and professional registration of the designer of the dewatering systems.

2. Company and individuals responsible for the operation of the facilities.

3. Independent testing laboratory responsible for testing treated effluent will be arranged for and provided by the City.

B. Certifications: Permit for discharge into local storm water and sewer systems.

C. Quality Control Plans

1. Method for assuring that water quality complies with regulatory requirements prior to its discharge from the site.

2. Methods demonstrating the ability of the automatic paging facilities, power transfer facilities, and backup systems to comply with specified requirements.

3. Methods for assuring that collection, handling, treatment, and discharge operations do not damage the Work in progress or impact the efficiency with which other Work is performed.

4. Calculations demonstrating capacity of system to store collected water on site to comply with permit restrictions for discharging.

5. Recordkeeping: Flow, water quality, and amount and type of treatment chemicals used on a cumulative basis. Provide daily, no later than 8 hours after records were taken.

D. Shop drawings of the dewatering system must be approved prior to beginning excavations.

1.08 QUALITY ASSURANCE

A. Reference Standards: Except as otherwise indicated the current editions of the following specifications and standards apply to the Work of this Section:

1. Oregon Administrative Regulations (OAR):

a. OAR 690-200, Well Construction and Maintenance.

b. OAR 60-210, Abandonment of Wells.

c. OAR 690-240 Construction, Maintenance, Alteration, Conversion and Abandonment of Monitoring Wells Geotechnical Wells, and Other Holes in Oregon.

2. Environmental Protection Agency (EPA)

   a. 40 CFR 136 - Guidelines Establishing Test Procedures for the Analysis of Pollutants.

   b. 40 CFR 261 - Identification and Listing of Hazardous Waste.

   c. 40 CFR 403 - General Pretreatment Regulations for Existing and New Sources of Pollution.

3. Qualifications:

   a. Designer of GWCP: Registered Hydrogeologist, Professional Civil Engineer, or Certified Engineering Geologist registered in the State of Oregon with a minimum of five years experience in the design, including monitoring and recording, of water collection, handling, and treatment systems similar to those required under this Contract.

   b. Installer and Operator:

      1) Company with at least five years experience in responsible charge of the installation and operation of water collection, handling, and treatment systems similar to those required for this project.

      2) Personnel operating and maintaining facilities with demonstrated experience in the operation of systems similar to those required for this project.

4. Preconstruction Meeting: Prior to beginning excavation, complete installation of the water treatment facility and arrange for a demonstration and test of all features, including automatic paging facilities, power transfer facilities and backup systems.

PART 2 - PRODUCTS

2.01 MATERIALS AND EQUIPMENT

A. Furnish and maintain all materials, tools, equipment, facilities, and services as required for providing the necessary dewatering work and facilities.

B. Materials for Groundwater Extraction Wells and Groundwater Monitoring Wells:

   1. Well Casing: Schedule 40 PVC or steel pipe. Size to be determined by Contractor, 8-inch minimum.

   2. Groundwater Monitoring Well Casing: 2-inch diameter PVC pipe with 20 foot section of slotted screen.

   3. Sand Pack: 10-20 silica sand.

   4. Pump Size, Capacity, and Type (Extraction Wells): As selected by Contractor.

   5. Provide locking security cap on top of well casing.

C. Collection and Discharge Pipes: Steel or PVC pipe and fittings.

D. Water Quality Treatment Equipment: Provide settling tanks with sufficient capacity for the flow rate and volume of water. Include chemical flocculation and filtration equipment as necessary to comply with water quality limits.

2.02 DEWATERING AND WATER CONTROL EQUIPMENT

A. Select equipment and materials necessary to achieve desired results for dewatering.

B. Use equipment that is in good repair and operating order.

C. Maintain sufficient standby equipment and materials available at the site to ensure continuous operation, where required.

2.03 GEOTEXTILE CONTAINMENT TUBES

A. Contractor may utilize a pervious geotextile containment tube for capturing and removing sediment from water collected during dewatering operations.

B. Tube Construction: Fabricated from woven, mono-filament or multi-filament pervious sheets of geotextile material and provided with filling ports and a pressure relief port.

C. Manufacturers: One of the following or equal:

1. Geocontainer, as manufactured by Ten Cate Nicolon.

2. Geotube, as manufactured by Texion Geosynthetics.

PART 3 - EXECUTION

3.01 NPDES PERMIT COMPLIANCE

A. Implement the Groundwater Control Plan as approved by the Oregon DEQ before beginning excavation.

B. Comply with all limitations and controls for water discharges, monitoring requirements and other special conditions specified in the permit.

3.02 MONITORING GROUNDWATER

A. Groundwater Monitoring Wells:

1. Install a minimum of three (3) groundwater monitoring wells for monitoring groundwater elevation upgradient and downgradient at each dewatering system location on the project site.

2. Measure and record groundwater elevation two times per week during the course of dewatering to lower the groundwater table.

3. When groundwater monitoring wells are no longer needed for monitoring ground water levels, abandon groundwater monitoring wells in accordance with Applicable laws and regulations.

B. Installation of Monitoring Devices

1. Construct well in accordance with the requirements of ASTM D5092, Standard Practice for Design and Installation of Groundwater Monitoring Wells.

2. Depth of Drilled Hole: Minimum 10 feet below required elevation of groundwater drawdown, or to the depth of bedrock.

3. Construction Methodology: Install monitoring wells using methods that do not use drilling mud.

3.03 DEWATERING

A. Perform dewatering in accordance with approved Shop Drawings. Keep the Owner's Representative advised of any changes made to accommodate field conditions and, on completion of the dewatering system installation, revise and resubmit Shop Drawings as necessary to indicate the installed configuration.

B. Organize dewatering operations to lower the groundwater level in excavations as required for prosecution of the Work, and to provide a stable, dry subgrade for the prosecution of construction operations.

C. Design, install and operate the dewatering systems so that fines are not removed from native subgrade and surrounding soils during dewatering.

D. Maintain water level at lower elevations, so that no danger to structures can occur because of buildup of excessive hydrostatic pressure, and provide for maintaining the water level below the subgrade, unless otherwise permitted by the Owner's Representative.

E. Maintain groundwater level a minimum of five feet below the prevailing level of backfill being placed.

F. Dispose of water in such a manner as to cause no injury or nuisance to public or private property, or be a menace to the public health. Dispose of the water in accordance with applicable regulatory agency requirements.

G. Dewatering of Pipe Trenches: Do not drain trench water through the pipeline under construction.

H. Maintain continuous dewatering operations so that the excavated areas are kept free from water during construction, while concrete is setting and achieves full strength, and until backfill has been placed to a sufficient height to anchor the work against possible flotation.

I. Prevent disposal of sediments to adjacent lands or waterways by employing necessary methods, including settling basins. Locate settling basins away from watercourses to prevent silt-bearing water from reaching the watercourse.

J. Where excavations may obstruct the natural flow of a watercourse, implement measures to control and dispose of the surface water that will not adversely affect water quality or beneficial uses of the watercourse. Divert watercourse flows around excavation areas by constructing barriers, temporary culverts, new channels or other appropriate means.

K. Do not allow water containing mud, silt or other pollutants from aggregate washing or other construction activities to enter a watercourse or be placed in locations that may be subjected to high storm flows.

3.04 SURFACE WATER CONTROL

A. Intercept surface water and divert it away from excavations through use of dikes, ditches, curb walls, pipes, sumps or other means. This requirement extends to temporary works required to protect adjoining properties from surface drainage caused by construction operations.

B. Implement the appropriate level of surface water control to protect water quality throughout the construction period.

C. Utilize Best Management Practices throughout the construction period.

3.05 GROUNDWATER CONTROL

A. Provide labor, material, equipment, techniques and methods to lower, control and handle groundwater in a manner compatible with construction methods and site conditions. Monitor effectiveness of the installed system and its effect on adjacent property.

B. Intercept water flowing into excavations and divert it to sumps or ditches to allow pumping of collected water out of the excavation.

C. Provide settling basins, geotextile containment devices or other sediment removal and water treatment devices for water quality control and compliance with regulatory and permit requirements.

1. Install geotextile containment devices in accordance with the manufacturer's instructions and requirements.

D. Operate and maintain groundwater control systems in accordance with the Groundwater Control Plan. Notify Engineer in writing of any changes made to accommodate field conditions and changes to the Work.

E. Provide for continuous system operation, including nights, weekends, and holidays. When deemed appropriate, provide backup power source for electrical service.

F. Monitor operations to verify that the system lowers groundwater levels at a rate required to maintain a dry excavation resulting in a stable subgrade for prosecution of subsequent operations.

G. Remove all groundwater control systems upon completion of construction or when dewatering and control of surface or groundwater is no longer required. Remove and grout piezometers when groundwater control operations are complete.

3.06 WELL ABANDONMENT

A. Abandon wells using a licensed water well contractor in accordance with OAR 690-220.

B. Include well abandonment costs, including permits and documentation, in the Lump Sum Price.

3.07 RECORDS

A. Provide a daily record of the average flow rate. Provide results of water quality testing as required by the Permit for discharge.

B. Observe and record the elevation of the groundwater during the period that the dewatering system is in operation.

END OF SECTION

(THIS PAGE LEFT BLANK INTENTIONALLY)

SECTION 31 23 23.33

CONTROLLED LOW STRENGTH MATERIAL

PART 1 - **GENERAL**

1.01 SECTION INCLUDES

A. Requirements for controlled low strength material (CLSM) as backfill material in specific locations.

1.02 REFERENCED SECTIONS

A. The following Section is referenced in this Section:

1. Section 01 33 00 – Submittals

1.03 DEFINITION

A. Controlled low strength material (CLSM): A highly flowable, lean concrete mix consisting of a mixture of cement, fly ash, densely graded mineral aggregates, water and admixtures. Characteristics include:

1. Capable of freely flowing to fill excavations and voids without compaction or other additional effort.

2. Used in trenches and for backfill adjacent to structures where clearance is limited, and in other areas specifically identified on the Drawings or specified.

3. Low permeability to prevent migration of adjacent fines into the set mix.

4. Easily excavated after curing with minimum risk of damage to buried utility.

1.04 SUBMITTALS

A. Comply with Section 01 33 00.

B. Mix Design: Identify name and/or number of the mix design and proposed use. Provide the proportions and gradations of materials proposed for CLSM.

C. Certified test results for compressive strength.

1.05 QUALITY ASSURANCE

A. Demonstrate that the CLSM mix meets the specified requirements, including compressive strength.

B. Enlist the services of a testing laboratory to prepare test cylinders and to transport cylinders to the laboratory for testing.

C. Testing expenses shall be borne by the Contractor.

D. Test Cylinders

1. Procedure: Make 6-inch diameter by 12-inch high test cylinders in accordance with ASTMD4832.

2. Required Number: Not less than 3 cylinders for each 200 cubic yards of CLSM placed, with a minimum of 3 cylinders for each location where CLSM is used.

3. Test two cylinders at 28 days, third cylinder is spare.

E. Field Testing:

1. Test flow consistency per ASTM D6103.

2. Test flow consistency once every 200 cubic yards of CLSM placed.

PART 2 - **PRODUCTS**

2.01 GENERAL

A. CLSM Mix: A mixture of Portland cement, fly ash, aggregate, water, and admixtures that produce a material of controlled density and of low compressive strength capable of filling all spaces between the pipe, the bedding and the trench walls.

2.02 MATERIALS

A. Cement: Conforming to ASTM C150, Type II or III with total alkali content not more than 0.8 percent.

B. Water: Clean, potable water.

C. Fly Ash

1. Mix Designs used for Pipe Bedding and Trench Backfill: Class F in conformance with ASTM C618.

2. Mix Designs used for Backfill of Excavations: Class F in conformance with ASTM C618.

D. Aggregate Materials

1. Densely graded rock conforming to the following gradation:

Sieve Size	Percentage Passing
1”	100
No. 8	50-100
No. 200	0-5

2.03 DESIGN REQUIREMENTS

A. Water-cement Ratio: Not to exceed 3.5.

B. Minimum Cement Content: 50 pounds per cubic yard.

C. Use fly ash to improve flow-ability of the fresh CLSM and to regulate the strength. Do not use more than 300 pounds per cubic yard.

D. Unit Weight Requirements

1. Density of CLSM when used as backfill of excavations: Between 100 pounds per cubic foot and 130 pounds per cubic foot in the as-placed condition as determined by ASTM D6023.

E. Compressive Strength Requirements

1. Mix Designs used for Pipe Bedding and Trench Backfill: Compressive strength at 28 days between 100 psi and 150 psi as determined in accordance with ASTM D4832.

2. Mix Designs used for Backfill of Excavations: Compressive strength at 28 days between 150 and 300 psi as determined in accordance with ASTM C4832.

3. Mix Designs used for Excavation Support and Protection: Compressive strength at 28 days 1,500 psi or greater.

2.04 CONSISTENCY AND MIXING

A. Consistency: Similar to that of a thick liquid so that it flows readily and fills spaces and voids around pipes and structures.

B. Slump: Between 6 inches and 8 inches when tested in accordance with ASTM C143.

C. Uniform consistency and appearance.

D. Mixing Method and Time: As required to produce a uniform mixture of cement, fly ash, aggregate, admixtures, and water.

2.05 MEASUREMENT OF MATERIALS

A. Use weighing equipment to determine the amount of cement, fly ash, and aggregate entering into each batch. Where batches are proportioned to contain an integral number of conventional sacks of cement, and the cement is delivered at the mixer in the original unbroken sacks, the weight of the cement contained in each sack may be taken without weighing as 94 lbs.

B. Use a suitable water meter or other acceptable method of measuring the quantity of water entering the mixer.

PART 3 - **EXECUTION**

3.01 PLACEMENT

A. Thoroughly settle and consolidate CLSM as the material is placed in excavations. Fill the entire depth of the layer that is being consolidated, into a dense, homogeneous mass, filling all spaces and voids and bringing only a slight excess of water to the exposed surface. Place and consolidate CLSM by means that will not cause segregation of the mix.

B. Do not place CLSM under the following conditions:

1. When the air temperature is below 40 degrees Fahrenheit.

2. When the excavation contains water or when the bottom or walls of the excavation are frozen or contain frozen material.

C. Prevent flotation of pipes by placing CLSM in two or more lifts, with each lift reaching an initial set before the succeeding lift is placed. Correct any flotation and displacement of pipelines.

D. Placement of CLSM in Excavations: Limit lift thickness to 10 feet, place subsequent lifts after CLSM has achieved the minimum specified compressive strength.

3.02 PROTECTION OF CLSM

A. Protect CLSM from equipment, traffic and backfilling operations until the surface has achieved an initial set and has hardened enough to develop a minimum penetration number of 650 when tested in accordance with ASTM C403.

B. If the trench backfill is not to be placed over the CLSM within eight hours after CLSM placement, place a 6-inch layer of moist backfill over the CLSM.

END OF SECTION

SECTION 31 50 00

EXCAVATION SUPPORT AND PROTECTION

PART 1 - GENERAL

1.01 SECTION INCLUDES

A. Temporary excavation support systems.

1.02 REFERENCED SECTIONS

A. The following Sections are referenced in this Section

1. Section 01 33 00 – Submittals
2. Section 31 23 23.33– Controlled Low Strength Material
3. Section 31 00 00 – Earthwork
4. Section 03 60 00 – Grout

1.03 DEFINITIONS

A. Protection Systems:

1. Sloping or benching systems for excavated slopes.
2. Structural support systems, shield systems, and other systems for preventing excavation wall failure.

1.04 SUBMITTALS

A. Prepare and submit in accordance with Section 01 33 00.

B. Submit information as a complete package. Include all items required by the Contract Documents. Incomplete submittals will not be reviewed and will be returned for resubmittal as a complete package.

C. Shop Drawings

1. Prepared, signed, and sealed by a professional engineer who is registered to practice in the state of Oregon.
2. Clearly indicate structural sections of shoring members, welding details, bolting details, and bracing details.
3. Indicate existing and new structures, pipelines and other improvements located in the vicinity and impacting the design of the shoring system.
4. Provide details for bracing, reinforcement and sealing around penetrations.

D. Calculations: Structural calculations verifying and demonstrating the structural safety and adequacy of the sheeting, shoring, and bracing to be used.

1. Prepared, signed, and sealed by a registered Professional Civil or Structural Engineer who is registered to practice in the State of Oregon.

2. Provide calculations for the different load, support and other conditions that occur during the sequence of installation, construction of facilities protected by the shoring and the sequence of removal of the internal bracing and shoring.

E. Sheet Pile Driving Equipment: Information on type of equipment to be used, including manufacturer, model number and driving energy.

F. Qualifications of registered Professional Engineer and shoring installer, including project references.

G. Prepare a detailed plan illustrating the sequence of installation and removal of shoring systems and internal bracing. Include sketches showing the various stages in the sequence.

H. Letter confirming installation of the shoring system is in accordance with the shoring design.

I. Control Points and Stability Measurements:

1. Submit proposed location and details of control points and method and schedule for obtaining stability measurements.

2. Submit field notes documenting stability measurements.

1.05 INSTALLER QUALIFICATIONS

A. Shoring installer must have a minimum of five successful past installations of shoring systems of comparable overall heights and comparable penetration of soils similar to those found on the project site.

1.06 PERFORMANCE REQUIREMENTS

A. Design and install excavation support and protection systems that are capable of:

1. Supporting excavation sidewalls and bottom to maintain the required excavation or trench section.

2. Resisting soil and hydrostatic pressure and superimposed construction loads and other live loads.

3. Protecting existing facilities in the vicinity of the excavation from damage due to settlement or movement of soil

B. Provide professional engineering services necessary to assume engineering responsibility, including preparation of Shop Drawings and a comprehensive engineering analysis by a qualified professional engineer registered in the State of Oregon.

C. Install and remove excavation support and protection systems without damaging existing buildings, pavements, utilities, railroad facilities and other improvements adjacent to excavation.

D. Excavations

1. Protect workers from hazard of caving ground and other hazards.

2. Install excavation protection system in locations where:

a. Protection system is specifically indicated on the Drawings.

b. Excavations are equal to, or greater than, 5 feet deep.

c. Excavations are less than 5 feet deep, but there is a potential for cave-in.

d. When engineering analyses prepared by the Contractor indicate the stability of existing structures and facilities may be jeopardized by settlement or movement of soil.

1.07 GENERAL DESIGN REQUIREMENTS

A. Design excavation support systems to meet requirements and standards of the Occupational Safety and Health Administration (OSHA).

B. Design excavation support systems to meet the requirements of Oregon Administrative Rules, Chapter 437, Division 3, Subdivision P.

C. Design structural steel members in accordance with the American Institute of Steel Construction (AISC) Manual of Steel Construction Allowable Stress Design and the Uniform Building Code.

D. Excavation support systems for trench excavations shall be selected by the Contractor based on the soil and rock conditions, depths of trench excavations, groundwater conditions and other site conditions. No attempt has been made by Engineer to define acceptable trench shoring options.

E. Excavation support systems for structural excavations may consist of either driven steel sheet piling or drilled and/or driven soldier beam and lagging systems complying with requirements of this Section. Contractor may select from either specified system.

F. Allowable Deflection: Not more than 1/2-inch at any point on the shoring system.

G. Cantilevered Design Limits:

1. Maximum height of cantilevered shoring above the bottom of the excavation shall not exceed 15 feet.

H. Resistance to Overturning

1. Design soldier piles and sheet piles with sufficient depth below the excavation to:

a. Resist lateral movement or overturning of the pile, and

b. Act as an effective water cutoff to prevent heaving or flow of soil into the excavation.

2. Calculate the required depth of pile below the bottom of the excavation by assuming the soil immediately below the bottom of excavation does not provide passive resistance for a depth of 1.5 times the effective pile diameter.

1.08 DESIGN REQUIREMENTS FOR SOLDIER PILES AND LAGGING

A. Design soldier piles for downward loads including vertical loads from tie back anchors.

B. Flexural Strength of Lagging: In accordance with the Uniform Building Code, but not greater than 1,500 psi.

C. Wales: Use back-to-back structural members.

D. Soil Anchors, Rock Anchors and Deadmen Anchors:

1. Design tie back anchors with a safety factor of not less than 2 times the calculated load from the shoring.

2. When calculating the length of soil anchors needed to resist the load from the shoring, do not include any anchor length within the potential active pressure soil failure zone behind the face of the shoring.

3. Design anchor tie rods for 130 percent of the calculated load from the shoring.

4. When tie rod couplings are used, design anchor tie rods for 150 percent of the calculated load from the shoring.

1.09 GEOTECHNICAL DATA REPORT (GDR)

A. A geotechnical data report has been prepared for this Project and is included with specifications as a supplement for information only. Owner will not be responsible for interpretations or conclusions drawn from this data.

1. Make additional test borings and conduct other exploratory operations necessary for design of the excavation support systems.

2. Copies of the GDR are bound separately and are included in the Contract Documents.

1.10 GEOTECHNICAL ENGINEERING REPORT

A. A Geotechnical Engineering Report has also been prepared and it is available if requested. The geotechnical engineering report is not considered part of the Contract Documents.

1.11 PROJECT SPECIFIC DESIGN REQUIREMENTS

A. Design of Excavation Support System

1. Design Groundwater Elevation: Two feet below ground surface elevation.

2. For excavations extending into basalt bedrock the rock can be cut at slopes as steep as vertical.

3. Specialized drilling equipment may be required to pre-drill holes for soldier pile installation within bedrock.

4. Excavation support systems may be required to protect utilities and provide space for access to the site.

1.12 JOB SITE POSTINGS

A. Maintain at least one copy of the protection system design at the job site while the excavation is open in accordance with the requirements of Oregon Administrative Rules, Chapter 437, Division 3, Subdivision P.

1.13 SEQUENCE AND SCHEDULING

A. Do not begin excavations or installation of excavation supports until submittals for excavation support systems have been accepted by the Engineer and until materials necessary for installation are on site.

B. Allow a minimum of 30 calendar days for Engineer's review of submittals for excavation support systems.

C. Do not begin excavations or installation of excavation support systems until initial survey measurements on control points on existing structures and other improvements are obtained to document baseline elevations and locations.

PART 2 - PRODUCTS

2.01 MATERIALS

A. General: Provide materials that are either new or in serviceable condition.

B. Structural Steel Soldier Beams: ASTM A36, ASTM A690 or ASTM A992.

C. Steel Sheet Piling: ASTM A328, ASTM A572 or ASTM A690; with continuous interlocks.

D. Wood Lagging: Lumber, mixed hardwood, nominal rough thickness as determined by design calculations, but not less than 3 inches.

E. Lean Concrete Mix:

1. Controlled Low Strength Material in accordance with Section 31 23 23.33.

2. A mixture of sand, fine aggregate, water and 2 sacks of cement per cubic yard to create a flowable mixture that fills voids.

3. Minimum Compressive Strength: 1500 psi.

PART 3 - EXECUTION

3.01 PREPARATION

A. Prior to beginning installation of the excavation support system, pothole to locate existing buried utilities in the vicinity of the excavation. Survey utilities and compare actual locations to those locations indicated on the Drawings and the Shop Drawings. Determine any areas of conflict and revise the design and layout of the excavation support system to eliminate these conflicts.

3.02 SLOPING AND BENCHING OF EXCAVATED FACES

A. Where structural excavation support systems are not specifically indicated on the Drawings, sloping and benching systems for exposed faces of excavations may be utilized.

B. Construct sloping and benching systems in accordance with Section 31 00 00.

3.03 TRENCHING SUPPORT SYSTEMS

A. Where structural excavation support systems are not specifically indicated on the Drawings, trench support systems consisting of hydraulic jacks and plates, trench shield systems, and other trench protection systems may be utilized.

3.04 SOLDIER BEAMS AND LAGGING

A. Before starting excavation, drive steel soldier beams or install steel soldier beams in pre-drilled holes.

1. Installation of Soldier Beams in Pre-Drilled Holes

a. Diameter of pre-drilled hole: Not to exceed the outside dimensions of the soldier beam.

b. Backfill around soldier beam using a lean concrete mix.

B. Space soldier beams at regular intervals not to exceed allowable flexural strength of the wood lagging. Align exposed faces of flanges to vary not more than 2 inches from a horizontal line and not more than 1:120 out of vertical alignment.

C. Install wood lagging within flanges of soldier beams as excavation proceeds. Trim excavation as required to install lagging.

D. Install horizontal wales at locations indicated on the shop drawings and secure to soldier beams.

E. Fill voids behind lagging with gravel, lean concrete, or other material acceptable to the Engineer.

3.05 SHEET PILING

A. Before starting excavation, install one-piece sheet piling lengths and tightly interlock to form a continuous barrier. Align exposed faces of sheet piling to vary not more than 2 inches from a horizontal line and not more than 1:120 out of vertical alignment. Cut tops of sheet piling to uniform elevation at top of excavation.

3.06 BRACING

A. Locate bracing to clear temporary and permanent work and to allow lowering of material and equipment into the excavation.

B. If necessary to move brace, install new bracing before removing original brace.

C. Install internal bracing when calculations indicate bracing is required to prevent spreading or distortion of braced frames.

D. Maintain bracing until structural elements are supported by other bracing or until permanent construction is able to withstand lateral earth and hydrostatic pressures.

3.07 INSPECTION

A. Designer of the shoring system is responsible for confirming proper installation of the shoring system. Shoring system designer, or a representative of the designer, shall make site visits to confirm installation is in accordance with the accepted shoring design.

B. Submit letter of proper installation confirming installation is in accordance with the shoring design.

C. Remove at least the top 10 feet of excavation support systems.

D. Remove excavation support and protection systems when backfill can support the remaining open excavation and bear soil and hydrostatic pressures. Remove support and protection systems in stages to avoid disturbing underlying soils or damaging structures, pavements, facilities, and utilities.

E. After removal, promptly fill voids resulting from the extraction of shoring with sand-cement grout conforming to the requirements of Section 03 60 00. Repair or replace adjacent work damaged or displaced by excavation support and protection systems removal.

END OF SECTION

SECTION 32 01 16

PAVEMENT RESTORATION

PART 1 - GENERAL

1.01 SECTION INCLUDES

A. The restoration of asphalt and concrete pavements and surfaces, including roadways, driveways, road shoulders, medians, traffic signal loops, pavement markings, curbs, gutters, sidewalks, and any other surfaces that may be damaged as a result of the work.

1.02 REFERENCED SECTIONS

A. The following Sections are referenced in this Section:

1. Section 01 33 00 – Submittals
2. Section 32 11 23– Aggregate Base Course

1.03 REFERENCES

A. Standard Specifications:

1. Where the term "Standard Specifications" is used, such reference shall mean the current edition of the Oregon Department of Transportation Standard Specifications for Highway Construction.
2. Where reference is made to a specific part of the Standard Specifications, such applicable part shall be considered as part of this section of the Specifications.
3. In case of a conflict in the requirements of the Standard Specifications and the requirements stated herein, the requirements herein shall prevail.

1.04 SUBMITTALS

A. Provide submittals in accordance with Section 01 33 00.

B. Submit information for materials to be used in restoring surfaces including mix designs, aggregates, asphalt, pavement fabrics, liquid priming asphalt, surface sealers, roadway striping products, and all other materials to be used for surface restoration.

1.05 DEFINITIONS

A. Surface Restoration: The repair or replacement of surface materials back to pre-construction condition or better or as indicated due to the work or damaged as a result of the work.

PART 2 - PRODUCTS

2.01 MATERIALS

A. Aggregate base and sub-base materials:

1. As defined in Section 32 11 23, unless otherwise indicated.

B. Hot Mix Asphalt Concrete (HMAC) Pavement:

1. Level 2 ACP, 1/2” dense, conforming to Section 00744 of the Standard Specifications, modified by this Section.

C. Prime coat:

1. Conforming to Section 00700 of the Standard Specifications.

D. Tack coat:

1. Conforming to Section 00730 of the Standard Specifications.

E. Traffic Stripes and Pavement Markers:

1. Conforming to the 2018 Standard Specifications for Construction.

2. Thermoplastic alkyd-type for extrusion application producing an adherent reflectorized stripe capable of resisting deformation by traffic.

F. Concrete:

1. Conforming to Section 02015 of the. Standard Specifications.

PART 3 - EXECUTION

3.01 GENERAL

A. Reconstruct surfaces to pre-construction condition or better unless otherwise indicated, including curbs, gutters, sidewalks, driveways, road shoulders, medians, pavement, ditches, drainage ways, and related items that have been temporarily removed, damaged, or displaced as part of the work.

B. Reconstruct pavements in conformance with the 2018 Standard Specifications for Construction, as modified herein.

3.02 SAWCUTTING

A. Sawcut existing pavement surfaces prior to surface restoration.

B. Sawcut in straight lines parallel or perpendicular to existing roadway centerlines a minimum of 12 inches outside the edge of trench unless otherwise indicated.

C. Where sections of existing pavement remain that are less than 2 feet wide between the proposed sawcut and an existing edge of asphalt concrete, curb, or gutter, remove the existing remaining pavement and replace it as part of the pavement restoration.

D. Where pavement is damaged outside of sawcut lines, re-cut lines and remove damaged pavement.

E. Where voids develop under existing pavement to remain, re-cut lines, remove pavement and fill voids.

3.03 ASPHALT CONCRETE PAVEMENT SURFACE RESTORATION

A. Place asphalt concrete in accordance with the following as modified herein:

1. Prepare the road subgrade as specified in the Standard Specifications for Construction.

2. Immediately after the asphalt concrete mixture has been spread, struck off and surface irregularities and other defects remedied, it shall be thoroughly and

uniformly compacted by rolling until it is compacted to at least 90% of max density. Max density of the mixture shall be determined in conformance with AASHTO T -209. The surface of each layer and of each course shall be rolled when the temperature of the mixture is above 185-degrees Fahrenheit.

3. Test asphalt concrete per:

a. Section 00744.49 of the . Standard Specifications.

3.04 CONCRETE PAVEMENT SURFACE RESTORATION (NOT USED)

3.05 RESTORATION OF PRIVATE ROADS, PARKING AREAS, AND OTHER PRIVATE IMPROVED AREAS

A. Reconstruct finished surfaces of private roads, parking areas, and other improved areas with the same materials and to not less than the pre-construction dimensions, unless otherwise indicated.

B. Reconstruct improvements damaged as part of the work to pre-construction condition or better.

C. Asphalt Pavement: Match existing pavement thickness, or at least 3 inches of asphalt concrete, whichever is greater.

D. Gravel, stone, or aggregate surfaces: Match existing thickness, or at least 6 inches, whichever is greater.

3.06 RESTORATION OF CONCRETE SURFACES

A. Reconstruct concrete surfaces including curbs, gutter, sidewalks, wheelchair ramps, medians, valley gutters and any other concrete surface or structure temporarily removed, damaged, or displaced as part of the work in accordance with:

1. Section 00759 of the 2018 Standard Specifications for Construction.

3.07 SEALCCOAT (NOT USED)

3.08 TRAFFIC STRIPES AND PAVEMENT MARKINGS

A. Replace traffic stripes and pavement markings in conformance with the following as modified below:

1. 2018 Standard Specifications for Construction.

2. Contractor to coordinate with Owner to determine if Local Standard Specification is available. If one is available, it will take precedence over the Standard Specifications.

B. Restore traffic stripes and pavement markings in accordance with the following schedule.

1. Place cat tracking for the remaining striping the day following installation of the surface course.

2. Place traffic striping and markings not more than one day following approval of the cat tracking by the roadway jurisdiction.

3. Place pavement markings not more than 2 weeks following installation of the pavement.

C. Application:

1. Apply thermoplastic material by extrusion method in a single, uniform layer.
2. Use stencils in new condition without bends or damage when applying pavement markings.
3. Completely coat the pavement surface and fill all surface voids with the marking material.
4. Apply glass beads promptly to the molten thermoplastic material.
5. Rates of application
   a. Stripes: 0.075-inch thick, ± 0.005 inch.
   b. Pavement markings: 0.125-inch thick, ± 0.005 inch
   c. Glass beads: 8 pounds per 100 square feet.

3.09 PAVEMENT MARKERS

A. Restore pavement markers in accordance with:

1. 2018 Standard Specifications for Construction.
2. Contractor to coordinate with Owner to determine if Local Standard Specification is available. If one is available, it will take precedence over the Standard Specifications.

3.10 TRAFFIC SIGNAL LOOPS (NOT USED)

3.11 RAISING MANHOLE, VALVE, AND OTHER UTILITY COVERS (NOT USED)

END OF SECTION

SECTION 32 01 17

COLD PLANE PAVEMENT REMOVAL

PART 1 - GENERAL

1.01 SCOPE

A. This Section includes the grinding of existing Portland cement and asphaltic concrete pavement.

B. Section Includes:

1. Concrete pavement removal equipment.
2. Concrete pavement removal.

1.02 REFERENCED SECTIONS

A. The following Sections are referenced in this Section

1. Section 32 01 20 – Reconditioning Existing Roadway Reference Standards

1.03 REFERENCED STANDARDS

A. Standard Specifications:

1. Where the term "Standard Specifications" is used, such reference shall mean the current edition of the Oregon Department of Transportation Standard Specifications for Highway Construction.
2. Where reference is made to a specific part of the Standard Specifications, such applicable part shall be considered as part of this section of the Specifications.
3. In case of a conflict in the requirements of the Standard Specifications and the requirements stated herein, the requirements herein shall prevail.

PART 2 - MATERIALS

2.01 EQUIPMENT

A. Planing machine or grinder.

1. Self-propelled.
2. Capable of accurately establishing profile grades within a tolerance of 0.02-foot by reference from either the existing pavement or from independent grade control.
3. Possess a positive means for controlling cross slope and elevations.
4. The equipment shall incorporate a totally enclosed cutting drum with replaceable cutting teeth and shall have an effective means for removing excess material from the surface and for preventing dust from escaping into the air.

B. The use of a heating device to soften the pavement will not be permitted.

PART 3 - EXECUTION

3.01 PAVEMENT REMOVAL

A. Work Limits:

1. The existing pavement shall be removed to the depth, width, grade and cross section shown on the Drawings or as directed by the Engineer to provide a surface profile true to specified grade and transverse slope.

B. Scheduling:

1. Except where samples are taken to establish a job mix formula, the existing surfacing shall not be removed more than 24 hours prior to construction of the new surfacing, unless otherwise approved by the Engineer.

2. Where permits obtained for the project dictate scheduling of existing pavement removal and construction of new surfacing and vary from the requirements of this Section, the stricter of the conditions shall apply.

C. Procedures for conducting cold plane removal of material shall conform to the requirements and specifications set forth in the Section 00620, Cold Plane Pavement Removal, of the Standard Specifications.

3.02 RECONDITIONING EXISTING ROADWAY

A. The reconditioning and preparing of existing roadway subgrades, aggregate bases, surfacings and pavements shall be completed in accordance with Section 32 01 20.

3.03 DISPOSAL OF MATERIALS

A. Materials removed under this Section which are not recycled and used on the project shall become the property of the Contractor at the point of removal and shall be disposed of off the limits of the project in a manner satisfactory to the Owner.

END OF SECTION

SECTION 32 01 20

RECONDITIONING EXISTING ROADWAY

PART 1 - GENERAL

1.01 SECTION INCLUDES

A. Reconditioning and preparing of existing roadway subgrades, aggregate bases, surfacings and pavements on which an additional layer or course of material is to be placed. Work under this Section includes existing roadway shoulders, cut ditches, road connections, approach roads, and other roadbed areas on which construction work is to be performed

B. Section Includes:

Removal and replacement of unsuitable materials.

Reconditioning and preparing of existing roadway subgrades, aggregate bases, surfacings and pavements.

1.02 REFERENCE STANDARDS

A. Standard Specifications:

Where the term "Standard Specifications" is used, such reference shall mean the current edition of the Oregon Department of Transportation Standard Specifications for Highway Construction.

Where reference is made to a specific part of the Standard Specifications, such applicable part shall be considered as part of this section of the Specifications.

In case of a conflict in the requirements of the Standard Specifications and the requirements stated herein, the requirements herein shall prevail.

PART 2 - MATERIALS

2.01 MATERIALS

A. Provide materials and quality control in accordance with Section 00610, Reconditioning Existing Roadways, of the Standard Specifications.

PART 3 - EXECUTION

3.01 CONSTRUCTION

A. Comply with the requirements of Section 00610, Reconditioning Existing Roadways, of the Standard Specifications.

END OF SECTION

(THIS PAGE LEFT BLANK INTENTIONALLY)

SECTION 32 11 23

AGGREGATE BASE COURSE MATERIAL

PART 1 - GENERAL

1.01 SECTION INCLUDES

A. Aggregate base course material and placement.

1.02 DEFINITIONS

A. Completed Course: Compacted, unyielding, free from irregularities, with smooth, tight, even surface, true to grade, line, and cross-section.

B. Completed Lift: Compacted with uniform surface reasonably true to cross-section.

1.03 STANDARD SPECIFICATION

A. Oregon Standard Specifications for Construction (OSSC), 2021 edition.

1.04 SUBMITTALS

A. Product Data: Source, gradation, and testing data records for aggregate base course material previously produced by the supplier, which demonstrates compliance with the specified gradation and physical requirements.

1.05 DELIVERY, STORAGE AND HANDLING

A. Storage and Protection: Protect from segregation and excessive moisture during delivery, storage, and handling.

1.06 QUALITY ASSURANCE

A. Material and Compaction Testing

1. Source Testing of Materials: Provided and paid for by the Contractor

2. Field Testing for Compaction: Provided and paid for by the Owner

B. Compaction Testing

1. In-place Density: Density of aggregate base course material that has been placed and compacted in the field, then tested in conformance with ASTM D6938 to determine density relative to the maximum density.

2. Maximum Density: Density obtained in the laboratory when tested in accordance with ASTM D1557.

PART 2 - PRODUCTS

2.01 MATERIALS

A. Aggregate: Clean, hard, durable particles consisting of the any combination of the following:

1. Crushed Rock

2. Sand

B. Use either 1-1/2-inch or 3/4-inch aggregate grading unless otherwise indicated. Do not change grading without authorization from the Engineer.

C. Conform to the following gradation when tested in accordance with AASHTO T 27:

Sieve Sizes (Square Openings)	Percent by Weight Passing Sieve 3/4" Maximum	Percent by Weight Passing Sieve 1-1/2" Maximum
2"	-	100
1-1/2"	-	95-100
1-inch	100	-
3/4-inch	90-100	55-75
1/2"	-	-
3/8"	55-75	-
1/4"	40-60	35-50
No. 10	(1)	(1)
(1) Of the fraction passing the 1/4 inch sieve, 40% to 60% shall pass the No. 10 sieve.		

A. Conform to the following fracture of rounded rock when tested in accordance with AASHTO T 335:

Minimum Percent of Fractured Particles (by Weight of Material)	
Designated Size	Retained on ¼ inch Sieve
1 ½"–0 and larger	50
Smaller than 1 ½"-0	70

B. Conform to the following durability requirements:

Test	Test Method	Requirements
Abrasion	AASHTO T 96	35% maximum
Degradation	ODOT TM 208	30% maximum
Sediment Height	ODOT TM 208	3.0" maximum

C. Sand Equivalent (AASHTO T 176): 30 minimum.

PART 3 - EXECUTION

3.01 PLACEMENT

A. Obtain Engineer's acceptance of subgrade before placement of base course.

B. Do not place aggregate base material on soft, muddy or frozen subgrade.

C. Moisture condition, spread and compact aggregate base course material to the lines, grades and dimensions indicated on the Drawings and in accordance with applicable sections of OSSC Section 00641.

1. Do not haul material over surfacing in process of construction.

2. Spread and distribute material to provide the required density, depth, grade and dimensions with allowance for subsequent lifts.

3. Produce an even distribution of material without segregation. Should segregation occur, modify or change the spreading procedure to correct segregation problems and to result in uniformity in grading.

3.02 COMPACTION REQUIREMENTS

A. Compact aggregate base course material to obtain an In-Place Density of 95 percent of maximum density unless otherwise indicated.

B. Commence compaction effort by starting at the outer edges of the layer and continue toward the center.

C. Apply water as needed to obtain required In-Place Density.

D. Place and compact each lift to required density before succeeding lift is placed.

E. Blade or otherwise work surfacing as necessary to maintain grade and cross-section at all times, and to keep surface smooth and thoroughly compacted.

3.03 TOLERANCES

A. Structure subgrade: Plus or minus 0.05-foot of the design elevation.

B. Pavement subgrade: Plus or minus 0.05-foot of the design elevation.

C. Aggregate Base surface grade: Plus or minus 0.05-foot of the design elevation.

3.04 FIELD QUALITY CONTROL

A. Contractor's compaction testing responsibilities:

1. Accomplish specified degree of compaction.

2. Undertake and control compaction effort by confirmation tests to verify that the compaction work complies with the specified degree of compaction.

3. Pay for compaction testing services and submit compaction test reports to the Engineer.

B. Frequency of Compaction Testing

1. Structures: Make one compaction test for each 50 cubic yards of aggregate base course material placed, with a minimum of one compaction test per structure.

2. Roadway and Paved Areas: Make one test every 1500 square feet of pavement.

END OF SECTION

(THIS PAGE LEFT BLANK INTENTIONALLY)

SECTION 32 12 16

ASPHALT CONCRETE PAVEMENT

PART 1 - GENERAL

1.01 SECTION INCLUDES

A. Construction of asphalt concrete pavement.

1.02 REFERENCE STANDARDS

A. References herein to "AASHTO" shall mean Association of American State Highway Transportation Officials.

B. Standard Specifications:

1. Where the term "Standard Specifications" is used, such reference shall mean the current edition of the Oregon Department of Transportation Standard Specifications for Highway Construction.

2. Where reference is made to a specific part of the Standard Specifications, such applicable part shall be considered as part of this section of the Specifications.

3. In case of a conflict in the requirements of the Standard Specifications and the requirements stated herein, the requirements herein shall prevail.

1.03 DEFINITIONS

A. Maximum Density Test (MDT): Theoretical maximum density of the bituminous mixture determined by multiplying the theoretical maximum specific gravity, determined by ASTM D2041 (Rice), by 62.4 pounds per cubic foot.

1.04 SUBMITTALS

A. Aggregate Qualification Tests: In accordance with Standard Specifications Section 00640 for aggregate used in aggregate base.

B. Aggregate Qualification Tests: In accordance with Standard Specifications Section 00745 for aggregate used in asphalt concrete.

C. Job mix formula shall be an approved job mix formula. Submit formula, supplier, and product identification to the Engineer 30 days prior to start.

1. Definite percentage for:

a. Each sieve fraction.

b. New asphalt cement.

c. Recycled asphalt pavement.

2. Temperature of completed mix when discharged from mixer.

3. Character and quantity of anti-strip and recycling agents.

1.05 QUALITY ASSURANCE

A. Testing to determine compliance with the specifications shall be performed by an independent testing laboratory contracted by the Contractor and approved by the Engineer. Testing costs shall be borne by the Contractor.

B. A minimum of five nuclear densometer readings shall be taken in random locations within every test area. Each test area shall not exceed 200 tons of asphalt; however, smaller areas may be designated by the Engineer.

C. The surface smoothness of the new asphalt concrete pavement shall be such that when a 10-foot straightedge is laid longitudinally across the paved area in any direction, the new pavement shall not deviate from the straightedge more than 1/8-inch. Surface drainage shall be maintained. Additionally, paving must conform to the design grade and crown and contain no abrupt edges, low or high areas or any other imperfections as determined by the Engineer. Pavement construction not meeting these requirements will be repaired by grinding the existing pavement to a 1-1/2-inch depth and replacing with Level 3, 1/2-inch dense graded Hot Mix Asphalt Concrete (HMAC) the full width at no cost to Owner.

1.06 PRE-PAVING CONFERENCE

A. Any supervisory personnel of the Contractor and any subcontractors who are to be involved in the paving work shall meet with the Engineer, at a time mutually agreed upon, to discuss methods of accomplishing all phases of the paving work.

B. The Contractor shall be prepared to review the size and type of equipment to be used and the anticipated rate of placement to determine equipment needs.

PART 2 - PRODUCTS

2.01 AGGREGATE MATERIAL

A. Aggregate Base for Dense Graded Asphalt Concrete: The aggregate material shall be a clean, well-graded crushed base aggregate conforming to the Standard Specifications. Base course shall be 3/4-inch minus aggregate as shown on the Drawings or as otherwise approved during construction.

2.02 ASPHALT CONCRETE PAVEMENT

A. Dense Graded HMAC:

1. Use Level 3, 1/2-inch-dense graded, PG 64-22 HMAC. Conform to the requirements as specified in Section 00745 of the Standard Specifications. Conform to the requirements as specified in Section 00745 of the Standard Specification.

2. Asphaltic concrete pavement delivered to the site shall be accompanied by a ticket with the approved "job mix formula" number shown. Loads without tickets identifying the job mix formula will not be accepted.

3. Percent of recycled asphalt pavement used in new asphalt pavement shall not exceed 30 percent. Recycled asphalt pavement may not be used in top wearing course unless otherwise approved by the Engineer.

B. Tack Coat

In accordance with Standard Specifications. Use AR 4000, AC-20 asphalt or CSS-1 emulsified asphalt C.

C. Seal and Cover Coat

Asphalt material shall be CRS-2 cationic emulsified asphalt. Cover stone shall conform to size 1/4-inch #10 aggregate in the Standard Specifications.

D. Subgrade Geotextile

1. For subgrade separation using dense graded asphalt concrete, use subgrade geotextile with Certification Level B as specified in Section 02320 of the Standard Specifications.

E. Subgrade Stabilization

In the event that unstable materials are encountered during excavation, the additional excavation and installation of geotextile fabric and 12 inches of rock substructure will be required, as directed. Conform to the requirements as specified in Section 00331 of the Standard Specifications. For subgrade separation, use subgrade geotextile with Certification Level B as specified in Section 02320 of the Standard Specifications.

PART 3 - EXECUTION

3.01 AGGREGATE PAVEMENT BASE

A. Place pavement base to the depth shown on the plans or as specified in all cases, pavement base shall be compacted to a minimum depth of 6 inches. Bring the top of the pavement base to a smooth, even grade at a distance below finished grade equivalent to the required pavement depth.

B. Compact the pavement base with mechanical vibratory or impact tampers to a density of not less than 95 percent of the maximum density, as determined by AASHTO T-99.

C. Obtain the Engineer's acceptance of the subgrade before beginning construction of the aggregate base course.

D. When, in the judgment of the Engineer, the weather is such that satisfactory results cannot be secured, suspend operations. Place no aggregate base course in snow or in soft, muddy, or frozen subgrade.

E. If the required compacted depth of aggregate base course exceeds 6 inches, construct in two or more lifts of approximately equal thickness. Maximum compacted thickness of any one lift shall not exceed 6 inches. Compact each layer to the specified density before a succeeding lift is placed.

3.02 ASPHALT CONCRETE PAVEMENT

A. Construct asphalt concrete pavement in accordance with Section 00745 of the Standard Specifications.

B. Conform to the requirements for prime coat and tack coat in the Standard Specifications. Tack coat all edges of existing pavement, manhole and clean out frames, inlet boxes, and

like items. When rate is not specified, asphalt will be applied at the rate of 0.1-gallon per square yard.

C. Obtain the Engineer's acceptance of the aggregate base course before beginning construction of the asphalt concrete wearing course.

D. Hot mix asphalt shall be placed on dry, prepared surfaces, when air temperature in the shade of 40 degrees Fahrenheit (F) or warmer, unless otherwise authorized by the Engineer.

E. Placing asphalt pavement during rain or other adverse weather conditions will not be permitted unless otherwise authorized by the Engineer, except that asphalt mix in transit at the time these adverse conditions occur may be placed provided it is of proper temperature, the mix has been covered during transit, and it is placed on a foundation free from mud or free-standing water.

F. Correct any defects in material and workmanship, as directed, when determined detrimental by the Engineer. These include segregation of materials, non-uniform texture, and fouled surfaces preventing full bond between successive spreads of mixture. The corrections or replacement of defective material or workmanship shall be at the Contractor's expense.

G. Compact the bituminous mixture to at least 92 percent of the Theoretical Maximum Density.

H. The finished surface of each course of layer of mixture shall be of uniform texture, smooth, and free of defects and shall closely parallel that specified for the top surface finished grade. Remove and replace boils and slicks immediately with suitable materials.

I. The surface of each layer when tested with a Contractor-furnished 10-foot straightedge shall not vary from the testing edge by more than 0.02-foot for underlying courses of pavements and 0.015-foot for finished top courses or wearing courses of pavements. At no point shall the finished top of the wearing course vary more than 0.03-foot from the specified finished grade.

J. Lift thickness shall be as shown on the drawings or specified, but not to exceed 3 inches.

K. Do not place asphalt concrete pavement on emulsified asphalt (tack coat) until the asphalt separates from the water (breaks) but before it loses its tackiness.

L. Asphalt and sand seal edges where new asphalt concrete meets existing pavement.

3.03 FIELD QUALITY CONTROL

A. Job mix will be sampled immediately behind the paving machine.

B. Temperature of the mix will be measured immediately behind the paver.

C. The theoretical maximum specific gravity of the bituminous mixture will be determined in accordance with ASTM D2041.

D. Properties of the job mix will be measured using ASTM D2041.

E. Density of the compacted job mix will be measured in accordance with ASTM D2922.

3.04 ADJUSTMENT OF EXISTING MANHOLE COVERS AND VALVE BOXES

A. Prior to placing asphalt concrete pavement, the CONTRACTOR shall make all necessary adjustments to existing manhole frames and covers and valve box covers to ensure that the tops of the manhole covers or valve box lids are flush with the finished grade of the adjoining pavement or ground surface, and that valve boxes and PVC pipes are centered and plumb over operating nut valve.

END OF SECTION

(THIS PAGE LEFT BLANK INTENTIONALLY)

SECTION 32 31 13

CHAIN LINK FENCES AND GATES

PART 1 - GENERAL

1.01 SECTION INCLUDES

A. Chain link fences and gates.

1.02 SUBMITTALS

A. Product Data: Submit construction details, material descriptions, gate hardware, and other data completely describing products.

B. Shop Drawings: Submit drawings showing fence and gate details. Include gate elevation drawings, post anchorage details, bracing details, extension arms, and accessories

1.03 REFERENCE SPECIFICATIONS

A. Furnish chain link gate and materials in compliance with Owner specifications. Where Owner specifications and this specification conflict, Owner specification take precedence.

1.04 QUALITY ASSURANCE

A. Manufacturer: Specializing in the manufacturer of chain link fence products with at least 5 years experience.

B. Fence installer: Company with demonstrated successful experience installing similar projects and products in accordance with ASTM F567 and having at least 5 years experience installing chain link fencing.

C. Tolerances: Current published edition of ASTM specifications tolerances apply.

1.05 DELIVERY, STORAGE, AND HANDLING

A. Storage and Handling: Unload, store, and protect new and existing materials such that they are not damaged.

1.06 SEQUENCE AND SCHEDULING

A. Fences and Gates: May be constructed at any time after earthwork, pipe work, and structures to which fence is related have been completed, but prior to erosion control application.

PART 2 - PRODUCTS

2.01 MATERIALS

A. Steel Chain Link Fabric

1. Height: As indicated

2. Mesh: 2 inches.

3. Size Wire: 9 gauge.

4. Coating:

a. Provide coating as indicated.

b. Zinc coated Steel Fabric, ASTM A392 hot dipped galvanized before or after weaving,

1) Class 2 (2.0 oz/sf).

5. Fabric Selvage (2" mesh):

a. 72-inch and Greater: knuckle finish top and bottom.

B. Steel Pipe Fence Framework

1. Steel Pipe and Rail:

a. Schedule 40 standard weight pipe in accordance with ASTM A1088

b. Minimum 1.8 oz/sf hot dip galvanized zinc interior and exterior coating

c. Minimum steel yield strength: 30,000 psi for fence along ground.

d. Minimum steel yield strength: 50,000 psi for fence along retaining wall.

2. Line Posts:

a. 2.375-inch outside diameter, 3.65 pounds per linear foot for fence along ground.

b. 3.5-inch outside diameter, 7.58 pounds per linear foot for fence along retaining wall.

3. End, Corner, Pull post:

a. 2.875-inch outside diameter, 5.79 pounds per linear foot for fence along ground.

b. 3.5-inch outside diameter, 7.58 pounds per linear foot for fence along retaining wall.

4. Top, Brace, Bottom and Intermediate Rails:

a. 1.62-inch outside diameter, 2.27 pounds per linear foot

C. Tension Wire

1. Metallic Coated Steel Marcelled Tension Wire

a. 7-gauge marcelled wire complying with ASTM A824

b. Zinc Coated, ASTM A871 Class 5 (2.0 oz/sf)

c. Galvanized coil spring wire.

D. Barbed Wire

1. Metallic coated Barbed Wire:

a. Comply with ASTM A1221, Design Number 12-4-5-14R, double 12-1/2-gauge twisted strand wire with 4 point 14-gauge round barbs spaced 5 inches on center

b. Coating:

1) Zinc-coated Type Z, Class 3

2) Strand wire coating: 0.80 oz/sf,

3) Barb coating: 0.70 oz/sf

E. Fittings

1. Tension and Brace Bands: Galvanized pressed steel complying with ASTM F626, minimum steel thickness of 12 gauge, minimum width of 3/4 inch and minimum zinc coating of 1.20 oz/sf. Secure bands with 5/16inch galvanized steel carriage bolts.

2. Terminal Post Caps, Line Post Loop Tops, Rail and Brace Ends, Boulevard Clamps, Rail Sleeves: In compliance to ASTM F626, pressed steel galvanized after fabrication having a minimum zinc coating of 1.20 oz/sf.

3. Truss Rod Assembly: In compliance with ASTM F626, 3/8-inch diameter steel truss rod with a pressed steel tightener, minimum zinc coating of 1.2 oz/sf, assembly capable of withstanding a tension of 2,000 lbs.

4. Tension Bars: In compliance with ASTM F626. Galvanized steel one-piece length 2 inch less than the fabric height. Minimum zinc coating 1.2 oz. /sf.

    a. Bars for 2 inch and 1-3/4 inch mesh shall have a minimum cross section of 3/16 inch by 3/4 inch.

5. Barbed Wire Arms: In compliance with ASTM F626, pressed steel galvanized after fabrication, minimum zinc coating of 1.20 oz. /sf, capable of supporting a vertical 250 lb load.

    a. Type I – three strand 45-degree arm

F. Tie Wire and Hog Rings

1. Galvanized minimum zinc coating 1.20 oz/sf, 9-gauge steel wire in compliance with ASTM F626

G. Swing Gates

1. Galvanized steel pipe welded fabrication in compliance with ASTM F900.

2. Gate frame members 1.900-inch OD 2.72 lb/lf ASTM F1083 schedule 40 galvanized steel pipe.

3. Frame members spaced no greater than 8 feet. apart vertically and horizontally.

4. Welded joints protected by applying zinc-rich paint in accordance with ASTM Practice A780.

5. Positive locking gate latch, pressed steel galvanized after fabrication.

6. Galvanized malleable iron or heavy gauge pressed steel post and frame hinges.

7. Provide lockable drop bar and gate holdbacks with double gates.

8. Match gate fabric to that of the fence system.

9. Extend gate posts and frame members above the top of the chain link fabric at both ends of gate frame to provide support for barbed wire where barbed wire is indicated.

H. Gate Posts and Concrete Foundations for Gate Posts:

1. Gateposts per ASTM F1083 schedule 40 galvanized steel pipe.

Gate Leaf Widths, feet	Posts		Foundations	
	O.D., inches	Ounces per Lin Ft	Diameter, inches	Depth, feet
Gates with fence fabric up to and including 6 ft in height				
0 to 4	2.375	3.56	12	3
Over 4 to 10	2.875	5.79	12	4
Over 6 to 18	4.000	9.11	18	3
Gates with fence fabric over 6 ft to 12 ft in height				
0 to 6	2.875	5.79	12	4
Over 6 to 12	4.000	9.11	18	3
Over 12 to 18	6.625	18.97	18	4
Over 18 to 25	8.625	28.58	18	4.5

I. Concrete: Minimum 28-day compressive strength of 2,500 psi.

J. Fence Grounding:

1. Conductors: Bare, solid copper wire No. 6 AWG.
2. Connectors: Metal ground connectors, suitable for connecting to the ground rod and the metal fence post.
3. Ground rods: Copper clad, 5/8-inch diameter by 96-inch long.

PART 3 - EXECUTION

3.01 EXAMINATION

A. Verify field conditions prior to construction.

3.02 GENERAL

A. Install chain link fence and gates as indicated on the Drawings and specified in this Section.

B. Provide fence systems that are plumb, taut, true to line and grade, and complete in all details.

C. Install fencing to generally follow finish grade of ground and provide pull posts at points where required to conform to change in grade.

D. Install fencing such that space between bottom of fence and finish grade does not exceed 1 inch.

E. Unless otherwise indicated install fence with top rail and bottom tension wire.

3.03 CLEARING FENCE LINE

A. Survey, clear, grub, grade and remove debris for installation of the fence line or required clear areas adjacent to the fence as indicated. Where no requirements are indicated, provide minimum 10 feet wide cleared and graded area centered on the fence line.

3.04 INSTALLATION

A. Posts:

1. Set posts plumb in concrete footings in accordance with ASTM F567.
2. Unless otherwise indicated:
   a. Set minimum footing depth, 24 inches plus an additional 3-inch depth for each 1 foot increase in the fence height over 4 feet.
   b. Minimum footing diameter four times the largest cross section of the post up to a 4.00 inches outside diameter and three times the largest cross section of post greater than a 4.00 inches outside diameter.
   c. Wind load may require larger diameter or deeper footings for fence with slats.
   d. Top of concrete footing to be 1 inch above grade crowned to shed water away from the post.
   e. Line posts installed at intervals not exceeding 10 ft. (3.05 m) on center.
3. Finish top of concrete footings in a workmanlike manner.

B. Top Rail:

1. Install top rail in 21 foot lengths of rail continuous thru the line post or barb arm loop top.
2. Splice rail using top rail sleeves minimum 6-inches long.
3. Secure rail shall to terminal post by a brace band and rail end.

C. Bottom/Intermediate Rail:

1. Field cut and secure rail to line posts using boulevard clamps or brace band with rail end.

D. Terminal posts:

1. Brace and truss end, corner, pull and gate posts for fence 6 feet and higher and for fences 5 feet in height not having a top rail.
2. Install horizontal brace rail and diagonal truss rod in accordance with ASTM F567.

E. Tension wire:

1. Install tension wire 4 inches up from the bottom of the fabric.
2. Install tension wire 4 inches down from the top of the fabric where fence does not have a top rail.
3. Stretch tension wire taut, independently and prior to the fabric, between the terminal posts and secure to the terminal post using a brace band.
4. Secure the tension wire to each line post with a tie wire.

F. Chain Link Fabric:

1. Install fabric to outside of the framework.

2. Attach fabric to the terminal post by threading the tension bar through the fabric; secure the tension bar to the terminal post with tension bands and 5/16-inch carriage bolts spaced no greater than 12 inches on center.

3. Small mesh fabric less than 1 inch, attach to terminal post by sandwiching the mesh between the post and a vertical 2-inch-wide by 3/16-inch galvanized steel strap using carriage bolts, bolted thru the bar, mesh and post spaced 15 inches on center.

4. Stretch chain link fabric taut free of sag.

5. Secure fabric to line posts with tie wires spaced no greater than 12 inches on center and to horizontal rail spaced no greater than18 inches on center.

6. Secure fabric to the tension wire with hog rings spaced no greater than 18 inches on center.

7. Secure tie wires:

   a. Wrap tie wire around the post or rail and attach to the fabric wire picket on each side by twisting the tie wire around the fabric wire picket two full turns.

   b. Cut off excess wire and bend over to prevent injury.

G. Barbed Wire:

1. Stretch barbed wire taut between terminal posts and secure in the slots provided on the line post barb arms.

2. Attach each strand of barbed wire to the terminal post using a brace band.

H. Razor Wire

1. Install as indicated and per manufacturer's recommendations.

I. Gate Installation

1. Swing Gates:

   a. Install swing gates and gateposts in compliance with ASTM F567.

   b. Direction of swing: as indicated.

   c. Install gates plumb in the closed position having a maximum bottom clearance of 3 inches.

   d. Install gates with hinge and latch offset opening no greater than 3 inches in the closed position.

   e. Install double gate drop bar receivers in a concrete footing minimum 6 -inch diameter by 24 inch deep.

   f. Install gate leaf holdbacks for all double gates.

   g. Install electrically operated gates in compliance with ASTM F2200 and UL 325.

3.05 ADJUSTING

A. Adjust gate travel, stops, and operator position to meet field conditions.

3.06 FENCE GROUNDING

A. Install fence grounding where high-tension power lines cross fence line, fencing is within 150 feet horizontally of high-tension power lines or as indicated.

B. Grounding locations:

1. Power line crossing: At nearest fence post to crossing, nearest fence post each side of crossing at 150 feet from crossing, and at each gate within 150 feet of crossing.

2. Power line parallel: At nearest fence post to 150 foot intervals and at each gate.

C. Grounding method.

1. At each grounding location, drive ground rod vertically next to fence post until top is flush with finish grade.

2. Connect conductor to ground rod, fence post and fence fabric with metal connector.

3. Bond each gate with a flexible grounding strap.

3.07 CLEANING

A. Leave the area of the fencing neat and free of debris caused by the installation of the fence.

3.08 PROTECTION

A. Protect installed fences and gates against damage and, if damaged, repair prior to final acceptance.

END OF SECTION

(THIS PAGE LEFT BLANK INTENTIONALLY)

SECTION 33 13 00

DISINFECTING WATER PIPELINES

PART 1 - GENERAL

1.01 SECTION INCLUDES

A. Requirements for disinfecting water pipelines prior to placing in service and includes:

1. Potable

1.02 SUBMITTALS

A. Identify methods that will be utilized to disinfect water pipelines in accordance with AWWA Standards and this Specification. Include:

1. Procedures, sample locations, type of disinfectant, and method of disposing of spent disinfectant.

B. Identify testing laboratory.

C. Submit test results.

1.03 QUALITY ASSURANCE

A. Demonstrate through analytical testing that the water pipelines are disinfected and meets requirements specified in AWWA C651.

B. Enlist the services of a testing laboratory to obtain, transport and test water samples.

1. Testing Laboratory Qualifications: Certified to perform chlorine concentration testing and bacteriological testing in accordance with AWWA standards.

C. Testing expenses: Borne by the Contractor.

PART 2 - PRODUCTS

2.01 DISINFECTANT AND DILUTION/FLUSHING WATER

A. Disinfectant: Use sodium hypochlorite solution or calcium hypochlorite granules or tablets meeting the requirements of AWWA B300. Do not utilize hypochlorite manufactured for swimming pools.

B. Dilution/Flushing Water:

1. Owner will supply potable water for Contractor's use in preparing disinfecting solution. Contractor shall convey water in disinfected pipelines or containers.

2.02 CONTRACTOR'S EQUIPMENT

A. Furnish pumps, hoses, sample connections and other equipment needed to complete disinfection process.

PART 3 - EXECUTION

3.01 GENERAL

A. Disinfect pipelines installed or modified under this Project, including:

1. Potable water, recycled water, untreated water pipelines

2. Disinfect the following:

a. Up to the point of connection with existing water system.

b. Service laterals, hydrants, and other appurtenances connected to the pipelines to be disinfected.

c. Other water facilities installed as part of the work and connected to the pipelines to be disinfected.

B. Do not connect pipelines to any other facilities until other facilities have been disinfected.

C. Avoid recontamination following disinfection. Repeat disinfection procedure if recontamination occurs.

3.02 SEQUENCING

A. Disinfect pipelines after successful pressure testing unless approved otherwise by the Owner.

3.03 DISINFECTION PROCEDURE

A. Flush water pipelines prior to disinfecting. Use potable water for flushing. Operate valves at least twice during flushing process.

B. Disinfect water pipelines in accordance with AWWA C651. Allow potable water and disinfectant solution to flow into pipe at a measured rate so chlorine solution is at a specified strength. Do not place concentrated liquid disinfectant in pipeline or other facilities to be disinfected before it is filled with water.

C. Retain chlorinated water in the piping for a minimum of 24 hours, or for a longer duration when necessary to destroy bacteria.

D. When piping meets disinfection requirements, release disinfecting solution water from the pipeline by flushing to a location acceptable to the owner of the facilities receiving the solution.

E. not make the final connection until the new pipelines system is tested and meets the disinfection requirements.

F. Prior to making final connection to the existing water system, swab or spray hypochlorite solution on the interior surfaces of valves, couplings, pipelines and appurtenances that will be utilized to make the final connection.

3.04 SAMPLE COLLECTION AND TESTING

A. Collect and analyze samples to confirm disinfection process results in compliance with Health Department regulations and AWWA standards.

1. Obtain samples bottles that are free of contamination from testing laboratory.

2. Obtain chain of custody documents from testing laboratory.

B. Provide valves at sample points.

C. Utilize the services of a certified testing laboratory to obtain and test samples to confirm pipelines meets requirements of AWWA C651 and the State Health Department. Repeat the disinfection procedures if the test results indicate the bacteriological standards are not satisfied.

3.05 PLACING POTABLE OR RECYCLED WATER FACILITIES IN SERVICE

A. After pipelines and other facilities have been disinfected, refill with [potable] [recycled] water. Obtain additional water samples and analyze for conformance to bacteria limits for public water supplies.

B. If analytical results indicate compliance with bacteria limits, place new facility in service.

C. If analytical results indicate treated pipelines do not meet bacteria limits, repeat disinfection procedures and analytical testing of new samples until regulated water quality limits are satisfied.

END OF SECTION

(THIS PAGE LEFT BLANK INTENTIONALLY)

SECTION 33 39 13

PRECAST CONCRETE MANHOLES

PART 1 - GENERAL

1.01 WORK INCLUDED

A. This Section includes materials, testing, and installation of precast concrete manhole for sewer and storm water appurtenances.

1.02 REFERENCE STANDARDS

A. ASTM A48 – Gray Iron Castings

B. ASTM A159 – Standard Specification for Automotive Gray Iron Castings

C. ASTM C361 – Reinforced Concrete Low-Head Pressure Pipe

D. ASTM C478 – Precast Reinforced Concrete Manhole Sections

E. ASTM C923 – Resilient Connectors between Reinforced Concrete Manhole Structures and Pipes

F. ASTM C990 – Joints for Concrete Pipe, Manholes, and Precast Box Sections Using Preformed Flexible Joint Sealants

G. ASTM D1557 – Laboratory Compaction Characteristics of Soil Using Modified Effort (56,000 ft-lbf/ft^3(2,700 kN-m/m^3))

H. ASTM D2922 – Density of Soil and Soil-Aggregate in Place by Nuclear Methods (Shallow Depth)

1.03 QUALITY ASSURANCE

A. All materials furnished under this Section shall be:

1. From a manufacturer who has been regularly engaged in the design and manufacture of the materials for at least five (5) years; and

2. Approved by the engineer before installation. The Engineer shall verify that the product and quality is equal to the materials made by those manufacturers specifically named herein, or if an alternate product manufacturer is proposed.

1.04 SUBMITTALS

A. The Contractor shall submit for approval by the Engineer the following:

1. Manufacturer's literature on the materials identified on the Drawings and in this specification. Literature shall include recommended installation procedures.

2. Certification by the manufacturer that all precast sections furnished under this specification were manufactured, sampled, tested, and inspected in accordance with ASTM C478 or ASTM C361.

3. Mix design of the concrete used for the manhole base.

4. Frame, grates, rings, and covers.

5. Material to be used for pipe connections at manhole walls.

PART 2 - PRODUCTS

2.01 MANHOLES

A. Precast Concrete Manholes

1. All precast concrete manhole sections shall conform to the details shown on the Drawings and specified herein. Precast manhole sections shall be manufactured in accordance with ASTM C478 “Precast Reinforced Concrete Manhole Sections”. Manholes shall be leak free structures. Structures constructed with precast sections shall be constructed using a single manufacturers products and/or with products recommended by the precast section manufacturer.

2. Manhole Sizes

Pipe Diameter	Manhole Diameter	Cover Diameter
21 inch and smaller	48 inch	24 inch
24 inch and 27 inch	60 inch	24 inch
30, 33 and 36 inch	72 inch	24 inch

3. Manhole Joints

a. Manhole joints shall be tongue and groove style.

B. Manhole Cones

1. Standard manhole cones shall be concentric.

C. Manhole Bases

1. Manhole bases shall be cast-in-place in accordance with the Drawings and this specification. Concrete for manhole base shall be 6-sack with a 4,000 psi rating. Top of base channel shall be six inches (6”) above the crown of pipe.

D. Manhole Inlet

1. For manholes with more than one inlet, the invert of the smaller inlet shall be at or above the centerline of the larger pipe. Channel for the side entry shall be properly shaped to provide minimum turbulence in the manhole.

E. Ladder Rungs

1. Manhole ladder rungs shall be installed for all manholes deeper than four feet (4’). Rungs shall be made of one-half inch (½”) diameter grade 60 steel with Copolymer Polypropylene coating. Steps are to be cast in place during manufacturing of precast barrels and cones.

F. Joint Sealer

1. Joints in precast manhole sections shall be made of "Ram-Nek" preformed flexible plastic joint sealant or neoprene gaskets.

2. External joints shall be wrapped with JK Polysource M-860, or approved alternate.

2.02 MANHOLE FRAMES AND COVERS

A. Non-pressure type manhole frames and covers shall be Phoenix Iron Works P-1090 or D&L Supply A-1024, or equal.

B. Pressure type manhole frames and covers shall be Phoenix Iron Works P-1002 (bolt-down), or equal. Both manhole frames and covers shall meet all requirements of ASTM A159, "Automotive Gray Iron Castings."

C. Manhole covers shall be labeled “Sanitary Sewer”.

D. Manhole covers shall have at least one center pick hole and one edge pry hole.

E. Adjustment rings shall NOT be used on any sewer manhole. Frames must be raised.

F. Anchor bolts shall be fabricated as specified by the equipment manufacturer and, unless otherwise indicated, shall be stainless steel. Cone shall be drilled to accept three-fourths inch (¾”) stainless steel inserts. Manhole rim is to be bolted down prior to the pouring of the concrete cap

PART 3 - EXECUTION

3.01 CONNECTIONS TO EXISTING MANHOLES

A. Pipe connections to existing manholes shall be done under the direction of the Owner and other applicable requirements specified for new manholes, including all necessary concrete work, cutting and shaping of channel.

B. All PVC and HDPE pipe entering or leaving a manhole shall have a rubber sealing gasket as supplied by the pipe manufacturer, firmly seated perpendicular to the pipe axis, around the pipe exterior and cast into the structure base or near the wall center as a water stop. Water stop may also consist of a manhole coupling with rubber rings cast into the structure base.

C. Existing flow shall be maintained through a bypass. A bypass plan shall be submitted and the Contractor shall be solely responsible for maintaining the bypass and shall be liable for any fines by any agency as a result of any spill or overflow.

3.02 ABANDONMENT OF EXISTING MANHOLES

A. Manholes to be abandoned shall have their cones removed, backfilled and compacted to ninety-five percent (95%) relative compaction. Frames and covers not to be reused shall be delivered to the Owner as directed by the Owner.

3.03 MANHOLES

A. Manhole Bases

1. Manhole bases shall be cast-in-place unless specified otherwise. The Contractor shall not deviate from plan dimensions, notwithstanding over-excavation or other detrimental field conditions, unless approved by the Owner. A forming ring shall be used to form a level joint groove in fresh concrete of the manhole base to receive the precast barrel section of the manhole. The metal forming ring shall be removed after the concrete has sufficiently set to eliminate any slump in the joint groove.

2. Manhole bases shall be poured over twelve inches (12”) of ¾-inch drain rock over undisturbed material. Manhole drain rock shall be compacted to a relative compaction of ninety percent (90%) per ASTM D1557 and ASTM D2922.

3. Manhole Channels: Where sewer lines ingress and egress manholes pipe shall be used to form the channel. After the base concrete has set, the channel shall be shaped to the final required configuration. Perpendicular channel sides shall not be allowed. All channels shall be approved by the Owner.

4. All connections shall provide for a watertight seal between the pipe and the manhole. The connector shall be the sole element relied upon to assure a flexible water tight seal of the pipe to the manhole.

5. When connecting new pipe to existing manholes, a channel and bench walls shall be installed.

6. The pipe up to the structures shall not project beyond the inside wall of the structure and in no case shall the socket of a vitrified clay pipe be built into the wall of a structure.

B. Joints in precast manhole sections shall be filled using "Ram-Nek" or approved equal in the joint space between matching parts. After placement of the subsequent section, excess sealant squeezed from joint shall be removed and the joint area troweled smooth. Special precautions shall be taken to ensure that the entire joint space is filled with sealant. Apply mortar to all joints.

C. Apply concrete sealant “XYPEX Concentrate” 2 coats to manhole base and 1 coat to inside and outside of barrels.

3.04 WORKING ON EXISTING MANHOLES

A. When work is to be performed above the flow channel of existing manholes, plywood shall be used to cover the entire channel and a drop cloth shall be used to cover the entire base and prevent any debris from entering the flow-channel. Noncompliance will result in the suspension of that portion of the Contractor’s work for the day until the precautionary measures are put in place. No contract time extensions will be granted due to said suspension of work. This precaution shall be taken to prevent debris from entering or obstructing the flow to the Collection System.

B. Sanitary sewer connections to existing manholes shall be core-drilled and made using a flexible rubber seal / waterstop. Saw cutting and hammer through taps are prohibited.

3.05 ADJUSTING EXISTING FRAMES AND COVERS TO GRADE

A. General

1. Before any work is performed on existing manholes, plywood shall be used to cover entire channel and a drop cloth be used to cover the entire base. This precaution shall be taken to prevent debris from entering the Collection System. Existing frames, covers, or adjustment rings removed during adjustments may be reinstalled only if the materials are undamaged and only if approved in advance by the Owner.

2. Manholes shall be raised flush with the finished grade of the new road surface. The maximum allowable tolerance shall be one-fourth inch (¼”) measured with a straightedge.

3. Manhole frame and cover shall be shimmed. The void between the top of manhole cone or ring and the cover frame shall be filled with cement mortar.

4. No bricks, shims or any other device shall be left as part of final construction.

5. Manhole covers shall have no other holes, other than the center pick hole and side pry hole.

B. Downward Adjustments

1. Downward adjustments can be made by removal of grade rings, mortar, concrete or brick. At no time shall the cone be modified in any way.

C. Manhole Surface Block

1. Manhole surface blocks (collars) are required on all manholes. A block is to be poured around each adjusted frame. The block is to be eighteen inches (18”) wide as measured from the outside edge of the cover and twelve inches (12”) thick. Concrete is to be poured no more than two inches (2”) from final grade and rough finished to accept asphalt overlay. Frame is then to be grouted to grade to grade rings and cone.

3.06 TESTING

A. The Contractor shall conduct an exfiltration test or vacuum test on each manhole constructed. The test shall be conducted by the Contractor in the presence of the Owner.

B. Exfiltration tests shall consist of plugging incoming and outgoing sewer lines and filling the manhole with water up to the rim. After initial absorption (15 minutes), if the water loss exceeds one inch in depth in five minutes, the manhole shall have failed the test. Each manhole which fails the test shall be carefully inspected to determine the problem and then resealed and retested until the water loss is less than one inch in five minutes.

C. Vacuum tests shall consist of drawing a vacuum on a sealed manhole and measuring the time for the vacuum to drop to a predetermined level. The actual test procedure shall be provided by the manufacturer of the test equipment and approved by the Owner. Each manhole which fails the test shall be carefully inspected to determine the problem and then resealed and retested until the manhole passes.

END OF SECTION

(THIS PAGE LEFT BLANK INTENTIONALLY)

SECTION 40 05 07

PIPE HANGERS AND SUPPORTS

PART 1 - GENERAL

1.01 SECTION INCLUDES

A. Hangers and supports for all piping systems specified in Sections 40 05 10.

B. This section does not include pipe supports for fire sprinkler systems, pipe anchors, guides or seismic restraints.

C. For seismic restraint requirements for piping, see Section 40 05 96.

1.02 REFERENCED SECTIONS

A. The following Sections are referenced in this section

1. Section 01 33 00 – Submittals
2. Section 01 61 11 – Seismic Anchorage and Bracing
3. Section 05 50 01 – Anchor Bolts and Anchoring Devices
4. Section 40 05 10 – Piping Systems
5. Section 40 05 96 – Seismic Restraints for Piping

1.03 QUALITY CONTROL

A. Operating Conditions

1. The hangers and supports specified in this section are provided to resist pipe loads occurring primarily in the downward (gravity) direction. For the purpose of pipe hanger and support selection, this section establishes pipe support classifications based on the operating temperatures of the piping contents. Pipe support classifications are as follows:

a. Hot Systems: A. 120°F to 450°F.

b. Ambient Systems: B. 60°F to 119°F.

c. Cold Systems: C-1. 33°F to 59° F, C-2. -20°F to 32°F.

B. Hanger and Support Selection

1. Select pipe hangers and supports as specified. Base selections upon the pipe support classifications specified in this section and any special requirements which may be specified in the contract documents.

2. Review the piping layout in relation to the surrounding structure and adjacent piping and equipment before selecting the type of support to be used at each hanger point.

3. Design and select hangers and supports to withstand all static and specified dynamic conditions of loading to which the piping and associated equipment may be subjected. As a minimum, consider the following conditions:

a. Weights of pipe, valves, fittings, insulating materials, suspended hanger components, and normal fluid contents.

b. Weight of hydrostatic test fluid or cleaning fluid if normal operating fluid contents are lighter.

c. Reaction forces due to the operation of safety or relief valves.

d. Wind, snow, or ice loadings on outdoor piping.

4. Size hangers and supports to fit the outside diameter of pipe, tubing, or, where specified, the outside diameter of insulation.

5. Where negligible movement occurs at hanger locations, use rod hangers for suspended lines, wherever practical. For piping supported from below, use bases, brackets or structural cross members.

6. For the suspension of size 2-1/2" and larger pipe and tubing, use hangers capable of vertical hanger component adjustment under load.

7. Provide supporting systems which provide for and control the free or intended movement of the piping including its movement in relation to that of connected equipment.

8. Where there is horizontal movement at a suspended hanger location, select hanger components to allow for swing. Do not permit the vertical angle of the hanger rod to exceed 4º at any time.

9. Do not permit contact between a pipe and hanger or support component, constructed of dissimilar metals. Prevent contact between dissimilar metals when supporting copper tubing by using copper-plated, rubber, plastic or vinyl coated, or stainless steel hanger and support components.

10. Unless otherwise specified, existing pipes and supports shall not be used to support new piping.

11. Unless otherwise specified, pipe support components shall not be attached to pressure vessels.

12. Stock hanger and support components shall be used wherever practical.

1.04 INDUSTRY STANDARDS

A. This section contains references to the following documents. They are a part of this section as specified and modified. In case of conflict between this section and the listed documents, the requirements of this section shall prevail.

B. Unless otherwise specified, references to documents shall mean the documents in effect at the time of Advertisement for Bids or Invitation to Bid (or on the effective date of the Agreement if there were no Bids).

C. If referenced documents have been discontinued by the issuing organization, references to those documents shall mean the replacement documents issued or otherwise identified by the organization or, if there are no replacement documents, the last version of the document before it was discontinued.

D. Where document dates are given in the following listing, reference to those documents shall mean the specific document version associated with that date, whether or not the document has been superseded by a version with a later date, discontinued, or replaced.

Reference	Title
AISC Manual of Steel Construction	American Institute of Steel Construction, Manual of Steel Construction, - 13th Edition
OSSC	2019 Oregon Structural Specialty Code
FEDSPEC WW-H-171e	Hangers and Supports, Pipe
MFMA-4	Metal Framing Manufacturer's Association, Metal Framing Standards Publication
MSS SP-58	Manufacturers Standardization Society Pipe Hangers and Supports—Materials, Design and Manufacture
MSS SP-69	Manufacturers Standardization Society Pipe Hangers and Supports—Selection and Application

1.05 SUBMITTALS

A. Provide hanger and support locations, load calculations, and manufacturer layout and detail drawings as part of the submittals for equipment and piping coordination and installation drawings required in Section 40 05 10.

B. The load and support design calculations shall be stamped and signed by a licensed Civil or Structural Engineer in the State of Oregon. Comply with Sections 01 61 11 and 05 50 01. Coordinate calculations with those required by Section 40 05 96.

PART 2 - PRODUCTS

2.01 MANUFACTURERS

A. B-Line

B. Carpenter & Paterson

C. Kin-Line

D. Anvil International

E. Michigan

F. Pipe Shields Incorporated

G. Superstrut

H. Unistrut

I. Or equal as specified in Section 01 33 00.

J. Comply with MSS SP-69 and FEDSPEC WW-H-171e for pipe support components and MFMA-4 for framing systems

2.02 PRODUCTS

A. Material

1. Pipe hangers and supports, structural attachments, rack and trapeze supports, fittings and accessories: 316 stainless steel.

2. Nuts, bolts, washers, and other fasteners: Type 316 stainless steel.

3. Safety end caps on all framing channels.

4. Comply with MSS SP-58 for supports and MFMA-4 for framing systems.

B. Pipe Hangers and Supports

1. Type 1 – Clevis Pipe Hanger, configuration and components equivalent to MSS and FEDSPEC Type 1.

   a. Steel pipe (insulated): B-Line B3100, Anvil International 260, or equal, with insulation shield.

   b. Steel pipe (uninsulated): B-Line B3100, Anvil International 260, or equal.

   c. Cast and ductile iron pipe: B-Line B3102, Anvil International 590, or equal.

   d. Copper pipe (uninsulated): B-Line B3104 CT, Anvil International CT-65, or equal.

   e. Copper pipe (insulated): B-Line B3100, Anvil International 260, or equal, with insulation shield.

   f. Plastic pipe: B-Line B3100 C, Carpenter & Paterson Fig. 100PVC, or equal.

2. Type 2 – J Pipe Hanger, configuration and components equivalent to MSS Type 5

   a. Steel pipe: B-Line B3690, Anvil International 67, Michigan model 418, or equal.

   b. Copper and plastic pipe: Michigan model 419, Unistrut J 1205N series, or equal.

3. Type 3 – Double Bolt Pipe Clamp, configuration and components equivalent to MSS and FEDSPEC Type 3.

   a. Steel pipe (insulated): B-Line B3144, Anvil International 295, or equal, with insulation shield. Insulation shield is optional for hot and ambient systems.

   b. Steel pipe (uninsulated): B-Line B3144, Anvil International 295, or equal.

   c. Copper pipe (insulated only): B-Line B3144, Anvil International 295, or equal, with insulation shield.

4. Type 4 – Adjustable Roller Hanger, configuration and components equivalent to MSS Type 43 and FEDSPEC Type 44.

   a. Steel pipe (insulated): B-Line B3110, Anvil International 181, or equal, with insulation shield.

   b. Steel pipe (uninsulated): B-Line B3110, Anvil International 181, or equal.

   c. Copper pipe (insulated only): B-Line B3110, Anvil International 181, or equal, with insulation shield.

   d. Plastic pipe: B-Line B3110, Anvil International 181, or equal.

5. Type 5 – Single Pipe Roll, configuration and components shall be equivalent to MSS Type 41 and FEDSPEC Type 42.

   a. Steel pipe (insulated): B-Line B3114, Anvil International 171, or equal, with insulation shield.

b. Steel pipe (uninsulated): B-Line B3114, Anvil International 171, or equal.

c. Plastic pipe: B-Line B3114, Anvil International 171, or equal.

6. Type 6 – Framing Channel Pipe Clamp

a. Steel pipe (uninsulated):

1) Pipe size 3/8” and 1/2”: 16-gage;

2) 3/4” through 1 1/4”: 14 gage;

3) 1-1/2” through 3”: 12-gage;

4) 3 1/2” through 5”: 11- gage;

5) 6 and 8”: 10-gage;

b. Michigan Model 431, Powerstrut PS 1100, Unistrut P 1109 series, or equal.

c. Steel pipe (insulated): Pipe clamp as described in Paragraph 2.02 B.6.a with insulation shield.

d. Copper (uninsulated) and plastic pipe:

1) Pipe size 3/8” and 1”: 16-gage;

2) 1-1/4” and 1-1/2”: 14-gage;

3) 2” through 3”: 12-gage;

4) 4”: 11-gage;

5) Clamp: copper-plated, plastic coated or lined with dielectric material;

6) Michigan model 432, Powerstrut PS 1200, Unistrut P 2024C and P 2024PC series, or equal.

e. Copper pipe (insulated): Pipe clamp shall be as described in Paragraph 2.02 B.6.a with insulation shield.

7. Type 7 – U-Bolt Configuration equivalent to MSS and FEDSPEC Type 24.

a. Steel pipe (uninsulated): Anvil International. 137, B-Line B3188, or equal.

b. Steel pipe (insulated): Anvil International. 137, B-Line B3188, or equal, with insulation shield.

c. Cast and ductile iron pipe: Anvil International. 137, B-Line B3188, or equal.

d. Copper pipe (uninsulated): Carpenter & Paterson Fig. 222 CT, B-Line B3501 CT, Anvil International. 137C, or equal.

e. Copper pipe (insulated): Anvil International. 137, B-Line B3188, or equal, with insulation shield.

f. Plastic pipe: Anvil International. 137C, Michigan model 151, B-Line B3188 C, or equal.

8. Type 8 – Adjustable Pipe Roll Support

a. Steel pipe (insulated): B-Line B3122, Anvil International. 177, or equal, with insulation shield.

b. Steel pipe (uninsulated): B-Line B3122, Anvil International. 177, or equal.

c. Copper pipe (insulated only): B-Line B3122, Anvil International. 177, or equal, with insulation shield.

d. Plastic pipe: B-Line B3122, Anvil International. 177, or equal.

9. Type 9 – Welded Pipe Stanchion

a. Minimum material thickness: standard schedule pipe, cut to match contour of the pipe elbow.

b. Limit use of this support to ambient systems only.

10. Type 10 – Pipe Stanchion Saddle and Yoke, comply with MSS Type 37 and FEDSPEC Type 38.

a. Steel pipe (insulated): Carpenter & Paterson Fig. 125, B-Line B3090, or equal, with insulation shield.

b. Steel pipe (uninsulated): Carpenter & Paterson Fig. 125, B-Line B3090, or equal.

c. Cast and ductile iron pipe: Carpenter & Paterson Fig. 125, B-Line B3090 NS, or equal.

d. Copper pipe (uninsulated): Carpenter & Paterson Fig. 125, B-Line B3090, or equal, with insulation shield or lined with dielectric material.

e. Copper pipe (insulated): Carpenter & Paterson Fig. 125, B-Line B3090, or equal, with insulation shield.

f. Plastic pipe: Carpenter & Paterson Fig. 125, B-Line B3090, or equal.

11. Type 11 – Offset Pipe Clamp, Provided with configuration and components specified using standard designs offered by a pipe hanger component manufacturer.

a. Steel pipe (insulated): B-Line B3148, Anvil International 103, or equal, with insulation shield.

b. Steel pipe (uninsulated): B-Line B3148, Anvil International 103, or equal.

c. Cast and ductile iron pipe: B-Line B3148 NS, Anvil International 103, or equal.

d. Copper pipe (insulated): B-Line B3148, Anvil International. 103, or equal, with insulation shield.

e. Copper pipe (uninsulated): B-Line B3148, Anvil International. 103, or equal, lined with dielectric material.

f. Plastic pipe: B-Line B3148, Anvil International. 103, or equal.

g. Vertical pipe support applications: as specified above except do not use insulation shields for insulated pipe.

12. Type 12 – Riser Clamp, configuration and components equivalent to MSS and FEDSPEC Type 8.

a. Steel pipe (insulated): B-Line B3373, Anvil International 261, or equal.

b. Steel pipe (uninsulated): B-Line B3373, Anvil International 261, or equal.

c. Cast and ductile iron pipe: B-Line B3373, Anvil International 261, or equal.

d. Copper pipe (insulated): B-Line B3373 CT, Anvil International CT-121, Michigan model 511, or equal.

e. Copper pipe (uninsulated): B-Line B3373 CT, Anvil International CT-121, Michigan model 511, or equal.

f. Plastic pipe: B-Line B3373, Anvil International. 261c, or equal.

13. Type 13 – Framing Channel Pipe Strap, configuration equivalent to MSS Type 26.

a. Steel pipe (uninsulated): Superstrut No. C-708-U, Powerstrut PS 3126, Kin-Line No. 477, or equal.

b. Steel pipe (insulated): Superstrut No. C-708-U, Powerstrut PS 3126, Kin-Line No. 477, or equal, with insulation shield.

c. Copper pipe (uninsulated): Superstrut No. C-708-U, Powerstrut PS 3126, Kin-Line No. 477, or equal, with insulation shield or lined with dielectric material.

d. Copper pipe (insulated): Superstrut No. C-708-U, Powerstrut PS 3126, Kin-Line No. 477, or equal, with insulation shield.

e. Plastic pipe: Superstrut No. C-708-U, Powerstrut PS 3126, Kin-Line No. 477, or equal.

C. Rack and Trapeze Supports

1. General

a. Unless otherwise specified, provide trapeze and pipe rack components minimum thickness of 12 gage, with a maximum deflection 1/240 of the span.

2. Type 20 – Trapeze Pipe Support

a. For trapeze pipe support cross members, use framing channel as specified in Paragraph 2.02 E.5. For flat plate fittings, 1-5/8” square standard design manufactured by framing channel manufacturer, Unistrut P2471, B-Line B202-2, or equal.

3. Type 21 – Pipe Rack Support

a. For post and cross members, use framing channel as specified in Paragraph 2.02 E.5. For pipe rack fittings, use standard design manufactured by framing channel manufacturer. For 90º fittings, use gusseted Unistrut P2484, B-Line B844, or equal. Provide post base fittings as specified in Paragraph 2.02 D.5.

D. Structural Attachments

1. Type A –Insert For Concrete:

a. Concrete inserts: Comply with MSS and FEDSPEC Type 18.

b. Anvil International 282, Carpenter & Paterson Fig. 108, or equal.

2. Type B – Side Beam Bracket

a. Comply with MSS Type 34 and FEDSPEC Type 35.

b. Anvil International. 202, B-Line B3062, or equal.

3. Type C –Beam Clamp with Extension Piece

a. Comply with MSS and FEDSPEC Type 30.

b. Anvil International. 218 with Fig. 157 extension piece, B-Line B3054, or equal.

4. Type D – Beam Clamp with Eye Nut

a. Beam clamp and eye nut: forged stainless steel.

b. For configuration and components, comply with MSS and FEDSPEC Type 28.

c. Anvil International. 292, Carpenter & Paterson Fig. 297, or equal.

5. Type E – Framing Channel Post Base

a. Standard design offered by framing channel manufacturer.

b. Single channel: Unistrut P2072A, B-Line B280, or equal.

c. Double channel: Unistrut P2073A, B-Line B281, or equal.

6. Type F – Welded Beam Attachment

a. Comply with MSS and FEDSPEC Type 22. B-Line B3083, Anvil International. 66, or equal.

7. Type G – Welded Steel Bracket

a. Comply with MSS Type 32 and FEDSPEC Type 33 for medium welded bracket.

b. Comply with MSS Type 33 and FEDSPEC Type 34 for heavy welded bracket.

8. Type H –Bracket

a. Carpenter & Paterson Fig. 340, or equal.

9. Type J – Adjustable Beam Attachment

a. Carpenter & Paterson Fig. 151, B-Line B3082, or equal.

10. Type K – Double Channel Bracket

a. Wall channel: single channel framing channel as specified in Paragraph 2.02 E.5.

b. Cantilever bracket: double framing channel assembly, Unistrut P2542 through P2546, B-Line B297-12 through B297-36, or equal.

11. Type L – Single Channel Bracket

a. Wall channel: single channel framing channel as specified in Paragraph 2.02 E.5.

b. Cantilever bracket: a single framing channel assembly, Unistrut P2231 through P2234, B-Line B198-6, B198-12, B196-18 and B196-24, or equal.

12. Type M – Wall Mounted Channel

a. Wall channel: single channel framing channel as specified in Paragraph 2.02 E.5.

13. Type N – Pipe Stanchion Floor Attachment

a. Base plate: 1/2” minimum thickness.

b. Make anchor bolt holes 1/16” larger than the anchor bolt diameter.

c. Fill space between the base plate and the floor with nonshrink grout.

E. Accessories

1. Hanger Rods

a. Rods: threaded on both ends or continuous threaded and sized as specified.

2. Weldless Eye Nut

a. Eye nut: forged stainless steel and complying with MSS and FEDSPEC Type 17.

b. Manufacturer: Anvil International. 290, B-Line B3200, or equal.

3. Welded Eye Rod

a. Weld-eye rod closed. Make inside diameter of eye a bolt diameter 1/8” larger than the rod diameter.

b. Manufacturer: Anvil International. 278, B-Line B3211, or equal.

4. Turnbuckle

a. Turnbuckle: forged stainless steel and complying with MSS and FEDSPEC Type 13.

b. Manufacturer: Anvil International. 230, B-Line B3202, or equal.

5. Framing Channel

a. Framing channel: 1-5/8” square, roll formed, 12-gage.

b. Provide channel with a continuous slot along one side with in-turned clamping ridges.

c. Single channel: Unistrut P1000, B-Line B22, or equal.

d. Double channel: Unistrut P1001, B-Line B22A, or equal.

e. Triple channel: Unistrut P1004A, B-Line B22X, or equal.

PART 3 - EXECUTION

3.01 HANGER AND SUPPORT LOCATIONS

A. Locate hangers and supports as near as possible to concentrated loads such as valves, flanges, etc.

B. Locate hangers, supports and accessories within the maximum span lengths specified in the contract documents to support continuous pipeline runs unaffected by concentrated loads. Indicate hanger and support locations and components on the piping layout drawings required by Paragraph 1.05. For pipe support submittals, provide a complete cross reference of each support by mark number, including the page number on which each mark number can be found. Set up the cross reference to permit review from the mark numbers to the drawings, not the other way around.

C. Locate at least one hanger or support within 2’ from a pipe change in direction.

D. Locate hangers and supports to ensure that connections to equipment, tanks, etc., are substantially free from loads transmitted by the piping.

E. Where piping is connected to equipment, a valve, piping assembly, etc., that will require removal for maintenance, support piping so temporary supports are not necessary.

F. Locate pipe supports to prevent "pockets" from forming in pipe between supports due to excessive deflection under load from weight of pipe, medium in the pipe, insulation, valves and fittings.

3.02 INSTALLATION

A. Construct welded and bolted attachments to the building structural steel which comply with the AISC Manual of Steel Construction. Unless otherwise specified, do not drill or burn holes in the building structural steel.

B. Do not use hanger components for purposes other than for which they were designed. Do not use components for rigging and erection purposes.

C. Install items to be embedded before concrete is poured. Fasten embedded items securely to prevent movement when concrete is poured.

D. Use embedded anchor bolts that satisfy the OSSC provisions instead of concrete inserts for supports in areas below water surface or normally subject to submergence.

E. When hanger and support components are in contact with plastic pipe, make sure the components are free of burrs and sharp edges.

F. Ensure rollers roll freely without binding.

G. Roughen finished floor to a ¼ inch amplitude beneath structural attachments and framing channel post bases prior to grouting. Place grout, free of voids and foreign material, between base plate and floor.

H. Cut and drill base plates to specified dimensions prior to welding stanchions or other attachments and prior to setting anchor bolts.

I. Provide plastic or rubber end caps at the exposed ends of all framing channels that are located up to 7’ above the floor.

3.03 ADJUSTMENTS

A. Adjust hangers and supports to obtain required pipe slope and elevation.

B. Use shims made of material that is compatible with the piping material.

C. Adjust stanchions prior to grouting their base plates.

END OF SECTION)

SECTION 40 05 10

PIPING SYSTEMS

PART 1 - GENERAL

1.01 SECTION INCLUDES

A. Furnish all piping, including fittings, supports, and accessories shown on the Drawings and described herein, to completely interconnect all equipment and valves for a complete and operable system.

1.02 REFERENCED SECTIONS

A. The following Sections are referenced in this Section:

1. Section 01 33 00 – Submittals
2. Section 09 96 00 – High Performance Coatings
3. Section 40 80 02– Testing Pressure Piping

1.03 REFERENCES

A. The standards listed below are a part of this Section as specified and modified. In case of conflict between the requirements of this Section and those of the listed documents, the requirements of this Section shall prevail.

Reference	Title
ANSI B16.1	Cast Iron Pipe Flanges and Flanged Fittings, Class 25, 125, 250 and 800
ASTM A312	Seamless and Welded Austenitic Stainless Steel Pipes
ASTM C76	Standard Specification for Reinforced Concrete Culvert, Storm Drain, and Sewer Pipe
ASTM D1784	Rigid Poly (Vinyl Chloride) (PVC) Compounds and Chlorinated Poly(Vinyl Chloride) (CPVC) Compounds
ASTM D1785	Poly (Vinyl Chloride) (PVC) Plastic Pipe, Schedules 40, 80 and 120
ASTM D2467	Standard Specification for Poly(Vinyl Chloride) (PVC) Plastic Pipe Fittings, Schedule 80
ASTM D2564	Solvent Cements for Poly (Vinyl Chloride) (PVC) Plastic Pipe and Fittings
ASTM D2855	Standard Practice for the Two-Step (Primer and Solvent Cement) Method of Joining Poly (Vinyl Chloride) (PVC) or Chlorinated Poly (Vinyl Chloride) (CPVC) Pipe and Piping Components with Tapered Sockets
ASTM F402	Standard Practice for Safe Handling of Solvent Cements, Primers, and Cleaners Used for Joining Thermoplastic Pipe and Fittings
ANSI B16.12	Cast Iron Threaded Drainage Fittings
AWWA C104	Cement Mortar Lining for Ductile Iron Pipe and Fittings for Water
AWWA C105	Polyethylene Encasement for Ductile Iron Piping
AWWA C110	Ductile-Iron and Gray-Iron Fittings
AWWA C111	Rubber-Gasket Joints for Ductile-Iron and Gray-Iron Pressure Pipe and Fittings

Reference	Title
AWWA C115	Flanged Ductile-Iron and Gray-Iron Pipe with Threaded Flanges
AWWA C151	Ductile-Iron Pipe, Centrifugally Cast in Metal Molds or Sand-Lined Molds, for Water or Other Liquids
AWWA C153	Ductile-Iron Compact Fittings
AWWA C207	Steel Pipe Flanges for Waterworks Service
AWWA C219	Bolted Sleeve-Type Couplings for Plain-End Pipe
AWWA C606	Grooved and Shouldered Joints

1.04 SUBMITTALS

A. Submittals shall demonstrate full compliance with all aspect of this specification and shall include, but not be limited, complete manufactures' data on pipe material fitting, fasteners and hardware, gaskets, linings, and coatings. Comply with Section 01 33 00 and provide the following information:

B. Product Technical Data

1. Submit product data on pipe, fittings, joints and joining materials, gaskets, linings, coatings, hardware, piping connections, piping accessories, and other components.

2. Manufacturers' certifications of compliance with the specified standard.

3. Pipe wall thickness and pressure class

C. Fabrication and/or Layout Drawings

1. Submit schedule of piping systems that will be used and services that they will be used for.

a. For the Critical Piping Area shown on the Drawings, submit a detailed piping layout plan and profile view, including electrical ducts. The submittal shall also include a sequence of construction for installation of pipe in this area.

2. Before preparation of shop drawings, installation conditions, including existing utilities and structures, shall be verified by excavation, inspection, and measurement. Submit field measurements and photos with shop drawings where exposed conditions differ significantly from the conditions indicated on the Drawings.

3. Submit detailed layout drawings of all piping. Schematics may be submitted for piping 3 inches and smaller. Drawings shall include:

a. Dimensions of pipe diameter and length

b. Invert or centerline elevations and sizes of pipe crossings, intersecting ductwork, intersection conduit/conduit racks, or other potential interferences requiring coordination

c. Centerline elevations for pressure pipelines and invert elevations for gravity flow pipelines

d. Bury depth for buried yard piping

e. Location and type of pipe supports and anchors

f. Location of valves and valve actuator type

g. Location and details of fittings, tapping locations, thrust blocks, joint restraints, couplings, flexible expansion joints, connections to equipment, piping accessories, thermal insulation, and related appurtenances.

h. Line slopes and vents

i. Thrust restraints for restrained joints including materials, sizes, assembly rating and pipe attachment methods.

j. Thrust blocks: concrete quantity, bearing area on pipe, and fitting joint locations.

4. Submit schedule of interconnections with existing piping and method of connection.

D. Test Reports

1. Submit certified test reports as required herein and by the referenced standards specifications.

2. Submit field test reports as required in PART 3.

1.05 QUALITY ASSURANCE

A. Materials and equipment furnished under this Section shall be of manufacturers who have been regularly engaged in the design and manufacture of the materials and equipment for a period of at least five (5) years.

B. Factory Quality Control: The Contractor shall test all products as noted herein and by the reference specifications.

C. Field Quality Control:

1. The Contractor shall:

a. Perform leakage tests.

b. Be responsible for the costs of additional inspection and retesting by the Owner resulting from noncompliance.

PART 2 - PRODUCTS

2.01 GENERAL

A. Pipe sizes are nominal inside diameter unless otherwise noted. All sizes of pipe shall be as called out on the Drawings and specified herein.

B. All pipe and fittings delivered to the job site shall be clearly marked to identify the material, class, thickness, and manufacturer.

C. All material shall be new and free of blemishes.

D. Where only one type of pipe is called out, no substitutions shall be allowed.

E. Piping materials of like kind shall be the product of one manufacturer.

F. The Contractor is responsible for furnishing and installing all items necessary to make a complete and workable piping system. This includes, but is not limited to, valve boxes, insulating couplings and gaskets, piping specialties, and all other items required by the nature of the installation. Any item not specified herein but required by the installation

shall be of first quality, equal in grade to similar materials specified herein, and shall comply with all applicable reference standards listed herein.

G. All materials (pipe, fittings, gaskets, linings, etc.) in contact with the potable water or process water to be treated to potable water shall be lead-free and NSF 61 certified.

H. Paint exposed pipe in conformance with requirements of Section 09 96 00.

2.02 PIPE MATERIALS

A. Pipe and Fitting Designation:

1. Piping materials are identified by a "Type" designation in these specifications.
2. Specific piping materials and other pertinent information is summarized for each pipe type.
3. Pipelines are designated on the Drawings by a two-element code, the first representing the nominal pipe diameter and the second an abbreviation indicating the piping system.
4. The following schedules, except where indicated otherwise on the Drawings, identify pipe type to be used for each piping system. Where the pipe type is not specifically identified on the Drawings, materials shall be selected based on the pipe service as listed in the following schedule and specified in subsequent articles of this specification.

B. Pipe Type Schedule:

Abbr.	Fluid Description	Size	Service	Pipe Type
INF	Influent Pump Station Discharge	All	E	DIP-F
INF	Influent Pump Station Inlet	36"	B	PVC-R
FM	Influent Pump Station Forcemain	All	B	HDPE
RDPS	Recycle Drain Pump Station Forcemain	All	B	HDPE
PS	Primary Sludge	All	B	HDPE
PSC	Primary Scum	All	B	HDPE
SL-D	Digested Sludge	All	B	HDPE
SL-WAS	WAS Sludge	All	B	HDPE
DR	Drain (Process)	All	B	HDPE
PFD	Perforated Drain	All	B	PVC-PF
SD	Storm Drain	All	B	PVC-S
SS	Sanitary Sewer	All	B	PVC-S
W	Potable Water	1-inch & >	B	DIP-R
W	Potable Water	1-inch	E	PEX
Service: B=Buried; E=Exposed; C=Concrete Encased; F=Flanged, PF=Perforated, S=Submerged, R=Restrained.				

C. Ductile Iron Pipe – Flanged (DIP-F)

1. Pipe

a. Ductile iron flanged pipe, AWWA C115 or ductile iron grooved end pipe: Ductile iron pipe, AWWA C151 with grooves in accordance with AWWA C606, Table 3, for rigid joints. Provide minimum thickness classes in accordance with AWWA C606.

b. Minimum Pressure Class: 350

c. Minimum Wall Thickness: 53

2. Fittings

a. Ductile iron, AWWA C110.

b. Special fittings not available in ductile iron may be fabricated of epoxy lined and coated welded steel pipe with a design pressure of 350 psi. Submit design and wall thickness to Engineer for review.

3. Joints

a. Provide flanged or grooved couplings are required in the Drawings

b. Flanges: Ductile iron flange, in accordance with AWWA C115 and AWWA C110 and faced and drilled to 125 lb ANSI B16.1 standards.

c. Grooved Coupling: Mechanical grooved couplings, in accordance with AWWA C606, and minimum pressure rating of 150 psi.

4. Bolts and Nuts

a. Above ground and exposed pipe: Corrosion resistant, high strength, low alloy carbon steel hex bolts, conforming to AWWA C115.

b. Underground, in concrete valve boxes, or underwater: Type 304 Stainless Steel.

5. Gaskets

a. Gaskets for flanged joints shall be 1/16 in. thick (1/8 in. thick for pipes 12 in. and larger), rubber conforming to applicable parts of ANSI B16.12 and AWWA C115 and C207.

b. Gasket material shall be free from corrosive alkali or acid ingredients and suitable for use in potable water lines.

c. Gaskets shall be one piece with holes to pass bolts.

6. Lining and Coatings

a. Lining: Ceramic epoxy lined with Protecto 401 or equal.

b. Coating: Exterior of exposed pipe shall be painted in accordance with Section 09 96 00.

D. Ductile Iron Pipe – Restrained (DIP-R)

1. Pipe

a. Ductile iron restrained pipe per AWWA C151.

b. Minimum Pressure Class: 350

c. Minimum Wall Thickness: 53

2. Fittings

   a. Ductile iron with push-on joints or mechanical joints, AWWA C110 or C153.

   b. Special fittings not available in ductile iron or cast iron pipe may be fabricated of welded steel pipe with a design pressure of 350 psi. Submit design and wall thickness to Engineer for review.

3. Joints

   a. Conforming to AWWA C111.

   b. Push-on or mechanical joints, except where flanged joints are shown on the Drawings.

   c. For all connections, provide restrained joints for pipe and fittings that create a change in pipe size and on fittings that result in a change of direction, whether the change is in the horizontal plane or a vertical plane.

   d. Manufacturers: One of the following, or equal.

      1) Push-on Joints

         a) Fastite Joint as manufactured by American Cast Iron Pipe Company.

         b) Pacific States Cast Iron Pipe Company.

         c) Tyton Joint as manufactured by U.S. Pipe.

      2) Restrained Push-on Joints

         a) United States Pipe and Foundry Company, TR Flex.

         b) Pacific States Cast Iron Pipe Company, Thrust Lock.

         c) American Cast Iron Pipe Company, Flex Ring or Lok-Ring.

      3) Restrained Mechanical Joints

         a) Pacific States Cast Iron Pipe Company, Lock Mechanical Joint.

         b) American Cast Iron Pipe Company, MJ Coupled Joint.

         c) EBBA Iron, Megalug.

   e. Flexible Coupling – For IPS Influent Pipe

      1) Dynamic Moving Joint

      2) Victualic W257

4. Gaskets

   a. Synthetic rubber compound in which the elastomer is nitrile or neoprene, conforming to AWWA C111. Lubricant for push-on joint piping shall be the pipe manufacturer's standard.

5. Bolts and Nuts

   a. Buried, for mechanical joints: Type 304 Stainless Steel.

6. Lining and Coatings

   a. Lining:

      1) Ceramic epoxy lined with Protecto 401 or equal for INF.

2) Cement lined for W.

b. Polyethylene encapsulated per AWWA C105.

E. Polyvinyl Chloride - Pressure (PVC-S)

1. Pipe: less than 4”
2. Fittings: Match pipe, SDR 35, ASTM D3034 or PS 46, ASTM F679.
3. Joints: Bell and Spigot, with reference mark for proper spigot insertion
4. Gasket: Synthetic rubber in compliance with ASTM D3212 and ASTM F477.
5. Installation: In compliance with manufacturer’s instruction and ASTM D2321.
6. Lining and Coatings: None.
7. Provide plastic and magnetic tracer tape.

F. Polyvinyl Chloride - Gravity (PVC-S)

1. Pipe: 4” to 15”, SDR-26, ASTM D3034
2. Pipe: 18” to 36”, PS 46, ASTM F679
3. Fittings: Match pipe, SDR 35, ASTM D3034 or PS 46, ASTM F679.

a) Joints: Elastomeric gasket, ASTM

4. Gasket: Synthetic rubber in compliance with ASTM F477.
5. Installation: In compliance with manufacturer’s instruction and ASTM D2321.
6. Lining and Coatings: None.

G. Polyvinyl Chloride - Pressure (PVC-PF)

1. Pipe and fittings: Plastic underdrain pipe, ASTM F758, Type PS 46 (SDR 35).
2. Joints: Gasketed bell and spigot.
3. Installation: In compliance with manufacturer’s instruction and ASTM D2321.
4. Lining and Coatings: None.

H. High Density Polyethylene Pipe (HDPE)

1. Pipe and fittings for sizes 4-inch diameter and larger:

a. Pipe: Comply with per ANSI/AWWA C906, ASTMJ F714, ASTM D3035.

b. Pressure Rating: DR 17, 125 psi

c. Fittings shall match the pipe SDR pressure rating. All fittings shall be molded and fabricated by the manufacturer.

d. Joints: Join all HDPE pipe and fittings by the heat fusion process per ASTM A2657 and the manufacturer’s specific recommendations.

e. Pipe Compound: PPI TR PE 4710

f. Installation: In compliance with manufacturer’s instruction and ASTM D2321.

g. Lining and Coatings: None.

I. PEX

1. PEX piping shall be PEX-B type.

2. All plumbing piping shall be 5-layer PEX-c with the following layers

   a. Inner PEX-c layer

   b. Adhesive layer

   c. EVOH layer

   d. Adhesive layer

   e. Outer PEX-c layer

3. Piping shall conform to ASTM F876, ASTM F877 and CSA B137.5.

4. Piping shall be NSF certified.

5. Pipe shall be rated for continuous operation of 100 psi gauge pressure at 180°F temperature (690 kPa at 82°C) and 80 psi gauge pressure at 200°F (550 kPa at 93°C.

6. Manufacturers: Zurn or equal.

2.03 MISCELLANEOUS PIPING CONNECTIONS

A. Refer to pipe material specifications for typical pipe joints. Furnish other joint devices where called for on the Drawings, as specified below.

B. Transition Fitting from HDPE to DIP

1. All transition from HDPE pipe to ductile iron shall be made per the approval of Engineer and per the HDPE pipe manufacturer's recommendations and specifications. A molded flange connector adapter within a stainless steel back-up ring assembly shall be used for pipe type transitions. Ductile iron back-up rings shall mate with cast iron flanges per ANSI B16.1.

   a. Transition from HDPE to ductile iron fittings and valves shall be approved by Engineer before installation.

   b. No solid sleeves shall be allowed between such material transitions.

   c. The pipe supplier must certify compliance with the above requirements.

C. Flexible Couplings and Flanged Coupling Adapters (FCAs)

1. Furnish and install flexible couplings and flanged coupling adapters where shown on the Drawings or required by installation.

2. All couplings shall be restrained and suitable for a minimum working pressure of 150 psi.

3. Longitudinal movement and angular defections capabilities shall meet AWWA C219.

4. Materials

   a. Sleeves: Galvanized steel or have a fusion bonded coating suitable for potable water.

   b. Followers: Cast iron, ductile iron, or steel.

   c. Sleeve Bolts: Type 304 SS.

d. Gaskets: Synthetic rubber suitable for potable water.

5. Manufacturers

a. Steel pipe or steel pipe sizes with identical outside diameters: Smith-Blair Type 411; Dresser Style 38; or equal.

b. Cast or ductile iron pipe with identical outside diameters: Smith-Blair Type 441; Dresser Style 138; or equal.

c. Connecting pipes with slightly different outside diameters: Rockwell Type 413 or R441; Dresser Style 62; or equal.

D. Rubber Expansion Joints

1. Type: Built-up single arch expansion joints with full flanges and retainer rings. Provide filled arch type for services with solids.

2. Materials: EDPM cover over reinforced nylon or polyester body and EDPM tube with galvanized steel retainer ring. Cover shall have protective coating where installed outdoors.

3. Pressure and Temperature Rating

a. Up to 12-inch-diameter: 190 psi, 250°F

b. Larger than 12-inch-diameter: 80 psi, 250°F

4. Manufacturers: Proco Series 230; Garlock Style 204HP

5. Provide galvanized steel control rod-compression sleeve assemblies for all rubber expansion joints, except where specifically omitted in Drawings. The number and size of the control rods shall be as required for the test pressure of the pipe system or 50 psi, whichever is greater.

6. Provide full size intermediate metal pipe flanges where rubber spool connects with wafer-style valves, lug-style valve, or other items that do not have full face metal flanges.

2.04 MISCELLANEOUS PIPING ACCESSORIES

A. Dielectric Flange Kits

1. Components

a. Dielectric Gasket: 1/8-inch thick, full faced, phenolic, non-asbestos

b. Bolt Sleeves: 1/32-inch wall thickness

c. Insulating Washers: 1/8-inch thick, phenolic

2. Pressure and Temperature Rating: 175 psi, 210°F

3. Manufacturers

a. PSI;

b. George Fischer;

c. Or equal.

B. Dielectric Unions

1. Connections: Screwed end

2. Pressure and Temperature Rating: 175 psi, 210°F

3. Manufacturers

   a. Epco;

   b. George Fischer;

   c. Or equal.

C. Polyethylene Encasement

1. The surfaces of all buried metallic pipe, fittings, and couplings shall be encased with two sheets of 8-mil minimum thickness polyethylene to form a continuous and all-encompassing layer of polyethylene between the piping and surrounding earth or backfill material.

2. Polyethylene material shall conform to the requirements of AWWA C105. Material shall be 8 mil, linear low density polyethylene (LLDPE) and shall be marked at two foot intervals with manufacturer's name, year of manufacture, AWWA C105, film thickness and material, pipe size, and repair warning.

D. Plastic Warning Tape

1. Provide a single line of plastic warning tape 2.5 feet above the centerline of each buried pipe. Spread tape flat with message side up before backfilling.

2. Print two messages on the tape with bold letters approximately 2" high. Messages shall be repeated at maximum intervals of 2 feet.

   a. First message: CAUTION

   b. Second message: BURIED PIPE BELOW

3. Dimension: 6-inch wide; 0.5 mil thick.

4. Material: Inert plastic material suitable for direct burial.

5. Color: Colors shall meet the APWA Color-Code standard for identification of buried utilities.

6. Manufacturers

   a. Brady;

   b. Seton;

   c. Or equal.

E. Link Seals

1. Where shown on the plans, provide link seals and compatible wall sleeves with weep ring for wall penetrations.

2. Use manufacturers recommended service designation unless noted otherwise.

3. Type: Linked rubber sealing elements and pressure plates tightened together with stainless steel bolts.

4. Manufacturers

   a. Thunderline Corporation;

   b. Calpico;

c. Or equal.

PART 3 - EXECUTION

3.01 INSTALLATION OF PIPE

A. General

1. All pipes shall be carefully placed and supported at the proper lines and grades and, where possible, shall be sloped to permit complete drainage. Piping runs shown on the Drawings shall be followed as closely as possible, except for minor adjustments to avoid architectural and structural features. If major relocations are required, they shall be approved by the Engineer.

2. Wherever a pipe three inches in diameter and larger passes from concrete to earth, two flexible pipe couplings, shall be installed within 1 foot of the concrete. Particular care shall be taken to ensure a full support of the pipe in the earth between and beyond the joints.

3. When installing buried PVC pipe, it shall be "snaked" in the trench. In addition, PVC pipe shall not be laid when temperature is 32°F, or below. Piping shall be installed without springing or forcing the pipe in a manner which would set up stresses in the pipe, valves, or connected equipment.

B. Exposed Pipe

1. Exposed pipe shall mean any pipe not buried or encased in concrete. In erecting exposed pipe a sufficient number of screw unions, flanged or grooved end type joints shall be used to allow any section or run of pipe to be disconnected without taking down adjacent runs. Flanges and grooved couplings shall be employed on pipes 2-1/2 inches and larger. The provision of an adequate number of appropriate take-down fittings must be rigidly adhered to whether or not such fittings are indicated on the Drawings. Take-down fittings shall also be provided within two feet of threaded valves and other appurtenances. Where piping passes through concrete or masonry walls, take-down fittings shall be employed within 3 feet of the wall.

2. All exposed pipelines shall accommodate expansion and contraction forces by the use of expansion joints, anchors, and pipe guides. Where pipes cross structure expansion joints, rubber spherical molded type pipe expansion joints with restraining rods shall be installed whether specifically shown or not.

3. All unrestrained joints in pressure pipelines, including bell and spigot, flexible couplings, expansion joints and flange adapters shall have tension bars (tie rods) provided in accordance with AWWA M11 Design Manual, Figures 19.15 and 19.16, and Tables 19.7 and 19.8. Thrust protection shall be for 1-1/2 times the specified test pressure for the pipe.

C. Buried Pipe

1. General

a. All buried pipes shall be prepared as herein before specified and shall be laid on the prepared granular base and bedded to ensure uniform bearing. No pipe shall be laid in water or when, in the opinion of the

Engineer, trench conditions are unsuitable. Joints shall be made as herein specified for the respective types. Take all precautions necessary to prevent uplift and floating of the pipe prior to backfilling.

b. Piping under slabs and structures shall be encased in concrete unless otherwise directed by the Engineer.

2. Gravity Lines

a. Laying of gravity pipelines shall proceed upgrade with the spigot ends pointing in the direction of flow. Each piece shall be laid true to line and grade and in such manner as to form a close concentric joint with the adjoining pipe and to prevent sudden offsets in the flow line. As the work progresses, the pipe interior shall be cleared of all dirt and debris of every description. Where clearing after laying is difficult because of small pipe size, a suitable swab or squeegee shall be kept in the pipe and pulled forward past each joint immediately after jointing has been completed. Pipe shall not be laid when the condition of the trench or the weather is unsuitable. At times when work is not in progress, open ends of pipe and fittings shall be closed.

3. Corrosion Protection

a. All buried metal parts such as valves and bolt-ups not cement mortar coated shall be coated with two coats of bitumastic in accordance with Section 09 96 00, and encased with two sheet of 8-mil minimum thickness polyethylene to form a continuous and all-encompassing layer of polyethylene between the protected metal and surrounding earth. All polyethylene shall be secured in place with 10-mil polyethylene tape.

4. Dielectric Connections

a. Where pipes of dissimilar metals are connected, a dielectric insulator shall be provided. Where copper pipe is supported from hangers, it shall be insulated from the hangers; or copper plated hangers shall be used.

b. Dielectric insulators shall be installed on the first exposed flanges or couplings of pipes which are connected to buried piping. For this purpose, an insulating joint or connection shall be provided on exposed existing and new piping which requires cathodic protection, within ten feet of each point of burial. Where connections are made between existing ferrous metal piping and new piping, which is to receive cathodic protection, a dielectric insulator shall be installed.

c. Insulating flange gasket sets shall be installed at the specified locations. All insulating components shall be cleaned of all dirt, grease, oil and other foreign materials immediately prior to assembly. Bolt holes in mating flanges shall be properly aligned at the time bolts and insulating sleeves are inserted to prevent damage to the insulation. After flanged bolts have been tightened, each insulating washer shall be inspected for cracks or other damage. All damaged washers shall be replaced. After assembly, resistance between each bolt and flange shall be measured with an approved ohmmeter, and the minimum resistance shall be 50,000 ohms. All insulating flanged joints shall be coated as shown.

d. Insulating unions shall be installed at the specified locations. Joint compound or thread tape shall be applied to male threads only. Piping shall be worked into place without springing or forcing. Backing off to permit alignment of threaded joints will not be permitted. Threads shall be engaged so that no more than 3 threads remain exposed.

5. Locating Wire

a. All runs of water pipe, including services, shall have a No. 10 gauge solid soft drawn copper wire laid along the pipe to facilitate locating the pipe at a later date. The wire shall be stubbed up inside each valve box. Continuity test shall be conducted on each splice at all locations.

3.02 MODIFICATIONS AND CONNECTIONS TO EXISTING PIPING

A. Coordinate with the Owner of the existing pipeline to be connected to prior to making connection.

B. Perform demolition of existing pipelines and yard piping as shown or necessary to make connection. Preserve, in undamaged condition, piping that is to remain and where connections are to be made as part of the Work.

C. Modify and connect to existing piping in accordance with the materials, joint requirements, welding, coatings, linings, and other provisions of this Section. Where specific details are indicated on the Drawings, provide the pipe connections, joints, fittings, and appurtenances as indicated.

D. Coordinate with the Owner to have the pipeline de-energized. Affect lock-out/tag-out procedures as necessary to prevent the accidental use of the pipeline.

E. Carefully cut existing pipe using saws and cutting equipment acceptable to Engineer. Do not torch cut metallic pipe for preparation of pipe at connections.

F. Grind ends of steel pipe to remove corrosion and foreign materials where sleeve couplings are to be installed. Power tool clean and epoxy coat pipe ends prior to assembly for sleeve and grooved end-type couplings.

G. Use pipe fittings for modifications and connections. Do not use saddle-type connections unless specifically indicated on the Drawings.

H. Complete pressure testing and obtain Owner’s approval prior to making connections to existing piping systems, unless otherwise indicated.

3.03 INSTALLATION OF PIPE CONNECTIONS

A. Flexible Couplings and FCAs

1. Prior to installation, thoroughly clean oil, scale, rust, and dirt from the pipe to provide a clean seat for the gasket. Wipe gaskets clean before they are installed.

2. If necessary, flexible couplings and flanged coupling adapter gaskets may be lubricated with soapy water or manufacturer's standard lubricant before installation on the pipe ends.

3. Install in accordance with the manufacturer's instructions and recommendations.

4. Tighten bolts progressively, drawing up bolt on opposite sides a little at a time until all bolts have a uniform tightness. Workers tightening bolts shall be equipped with torque-limiting wrenches.

B. Flexible Expansion Joints

1. Install in accordance with the manufacturer's instructions and recommendations.

2. Connect expansion joints only to full-face metal flanges.

3. Install control rod-compression sleeve assemblies with control rod nuts snug, to relieve stress on adjacent pipe, except at buried locations. Comply with manufacturer’s instructions.

4. Paint buried galvanized steel retainer rings, bolts and other appurtenances in accordance with Section 09 96 00.

3.04 INSTALLATION OF PIPE ACCESSORIES

A. Polyethylene Encasement

1. All polyethylene encasements shall be secured in place with 10-mil polyvinyl tape. Installation shall conform to requirements of AWWA C105, Method A. Excess slack width in the polyethylene tube shall be taken up to make a snug, but not a tight fit, and secured with an adhesive tape wrapping around the pipe at the quarter points of each pipe length.

2. Any rips, punctures or other damage to the polyethylene sleeve shall be repaired with two layers of adhesive tape or a short length of polyethylene tube cut open, wrapped around the pipe, and secured in place.

3.05 INSTALLATION OF THERMAL INSULATION

A. General

1. Apply over clean, dry surfaces.

2. For double layer insulation, where specified or required to achieve the specified surface temperature, provide with staggered section joints.

B. Pipe Supports and Shields

1. Unless otherwise specified, provide thermal pipe hanger shields install during pipe support installation.

2. Where thermal pipe hanger shields are used, apply 3” wide vapor barrier tape or band over the butt joints.

C. Protection

1. Protect insulation and jackets from crushing, denting, and similar damage during construction.

2. Do not penetrate or otherwise damage vapor barriers.

3. If insulation, jacket, and vapor barriers are damaged during construction, then remove damage material and install new material.

D. Piping Insulation

1. Continuously insulate along entire length including all in-line devices such as valves, fittings, flanges, couplings, strainers and other piping appurtenances.

2. Unless otherwise specified, provide with aluminum jackets.

3. Butt firmly together and provide jacket laps and joint strips with lap adhesive.

4. Provide jackets with their seams located on the underside of pipe.

5. Except for flexible blanket type, seal insulation ends with end joint strips and held in place by waterproof adhesive.

E. Fittings, Connections, Flanges and Valves:

1. Except where soft covers are specified, provide rigid insulation with rigid aluminum covers.

2. Mechanically secure by corrosion-resistant tacks pushed into the overlapping throat joint.

3. Overlap the adjoining pipe insulation and jackets.

4. Provide with their seams located on the underside of fittings and valves.

F. Flashing

1. Provide at jacket penetrations and terminations. Provide clearance for flashing between insulation system and piping supports.

2. Sealant

a. Trowel a heavy tack coat of sealant over the insulation, extending over the jacket edge 1-inch and over the pipe or protrusion 2 inches.

b. Stretch reinforcement over the tack coat after clipping to fit over pipe and jacket.

c. Strap clipped reinforcing with a continuous band of reinforcing to prevent curling.

d. Trowel sealant over the reinforcement to a minimum thickness of 1/8--inch.

3. Provide aluminum caps, formed to fit, over the adjacent jacketing and to completely cover coated insulation. Hold cap in place with a jacket strap.

3.06 CLEANING

A. The interior of all pipelines shall be thoroughly cleaned of all dirt, loose scale, sand, and all foreign material prior to connection of pipe to equipment, control and regulating devices, and instrumentation and prior to testing. Pump suction lines shall be cleaned prior to operation of pumps.

B. Cleaning shall be accomplished by flushing with water at a velocity of at least 3 feet per second or by pulling a tightly fitting cleaning ball or swab through the pipe.

C. No test shall commence until the pipeline is completely cleaned to the satisfaction of the Engineer.

3.07 FIELD TESTING

A. All pipelines installed in this project shall be subject to field and acceptance tests as specified in Section 40 80 02.

END OF SECTION

SECTION 40 05 51

GENERAL REQUIREMENTS FOR VALVES

PART 1 - GENERAL

1.01 SECTION INCLUDES

A. Requirements for valves.

1.02 REFERENCED SECTIONS

A. The following Sections are referenced in this Section:

1. Section 01 33 00 – Submittals
2. Section 40 05 10 – Piping Systems

1.03 SUBMITTALS

A. Comply with Section 01 33 00.

B. Provide the following information, at a minimum:

1. Shop drawings
   a. Valves and actuators
2. A schedule of valves indicating the label location, attachment method, and proposed label text for each valve.
3. A schedule of responsible manufacturers for the project and contact information, planned site visits, and compliance tests to be performed.
4. Design calculations, test and performance data, and other information required to substantiate that the valve units proposed will meet the performance requirements specified and shown.
5. Protective Coatings: Manufacturer's data.

1.04 DEFINITIONS

A. Responsible Manufacturer: Manufacturer or manufacturer's representative who will ensure satisfactory performance of equipment.

B. Valve: Device for mechanically regulating pipeline flow.

C. Actuator: Devices added to obtain mechanical advantage or power assist in operation.

1.05 RESPONSIBLE MANUFACTURER

A. Furnish, adjust, test, and ensure satisfactory performance of each valve.

B. Provide any field adjustments, settings, and tests required for satisfactory performance of each valve at no additional cost to Owner.

1.06 QUALITY ASSURANCE

A. Factory test one valve of each type supplied for a particular service for valves less than 4" in diameter. For all other valves, test each valve.

1. Test steel-bodied valves hydrostatically per ANSI B16.5

2. Test aluminum-, bronze- and brass-bodied valves hydrostatically at double the maximum pressure specified.

3. Leakage, sweating or visible deformation at any point on the valve is cause for rejection of valves of that type and manufacturer.

B. Submit a certified copy of the pressure test reports for all valves over 12 inches in nominal size prior to shipping valves to the site. Format these test press er the requirements of the applicable reference standards.

C. Storage and Preparation for Installation

1. Package and store valves to prevent exposure to sunlight, chemical exposure, and atmospheric pollution.

2. Inspect each valve prior to installation for damage. Repair any damage to seats, machined surfaces, or protective coatings before installation. Clean each valve to remove any dirt and debris from the interior surfaces and seat areas. Install valves in the closed position.

3. Some valves must be installed with seats or seat adjustment rings on the downstream side of the valve. Determine these requirements prior to installation and install the valve in the correct orientation.

PART 2 - PRODUCTS

2.01 GENERAL

A. Provide valves, gates, actuators, stem extensions, and other accessories as indicated on the Drawings or specified. All valves shall be new and of current design. For valves of the same type, provide identical valves supplied by a single manufacturer.

B. Provide valves and actuators with the name of the manufacturer, nominal size, flow direction arrow, design working pressure, and the reference standard cast in raised letters or indelibly marked on an appropriate part of the body.

C. Provide buried valves with valve boxes and covers where indicated.

D. Flanges, gaskets, and bolts for valves: in accordance with Section 40 05 10.

E. Unless otherwise specified, all interior bronze parts of valves shall conform to the requirements of ASTM B62.

F. Wetted parts shall be lead-free as defined by Oregon Health Authority, US EPA, or the most stringent of current regulations.

2.02 PROTECTIVE COATINGS

A. Coat ferrous surfaces in water passages of all valves of size 2 inches and larger and exterior surfaces of valves and actuators, with epoxy per AWWA C550, unless otherwise specified in the valve specification.

1. Interior Surfaces:

a. Minimum dry film thickness: 8 mil

b. NSF/ANSI 61 approved.

2. Exterior Surfaces:

a. Above ground:

1) Minimum dry film thickness: 8 mil

b. Buried, submerged or in blow ground vaults:

1) Minimum dry film thickness: 12 mil

B. Do not coat flange faces or bronze and stainless steel surfaces in water passages.

C. Coat exterior bronze and stainless steel surfaces using the same system as the associated piping.

D. Provide holiday-free protective coatings.

2.03 VALVE ACTUATORS

A. Furnish valves and gates with an actuator as indicated in the valve Technical Specification.

B. Assemble valve actuators to the valve, adjust, and test the completed unit by Responsible Manufacturer prior to shipment to the Site.

PART 3 - EXECUTION

3.01 VALVE INSTALLATION

A. Install valves per the manufacturer's written instructions and as indicated on the Drawings and specified.

B. Fit, support and brace gates to prevent warping, binding, and bending under all operating conditions. Accurately position and support embedded parts cast into concrete during concrete placement.

C. Assembly of Valves and Piping

1. Install valves with piping per Section 40 05 10 and per this Section.

2. Install valves with piping prior to the assembled piping or attached supports being cast into concrete or attached to supports.

3. Sequence construction and operations so that the adjacent piping supports the valves, and so that the valves do not support the piping. Where permanent supports are located at valves, install the supports after the piping and valves have been installed as a completed assembly on temporary supports.

4. Install piping and valve assemblies so that the piping does not exert forces on the valves from settlement or assembly operations.

5. Correct piping alignment deviations before the valve is joined to the piping.

6. Unless shown otherwise, install butterfly, plug, and ball valves with the shafts in the horizontal position.

7. Install gates, gate valves, and other types of valves with the stems in the vertical position.

8. For manually operated valves 3 inches in nominal size and smaller, orient the valve operators and indicators to be visible to the operator.

D. Install floor boxes, valve boxes, extension stems, and floor stands vertically centered over the operating nut, with couplings as required. Adjust the elevation of the box top to conform with the elevation of the finished floor, grade, or pavement at the completion of the Work. Support boxes and stem guides during concrete placement to maintain vertical alignment and proper orientation.

3.02 TESTING

A. Pressure test valves as part of the pipeline testing. Demonstrate valve operation (open/close) after the valve is installed including valve box and riser, as appropriate.

B. Following installation, Owner may conduct holiday test for valves larger than 30-inch.

END OF SECTION

SECTION 40 05 57.13

MANUAL VALVE AND GATE OPERATORS AND OPERATOR APPURTENANCES

PART 1 - GENERAL

1.01 SECTION INCLUDES

A. Manual operators for valves and gates, and operator appurtenances.

B. Contractor shall provide all tools, supplies, materials, equipment, and labor necessary for furnishing, installing, adjusting, and testing of valve actuators.

C. Provide manual operators as indicated on the Plans.

1.02 REFERENCED SECTIONS

A. The following Sections are referenced in this Section:

1. Section 01 33 00 – Submittals
2. Section 40 05 10 Piping Systems
3. Section 40 05 51 – General Requirements for Valves

1.03 SUBMITTALS

A. Comply with Section 01 33 00 and include information as noted below.

B. Manufacturer's catalog information and other data confirming conformance to design and material requirements.

C. Submit shop drawings for actuators as part of the submittals for the associated valves in accordance with Section 40 05 60.

D. Submit design calculations showing the required valve operation torques and the design torque provided by each actuator.

PART 2 - PRODUCTS

2.01 GENERAL

A. Supplier shall supply and mount all actuators, including any type of manual or powered actuators, on the valves at the factory. Each valve and actuator shall be shipped as a unit.

B. Each actuator shall have sufficient torque capacity and features to seat, unseat, and rigidly hold in any intermediate position the valve it controls under the operating conditions for the valve.

C. Provide each actuator with an externally mounted mechanical valve position indicator.

D. Each valve body or operator shall have cast thereon the word "OPEN", an arrow indicating the direction to open, and flow direction arrows.

2.02 OPERATORS

A. General:

1. Unless otherwise indicated, nonburied valves shall have an operating wheel, on the actuator. Buried valves shall have AWWA 2-inch operating nuts and non-rising stems. Unless specified otherwise, the direction of rotation of the operator shall be counterclockwise for opening.

B. Wrench Nuts, Boxes, and Guides:

1. Wrench nuts shall comply with Section 3.15 of AWWA C500. A minimum of two operating keys, but no fewer than 1 key per every 10 valves, shall be provided for operation of the wrench nut operated valves.

C. Gear Actuators

1. Unless otherwise noted, gear actuators shall be provided for the following.

   a. Valves larger than 12 inches in nominal size

   b. Buried valves that have the operating shaft mounted horizontally

   c. Where specified or shown

   d. Where a lever or wheel operator effort would otherwise be greater than 60 foot -pounds of torque or 60 pounds of force at the rim of the wheel or lever

2. Gear actuators shall be of the worm or helical gear type with the output shaft perpendicular to the valve shaft and a removable hand wheel mounted on the output shaft. Except as required herein, the gear actuators shall conform to AWWA C504 and shall be certified.

3. Actuators shall be capable of being removed from the valve without dismantling the valve or removing the valve from the line.

4. Gearing shall be machine-cut steel designed for smooth operation. Bearings shall be permanently lubricated, with bronze bearing bushings provided to take all thrusts and seals and to contain lubricants. Housings shall be sealed to exclude moisture and dirt, allow the reduction mechanisms to operate in lubricant, and be of the same material as the valve body.

5. Manual input effort to the handwheel shall be a maximum of 40 foot pounds for operating the valve from full open to full close, under any operating conditions. Gear operators shall indicate valve position and have adjustable stops. Maximum handwheel size shall be 24 inches in diameter. Minimum handwheel size shall be 12 inches.

2.03 OPERATOR APPURTENANCES

A. Valve Boxes:

1. Valve boxes shall be cast iron and shall have suitable base castings to fit properly over the bonnets of their respective valves and heavy top sections with stay-put covers. Covers shall be hot-dip galvanized.

B. Floor Boxes:

1. Floor boxes shall be hot-dip galvanized. Where the operating nut is in the concrete slab, the floor box shall be bronze bushed. Where the operating nut is below slab, the opening in the bottom of the box shall be sufficient for passage of the operating key. Floor boxes for operating nuts recessed in concrete shall be standard cast iron boxes cast into the concrete, with fastening top by Clow, or equal.

C. Adjustable Shaft Valve Boxes:

1. Adjustable shaft valve boxes shall be concrete or cast iron Brooks No. 3RT, Christie G5, Empire 7-1/2 valve extension box, or equal. Box covers on water lines shall be impressed with the letter "W". Gas line covers shall be impressed with the letter "G".

D. Stem Guides

1. Stem guides shall be of the adjustable wall bracket type, bronze bushed, with maximum spacing of 10 feet as manufactured by Clow, Rodney Hunt, or equal. Extended operating stems shall have universal joints and pin couplings if longer than 10 feet and a rating of at least five times the maximum operating torque.

PART 3 - EXECUTION

3.01 GENERAL

A. Installation shall be as specified herein. Valve operators shall be located so that they are readily accessible for operation and maintenance. Valve operators shall be mounted for unobstructed access, but mounting shall not obstruct walkways. Valve operators shall not be mounted where shock or vibration will impair their operation. Support systems shall not be attached to handrails, process piping, or mechanical equipment.

3.02 OPERATORS

A. General:

1. Valves and gates shall be provided with manual operators, unless specified otherwise. Where possible, manual operators shall be located between 48" and 60" above the floor or a permanent work platform.

B. Wrench Nuts:

1. Wrench nuts shall be provided on buried valves, on valves which are to be operated through floor boxes, and where specified. Extended wrench nuts shall be provided if necessary so that the nut will be within 6" of the valve box cover.

3.03 OPERATOR APPURTENANCES

A. Valve Boxes:

1. Valve boxes extending to finished surfaces shall be provided for buried valves.

B. Floor Boxes:

1. Floor boxes shall be provided for wrench operation of valves located below concrete slabs. Each floor box and cover shall be of the depth required for installation in the slab.

END OF SECTION

SECTION 40 05 57.23

POWERED VALVE OPERATORS AND OPERATOR APPURTENANCES

PART 1 - GENERAL

1.01 SECTION INCLUDES

A. Powered operators for valves and operator appurtenances.

B. Electric Actuator Schedule

Valve or Gate					Actuator			
Location	Type	Size, Inches	Service	Operating Press., ft	Type(1)	Tag No.	Hazardous Area	Dwg Ref
Influent Pump Station	Slide Gate	36	INF	20	EMTT	SLG-110-01	Yes	M-110
(1) See Paragraph 3.04								

1.02 REFERENCED SECTIONS

A. The following Sections are referenced in this Section

1. Section 01 33 00 – Submittals
2. Section 01 66 00 – Product Requirements
3. Section 01 78 23 – Operation Maintenance and Information
4. Section 01 78 36 – Warranties and Bonds
5. Section 01 79 00 – Training
6. Section 01 81 00 – Equipment and System Testing
7. Section 01 99 00 – Reference Forms
8. Section 46 05 13 – General Requirements for Equipment

1.03 DEFINITIONS

A. For use in control valve schedules in other sections and in this section, powered operators are defined as follows:

Operator (OPSPEC) Type	Service	Definition
EMTI	Isolating	Electric motor multi-turn
EMTT	Throttling	Electric motor multi-turn

1.04 SUBMITTALS

A. Comply with Section 01 33 00.

B. Include the following items:

1. Electrical power and control wiring diagrams for electric motor operators marked to show specific changes necessary for the supplied equipment. If no changes are required, the drawing shall be marked “No Changes Required.”

2. Manufacturer's catalog information and other data confirming conformance to design and material requirements.

3. Operating and maintenance information specified in Section 01 78 23.

1.05 QUALITY ASSURANCE

A. Unit Responsibility

1. The valve and/or gate manufacturer shall have unit responsibility, as specified in Section 46 05 13, for equipment, accessories, appurtenances, an power operated actuator. Actuator shall be mounted on valve and/or gate and tested as a unit at the factory.

B. ISO 9001 Quality System

1. Compliance by pump manufacturer is required.

2. Submit documentation of compliance prepared by independent certification agency approved by International Organization for Standardization.

3. Do not ship equipment before compliance documentation review has been completed.

1.06 PRODUCT SHIPMENT, PROTECTION, AND STORAGE

A. Comply with Section 01 66 00.

1.07 WARRANTY

A. Comply with Section 01 78 36.

PART 2 - PRODUCTS

2.01 MANUFACTURERS

A. One of the following:

1. AUMA

2. Rotork IQ series

3. Limitorque MX series

B. Modify equipment if necessary, to comply with this Section.

2.02 COMPONENTS

A. General

1. Size operators to produce an operating torque equal to 1.5 the maximum required valve operating torque under the specified flow conditions.

2. Factory-mount on the valve or gate and provide as a unit.

3. On each valve body or operator cast the word "OPEN", an arrow indicating the direction to open, and flow direction arrows.

4. Specific requirements for each type of powered operator are specified in OPSPEC sheets at the end of this Section.

B. Motor

1. Design specifically for valve or gate actuator service and be of totally enclosed, non-ventilated construction.
2. Suitable for use with 460V, three phase, 60 Hz power.
3. Rate for 15-minute duty and provide with NEMA Class F insulation.
4. Embed thermostat for thermal protection in the motor windings.
5. Minimum Size: As sized by the manufacturer for valve type and service conditions specified, but not more than the size listed in the Electric Actuator Schedule.
6. Motors for throttling (modulating) service shall be designed for 1200 start-per-hour (S4, Class C).
7. Motors in Hazardous Areas shall be explosion proof.

C. Enclosures

1. Rate motor and all electrical enclosures for NEMA 6/IP68.
2. In hazardous areas, rate enclosures for both NEMA 6/IP68 and NEMA 7 Class 1 Div 1 Groups C and D.
3. Enclosure standard: double o-ring sealed to prevent moisture ingress through conduit entry.
4. Local control knobs shall not penetrate actuator housing.

D. Motor Starter

1. Provide with a three phase full voltage reversing starter with overload elements in each of the three poles.

E. Gearing

1. Totally enclose the actuator gearing in an oil-filled gearcase suitable for operation at any angle.
2. Manufacture all drive gearing and components of metal and incorporate a lost-motion hammer blow feature.
3. For rising spindle valves provide a hollow output shaft to accept a rising stem, and incorporate ball or roller thrust bearings at the base of the actuator.
4. Design to permit the opening of the gearcase for inspection or disassembly without releasing the stem thrust or taking the valve out of service.

F. Torque Switch

1. Use solid-state non-contacting electronic means capable of displaying torque percentage on local LCD display.
2. Set point to be determined by valve manufacturer.
3. Permit settings, adjustments, calibration, diagnostics, and datalog file extraction to be accomplished without opening any electrical compartment.
4. Provide PC/PDA compatible software to allow the Owner to perform diagnostics, save operational history and save torque profiles.

G. Manual Operator

1. Provide with a handwheel for manual operation.
2. Design so handwheel does not rotate during motor operation and so a locked motor or locked gearing does not prevent manual operation.
3. For rising stem valves and gates, do not share any gearing with the motor.
4. Provide motor or manual selection using a positive lockable declutching lever which will disengage the motor and motor gearing mechanically but not electrically. Plastic declutch levers are not acceptable.
5. Design to prevent simultaneous operation in manual and motor modes.
6. Design to limit rim effort to 80 lbs of rim effort at maximum torque.

H. Hammer Blow Device

1. Provide with a built-in lost-motion device that allows sufficient travel of the worm gear, prior to engaging the stem nut, for the motor to reach full speed.
2. Through this action, impart a “hammer blow” to start the valve or gate in motion in either direction.
3. Share load equally by two lugs cast integrally on the drive sleeve.
4. Delete hammer blow feature from modulating duty operators.

I. Position Sensing and Remote Indication

1. Sense position without the use of switches via an absolute encoder with no more than four moving parts which has built in redundancy should one of the four parts fail in any way or a similar device. Display position on the LCD as open limit, closed limit, or 1-99% open in 1/10% increments.
2. Provide four software configurable indication contacts as shown in the OPSPEC sheets.
3. Local position display and indication contacts shall update even during loss of main power. External control power shall not be necessary to achieve this.

PART 3 - EXECUTION

3.01 INSTALLATION

A. General

1. Locate operators so that they are readily accessible for operation and maintenance.
2. Mount for unobstructed access, but do not obstruct walkways.
3. Do not mount where shock or vibration will impair operation.
4. Do not attach support systems to handrails, process piping, or mechanical equipment.
5. Locate manual operating accessory, where possible, between 48” and 60” above the floor or a permanent work platform.

B. Identification Tags

1. Provide each powered operator with a 16-gage stainless steel identification tag.
2. Inscribe complete equipment number of the operator.
3. Characters: 1/4”, die-stamped.
4. Securely attach to the operator in a readily visible location using stainless steel screws or wire.

C. Electrical Power and Signal Wiring and Equipment

1. Comply with Division 16.

3.02 MANUFACTURER’S FIELD SERVICES

A. Provide field inspection and instruction services by factory-trained service technician of the manufacturer as specified in Sections 01 79 00 and 01 81 00. Services by a sales representative are not acceptable.

1. Provide minimum one (1) visit of 8 hours, excluding travel time, to inspect and test initial operation, and make necessary adjustments.
2. Provide minimum one (1) visit of 8 hours, excluding travel time, to train plant operators.
3. Include one follow up training and troubleshooting session as specified in Section 01 79 00.

B. Complete and submit the following forms in Section 01 99 00:

1. Manufacturers Installation Certification Form
2. Manufacturers Instruction Certification Form

3.03 DEMONSTRATION

A. Comply with Section 01 81 50.

3.04 OPERATOR SPECIFICATION (OPSPEC) SHEETS

A. The following OPSPEC sheets are included in this section: EMTI, EMTT.

Operator Type	EMTI
Description	Electric Multi-turn Isolation valve operator
Construction	AUMA, Rotork IQT or Limitorque Accutronix MX with HBC gearbox, modified to meet the requirements specified in this section.
Gear box	90º gear operator.
Controller	Nonfused disconnect type combination starter in compliance with NEMA ICS.
Controls	1. Control power: Provide by an integral 120 volts AC, single-phase control transformer unless a separate power source is shown on the electrical drawings. 2. Size transformer to operate at not more than 80% of rating with the connected load shown: Include protective secondary fusing. 3. Provide with an integral control station. a. Include ”Local/Stop/Remote” toggle switch and “Open/Close” toggle switch. “Local/Stop/Remote” shall accept standard 1/4” padlock to lock in either position. b. Momentary operation of the “OPEN” or “CLOSE” toggle: Causes the operator to drive the valve or gate to the appropriate limit. Software configuration shall allow push-to-run operation where desirable. c. Momentary operation of the “STOP” pushbutton: Causes the operator to stop. d. Provide terminals for remote “OPEN” and “CLOSE” pushbuttons.
Remote Valve Position/ Actuator Status indication:	1. Provide four contacts (expandable to twelve) which can be selected to indicate any position of the valve or gate. a. Provide for the selection of a normally closed or open contact form. b. Maintain and update position indication during handwheel operation when all external power to the actuator is isolated. c. Rate at 5A, 120V AC, 30V DC. 2. As an alternative to providing valve position, configure so any of the four above contacts may be selected to signal one of the following: a. Valve opening, closing or moving b. Thermostat tripped, lost phase c. Motor tripped on torque in mid travel, motor stalled d. Remote selected e. Actuator being operated by handwheel

Operator Type	EMTT
Description	Electric Multi-Turn Throttling valve operator
Construction	Rotork IQTM or Limitorque Accutronix MX with HBC gearbox and SSMR, modified to meet the requirements specified in this section.
Gear box	90º gear operator.
Controller	1. Provide a solid-state electronic, servo-amplifier comparator and a solid state Triac starting circuit. 2. Accept an external 4- to 20-mA DC isolated position input signal into a maximum load of 250 ohms. 3. Generate a position feedback signal off the indication of an absolute encoder with no more than four moving parts which has built in redundancy should one of the four parts fail in any way 4. Compare the input signal with the feedback signal to produce an error signal. 5. Cause the motor to move the valve or gate in a direction so as to reduce the magnitude of the error signal. 6. Positioning accuracy: Plus or minus 1/10% of travel or better. 7. Operating speeds: 12 in/min for linear operators and 180º per minute for rotary operators. 8. Equivalent to Rotork IQTM.
Controls	1. Control power: Provide by an integral 120 volts AC, single-phase control transformer unless a separate power source is shown on the electrical drawings. 2. Size transformer to operate at not more than 80% of rating with the connected load shown: Include protective secondary fusing. 3. Provide with an integral control station. a. Include “Local/Stop/Remote” toggle switch and “Open/Close” toggle switch. “Local/Stop/Remote” shall accept standard 1/4” padlock to lock in either position. b. Momentary operation of the “OPEN” or “CLOSE” toggle: Causes the operator to drive the valve or gate to the appropriate limit. Software configuration shall allow push-to-run operation where desirable. c. Momentary operation of the “STOP” pushbutton: Causes the operator to stop. d. Provide terminals for remote “OPEN” and “CLOSE” pushbuttons.

END OF SECTION

(THIS PAGE LEFT BLANK INTENTIONALLY)

SECTION 40 05 60

VALVES AND APPURTENANCES

PART 1 - GENERAL

1.01 SECTION INCLUDES

A. Furnish and install valves and appurtenances as shown on the Drawings and described in the Specifications, as required to interconnect with equipment and piping for a complete and operable system.

1.02 REFERENCED SECTIONS

A. The following Sections are referenced in this Section:

1. Section 01 33 00 – Submittal Requirements
2. Section 09 96 00 – High Performance Coating
3. Section 10 14 13 – Piping and Valve Identification Systems
4. Section 40 05 57.13 – Manual Valve and Gate Operators and Accessories
5. Section 40 05 57.23 – Powered Valve Operators and Operator Appurtenances
6. Division 40 – Process Interconnections

1.03 REFERENCES

A. ANSI – American National Standards Institute

B. ASTM – American Society for Testing and Materials

C. AASHTO – American Association of State Highway Transportation Officials

D. AWWA – American Water Works Association

E. NSF – National Sanitation Foundation

1.04 SUBMITTALS

A. Comply with Section 01 33 00.

B. Shop Drawings:

1. Manufacturer's catalog information including product data, details of construction and materials list.
2. Shop drawings showing dimensions, cross-sectional view and weight
3. Data: Submit test reports certifying that manufacturer has performed adequate testing prior to shipment on site.
4. Operation and Maintenance Data: Submit in accordance with Section 01 78 23.

C. Protective Coatings: Manufacturer's data

D. A schedule of valves indicating the label location, attachment method, and proposed label text for each valve.

E. Certifications:

1. Submit certifications to demonstrate compliance with Paragraph 2.01.A (e.g., NSF 61 certification). Quality Assurance

1.05 QUALITY ASSURANCE

A. Factory test one valve of each type supplied for a particular service for valves of diameter less than 4”.

B. Test steel-bodied valves hydrostatically per ANSI B16.5

C. Test aluminum-, bronze- and brass-bodied valves hydrostatically at double the maximum pressure specified.

D. Leakage, sweating or visible deformation at any point on the valve is cause for rejection of valves of that type and manufacturer.

E. Submit a certified copy of the pressure test reports for all valves over 12 inches in nominal size prior to shipping valves to the site. Format these test press er the requirements of the applicable reference standards.

F. For gate valves, demonstrate Compliance with Referenced Standard:

1. Testing records per Section 5 of AWWA C509.

2. Affidavit of compliance with AWWA C509.

1.06 STORAGE AND PREPARATION FOR INSTALLATION

A. Package and store valves to prevent exposure to sunlight, chemical exposure, and atmospheric pollution.

B. Inspect each valve prior to installation for damage. Repair any damage to seats, machined surfaces, or protective coatings before installation. Clean each valve to remove any dirt and debris from the interior surfaces and seat areas. Install valves in the closed position.

C. Some valves must be installed with seats or seat adjustment rings on the downstream side of the valve. Determine these requirements prior to installation and install the valve in the correct orientation.

PART 2 - PRODUCTS

2.01 GENERAL REQUIREMENTS

A. All valves of each type shall be the product of one manufacturer.

B. Valves shall be complete with all necessary operating hand wheels, chain wheels, extension stems, valve boxes, floor stands, worm and gear operators, operating nuts, chains, hardware and fasteners, and wrenches which are required for the proper completion of the work included under this section.

C. Valves shall be furnished full line size unless specifically called out to be of reduced size. Unless otherwise specified, valves shall be rated for 150 psi working pressure minimum.

D. All exposed valves shall be furnished with operators, handwheels, levers, or other suitable type wrench including handles as specified herein or as shown on the Drawings.

E. Valves 4-inch and larger located more than 7 feet above the floor level shall be furnished with chain operators. Chains shall be galvanized and shall extend to within 3 feet of the floor. Provide hook so that chain may be stored clear of walkways. All buried valves shall be provided with 2-inch-square operating nut and valve boxes.

F. For all buried valves provide valve boxes and extended stems to within 6 inches of finished grade.

G. Unless otherwise indicated, the direction of rotation of the wheel, wrench nut or lever to open the valve shall be counterclockwise.

H. All exposed valves and valve operators shall have a non-bleeding shop coat, unless otherwise specified.

I. All materials in contact with the potable water, process water to be treated to potable water, or liquids (e.g., chemicals) to be added to the process/potable water shall be lead-free and shall meet the requirements of California Code of Regulations Title 22 Chapter 16 Article 7 regarding direct and indirect additives.

J. Unless otherwise specified, all interior bronze parts of valves shall conform to the requirements of ASTM B62.

K. Wetted parts shall be lead-free as defined by Oregon Health Authority, US EPA, or the most stringent of current regulations.

2.02 BUTTERFLY VALVES

A. Manufacturers

1. Pratt, 2FII or XR70;
2. Crispin, K-Flo;
3. DeZurik BAW;
4. Or equal.

B. Design

1. Manufactured in accordance with AWWA C504, except where otherwise specified herein.
2. Pressure Class: 150B.
3. Type: Short body flanged.
4. Disc: Lens-shaped design.
5. Seats: One-piece construction, molded and bonded into the recessed cavity of the valve body. Cartridge type seats with retaining rings are not acceptable.

C. Valve Diameter: Internal diameter of valve at the throat shall be no less than the nominal diameter of the valve less 1-1/2 inches.

D. Materials

1. Shaft: Stainless steel, ASTM A276, Type 304.

2. Disc: Ductile iron, ASTM A536; or cast iron, ASTM A48, Class 40; or cast iron, ASTM A126, Class B; or stainless steel, ASTM A276, Type 316.

3. Disc Edge: Stainless steel, ASTM A276, Type 316.

4. Seat: Buna-N.

5. Body: Cast iron, ASTM A126, Class B.

E. Finish

1. Exposed Exterior: Shop prime compatible with field applied finish coats. Refer to Section 09 96 00.

2. Buried Exterior: Shop coat with high-solids epoxy, 12 mils minimum.

3. Interior: Shop line with two-component, high solids epoxy, AWWA C550.

2.03 RESILIENT SEATED GATE VALVES

A. General Requirements:

1. Use resilient seated type gate valves for valves 3-inches in nominal size and larger.

2. Pressure Ratings:

a. Valves less than 16 inches in nominal size: 200 psi.

b. Valves 16-inch and larger: 150 psi.

3. Type:

a. Exposed Gate Valves: Rising stem type with stem yoke.

b. Buried Gate Valves: Non-rising stem type.

B. Manufacturers: One of the following, or equal:

1. American Darling

2. M&H / Kennedy Valve Company, Model KS-RW.

3. Clow Corporation

4. Mueller Company, 2360 Series.

5. AVK

C. Valve Design:

1. Body, Bonnet, and Wedge: Cast iron conforming to ASTM A126, Class B.

2. Wedge: Fully encapsulated with SBR rubber conforming to ASTM D5000 and meeting rubber-to-metal bond tests specified in ASTM D249.

3. End Connections: Unless otherwise indicated on the Drawings, provide valves with the following end connections:

a. Exposed Gate Valves: Flanged ends conforming to ANSI B16.5.

b. Buried Gate Valves: Mechanical joint or push-on ends.

4. Stem: Cast bronze with integral collars.

5. Stem Packing:

a. Rising stem valves: Teflon braid packing in a stuffing box.

b. Non-rising stem valves: Provide with double or triple o-ring stem seals or with braided packing material.

6. Operator Extension: As indicated on the Drawings.

D. Valve Actuator:

1. Exposed Gate Valves: Provide valve with manual handwheel actuator unless a powered actuator is indicated on the Drawings.

a. Valves 8-inch in Nominal Size and Larger: Provide geared type actuator.

2. Buried Gate Valves: AWWA operating nut on a shaft that extends to within 6 inches below finished grade. Support shaft at 5 foot intervals with the last support just below the operating nut. Provide 42-inch long operating wrench.

3. Operation: Counter clock-wise to open.

E. Coating:

1. Coat interior and exterior of valve body and bonnet with fusion bonded epoxy.

a. Fusion bonded epoxy: Complying with AWWA C550 and NSF/ANSI 61 approved.

2.04 METAL SEATED GATE VALVES

A. Use metal seated type gate valves for valves less than 3-inces in nominal size.

B. Gate Valves Smaller than 3 inches in Nominal Size:

1. Non-rising stem type valve with bronze body, solids wedge disc, screw-in bonnet with PTFE packing.

2. Pressure Rating: 125 psi.

3. Valve Ends: Threaded in accordance with ASME B1.20.1.

4. Coating: Standard factory finish.

C. Manufacturers: One of the following or equal:

1. Crane Company 1700 Series.

2. Jenkins, Figure 47.

3. Mueller H10914.

2.05 BALL VALVES

A. Bronze: Two piece regular port

1. Rating: 600 psi CWP

2. Type: Lever.

3. Connections: Threaded.

4. Materials: Lead-free Bronze body, Zinc-plated steel lever nut, lead free brass stem, RPTFE seat, lead free brass ball, chrome plated, stem packing MPTFE, steel lever, zin-plated with vinyl grit

5. Manufacturers: Apollo 70LF-100 or equal.

B. PVC: full port Tru union type

1. Rating: 250 psi
2. Type: Handle
3. Connections: Threaded or socket
4. Materials: PVC or CPVC Body, FPM or EDPM Seal, Teflon seat, double o-ring stem seal.
5. Installation: Use suitable solvent weld products
6. Manufacturer: Hayward TBH series or equal

2.06 SWING CHECK VALVE

A. Manufacturers

1. Dezurik/Apco Series 6000
2. Equivalent by Golden Anderson
3. Or equal.

B. Design

1. Full waterway, self-aligning disc
2. Pressure Rating: 250 CWP psi
3. Connections: Flanged, 125-pound ANSI.
4. Lever and weight closure control

C. Materials: Ductile iron body and cover, ductile iron disk, stainless steel pivot shafts, stainless steel trim

2.07 AIR RELEASE VALVE – CLEAN WATER

A. Manufacturers

1. Dezurik;
2. Equivalent by Valmatic;
3. Or equal.

B. Design

1. Function: Releases accumulated air under pressure at pipeline high points.
2. Pressure Rating: 150 psi
3. Body style 200 with compound lever.

C. Materials: Cast or ductile iron body; stainless steel float, needle and linkage, Buna-N seat

2.08 COMBINATION AIR RELEASE/AIR VACUUM VALVE – WASTEWATER – (2”)

A. Manufacturers

1. Dezurik Series 145C
2. Equivalent by Valmatic
3. Or equal

B. Design:

1. Releases accumulated air under pressure at pipeline high point.
2. Single body, NPT output, double orifice
3. Pressure rating: 150 psi

C. Materials: Cast or ductile iron body, stainless steel float. Standard epoxy coated

D. Mushroom cap for outlet

2.09 COMBINATION AIR RELEASE/AIR VACUUM VALVE – WASTEWATER – (4")

A. Manufacturers

1. APCO 1800
2. Valmatic 48A/304
3. Or equal

B. Design:

1. Type: Dual body
2. Inlet/Outlet: Flanged unless otherwise indicated
3. Releases accumulated air under pressure at pipeline high point.
4. Single body, NPT output, double orifice
5. Pressure rating: 150 psi

C. Materials: Cast or ductile iron body, stainless steel float. Standard epoxy coated

D. Mushroom cap for outlet

2.10 ECCENTRIC PLUG VALVES

A. General

1. Description: Non-lubricated, eccentric plug-type valve.
2. Suitable for drip-tight, bi-directional shutoff at the specified valve design pressure.

B. Valve Design

1. Port Design
   a. Rectangular shaped.
   b. Port Area:
      1) Valves less than or equal to 20-inches in nominal size: At least 80 percent of the full pipe cross-sectional area.

2) Valves greater than 20-inches in nominal size: At least 70 percent of the full pipe cross-sectional area.

2. Plug Design:

a. Geometry: Eccentrically shaped with a cylindrical seating surface that is offset from the center of the plug shaft.

b. Facing:

1) Encapsulate entire plug with resilient material.

2) Bond between Resilient Facing and Metal Plug: Capable of withstanding 75-pound pull in accordance with ASTM D429, Method B.

3. Valve Seats: Welded-in overlay of not less than 90 percent pure nickel to form a raised area at least 1/8-inch thick for contact with the plug facing. Machine seat after welding to provide a smooth surface.

4. Shaft Bearing and Bottom Bearing:

a. Provide replaceable bearings in the upper and lower shaft trunnions.

b. Design: Sleeve-type, permanently lubricated.

5. Shaft Seal: Chevron type packing seal, held in place with an adjustable gland follower. Valves using O-ring type shaft seals are not acceptable.

C. Valve Body Pressure Ratings

1. Valves 12 inches in nominal size and smaller: 175 psi.

2. Valves 14-inches through 36-inches in nominal size: 150 psi.

3. Valves 42-inches through 54-inches in nominal size: 125 psi.

D. End Connections

1. Valves 3 inches and Smaller: Threaded ends.

2. Valves Larger than 3 inches:

a. Exposed Piping Systems: Flanged end connections with flange dimensions, facing and drilling conforming to ANSI B16.1, Class 125.

b. Buried Piping Systems: Mechanical joint end connections conforming to ANSI A21.11/AWWA C606.

E. Materials of Construction

1. Body: Cast iron, ASTM A126, Class B.

2. Plug: Cast iron, ASTM A126, Class B, or cast iron ASTM A436 (Ni-resist), or ductile iron, ASTM A536.

3. Plug Facing: Neoprene or Buna-N.

4. Body Seats:

a. Valves less than 3 inches in nominal size: Cast iron, ASTM A126, Class B.

b. Valves 3 inches in nominal size and larger: Stainless steel, ASTM A276, Type 304 or nickel.

5. Stem Packing: Buna-N or PTFE.

6. Plug Bearings: Type 316 stainless steel.

7. Bolts, Studs, Nuts and Washers: Zinc plated in exposed installations, Type 316 stainless steel in buried installations.

F. Shop Applied Interior and Exterior Coatings

1. Interior Surfaces: Apply two coats Ameron Amerlock 400, Kop Coat Carboline 890LT, or equal. Apply each coat to 4 to 5 mils thick.

2. Exterior Surfaces: Apply polyurethane coating system consisting of one coat primer, one intermediate coat of polyamide epoxy, and one final coat of polyurethane.

a. Primer and Intermediate Coats: Ameron Amerlock 400, Kop Coat Carboline 890LT, or equal. Apply each coat to 4 to 5 mils thick.

b. Finish Coat: Ameron Amercoat 450HS, Kop Coat Carboline 134HS, Tnemec Series 74 Semi-Gloss Endura-Shield, or equal. Apply 1.5 to 2 mills thick.

2.11 VALVE ACTUATORS

A. General

1. Furnish all valves with operators, handwheels, levers, or other suitable handles as shown on the Drawings or specified herein.

2. Furnish chain operators for valves 4-inches and larger located more than 7-feet above the floor. Provide a hook to store the chain clear of walkways.

3. Provide 2-inch-square operating nut for all buried valves. See Section 40 05 57.13 for additional valve operator appurtenances for buried valve.

4. All threaded stem valves shall open by turning the valve stem counter clock-wise.

2.12 PRESSURE GAUGE ASSEMBLY

A. Complete installation, unless otherwise shown, shall include ¾-inch plug valve isolation at the main, a gauge protector made specifically for solids handling service, a snubber and gauge. Provide a support plate to the nearest flange.

B. Plug Valve: Shall be DeZurik PEC; or equal. Connections shall be threaded

C. Protector: Shall be for slurry service with flushing connection. Body shall be steel or cast iron. Diaphragm shall be removable of Type 316 stainless steel. Complete unit shall be Trerice, M & G (U.S. Gauge), or equal.

D. Gauges and Snubbers: Shall be as specified for System A.

E. Installation: All protectors and gauge bourdon tubes shall be evacuated of air, glycerin filled at the factory and factory calibrated.

F. See Division 40 for additional instrumentation requirements, including installation, calibration, and testing requirements.

G. Manual Valve Operators: See Section 40 05 57.13 for additional requirements.

H. Powered Valve Operators: See Section 40 05 57.23 for motorized valve actuators.

1. Wye Strainers

a. Materials

b. Connections: True union.

c. Strainer shall have hex cap for access to screen.

d. Supply with 1/2-inch brass gauge cock.

PART 3 - PRODUCTS

3.01 INSTALLATION

A. Install valves in accordance with the manufacturer's recommendations.

B. Valves installed in vertical runs of pipe shall have their operating stems oriented to facilitate the most practicable operation, as approved by the Engineer.

C. Install butterfly valves in accordance with the manufacturer’s published recommendations and AWWA C504.

D. Provide valve tags for valve identification. See Section 10 14 13.

3.02 TESTING

A. Test valves at the same time that the adjacent pipeline is tested.

B. Joints shall show no visible leakage under test. Joints that show signs of leakage shall be repaired prior to final acceptance.

C. Protect any special parts of control systems or operators that might be damaged by the pipeline test. The Contractor shall be held responsible for any damage caused by the testing.

D. If requested by the City, the valve manufacturer shall furnish an affidavit stating the materials options furnished, and/or that these and other referenced specifications have been complied with.

3.03 FIELD PAINTING

A. Paint exposed valves in accordance with Section 09 96 00.

B. Coat all buried metal parts such as valves and bolt-ups not cement mortar coated with two coats of bitumastic in accordance with Section 09 96 00 and encased with one sheet of 8-mil minimum thickness polyethylene to form a continuous and all-encompassing layer of polyethylene between the protected metal and surrounding earth.

C. Secure all polyethylene in place with 10-mil polyethylene tape.

END OF SECTION

SECTION 40 05 65

FABRICATED STAINLESS STEEL GATES

PART 1 - GENERAL

1.01 SUMMARY

A. Section Includes:

1. Design, fabrication, installation and testing requirements for the for the fabricated stainless steel slide gates, weir gates, stop gates, and necessary appurtenances to provide a complete and operable installation.

B. Equipment List

1. The equipment specified in this section in listed in the gate schedule included at the end of this section.

1.02 REFERENCED SPECIFICATION SECTIONS

A. The following Sections are referenced in this Section

1. Section 01 33 00 – Submittals
2. Section 01 66 00 – Materials and Equipment
3. Section 01 78 23 – Operations and Maintenance Data
4. Section 01 78 36 – Warranties and Bonds
5. Section 01 79 00 – Training
6. Section 01 81 00– Equipment and System Testing
7. Section 05 50 01 – Anchor Bolts and Anchoring Devices
8. Section 40 05 57.23 – Powered Valve Operators and Operator Appurtenances

1.03 DEFINITIONS

A. Design Head (Seating or Unseating): The hydrostatic head representing the differential pressure that the gate is to be designed to withstand and for which the actuator is sized to accommodate.

B. Seal: Resilient material attached to the slide plate or the gate frame that function to prevent leakage.

C. Seat: The horizontal and vertical bearing surfaces that support the slide plate that function to prevent leakage.

D. Slenderness Ratio (L/R): The ratio of maximum unsupported stem length to stem cross-section radius of gyration.

E. Self-contained: The arrangement of gate actuator, supported by the gate frame, such that the operating thrust loads are not applied to the gate assembly.

F. EPDM: Ethylene propylene diene monomer.

G. RMS: Root Mean Square.

H. UHMWPE: Ultra high molecular weight polyethylene.

1.04 DESIGN REQUIREMENTS

A. Reference Standard: Provide slide gates conforming to AWWA C561.

B. Design gates in accordance with the performance requirements specified below and to withstand the seating and unseating head conditions specified in the Gate Schedule provided at the end of this Section.

1. Ultimate and Yield Tensile, Compressive and Shear Strength Criteria:

a. Apply safety factor of 4.0 with regard to ultimate tensile, compressive and shear strength.

b. Apply safety factor of 2.0 with regard to tensile, compressive and shear yield strength.

2. Slide Plate and Frames:

a. Minimum thickness of structural members: 1/4-inch.

b. Slide Plate Deflection: Not more than 1/360 of the plate span, or 1/8-inch, whichever is less, at the specified maximum hydraulic head.

3. Seat and Seals: Seat contact pressure shall not exceed 600 psi at the design head.

4. Guides: Minimum material thickness shall be 1/4-inch.

5. Yoke:

a. The yoke shall withstand the thrust of the actuator when a 40-pound effort is placed on the handwheel or handcrank.

b. The requirements Paragraph 1.3.B.5.a above shall be met in addition to a design safety factor of 1.5 with regard to yield strength at the locked-rotor torque of the actuator.

c. The yoke deflection shall not exceed 1/360 of gate width at the maximum operating load.

6. Stem Connection:

a. For manual actuators, the design load shall be the output thrust when a 40 pound effort is applied to the handwheel or handcrank.

b. For an electric actuator, the design load shall be 1.25 times the output thrust developed in the motor-locked rotor torque condition.

7. Stem Guides.

a. Stem guides shall be bushed with a maximum diametral clearance of 1/8.

8. Stem Connection at Slide Plate: Design connection using specified stem sizing criteria.

9. Structural members forming the yoke: Size to accommodate the loads developed by the gate operating device as determined by the stem sizing calculations.

10. Stem Sizing Criteria: Select and provide the largest stem diameter determined by the following calculations:

a. Buckling Load Criteria: The critical buckling load shall be determined using the Euler Column Formula with a C value of 2.

b. Manually operated gates, and gates operated with an electric motor actuator in manual mode: Tensile and Compressive Loads: The tension and compression operating load conditions shall be as follows:

1) Loads created by the application of a 40 pound force on the handwheel or hand crank. Apply a safety factor of 2.0 to tension load calculations.

2) Loads created by a 50 foot-pound torque applied to the operating nut. Apply a safety factor of 2.0 to compressive load calculations.

3) Under both conditions, determine stem diameter that will not exceed one-fifth of the ultimate tensile strength of the stem material.

4) Electrically actuated gates: Determine stem diameters required to a stem design force not less than 1.25 times the output thrust of the unit in the stalled motor condition.

5) Provide stem guides to achieve a slenderness ratio not less 200 for each unsupported section of the stem.

C. Slide gates and weir gates mounted directly to concrete walls: Designed for installation without the use of a wall thimble embedded in the concrete.

D. Guide for stop gates shall be embedded in concrete walls.

E. Allowable Leakage Limits

1. Seating and Unseating Head Installations: Leakage not to exceed 0.10 gallons per minute per foot of seating perimeter for seating and unseating heads.

F. Sizing Criteria for Gate Actuators: In accordance with AWWA C561.

G. Site Conditions

1. The equipment provided under this section shall be specifically designed for operation in a raw sewage channel in a municipal wastewater treatment plant. The wastewater may contain organic solids including vegetable parts, rags, rubber goods, small bits of wood, industrial solvents, petroleum products, grease, and detergents.

H. Exposures

1. Rainfall

2. Wind

3. Direct Sunlight

4. Corrosive environment due to wastewater

a. Partial and complete submergence

b. Splashing

c. Hydrogen sulfide gases

d. Hydrocarbon gases

I. Air temperature: 45 – 85°F

J. Wastewater characteristics

1. Temperature: 45 – 85°F

2. pH: 4 – 12

1.05 QUALITY ASSURANCE

A. Unit Responsibility:

1. Obtain equipment provided under this Section shall from a single supplier or manufacturer who, with the Contractor, shall assume full responsibility for the completeness of the system. The supplier or manufacturer shall be the source of information on equipment furnished regardless of the manufacturing source of that equipment

2. Provide single source coordination responsibility through the manufacturer for the complete system

B. Qualifications

1. For a manufacturer to be determined acceptable for providing the equipment specified herein, they must show evidence of a minimum of ten (10) installations which are successfully in operation for (5) years and ten (10) years' experience in the design and manufacturer of fabricated slide gates in compliance with AWWA C561 of similar size and type as specified herein. Reference information shall include location, service, contact person and contact phone number

2. The equipment shall be a standard production product of the manufacturer.

1.06 DELIVERY, STORAGE AND HANDLING

A. Equipment shall be protected during shipment, handling, and storage as specified in Section 01 66 00.

B. Handle and store in accordance with the manufacturer’s recommendations. Avoid warping gate frame and maintain tolerances between seating faces.

C. Self-contained Slide Gates: Ship as a fully assembled unit, complete and ready for installation, except electric actuators and hydraulic cylinders shall be shipped separately and installed in the field.

D. Ship gates that are not in a self-contained arrangement in components and assemble in the field. Pack gate stems in sturdy wood crates and bolt slide plates and frames securely to wood skids to protect unit and to provide safe handling. Package and ship actuator separately.

1.07 SUBMITTALS

A. Comply with Section 01 33 00.

B. Product Data: Submit manufacturer’s standard catalog data, descriptive literature, parts list, and specifications describing system components.

C. Shop Drawings

1. Certified drawings indicating principal dimensions, general construction of the assembly and materials of construction.

2. Detailed structural, mechanical, and electrical drawings showing equipment fabrications and interface with other items. Include dimensions, size, and locations of connections to other work, and weights of associated equipment.

3. Mounting details for each type of mounting configuration used.

4. External utility requirements such as air, water, power, and drain for each component.

5. Functional description of internal and external instrumentation and controls to be supplied including list of parameters monitored, controlled, or alarmed.

6. Mounting details and connections to electric gate actuator.

7. Power and control wiring diagrams, including wiring terminal numbers.

8. Contractor's field performance test procedures.

D. Design Data:

1. Gate opening and closing thrust forces that will be transmitted to the support structure with operator at extreme positions and load.

2. Gate operator and stem sizing calculations for each gate and service condition. Show equations used and identify variables and design factors.

3. Calculated gate deflection under maximum specified hydraulic loading condition.

E. Test Reports: Submit results of factory leakage test.

F. Installation Instructions: Submit manufacturer's instructions, requirements, and detailed drawings for installation of slide gates and actuators.

G. Operation and Maintenance Data: Prepare and submit in accordance with Section 01 78 23.

1.08 WARRANTY

A. Provide a manufacturer's warranty meeting the requirements of Section 01 78 36.

PART 2 - PRODUCTS

2.01 MANUFACTURERS

A. Manufacturers: One of the following or equal:

1. Golden Harvest, Inc.

2. Fontaine-Aquanox.

3. Hydro Gate LLC.

2.02 MATERIALS

A. Slide, Weir, and Stop Gates Structural Members: Thimble, Frame, Slide Plate, Guides and Yoke: ASTM A240 or ASTM A276, Type 316L Stainless Steel.

B. Lift Nut: ASTM B584 bronze.

C. Flush-Bottom Sill: Extruded or molded neoprene or EPDM. Reclaimed rubber as described in ASTM D2000 shall not be used.

D. Flush-Bottom Sill Retainer: Stainless Steel ASTM A276.

E. Actuator Pedestal: Stainless Steel ASTM A36/A36M.

F. Gear Housing: Cast iron ASTM A48 Grade 35B/40B

G. Gears: Steel, AISI 8620, AISI 4140 or AISI 1117.

H. Thrust Nut

I. Rising Stem Type Slide and Weir Gates: ASTM B584 bronze.

J. Non-rising Stem Type Slide and Weir Gates: ASTM B584 bronze.

K. Seat: UHMWPE in accordance with ASTM D4020

L. Seal: In accordance with AWWA C513.

M. Stems and Stem Couplers: ASTM A276 Type 316 Stainless Steel.

N. Stem Guide Bushings: Cast/Extruded UHMWPE ASTM D4020, or bronze bushed.

O. Bolts, Studs, Fasteners and Anchor Bolts: ASTM A276 Type 316 Stainless Steel. Adhesive anchors per Section 05 50 01.

2.03 FABRICATED SLIDE AND WEIR GATES

A. Designed and fabricated in accordance with AWWA C561.

B. Slide Plate

1. Comprised of a single flat stainless steel plate reinforced as required to meet the specified design criteria for deflection. Horizontal stiffeners to be welded to side vertical stiffeners.

C. Seals

1. Seals shall be self-adjusting UHMWPE with compression cord. Load pads are not acceptable. Elastomeric seals such as J-seals and crown seals and adjustable seal systems are not acceptable.

D. Slide Plate Guides

1. Comprised of structural members welded to form a rigid, one-piece frame designed to mount directly on a concrete wall or within a channel. Bolted together frames are not acceptable.

2. Vertical Guides:

a. Self-contained Gates: Design to extend in one continuous piece from the gate invert to form posts for supporting the yoke. Size vertical guides to retain the slide plate and to withstand forces generated by the gate operating mechanism.

b. Gates not Self-contained: Design to extend in one continuous piece from the gate invert to form posts for supporting at least 2/3 of the slide plate height when the gate is in the full open position. Size vertical guides to retain the slide plate and to withstand forces generated by the gate operating mechanism.

c. Guide Slot Depth: Provide per Manufacturer's recommendations, with the necessary calculations.

d. Guide Slot Liners: Incorporate replaceable UHMWPE bearing strips on both sides of the guide slot.

E. Yoke

1. Formed by structural members welded to the vertical guides.

2. Location Relative to Operating Floor:

a. Minimum Height of Yoke: 3 feet 6 inches above the operating floor.

b. Maximum Height of Yoke: High enough above the operating floor to allow the bottom of the upward acting slide plate to be raised above the maximum water surface elevation when the gate is in the full up position.

F. Stem and Stem Guides

1. Diameter as required to meet specified sizing criteria, minimum 1.5-inch diameter at the threads. Length suitable to extend at least 2 inches above the stop collar when the gate is in the closed position.

2. Rising Stem Gates: Threads shall be machine cut and rolled type, full depth threads with RMS surface roughness of 16 micro-inches or less.

3. Provide adjustable stop collar on manual gates

a. Upward Opening Gates: Located at closed gate position.

b. Downward Opening Gates: Locate to prevent the loss of the slide from the guides.

4. Use stem couplers with internal threads when stems are made up of more than one section. Hold coupler in place with bolts or with key and keyway.

5. Stem Guides: Split, adjustable in two directions to properly align stem.

a. Anchor bolts for stem guide brackets: Type 304/316 stainless steel.

6. Stem Cover:

a. Clear plastic with vent hole, drain and top cap.

b. Place open and closed labels at appropriate locations with adhesive tape and graduations at 1-inch intervals.

2.04 FABRICATED STOP GATES

A. Slide Plate

1. Comprised of a single flat stainless steel plate reinforced as required to meet the specified design criteria for deflection. Horizontal stiffeners to be welded to side vertical stiffeners.

2. Provided with a lifting handle.

3. Provide dual lifting handles on gates wider than 36".

B. Guides

1. Guides shall be designed to be embedded in concrete walls

2. Guide Slot Depth: Provide per Manufacturer's recommendations, with the necessary calculations.

3. Guide Slot Liners: Incorporate replaceable UHMWPE bearing strips on both sides of the guide slot.

4. Gate invert shall contain a removable neoprene seal. Seals attached to the slide will not be acceptable.

2.05 SLIDE AND WEIR GATE OPERATORS

A. Manual Gate Operators: Provide handwheel type operators meeting requirements of AWWA C561 pertaining to manual lifting devices.

1. Handwheel Type Operators: Non-geared.

2. Hand Crank Operators:

a. Geared type designed to allow operation of gate under the specified design hydraulic head condition with a maximum effort of 40 pound pull on the handwheel.

b. Enclose gears and bearings in a weatherproof housing with pressure fittings for grease lubrication.

c. Crank Handles: Removable from the operator.

3. Where top of gate frames are higher than 48" above the operating deck, a mechanism shall be provided to lower the height of the handwheel or hand crank to 36" above the deck.

B. Pedestal Type Floor Stands

1. Off-set type, wall mounted, or standard as indicated on the Drawings.

2. Height: As needed to locate gate operator approximately 36 inches above operating floor.

3. Materials:

a. Floor Stand: Stainless Steel ASTM A36/A36M.

b. Operating Nut: Bronze.

c. Gearing: Steel, accurately machined to provide smooth operation.

d. Operating Nut: Internally threaded with cut or cold rolled Acme threads corresponding to stem threading.

e. Bearings: Grease lubricated ball thrust or tapered, located below and above operating nut to support both opening and closing thrusts.

C. Powered Gate Actuators: In accordance with Section 40 05 57.23.

2.06 FABRICATION

A. Shop Fabrication

1. Workmanship:

a. Conform to design dimensions with bolt holes accurately drilled to match mounting pattern.

b. Free from defects, burrs, grease, and dirt.

2. Tolerances: Within 1/8-inch of square, flatness and dimensional tolerances.

B. Welding: In accordance with AWS D1.6. Welds free of slag, weld splatter and discoloration from heat.

2.07 SOURCE QUALITY CONTROL

1. Tests: Perform leakage test under the specified hydrostatic design conditions. Measure and report leakage.

2. Verification of Operation: Operate slide gate from fully closed to fully open to verify proper operation.

PART 3 - EXECUTION

3.01 INSTALLATION

A. Handle, install, connect, clean, condition, and adjust clarifier equipment in strict accordance with manufacturer's instructions and in conformity with specified requirements.

B. Manufacturer's field representative shall inspect the system prior to the beginning of equipment installation, instruct the Contractor on equipment installation, and observe installation. Scheduling and timing of manufacturer’s field representative’s services is described below

C. Accurately place anchor bolts using the anchor locations shown on the manufacturer’s certified drawings.

D. Gate Mounting: Plumb, shimmed as necessary, and accurately aligned.

3.02 START-UP AND FIELD TESTING

A. Inspection, testing, and certification shall be provided, and testing procedures and forms shall be submitted and used, as specified in Section 01 81 00

B. As part of installation testing, described in Section 01 81 00, conduct leakage tests on slide gates when field leakage tests are specified in the Gate Schedule. Subject gates to the design head conditions specified.

C. Manufacturer’s field representative shall be present onsite during installation, functional, and operational testing. Scheduling and timing of manufacturer’s field representative’s services is described below

3.03 TRAINING

A. Manufacturer’s field representative shall provide training of the Owner’s personnel as described in Section 01 79 00. Scheduling and timing of manufacturer’s field representative’s services is described below.

3.04 MANUFACTURER’S FIELD SERVICES

A. Manufacturer's field representative services:

B. Inspect the equipment prior to the beginning of equipment installation.

C. Instruct the Contractor on equipment installation.

D. Observe installation.

E. Participate in installation, functional, and operational testing

F. Provide test equipment, tools, and instruments necessary to accomplish equipment testing

G. Provide documentation that equipment has been installed properly, tested properly, and is ready for operation by Owner's personnel, as described in Section 01 81 00

H. Schedule and Timing

1. Schedule site attendance by manufacturer's representative when appropriate based on the progress of the work.

2. Timing: Minimum time spent at the project site, not including travel time:

a. Installation and Testing: Two (2) trips, three (3) days

b. Training: Two (2) sessions, each session one (1) hour

3.05 SCHEDULE

A. The Gate Schedule provided following "End of Section" is part of this Specification.

END OF SECTION

Equipment Number	Qty	Opening Size Width x Height (ft)	Type of Frame	Opening Direction	Mounting Arrangement			Design Head (ft)		Type of Operator	Leakage Testing Requirements		Notes
					Top	Sides	Bottom	Seating	Unseating		Factory	Field	
SLG 110-01	1	3 X 3	SC	U	N/A	WM	C-E	0	20	MO	Yes	Yes	open-close service

Legend
Type of Frame: SC = self-contained, SP = stop-plate guides, NSC = non self-contained
Opening Direction: U = Opens in an upward direction, D = Opens in a downward direction
Frame Mounting Arrangement: WM = Wall Mount, C-S = In-Channel with Surface Mounted Frame, C-E: In-Channel with Embedded Frame
Type of Operator: HW = Handwheel, MO = Electric motor operated

(THIS PAGE LEFT BLANK INTENTIONALLY)

SECTION 40 05 96

SEISMIC RESTRAINTS FOR PIPING

PART 1 - GENERAL

1.01 SECTION INCLUDES

A. Seismic restraints for bracing all piping systems specified in Section 40 05 10.

1.02 REFERENCED SECTIONS

A. The following Sections are referenced in this Section

1. Section 01 33 00 – Submittal Procedures
2. Section 01 61 10 – Seismic Design Requirements
3. Section 01 61 11 – Seismic Anchorage and Bracing
4. Section 05 50 01 – Anchor Bolts and Anchoring Devices
5. Section 40 05 07 – Pipe Hangers and Supports
6. Section 40 05 10 – Piping Systems

1.03 DEFINITIONS

A. Longitudinal Direction: Direction parallel to the pipe axis.

B. Lateral Direction: Direction perpendicular to the pipe axis.

1.04 OPERATING CONDITIONS

A. Provide seismic restraints, specified in this section, to resist pipe movements and loads occurring as a result of an earthquake or other seismic event.

B. Unless otherwise specified, brace all piping to resist seismic loading caused by forces applied at the individual pipe's center of gravity. For seismic loading see Section 01 61 10.

1.05 RESTRAINT SELECTION

A. Unless otherwise specified, select, locate and provide seismic restraints for piping in accordance with the contract documents.

B. Review the piping layout in relation to the surrounding structure and adjacent piping and equipment before selecting the restraint to be used at each point.

C. Seismic restraints may be omitted from the following installations:

1. All other piping less than 2-1/2" inside diameter.
2. All piping suspended by individual hangers 12" or less in length from the top of the pipe to the bottom of the support for the hanger.

D. Do not brace piping systems to dissimilar parts of a building or to dissimilar building systems that may respond in a different mode during an earthquake. Examples: wall and a roof; solid concrete wall and a metal deck with lightweight concrete fill.

E. Size restraints to fit the outside diameter of the pipe, tubing, or, where specified, the outside diameter of insulation.

F. Do not permit contact between a pipe and restraint component of dissimilar metals. Prevent contact between dissimilar metals when restraining copper tubing by the use of copper-plated, rubber, plastic or vinyl coated, or stainless steel restraint components.

G. Do not use branch lines to brace main lines.

H. Do not permit seismic bracing to limit the expansion and contraction of the piping system.

1.06 SUBMITTALS

A. Provide seismic restraint locations, load calculations, and manufacturer's drawings as specified in Paragraph 3.01 as part of the submittals for equipment and piping coordination and installation drawings required in Section 40 05 10.

B. Provide seismic restraint load calculations for each seismically restrained pipe system prepared and signed by a civil or structural engineer currently registered in the State of California. See Section 01 61 11 for seismic loading required.

PART 2 - MANUFACTURERS

2.01 MANUFACTURERS

A. Carpenter & Patterson.

B. B-Line.

C. Kin-Line.

D. Anvil International.

E. Michigan.

F. Pipe Shields Incorporated.

G. Superstrut.

H. Unistrut.

I. Or equal.

2.02 PRODUCTS

A. Materials

1. Restraints, including braces and fittings, pipe and structural attachments, trapeze restraints, and accessories: Type 316 stainless steel.

2. Nuts, bolts and washers, fittings and accessories: Type 316 stainless steel.

3. Comply with MSS SP-58

B. Pipe Attachments

1. Type 1s - Clevis Restraint Attachment

a. Provide Type 1, clevis pipe hanger, as specified in Section 40 05 07, 2.02.B.

2. Type 3s - Double Bolt Restraint Clamp:

   a. Provide Type 3, double bolt pipe clamp, as specified in Section 40 05 07, 2.02.B.

3. Type 4s - Roller Restraint Attachment

   a. Provide Type 4, adjustable roller hanger, as specified in Section 40 05 07, 2.02.B.

   b. Size hold down strap as follows:

      1) 1” through 2” Pipe: 1” by 1/8” thick

      2) 2-1/2” through 4” Pipe: 1-1/4” by 3/l6” thick

      3) 6” Pipe: 2” by 3/l6” thick

      4) 8” Pipe: 2-1/2” by 3/16” thick

      5) 10” through 16” Pipe: 2-1/2” by 1/4” thick

      6) 20” Pipe: 3” by 1/4” thick

      7) 24” Pipe: 3” by 3/8” thick.

4. Type 7s - U-Bolt Restraint

   a. Provide Type 7, U-bolt, as specified in Paragraph 40 05 07, 2.02.B.

5. Type 13s - Framing Channel Strap Restraint

   a. Provide Type 13, framing channel pipe strap, as specified in Paragraph 40 05 07, 2.02.B.

6. Type 14s - Pipe Clamp Restraint

   a. Provide with configuration and components equivalent to MSS and FEDSPEC Type 4.

   b. Rod attachment and longitudinal brace connection stud shall be fabricated and welded by the manufacturer.

   c. Steel pipe (insulated): Superstrut No. S-720, Kin-Line No. S475, or equal, with insulation shield.

   d. Steel pipe (uninsulated): Superstrut No. S-720, Kin-Line No. S475, or equal.

   e. Cast and ductile iron pipe: Superstrut No. S-720, Kin-Line No. S475, or equal.

   f. Copper pipe (insulated): Superstrut No. S-720, Kin-Line No. S475, or equal, with insulation shield.

   g. Copper pipe (uninsulated): Superstrut No. S-720, Kin-Line No. S475, or equal, with insulation shield or dielectric lining.

   h. Plastic pipe: Superstrut No. S-720, Kin-Line No. S475, or equal.

C. Trapeze Restraints

1. General

   a. Unless otherwise specified, provide trapeze members with a minimum steel thickness of 12-gage, with a maximum deflection 1/240 of the span.

2. Type 20s - Single Channel Lateral Restraint

a. Trapeze restraint cross member

1) 1-5/8" square framing channel, Unistrut P1000, B-Line B22, Superstrut A-1200, or equal.

b. Pipe attachments

1) Type 13s or Type 7s specified in Paragraph 2.02.B.

c. Rod stiffeners and lateral brace

1) As specified in Paragraph 2.02.D.

3. Type 21s - Double Channel Lateral Restraint

a. Trapeze restraint cross member

1) a double channel manufactured assembly such as Unistrut P1001, B-Line B22A, Superstrut A-1202, or equal.

2) Pipe attachments

a) Type 13s or Type 7s specified in Paragraph 2.02.B.

b. Rod stiffeners and lateral brace

1) As specified in Paragraph 2.02.D.

4. Type 22s - Double Channel Longitudinal Restraint

a. Trapeze restraint cross member: a double channel manufactured assembly such as Unistrut P1001, B-Line B22A, Superstrut A-1202, or equal.

b. Pipe attachments

1) Type 13s or Type 7s specified in Paragraph 2.02.B.

c. Rod stiffeners, longitudinal and lateral braces

1) As specified in Paragraph 2.02.D.

D. Braces and Fittings

1. Seismic Brace Fitting

a. Provided for use with industry standard framing channel.

b. Provide welded construction, two-piece linked fitting.

c. Provide means to reduce noise and vibration transmission between the linked fitting parts.

d. Manufacturers

1) Superstrut C-749N series seismic brace,

2) Kin-Line No. 633 seismic connector fitting,

3) or equal.

2. Hanger Rod Stiffener Assembly

a. Rod stiffener channel

1) 1-5/8" square framing channel, Unistrut P1000, B-Line B22, Superstrut A-1200, or equal.

b. Rod stiffener clamps, complete with channel nut

1) Superstrut ES-142, Kin-Line No. 635, or equal.

3. Type A1 Seismic Brace

a. Provide 1-5/8” square framing channel, Unistrut P1000, B-Line B22, Superstrut A-1200, Kin-Line No. 4112, or equal.

4. Type A2 Seismic Brace

a. Provide 1-5/8” wide by 3-3/4” deep framing channel, Unistrut P5000, B-Line B11, Superstrut H-1200, Kin-Line No. 8212, or equal.

E. Structural Attachments

1. General

a. Unless otherwise specified, provide hanger rod structural attachments as specified in Section 40 05 07.

b. Structural attachments for longitudinal and lateral seismic braces: as specified in Paragraph 2.02.D.

2. Type SA-1 Attachment

a. Brace fitting: as specified in Paragraph 2.02.D.

b. Concrete anchors

1) As specified in Section 05 50 01 with embedment and location dimensions as specified.

3. Type SA-2 Attachment

a. Brace fitting: as specified in Paragraph 2.02.D.

b. Concrete anchors

1) As specified in Section 05 50 01 with embedment and location dimensions as specified.

c. Framing channel

1) As specified in Paragraph 2.02.F.

4. Type SA-3 Attachment

a. Brace fitting

1) As specified in Paragraph 2.02.D.

b. Cap screw, lockwasher and hex nut materials and finish: compatible with structural steel material.

5. Type SA-4 Attachment

a. Brace fitting

1) As specified in Paragraph 2.02.D.

6. Type SA-5 Attachment

a. Brace fitting

1) As specified in Paragraph 2.02.D.

2) Angle: 4” x 3” x 3/8”.

F. Accessories

1. Hanger Rods

a. Threaded on both ends or continuous threaded and sized as specified.

2. Framing Channel

a. Roll formed, 12-gage.

b. Provide channel with a continuous slot along one side with in-turned clamping ridges.

c. Manufacturers

1) Unistrut P1000 series,

2) B-Line B22 series,

3) Superstrut A-1200 series,

4) or equal.

3. Rod Coupling

a. Provide with sight hole in center of coupling body.

b. Manufacturers

1) Anvil International. 135,

2) Superstrut H-119,

3) or equal.

2.03 THERMAL PIPE HANGER SHIELD

A. Provide thermal shields at seismic restraint locations on pipe requiring insulation.

B. Provide thermal pipe hanger shields as specified in Section 40 05 07, 2.03.

C. Provide Type 316 stainless steel band clamps on thermal shields at longitudinal pipe restraint locations.

PART 3 - EXECUTION

3.01 PIPE RESTRAINT LOCATIONS

A. Locate the first seismic restraint on a piping system not more than 10’ from the main riser, entrance to a building or piece of equipment.

B. Brace cast iron pipe on each side of a change in direction of 90º or more. Brace or stabilize joints in risers between floors.

C. Brace no-hub and bell and spigot cast iron soil pipe longitudinally every 20’ and laterally every 10’.

D. Lateral bracing for one pipe section may also act as longitudinal bracing for the pipe section connected perpendicular to it, if the bracing is installed within 24” of the elbow or tee of the same size.

E. Indicate seismic restraint locations and components on the piping layout drawings required by Section 40 05 10.

F. Provide a legend giving load information and restraint component selection at each restraint location.

G. Provide seismic restraint load calculations conforming to the requirements specified in Paragraph 1.06.

3.02 INSTALLATION

A. Use rod stiffener assemblies at seismic restraints for hanger rods over 6” in length. Provide a minimum of two rod stiffener clamps on any rod stiffener assembly.

B. Install lateral and longitudinal bracing between 45º above and 45º below horizontal, inclusive, relative to the horizontal centerline of the pipe.

C. Construct welded and bolted attachments to the building structural steel which comply with the AISC Manual of Steel Construction. Do not drill or burn holes in the building structural steel without approval of the Construction Manager

D. Use embedded anchor bolts instead of concrete inserts for seismic brace installations in areas below water surface or normally subject to submerging.

E. Install thermal pipe hanger shields on insulated piping at required locations during restraint installation. Make butt joint connections to pipe insulation at the time of insulation installation per the manufacturer’s recommendations.

F. Provide restraint components in contact with plastic pipe which are free of burrs and sharp edges.

G. Ensure rollers roll freely without binding.

H. Provide plastic or rubber end caps at the exposed ends of all framing channels that are located up to 7’ above the floor.

END OF SECTION

(THIS PAGE LEFT BLANK INTENTIONALLY)

SECTION 40 61 93

PROCESS CONTROL INPUT/OUTPUT (I/O)LIST

PART 1 - GENERAL

1.01 SECTION INCLUDES

A. Process Control I/O lists for work associated with the system supplier and system integrator scope of work. The system supplier and system integrator scope of work is not under this contract. This is for informational purposes.

1.02 RELATED SECTIONS

A. Division 40 – Process Integration

B. Division 26 – Electrical

1.03 I/O LIST DESCRIPTION AND FORMAT

A. The following is a detailed description of the PLC I/O column descriptions.

B. Column # Column Name Entry Description

1. Number
2. I/O Tag – SCADA ID for I/O Point
3. Description - The tag name assigned to distinguish and identify the specific PLC I/O point.
4. Equipment
5. P & ID Drawing No.
6. I/O Type – Signal Type – Digital or Analog
7. Min – Value of a Setpoint/Range
8. Max – Value of a Setpoint/Range
9. PLC - PLC Name
10. Rack – Rack Location in PLC
11. Slot – Slot Location in PLC
12. Point – Point Location in Slot
13. Comments

PART 2 - PRODUCTS

2.01 I/O SCHEDULE (ATTACHED)

PART 3 - EXECUTION (NOT USED)

END OF SECTION

#	I/O Tag	Description	Equipment	P&ID Drawings	I/O Type	Units	Min	Max	PLC	Rack	Slot	Point	Comments
1	YA-300-01	CP-300 120VAC PS1 OK / FAULT STATUS	CP-300	N/A	DIGITAL INPUT	N/A	-	-	CP-300	0	1	0	
2	YA-300-02	CP-300 120VAC PS2 OK / FAULT STATUS	CP-300	N/A	DIGITAL INPUT	N/A	-	-	CP-300	0	1	1	
3	YA-300-11	CP-300 24VDC PS1 OK / FAULT STATUS	CP-300	N/A	DIGITAL INPUT	N/A	-	-	CP-300	0	1	2	
4	YA-300-12	CP-300 24VDC PS2 OK / FAULT STATUS	CP-300	N/A	DIGITAL INPUT	N/A	-	-	CP-300	0	1	3	
5	YA-300-20A	NIP-300 UPS POWER	CP-300	N/A	DIGITAL INPUT	N/A	-	-	CP-300	0	1	4	
6	YA-300-20B	NIP-300 UPS LOW BATTERY	CP-300	N/A	DIGITAL INPUT	N/A	-	-	CP-300	0	1	5	
7	YA-300-20C	NIP-300 UPS COMMON ALARM	CP-300	N/A	DIGITAL INPUT	N/A	-	-	CP-300	0	1	6	
8	YA-300-30A	CP-300 UPS POWER	CP-300	N/A	DIGITAL INPUT	N/A	-	-	CP-300	0	1	7	
9	YA-300-30B	CP-300 UPS LOW BATTERY	CP-300	N/A	DIGITAL INPUT	N/A	-	-	CP-300	0	1	8	
10	YA-300-30C	CP-300 UPS COMMON ALARM	CP-300	N/A	DIGITAL INPUT	N/A	-	-	CP-300	0	1	9	
11	HS-110-00	INFLUENT PS, WET WELL SLUICE GATE IN REMOTE	SLG-110-00	I-111	ETHERNET	N/A	-	-	NIP-300	0	-	-	
12	XA-110-00	INFLUENT PS, WET WELL SLUICE GATE FAULT	SLG-110-00	I-111	ETHERNET	N/A	-	-	NIP-300	0	-	-	
13	OC-110-00	INFLUENT PS, WET WELL SLUICE GATE OPEN COMMAND	SLG-110-00	I-111	ETHERNET	N/A	-	-	NIP-300	0	-	-	
14	CC-110-00	INFLUENT PS, WET WELL SLUICE GATE CLOSE COMMAND	SLG-110-00	I-111	ETHERNET	N/A	-	-	NIP-300	0	-	-	

#	I/O Tag	Description	Equipment	P&ID Drawings	I/O Type	Units	Min	Max	PLC	Rack	Slot	Point	Comments
15	ZI-110-00	INFLUENT PS, WET WELL SLUICE GATE POSITION FEEDBACK	SLG-110-00	I-111	ETHERNET	%	0	100	NIP-300	0	-	-	
16	MAH-110-01	INFLUENT PS, PUMP NO. 1 SEAL LEAK ALARM	PMP-110-01	I-111	ETHERNET	N/A	-	-	NIP-300	0	-	-	PMP-110-01 CONTROLLED BY VFD-110-01
17	TAH-110-01	INFLUENT PS, PUMP NO. 1 OVERTEMP ALARM	PMP-110-01	I-111	ETHERNET	N/A	-	-	NIP-300	0	-	-	PMP-110-01 CONTROLLED BY VFD-110-01
18	YI-110-01A	INFLUENT PS, PUMP NO. 1 READY	PMP-110-01	I-111	ETHERNET	N/A	-	-	NIP-300	0	-	-	PMP-110-01 CONTROLLED BY VFD-110-01
19	YI-110-01B	INFLUENT PS, PUMP NO. 1 RUNNING	PMP-110-01	I-111	ETHERNET	N/A	-	-	NIP-300	0	-	-	PMP-110-01 CONTROLLED BY VFD-110-01
20	HS-110-01	INFLUENT PS, PUMP NO. 1 IN REMOTE	PMP-110-01	I-111	ETHERNET	N/A	-	-	NIP-300	0	-	-	PMP-110-01 CONTROLLED BY VFD-110-01
21	XA-110-01	INFLUENT PS, PUMP NO. 1 FAULT	PMP-110-01	I-111	ETHERNET	N/A	-	-	NIP-300	0	-	-	PMP-110-01 CONTROLLED BY VFD-110-01
22	YC-110-01	INFLUENT PS, PUMP NO. 1 START COMMAND	PMP-110-01	I-111	ETHERNET	N/A	-	-	NIP-300	0	-	-	PMP-110-01 CONTROLLED BY VFD-110-01
23	SI-110-01	INFLUENT PS, PUMP NO. 1 SPEED FEEDBACK	PMP-110-01	I-111	ETHERNET	%	0	100	NIP-300	0	-	-	PMP-110-01 CONTROLLED BY VFD-110-01
24	SC-110-01	INFLUENT PS, PUMP NO. 1 SPEED CONTROL	PMP-110-01	I-111	ETHERNET	%	0	100	NIP-300	0	-	-	PMP-110-01 CONTROLLED BY VFD-110-01
25	MAH-110-02	INFLUENT PS, PUMP NO. 2 SEAL LEAK ALARM	PMP-110-02	I-111	ETHERNET	N/A	-	-	NIP-300	0	-	-	PMP-110-02 CONTROLLED BY VFD-110-02

#	I/O Tag	Description	Equipment	P&ID Drawings	I/O Type	Units	Min	Max	PLC	Rack	Slot	Point	Comments
26	TAH-110-02	INFLUENT PS, PUMP NO. 2 OVERTEMP ALARM	PMP-110-02	I-111	ETHERNET	N/A	-	-	NIP-300	0	-	-	PMP-110-02 CONTROLLED BY VFD-110-02
27	YI-110-02A	INFLUENT PS, PUMP NO. 2 READY	PMP-110-02	I-111	ETHERNET	N/A	-	-	NIP-300	0	-	-	PMP-110-02 CONTROLLED BY VFD-110-02
28	YI-110-02B	INFLUENT PS, PUMP NO. 2 RUNNING	PMP-110-02	I-111	ETHERNET	N/A	-	-	NIP-300	0	-	-	PMP-110-02 CONTROLLED BY VFD-110-02
29	HS-110-02	INFLUENT PS, PUMP NO. 2 IN REMOTE	PMP-110-02	I-111	ETHERNET	N/A	-	-	NIP-300	0	-	-	PMP-110-02 CONTROLLED BY VFD-110-02
30	XA-110-02	INFLUENT PS, PUMP NO. 2 FAULT	PMP-110-02	I-111	ETHERNET	N/A	-	-	NIP-300	0	-	-	PMP-110-02 CONTROLLED BY VFD-110-02
31	YC-110-02	INFLUENT PS, PUMP NO. 2 START COMMAND	PMP-110-02	I-111	ETHERNET	N/A	-	-	NIP-300	0	-	-	PMP-110-02 CONTROLLED BY VFD-110-02
32	SI-110-02	INFLUENT PS, PUMP NO. 2 SPEED FEEDBACK	PMP-110-02	I-111	ETHERNET	%	0	100	NIP-300	0	-	-	PMP-110-02 CONTROLLED BY VFD-110-02
33	SC-110-02	INFLUENT PS, PUMP NO. 2 SPEED CONTROL	PMP-110-02	I-111	ETHERNET	%	0	100	NIP-300	0	-	-	PMP-110-02 CONTROLLED BY VFD-110-02
34	MAH-110-03	INFLUENT PS, PUMP NO. 3 SEAL LEAK ALARM	PMP-110-03	I-112	ETHERNET	N/A	-	-	NIP-300	0	-	-	PMP-110-03 CONTROLLED BY VFD-110-03
35	TAH-110-03	INFLUENT PS, PUMP NO. 3 OVERTEMP ALARM	PMP-110-03	I-112	ETHERNET	N/A	-	-	NIP-300	0	-	-	PMP-110-03 CONTROLLED BY VFD-110-03
36	YI-110-03A	INFLUENT PS, PUMP NO. 3 READY	PMP-110-03	I-112	ETHERNET	N/A	-	-	NIP-300	0	-	-	PMP-110-03 CONTROLLED BY VFD-110-03

#	I/O Tag	Description	Equipment	P&ID Drawings	I/O Type	Units	Min	Max	PLC	Rack	Slot	Point	Comments
37	YI-110-03B	INFLUENT PS, PUMP NO. 3 RUNNING	PMP-110-03	I-112	ETHERNET	N/A	-	-	NIP-300	0	-	-	PMP-110-03 CONTROLLED BY VFD-110-03
38	HS-110-03	INFLUENT PS, PUMP NO. 3 IN REMOTE	PMP-110-03	I-112	ETHERNET	N/A	-	-	NIP-300	0	-	-	PMP-110-03 CONTROLLED BY VFD-110-03
39	XA-110-03	INFLUENT PS, PUMP NO. 3 FAULT	PMP-110-03	I-112	ETHERNET	N/A	-	-	NIP-300	0	-	-	PMP-110-03 CONTROLLED BY VFD-110-03
40	YC-110-03	INFLUENT PS, PUMP NO. 3 START COMMAND	PMP-110-03	I-112	ETHERNET	N/A	-	-	NIP-300	0	-	-	PMP-110-03 CONTROLLED BY VFD-110-03
41	SI-110-03	INFLUENT PS, PUMP NO. 3 SPEED FEEDBACK	PMP-110-03	I-112	ETHERNET	%	0	100	NIP-300	0	-	-	PMP-110-03 CONTROLLED BY VFD-110-03
42	SC-110-03	INFLUENT PS, PUMP NO. 3 SPEED CONTROL	PMP-110-03	I-112	ETHERNET	%	0	100	NIP-300	0	-	-	PMP-110-03 CONTROLLED BY VFD-110-03
43	MAH-110-04	INFLUENT PS, PUMP NO. 4 SEAL LEAK ALARM	PMP-110-04	I-112	ETHERNET	N/A	-	-	NIP-300	0	-	-	PMP-110-04 CONTROLLED BY VFD-110-04
44	TAH-110-04	INFLUENT PS, PUMP NO. 4 OVERTEMP ALARM	PMP-110-04	I-112	ETHERNET	N/A	-	-	NIP-300	0	-	-	PMP-110-04 CONTROLLED BY VFD-110-04
45	YI-110-04A	INFLUENT PS, PUMP NO. 4 READY	PMP-110-04	I-112	ETHERNET	N/A	-	-	NIP-300	0	-	-	PMP-110-04 CONTROLLED BY VFD-110-04
46	YI-110-04B	INFLUENT PS, PUMP NO. 4 RUNNING	PMP-110-04	I-112	ETHERNET	N/A	-	-	NIP-300	0	-	-	PMP-110-04 CONTROLLED BY VFD-110-04
47	HS-110-04	INFLUENT PS, PUMP NO. 4 IN REMOTE	PMP-110-04	I-112	ETHERNET	N/A	-	-	NIP-300	0	-	-	PMP-110-04 CONTROLLED BY VFD-110-04

#	I/O Tag	Description	Equipment	P&ID Drawings	I/O Type	Units	Min	Max	PLC	Rack	Slot	Point	Comments
48	XA-110-04	INFLUENT PS, PUMP NO. 4 FAULT	PMP-110-04	I-112	ETHERNET	N/A	-	-	NIP-300	0	-	-	PMP-110-04 CONTROLLED BY VFD-110-04
49	YC-110-04	INFLUENT PS, PUMP NO. 4 START COMMAND	PMP-110-04	I-112	ETHERNET	N/A	-	-	NIP-300	0	-	-	PMP-110-04 CONTROLLED BY VFD-110-04
50	SI-110-04	INFLUENT PS, PUMP NO. 4 SPEED FEEDBACK	PMP-110-04	I-112	ETHERNET	%	0	100	NIP-300	0	-	-	PMP-110-04 CONTROLLED BY VFD-110-04
51	SC-110-04	INFLUENT PS, PUMP NO. 4 SPEED CONTROL	PMP-110-04	I-112	ETHERNET	%	0	100	NIP-300	0	-	-	PMP-110-04 CONTROLLED BY VFD-110-04
52	MAH-110-05	INFLUENT PS, PUMP NO. 5 SEAL LEAK ALARM	PMP-110-05	I-112	ETHERNET	N/A	-	-	NIP-300	0	-	-	PMP-110-05 CONTROLLED BY VFD-110-05
53	TAH-110-05	INFLUENT PS, PUMP NO. 5 OVERTEMP ALARM	PMP-110-05	I-112	ETHERNET	N/A	-	-	NIP-300	0	-	-	PMP-110-05 CONTROLLED BY VFD-110-05
54	YI-110-05A	INFLUENT PS, PUMP NO. 5 READY	PMP-110-05	I-112	ETHERNET	N/A	-	-	NIP-300	0	-	-	PMP-110-05 CONTROLLED BY VFD-110-05
55	YI-110-05B	INFLUENT PS, PUMP NO. 5 RUNNING	PMP-110-05	I-112	ETHERNET	N/A	-	-	NIP-300	0	-	-	PMP-110-05 CONTROLLED BY VFD-110-05
56	HS-110-05	INFLUENT PS, PUMP NO. 5 IN REMOTE	PMP-110-05	I-112	ETHERNET	N/A	-	-	NIP-300	0	-	-	PMP-110-05 CONTROLLED BY VFD-110-05
57	XA-110-05	INFLUENT PS, PUMP NO. 5 FAULT	PMP-110-05	I-112	ETHERNET	N/A	-	-	NIP-300	0	-	-	PMP-110-05 CONTROLLED BY VFD-110-05
58	YC-110-05	INFLUENT PS, PUMP NO. 5 START COMMAND	PMP-110-05	I-112	ETHERNET	N/A	-	-	NIP-300	0	-	-	PMP-110-05 CONTROLLED BY VFD-110-05

#	I/O Tag	Description	Equipment	P&ID Drawings	I/O Type	Units	Min	Max	PLC	Rack	Slot	Point	Comments
59	SI-110-05	INFLUENT PS, PUMP NO. 5 SPEED FEEDBACK	PMP-110-05	I-112	ETHERNET	%	0	100	NIP-300	0	-	-	PMP-110-05 CONTROLLED BY VFD-110-05
60	SC-110-05	INFLUENT PS, PUMP NO. 5 SPEED CONTROL	PMP-110-05	I-112	ETHERNET	%	0	100	NIP-300	0	-	-	PMP-110-05 CONTROLLED BY VFD-110-05
61	LSH-110-03	INFLUENT PS, WET WELL HIGH LEVEL ALARM	LSH-110-03	I-112	DIGITAL INPUT	FT	XX	-	CP-300	0	1	10	
62	LSHH-110-04	INFLUENT PS, WET WELL HIGH HIGH LEVEL ALARM	LSHH-110-04	I-112	DIGITAL INPUT	FT	XX	-	CP-300	0	1	11	
63	LI-110-05	INFLUENT PS, WET WELL LEVEL	LE/LIT-110-05	I-112	ANALOG INPUT	FT	XX	XX	CP-300	0	6	0	
64	FQ-110-11	12" RAW SEWAGE INFLUENT FLOWMETER FLOW PACE	FE/FIT-110-11	I-112	ETHERNET	GPM	-	XX	NIP-300	0	-	-	
65	FI-110-11	12" RAW SEWAGE INFLUENT FLOWMETER FLOW RATE	FE/FIT-110-11	I-112	ETHERNET	GPM	XX	XX	NIP-300	0	-	-	
66	FQ-110-12	24" RAW SEWAGE INFLUENT FLOWMETER FLOW PACE	FE/FIT-110-11	I-112	ETHERNET	GPM	-	XX	NIP-300	0	-	-	
67	FI-110-12	24" RAW SEWAGE INFLUENT FLOWMETER FLOW RATE	FE/FIT-110-11	I-112	ETHERNET	GPM	XX	XX	NIP-300	0	-	-	

(THIS PAGE LEFT BLANK INTENTIONALLY)

SECTION 40 61 96.13

PROCESS CONTROL DESCRIPTION – INFLUENT PUMP STATION PUMPS

PART 1 - GENERAL

1.01 SECTION INCLUDES

A. Instrumentation control loops.

1.02 REFERENCED SECTIONS

A. The following Sections are referenced in this Section

1. Section 01 33 00 – Submittals
2. Section 01 78 23 – Operation and Maintenance Information
3. Section 40 61 13 – Process Control System General Provisions

1.03 QUALITY ASSURANCE

A. See Specification Section 40 61 13.

1.04 SYSTEM DESCRIPTION

A. The control loop descriptions provide the functional requirements of the control loops represented in the Contract Documents.

B. Descriptions are provided as follows:

1. Control system overview and general description.
2. Major equipment to be controlled.
3. Major field mounted instruments (does not include local gages).
4. Manual control functions.
5. Automatic control functions/interlocks.
6. Major indications provided at local control panels and motor starters/VFD's.
7. Remote indications and alarms.

C. The control loop descriptions are not intended to be an inclusive listing of all elements and appurtenances required to execute loop functions, but are rather intended to supplement and complement the Drawings and other Specification Sections.

1. The control loop descriptions shall not be considered equal to a bill of materials.

D. Provide instrumentation hardware and software as necessary to perform control functions specified herein and shown on Drawings.

1.05 SUBMITTALS

A. See Section 01 33 00 for requirements for the mechanics and administration of the submittal process.

B. Contract Closeout Information:

1. Operation and Maintenance Data:

a. See Section 01 78 23 for requirements for the mechanics, administration, and the content of Operation and Maintenance Manual submittals.

C. Control Strategy for Record Documents:

1. Obtain this Specification Section in electronic format (Microsoft Word) from Engineer at beginning of Project.

2. Revise and update the file monthly during construction and start-up to reflect all changes that occur due to specific equipment and systems supplied on the Project.

a. Show all revisions in 'track change' mode.

b. Change Specification Section Title to read "Control Loop Descriptions - Contractor Record Document."

c. Reference all changes by Request for Information (RFI) number or Change Proposal Request (CPR) number.

d. Submit revised file monthly to Engineer for review.

D. Deliver the revised and updated file as a final control loop description Record Document in the Operation and Maintenance Manual described in Specification Section 01 78 23.

E. Provide both paper copy and electronic copy (on CD-ROM) of the Record Document control loop descriptions in the Operation and Maintenance Manual described in Specification Section 01 78 23.

PART 2 - PRODUCTS - (NOT USED)

PART 3 - EXECUTION

3.01 CONTROL LOOPS

A. This Section includes control loops for Phase 1. The Phase 1 package that each control loop is associated with is noted below. Programming and other work associated with Phase 1 control loops shall not be included in the bid price for Phase 2.

CONTROL STRATEGY 2 – INFLUENT PUMP STATION PUMPS

1.1 REFERENCES

A. Drawings:
   1. M-110, M-111, M-112, M-113, M-114
   2. E-051, E-110, E-111, E-112, E-113, E-901, E-902, E-903, E-904, E-905, E-906
   3. I-110, I-111

B. Specifications:
   1. Section 40 05 62, Eccentric Plug Valve
   2. Section 40 05 65.23, Swing Check Valves.
   3. Section 40 71 00, Flow Measurement
   4. Section 43 25 02, Submersible Wastewater Pumps Solids Handling

1.2 SYSTEM COMPONENTS

A. Major Mechanical Equipment & Motors
   1. Pumps: PMP-110-01, PMP-110-02, PMP-110-03, PMP-110-04, PMP-110-05
   2. Temperature Switches: TS-110-01, TS-110-02, TS-110-03, TS-110-04, TS-110-05
   3. Moisture Switches: MS-110-01, MS-110-02, MS-110-03, MS-110-04, MS-110-05

B. Level & Flow Instruments
   1. Level Element/Indicator/Transmitter LE/LIT-110-05
   2. Level Switches LSH-110-01, LSHH-110-02, LSH-110-03
   3. Flow Meter and Indicator/Transmitter FE/FIT-110-11, FE/FIT-110-12

C. Other Mechanical Devices:
   1. Air Release Valves ARV-110-01, ARV-110-02, ARV-110-03, ARV-110-04, ARV-110-05

D. Local Control Station with the following:
   1. LOCAL/OFF/REMOTE switches: HS-110-01, HS-110-02, HS-110-03, HS-110-04, HS-110-05
   2. START pushbuttons
   3. STOP pushbuttons
   4. SPEED potentiometer
   5. RUNNING & FAULT indicator lights
   6. FAST STOP pushbutton

E. MCC Devices
   1. VFD-110-01, VFD-110-02, VFD-110-03, VFD-110-04, VFD-110-05

1.3 DESCRIPTION

The Influent Pump Station (IPS) receives raw sewage from the collection system and pumps it into the wastewater treatment plant. The IPS consists of a concrete wet well with five submersible solids handling pumps in it. There are 2 small pumps (PMP-110-01 & PMP-110-02) and 3 large pumps (PMP-110-03, PMP-110-04, & PMP-110-05). Each pump has a VFD and LOCAL/OFF/REMOTE switch. The large pumps discharge into a large force main and the small pumps discharge into a small force main. There is an interconnect between the large and small force mains that can be used during emergencies. Both force mains discharge to the Raw Sewage Screening Facility. The IPS wet well is equipped with a Level Transmitter LE/LIT-110-05 and 2 level float switches (LSH-110-01 at 502.50’ and LSHH-110-02 at 503.50’) to monitor the water surface elevation in the wet well. Flow meter FE/FIT-110-11 measures the flow rate in the small force main and flow meter FE/FIT-110-12 measures the flow rate in the large force main. The upstream manhole has an overflow float switch LSH-110-03 which shall be adjustable between elevations 503.50 to 517.50.

Normal Automatic Operation

The small pumps shall be configured in a Lead/Lag arrangement. The large pumps shall be configured in a Lead/Lag/Standby arrangement. The pumps should be cycled through the positions (Lead, Lag and Standby) by the PLC based on run time hours to equalize use of all three pumps.

The number of pumps running and the speed of the pumps shall be determined by the water surface level in the pump wet well as described below:

- No Pump Operation:
    - When the water surface elevation in the wet well is below 498.00', the pumps shall be off.
    - If the water surface elevation drops to the low level (497.00') or low-low level (496.25'), an alarm shall be triggered.
    - When the water surface rises above the elevation of 498.50', start 1 Small Pump Operation at low speed.
- 1 Small Pump Operation (Estimated Flow Range of 0.5-1.8 MGD):
    - If the water surface level decreases below the elevation of 498.00' setpoint while the pump is operating at minimum, the pump shall turn off and return to No Pump Operation.
    - The pump speed shall be increased or decreased linearly with the water surface elevation.
    - If the water surface level reaches the elevation of 499.50' while the pump is operating at full speed, switch to 2 Small Pump Operation with both pumps operating at low speed.
- 2 Small Pumps Operation (Estimated Flow Range of 1.8-2.9 MGD):
    - If the water surface level decreases below the elevation of 499.00' while both pumps are operating at low speed, one pump shall turn off and return to 1 Small Pump Operation.
    - Both pumps speeds shall match, increasing or decreasing linearly with the water surface elevation.
    - If the water surface level reaches the elevation of 500.00' while the pumps are operating at high speed, turn off both small pumps and switch to 1 Large Pump Operation at low speed.
- 1 Large Pump Operation (Estimated Flow Range of 2.9-7.2 MGD):
    - If the water surface level decreases below the elevation of 499.50' while the pump is operating at low speed, send an alert to the Operator who will decide whether to remain in 1 Large Pump Operation or return to 2 Small Pump Operation.
    - The pump speed shall be increased or decreased linearly with the water surface elevation.
    - If the water surface level reaches the elevation of 500.50' while the pump is operating at high speed, switch to 2 Large Pump Operation with both pumps operating at low speed.
- 2 Large Pumps Operation (Estimated Flow Range of 7.2-12.4 MGD):
    - If the water surface level decreases below the elevation of 500.00' while both pumps are operating at low speed, one pump shall turn off and return to 1 Large Pump Operation.
    - Both pumps speeds shall match, increasing or decreasing linearly with the water surface elevation.
    - If the water surface level reaches the elevation of 501.50' while the pumps are operating at high speed, send an alert to the Operator who will decide the next mode of operation.
    - If the water surface elevation reaches the high level (502.50') or high-high level (503.50'), an alarm shall be triggered.

Cleaning Cycle

A cleaning cycle shall occur about once a week to clean the wet well. The cleaning cycle will occur in manual mode. The Operator will use the IPS gate to control the water as described in Section 40 61 96.14. The Operator will run Pump PMP-110-05 at the end of the trench until the wet well is almost fully empty and then return to automatic mode.

Level Indicator or PLC Failure

If there is a failure of the Level Indicator or PLC, IPS operations will shift to backup level switch floats LSH-110-01, LSHH-110-02, and timers. The pumps shall be capable of operating independently of either the level sensor or PLC. If the water surface elevation reaches the high level float switch LSH-110-01, one large pumps shall turn on and run on a timer for approximately 4 minutes. If the high-level switch remains activated, the one large pump shall continue to run and shall not turn off at the timed interval. If the water surface elevation reaches the high-high level switch, two large pumps shall turn on and run on a timer for approximately 7 minutes. If the high-high level switch continues to alarm, two large pumps shall continue to run.

1.4 LOCAL MANUAL OPERATION

Local manual operation of the Pumps can be initiated by setting the LOCAL/OFF/REMOTE switch, at the equipment to "LOCAL". The START and STOP pushbuttons and SPEED control dials can then be used to turn pumps on/off. The speed of the pumps may be adjusted manually at the MCC.

1.5 REMOTE MANUAL OPERATION

Remote manual operation of the Pumps can be initiated by setting the LOCAL/OFF/REMOTE switch, at the equipment to "REMOTE". Then, from the Pump Station graphic display screen on the SCADA system, the MANUAL/AUTO selector switch for each piece of equipment should be toggled to MANUAL. The equipment can then be controlled with the controls on the SCADA control screen.

1.6 REMOTE AUTOMATIC OPERATION

Remote automatic operation of the Pumps can be initiated by setting the LOCAL/OFF/REMOTE switch, at the equipment to "REMOTE". Then, from the IPS graphic display screen on the SCADA system, the MANUAL/AUTO selector switch for each piece of equipment should be toggled to AUTO. The equipment will then be controlled automatically as described in Paragraph 1.3.

1.7 SUMMARY OF LOOP FUNCTIONS

A. Refer to the I/O list, P&IDs, and PLC drawings.

1.8 SCADA DISPLAY

A. Pump Start Set Point

B. Pump Stop Set Point

C. Pump Stop All Set Point

D. Pump Designation (LEAD.LAG)

E. Pump Overtemp Alarm

F. Pump Seal Failure Alarm

G. Pump Running Indication

H. Pump Ready Indication

I. Pump Fault Alarm Indication

J. Pump In Local Indication

K. Pump Speed Indication (0 – 100%)

L. Pump VFD Loss of Communication Alarm

M. Wet Well Level Transmitter Level Indication

N. Wet Well Level Transmitter Low Level Indication

O. Wet Well Transmitter High Level Indication

P. Wet Well Level Transmitter Loss of Communication Alarm Indication

Q. Wet Well High Level Float Switch Alarm Indication

R. Wet Well High High Float Switch Alarm Indication

S. Small Force Main Flow

T. Large Force Main Flow

1.9 HISTORICAL TRENDING

A. Wet Well Level

B. Pump Speed for each Pump

C. Run Time Hours for each Pump

D. Flows
   1. Small Force Main
   2. Large Force Main

1.10 ALARMS

A. Pump FAULT – Reset by pressing the VFD fault reset button on the VFD or placing the LOR selector switch at the Local Control Station in the OFF position.

B. Pump OVERTEMP – Reset by pressing the reset button on the motor protection relay at the VFD.

C. Pump SEAL LEAK - Reset by pressing the reset button on the motor protection relay at the VFD.

D. PUMP VFD – LOSS OF COMMUNICATION

E. Level Transmitter HIGH

F. Level Transmitter LOW

G. Level Transmitter LOSS OF COMMUNICATION

H. Wet Well HIGH Level

I. Wet Well HIGH HIGH Level

1.11 INTERLOCKS

A. The HIGH level and HIGH HIGH level float switches are hard wired to the pump VFD.

B. The pump motor protection relay overtempt and seal leak switches are hard wired to the pump VFD.

SECTION 40 61 96.14

PROCESS CONTROL DESCRIPTION – INFLUENT PUMP STATION GATE

PART 1 - GENERAL

1.01 SECTION INCLUDES

A. Instrumentation control loops.

1.02 REFERENCED SECTIONS

A. The following Sections are referenced in this Section

1. Section 01 33 00 – Submittals
2. Section 01 78 23 – Operation and Maintenance Information
3. Section 40 61 13 – Process Control System General Provisions

1.03 QUALITY ASSURANCE

A. See Specification Section 40 61 13.

1.04 SYSTEM DESCRIPTION

A. The control loop descriptions provide the functional requirements of the control loops represented in the Contract Documents.

B. Descriptions are provided as follows:

1. Control system overview and general description.
2. Major equipment to be controlled.
3. Major field mounted instruments (does not include local gages).
4. Manual control functions.
5. Automatic control functions/interlocks.
6. Major indications provided at local control panels and motor starters/VFD's.
7. Remote indications and alarms.

C. The control loop descriptions are not intended to be an inclusive listing of all elements and appurtenances required to execute loop functions, but are rather intended to supplement and complement the Drawings and other Specification Sections.

1. The control loop descriptions shall not be considered equal to a bill of materials.

D. Provide instrumentation hardware and software as necessary to perform control functions specified herein and shown on Drawings.

1.05 SUBMITTALS

A. See Section 01 33 00 for requirements for the mechanics and administration of the submittal process.

B. Contract Closeout Information:

1. Operation and Maintenance Data:

a. See Section 01 78 23 for requirements for the mechanics, administration, and the content of Operation and Maintenance Manual submittals.

C. Control Strategy for Record Documents:

1. Obtain this Specification Section in electronic format (Microsoft Word) from Engineer at beginning of Project.

2. Revise and update the file monthly during construction and start-up to reflect all changes that occur due to specific equipment and systems supplied on the Project.

a. Show all revisions in 'track change' mode.

b. Change Specification Section Title to read "Control Loop Descriptions - Contractor Record Document."

c. Reference all changes by Request for Information (RFI) number or Change Proposal Request (CPR) number.

d. Submit revised file monthly to Engineer for review.

D. Deliver the revised and updated file as a final control loop description Record Document in the Operation and Maintenance Manual described in Specification Section 01 78 23.

E. Provide both paper copy and electronic copy (on CD-ROM) of the Record Document control loop descriptions in the Operation and Maintenance Manual described in Specification Section 01 78 23.

PART 2 - PRODUCTS - (NOT USED)

PART 3 - EXECUTION

3.01 CONTROL LOOPS

A. This Section includes control loops for Phase 1. The Phase 1 package that each control loop is associated with is noted below. Programming and other work associated with Phase 1 control loops shall not be included in the bid price for Phase 2.

CONTROL STRATEGY 1 – INFLUENT PUMP STATION GATE

1.1 REFERENCES

A. Drawings:
   1. M-110, M-111, M-112, M-113, M-114
   2. E-052, E-110, E-111, E-112, E-901, E-902, E-903, E-904
   3. I-110, I-111

B. Specifications:
   1. Section 40 05 59 Hydraulic Gates
   2. Section 40 05 57.23 Powered Valve Operators & Appurtenances

1.2 SYSTEM COMPONENTS

A. Slide Gate: SLG-110-00

B. LOCAL/OFF/REMOTE selector switch: HS-110-00

C. OPEN/CLOSE selector switch: HS-110-00

D. Gate Position Indicator: ZIT 110-00

1.3 DESCRIPTION

The Influent Pump Station (IPS) Gate is located inside the IPS on the wall with the influent pipe. The gate is used to control water entering the IPS.

During normal operation, the gate will be parked in the up position and all flow will be conveyed into the IPS wet well. During IPS cleaning cycles, the gate may need to be partially closed. The gate can also be closed to perform maintenance on the IPS.

The top of the slide gate is at elevation 501.50’ in the closed position. The bottom of the slide gate is at 498.00’ in the closed position. The control algorithm will convert this maximum travel in percent gate open. Specifically, if the gate is at the 0% position (Closed), then this will correspond to the bottom of the gate at elevation 498.00’. Likewise, if the gate is at 100% position (Open), then the bottom of the gate will be at elevation 501.50’. Gate positions between these two endpoints will be in direct linear proportion.

The operator shall be able to set the elevation of the bottom of the slide gate to any percent open or closed.

Any time the gate is closed, there shall be an alarm that warns the operator that the gate is closed.

1.4 LOCAL MANUAL OPERATION

Local manual operation of the IPS Gate can be initiated by setting the LOCAL/OFF/REMOTE switch at the gate actuator to “LOCAL”. The slide gate can then be operated using the OPEN/CLOSE switch at the gate actuator.

1.5 REMOTE MANUAL OPERATION

Remote manual operation of the IPS Gate can be initiated by setting the LOCAL/OFF/REMOTE switch at the gate actuator to “REMOTE.” Then, from the IPS Gate graphic display screen on the SCADA system, the MANUAL/AUTO selector switch for the gate should be toggled to MANUAL. The gate can then be opened, closed, and stopped at any mid-position by using the OPEN, STOP, and CLOSE pushbuttons on the SCADA control screen.

1.6 REMOTE AUTOMATIC OPERATION

Remote automatic operation of the IPS Gate can be initiated by setting the LOCAL/OFF/REMOTE switch at the gate actuator to "REMOTE." Then, from the IPS Gate graphic display screen on the SCADA system, the MANUAL/AUTO selector switch for the gate should be toggled to MANUAL. The gate will then be controlled automatically based on the water surface elevation in the Flow Control Structure as described in Paragraph 1.3.

1.1 SUMMARY OF LOOP FUNCTIONS

A. Refer to the I/O list, P&IDs, and PLC drawings.

1.2 SCADA DISPLAY

A. Gate Position

B. In Remote

C. Fault

D. Open Command

E. Close Command

1.3 ALARMS

A. Gate Closed Alarm

SECTION 40 63 00

CONTROL SYSTEM EQUIPMENT

PART 1 - GENERAL

1.01 SUMMARY

A. Section Includes

1. This section contains the requirements pertaining to the construction and installation of the control panels.

1.02 REFERENCES

A. The following is a list of standards which may be referenced in this section:

1. National Electrical Contractors Association (NECA)
2. National Electrical Installation Standard (NEIS)
   a. 5055, Standard of Installation
3. National Fire Protection Association (NFPA)
   a. 70, National Electrical Code (NEC)
   b. 79, Electrical Standard for Industrial Machinery
4. Underwriters Laboratories, Inc. (UL)
   a. 3121-1, Standard for Safety for Process Control Equipment
   b. 508, Industrial Control Equipment
   c. 698A, Standard for Industrial Control Panels Relating to Hazardous (Classified) Locations
5. National Electrical Manufacturer's Association (NEMA)
   a. 250, Enclosures for Electrical Equipment
   b. ICS 1-2000, Industrial Control and Systems General Requirements

1.03 SUBMITTALS

A. Contractor shall submit all the product data in Division 40 at the same time. Piecemeal submittals will be rejected as incomplete.

B. Submittal Format:

1. The product data shall be provided as individual PDFs for each Section, unless otherwise noted for specific items. Each PDF shall be numbered to match the specification Section numbers. Submittals not itemized and labeled as specified will be rejected as incomplete.
2. A submittal is required for each product specified. Each individual product submittal shall have the corresponding Reference Keynote Number (example - 16000.A01) typewritten in the upper right hand corner of the submittal. The submittals within each Section tab shall be in the same sequential order as they

are listed in the specification Section. Submittals not containing the Reference Keynote Number will be rejected as incomplete.

3. No typical submittals will be accepted. Each submittal shall be project specific and clearly identify specifically which components or parts are being submitted for approval. Any product submittals, such as a catalog sheet, which do not clearly identify which components or parts are being submitted for approval, will be rejected as incomplete.

4. Submittals in PDF shall include an index, table of contents, or bookmarks with hyperlinks to the associated page of all submitted items. Index shall include each product specified with their corresponding Reference Keynote Number. Electronic submittals not containing a linked index, table of contents, or bookmarks will be rejected as incomplete.

C. Refer to Section 26 05 00 – Common Work Results for Electrical Submittals for additional requirements.

D. Product Data

1. Pursuant to Section 01 33 00 – Submittals.

2. Manufacturer's data including materials of construction, methods of installation and related information for each item specified in PART 2 PRODUCTS.

E. Shop Drawings

1. Dimensional drawings showing the overall length, width, and height of the assembled control panel. Included on these drawings shall be the back panel layout of installed control devices showing part numbers, dimensions, nameplate text, and other details required for a complete assembly. The CONTRACTOR shall obtain the Drawings for the control panel layout and schematic from the ENGINEER. The CONTRACTOR shall modify the Drawings as required for submittal and for as-built documentation. The CONTRACTOR shall not generate their own drawings.

2. For large control panel, physical properties, handling, mounting, shipping break point locations shall be shown in submittal drawings. This shall include total weight, lifting instructions, height, and floor space required.

3. Provide electrical schematic drawings that include: wiring details such as internal and field connection terminal block numbers; shielded wire termination requirements; grounding requirements; and wire colors. Show all required internal and external interlocking. Each drawing shall be circuit specific for the system submitted. No typical schematic drawings shall be submitted.

4. Drawings shall list the equipment number of the box, control panel, or center submitted.

5. Component designations shall match those shown on the Drawings.

6. Complete bills of materials shall be included with submittal.

1.04 QUALITY ASSURANCE

A. Qualifications

1. Equipment provided as part of this section shall be manufactured by a single licensed firm, regularly engaged in the design and manufacture of such equipment for a minimum of five years. The control panels shall have a UL508A listing. Components within control panels shall be listed in a manner consistent with UL508A requirements.

1.05 MAINTENANCE

A. Manufacturer shall provide and list in the bill of materials the following spare parts.

1. One each of all power and control fuses provided in the assembled control panel/ center.

B. Provide Operation and Maintenance Data and Manuals Pursuant to the Contract Documents.

PART 2 - PRODUCTS – NOT USED

PART 3 - EXECUTION

3.01 INSTALLERS

A. All identification labeling shall be in compliance with Section 26 05 53 Identification for Electrical Systems.

B. CONTRACTOR shall install and connect junction boxes and control panels and to field devices as shown on the Drawings.

C. For all conductors terminating on terminal strips, install crimp-on, insulated plastic sleeve ferrules on each wire. Install ferrules with a crimping tool provided by the ferrule manufacturer for that purpose.

D. Individual conductors and cables shall be grouped together and routed through plastic wire ducts mounted on the backpanel surface.

E. Bond each enclosure back-panel to the grounding electrode system with a # 8 AWG copper conductor.

F. Where conductors and cables are routed in boxes or enclosures, they shall be neatly bundled with cable ties at intervals not to exceed 12 inches on center. The tension for the cable ties shall be set with a tool specifically made for this purpose and of the same manufacturer as the cable tie. Side cutters or other type tools shall not be used to cut the tail end of the cable tie. The CONTRACTOR shall only use the tool specifically made for this purpose and designed for use with the cable ties provided.

G. Conduits that enter/exit control system equipment shall be installed on opposite sides of the enclosure to prevent EMF interference and to achieve Code required separation is maintained between power, control and signal conduits. Power conduits shall not be installed in the same location on the enclosure as the control and signal conduits.

3.02 SOURCE QUALITY CONTROL

A. Tests and Inspections

1. CONTRACTOR shall notify the ENGINEER 14 days prior to commencement of shop testing. All equipment shall be tested prior to site delivery.

2. CONTRACTOR-developed test forms shall accompany the notification of testing.

a. Test forms shall list all field connections at terminal strips and all internal logic circuits, along with the method planned for simulation of field conditions to test these connections and circuits.

3. All analog instrument loops shall be tested using an analog signal generator by applying the appropriate control signal to the field termination terminal strip.

a. At a minimum, analog instrument tests shall be made at 0%, 25%, 50%, 75%, and 100% of maximum control signal.

b. Additional analog instrument tests shall be made as appropriate.

4. All digital control circuits shall be tested by: applying the appropriate control voltage to the field termination terminal strip when externally supplied; using a jumper at the field termination terminal strip when internally supplied; or, if applicable, at an internal panel connection point when field terminations are not used.

B. Verification of Performance

1. Device functions shall be observed by the ENGINEER, to determine satisfactory operation of the device and connected circuit continuity, prior to shipment.

3.03 FIELD QUALITY CONTROL

A. Site Tests, Inspection

1. CONTRACTOR shall install, calibrate and test, all systems prior to notifying ENGINEER of witness testing verification.

2. The ENGINEER shall utilize the Process Control Test Certification included in Section 26 01 06 Starting and Adjusting to systematically verify the process control system is operating as designed. The CONTRACTOR shall perform the tasks necessary to confirm proper operation to the ENGINEER.

3.04 UPS

A. The CONTRACTOR shall configure the UPS, 24VDC power supply, and power storage devices using the Quint UPS-CONF software and Quint IFS-USB-DATACABLE. The following software settings shall be set by the CONTRACTOR:

1. System settings:

a. Number of power storage devices (batteries) and model number.

b. 24VDC power supply model number.

2. The UPS trigger thresholds shall be set by the CONTRACTOR as follows:

a. Warning – Battery Low – State of Charge: DISABLED.

b. Warning – Battery Low – Remaining Backup Time: DISABLED.

c. Warning – Battery Low – Battery Voltage: DISABLED.

d. Warning – Battery End of Lifetime – Remaining Life: DISABLED.

e. Alarm - Battery Low – State of Charge: 10%.

f. Alarm – Remaining Backup Time – TWO (2) HOURS.

g. Alarm - Battery Low – Battery Voltage: 20.4 VDC.

h. Alarm - Battery End of Lifetime – Remaining Lifetime: TWO (2) MONTHS.

3. A UPS Battery Alarm (switched 24VDC UPS output) shall consist of any of the following trigger thresholds. These alarms are pre-set by the manufacturer and cannot be changed:

a. Alarm – Battery Low – State of Charge

b. Alarm – Battery Low – Remaining Backup Time

c. Alarm – Battery End of Lifetime – Remaining Life Time

d. Alarm – Battery End of Lifetime – Quality Criteria

4. A UPS Charging signal (switched 24VDC UPS output) shall be configured by the CONTRACTOR and shall consist of any of the following:

a. Battery Charging

5. A UPS Battery Mode signal (switched 24VDC UPS output) shall be configured by the CONTRACTOR and shall consist of any of the following:

a. Battery Mode

B. The power storage devices shall be mounted on individual DIN rails per the Drawings. The power storage devices shall be secured at each end using Heavy Duty End Brackets.

C. The UPS settings shall be downloaded and saved to the UPS memory stick and given to the OWNER.

END OF SECTION

(THIS PAGE LEFT BLANK INTENTIONALLY)

SECTION 40 70 00

INSTRUMENTATION FOR PROCESS SYSTEMS

PART 1 - GENERAL

1.01 SUMMARY

A. Section Includes.

1. This Section contains the basic materials and methods required to install the measurement and control instrumentation system.

1.02 SUBMITTALS

A. Contractor shall submit all the product data in Division 40 at the same time. Piecemeal submittals will be rejected as incomplete.

B. Submittal Format:

1. The product data shall be provided as individual PDFs for each Section, unless otherwise noted for specific items. Each PDF shall be numbered to match the specification Section numbers. Submittals not itemized and labeled as specified will be rejected as incomplete.

2. A submittal is required for each product specified. Each individual product submittal shall have the corresponding Reference Keynote Number (example - 260000.A01) typewritten in the upper right hand corner of the submittal. The submittals within each Section tab shall be in the same sequential order as they are listed in the specification Section. Submittals not containing the Reference Keynote Number will be rejected as incomplete.

3. No typical submittals will be accepted. Each submittal shall be project specific and clearly identify specifically which components or parts are being submitted for approval. Any product submittals, such as a catalog sheet, which do not clearly identify which components or parts are being submitted for approval, will be rejected as incomplete.

4. Submittals in PDF shall include an index, table of contents, or bookmarks with hyperlinks to the associated page of all submitted items. Index shall include each product specified with their corresponding Reference Keynote Number. Electronic submittals not containing a linked index, table of contents, or bookmarks will be rejected as incomplete.

C. Refer to Section 26 05 00 – Common Work Results for Electrical Submittals for additional requirements.

D. Product Data

1. Pursuant to Section 01 33 00 – Submittal.

2. Manufacturer's data including materials of construction, methods of installation and related information for each item specified in PART 2 PRODUCTS.

PART 2 - PRODUCTS

2.01 MATERIALS

A. Insulated Wire Ferrules (407000.F30).

1. Ferrules shall be plastic sleeved and insulated.

2. Ferrules shall be color coded per the DIN Standard.

3. Provide Weidmuller ferrules, or approved equal.

PART 3 - EXECUTION

3.01 INSTALLATION

A. CONTRACTOR shall install and connect junction boxes, termination boxes, control panels, field devices, etc. as shown on the Drawings.

B. Conductor Terminations.

1. Provide ferrules on all conductors terminating on terminal strips.

2. Ferrules shall be installed with a tool supplied by the ferrule manufacturer design specifically for that purpose.

3. No more than one conductor shall be terminated on each side of a terminal block unless specifically shown otherwise on the Drawings.

C. Terminal Block Jumpers.

1. When connecting adjacent terminal blocks in a terminal strip to provide for common potentials, pre-manufactured bridge type jumpers supplied by the terminal manufacturer shall be used. These jumpers screw into and connect adjacent terminal blocks at the center of the terminal blocks.

2. Comb type jumper shall not be used.

3. Jumpers fabricated from short lengths of wire shall not be used.

D. Twisted Shielded Pair (TSP) Cable Preparation.

1. Strip cable insulation back only to the extent necessary to separate the individual conductors for termination. The shield shall be removed up to the point where the cable insulation has been removed.

2. Provide green heat shrink tubing on the full length of exposed drain wire from the point of termination back to where the cable insulation has been removed. The tubing shall be properly sized for the conductor and shall be shrunk after installation. Reference Section 26 05 83 Wiring Connections for specification requirements for heat shrink tubing.

3. The drain wire shall be grounded as indicated on the Drawings.

4. Provide black heat shrink tubing at the point where the cable insulation has been removed. The tubing shall be 3 inches long and shall extend 1.5 inches up the insulation and 1.5 inches down the individual conductors. The tubing shall be properly sized for the cable and shrunk after installation. No part of the shield and no un-insulated part of the drain wire shall extend beyond this tubing.

Reference Section 26 05 83 Wiring Connections for specification requirements for heat shrink tubing.

E. Equipment Grounding.

1. Each control panel, terminal box and junction box shall have a single grounding point consisting of a grounding bus bar. All grounding conductors terminating within the enclosure shall terminate on the ground bus. The ground bus bar shall be 100 percent copper with 10 percent spare opening for future use. Reference Section 26 05 26 Grounding And Bonding for specification requirements for grounding bus bar.

F. Conductor Splicing.

1. Conductors shall be spliced on terminal blocks installed for this purpose.

2. Conductors shall only be spliced where identified on the Drawings.

3. No other splicing methods shall be approved without prior approval by the ENGINEER.

G. Instrument and Control Device Mounting Brackets.

1. The instrument/control device mounting bracket available from the manufacturer shall be provided and installed as directed unless a detail Drawing indicates a custom mounting bracket shall be provided.

H. Terminal Block and Terminal Strip Identification.

1. Terminal blocks shall be identified as shown on the Drawings. Identification shall be provided on both sides of the terminal block. The plastic identification inserts shall be machine printed and provided by the manufacturer of the terminal blocks.

2. Terminal strips shall be identified as shown on the drawings.

I. Identification

1. All identification labeling shall be in compliance with Section 26 05 53 Identification For Electrical Systems.

3.02 FIELD QUALITY CONTROL

A. Site Tests.

1. Control and instrumentation related conductors shall be tested for resistance to ground through the use of an ohm meter and visual damage to the insulation. Grounded conductors (neutrals and negative conductors) shall be isolated from the grounding system before testing.

2. High voltage “meggers” shall not be used.

3. A conductor shall be replaced if the resistance reading is less than one meg-ohm.

4. CONTRACTOR shall record the results of these tests on the Continuity Test Certification forms and submit them to the ENGINEER as specified in Section 26 01 08 Electrical Testing.

END OF SECTION

(THIS PAGE LEFT BLANK INTENTIONALLY)

SECTION 40 71 00

FLOW MEASUREMENT

PART 1 - GENERAL

1.01 SUMMARY

A. Section Includes

1. This section includes the requirements pertaining to the measurement and control instruments.

1.02 REFERENCES

A. American National Standards Institute (ANSI).

1. 51.1-1979 - (R1993) - Process Instrumentation Terminology.

2. 5.1-1984 - (R1992) - Instrumentation Symbols and Identification.

B. Instrumentation, Systems, and Automation Society (ISA).

1. 5.3-1983 - Graphic Symbols for Distributed Control/Shared Display Instrumentation, Logic, and Computer Systems.

C. National Fire Protection Association (NFPA) 70 - National Electrical Code.

D. National Electrical Manufacturer's Association (NEMA).

1. 1-2000 - Industrial Control and Systems General Requirements.

E. Underwriters Laboratory (UL).

1. 508 - Industrial Control Equipment.

2. 3121-1 - Standard for Safety for Process Control Equipment.

1.03 DEFINITIONS

A. Manufacturer's Representative - manufacturer's authorized employee of the service division.

1.04 SUBMITTALS

A. Contractor shall submit all the product data in Division 26 at the same time. Piecemeal submittals will be rejected as incomplete.

B. Submittal Format:

1. The product data shall be provided as individual PDFs for each Section, unless otherwise noted for specific items. Each PDF shall be numbered to match the specification Section numbers. Submittals not itemized and labeled as specified will be rejected as incomplete.

2. A submittal is required for each product specified. Each individual product submittal shall have the corresponding Reference Keynote Number (example - 26000.A01) typewritten in the upper right hand corner of the submittal. The submittals within each Section tab shall be in the same sequential order as they

are listed in the specification Section. Submittals not containing the Reference Keynote Number will be rejected as incomplete.

3. No typical submittals will be accepted. Each submittal shall be project specific and clearly identify specifically which components or parts are being submitted for approval. Any product submittals, such as a catalog sheet, which do not clearly identify which components or parts are being submitted for approval, will be rejected as incomplete.

4. Submittals in PDF shall include an index, table of contents, or bookmarks with hyperlinks to the associated page of all submitted items. Index shall include each product specified with their corresponding Reference Keynote Number. Electronic submittals not containing a linked index, table of contents, or bookmarks will be rejected as incomplete.

C. Refer to Section 26 05 00 – Common Work Results for Electrical Submittals for additional requirements.

D. Product Data

1. Pursuant to Section 01 33 00 – Submittals.

E. Quality Assurance/Control Submittals

1. Manufacturers' instructions for each item specified in PART 2 PRODUCTS.

a. Complete user manual including installation, wiring schematic, programming, calibration, communication, diagnostics, troubleshooting, recommended spare parts, and maintenance recommendations or requirements.

1.05 SEQUENCING

A. CONTRACTOR shall not energize instrumentation until the completion of the continuity test certification and certification of installation by manufacturer's representative.

1.06 SYSTEM START UP, COMMISSIONING, AND OWNER'S TRAINING

A. Pursuant to Section 40 70 00 Instruments for Process Systems

PART 2 - PRODUCTS

2.01 EQUIPMENT

A. <u>Magnetic Flow Meter and Transmitter (407100.F30).</u>

1. Magnetic flow meter shall be provided as shown on the Drawings with a remote transmitter.

2. Provide a pair of ground rings for each meter installation. The ground rings shall be bonded to ground per the meter manufacturer's instructions.

3. Magnetic flow meters shall be FM approved non-incendive Class I, Division 2.

4. The meter body diameter shall be as shown on the Mechanical Drawings.

5. The meter body shall be flanged style with Class 150, A105, carbon steel flanges in accordance with ANSI B16.5.

6. The meter shall be equipped with a remote transmitter rated NEMA 4X and 24-VDC input power. The transmitter shall display instantaneous flow rate and totalized flow. The meter shall be configured to permit the transmission of instantaneous flow rate, and a pulsed output for totalizing flow, all transmitted via Ethernet / IP as shown on the Drawings.

7. Magnetic flow meters shall indicate, totalize, and transmit flow information.

8. Magnetic flow meters shall use pulsed AC measurement technology. Pulsed DC measurement technology is not acceptable.

9. Magnetic flow meters shall include an auto-zero feature.

10. Magnetic flow meters shall compensate for eddy currents.

11. Magnetic flow meters shall be designed for bi-directional measurement of flow in a full pipe with fluid conductivity as low as 5 µS/cm, without preamplifiers.

12. The electromagnetic induction flow meter shall generate a voltage linearly proportional to flow for full-scale velocity settings from one to 33 feet per second. Standard accuracy of the pulse output shall be ±0.5% of rate ±0.05% of full scale (33 ft/s) for all meters.

13. The flow meter shall be equipped with "heartbeat technology" which allows the end user the ability to verify calibration with the equipment left in place with their staff.

14. All components of the flow meter, including meter tube, sensors and recorder/totalizer shall be products of a single manufacturer.

15. Magnetic flow meter flow tubes shall be factory assembled units comprised of a carbon steel spool piece and sensors.

    a. Flow tube flanges shall be carbon steel, conforming to AWWA C110, and shall match the flange style of the piping to which they are connected.

    b. Flow tubes shall be provided with stainless steel retention bolts.

    c. Flow liner shall be polyurethane.

16. Magnetic flow meter sensors shall be solid state design, each with a pair of sensing electrodes, exciter coil, sensor reference coils, and internal grounding electrode.

    a. Magnetic flow meters shall be provided with a minimum of two opposed sensors to distribute the magnetic field over the entire cross-sectional area of the flow tube, and to allow continued operation and flow sensing, with reduced accuracy, in the event of a single sensor failure.

    b. Sensor grounding and sensing electrodes shall be stainless steel.

    c. Sensors shall automatically compensate for media noise including: electrochemical effects; entrained magnetic particles; particulate impact on electrodes; frictional effects against electrodes; variable conductivity; and coated electrodes.

    d. Sensor accuracy shall be unaffected by electrode coatings.

e. The meter shall incorporate a high impedance amplifier of 1012 ohms or greater, eliminating the effect of buildup on the electrodes. The meter shall utilize bipolar pulsed DC coil excitation with automatic coil-current fine tuning by the microcontroller to adjust the sensor current within a tolerance of ±100mA. The amplifier shall incorporate 3-stage signal processing to maintain system accuracy by the use of a 26 bit analog/digital converter. The first stage will adjust the common-mode rejection ratio to filter out noise. The second stage will incorporate an INTEGRATED AUTOZERO function, which compensates for any external interference signals and eliminates zero drift. Manual zero adjustments shall not be required even at start-up. In stage three, the measuring signal will be amplified by an AUTOGAIN function, depending on the actual amplitude of the flow signal, to automatically increase the measurement resolution at various flow rates, providing a turndown of at least 1000:1. To further ensure the specified accuracy, the electronics shall automatically perform internal temperature drift compensation. Power consumption shall be no more than 15 VA, independent of meter size. Upon any power failure, the unit will retain all setup parameters and accumulated measurements internally in non-volatile memory. All units will be protected against voltage spikes from the power source by utilizing internal transient protection.

17. The magnetic flow meter transmitter shall be microprocessor based with integral electronics. The flow meter shall have a 2-line push-button display used for programming as well as for simultaneous display of flow rate and total flow in user-selectable engineering units, and readout of diagnostic error messages, selectable from 12 standard languages. The microprocessor shall safeguard against entering of invalid data for the particular meter size, and all programming parameters shall be access-code protected. The electronics shall include infinitely adjustable low flow cutoff.

    a. Transmitter power supply shall be 24VDC as shown on the Drawings.

    b. Transmitter shall have Ethernet / IP capabilities with an RJ45 connection.

    c. Transmitters shall be shielded or filtered from common RF noise effects including: radio transmissions; variable frequency drives; etc.

    d. Transmitters shall be housed in a corrosion-resistant epoxy painted, cast aluminum, NEMA 4X (IP67) enclosure, suitable for conduit connections, and shall include a clear polycarbonate window to allow viewing of the display without opening the enclosure.

    e. Transmitter operation, configuration, and calibration shall be via the keypad with visual prompts and built-in help at the LCD display.

    f. The flow meter shall have the capability of being programmed remotely using HART/analog protocol.

    g. Transmitter display shall indicate flow rate and/or total flow in user-selectable units of measure.

h. Transmitters shall include:

1) Isolated, independently configurable 4-20 mA analog output. Response time shall be adjustable between 0.05 and 100 seconds.

2) Configurable pulse output for volume units per pulse, or frequency proportional to flow rate. Frequency shall be adjustable up to 10kHZ and pulse width shall be adjustable between 0.05 and 2 seconds.

3) Totalizers for forward, reverse, net, and gross total flow, with user-specified volume units.

4) Independently configurable contact inputs, programmable for measured value suppression, totalizer reset, or error-message reset.

18. The meter shall be provided with a minimum of 0.5% calibration.

19. The tests and the associated documentation will be able to be retained in an electronic format and convertible into a hard copy document compatible for customer review or printing. The technology is commonly referred to by the manufacturer as "Heartbeat Technology". The data format will define all meter settings, ranges, fail-safes, and configuration detail to conform to these requirements. Sensor model, serial number, and test result will be identified for each verification in a date recorded format.

20. The magnetic flow meter shall be an Endress+Hauser Proline Promag W 400 Series, or approved equal.

a.	C6	Approval = CSA C/US NI CI.1 Div.2 gr. U
b.	I	Design = Fixed Flange, 0 x DN Inlet/Outlet Runs
c.	L	Power Supply = 100-240VAC / 24 VAC/DC.
d.	N	Output; Input = Ethernet / IP Connection.
e.	M	Housing = INTEGRAL Transmitter, Compact Polycarbonate.
f.	0	Cable, Remote Version = NOT USED.
g.	D	Electrical Connection = Thread NPT ½ inch.
h.	U	Liner = Polyurethane.
i.	A1K	Process Conn. = 150, carbon steel, flange joint, ASME B16.5
j.	G	Electrodes = 1.4435/316L Bullet Nose.
k.	A	Calibration = 0.5%
l.	AA	Operation Language Display = English
m.	EB	Application Package = Heartbeat Verification + Monitoring

PART 3 - EXECUTION

3.01 INSTALLATION

A. General

1. All identification labeling shall be in compliance with Section 26 05 53 Identification For Electrical Systems.

2. Field wiring shall be installed according to the Drawings and manufacturer's instructions.

3. Wire and cable shall be connected from terminal to terminal without splices.

4. Wire and cable shall be arranged in a neat manner and securely supported in cable groups.

5. Wiring shall be protected from sharp edges and corners.

6. Float switches shall be installed using a stainless steel type CGB cord grip to seal the end of the conduit.

7. Transmitter connections shall be made using a terminal junction box, analog receptacles, and analog connectors as shown.

8. All equipment to be located as shown, and rigidly attached to walls or floor as shown or directed by Owner's Representative. Install all equipment in strict accordance with manufacturer's recommendations and in compliance with all rules and regulations of jurisdictions having authority. All work to be set plumb or level, as applicable, to be rigid and neat in appearance. Provide shop drawing of equipment and accessory layout and manufacturer's recommendations for installation and accessories before installing.

9. All piping shall be installed as shown on the plans or as directed by Owner's Representative.

10. All piping shall be supported as required to eliminate stresses on equipment including, but not limited to, the feed pump and chlorine tablet feeder.

B. HDPE Mounting Plate

1. HDPE Mounting Plate front edges shall be beveled as indicated on the Drawings to eliminate sharp edges.

3.02 ADJUSTING

A. The representative shall check the installation and supervise initial startup of the equipment. He shall certify that the installation is correct and that the equipment has operated satisfactorily

B. The overall accuracy of each instrumentation system or loop shall be as indicated in the specification for that system or loop. Each individual instrument shall have a minimum accuracy of ±0.5 percent of full scale and a minimum repeatability of ±0.25 percent of full scale unless otherwise indicated.

C. The Contractor shall furnish a representative of the manufacturer to perform inspection, startup and training services. The manufacturer's representative shall be experienced in the operation and maintenance of the equipment.

D. After the installation and operation of the equipment has been certified, the manufacturer's representative shall train the City's personnel in the proper operation and maintenance of the equipment.

END OF SECTION

SECTION 40 72 00

LEVEL MEASUREMENT

PART 1 - GENERAL

1.01 SUMMARY

A. Section Includes

1. This section includes the requirements pertaining to the level measurement and control instruments.

1.02 REFERENCES

A. American National Standards Institute (ANSI).

1. 51.1-1979 - (R1993) - Process Instrumentation Terminology.

2. 5.1-1984 - (R1992) - Instrumentation Symbols and Identification.

B. Instrumentation, Systems, and Automation Society (ISA).

1. 5.3-1983 - Graphic Symbols for Distributed Control/Shared Display Instrumentation, Logic, and Computer Systems.

C. National Fire Protection Association (NFPA) 70 - National Electrical Code.

D. National Electrical Manufacturer's Association (NEMA).

1. 1-2000 - Industrial Control and Systems General Requirements.

E. Underwriters Laboratory (UL).

1. 508 - Industrial Control Equipment.

2. 3121-1 - Standard for Safety for Process Control Equipment.

1.03 DEFINITIONS

A. Manufacturer's Representative - manufacturer's authorized employee of the service division.

1.04 SUBMITTALS

A. Contractor shall submit all the product data in Division 40 at the same time. Piecemeal submittals will be rejected as incomplete.

B. Submittal Format:

1. The product data shall be provided as individual PDFs for each Section, unless otherwise noted for specific items. Each PDF shall be numbered to match the specification Section numbers. Submittals not itemized and labeled as specified will be rejected as incomplete.

2. A submittal is required for each product specified. Each individual product submittal shall have the corresponding Reference Keynote Number (example - 26000.A01) typewritten in the upper right hand corner of the submittal. The submittals within each Section tab shall be in the same sequential order as they

are listed in the specification Section. Submittals not containing the Reference Keynote Number will be rejected as incomplete.

3. No typical submittals will be accepted. Each submittal shall be project specific and clearly identify specifically which components or parts are being submitted for approval. Any product submittals, such as a catalog sheet, which do not clearly identify which components or parts are being submitted for approval, will be rejected as incomplete.

4. Submittals in PDF shall include an index, table of contents, or bookmarks with hyperlinks to the associated page of all submitted items. Index shall include each product specified with their corresponding Reference Keynote Number. Electronic submittals not containing a linked index, table of contents, or bookmarks will be rejected as incomplete.

C. Refer to Section 26 05 00 – Common Work Results for Electrical Submittals for additional requirements.

D. Product Data

1. Pursuant to Section 01 33 00 – Submittals.

E. Quality Assurance/Control Submittals

1. Manufacturers' instructions for each item specified in PART 2 PRODUCTS.

a. Complete user manual including installation, wiring schematic, programming, calibration, communication, diagnostics, troubleshooting, recommended spare parts, and maintenance recommendations or requirements.

1.05 SEQUENCING

A. CONTRACTOR shall not energize instrumentation until the completion of the continuity test certification and certification of installation by manufacturer's representative.

1.06 SYSTEM START UP, COMMISSIONING, AND OWNER'S TRAINING

A. Pursuant to Section 40 80 00 Commissioning of Process Systems.

PART 2 - PRODUCTS

2.01 EQUIPMENT

A. <u>Submerged Hydrostatic Level Transducer (407200.L20)</u>.

1. Submerged hydrostatic level element shall be provided as shown on the Drawings.

2. Submerged hydrostatic level element shall be 24 VDC, loop powered.

3. CONTRACTOR shall determine correct sensor cable length based on installation requirements.

4. Submerged hydrostatic level element shall consist of variable capacitance, gauge pressure sensing assembly enclosed in submersible type 316 stainless steel housing with aluminum oxide ceramic sensor.

5. CONTRACTOR shall determine correct sensor range based on installation requirements.

6. Submerged hydrostatic level element seals shall be EPDM.

7. Submerged hydrostatic level element cables shall be mounted with cable-mounting screw.

8. Submerged hydrostatic level elements shall include a vented capillary tube that is protected from moisture intrusion by a Gore-Tex filter. The filter shall be located in the IP66/67 terminal box provided with the transmitter.

9. Submerged hydrostatic level element signal output shall be analog with flexible scaling of 4-20 mA HART in proportion to level.

10. The accuracy shall be ± 0.2% of the set span including hysteresis and non-repeatability; Long-term stability: ±0.1% of Upper Range Limit (URL) per year and must be capable of platinum accuracy of ± 0.1% of the set span.

11. Provide intrinsically safe barrier / relay as required.

12. Provide Endress & Hauser Waterpilot FMX21 transmitter model FMX21-CD-2-1-1K-G-E-25-A-PO-PU, or approved equal.

    a. CD Approval = CSA Class I, Div. 1, Grade A-D

    b. 2 Output; Input = 4-20mA HART

    c. 1 Probe Tube = 316L, d=0.87in

    d. 1K Sensor Range = CONTRACTOR shall determine correct sensor range based on installation requirements.

    e. G Reference Accuracy = Platinum.

    f. E Calibration = inH2O/ftH2O

    g. 25 Probe Connection = Shortable, PE cable. CONTRACTOR to determine lengths.

    h. A Seal = FKM Viton

    i. PO Accessory Enclosed = Suspension Clamp

    j. PU Accessory Enclosed = Additional Weight, 316L

B. <u>Non-Mercury Float Switch (407200.L50).</u>

1. Non-mercury float switches shall be provided as shown on the Drawings.

2. Non-mercury float switches shall be designed for use in drinking water applications.

3. Non-mercury float switches shall be designed as an assembled unit incorporating a float body, snap-action SPDT microswitch, mechanical activation mechanism, cable, and protective strain relief.

4. Non-mercury float switches shall be direct acting.

5. Non-mercury float switches shall be rated for 250V/10A AC and 30V/5A DC.

6. Non-mercury float switch bodies shall be constructed from welded polypropylene. Adhesively assembled float switch bodies are not acceptable.

7. Non-mercury float switch bodies shall be 4” in diameter, minimum.

8. Non-mercury float switches shall include a 60 foot length cable.

9. Non-mercury float switches cables shall be multi-stranded, 3 conductor, 19 gauge, CPE jacketed cable.

10. Non-mercury float switches shall include an EPDM rubber protective sleeve to provide cable strain relief.

11. Provide Gems Sensors, Dwyer, Anchor Scientific, or approved equal.

PART 3 - EXECUTION

3.01 INSTALLATION

A. General

1. All identification labeling shall be in compliance with Section 26 05 53 Identification For Electrical Systems.

2. Field wiring shall be installed according to the Drawings and manufacturer’s instructions.

3. Wire and cable shall be connected from terminal to terminal without splices.

4. Wire and cable shall be arranged in a neat manner and securely supported in cable groups.

5. Wiring shall be protected from sharp edges and corners.

6. Float switches shall be installed using a stainless steel type CGB cord grip to seal the end of the conduit.

7. Transmitter connections shall be made using a terminal junction box, analog receptacles, and analog connectors as shown.

8. All equipment to be located as shown, and rigidly attached to walls or floor as shown or directed by Owner’s Representative. Install all equipment in strict accordance with manufacturer's recommendations and in compliance with all rules and regulations of jurisdictions having authority. All work to be set plumb or level, as applicable, to be rigid and neat in appearance. Provide shop drawing of equipment and accessory layout and manufacturer’s recommendations for installation and accessories before installing.

9. All piping shall be installed as shown on the plans or as directed by Owner’s Representative.

10. All piping shall be supported as required to eliminate stresses on equipment including, but not limited to, the feed pump and chlorine tablet feeder.

3.02 SLACK CABLE FOR INSTRUMENTS IN WET WELLS

A. Provide all sensors, switches, and transducers with excess cable to allow the probes to be lowered to the bottom of the wetwell as required to test probe operation by manually lowering to the water level.

3.03 ADJUSTING

A. The representative shall check the installation and supervise initial startup of the equipment. He shall certify that the installation is correct and that the equipment has operated satisfactorily. In the case of the graphic data manager, the manufacturer's representative shall configure the device for downloading data to a Compatible USB memory stick (thumb drive) and assist the OWNER's staff in loading the Read Win PC 2000 software and the integration with the OWNER's existing MS Excel software for downloading spreadsheets to record flow measurements on a daily, weekly, monthly and annual basis.

B. The overall accuracy of each instrumentation system or loop shall be as indicated in the specification for that system or loop. Each individual instrument shall have a minimum accuracy of ±0.5 percent of full scale and a minimum repeatability of ±0.25 percent of full scale unless otherwise indicated.

C. The Contractor shall furnish a representative of the manufacturer to perform inspection, startup and training services. The manufacturer's representative shall be experienced in the operation and maintenance of the equipment.

D. The representative shall check the installation and supervise initial startup of the equipment. He shall certify that the installation is correct and that the equipment has operated satisfactorily.

E. The representative shall check the installation and supervise initial startup of the equipment. He shall certify that the installation is correct and that the equipment has operated satisfactorily. In the case of the graphic data manager, the manufacturer's representative shall configure the device for downloading data to a Compatible USB memory stick (thumb drive) and assist the OWNER's staff in loading the Read Win PC 2000 software and the integration with the OWNER's existing MS Excel software for downloading spreadsheets to record flow measurements on a daily, weekly, monthly and annual basis.

F. After the installation and operation of the equipment has been certified, the manufacturer's representative shall train the City's personnel in the proper operation and maintenance of the equipment.

END OF SECTION

(THIS PAGE LEFT BLANK INTENTIONALLY)

SECTION 40 78 00

PANEL MOUNTED EQUIPMENT

PART 1 - GENERAL

1.01 SUMMARY

A. Section Includes

1. This section contains the requirements pertaining to the construction and installation of the control panels.

1.02 REFERENCES

A. The following is a list of standards which may be referenced in this section:

1. National Electrical Contractors Association (NECA)
2. National Electrical Installation Standard (NEIS)
   a. 5055, Standard of Installation
3. National Fire Protection Association (NFPA)
   a. 70, National Electrical Code (NEC)
   b. 79, Electrical Standard for Industrial Machinery
4. Underwriters Laboratories, Inc. (UL)
   a. 3121-1, Standard for Safety for Process Control Equipment
   b. 508, Industrial Control Equipment
   c. 698A, Standard for Industrial Control Panels Relating to Hazardous (Classified) Locations
5. National Electrical Manufacturer's Association (NEMA)
   a. 250, Enclosures for Electrical Equipment
   b. ICS 1-2000, Industrial Control and Systems General Requirements

1.03 SUBMITTALS

A. Contractor shall submit all the product data in Division 40 at the same time. Piecemeal submittals will be rejected as incomplete.

B. Submittal Format:

1. The product data shall be provided as individual PDFs for each Section, unless otherwise noted for specific items. Each PDF shall be numbered to match the specification Section numbers. Submittals not itemized and labeled as specified will be rejected as incomplete.
2. A submittal is required for each product specified. Each individual product submittal shall have the corresponding Reference Keynote Number (example - 260000.A01) typewritten in the upper right hand corner of the submittal. The submittals within each Section tab shall be in the same sequential order as they

are listed in the specification Section. Submittals not containing the Reference Keynote Number will be rejected as incomplete.

3. No typical submittals will be accepted. Each submittal shall be project specific and clearly identify specifically which components or parts are being submitted for approval. Any product submittals, such as a catalog sheet, which do not clearly identify which components or parts are being submitted for approval, will be rejected as incomplete.

4. Submittals in PDF shall include an index, table of contents, or bookmarks with hyperlinks to the associated page of all submitted items. Index shall include each product specified with their corresponding Reference Keynote Number. Electronic submittals not containing a linked index, table of contents, or bookmarks will be rejected as incomplete.

C. Refer to Section 26 05 00 – Common Work Results for Electrical Submittals for additional requirements.

D. Product Data

1. Pursuant to Section 01 33 00 – Submittals.

2. Manufacturer's data including materials of construction, methods of installation and related information for each item specified in PART 2 PRODUCTS.

E. Shop Drawings

1. Dimensional drawings showing the overall length, width, and height of the assembled control panel. Included on these drawings shall be the back panel layout of installed control devices showing part numbers, dimensions, nameplate text, and other details required for a complete assembly. The CONTRACTOR shall obtain the Drawings for the control panel layout and schematic from the ENGINEER. The CONTRACTOR shall modify the Drawings as required for submittal and for as-built documentation. The CONTRACTOR shall not generate their own drawings.

2. For large control panel, physical properties, handling, mounting, shipping break point locations shall be shown in submittal drawings. This shall include total weight, lifting instructions, height, and floor space required.

3. Provide electrical schematic drawings that include: wiring details such as internal and field connection terminal block numbers; shielded wire termination requirements; grounding requirements; and wire colors. Show all required internal and external interlocking. Each drawing shall be circuit specific for the system submitted. No typical schematic drawings shall be submitted.

4. Drawings shall list the equipment number of the box, control panel, or center submitted.

5. Component designations shall match those shown on the Drawings.

6. Complete bills of materials shall be included with submittal.

1.04 QUALITY ASSURANCE

A. Qualifications

1. Equipment provided as part of this section shall be manufactured by a single licensed firm, regularly engaged in the design and manufacture of such equipment for a minimum of five years. The control panels shall have a UL508A listing. Components within control panels shall be listed in a manner consistent with UL508A requirements.

1.05 MAINTENANCE

A. Manufacturer shall provide and list in the bill of materials the following spare parts.

1. One each of all power and control fuses provided in the assembled control panel/ center.

B. Provide Operation and Maintenance Data and Manuals Pursuant to the Contract Documents.

PART 2 - PRODUCTS

2.01 COMPONENTS

A. Stainless Steel, NEMA 4X Enclosures (407800.E01).

1. Enclosures shall be provided as shown on the Drawings.

2. Enclosures shall be provided with accessories as shown on the Drawings and as specified below.

3. Enclosures in damp, wet, corrosive, or outdoor locations shall be: constructed of stainless steel (NEMA 4X) with zinc electroplated (galvanized) steel back-panel; continuous hinged with gasketed doors and screw down clamps.

4. Provide manufacturer supplied swing-out deadfront door within the enclosure.

5. Enclosures in outdoor locations shall be equipped with a hasp and staple for padlocking.

6. Provide Hoffman enclosures, or approved equal.

B. Panel Vents (407800.V01).

1. Panel Vents shall be provided as shown on the Drawings.

2. Provide Hoffman number ANMV3, or approved equal.

C. Enclosure Heater (407800.H17).

1. Enclosure heaters shall be provided as shown on the Drawings.

2. Enclosure heaters shall operate on 115 VAC.

3. Enclosure heaters shall be provided with integral mounted thermostats.

4. For 100W heaters, provide Hoffman model DAH1001A, or approved equal.

5. For 200W heaters, provide Hoffman model DAH2001A, or approved equal.

D. Miniature “Ice Cube” Relays (24 VDC) (407800.R05).

1. Provide relays as shown on Drawings.
2. Relays shall be industrial plug-in blade style with the on/off status indicated by either a neon or LED indicating light or by mechanical means.
3. Relays shall be Form C contacts with a minimum of 4 poles and 7-amp contact rating.
4. Relay coil voltage shall be 24VAC.
5. Provide with DIN rail mounting screw terminal socket and retainer clips.
6. Relay bases shall be of the same manufacturer as the relay.
7. Provide Allen-Bradley p/n 700-HC24A24 relays, p/n 700-HN104 screw terminal sockets, and p/n 700-HN114 retainer clips, or approved equal.

E. Time Delay Relays (407800.R12).

1. Time delay relays shall be provided as shown on the Drawings.
2. Time delay relays shall be either time delay on energize (TDOE), or time delay on de-energize (TDODE) as indicated on the Drawings.
3. Time delay relays shall be provided with a timing range as indicated on the Drawings.
4. Time delay relays shall be industrial plug-in blade style.
5. Time delay relays shall indicate the timed out status by either a neon indicating light, LED indicating light, or by mechanical means.
6. Time delay relays shall be provided with a minimum of three Form C contacts, and 10 Amp contact rating.
7. Time delay relay coil voltage shall be either 120 VAC or 24 VDC as indicated on the Drawings.
8. Time delay relays shall be provided with DIN rail mounting bases and hold down clips.
    a. Relay bases shall be of the same manufacturer as the relay.
9. Provide Idec RTE Series, or approved equal.

F. Control Fuses (407800.F01).

1. Control Fuses shall be provided as shown on the Drawings.
2. Control Fuses shall interrupt and isolate electrical power to individual control circuits and components within each enclosure and for circuits and components located outside each enclosure but deriving power from the enclosure.
3. Control Fuses shall be rated at 250 VAC minimum and with current ratings as shown on the Drawings.
4. Control Fuses shall have fast acting and time delay characteristics as dictated by the connected load.

5. Provide five (5) spare fuses of each type and size provided for each control panel.

6. Provide Ferraz-Shawmut type GGM, or approved equal.

G. Selector Switches (407800.S01).

1. Selector switches shall be provided as shown on the drawings.

2. Selector switches shall be of round construction with rotary operators.

3. Selector switches operation shall be to maintain the position turned to unless shown otherwise on the Drawings.

4. Selector switches shall be provided with the number of contacts, switch positions, and other details as shown on the Drawings.

5. Selector switches shall be rated NEMA 13 for indoor applications and NEMA 4 for outdoor applications.

6. Selector switch contacts shall be rated at 10 Amps.

7. Provide Allen-Bradley Bulletin 800T pilot devices (30mm, NEMA Type 4/4X/13), or approved equal.

H. Pushbutton Switch (407800.S02).

1. Pushbutton switches shall be provided as shown on the drawings.

2. Pushbutton switches shall be of round construction with push or push-pull operators.

3. Pushbutton switch operation shall be momentary or maintained as shown on the Drawings.

4. Pushbutton switches shall be provided with the number of contacts, switch positions, and other details as shown on the Drawings.

5. Pushbutton switches shall be rated NEMA 13 for indoor applications and NEMA 4X for outdoor applications.

6. Pushbutton switch contacts shall be rated at 10 Amps.

7. Provide Allen-Bradley Bulletin 800T pilot devices (30mm, NEMA Type 4/4X/13), or approved equal.

I. Key Switches (407800.S03).

1. Key switches shall be provided as shown on the drawings.

2. Key switches shall be of round construction with rotary operators.

3. Key switches operation shall be to maintain the position turned to unless shown otherwise on the Drawings.

4. Key switches shall be provided with the number of contacts, switch positions, and other details as shown on the Drawings.

5. Key switches shall be rated NEMA 13 for indoor applications and NEMA 4X for outdoor applications.

6. Key switch contacts shall be rated at 10 Amps.

7. Provide Allen-Bradley Bulletin 800T pilot devices (30mm, NEMA Type 4/4X/13), or approved equal.

J. Mushroom Style Pushbutton Switch (407800.S04).

1. Mushroom Style Pushbutton switches shall be provided as shown on the drawings.
2. Mushroom Style Pushbutton switches shall be of round construction with push or push-pull operators.
3. Mushroom Style Pushbutton switch operation shall be momentary or maintained as shown on the Drawings.
4. Mushroom Style Pushbutton switches shall be provided with the number of contacts, switch positions, and other details as shown on the Drawings.
5. Mushroom Style Pushbutton switches shall be rated NEMA 13 for indoor applications and NEMA 4X for outdoor applications.
6. Mushroom Style Pushbutton switch contacts shall be rated at 10 Amps.
7. Mushroom Style Pushbutton switches for Emergency Stop and other emergency switches (e.g., Help Me switches) shall be: provided with a red mushroom head; pull to reset; provided with N/C (failsafe) contacts; and shall be non-illuminated.
8. Provide Allen-Bradley Bulletin 800T pilot devices (30mm, NEMA Type 4/4X/13), or approved equal.

K. Indicator Lights (407800.L20).

1. Indicator lights shall be provided as shown on the drawings.
2. Indicator lights shall be of round construction.
3. Indicator lights shall have a built in push-to-test function.
4. Indicator light operation shall be as shown on the Drawings.
5. Indicator light lens colors shall be as shown on the Drawings.
6. Indicator lights shall be provided with high visibility LED lamps with transformers for circuit voltages over 24 VAC/DC, and high visibility LED lamps without transformers for circuits 24 VAC/DC and below.
7. Indicating lights shall be rated as NEMA 13 for indoor applications and NEMA 4X for outdoor applications.
8. Indicator light contacts shall be rated at 10 Amps.
9. Provide Allen-Bradley Bulletin 800T pilot devices (30mm, NEMA Type 4/4X/13), or approved equal.

L. Speed Setpoint Potentiometer (407800.P20).

1. Speed potentiometers shall be provided as shown on the Drawings.
2. Speed potentiometers shall be of round construction.
3. Speed potentiometers operation shall be as shown on the Drawings.

4. Speed potentiometers shall be 10k-ohm.

5. Provide Allen-Bradley 800H-UR29, or approved equal.

M. Terminal Strip Identification Block (407800.T15).

1. Provide a terminal strip identification block with a machine generated label to match those shown on the Drawings.

2. Provide a Phoenix Contact marker carrier model number UBE/D, or approved equal.

N. Low Current Terminal Blocks (407800.T10).

1. Low current terminal blocks shall be provided as shown on the Drawings and in all panels requiring low current field terminations. Provide accessories as required and as shown including, but not limited to end anchors, end barriers, bridge jumpers, terminal strip pre-printed markers and snap-in pre-printed terminal block markers.

2. Low current terminal blocks shall be used for electrical circuits rated at or less than 30 amps.

3. Low current terminal blocks shall mount on DIN rail.

4. Low current terminal blocks shall be supplied with all required accessories including end covers, fixed bridge bars, partition plates and end brackets.

5. Low current terminal blocks shall be supplied with machine printed terminal block and terminal strip identification numbers that match the approved submittals.

6. Low current terminal blocks shall be grey in color.

7. Low current terminal blocks shall be UL rated for up to 30 amps at 600 VAC.

8. Low current terminal blocks shall accept wires from 24 to 10 AWG for single conductor per termination.

9. Provide Phoenix Contact model UK5N, or approved equal.

O. Grounding Terminal Blocks (407800.T60).

1. Grounding terminal blocks shall be provided as shown on the Drawings and in all panels requiring field terminations.

2. Grounding terminal blocks shall be used for electrical circuits rated at or less than 30 amps.

3. Grounding terminal blocks shall mount on DIN rail.

4. Grounding terminal blocks shall be UL rated for a maximum of 30 amps and 600 VAC and to accept wires from 26 to 10 AWG for single conductor per termination.

5. Grounding terminal blocks shall be supplied with all required accessories including end covers, fixed bridge bars, partition plates and end brackets.

6. Low current terminal blocks shall be supplied with machine printed terminal block and terminal strip identification numbers that match the approved submittals.

7. Grounding terminal blocks shall be green / yellow in color.

8. Provide Phoenix Contact model USLKG5, or approved equal.

P. Fusible DC Terminal Blocks (407800.T30).

1. Fusible DC terminal blocks shall be provided for 24 VDC control circuits as shown on the Drawings.
2. Fusible DC terminal blocks shall be rated for use in electrical control circuits rated 6.3 amps or less and 15-30 VAC/DC.
3. Fusible DC terminal blocks shall mount on DIN rail.
4. Fusible DC terminal blocks shall accept 5 mm by 20, 25 or 30 mm fuses and use LED type blown fuse indicators.
5. Fusible DC terminal blocks shall be supplied with all required accessories including end covers, fixed bridge bars, partition plates and end brackets.
6. Fusible DC terminal blocks shall be supplied with machine printed terminal block and terminal strip identification numbers that match the approved submittals.
7. Fusible DC terminal blocks shall be black in color.
8. Provide Phoenix Contact model UK5 HESILED 24, or approved equal.

Q. Fusible AC Terminal Blocks (407800.T35).

1. Fusible AC terminal blocks shall be provided for 120 VAC control circuits as shown on the Drawings.
2. Fusible AC terminal blocks shall be rated for use in electrical control circuits rated 6.3 amps or less and 110-250 VAC/DC.
3. Fusible AC terminal blocks shall mount on DIN rail.
4. Fusible terminal blocks shall accept 5 mm by 20, 25 or 30 mm fuses and use neon blown fuse indicators.
5. Fusible AC terminal blocks shall be supplied with all required accessories including end covers, fixed bridge bars, partition plates and end brackets.
6. Fusible AC terminal blocks shall be supplied with machine printed terminal block and terminal strip identification numbers that match the approved submittals.
7. Fusible AC terminal blocks shall be black in color.
8. Provide Phoenix Contact model UK5 HESILA 250, or approved equal.

R. Wire Identification Labels (407800.L02).

1. Wire identification labels shall be provided for all conductors within control panels and control centers.
2. Wire identification labels shall be machine printed, non-adhesive, wire marker heat shrink sleeves with identification numbers that match the approved submittals.
3. Wire identification labels shall be properly sized for the conductor or cable and shall be white with black characters.

4. Provide Brady, Panduit, or approved equal.

S. Narrow Slot Wire Ducts (Narrow Slot) (407800.W21).

1. Wire ducts shall be provided as shown on the Drawings.
2. Wire ducts shall be large enough to provide a wire fill area no more than 40 percent of the total cross sectional area of the wire ducts.
3. Wire ducts shall be attached to the back panel with screws or plastic fasteners that are approved for use with, and provided by the wire duct manufacturer.
4. Wire ducts shall not be attached to back panel or enclosure side surfaces with glue, tape, or other such adhesives.
5. Wire ducts shall be white in color.
6. Wire ducts shall have slotted sides.
7. Wire ducts shall be provided with removable covers.
8. Provide Panduit Type F, Thomas & Betts Type NPW, or approved equal.

T. Noise Shield (407800.N20).

1. Noise shields shall be provided as shown on the Drawings.
2. Noise shields shall be designed to provide up to 20 dB reduction in noise, equivalent to six-inch air spacing.
3. Noise shields shall be provided with bonding clips to allow mounting inside wire ducts.
4. Noise shield height shall match the wire duct height.
5. Noise shields shall be perforated and pre-scored.
6. Noise shields shall include vertical wall slots and horizontal cable tie slots.
7. Noise shields shall be zinc plated on all horizontal (contact) surfaces and black powder coated on all vertical surfaces.
8. Noise shields shall be attached to the backpanel with screws or plastic fasteners that are approved for the use and provided by the wire duct manufacturer.
9. Provide Panduit model SD(_)EMI, or approved equal.

U. Spiral Wrap (407800.W30).

1. Spiral wrap shall be provided as shown on the Drawings and for all conductor and cable wire assemblies that cross hinged connections.
2. Spiral wrap shall be sized per the manufacturer's instructions.
3. Spiral wrapped assemblies shall include a strain relieving loop at each hinge crossing, with a minimum 6 inch vertical height, to minimize flexing of the wires in the conductor and cable assemblies.
4. Provide Panduit, Thomas & Betts, or approved equal.

V. Cable Ties (407800.W40).

1. Cable Ties shall be provided as required for organizing and arranging conductors within boxes, control panels, and control centers.
2. Cable ties shall be UV resistant.
3. Cable ties shall be black in color.
4. Cable ties shall be installed using a tool from the cable tie manufacturer and specifically intended for use with the cable ties provided.
5. Provide Panduit, Thomas & Betts, or approved equal.

W. DIN Mounting Rail (407800.D10).

1. DIN Mounting Rail shall be provided as shown on the Drawings and in all panels requiring DIN mounting rail.
2. DIN mounting rails shall be made of steel, galvanized, and yellow chromated.
3. Provide Phoenix Contact model NS 35/7.5, Allen-Bradley model 199-DR1, or approved equal.

X. Ground Bars (407800.G06).

1. Ground bars shall be provided as shown on the Drawings.
2. Ground bars shall be low profile, “bus” type with set screw or pressure type connections and all copper construction.
3. Ground bars shall include sufficient termination points to accommodate all equipment grounding conductors as shown on the Drawings.
4. Ground bars shall include spare termination points to accommodate twenty (20) additional conductors sized, #14 through #8 AWG.
5. Provide Cutler-Hammer model GBK21, GE model TGK42, Square D model PK27GTA, or approved equal.

Y. Heavy Duty End Bracket (407800.A61).

1. Provide heavy duty end brackets on DIN rails as indicated on the Drawings.
2. Heavy duty end brackets shall be suitable for 35 mm DIN rails.
3. End brackets shall be screw-on style.
4. Provide Phoenix E/AL-NS 35 series or approved equal.

Z. Intrinsically Safe Relay (407800.R90).

1. Intrinsically safe relay shall be a signal conditioner used for transfer of binary switching signals from a hazardous area.
2. The input circuit shall be monitored for line faults (breakage and short circuit (LFD)).
3. Errors on the intrinsically safe relay shall be indicated by a red flashing LED and the output shall switch to a high-impedance state.
4. Intrinsically safe relay shall be single (1) channel.
5. Provide Phoenix, PR Electronics, Allen Bradley, or approved equal.

AA. Intrinsically Safe HART Barrier (407800.B90).

1. Intrinsically safe HART barrier shall be a repeater power supply and input isolating amplifier. The repeater power supply and input signal conditioner shall be designed for the intrinsically safe and electrically isolated operation of measuring transducers and mA current sources installed in the hazardous areas.

2. Intrinsically safe barrier shall be capable of supplying power to 2-wire transducers.

3. Intrinsically safe barrier shall be capable of operating and measuring 4-wire transducers via a non-powered input.

4. The analog measured value on the intrinsically safe or non-intrinsically safe side shall be capable of overlaying a digital (HART) communication signal and transmit bidirectionally.

5. Intrinsically safe HART Barrier shall be single (1) channel.

6. Provide Phoenix, PR Electronics, Allen Bradley, or approved equal.

BB. Category 6 Ethernet Patch Cable (407800.C90).

1. Category 6 Ethernet patch cable shall be provided for all Ethernet/IP networked devices.

2. Category 6 Ethernet patch cable shall be suitable for use as Industrial Ethernet Cable, 100BaseTX.

3. Category 6 Ethernet patch cable shall be rated for use in a temperature range between -10 degrees C and 60 degrees C.

4. Category 6 Ethernet patch cable shall be rated for outdoor use.

5. Category 6 Ethernet patch cable shall be rated for 300 volts maximum.

6. Category 6 Ethernet patch cable conductors shall be 4-pair, solid copper, 24 AWG.

7. Category Ethernet patch cable conductor pairs shall be bonded.

8. Category 6 Ethernet patch cable insulation material shall be Polyolefin.

9. Category 6 Ethernet patch cable insulation color shall be blue.

10. Category 6 Ethernet patch cable shall be provided with aluminum foil polyester tape shield with 100% insulation coverage.

11. Category 6 Ethernet patch cable outer jacket material shall be PVC. Jacket material shall be sunlight and oil resistant. Jacket shall have sequential markings at two foot intervals.

12. Category 6 Ethernet patch cable shall be provided with RJ45 plugs, suitable for IP20 applications.

13. Category Ethernet patch cable shall be Belden Data Tuff Industrial Ethernet Cord Set E505 Series, or approved equal.

PART 3 - EXECUTION

3.01 INSTALLERS

A. All identification labeling shall be in compliance with Section 26 05 53 Identification For Electrical Systems.

B. CONTRACTOR shall install and connect junction boxes and control panels and to field devices as shown on the Drawings.

C. For all conductors terminating on terminal strips, install crimp-on, insulated plastic sleeve ferrules on each wire. Install ferrules with a crimping tool provided by the ferrule manufacturer for that purpose.

D. Individual conductors and cables shall be grouped together and routed through plastic wire ducts mounted on the backpanel surface.

E. Bond each enclosure back-panel to the grounding electrode system with a # 8 AWG copper conductor.

F. Where conductors and cables are routed in boxes or enclosures, they shall be neatly bundled with cable ties at intervals not to exceed 12 inches on center. The tension for the cable ties shall be set with a tool specifically made for this purpose and of the same manufacturer as the cable tie. Side cutters or other type tools shall not be used to cut the tail end of the cable tie. The CONTRACTOR shall only use the tool specifically made for this purpose and designed for use with the cable ties provided.

3.02 SOURCE QUALITY CONTROL

A. Tests and Inspections

1. CONTRACTOR shall notify the ENGINEER 14 days prior to commencement of shop testing. All equipment shall be tested prior to site delivery.

2. CONTRACTOR-developed test forms shall accompany the notification of testing.

a. Test forms shall list all field connections at terminal strips and all internal logic circuits, along with the method planned for simulation of field conditions to test these connections and circuits.

3. All analog instrument loops shall be tested using an analog signal generator by applying the appropriate control signal to the field termination terminal strip.

a. At a minimum, analog instrument tests shall be made at 0%, 25%, 50%, 75%, and 100% of maximum control signal.

b. Additional analog instrument tests shall be made as appropriate.

4. All digital control circuits shall be tested by: applying the appropriate control voltage to the field termination terminal strip when externally supplied; using a jumper at the field termination terminal strip when internally supplied; or, if applicable, at an internal panel connection point when field terminations are not used.

B. Verification of Performance

1. Device functions shall be observed by the ENGINEER, to determine satisfactory operation of the device and connected circuit continuity, prior to shipment.

3.03 FIELD QUALITY CONTROL

A. Site Tests, Inspection

1. CONTRACTOR shall install, calibrate and test, all systems prior to notifying ENGINEER of witness testing verification.

2. The ENGINEER shall utilize the Process Control Test Certification included in Section 26 01 06 Starting and Adjusting to systematically verify the process control system is operating as designed. The CONTRACTOR shall perform the tasks necessary to confirm proper operation to the ENGINEER.

END OF SECTION

(THIS PAGE LEFT BLANK INTENTIONALLY)

SECTION 40 78 15

PUMP DISCONNECT PANELS

PART 1 - GENERAL

1.01 SUMMARY

A. Section Includes

1. Requirements pertaining to the construction and installation of the Pump Disconnect Panels.

1.02 REFERENCES

A. The following is a list of standards which may be referenced in this section:

1. National Electrical Contractors Association (NECA)
2. National Electrical Installation Standard (NEIS)
   a. 5055, Standard of Installation
3. National Fire Protection Association (NFPA)
   a. 70, National Electrical Code (NEC)
   b. 79, Electrical Standard for Industrial Machinery
4. Underwriters Laboratories, Inc. (UL)
   a. 3121-1, Standard for Safety for Process Control Equipment
   b. 508, Industrial Control Equipment
   c. 698A, Standard for Industrial Control Panels Relating to Hazardous (Classified) Locations
5. National Electrical Manufacturer's Association (NEMA)
   a. 250, Enclosures for Electrical Equipment
   b. ICS 1-2000, Industrial Control and Systems General Requirements

1.03 SUBMITTALS

A. Submit all the product data in Division 40 at the same time. Piecemeal submittals will be rejected as incomplete.

B. Submittal Format:

1. The product data shall be provided as individual PDFs for each Section, unless otherwise noted for specific items. Each PDF shall be numbered to match the specification Section numbers. Submittals not itemized and labeled as specified will be rejected as incomplete.
2. A submittal is required for each product specified. Each individual product submittal shall have the corresponding Reference Keynote Number (example - 260000.A01) typewritten in the upper right hand corner of the submittal. The submittals within each Section tab shall be in the same sequential order as they

are listed in the specification Section. Submittals not containing the Reference Keynote Number will be rejected as incomplete.

3. No typical submittals will be accepted. Each submittal shall be project specific and clearly identify specifically which components or parts are being submitted for approval. Any product submittals, such as a catalog sheet, which do not clearly identify which components or parts are being submitted for approval, will be rejected as incomplete.

4. Submittals in PDF shall include an index, table of contents, or bookmarks with hyperlinks to the associated page of all submitted items. Index shall include each product specified with their corresponding Reference Keynote Number. Electronic submittals not containing a linked index, table of contents, or bookmarks will be rejected as incomplete.

C. Refer to Section 26 05 00 – Common Work Results for Electrical Submittals for additional requirements.

D. Product Data

1. Pursuant to Section 01 33 00 – Submittals.

2. Manufacturer's data including materials of construction, methods of installation and related information for each item specified in PART 2 PRODUCTS.

E. Shop Drawings

1. Dimensional drawings showing the overall length, width, and height of the assembled control panel. Included on these drawings shall be the back panel layout of installed control devices showing part numbers, dimensions, nameplate text, and other details required for a complete assembly. The CONTRACTOR shall obtain the Drawings for the control panel layout and schematic from the ENGINEER. The CONTRACTOR shall modify the Drawings as required for submittal and for as-built documentation. The CONTRACTOR shall not generate their own drawings.

2. For large control panel, physical properties, handling, mounting, shipping break point locations shall be shown in submittal drawings. This shall include total weight, lifting instructions, height, and floor space required.

3. Provide electrical schematic drawings that include: wiring details such as internal and field connection terminal block numbers; shielded wire termination requirements; grounding requirements; and wire colors. Show all required internal and external interlocking. Each drawing shall be circuit specific for the system submitted. No typical schematic drawings shall be submitted.

4. Drawings shall list the equipment number of the box, control panel, or center submitted.

5. Component designations shall match those shown on the Drawings.

6. Complete bills of materials shall be included with submittal.

1.04 QUALITY ASSURANCE

A. Qualifications

1. Equipment provided as part of this section shall be manufactured by a single licensed firm, regularly engaged in the design and manufacture of such equipment for a minimum of five years. The control panels shall have a UL508A listing. Components within control panels shall be listed in a manner consistent with UL508A requirements.

1.05 MAINTENANCE

A. Manufacturer shall provide and list in the bill of materials the following spare parts.

1. One each of all power and control fuses provided in the assembled control panel/ center.

B. Provide Operation and Maintenance Data and Manuals Pursuant to the Contract Documents.

PART 2 - PRODUCTS

2.01 COMPONENTS

A. Disconnect Panel (477815.E01)

1. Provide all electrical and control components within the Pump Control Panel as shown on the Drawings and in Section 40 78 00 Panel Mounted Equipment.

B. Meltric Cord and Plug Assembly (407815.R01).

1. Provide a cord and plug assembly for each pump cord.

2. IP67.

3. Shall be horsepower rated per UL 1682, 98 and 508A and NEC 430.

4. Shall perform as a true functioning disconnect switch for motor and inductive loads without the need for an electrical or mechanical interlock.

5. Shall make or break up to 1000 VAC and up to one and a half times the rated current of the assembly.

6. Dead front construction to prevent user access to live parts.

7. Silver-nickel (85/15) butt-style spring loaded contacts.

8. Provide pilot contacts as required for motor over-temperature sensors, moisture leak sensors, and other control features required by the Pump Supplier.

C. Disconnect Stand (407815.S01).

1. A lockable pump disconnect panel stand shall be provided as shown on the drawings. The disconnect panel stand shall be constructed of 304 stainless steel.

2. The disconnect panel stand shall be the same width and depth as the disconnect panel. The bottom of the disconnect panel shall be mounted a minimum of 48 inches above the bottom of the Influent Pump Station and surrounding grade. The disconnect panel stand shall extend from the bottom of the disconnect panel

to the finish grade adjacent to the Influent Pump Station structural slab. The entire front panel of the stand shall be a lockable, hinged door capable of opening 180 degrees, and shall not result in any gaps when the door is closed. The door shall include a padlock hasp.

3. The stand frame shall be constructed using stainless steel tube, angle, or bars. The sides of the stand and the door shall be enclosed with stainless steel expanded mesh or perforated sheets.

PART 3 - - EXECUTION

3.01 INSTALLATION

A. All identification labeling shall be in compliance with Section 26 05 53 – Identification for Electrical Systems.

B. Panels, panel-mounted equipment and listed accessories shall be pre-assembled at the control supplier's factory. No work, other than correction of minor defects or minor transit damage, shall be done to the panels at the job site without written consent by the Owner.

C. Prior to installation of panels that contain both power and control/signal wiring, verify that any installed conduits are properly located to allow wiring to be installed inside the panels to avoid interference between power and control/signal wiring.

D. Install equipment and materials in a neat and workmanlike manner and align, level and adjust for satisfactory operation. Install equipment so that all parts are easily accessible for inspection, operation, maintenance, and repair. Any conflicts with other existing equipment shall be brought to the attention of the Owner's before any modifications are made.

E. For all conductors terminating on terminal strips, install crimp-on, insulated plastic sleeve ferrules on each wire. Install ferrules with a crimping tool provided by the ferrule manufacturer for that purpose.

F. Individual conductors and cables shall be grouped together and routed through plastic wire ducts mounted on the backpanel surface.

G. Bond each enclosure back-panel to the grounding electrode system with a # 8 AWG copper conductor.

H. Where conductors and cables are routed in boxes or enclosures, they shall be neatly bundled with cable ties at intervals not to exceed 12 inches on center. The tension for the cable ties shall be set with a tool specifically made for this purpose and of the same manufacturer as the cable tie. Side cutters or other type tools shall not be used to cut the tail end of the cable tie. The CONTRACTOR shall only use the tool specifically made for this purpose and designed for use with the cable ties provided.

3.02 SENSOR AND INSTRUMENTATION INSTALLATION

A. Level probes, float switches and transducers shall be mounted on cable hanger at levels shown and demonstrate proper operation.

B. Provide all sensors, switches, and transducers with excess cable to allow the probes to be lowered to the bottom of the wetwell as required to test probe operation by manually lowering to the water level.

3.03 CABLE INSTALLATION

A. Excess cable shall be neatly coiled and hung in the wetwell in a manner so as not to interfere with pump removal or access to the pump removal lifting chain.

B. Excess cable coils shall be secured with plastic ties, and hung as high in the wetwell as feasible. Excess cable shall not be stored or coiled inside the disconnect panel stand.

3.04 SOURCE QUALITY CONTROL

A. Tests and Inspections

1. CONTRACTOR shall notify the ENGINEER 14 days prior to commencement of shop testing. All equipment shall be tested prior to site delivery.

2. CONTRACTOR-developed test forms shall accompany the notification of testing.

a. Test forms shall list all field connections at terminal strips and all internal logic circuits, along with the method planned for simulation of field conditions to test these connections and circuits.

3. All analog instrument loops shall be tested using an analog signal generator by applying the appropriate control signal to the field termination terminal strip.

a. At a minimum, analog instrument tests shall be made at 0%, 25%, 50%, 75%, and 100% of maximum control signal.

b. Additional analog instrument tests shall be made as appropriate.

4. All digital control circuits shall be tested by: applying the appropriate control voltage to the field termination terminal strip when externally supplied; using a jumper at the field termination terminal strip when internally supplied; or, if applicable, at an internal panel connection point when field terminations are not used.

B. Verification of Performance

1. Device functions shall be observed by the ENGINEER, to determine satisfactory operation of the device and connected circuit continuity, prior to shipment.

3.05 FIELD QUALITY CONTROL

A. Site Tests, Inspection

1. CONTRACTOR shall install, calibrate and test, all systems prior to notifying ENGINEER of witness testing verification.

2. The ENGINEER shall utilize the Process Control Test Certification included in Section 26 01 06 – Starting and Adjusting to systematically verify the process control system is operating as designed. The CONTRACTOR shall perform the tasks necessary to confirm proper operation to the ENGINEER.

END OF SECTION

(THIS PAGE LEFT BLANK INTENTIONALLY)

SECTION 40 80 00

COMMISSIONING OF PROCESS SYSTEMS

PART 1 - GENERAL

1.01 SUMMARY

A. Section Includes

1. The section includes the requirements pertaining to the checkout, calibration, and testing of the instrumentation provided as part of this project.

1.02 SYSTEM START UP, COMMISSIONING, AND OWNER'S TRAINING

A. General

1. CONTRACTOR shall provide the OWNER with a written notice a minimum of four calendar days prior to system start-up. The project schedule shall not be sufficient notice.

B. Checkout

1. After installation and connection work has been completed, CONTRACTOR shall verify the equipment is properly installed.

2. CONTRACTOR to verify the following

a. Polarity of electric power and signal connections.

b. Correct applied voltages to all equipment.

c. Required grounds are properly connected.

d. The integrity of all connections.

3. CONTRACTOR shall certify in writing each loop or system has been verified for proper installation.

C. Calibration

1. CONTRACTOR shall provide labor, tools, and equipment to calibrate each instrument in accordance with the manufacturer's specifications and instructions.

2. Analog instruments shall be calibrated and tested in place without removal.

3. Test equipment and instruments used to simulate inputs and read outputs shall be suitable for the purpose intended and shall be calibrated to accuracy greater than the required accuracy of the instrument being calibrated. Test equipment shall have accuracy traceable to the National Bureau of Standards.

D. Analog Loop Tests

1. CONTRACTOR shall provide labor, tools, and equipment to field test, inspect and adjust each instrument installed under this contract to its specified performance requirement in accordance with manufacturer's specifications and instructions.

2. Instruments provided by CONTRACTOR which fails to meet any contract requirement or any published manufacturer performance specification for

functional and operational parameters not specified in the contract, shall be repaired or replaced, at no cost to OWNER.

3. Each element of the analog loop shall be tested and exercised by the CONTRACTOR to demonstrate proper operation, first individually and then as a complete loop.

4. Each analog loop shall be tested to verify proper performance within specified accuracy tolerances.

E. System Testing

1. The CONTRACTOR shall notify the ENGINEER a minimum of 14 days in advance of the scheduled system testing.

2. System testing shall not commence until after approved acceptance of all wire, calibration, and loop tests.

3. All systems shall be tested prior to the beginning of plant operational testing.

4. Completion of system testing activities shall be documented by a certified report, including all test forms, with test data entered, furnished to ENGINEER.

5. System testing shall at a minimum demonstrate the following:

   a. Each component of the system operates properly with all other components of the system.

   b. Analog control loops operate in a stable manner.

   c. Interlocks perform properly.

   d. Control sequences perform properly.

6. System testing activities shall include the use of water to establish service conditions simulating normal final control element operating conditions in terms of applied process loads, operating ranges and environmental conditions.

7. Final control elements, control panels and supplementary equipment shall be tested under start up and steady state operating conditions to verify proper and stable control is achieved using all control center and field mounted control circuits associated with each system.

8. Hardwired and software control circuit interlocks and alarms shall be operational.

9. Control of final control elements and supplementary equipment shall be tested using both manual and automatic control circuits.

10. Stable steady state operation of final control elements running under the control of field mounted automatic analog controllers or software based controllers shall be assured by adjusting the controllers, to eliminate oscillatory final control element operation.

11. CONTRACTOR shall submit to ENGINEER a copy of completed test reports specified in this Section and Section 26 01 08 - Electrical Testing.

F. System Start Up

1. After system Calibration and Testing verification is complete, CONTRACTOR shall inform the ENGINEER in writing that the station controls are installed according to the Drawings and that the station is ready for Start Up.

2. When Start Up begins, the CONTRACTOR shall have his technicians available on site at all times during testing to aid the ENGINEER.

3. After ENGINEER has verified all installed control systems are operating properly, commissioning may commence.

G. Commissioning

1. CONTRACTOR shall then perform Commissioning as follows:

a. Operating the station for 14 consecutive days without a significant interruption with the exception of any interruption caused by training conducted during this time period.

b. The station shall be operated in every designed control mode including the operation of all equipment.

2. Should a significant interruption occur the fault causing the interruption shall be corrected by the CONTRACTOR and the Commissioning period of 14 consecutive days shall be restarted.

H. OWNER's Training

1. Coordinate with OWNER.

PART 2 - PRODUCTS – NOT USED.

PART 3 - EXECUTION – NOT USED.

END OF SECTION

(THIS PAGE LEFT BLANK INTENTIONALLY)

SECTION 40 80 01

TESTING GRAVITY FLOW PIPELINES

PART 1 - GENERAL

1.01 SECTION INCLUDES

A. Acceptance testing of gravity flow, sanitary sewer, storm drain pipelines, including:

1. Visual inspection of pipes.
2. Leakage testing of pipes.
3. Leakage testing of manholes.

1.02 REFERENCED SECTIONS

A. The following Section is referenced in this Section

1. Section 01 33 00 – Submittals

1.03 PERFORMANCE REQUIREMENTS

A. Perform leakage testing to verify compliance with the maximum allowable leakage criteria specified in this Section. Refer to tables in this Section for leakage criteria.

B. Repair or replace sections of pipelines and manholes that fail to meet the specified requirements and retest until the leakage criteria is satisfied.

1.04 SUBMITTALS

A. Comply with Section 01 33 00.

B. Before testing begins and in adequate time to obtain approval through the submittal process, prepare and submit a test plan for review by the Engineer. Include testing procedures, methods, equipment, and tentative schedule.

C. Submit test reports for each test on each segment of pipeline.

1.05 SEQUENCE AND SCHEDULING

A. Perform testing after placing and compacting Bedding Material around the pipe, or after backfilling the pipe trench, at Contractor's option. Schedule testing so that no more than 1,000 lineal feet of installed gravity flow piping remains untested at any one time.

B. Coordinate testing schedules with Owner. Perform testing under observation of Owner.

PART 2 - NOT USED

PART 3 - EXECUTION

3.01 PREPARATION

A. Provide labor, equipment, tools, test plugs, risers, air compressor, air hose, pressure gauges and other devices necessary for proper testing and inspection of pipelines.

B. Test pressures shall account for ground water elevation.

3.02 TESTING LINE AND GRADE

A. Confirm pipe alignment visually by flashing a light between manholes. Verify if alignment is true and no pipes are misplaced. In case of misalignment or damaged pipe, remove and re-lay or replace pipe segment.

3.03 LEAKAGE TESTING

A. Test Options:

1. Test gravity flow, sanitary sewer sanitary sewer and storm drain pipes and manholes for leakage.

a. Gravity flow pipelines 24-inches in diameter and smaller may be tested by either hydrostatic means or by low pressure air testing.

b. Test gravity flow pipelines larger than 24-inches in diameter by hydrostatic means, low pressure air testing or joint testing.

B. Compensating for Ground Water Pressure:

1. When Contractor elects to test pipe after backfilling the pipe trench, groundwater pressure must be taken into account to eliminate influence on the leakage test.

2. Determine groundwater elevation as follows:

a. Install a 1/2-inch diameter pipe nipple, approximately 10” long, through the wall of each manhole. Cap the end of the pipe nipple that protrudes into the manhole. Locate pipe nipple at the crown of the new gravity pipeline where the pipeline enters the manhole. Install pipe nipple at the same time the gravity pipeline is constructed.

b. Before performing pipeline leakage acceptance test, remove the cap from the pipe nipple and clear the pipe nipple with air pressure. Connect a clear plastic tube to the nipple, run the tube vertically inside the manhole and allow groundwater to rise in the tube.

c. After groundwater stops rising, measure the height in feet of water over invert of the pipe.

3.04 HYDROSTATIC LEAKAGE TESTS

A. Determine groundwater elevation.

B. Plug wyes, tees, stubouts, laterals and other connections to the sewer. Plug sewer pipeline in the downstream manhole. If necessary to isolate flow, plug incoming pipes in the upstream manhole.

C. When test pressures require installation of a riser pipe, connect riser pipe to pipe in the upstream manhole.

D. Fill sewer pipe and manholes with water to the specified test elevation, compensating for the measured groundwater elevation.

3.05 LOW PRESSURE AIR TESTING

A. Conduct air pressure testing in accordance with ASTM C924.

B. When low pressure air testing is used to test concrete pipes, a wetted pipe interior is recommended.

C. Pressurize the pipe section to be tested to 4.0 pounds per square inch and hold this pressure for 5 minutes. After this time period, allow pressure to drop.

D. When internal air pressure reaches 3.5 pounds per square inch, begin measuring rate of air pressure loss. Record the time interval required for the internal air pressure to drop from 3.5 psi to 2.5 psi.

E. Acceptance Criteria: The pipeline under test is acceptable when the time interval so recorded exceeds the minimum test time given by the following table:

MINIMUM Time Allowed for Pressure Loss from 3.5 psig to 2.5 psig:	
Nominal Pipe Diameter, Inches	Minimum Time Allowed per 100 Lineal Feet of Pipe Under Test, Minutes
6	0.7
8	1.2
10	1.5
12	1.8
15	2.1
18	2.4
21	3.0
24	3.8

F. Any section of pipe which fails to meet requirements shall be repaired and retested.

3.06 LEAKAGE TESTING FOR MANHOLES

A. After completion of manhole construction, wall sealing, or rehabilitation, test manholes for water tightness using hydrostatic or vacuum testing procedures.

1. New Manhole Construction: Conduct test prior to backfilling.

B. Plug influent and effluent lines connected to manhole with suitably-sized pneumatic or mechanical plugs.

1. Utilize plugs that are properly rated for pressures required for test.

2. Place plugs a minimum of 6 inches outside of manhole walls.

3. When pipes connected to the manhole have not been backfilled, brace pipes to prevent dislodging from the manhole.

C. Vacuum Testing:

1. Install vacuum tester head assembly at top access point of manhole and adjust for proper seal on straight top section of manhole structure. Following manufacturer's instructions and safety precautions, inflate sealing element to the recommended maximum inflation pressure; do not over-inflate.

2. Evacuate manhole with vacuum pump to 10” mercury (Hg), disconnect pump, and monitor vacuum for the time period specified in the following table.

Depth in Feet	Time in Seconds by Manhole Diameter		
	48”	60”	72”
4	10	13	16
8	20	36	32
12	30	39	48
16	40	52	64
20	50	65	80
24	60	78	96
[a]	5	6.5	8.0

[a] Add times for each additional 2-feet of manhole depth. (The values listed above have been extrapolated from ASTM C924-85).

3. If the drop in vacuum exceeds 1” Hg over the specified time period tabulated above, locate leaks, complete repairs necessary to seal manhole and repeat test procedure until satisfactory results are obtained.

D. Hydrostatic testing:

1. Fill manhole with water to top of frame. Add water over a 24-hour period to compensate for absorption and evaporation losses. After 24 hours, refill to top of frame and observe for loss of water. If, after a 4-hour period the water level is reduced by more than 1/4”, the leakage shall be considered excessive. Contractor shall make necessary repairs and retest the manhole.

2. If water loss exceeds amount tabulated above, locate leaks, complete repairs necessary to seal manhole and repeat test produce until satisfactory results are obtained.

END OF SECTION

SECTION 40 80 02

TESTING PRESSURE PIPING

PART 1 - GENERAL

1.01 SECTION INCLUDES

A. Hydrostatic pressure pipeline testing.

1.02 REFERENCED SECTIONS

A. The following Sections are referenced in this Section:

1. Section 01 33 00 – Submittals
2. Section 01 52 00 – Construction Facilities and Utilities
3. Section 01 99 00 – Reference Forms
4. Section 40 05 10 – Piping Systems

1.03 SUBMITTALS

A. Provide Submittal per Section 01 33 00.

B. Testing Schedule and Notification of Testing: Submit advance written notice of testing activities a minimum of 48 hours prior to conducting piping tests.

C. Testing Plan: Submit a written plan that identifies the methods for water procurement, conveyance and disposal.

D. Completed Pipe Test Record Forms, found in Section 01 99 00.

1.04 TESTING REQUIREMENTS

A. Furnish personnel, materials, bulkheads, test plugs, restraints, anchors, temporary connections, pumps, pressure gauges and other equipment needed to perform testing.

B. Water for Testing

1. Use potable water for pressure testing pipelines. Obtain water from the source identified in Section 01 52 00.
2. Disposal:
   a. Obtain approvals from the Oregon Department of Environmental Quality and other regulatory agencies to dispose of water in existing drainage ditches and other surface water features. Pay all costs to convey or transport water to the point of disposal.
   b. Dispose of water used for testing pipelines in the sewer collection system or per Paragraph 1.04.B.2.a above.

C. Test only those portions of the pipe that have been installed as part of this Contract.

1. Test new pipe sections prior to making final connection to existing piping.
2. Install test plugs or bulkheads to isolate new piping systems.

3. Unless otherwise indicated, valves may not be used to isolate portions of the piping system for purposes of testing. When testing against a valve is indicated or approved by the Owner, provide a test plate “pancake” to further isolate the new and existing piping.

D. Sequence

1. Buried Pressure Piping: Except as otherwise indicated, conduct piping pressure test after trench has been backfilled to subgrade and compacted. Piping may be tested before or after final paving, at Contractor’s option.

2. Encased Piping: Test before encasing pipe in concrete.

E. Failed Tests: Make necessary corrections or remove defective pipe or defective appurtenances. Repeat pressure test until a successful test is achieved.

PART 2 - PRODUCTS (NOT USED)

PART 3 - EXECUTION

3.01 GENERAL

A. Test pipelines, appurtenances, valves, and fittings in the pipeline system.

B. Where allowable leakage rates are not specifically indicated, no leakage is allowed.

C. Perform testing operations in the presence of the Engineer.

D. Prior to pressure testing, clean pipeline of debris, construction materials, dirt and other foreign material within the piping system.

E. Do not test pipelines until thrust restraint devices have been installed. Where concrete thrust blocks are used, do not begin pressure test until concrete has attained an age of at least 7 days unless otherwise approved by the Owner. Pressure test buried pipe after backfill.

F. After testing has been completed, drain test water from pipelines and leave in clean condition.

3.02 FILLING PIPING SYSTEMS WITH WATER

A. Place temporary bulkheads in the pipe at the ends of the test section, and then slowly fill the pipeline with water at a rate which does not cause surges or exceed the rate at which the air can be released through the air valves.

B. Ascertain that test bulkheads are suitably restrained to resist the thrust of the test pressure without damage to, or movement of, the adjacent pipe.

C. Purge air within the pipeline during the filling operation. Check proper operation of air release valves and air vents during the filling operation to ascertain proper operation and venting of air from the pipeline.

D. Concrete pipe, cement-mortar lined pipe and other pipe made from water absorbing material:

1. After the filling operation is complete, allow the filled pipeline to stand under a slight pressure for at least 24 hours to allow air to escape from any air pockets within the pipeline and the pipe lining to absorb water.

2. Examine bulkheads, valves and connections for leaks during this period. If leaks are found, make corrections before conducting the pressure test.

3.03 PRESSURE TESTING EXPOSED PIPING

A. Test exposed piping as follows:

1. Fill section of piping under test with water and raise the system pressure to a test pressure of 150 psi.

2. Visually inspect exposed pipe joints, joints at fittings, valves, hydrants, and other piping appurtenances for leaks.

3. Correct leakage as necessary to eliminate the leakage.

4. Duration of Pressure Test: 2 hours.

5. Leakage Allowances: Zero leakage.

6. Correct any visible leakage by tightening flanges and screwed joints, replacing gaskets or removing defective materials.

7. Repeat test until no leakage is observed.

8. Record results of pressure test on Pipe Test Record form, included in Section 01 99 00.

3.04 PRESSURE TESTING BURIED PIPING NON-HDPE

A. For pressure testing of HDPE pipe, See Paragraph 3.05. For other buried pipe materials, pressure test as follows:

1. Fill section of piping under test with water and raise the system pressure to a test pressure of 150 psi. The test pressure shall not be allowed to drop below 150 psi for the duration of the test. If the test pressure drops below 150 psi at any time, the test will be void.

2. The test pressure shall be calculated for the point of highest elevation of the water line but shall not exceed 200 psi at any point

3. Visually inspect exposed pipe joints, joints at fittings, valves, hydrants, and other piping appurtenances for leaks. The use of bell repair clamps or other similar devices to stop leaks due to defective materials or poor workmanship will not be permitted.

4. Correct visible leaks necessary to eliminate the leakage.

5. Duration of Pressure Test: 2 hours.

6. Leakage Measurement:

a. Begin test once visible leaks have been eliminated.

b. Maintain test pressure during the test period by adding makeup water to a calibrated test reservoir.

c. Accurately measure the volume of makeup water introduced into the pipeline to maintain the test pressure to determine the leakage rate for the test.

7. The pipeline pressure test is successful when the makeup water added during the test is equal to or less than the allowable leakage rate (L) defined below.

8. Gasketed Ductile Iron Pipe (mechanical or push-on joint)

$$L = \frac{SD(P)^{1/2}}{148{,}000}$$

L = Allowable leakage in gallons per hour.

S = Length of the test section in feet.

D = Nominal diameter of the piping in inches.

P = Test pressure in pounds per square inch gauge.

9. Steel Pipe (AWWA C200, Concrete Bar Wrapped Cylinder Pipe (AWWA C303)

a. Gasketed joints:

1) L= 6.25 gallons/inch diameter/mile/24 hours

2) L= allowable makeup water in gallons.

b. Welded joints: No leakage allowed.

c. Where pipeline consists of a combination of welded and gasketed joints, adjust the formula above by the ratio of the joint types over the test section.

10. Polyvinyl Chloride (PCV) pipe:

$$L = \frac{ND(P)^{1/2}}{7{,}400}$$

L = Allowable leakage in gallons per hour.

N = Number of joints in the length of pipeline to be tested.

D = Nominal diameter of the piping in inches.

P = Test pressure in pounds per square inch gauge.

11. Record results of pressure test on Pipe Test Record form, included in Section 01999.

3.05 PRESSURE TESTING HDPE PIPING

A. Pressure test as follows:

1. Tests should be conducted in accordance with Chapter 9 of AWWA M55 and the following:

a. HDPE and DI pipes shall be pressure tested separately before tie-in connections. All tie-in joints between HDPE and DI pipe shall be visually

inspected at working pressure. Leaks at joints shall be repaired and re-inspected. Test all HDPE water mains and appurtenances including HDPE to DI transition fittings under a hydrostatic pressure equal to 150 psi.

b. The Contractor shall schedule pressure testing such that pressure changes due to thermal expansion or contraction of the pipe during the test period is minimized.

c. Fill section of piping under test completely. The test section is usually filled from the lowest point of the pipeline and at a slow fill rate to minimize air entrainment. After filling, allow time for the system to reach thermal equilibrium and allow for any dissolved air to exit the system air vents.

d. Gradually pressurize the test section to 150 psi and add make-up water as necessary to maintain pressure in the pipeline within 5 psi of the test pressure for a period of four (4) hours. During this initial expansion phase, polyethylene pipe will expand slightly due to elasticity and Poisson effects. Additional test liquid will be required to maintain pressure. The amount of additional test liquid will vary because expansion in the PE pipe is not linear.

e. If test pressure cannot be attained, or if it takes an unreasonably long time to reach test pressure, there may be faults such as excessive leakage, entrapped air, or open valving, or the pressurizing equipment may be inadequate for the size of the test section. If such faults exist, discontinue pressurizing and correct them before continuing.

f. Immediately following the initial expansion phase, reduce test pressure by 10 psi and stop adding test liquid. Monitor the pressure for 1 hour.

g. If no visual leakage is observed and test pressure remains steady (within 5% of the target value) for one (1) hour, no leakage is indicated.

h. Under no circumstances should the total time for initial pressurization and time at test pressure exceed eight hours at 1.5 times the system pressure rating. If the test is not complete because of leakage, equipment failure, or any other reason within this total time, the test section should be depressurized and allowed to “relax” for at least eight hours before starting the next testing sequence.

i. Record results of pressure test on Pipe Test Record form, included in Section 01999.

END OF SECTION

(THIS PAGE LEFT BLANK INTENTIONALLY)

SECTION 43 25 02

SUBMERSIBLE WASTEWATER PUMP SOLIDS HANDLING

PART 1 - GENERAL

1.01 SECTION INCLUDES

A. Submersible pumps complete with motor, discharge fitting, guide bar brackets, access frames and covers and accessories suitable for pumping unscreened wastewater at variable speed.

B. Provide heavy-duty, submersible dry-pit centrifugal non-clog type, suitable for pumping fluids containing unscreened wastewater solids.

C. Equipment List

1. Influent Pump Station Pump No. 1: PMP-110-01
2. Influent Pump Station Pump No. 2: PMP-110-02
3. Influent Pump Station Pump No. 3: PMP-110-03
4. Influent Pump Station Pump No. 4: PMP-110-04
5. Influent Pump Station Pump No. 5: PMP-110-05

1.02 REFERENCED SECTIONS

A. The following Sections are referenced in this Section:

1. Section 01 33 00 – Submittals
2. Section 01 45 23 – Testing and Inspection
3. Section 01 61 10 – Seismic Design Requirements
4. Section 01 61 11 – Seismic Anchorage and Bracing
5. Section 01 66 00 – Materials and Equipment
6. Section 01 78 23 – Operation and Maintenance Information
7. Section 01 79 00 – Training
8. Section 01 81 00 – Equipment and System Testing
9. Section 01 82 50 – Facility Start-Up and Commissioning
10. Section 01 99 00 – Reference Forms
11. Section 05 50 01 – Anchor Bolts and Anchoring Devices
12. Section 40 61 96.13 – Process Control Descriptions – Influent Pump Station Pumps

1.03 REFERENCED STANDARDS

A. The following Standards and referenced in this Section. Refer to the latest version of each document:

1. American National Standards Institute

   a. ANSI/Hydraulic Institute

2. American Society for Testing and Materials International

   a. ASTM A48 – Standard Specification for Gray Iron Castings

   b. ASTM A276 – Standard Specifications for Stainless Steel Bars and Shapes

   c. ASTM A479 – Standard Specification for Stainless Steel Bars and Shapes for Use in Boilers and Other Pressure Vessels

   d. ASTM A532 – Standard Specification for Abrasion-Resistant Cast Irons

3. International Organization of Standardization

   a. ISO 1940 – Mechanical Vibration – Balance Quality Requirements of Rigid Rotors

   b. ISO 9001 – Quality Management Systems

4. National Electric Manufacturers Association

   a. NEMA MG-1 – Motors and Generators

5. National Fire Protection Association

   a. NFPA 70 – National Electric Code

6. UL Standards

   a. UL 674 – Electric Motors and Generators for Use in Hazardous (Classified) Locations

1.04 DESIGN REQUIREMENTS

A. Design Criteria

1. Designed for use with self-cleaning trench style wet well.

2. Design for continuous operation under submerged, partially submerged or totally dry condition without damage to the pump and motor. Special attention shall be devoted to the shaft design to limit the deflection and to integration of the design of rotating components for operation with the boundaries established by the operating conditions specified in this section.

3. Design specifically designed to pump unscreened raw water or wastewater and operate without clogging or fouling caused by material in the pumped fluid at any operating condition within the range of service specified.

4. Design to operate without cavitation over the full range of operating conditions.

5. Design for continuous submergence without loss of watertight integrity to a depth of 65 feet.

6. Design so motor and rotating parts are removable from the motor end of pumps.

7. Provide head/capacity curves which slope continuously with no flat spots or reverse slope.

8. Design to operate without overload on any component at any point along the pump's entire operating curve.

9. Provide capability to operate at shutoff head for durations up to 30 seconds without overloading or damage.

10. Comply with the following:

Parameter	IPS Pumps 1 & 2	IPS Pumps 3-5
Rigid Sphere, inches diameter (minimum), capable of passing through the pump from inlet to discharge[a]	3	
Maximum Hydraulic Efficiency, minimum, percent[b]	70	75
Minimum Nominal Inlet Diameter, inches	6	12
Minimum Nominal Discharge Diameter, inches	6	12
VFD	Yes	Yes
Maximum Nominal Motor Speed, rpm	1800	1200
Motor:		
Horsepower, Maximum	30	75
Voltage/Cycle/Phase	480/60/3	480/60/3
Service Factor	1.15	1.15
Insulation Rating	H	H
Enclosure	FM Explosion Proof	FM Explosion Proof
a. For pumps 10 inches in discharge nozzle diameter and less, this dimension shall be the minimum clearance between the outside diameter of the impeller and the volute cutwater. The sphere shall be a solid sphere, incapable of compression or distortion of any kind. b. Efficiency is the minimum acceptable value at the maximum efficiency point on the pump's efficiency/capacity curve for the selected impeller and is not necessarily to be associated with any specified operating condition.		

B. Performance Criteria

1. Pumps will operate as individual units. See control description Section 40 61 96.13.

2. The fluid to be pumped is anticipated to range between 35ºF and 85ºF. The fluid is unscreened wastewater containing up to 500 mg/L of solids consisting of grit, organic material, small quantities of petroleum products, plastic, and animal fats and greases.

3. Pumps will be operated by a control system in accordance with Section 40 61 96.13.

4. Pumps shall be suitable for long -term operation under a constant or variable speed operation as conditions require under the following conditions:

   a. Ambient Environment: Municipal Wastewater Wet Well Interior

   b. Ambient Temperature: 20-104°F

   c. Altitude: 520 feet

5. Factory Test: Test each pump for performance at the factory to determine head versus capacity at seven different points, efficiencies, and kilowatt draw required for the operating points that are specified. All tests shall be run in accordance with ANSI/HI 11.6. Any deviations shall be subject to review by the Owner. A written report stating the tests have successfully been completed along with the results of the shall be provided as product data. In addition, the following procedures shall be followed:

   a. Impeller, motor rating and electrical connections shall first be checked for compliance with the specifications.

   b. Prior to submergence, the pump shall be run dry to establish correct rotation and mechanical integrity.

   c. The pump shall be run for 30 minutes submerged, with a minimum of 6 feet of water over the top of the motor. Following this warm-up period, the pump shall be subjected to the performance and NPSHR tests according to ANSI/HI 11.6.

   d. After satisfactory completion of the performance and NPSHR tests, the motor shall be subjected to a housing leakage test performed under vacuum in accordance with paragraph 11.6.7.2.2 of ANSI/HI 11.6.

   e. All motor circuits, including thermal and moisture sensors and the moisture sensors in the shaft seal area, shall be subjected to electrical resistance tests to determine functionality. In addition, the motor shall be subjected to a dielectric high potential test in accordance with paragraph 11.6.7.2.5 of ANSI/HI 11.6.

C. Operating Conditions:

1. The operating conditions presented in tabular form below are intended to describe the results of hydraulic calculations developed specifically for the purpose. The calculations were intentionally used to develop the limits of the expected extremes in variation of static head, coefficients for pipeline resistance, and turbulence losses through fittings and valves. Equipment furnished under this section shall be fully suitable for continuous operation at any specified condition or any condition lying between the extremes of the operating conditions specified in the following table. The notes presented at the end of this table are intended to be complimentary to the information presented in the table.

Equipment Numbers	IPS Pumps 1 & 2	IPS Pumps 3-5
Maximum Speed Operation	60 Hz	60 Hz
Condition A[a, d, e] - Dual Pump Operation, Max Speed per Pump		
Capacity, gpm	1000	4300
Total head, feet	50	47
NPSHA, feet	29.5	25.25
Condition B[b, d, e] - Single Pump Operation, Max Speed		
Capacity, gpm	1250	4700
Total head, feet	42.5	40
NPSHA, feet	29.5	25.25
Condition C[c, d, e] - Single Pump Operation, Reduced Speed		
Capacity, gpm	350	2000
Total head, feet	28.5	29
NPSHA, feet	29.5	25.25

a) Condition A shall be taken as the rated operating condition. Performance at the rated condition shall be guaranteed in accordance with tolerances set forth in the Test Standards of the Hydraulic Institute specified herein. Condition A has been selected to obtain the rated pumping capacity for the installation. It is not intended that the pumps be selected for maximum efficiency at Condition A. Pumps furnished under this section should be selected to achieve Condition A performance, but also operate continuously without objectionable vibration or cavitation at the head specified under Condition B. Condition A may be located in the Allowable Operating Region as established by the pump manufacturer in accordance with ANSI HI 9.6.3 and published in the manufacturer's published application data for the specific model proposed in this application. Any increase in head or capacity or both which results in a power requirement greater than the pump motor's nameplate rating will be cause for rejection.

b) Condition B head is presented to indicate operating conditions when the pump is operating at maximum speed. Condition B shall be used for pump selection. Condition B shall be located within the Preferred Operating Region as established by the pump manufacturer in accordance with ANSI/HI 9.6.3 and listed in the manufacturer's published application data for the specific model proposed for this application. Pumps with head-capacity curves steeper than that assumed will produce somewhat less flow at somewhat lower head. The reverse will occur with pumps having a shallower head-capacity curve. Proposed pump selections meeting this discharge head requirement by operating the equipment at less than full speed will be rejected.

c) Condition C is the anticipated continuous duty reduced speed condition. Pumps furnished under this specification shall be capable of sustained (24 hours per day) operation at this condition within the Acceptable Operating Region as established by the pump manufacturer in accordance with ANSI/HI 9.6.3 and published in the manufacturer's published application data for the specific model proposed for this application.

d) Total head in the above tabulation is the algebraic difference between the discharge head and suction head as defined in ANSI/HI 1.1 through 1.6. Net positive suction head available (NPSHA) in the above tabulation is calculated in accordance with ANSI/HI 1.3 for average barometric pressure and maximum temperature conditions. For Pumps 1 & 2, an allowance of two feet has been included for a safety factor and the elevation of the centerline of the impeller is assumed to be 494.23 feet. For Pumps 3-5, and allowance of five feet has been included for a safety factor and the elevation of the centerline of the impeller is assumed to be 495.46ft. For all pumps, another 2 feet was included for the presence of volatile constituents in the pumped fluid. NPSHA at the pump impeller eye can be determined by adjusting the given value by proposed pump dimensions and the indicated requirements for pump installation details. It is the CONTRACTOR's responsibility to make this adjustment and produce calculations justifying the proposed selection. The required NPSHr of the pump shall be less than the NSPHA.

e) Operating Points may be slightly different than listed depending on pump manufacturer.

1.05 SUBMITTALS

A. Comply with Section 01 33 00.

B. Include a copy of the contract document control diagrams and process and instrumentation diagrams, with addenda updates, that apply to the equipment in this section.

1. Mark to show specific changes necessary for the equipment proposed in the submittal.

2. If no changes are required, mark the drawing or drawings “No Changes Required”.

3. Failure to comply with this paragraph is sufficient cause to reject the entire submittal.

C. Include the following:

1. Manufacturer's data including materials of construction and equipment weights.

2. Performance curves developed for the specified operating conditions showing relationship between flow, head, efficiency, speed, and horsepower.

3. Construction details and materials of construction.

4. Fully dimensioned shop drawings.

5. Motor submittal information specified herein, including a completed Motor Data Form (Section 01 99 00).

6. Equipment mounting submittal information

7. Documentation of ISO 9001 compliance.

8. Shaft deflection calculations

9. Documentation and Calculations supporting the design of the motor cooling system.

D. Deferred Submittals:

1. Equipment anchorage design and calculations shall be prepared and signed by a civil or structural engineer currently registered in the state of Oregon as specified in Section 01 61 10 & 01 61 11. The analysis for the anchorage system shall include the affect of differential loads imposed by water in the wet well moving in response to the design seismic event.

2. Submit operating and maintenance (O&M) information as specified in Section 01 78 23 a minimum of 10 days before equipment shipment.

3. Submit factory test reports as specified in Paragraph 2.05 and receive approval prior to equipment shipment. Include factory test results in final O&M manual.

4. Submit forms required following startup and training. Include forms in final O&M manual. Refer to Part 3 below.

E. Vibration

1. The pump, when operating within the manufacturer’s listed Preferred Operating Region (POR) with wet well levels as indicated for normal (not cleaning)

operation, shall comply with the requirements of ISO 1940 Grade G2.5. Vibration at any specified operating condition that is located outside of the manufacturer's listed POR shall not exceed 125 percent of the limiting values in ISO 1940, Grade 2.5.

F. Complete and submit the following forms from Section 01 99 00:

1. Motor Data Form.

2. Unit Responsibility Form.

1.06 QUALITY ASSURANCE

A. Unit Responsibility: Assign unit responsibility to the pump manufacturer for the equipment specified in this section. Submit a Unit Responsibility Certificate (Section 01 99 00).

B. ISO 9001 Quality System

1. Compliance by pump manufacturer is required.

2. Submit documentation of compliance prepared by independent certification agency approved by International Organization for Standardization.

3. Do not ship equipment before compliance documentation review has been completed by Owner.

C. Provide pumps from a single manufacturer.

1.07 PRODUCT DELIVERY, STORAGE, & HANDLING

A. Comply with Section 01 66 00.

1.08 WARRANTY

A. Require the pump manufacturer to warrant the units against defects in materials and workmanship. Provide as a minimum, 100% full payment coverage for parts and labor for thirty six (36) months from date of acceptance by the Owner. Provide 75% payment coverage for parts and labor for thirty seven (37) to forty eight (48) months from date of acceptance by Owner. Provide 50% payment coverage for parts and labor for forty nine (49) to sixty (60) months from date of acceptance by Owner.

PART 2 - PRODUCTS

2.01 MANUFACTURERS

A. Flygt

B. ABS

C. Or equal.

D. Modify equipment as required to meet the requirements of this section.

2.02 MATERIALS

A. Materials are considered the minimum acceptable for the purposes of durability, strength, and resistance to erosion and corrosion. The Contractor may propose alternative materials for the purpose of providing greater strength or to meet required stress limitations. Alternative materials, however, must provide at least the same qualities as those specified for the purpose.

B. Pump Casing: Cast iron, ASTM A48, Class 35B with wetted surfaces coated with Belzona 1321 or equal.

C. Motor Casing: Cast iron, ASTM A48, Class 35B.

D. Discharge Connection Elbow/Fitting: Cast iron, ASTM A48, Class 35B.

E. Impeller:

1. Abrasion-resistant 25% chrome Cast iron, ASTM A532, Alloy IIIA OR

2. Cast iron, ASTM A48, Class 35B with wetted surfaces coated with Belzona 1321or equal.

F. Motor and Pump Shaft: Stainless steel, ASTM A479, Type 431.

G. Wearing Ring/Plate:

1. Abrasion-resistant 25% chrome cast iron, ASTM A532, Alloy IIIA OR

2. Cast iron, ASTM A48, Class 35B with wetted surfaces coated with Belzona 1321or equal.

H. Externals Bolts and Nuts: Stainless steel, ASTM A276, Type 316.

I. Guide Bar Brackets: Stainless steel, ASTM A276, Type 316.

J. Anchor Bolts: Stainless steel, ASTM A276, Type 316.

K. Guide Rails, Lifting Chain and Hook Assemblies: Stainless steel, ASTM A276, Type 316.

2.03 PUMP COMPONENTS

A. General Requirements

1. The pumps shall conform in all respects to the requirements in UL 674.

2. Design so motor and rotating parts are removable from the motor end of pumps.

3. Machine all mating surfaces where watertight sealing is required and fit with nitrile O-rings.

4. Equip pumps with statically balanced non-clog impellers designed to pass coarse solids and stringy materials.

5. Design pumps to automatically connect to the discharge piping when lowered into place on the discharge connections.

a. Make pumps easily removable for inspection or service, requiring no bolts, nuts, or other fastening to be removed for this purpose, and no need for personnel to enter pump well.

b. Seal pump to the discharge connections by a simple linear downward motion of the pump, with the entire weight of the pumping unit guided to and pressing tightly against the discharge connections.

c. Do not permit any portion of the pump to bear directly on the floor of the sump.

d. Do not require rotary motion of the pump for sealing.

e. Provide nonadjustable guide bars, to steer the pump into proper contact with the discharge connection fitting. Do not require guide bars to bear the weight of the pump.

B. Volute/Suction Cover

1. The pump volute shall be a single piece non-concentric design with smooth passages of sufficient size to pass any solids that may enter the impeller.

2. The volute casing shall have a tangential or center discharge nozzle

3. The volute shall be designed for efficient conversion of kinetic to potential energy.

4. The cutwater shall be specifically designed for use in fluids with stringy solids and rags.

5. Specifically designed to bear the load associated with removal and placement of the pump and to withstand the loads imposed by the operations specified.

6. The nozzle flange face shall be designed to mate with the discharge fitting.

7. The volute shall have a replaceable suction cover insert ring in which are cast spiral-shaped, sharp-edged groove(s).

8. A wearing ring shall provide effective sealing between the impeller and the volute housing.

C. Shaft

1. The pump shaft shall be turned, ground and polished, of proportions suitable for use in the specified application.

2. The shaft shall be of sufficient section to limit deflection at the shaft seal to not more than 1.5 mils when the pump is operating at any continuous-duty point defined by the envelope of conditions specified herein.

D. Bearings

1. Support pump shafts on two bearings.

a. Upper bearing: Single row ball bearing.

b. Lower bearing: Two-row angular contact ball bearing.

2. Heavy-duty, oil lubricated or permanently grease lubricated anti-friction type double shielded and factory sealed.

3. Designed for an L-10 rating life of at least 50,000 hours for Pumps 1-2.

4. Designed for an L-10 rating life of at least 100,000 hours for Pumps 3-5

E. Impeller

1. Provide non-clogging design capable of handling solids, fibrous materials, heavy sludge, and other matter found in normal sewage applications.

2. The impeller shall be dynamically balanced, semi-open, multi-vane, back-swept, non-clog design.

3. The impeller vane leading edges shall be mechanically self-cleaned upon each rotation as they pass across a spiral groove located on the volute suction which shall keep them clear of debris, maintaining an unobstructed leading edge.

4. The impeller(s) vanes shall shall be capable of handling solids, fibrous materials, heavy sludge and other matter found in wastewater.

5. The screw shape of the impeller inlet shall provide an inducing effect for the handling of sludge and rag-laden wastewater.

6. Fit between the impeller and shaft shall be a sliding fit with a taper-lock bushing pressed by a screw which is threaded into the end of the shaft, or a slip fit onto the shaft and drive key and fastened to the shaft by an impeller nut having cover for protection from pumped fluid.

7. Impellers shall be locked to the shaft, held by an impeller bolt.

8. Provide a wearing ring system, designed for abrasion resistance, to provide efficient sealing between the volute and impeller.

F. Mechanical Seals

1. Provide with tandem double mechanical seals running in an oil reservoir, composed of two separate lapped face seals.

   a. For the lower seal unit, between the pump and oil chamber, provide one stationary and one positively driven, rotating tungsten-carbide or silicon-carbide ring, with each pair of rings held in contact by a separate spring.

   b. For the upper seal unit, between the oil sump and the motor housing, provide one stationary tungsten-carbide or silicon-carbide ring and one positively driven tungsten-carbide, silicon-carbide, or rotating carbon ring.

   c. Ceramic and carbon seals are not acceptable.

   d. Provide seals that require neither maintenance nor adjustment and are easily replaceable.

   e. Conventional double mechanical seals with a single or a double spring between the rotating faces, or that require constant differential pressure to affect sealing and are subject to opening and penetration by pumping forces, are not acceptable. Make submersible pumps capable of continuous submergence without loss of watertight integrity to a depth of 65 feet.

2. For each pump, provide an oil chamber for the shaft sealing system.

   a. Design oil chamber to assure that air is left in the oil chamber, to absorb the expansion of the oil due to temperature variations.

b. Provide drain and inspection plug with positive anti-leak seal which is easily accessible from the outside.

G. Cable Entry Seal

1. Design to preclude specific torque requirements to insure a watertight and submersible seal.

2. Provide a single cylindrical elastomer grommet having a close tolerance fit against the cable outside diameter and the entry inside diameter and compressed by the entry body containing a strain relief function, separate from the function of sealing the cable.

3. Separate the cable entry junction chamber and motor by a stator lead sealing gland or terminal board, which isolates the motor interior from foreign material gaining access through the pump top.

4. Epoxies, silicones, or other secondary sealing systems shall not be considered equal.

H. Motor and Cable

1. Squirrel-cage induction, shell type design, housed in an air-filled, watertight chamber, NEMA B type.

2. Rating: Explosion-proof, as defined by Factory Mutual (FM).

3. Insulate stator winding and stator leads with moisture resistant Class H insulation, rated for a temperature of 180ºC.

   a. The stator shall be insulated by the trickle impregnation method resulting in a winding fill factor of 95%.

4. Designed for continuous duty, capable of sustaining a minimum of 15 starts per hour.

5. Limit temperature rise of the motor to that specified in NEMA MG-1 for Class B insulating materials when operating continuously under load.

6. Hermetically seal the junction chamber, containing the terminal board, from the motor.

7. Make connection between the cable conductors and stator leads with threaded compressed type binding post permanently affixed to a terminal board.

8. Cable

   a. Continuous, nonwicking submersible electrical cable with the correct number of conductors sized in accordance with NFPA 70.

   b. Cables containing wicking fillers are not acceptable.

   c. Provide sufficient length to reach the junction box.

9. Leakage Sensor

   a. Provide to detect water in the stator chamber.

   b. When leakage sensor is activated, stop the motor and send an alarm.

   c. Operate on 120VAC.

d. Use of sensing probes between the mechanical seals are acceptable.

e. Trip temperature above 125°C (257° F) for Pumps 3-5 and 140°C (284° F) for Pumps 1-2 are not allowed.

I. Cooling System

1. Provide each unit having a motor of 15 hp or greater with a cooling system and thermal sensors to monitor stator temperatures.

a. The cooling system shall provide for continuous operation in liquid or ambient temperatures up to 104 degrees F (40 deg C).

b. The cooling system shall be specifically designed for use with variable speed applications and compatible with the application specified herein.

c. Fans, blowers, or auxiliary cooling systems mounted external to the pump motor are not acceptable.

d. The cooling system may rely on radiation of excess heat energy to the fluid in the wet well or , alternatively, the pumped fluid via a closed-circuit circulating system utilizing either oil or glycol, or a combination of these.

e. It is specifically required that the cooling system be compatible with contemplated control schedule, which may require that motor cases be exposed continuously or intermittently.

f. Cooling systems shall not employ the pumped fluid to directly cool the motor through wastewater passageways incorporated into the motor shell. It is preferred that the motor be cooled by the wastewater via fins incorporated into the motor shell.

g. If an internal liquid circulation system is employed for cooling purposes, the liquid shall be glycol or a heat transfer oil which shall in turn circulate past heat exchange surfaces incorporated into the cavity behind the pump impeller.

h. If the motor is an oil-filled type it shall be positively cooled by circulating oil through the windings to passages within the pump designed as a heat exchanger to transfer heat to the pumped fluid. Vanes cast into the rear impeller shroud shall be provided to circulate pumped flow past a heat exchanger in the shaft seal area to provide the required cooling. Cooling water passages in the motor’s shell are specifically prohibited.

2. Equip stator with three thermal switches, embedded in the end coils of the stator winding (one switch in each stator phase).

a. Use thermal switches in conjunction with external motor overload protection and wire to the control panel.

b. Thermal sensors shall signal an alarm and shut down the motor when opened.

J. Control and Status Monitoring unit

1. The thermal switches and float switches shall be connected to a Flygt Mini-CAS, ABS CA 462, or equal, control and status monitoring unit for Pumps 1-2.

2. The thermal switches and float switches shall be connected to a Flygt MAS 801, ABS CA 462, or equal, control and status monitoring unit for Pumps 3-5.

3. The monitoring unit shall be designed to be mounted in the pump control panel.

2.04 ACCESSORIES

A. Provide submersible pumps with pump lifting chains, upper guide rail brackets, intermediate guide rail brackets, cable holder assemblies, safety chain hook assemblies, discharge connection fitting, anchor bolts, and all other accessories necessary to complete the installation as specified and as shown on the drawings.

B. Anchor Bolts

1. Comply with Section 05 50 01.

2. Calculations are required.

3. Minimum diameter: 3/4-inch.

C. Discharge Connection Fitting

1. Shall either be horizontal or elbow discharge type as indicated. The anchorage system shall be designed to transmit forces safely to the structure.

2. Anchor discharge connection fittings into 1.5” thick mounting plate to protect concrete at edges from cracking/breaking. Mounting plate shall be 316 stainless steel.

D. Chain

1. Equip pumps with Type 316 stainless steel chain of adequate strength and length to permit raising pumps for inspection and removal.

E. Guide System

1. Guide rails, guide supports, and anchor bolts may be provided by either the Contractor or manufacturer but, in either case, comply with the manufacturer’s requirements and the requirements of this specification for these components.

2. Provide guide rails, guide supports, and anchor bolts of Type 316 stainless steel.

3. Provide each pump with a guide rail and support system to allow easy removal of the pump without entering the wet well. The pump shall be easily removable requiring no bolts, nuts, or other fastening to be removed.

4. The pump, guiderail, and support system shall be designed to automatically connect the pump to the discharge piping when lowered into place on the discharge connection. When in place, the connection shall effect a watertight seal with the discharge fitting.

5. Guide shall be dual rail size recommended by the pump manufacturer. Systems that employ cables or single guide rails are not allowed.

6. Bolt the discharge connection to the floor and use as a lower attachment for the guide rails.

7. The design shall be non-sparking and shall conform to UL requirements for installation in a location classified in accordance with NFPA 70, article 500 for Class 1, Group D, Division 1 locations.

8. No portion of the pump shall bear directly on the floor of the sump and no rotary motion of the pump shall be required for sealing.

9. Once the pump has been positioned on it's support fitting at the discharge fitting, the guide bar system shall not be required for pump support.

F. Spare Parts

1. Provide the following spare parts for each pump model specified:

a. 2 complete mechanical seals

b. Any special tools required for seal and for bearing installation/removal or to dismantle pumps

c. Any additional spare parts recommended by manufacturer

2.05 SOURCE QUALITY CONTROL

A. Factory Testing

1. Test each pump for performance at the factory to determine head versus capacity at seven different points, efficiencies, and kilowatt draw required for the operating points that are specified. All tests shall be run in accordance with the American Hydraulic Institute Level 1B Standards for Pumps 3-5 and Level 2B for Pumps 1-2.

2. Include the following:

a. Check impeller, motor rating and electrical connections compliance with the specifications.

b. Prior to submergence, run each pump to establish correct rotation and mechanical integrity.

c. Run each pump for 30 minutes submerged, a minimum of 6 feet under water.

3. Provide written report summarizing results of the tests and stating the tests have successfully been completed.

PART 3 - EXECUTION

3.01 INSTALLATION

A. Align, connect, and install each pump in accordance with the manufacturer's written instructions.

B. Provide factory-trained personnel to check installation and test initial operation.

C. Certify installation and initial operation of all components on Manufacturer's Installation Certification Form in Section 01 99 00.

3.02 FIELD QUALITY CONTROL

A. Field quality control and inspections will be performed as specified in Section 01 45 23.

B. Corrective Actions: Replace or repair work to eliminate defects, deficiencies, and irregularities.

3.03 MANUFACTURER'S FIELD SERVICES

A. Provide field inspection and instruction services by factory-trained service technician of the manufacturer as specified in Sections 01 79 00, 01 81 00, and 01 82 50. Services by a sales representative are not acceptable.

1. Provide minimum 2 visits of 8 hours, excluding travel time, to inspect and test initial operation, and make necessary adjustments.

2. Provide minimum 1 visit of 4 hours, excluding travel time, to train plant operators.

B. Complete and submit the following forms in Section 01 99 00:

1. Manufacturer's Installation Certification Form.

2. Manufacturer's Instruction Certification Form.

3.04 DEMONSTRATION

A. Comply with Section 01 81 00 and 01 82 50.

B. Coordination with Sampling Procedures

1. To facilitate the Owner's planned periodic sampling of raw water from the wet well, demonstration of the submersible pumps shall include the development and documentation of the procedures necessary to establish, maintain and cease flow to the sampling station depicted in the Drawings. Procedures to be evaluated include, but are not limited to, the following:

a. Configuration (i.e., opening and closing) of sluice gates to facilitate the removal of wet well contents without refilling.

b. Partial closure of the eccentric plug valve on the 4-inch discharge line, to increase the head observed by the pump(s) in order to ensure the hydraulic grade line reaches the elevation of the sampling station.

2. Contractor shall document valve and gate settings required to facilitate sampling, as well as the numbers of operator turns necessary to achieve them.

3. Contractor shall document a range of flow rates to be expected at the sampling station based on the available range of eccentric plug valve positions.

END OF SECTION

(THIS PAGE LEFT BLANK INTENTIONALLY)

SECTION 46 05 13

GENERAL REQUIREMENTS FOR EQUIPMENT

PART 1 - GENERAL

1.01 SECTION INCLUDES

A. General requirements applicable to mechanical equipment and systems.

B. Ensure mechanical equipment meets the requirements of this Section in addition to the specific requirements of the individual equipment specification Sections.

1.02 REFERENCED SECTIONS

A. The following Sections are referenced in this Section

1. Section 01 33 00 – Submittals
2. Section 01 61 11 – Seismic Anchorage and Bracing
3. Section 01 78 23 – Operation and Maintenance Data
4. Section 01 81 00 – Equipment and System Testing
5. Section 01 99 90 – Reference Forms
6. Section 09 96 00 – High Performance Coatings

1.03 GENERAL REQUIREMENTS

A. Equipment shall be of new construction and comply with the following requirements:

1. Designed for stresses that may occur during fabrication, transportation, erection, and during continuous or intermittent operations.
2. Adequately anchored, leveled, aligned, and ready for operation without binding or overloading of critical components or motors.
3. Installed with necessary appurtenances required for proper operation and installation in a neat and workmanlike manner.
4. Tested by factory trained service mechanics or engineers.

1.04 UNIT RESPONSIBILITY

A. Equipment systems shall be assembled as a unit by a single manufacturer responsible for the entire unit.

1. Responsibility extends to selecting components of the system to assure compatibility, proper operation, and compliance with specified performance requirements.
2. Unit responsibility does not relieve Contractor of responsibility to Owner for performance of the Work.

1.05 QUALITY ASSURANCE

A. Arrangement

1. The arrangement of equipment shown on the Drawings is based upon information available at the time of design and is not intended to show exact dimensions peculiar to a specific manufacturer.

2. Some features of the illustrated equipment installation may require revision to meet actual equipment installation requirements.

3. Structural supports, foundations, connected piping, and valves shown may have to be altered to accommodate the equipment provided. Additional payment will not be made for such revisions and alterations.

1.06 SUBMITTALS

A. Comply with Section 01 33 00.

B. General: Provide separate submittals for each equipment item or group of related equipment items.

C. Equipment Anchorage: Submit anchor bolt sizing calculations.

D. Bearing Life Calculations: Submit bearing L-10 life calculations in accordance with ABMA requirements.

1.07 OPERATION AND MAINTENANCE MANUALS

A. Furnish operation and maintenance manuals for each equipment system in accordance with the Section 01 78 23 requirements.

1.08 PROTECTION DURING SHIPMENT

A. Shipping: Ship equipment in sealed, weather-tight, enclosed conveyances, and protected against damaging stresses during transport and handling.

B. Bearing Housings: Wrap or otherwise seal to prevent contamination by grit and dirt, and tape closed ventilation and other types of openings.

C. Repair any damaged materials to conform to the requirements of the Contract before the assembly is incorporated into the Work. The Contractor shall bear the costs arising out of dismantling, inspection, repair, and reassembly.

PART 2 - PRODUCTS

2.01 PIPING CONNECTIONS ON EQUIPMENT

A. Flanges on Equipment: Conform to dimensions and drilling specified in ANSI B16.1, Class 125 unless otherwise required by Division 40 pipe specifications or the Drawings.

B. Pipe Flanges: Conform to dimensions and drilling specified in AWWA C207, Class D, 125 lb flanges provided on connection pipe.

C. Threaded Flanges: Flat faced with standard taper pipe thread conforming to ANSI B1.20.1.

D. Pipe Threads: Conform in dimension and limits of size to ANSI B1.1, coarse thread series, Class 2 fit.

E. Flange Assembly Bolts and Nuts

1. Heavy pattern, hexagonal head, stainless steel machine bolts with heavy pattern, hot pressed, hexagonal nuts conforming to ANSI B18.2.1 and B18.2.2.

2. Threads: Unified Screw Threads, Standard Coarse Thread Series, Class 2A and 2B, ANSI B1.1.

2.02 BEARINGS

A. Service: Unless otherwise specified, equipment bearings shall be oil or grease lubricated, ball or roller type, designed to withstand the stresses of the service specified.

B. Rating

1. L-10 Rating Life: Minimum 50,000 hours unless otherwise specified. Determine rating life using the maximum equipment operating speed.

2. Determine rating in accordance with the latest revisions of AFBMA Methods of Evaluating Load Ratings of Ball and Roller Bearings.

3. Where individual equipment Sections specify higher bearing life ratings, those requirements supersede the minimum bearing life specified above.

C. Grease Lubricated Bearings

1. Fit with easily accessible grease supply, flush, drain and relief fittings, except those bearings specified to be factory sealed and lubricated.

2. Extend non-accessible grease fittings to an easily accessible location using 1/4-inch diameter stainless steel tubing as an extension tube.

3. Grease supply fittings: Standard hydraulic Alemite or Zerk type.

D. Oil Lubricated Bearings

1. Equip with either a pressure lubricating system or a separate oil reservoir type system.

2. Size oil lubrication systems to safely absorb the heat energy normally generated in the bearing under a maximum ambient temperature of 60°C.

3. Equip with a filler pipe and an external level indicator gage.

E. Incorporate bearing housings with sufficient cooling to maintain surface temperature at 65 degrees C or less for continuous operation at bearing rated load and a 50 degrees C ambient temperature, or install appropriate shielding on bearings that are accessible to touch.

2.03 DRIVE COMPONENTS

A. V-Belt Drives

1. Design with sliding base or other suitable tension adjustment.

2. Design with service factor of at least 1.6 at maximum speed.

3. Statically balance sheaves. In addition, dynamically balance sheaves that will operate at peripheral speed of more than 5,500 feet per minute.

4. Belts: Provide anti-static belts when explosion-proof equipment or environment is specified.

B. Gear Reducers

1. Provide drives with nominal input horsepower rating equal to or greater than the nameplate horsepower of the drive motor.

2. Provide gear drives manufactured in accordance with AGMA Class II service requirements.

2.04 SHAFT COUPLINGS

A. Type and Rating: Non-lubricated, designed for a minimum of 50,000 hours operating life.

B. Equipment with a driver greater than 1/2 horsepower, and where the input shaft of a driven unit is directly connected to the output shaft of the driver, shall have its two shafts connected by a flexible coupling which can accommodate angular misalignment, parallel misalignment and end float, and which cushions shock loads and dampens torsional vibrations.

C. Provide couplings recommended by the coupling manufacturer for the specific application, considering horsepower, speed of rotation, and type of service.

D. Install couplings in conformance to the manufacturer's instructions.

2.05 GUARDS

A. Guards

1. Enclose exposed moving parts with guards that meet the requirements of federal and state OSHA requirements.

B. Materials

1. Fabricate guards of 14 gauge steel and expanded metal screen to provide visual inspection of moving parts without removal of the guard.

2. Galvanize after fabrication and paint with the equipment.

3. Fasteners: Type 304 stainless steel.

2.06 NAMEPLATES AND LIFTING EYES

A. Nameplates

1. Provide on each item of equipment with the specified equipment name or abbreviation and equipment number.

2. Engrave or stamp (not painted) on stainless steel and fastened to the equipment in an accessible location with stainless steel screws or drive pins.

B. Lifting Eyes

1. Provide on equipment weighing over 80 lbs.

2.07 SPARE PARTS AND LUBRICANTS

A. Spare Parts: Provide for each item of mechanical, electrical, and instrumentation equipment a supply of spare parts and special tools required for the starting, testing, adjustments, and initial operation. Pack spare parts required by individual equipment specifications:

1. Pack spare parts with individual weights less than 50 pounds in a heavily constructed painted wood box with hinged cover and a locking clasp.

2. Provide a typed inventory of spare parts stapled to the underside of the cover.

3. Tag and wrap each part in a waterproof container. Spare bearings shall be encapsulated in an airtight plastic film.

B. Lubricants: Provide for each item of mechanical equipment of the type recommended by the equipment manufacturer a supply of the lubricant for startup, testing, and initial operation.

1. Provide a list showing the required lubricants for each item of mechanical equipment. List estimated quantity of lubricant needed for a full year's operation, assuming the equipment will operate continuously.

2. Lubricants shall be products of the Owner's current lubricant supplier.

3. Limit the various types of lubricants by consolidating them, with the equipment manufacturer's approval, into the least number of different types.

2.08 ANCHOR BOLTS

A. Size anchor bolts and concrete anchors for equipment in accordance with Section 01 61 11.

2.09 FACTORY APPLIED COATINGS

A. Ship each item of equipment to the site of the work with a shop applied prime coating prepared in accordance with the requirements of Section 09 96 00 and compatible with the finish coatings.

B. Finish Painting of Motors: Factory-apply finish coats using manufacturer's standard coating, unless otherwise specified in Section 09 96 00.

2.10 SPECIAL TOOLS AND ACCESSORIES

A. Furnish with each piece of equipment all tools, instruments, or accessories of a special nature that are required to assemble, disassemble, maintain, or repair any item of equipment.

1. Tag and mark each piece indicating their service and the piece of equipment for which their use is intended.

2. Include a list and description or pictorial representation of all special tools required for a given piece of equipment for insertion into the equipment operation and maintenance manual.

2.11 FASTENERS AND DIELECTRIC ISOLATION

A. Fasteners for Aluminum: Stainless steel.

B. Isolate steel surfaces, other than stainless steel, from aluminum with stainless steel, neoprene, non-metallic washers or other acceptable material.

C. Dissimilar Metals: Protect from galvanic corrosion by means of pressure tapes, coatings, or isolators.

PART 3 - EXECUTION

3.01 INSTALLATION

A. Install, align, and test each item of equipment within the tolerances recommended by the equipment manufacturer.

B. When specified in individual Sections, install and test equipment under the direction of installation engineers who have been factory trained by the equipment manufacturer.

C. Perform all work in accordance with manufacturer's recommendations.

3.02 QUALITY CONTROL

A. Test equipment in accordance with Section 01 81 00 and the individual equipment Section.

B. Furnish written certification from the equipment manufacturers that each item has been installed, aligned, and tested correctly and that the installation meets the manufacturer's requirements for efficient, trouble-free operation. Utilize Manufacturer’s Installation Certification Form provided in Section 01 99 90.

C. Equipment manufacturer’s certification shall not be construed as relieving the Contractor of his overall responsibility for this portion of the work.

END OF SECTION

SECTION 46 05 14

EQUIPMENT MOUNTING

PART 1 - GENERAL

1.01 SECTION INCLUDES

A. Equipment mounting requirements, including fabricated steel equipment bases, concrete equipment pads, supports, anchorage, and accessories.

1.02 REFERENCED SECTIONS

A. The following Sections are referenced in this Section

1. Section 01 33 00 – Submittals
2. Section 05 50 01 – Anchor Bolts and Anchoring Devices
3. Section 09 96 00 – High Performance Coatings

1.03 QUALITY ASSURANCE

A. Provide supports, anchorage, and equipment mounts that are sized and designed to resist the calculated forces and that are in accordance with the manufacturer's recommendations, the current International Building Code (IBC), and industry standards requirements.

1.04 DESIGN REQUIREMENTS

A. Design equipment mounts and anchorages to resist the minimum lateral force required by the latest edition of the IBC, the manufacturer of the equipment, or a lateral seismic force of 60% of the operating weight of the equipment, whichever is greater.

B. Equipment anchor bolt sizes shown on the Drawings are the minimum required size.

C. Equipment anchorage design and calculations shall be prepared and signed by a civil or structural engineer currently registered in the state where equipment is installed.

1.05 MOUNTING REQUIREMENTS

A. Mount equipment and driver on a common fabricated steel baseplate with ample rigidity to support equipment and maintain shaft alignment without excessive deflection.

B. Mount equipment baseplates on concrete equipment pads.

1.06 SUBMITTALS

A. Comply with Section 01 33 00.

B. Shop Drawings: Provide drawings of equipment bases and anchorage details.

C. Anchorage Calculations: Submit stamped and signed anchor bolt sizing calculations.

PART 2 - PRODUCTS

2.01 ANCHOR BOLTS AND CONCRETE ANCHORS

A. Provide anchor bolts and concrete anchors in accordance with Section 05 50 01.

2.02 CONCRETE EQUIPMENT PADS

A. Construct concrete pedestals at least 6 inches wider and longer than the steel or cast base so that the distance between the anchor bolts and the edge of concrete is at least 3 inches.

B. Unless otherwise shown or specified, all conduits, piping connections, drains, etc. shall be enclosed by the concrete base.

C. Shape concrete pedestals to drain away from the base.

D. Allow concrete to cure 14 days or until the concrete has cured to 75 percent of its specified compressive strength before placing equipment on the concrete pedestal.

E. Do not start equipment placed on the concrete pedestal until the concrete has cured for 28 days or to 100 percent of its specified compressive strength.

2.03 STRUCTURAL STEEL EQUIPMENT BASES

A. Provide structural steel bases with thickened steel pads for doweling.

1. Fabricate equipment base using continuous welds to seal seams and contact edges between steel members.

2. Grind welds smooth.

B. Design equipment bases with perimeter steel beams, intermediate stiffeners and baseplate.

1. Provide perimeter steel beams with minimum depth equal to 1/10th of the longest dimension of the base.

2. Beam depth need not exceed 14 inches provided that the baseplate deflection is kept within acceptable limits to minimize misalignment, as determined by the manufacturer.

C. Provide grout holes for the bases of equipment where vibration isolation is not specified.

D. Provide minimum 1-inch thick steel mounting baseplate for equipment with drivers 20 horsepower and larger.

E. Shop-apply prime coat prepared in accordance with the requirements of Section 09 96 00 and compatible with the finish coatings

PART 3 - EXECUTION

3.01 GENERAL

A. Connect piping to equipment with flexible connections and/or expansion joints such that the intended use of these joints is maintained in the piping system.

B. Coordinate the location of electrical conduit and piping penetrations within the concrete pad and equipment base.

1. Stub-up penetrations on the same side of the equipment as required for connection to the equipment.

2. Locate equipment drains for proper drainage away from equipment.

3.02 EQUIPMENT MOUNTING

A. Mount equipment on equipment baseplates using stainless steel shims so that equipment and driver are level in both directions and mounted within machined areas on baseplate. Do not use wedges to obtain level and alignment.

B. Utilize templates for placement of anchor bolts prior to placing concrete for equipment pad.

C. Apply a non-seize or non-galling compound on the threads of anchor bolts and concrete anchors.

3.03 SHAFT ALIGNMENT

A. After the complete unit has been installed on the equipment pad and leveled, check the factory shaft alignment by disassembling coupling and measuring angular and parallel orientations.

B. Use reverse-indicator dial or laser type alignment equipment to align shafts to within the manufacturer's required tolerance. Allow for thermal expansion, spacer coupling length and other factors that affect proper shaft alignment.

3.04 GROUTING EQUIOMENT BASED

A. After alignment has been completed, tighten anchor bolts and grout between equipment base and equipment pad. Use non-shrink and non-ferrous grout no less than 7/8 inch and no more than 1-5/8-inches thick.

B. Allow 48 hours for grout to harden and then remove jacking screws. Re-check torque on anchor bolts and re-check shaft alignment, making corrections as necessary.

END OF SECTION

(THIS PAGE LEFT BLANK INTENTIONALLY)

DocuSign Envelope ID: 09934EE9-0C55-40A3-8631-9C0AF6797111

C:\Users\sbarber\ACCDocs\Cadworks Inc\Sweet Home WWTP\Project Files\Active Design - CAD\2D Design\01_General\19-2605-OR-G.dwg G-000 7/26/2022 9:38 AM SBARBER 23.1s (LMS Tech)

MAHLER WATER RECLAMATION FACILITY IMPROVEMENTS PROJECT - PHASE 1

AUGUST 2022 VOLUME 3 OF 3

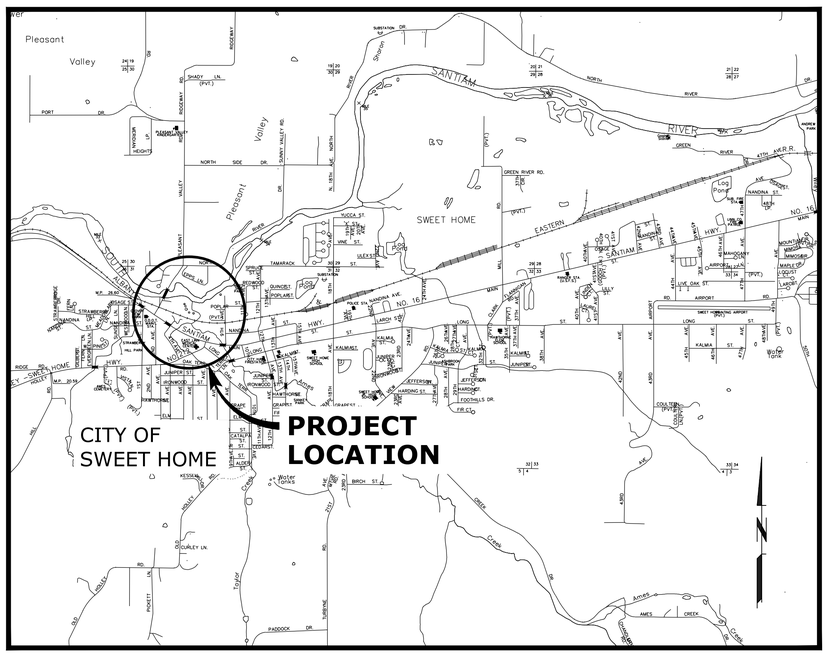

VICINITY MAP

SCALE: 1"=2000'

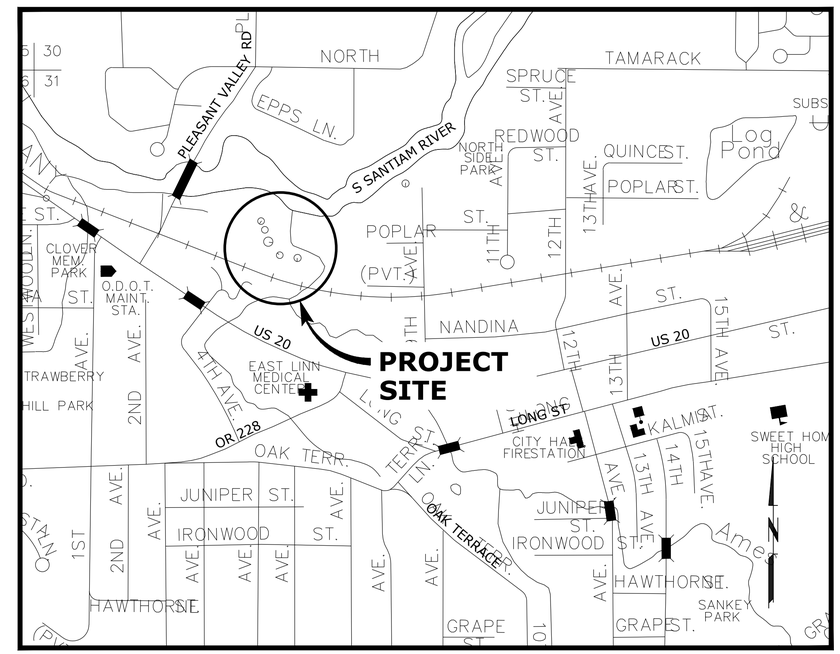

LOCATION MAP

SCALE: 1"=500'

WEST YOST
Water. Engineered.

ATTENTION: OREGON LAW REQUIRES THE CONTRACTOR TO FOLLOW THE RULES ADOPTED BY THE OREGON UTILITY NOTIFICATION CENTER. THOSE RULES ARE SET FORTH IN OAR 952-001-0010 THROUGH OAR 952-001-0090. THE CONTRACTOR MAY OBTAIN COPIES OF THE RULES BY CALLING THE UTILITY NOTIFICATION CENTER. (NOTE: THE TELEPHONE NUMBER FOR THE OREGON UTILITY NOTIFICATION CENTER IS 503-246-6699.)

DocuSign Envelope ID: 09934EE9-0C55-40A3-8631-9C0AF6797111

C:\Users\sbarber\ACCDocs\Cadworks Inc\Sweet Home WWTP\Project Files\Active Design - CAD\2D Design\01_General\19-2605-OR-G.dwg G-001 7/29/2022 11:18 AM SBARBER 23.1s (LMS Tech)

DRAWING NO.	SHEET NO.	SHEET NO.
GENERAL		
1	G-000	COVER SHEET
2	G-001	DRAWING INDEX
3	G-002	GENERAL & CIVIL NOTES
4	G-003	GENERAL & CIVIL SYMBOLS
5	G-004	GENERAL & CIVIL ABBREVIATIONS
6	G-005	DESIGN CRITERIA, PROCESS FLOW DIAGRAM & HYDRAULIC PROFILE
CIVIL		
7	C-001	CIVIL DETAILS 1
8	C-002	CIVIL DETAILS 2
9	C-003	CIVIL DETAILS 3
10	C-004	CIVIL DETAILS 4
11	C-005	CIVIL DETAILS 5
12	C-006	CIVIL DETAILS 6
13	C-007	BATHROOM RELOCATION DETAILS
14	C-010	EXISTING CONDITION PLAN
15	C-011	EXISTING UTILITIES PLAN
16	C-020	SITE DEMOLITION PLAN
17	C-021	UTILITY DEMOLITION PLAN
18	C-022	BACKWASH STORAGE/IMHOFF TANK DEMOLITION
19	C-030	OVERALL SITE PLAN, STRUCTURE COORDINATES, STAGING AND ACCESS, SURVEY CONTROL POINTS
20	C-040	EROSION CONTROL NOTES
21	C-041	EROSION CONTROL PLAN
22	C-042	EROSION CONTROL DETAILS
23	C-050	OVERALL GRADING PLAN
24	C-051	MAIN ELECTRICAL & BLOWER BUILDING AREA GRADING PLAN
25	C-052	WALL PROFILES
26	C-060	YARD PIPING PLAN
27	C-061	ENLARGED YARD PIPING PLAN, SECTION, AND KEY NOTES
28	C-062	INFLUENT PUMP STATION PIPELINE DEMO AND RELOCATION SEQUENCING PLAN
29	C-070	PIPE PROFILES - 1
30	C-071	PIPE PROFILES - 2
31	C-072	PIPE PROFILES - 3
32	C-073	PIPE PROFILES - 4
33	C-074	PIPE PROFILES - 5
34	C-075	PIPE PROFILES - 6
ARCHITECTURAL		
35	A-001	ARCHITECTURAL LEGEND AND CODE INFORMATION
36	A-002	ARCHITECTURAL DETAILS - HORIZONTAL & VERTICAL ASSEMBLIES,
	DOOR	& WINDOW TYPES & SCHEDULES
37	A-003	ARCHITECTURAL DETAILS - OPENING DETAILS
38	A-004	ARCHITECTURAL DETAILS - OPENING AND MISCELLANEOUS DETAILS
39	A-005	ARCHITECTURAL DETAILS - MISCELLANEOUS DETAILS
40	A-100	SOUTH ELECTRICAL BUILDING PLAN, ELEVATIONS & SECTIONS
41	A-400	MAIN ELECTRICAL & BLOWER BUILDING FLOOR, ROOF, AND RCP PLAN
42	A-401	MAIN ELECTRICAL & BLOWER BUILDING ELEVATIONS AND SECTIONS
43	A-402	MAIN ELECTRICAL & BLOWER BUILDING WALL SECTIONS
STRUCTURAL		
44	S-001	GENERAL STRUCTURAL NOTES, STRUCTURAL ABBREVIATIONS
45	S-002	SPECIAL INSPECTIONS AND STRUCTURAL NOTES
46	S-003	MATERIAL NOTES
47	S-004	MATERIAL NOTES CONTINUED
48	S-005	TYPICAL CONCRETE DETAILS
49	S-006	TYPICAL CONCRETE REINFORCING DETAILS
50	S-100	RETAINING WALL DETAILS
51	S-110	INFLUENT PUMP STATION PLANS & SECTIONS
52	S-111	INFLUENT PUMP STATION TRANSVERSE SECTION
53	S-112	INFLUENT PUMP STATION TRANSVERSE SECTION
54	S-113	INFLUENT PUMP STATION SECTIONS & DETAILS
55	S-114	EXISTING INFLUENT SEWER DIVERSION STRUCTURES
56	S-400	MAIN ELECTRICAL & BLOWER BUILDING FOUNDATION & ROOF FRAMING PLANS
	S-401	MAIN ELECTRICAL & BLOWER BUILDING FOUNDATION & FRAMING DETAILS
57	S-402	GENERATOR FOUNDATION PLAN & SECTION
58		
MECHANICAL		
59	M-001	MECHANICAL DETAILS 1
60	M-002	MECHANICAL DETAILS 2
61	M-003	MECHANICAL DETAILS 3
62	M-004	MECHANICAL DETAILS 4
63	M-110	ISOMETRIC VIEW
64	M-111	INFLUENT PUMP STATION PLANS
65	M-112	SECTIONS AND DETAILS 1
66	M-113	SECTIONS AND DETAILS 2
67	M-114	SECTIONS AND DETAILS 3

DRAWING NO.	SHEET NO.	SHEET NO.
HVAC		
68	H-001	HVAC SYMBOL LIST & GENERAL NOTES
69	H-100	SOUTH ELECTRICAL BUILDING HVAC FLOOR PLAN
70	H-400	MAIN ELECTRICAL & BLOWER BUILDING HVAC FLOOR PLAN
ELECTRICAL		
71	E-001	ELECTRICAL ABBREVIATIONS
72	E-002	ELECTRICAL SYMBOL LEGEND
73	E-003	ELECTRICAL DETAILS 1
74	E-004	ELECTRICAL DETAILS 2
75	E-010	EXISTING CONDITIONS AND DEMOLITION ONE-LINE DIAGRAM
76	E-011	SERVICE ENTRANCE ONE-LINE DIAGRAM
77	E-013	MCC-200 ONE-LINE DIAGRAM
78	E-014	MCC-300 ONE-LINE DIAGRAM
79	E-020	POWER CONDUIT SCHEDULE 1
80	E-021	POWER CONDUIT SCHEDULE 2
81	E-022	POWER CONDUIT SCHEDULE 3
82	E-024	GROUNDING CONDUIT SCHEDULE
83	E-025	CONTROL CONDUIT SCHEDULE 1
84	E-026	CONTROL CONDUIT SCHEDULE 2
85	E-027	MECHANICAL & LUMINAIRE SCHEDULE
86	E-031	PANEL SCHEDULES 1
87	E-032	PANEL SCHEDULES 2
88	E-050	SERVICE ENTRANCE - RACEWAY BLOCK DIAGRAM
89	E-051	INFLUENT PUMP STATION - RACEWAY BLOCK DIAGRAM
90	E-101	ELECTRICAL SITE DEMOLITION PLAN
91	E-102	ELECTRICAL OVERALL SITE PLAN
92	E-103	ELECTRICAL HAZARDOUS LOCATION PLAN
93	E-104	MAIN ELECTRICAL & BLOWER BUILDING - FLOOR PLAN
94	E-105	MAIN ELECTRICAL & BLOWER BUILDING - MCC-200 & MSB-1 ELEVATIONS
95	E-106	SOUTH ELECTRICAL BUILDING - DEMOLITION FLOOR PLAN
96	E-107	SOUTH ELECTRICAL BUILDING - NEW FLOOR PLAN
97	E-108	SOUTH ELECTRICAL BUILDING - MCC-300 ELEVATIONS
98	E-110	INFLUENT PUMP STATION - OVERALL SITE PLAN
99	E-111	INFLUENT PUMP STATION - HAZARDOUS LOCATION PLAN
100	E-112	INFLUENT PUMP STATION - ELECTRICAL PLAN & SECTION
101	E-113	INFLUENT PUMP STATION - PUMP DISCONNECT PANEL & STAND ELEVATIONS
102	E-901	INFLUENT PUMP STATION - MOTOR SCHEMATIC 1
103	E-902	INFLUENT PUMP STATION - PDP-110-01 LCS
104	E-903	INFLUENT PUMP STATION - MOTOR SCHEMATIC 2
105	E-904	INFLUENT PUMP STATION - MOTOR SCHEMATIC 3
106	E-905	INFLUENT PUMP STATION - PDP-110-02 LCS
107	E-906	INFLUENT PUMP STATION - PDP-110-03 LCS
INSTRUMENT AND CONTROL		
108	IC-006	IPS - PANEL NIP-300 ETHERNET COMMUNICATIONS INTERCONNECT DIAGRAM
109	IC-010	MNP-100 MAIN PLC / OT NETWORK PANEL LAYOUT - FRONT & REAR VIEW
110	IC-011	MNP-100 MAIN PLC / OT NETWORK PANEL LAYOUT - SIDE VIEW
111	IC-012	MNP-100 MAIN PLC / OT NETWORK PANEL BILL OF MATERIAL
112	IC-013	MNP-100 MAIN PLC / OT NETWORK PANEL POWER DISTRIBUTION SCHEMATIC
113	IC-014	MNP-100 MAIL PLC / OT NETWORK PANEL POINT I/O SLOT 1 INPUT MODULE
114	IC-015	MNP-100 MAIN PLC / OT NETWORK PANEL POINT I/O SLOT 2 INPUT MODULE
115	IC-022	NIP-300 NETWORK INTERFACE PANEL LAYOUT (FOR CP-300)
116	IC-300	CP-300 ELEVATION VIEW
117	IC-302	CP-300 TERMINAL STRIP DETAIL
118	IC-303	CP-300 TERMINAL STRIP DETAIL
119	IC-310	CP-300 POWER DISTRIBUTION SCHEMATIC
120	IC-320	CP-300 DIGITAL INPUTS, SLOT 1
121	IC-321	CP-300 DIGITAL INPUTS, SLOT 2
122	IC-330	CP-300 ANALOG INPUTS, SLOT 6 (1 OF 2)
123	IC-331	CP-300 ANALOG INPUTS, SLOT 6 (2 OF 2)
124	IC-340	CP-300 INSTRUMENT LOOP DIAGRAM, SLOT 6, POINT 0
125	IC-341	CP-300 INSTRUMENT LOOP DIAGRAM, SLOT 6, POINT 1
126	IC-342	CP-300 INSTRUMENT LOOP DIAGRAM, SLOT 6, POINT 2
127	IC-343	CP-300 INSTRUMENT LOOP DIAGRAM, SLOT 6, POINT 3
128	IC-344	CP-300 INSTRUMENT LOOP DIAGRAM, SLOT 6, POINT 4
129	IC-345	CP-300 INSTRUMENT LOOP DIAGRAM, SLOT 6, POINT 5
130	IC-346	CP-300 INSTRUMENT LOOP DIAGRAM, SLOT 6, POINT 6
131	IC-347	CP-300 INSTRUMENT LOOP DIAGRAM, SLOT 6, POINT 7
INSTRUMENTATION		
132	I-001	LEGENDS, SYMBOLS AND ABBREVIATIONS 1
133	I-002	LEGENDS, SYMBOLS AND ABBREVIATIONS 2
134	I-111	INFLUENT PUMP STATION 1
135	I-112	INFLUENT PUMP STATION 2

NO.	DATE	BY	REVISION

NOTICE

0 ½ 1

IF THIS BAR DOES NOT MEASURE 1" THEN DRAWING IS NOT TO SCALE

WJS
DESIGNED

SMB
DRAWN

PLVM
CHECKED

REGISTERED PROFESSIONAL ENGINEER
OREGON
8/20/2022
JAN. 02, 1969
PRESTON VAN METER
EXPIRES : 6/30/2024

WEST YOST
Water. Engineered.

Sweet Home
Oregon at its best!

MAHLER WATER RECLAMATION FACILITY IMPROVEMENTS PROJECT PHASE 1

DRAWING INDEX

PROJECT NO.: 19-2605 | SCALE: NO SCALE | DATE: August 2022

SHEET
G-001

DocuSign Envelope ID: 09934EE9-0C55-40A3-8631-9C0AF6797111

GENERAL NOTES

1. CONTRACTOR SHALL OBTAIN ALL NECESSARY LOCAL, COUNTY, STATE, AND UTILITY CONSTRUCTION PERMITS, AND SHALL CONTACT EACH PERMITTING AGENCY AT LEAST TWO (2) BUSINESS DAYS PRIOR TO STARTING WORK. CONTRACTOR SHALL OBTAIN ALL REQUIRED LICENSES BEFORE STARTING CONSTRUCTION.

2. WHERE INTERRUPTION OF EXISTING FACILITIES IS REQUIRED, CONTRACTOR SHALL PROVIDE 72 HOUR NOTICE TO ENGINEER AND THE AFFECTED UTILITY. CONTRACTOR SHALL ARRANGE FOR THE RELOCATION OF ANY IN CONFLICT WITH THE PROPOSED CONSTRUCTION.

3. THE CONTRACTOR SHALL COMPLY WITH ALL REQUIREMENTS OF ORS 757.542 TO 757.562. THE CONTRACTOR SHALL NOTIFY EACH UNDERGROUND UTILITY AT LEAST 48 BUSINESS-DAY HOURS, BUT NOT MORE THAN 10 BUSINESS DAYS, PRIOR TO EXCAVATING, BORING, OR POTHOLING.

4. PROVIDE 24-HOUR ACCESS FOR OPERATIONS.

5. TOPOGRAPHIC MAP WAS COMPILED BY UDELL ENGINEERING & LAND SURVEYING. THE HORIZONTAL DATUM IS OREGON STATE PLANE.

6. ANY ALTERATION OR VARIANCE FROM THESE PLANS, EXCEPT MINOR FIELD ADJUSTMENT NEEDED TO MEET EXISTING FIELD CONDITIONS, SHALL FIRST BE APPROVED BY THE ENGINEER. ANY ALTERATIONS OR VARIANCE FROM THESE PLANS SHALL BE DOCUMENTED ON CONSTRUCTION FIELD PRINTS AND TRANSMITTED TO THE ENGINEER. ANY PROPOSED CHANGES IN CONSTRUCTION PLANS MUST BE SUBMITTED IN WRITING AND APPROVED BY ENGINEER PRIOR TO COMMENCING WORK.

7. CONTRACTOR SHALL KEEP AND MAINTAIN A CURRENT SET OF DRAWINGS ON SITE. CONTRACTOR TO KEEP ACCURATE "AS-BUILT" RECORD COPY OF PLANS. "AS-BUILT" PLANS TO BE RETURNED TO ENGINEER AT COMPLETION OF PROJECT.

8. CONTRACTOR SHALL NOTIFY THE ENGINEER AND OWNER 48 HOURS BEFORE STARTING CONSTRUCTION, AND 24 HOURS BEFORE RESUMING WORK AFTER SHUTDOWNS EXCEPT FOR NORMAL RESUMPTION OF WORK FOLLOWING SATURDAYS, SUNDAYS, OR HOLIDAYS. CONTRACTOR SHALL NOTIFY THE ENGINEER A MINIMUM OF 48 HOURS PRIOR TO ANY TESTING OR REQUIRED INSPECTION.

9. THE LIMITS OF THE SITE THAT MAY BE USED FOR CONSTRUCTION, STORAGE, MATERIALS HANDLING, PARKING OF VEHICLES AND OTHER OPERATIONS RELATED TO THE PROJECT ARE SHOWN ON THE PLANS. LIMITS OF WORK ALSO INCLUDE RIGHTS OF ACCESS OBTAINED BY THE CONTRACTOR, SUBJECT TO ALL PUBLIC LAWS AND REGULATIONS AND RIGHTS OF ACCESS BY UTILITY COMPANIES AND OTHER HOLDERS OF EASEMENT RIGHTS.

10. CONTRACTOR SHALL MAKE ALL ARRANGEMENTS NECESSARY TO OBTAIN SUFFICIENT WATER, POWER AND LIGHTING FOR CONSTRUCTION PURPOSES.

11. THE DRAWINGS SHOW APPROXIMATE LOCATIONS AND DEPTHS OF EXISTING UNDERGROUND UTILITIES. BEFORE ORDERING MATERIALS OR BEGINNING CONSTRUCTION, THE CONTRACTOR SHALL POT-HOLE AND VERIFY THE LOCATION/DEPTH OF EXISTING UNDERGROUND UTILITIES AND REPORT ANY POTENTIAL CONFLICTS TO THE CONSTRUCTION MANAGER. CONTRACTOR SHALL KEEP EXISTING UTILITIES IN SERVICE AND PROTECT THEM DURING CONSTRUCTION.

12. CONTRACTOR SHALL VERIFY ALL DIMENSIONS BEFORE STARTING WORK AND SHALL IMMEDIATELY NOTIFY THE ENGINEER OF ANY DISCREPANCIES.

13. CONTRACTOR TO FIELD CHECK ALL EXISTING STRUCTURES FOR VERIFICATION OF DIMENSIONS WHERE EQUIPMENT IS TO BE INSTALLED.

14. CONTRACTOR SHALL REFER TO ALL RELATED DRAWINGS AND TO MANUFACTURER'S DRAWINGS FOR COMPLETE DETAILS OF A GIVEN FACILITY.

15. EXISTING ELEVATIONS SHOWN ON DRAWINGS WERE BASED ON SURVEY DATA AND INFORMATION SUPPLIED BY THE UTILITY COMPANIES. CONTRACTOR SHALL FIELD VERIFY ALL ELEVATIONS SHOWN ON DRAWINGS.

16. SEE ALL DISCIPLINE DRAWINGS FOR ADDITIONAL SYMBOLS AND NOTES.

17. NOT ALL EXISTING UTILITIES AND UNDERGROUND STRUCTURES ARE SHOWN IN DRAWINGS. THE LOCATION OF EXISTING UTILITIES AND OTHER UNDERGROUND STRUCTURES SHOWN ON THE DRAWINGS IS APPROXIMATE AND THEIR ACTUAL LOCATIONS MAY VERY FROM THAT SHOWN. CONTRACTOR SHALL DETERMINE THE EXACT LOCATION OF ALL UNDERGROUND FEATURES THAT MAY BE AFFECTED BY THE WORK.

18. CONTRACTOR SHALL PROTECT ALL EXISTING APPURTENANCES THAT REMAIN INCLUDING THOSE LOCATED WITHIN PAVED AREAS, WHETHER OR NOT SHOWN ON THE DRAWINGS, UNTIL READJUSTED. SUCH ITEMS INCLUDE, BUT ARE NOT LIMITED TO, VALVE CANS, ELECTRICAL MANHOLES, PULL BOXES, CATHODIC PROTECTION TEST STATIONS, MANHOLE AND CLEANOUT CASTINGS, AND SURVEY MONUMENTS.

19. CONTRACTOR SHALL NOTIFY CONSTRUCTION MANAGER WHERE THE WORK MIGHT CAUSE SURVEY MONUMENTS TO BECOME DISTURBED OR DESTROYED. CONTRACTOR SHALL PROVIDE A LICENSED LAND SURVEYOR TO SET REFERENCES AND RESTORE SURVEY MONUMENTS IN ACCORDANCE WITH COUNTY AND CITY STANDARDS.

20. ALL AREAS DISTURBED OUTSIDE THE WORK AREA SHALL BE RESTORED TO THE PRE-DISTURBED CONDITION.

21. TYPICAL DETAILS SHALL BE USED FOR ALL PERMANENT WORK, EVEN THOUGH THEY ARE NOT CALLED OUT AT ALL LOCATIONS WHERE THEY APPLY. REFER TO TYPICAL DETAILS SHEETS.

22. REFER TO SECTION 01 12 16 FOR WORK RESTRICTIONS INCLUDING SEQUENCING REQUIREMENTS AND REQUIREMENTS TO MAINTAIN DESIGNATED FACILITIES AND UTILITIES IN SERVICE DURING CONSTRUCTION. THE CITY OF SWEET HOME WASTEWATER FACILITIES IMPROVEMENTS REQUIRES DETAILED PLANNING OF CONSTRUCTION SEQUENCING, SPECIAL COORDINATION AND COMPREHENSIVE PROGRAMMING, COMBINED WITH OTHER SPECIAL WORK ACTIVITIES. CONTRACTOR SHALL PREPARE AND SUBMIT A DETAILED WORK SEQUENCE PLAN TO THE ENGINEER FOR REVIEW AT THE PRE-CONSTRUCTION CONFERENCE.

23. CONTRACTOR SHALL COORDINATE AND NOTIFY THE CONSTRUCTION MANAGER WHEN WORK IS READY FOR INSPECTIONS. PRESENCE OR ABSENCE OF INSPECTOR WILL NOT RELIVE CONTRACTOR OF FULL RESPONSIBILITY FOR PROPER PERFORMANCE OR WORK.

24. CONTRACTOR SHALL REMOVE AND LEGALLY DISPOSE OF ALL MATERIALS THAT ARE TO BE REMOVED FROM THE SITE INCLUDING, SURPLUS EXCAVATION MATERIALS AND DEBRIS ITEMS DESIGNATED BY THE OWNER FOR SALVAGING SHALL REMAIN THE PROPERTY OF THE OWNER, AND SHALL BE CAREFULLY REMOVED AND STORED AS DIRECTED.

25. CONTRACTOR SHALL ASSUME SOLE AND COMPLETE RESPONSIBILITY FOR JOB SITE CONDITIONS AND SECURITY, INCLUDING PROTECTION OF PUBLIC AND PRIVATE PROPERTY ADJACENT TO WORK DURING THE CONSTRUCTION OF THE PROJECT.

26. CONTRACTOR SHALL BE RESPONSIBLE FOR COMPLIANCE WITH ALL CURRENTLY APPLICABLE SAFETY LAWS OF ANY JURISDICTIONAL BODY. CONTRACTOR SHALL BE RESPONSIBLE TO PROVIDE ALL BARRICADES, SAFETY DEVICES, AND CONTROL TRAFFIC WITHIN CONSTRUCTION AREAS AS REQUIRED. CONTRACTOR SHALL ALSO BE RESPONSIBLE FOR COMPLIANCE WITH ADDITIONAL PUBLIC SAFETY REQUIREMENTS WHICH MAY ARISE DURING CONSTRUCTION.

27. CONTRACTOR SHALL BE COMPLETELY RESPONSIBLE FOR PROTECTING ANY TREES NOT DESIGNATED FOR REMOVAL. ANY TREE DAMAGE SHALL BE REPLACED BY THE CONTRACTOR AS DIRECTED BY THE ENGINEER.

28. DURING CONSTRUCTION PHASE, CONTRACTOR MUST MAINTAIN SEWER, POWER AND WATER SERVICES FOR THE WWTP OPERATION.

29. IT SHALL BE THE CONTRACTOR'S RESPONSIBILITY TO INSPECT THE NATURE AND CONDITION OF ALL FACILITIES TO BE DEMOLISHED, MODIFIED OR ALTERED PRIOR TO SUBMITTAL OF BID. INSPECTION SHALL TAKE PLACE DURING PRE-BID VISIT TO SITE CONDUCTED BY OWNER.

30. CONTRACTOR SHALL PROTECT FROM DAMAGE ANY EXTERIOR PLANTINGS, STRUCTURES AND EQUIPMENT NOT SUBJECT TO REMOVAL.

31. CONTRACTOR IS REQUIRED TO COORDINATE ALL DEMOLITION WORK WITH THE OPERATION OF THE WWTP. CONTRACTOR IS RESPONSIBLE FOR ALL COSTS ASSOCIATED WITH COORDINATION.

32. SITE PREPARATION, DEMOLITION AND REMOVAL SHALL BE PERFORMED IN ACCORDANCE WITH THE SPECIFICATIONS AND AS APPROVED BY THE CM.

33. UTILITIES OR INTERFERING PORTIONS OF UTILITIES THAT ARE ABANDONED IN PLACE SHALL BE REMOVED BY THE CONTRACTOR TO THE EXTENT NECESSARY TO ACCOMPLISH THE WORK. IDENTIFY LENGTHS AND ELEVATIONS OF ABANDONED PIPING THAT ARE NOT REMOVED FOR RECORD DRAWING PURPOSES. ALL PIPELINES SHALL BE REMOVED OR PLUGGED.

34. DEMO WORK TO INCLUDE REMOVAL AND OFFSITE DISPOSAL OF ALL ASPHALT CONCRETE, CONCRETE, PIPING, EQUIPMENT AND OTHER NON-NATIVE MATERIALS AND SELECT VEGETATION TO THE DEPTH OF EXCAVATION REQUIRED FOR CONSTRUCTION OF THIS PROJECT.

PIPELINE NOTES

1. ALL SEWAGE FORCE MAIN JOINTS SHALL BE RESTRAINED. RESTRAIN ALL VALVES, TEES, BENDS, AND FITTINGS WITH MECHANICAL JOINT RESTRAINTS AND INSTALL CONCRETE THRUST BLOCKS WHERE SHOWN. ALL FITTINGS TO BE MECHANICAL JOINT UNLESS OTHERWISE NOTED.

2. CONTRACTOR TO PROVIDE "AS CONSTRUCTED" DRAWINGS INDICATING FINAL LOCATION AND ELEVATION, GRADE, ALIGNMENT, FITTINGS AND MATERIALS INSTALLED AND ALL OTHER UTILITIES OR OBSTACLES SHOWN ON THESE PLANS AND SHALL BE UPDATED CONTINUOUSLY THROUGHOUT CONSTRUCTION. AS CONSTRUCTED DRAWINGS SHALL BE "RED LINES" OF THE DESIGN DRAWINGS.

3. AT THE END OF EACH WORKDAY, ALL OPEN TRENCHES SHALL BE BACKFILLED OR COVERED AND SECURED WITH PINNED PLATES. ALL TRENCHES IN TRAFFIC AREAS SHALL BE PAVED WITH TEMPORARY HOT MIX ASPHALT.

4. CONTRACTOR SHALL COMPLY WITH ALL OREGON DEPARTMENT OF ENVIRONMENTAL QUALITY (DEQ) REQUIREMENTS IN THE DISPOSAL OF CHLORINATED WATER. SEE SPECIFICATIONS.

5. SEE SPECIFICATION SECTION 01 12 16 WORK SEQUENCE FOR PROJECT SPECIFIC WORK CONSTRAINTS.

6. CONTRACTOR SHALL RESTORE ALL EXISTING FEATURES, INCLUDING BUT NOT LIMITED TO, ROADWAYS, STRUCTURES, CURBS, SIDEWALKS, FENCES, WALLS, PLANTINGS, MAILBOXES, SIGNS, PIPING, AND UTILITIES DISTURBED DURING CONSTRUCTION TO EXISTING CONDITIONS UNLESS OTHERWISE SPECIFIED. SUCH RESTORATION WILL BE CONSIDERED INCIDENTAL.

7. ALL SURVEY AND STAKING NECESSARY FOR CONSTRUCTION SHALL BE PROVIDED BY THE CONTRACTOR. THE CONTRACTOR SHALL DEVELOP AND MAKE ALL DETAIL SURVEYS NECESSARY TO ESTABLISH PRINCIPAL LINES AND GRADES. SURVEY CONTROL BENCHMARKS ARE PROVIDED ON SHT C-010.

8. PROTECT FRESHLY POURED CONCRETE FROM VANDALISM OR OTHER DAMAGE FOR A MINIMUM OF TWENTY-FOUR (24) HOURS OR UNTIL CURED ENOUGH TO SUPPORT TYPICAL USE, WHICHEVER IS LONGER. ANY CONCRETE DAMAGED BY VANDALISM OR OTHER CAUSES SHALL BE REPLACED AT NO COST TO THE CITY.

NO.	DATE	BY	REVISION

NOTICE
0 ½ 1
IF THIS BAR DOES NOT MEASURE 1" THEN DRAWING IS NOT TO SCALE

WJS DESIGNED
SMB DRAWN
PLVM CHECKED

REGISTERED PROFESSIONAL ENGINEER
51615PE
OREGON
JAN. 02, 1999
PRESTON VAN METER
EXPIRES : 6/30/2024
DocuSigned by: 4B04E76859FC46B...
8/2/2022

WEST YOST
Water. Engineered.

Sweet Home Oregon at its best!

MAHLER WATER RECLAMATION FACILITY IMPREVENTS PROJECT PHASE 1

GENERAL & CIVIL NOTES

PROJECT NO.: 19-2605	SCALE: NO SCALE	DATE: August 2022

SHEET G-002

3 of 135

C:\Users\sbarber\ACCDocs\Cadworks Inc\Sweet Home WWTP\Project Files\Active Design - CAD\2D Design\01_General\19-2605-OR-G.dwg G-002 7/26/2022 9:38 AM SBARBER 23.1s (LMS Tech)

DocuSign Envelope ID: 09934EE9-0C55-40A3-8631-9C0AF6797111

PIPE & FITTING SYMBOLS

PLANT	SCHEMATIC	
		WELDED JOINT
		FLANGED JOINT
		GROOVED END JOINT
		MECHANICAL JOINT
		PUSH-ON JOINT (RUBBER GASKET)
		FLANGED COUPLING ADAPTER
		DOUBLE BALL FLEXIBLE EXTENSION COUPLING
		FLEXIBLE COUPLING W/ THRUST RING
		90° BEND UP
		90° BEND DOWN
		TEE UP
		TEE DOWN
		LATERAL UP
		LATERAL DOWN
		CONCENTRIC REDUCER
		ECCENTRIC REDUCER
		UNION
		BLIND FLANGE
		CAP
		LONG SLEEVE
		FLEXIBLE COUPLING
		FITTING (45°)

VALVE SYMBOLS

PLANT	SCHEMATIC		
		BUTTERFLY VALVE	V-100+
		BALL VALVE	V-200+
		PLUG VALVE (TOP)	V-300+
		3-WAY PLUG VALVE	V-300+
		CHECK VALVE	V-400+
		DOUBLE CHECK ASSEMBLY	V-400+
		BALL SWING CHECK	V-400+
		REDUCED PRESSURE BACKFLOW PREVENTER W/ GATE VALVES	V-400+
		GATE VALVE	V-500+
		NEEDLE VALVE	V-600+
		GLOBE VALVE	V-700+
		HOSE VALVE	V-700+
		RELIEF VALVE	V-800+
		PRESSURE REDUCING VALVE	V-800+
		SOLENOID VALVE	V-900+
		HOSE BIBB	

EXAMPLE PIPE CALL OUT

PIPE SIZE — FLOW STREAM

8"-LPA

EXAMPLE VALVE CALL OUT

VALVE SIZE — VALVE NUMBER

8" V-100

TOPOGRAPHIC LEGEND

	EXISTING	PROPOSED
WATERLINE	10"W	12"DI W
ELECTRICITY UNDERGROUND	E	E
ELECTRICITY OVERHEAD	OVHD	
GAS	4"G	4"G
TELEPHONE/TELEMETRY	T	T
CABLE TELEVISION	CATV	CATV
SANITARY SEWER LINE	8"SS	8"SS
SANITARY SEWER FORCE MAIN	6"FM	6"FM
STORM DRAIN	8"SD	8"SD
CULVERT		18"D
ABANDON PIPE		
REMOVE PIPE/ STRUCTURE		
DRAINAGE DITCH		
CHAIN LINK FENCE		
TEMPORARY SILT FENCE		
GUARDRAIL		
ROCK WALL		
TREE/BUSH LINE		
CENTERLINE		
EASEMENT/PROPERTY LINE		
RIGHT-OF-WAY		
EDGE OF PAVEMENT/AC		
EDGE OF GRAVEL		
CURB		
SIDEWALK	S/W	
STRUCTURE OR FACILITY		
CONTOUR MINOR		
CONTOUR MAJOR	200	200
MANHOLE		
CLEAN-OUT		
CATCH BASIN/FIELD INLET		
THRUST BLOCK		
VALVE		
AIR RELEASE ASSEMBLY		
FIRE HYDRANT ASSEMBLY		
WATER METER		
PULL BOX/JUNCTION BOX		
UTILITY POLE		
GUY WIRE		
LIGHT POST		
MAILBOX		
SIGN		
BENCHMARK		
TREE DECIDUOUS		
TREE CONIFEROUS		
TREE TO BE REMOVED		
SURFACE ELEVATION	+ 176.63	+ 176.63

SECTION AND DETAIL DESIGNATIONS

SECTION DESIGNATIONS

1 — SECTION LETTER DESIGNATION

2 — SHEET WHERE SECTION IS SHOWN *

SECTION
SCALE:

A — SECTION LETTER DESIGNATION

1 — SHEET FROM WHICH SECTION IS TAKEN *

DETAIL DESIGNATIONS

DETAIL
SCALE:

2 — DETAIL NUMBER

2 — SHEET FROM WHICH DETAIL IS TAKEN *

DETAIL CALL OUT

** DETAIL NUMBER — C010

STANDARD DETAIL CALL OUT

* NOTE: IF PLAN AND SECTION FOR DETAIL CALL-OUT AND DETAIL ARE SHOWN ON THE SAME DRAWING, DRAWING NUMBER IS REPLACED WITH A DASH.
**STANDARD DETAILS ARE ON DETAIL SHEETS

FLOW STREAM ABBREVIATIONS

DR	DRAIN (PROCESS)	PSC	PRIMARY SCUM
FM	INFLUENT PUMP STATION FORCEMAIN	SD	STORM DRAIN
INF	INFLUENT PUMP STATION DISCHARGE	SL-D	DIGESTED SLUDGE
INF	INFLUENT PUMP STATION INLET	SL-WAS	WAS SLUDGE
PFD	PERFORATED DRAIN	SS	SANITARY SEWER
PS	PRIMARY SLUDGE	W	POTABLE WATER

NO.	DATE	BY	REVISION

NOTICE
0 ½ 1
IF THIS BAR DOES NOT MEASURE 1" THEN DRAWING IS NOT TO SCALE

WJS DESIGNED
SMB DRAWN
PLVM CHECKED

REGISTERED PROFESSIONAL ENGINEER — DocuSigned by: 5164F9E — PRESTON VAN METER — MAY 02, 1999 — 8/12/2022 — EXPIRES : 6/30/2024

WEST YOST
Water. Engineered.

Sweet Home Oregon at its best!

MAHLER WATER RECLAMATION FACILITY IMPROVEMENTS PROJECT PHASE 1

GENERAL & CIVIL SYMBOLS

PROJECT NO.: 19-2605 | SCALE: NO SCALE | DATE: August 2022

SHEET G-003

C:\Users\sbarber\ACCDocs\Cadworks Inc\Sweet Home WWTP\Project Files\Active Design - CAD\2D Design\01_General\19-2605-OR-G.dwg G-003 7/26/2022 9:38 AM SBARBER 23.1s (LMS Tech)

DocuSign Envelope ID: 09934EE9-0C55-40A3-8631-9C0AF6797111

C:\Users\sbarber\ACCDocs\Cadworks Inc\Sweet Home WWTP\Project Files\Active Design - CAD\2D Design\01_General\19-2605-OR-G.dwg G-004 7/29/2022 11:18 AM SBARBER 23.1s (LMS Tech)

@	AT
AASHTO	AMERICAN ASSOCIATION OF STATE HIGHWAY & TRANSPORTATION OFFICIALS
AB	ANCHOR BOLT
ABE	AERATION BASIN EFFLUENT
ABI	AERATION BASIN INFLUENT
ABD	ABANDON(ED)
ABS	ACRYLONITRILE BUTADIENE STYRENE
ABV	ABOVE / ALCOHOL BY VOLUME
AC	ASPHALTIC CONCRETE
ACP	ASPHALTIC CONCRETE PAVING
ADJ	ADJUSTABLE
ADJC	ADJACENT
AFF	ABOVE FINISHED FLOOR
AFG	ABOVE FINISHED GRADE
AHR	ANCHOR
AL	ALUMINUM
ALT	ALTERNATE
AMP	AMPERE
ANSI	AMERICAN NATIONAL STANDARDS INSTITUTE
APPROX	APPROXIMATE
APPVD	APPROVED
APWA	AMERICAN PUBLIC WORKS ASSOCIATION
ARCH	ARCHITECTURAL
ARV	AIR RELEASE VALVE
ASCE	AMERICAN SOCIETY OF CIVIL ENGINEERS
ASSN	ASSOCIATION
ASSY	ASSEMBLY
ASTM	AMERICAN SOCIETY FOR TESTING & MATERIALS
ATM	ATMOSPHERE
AUTO	AUTOMATIC
AUX	AUXILIARY
AVE	AVENUE
AVG	AVERAGE
AWWA	AMERICAN WATER WORKS ASSOCIATION
B&S	BELL & SPIGOT
BC	BOLT CIRCLE
BF	BOTH FACE
BFD	BACKFLOW PREVENTION DEVICE
BFILL	BACKFILL
BFV	BUTTERFLY VALVE
BHP	BRAKE HORSEPOWER
BKGD	BACKGROUND
BLDG	BUILDING
BLVD	BOULEVARD
BM	BENCHMARK / BEAM
BMP	BEST MANAGEMENT PRACTICES
BO	BLOW-OFF
BOC	BACK OF CURB
BS	BOTH SIDES
BSMT	BASEMENT
BTF	BOTTOM FACE
BTU	BRITISH THERMAL UNIT
BV	BALL VALVE
BW	BOTH WAYS
C	CELSIUS
C TO C	CENTER TO CENTER
CAK	BIOSOLIDS CAKE
CARV	COMBINATION AIR RELEASE VALVE
CAS	CAUSTIC SODA
CATV	CABLE TELEVISION
CB	CATCH BASIN
CCP	CONCRETE CYLINDER PIPE
CCW	COUNTER CLOCKWISE
CFM	CUBIC FEET PER MINUTE
CFS	CUBIC FEET PER SECOND
CHAN	CHANNEL
CHEM	CHEMICAL
CHFR	CHAMFER
CHKV	CHECK VALVE
CI	CAST IRON
CIP	CAST IRON PIPE
CIPC	CAST IN PLACE CONCRETE
CISP	CAST IRON SOIL PIPE
CJ	CONSTRUCTION JOINT
CL OR C/L	CENTER LINE
CL2	CHLORINE
CLG	CEILING
CLJ	CONTROL JOINT
CLR	CLEAR
CLSM	CONTROLLED LOW STRENGTH MATERIAL
CMP	CORRUGATED METAL PIPE
CMU	CONCRETE MASONRY UNIT
CND	CONDUIT
CNT	CONTROL POINT
CO	CLEANOUT
COL	COLUMN
COMB	COMBINATION
CONC	CONCRETE
CONN	CONNECTION
CONST	CONSTRUCTION
CONT	CONTINUOUS / CONTINUATION
CONTR	CONTRACT(OR)
COORD	COORDINATE
COP	COPPER
CORP	CORPORATION
CORR	CORRUGATED
CP	CONTROL POINT
CPLG	COUPLING
CPVC	CHLORINATED POLYVINYL CHLORIDE
CR	CRUSHED ROCK
CS	COMBINED SLUDGE
CSP	CONCRETE SEWER PIPE
CT	COURT
CTR	CENTER
CU	CUBIC
CULV	CULVERT
CV	CONTROL VALVE
CW	CLOCKWISE / COLD WATER
CY	CUBIC YARDS
CYL	CYLINDER LOCK
DC	DIRECT CURRENT
DEFL	DEFLECTION
DEG	DEGREE
DET	DETAIL
DI	DUCTILE IRON
DIA	DIAMETER
DIM	DIMENSION
DIPS	DUCTILE IRON PIPE SIZE
DIR	DIRECTION
DIST	DISTANCE
DN	DOWN
DR	DRAIN
DS	DIGESTER SLUDGE
DWG	DRAWING
DWL	DOWEL
DWV	DRAIN WASTE AND VENT
DWY	DRIVEWAY
E OR ELEC	ELECTRICAL
EA	EACH
ECC	ECCENTRIC
EF	EACH FACE
EFF	EFFLUENT
EL	ELEVATION
ELB	ELBOW
ENCL	ENCLOSURE
EOP	EDGE OF PAVEMENT
EP	EDGE OF PAVEMENT
EQ	EQUAL
EQL SP	EQUALLY SPACED
EQUIP	EQUIPMENT
ESMT	EASEMENT
EW	EACH WAY
EXC	EXCAVATE
(E), EXIST	EXISTING
EXP	EXPANSION
EXP BT	EXPANSION BOLT
EXP JT	EXPANSION JOINT
EXT	EXTERIOR
F	FAHRENHEIT
F TO F	FACE TO FACE
FAB	FABRICATE
FB	FLAT BAR
FCA	FLANGED COUPLING ADAPTER
FCO	FLOOR CLEANOUT
FD	FLOOR DRAIN
FDN	FOUNDATION
FE	FINAL EFFLUENT
FEXT	FIRE EXTINGUISHER
FF	FAR FACE
FG	FINISH GRADE
FGL	FIBERGLASS
FH	FIRE HYDRANT
FIN	FINISH(ED)
FIPT	FEMALE IRON PIPE THREAD
FITG	FITTING
FL	FLOOR LINE
FLEX	FLEXIBLE
FLG	FLANGE
FLL	FLOW LINE
FLR	FLOOR
FM	FORCE MAIN
FO	FIBER OPTIC
FOC	FACE OF CONCRETE
FOF	FACE OF FINISH
FOM	FACE OF MASONRY
FOS	FACE OF STUDS
FPM	FEET PER MINUTE
FPS	FEET PER SECOND
FRP	FIBERGLASS REINFORCED PLASTIC
FT	FEET / FOOT
FTG	FOOTING
FUT	FUTURE
FXTR	FIXTURE
G	GAS
GA	GAUGE
GAL	GALLON
GALV	GALVANIZED
GC	GROOVED COUPLING
GEN	GENERATOR
GFA	GROOVED FLANGE ADAPTER
GI	GALVANIZED IRON
GIP	GALVANIZED IRON PIPE
GJ	GRIP JOINT
GL	GLASS
GLV	GLOBE VALVE
GND	GROUND
GPD	GALLONS PER DAY
GPH	GALLONS PER HOUR
GPM	GALLONS PER MINUTE
GPS	GALLONS PER SECOND, GLOBAL POSITIONING SYSTEM
GR	GRIT
GR LN	GRADE LINE
GRTG	GRATING
GV	GATE VALVE
GRVL	GRAVEL
GYP	GYPSUM
HB	HOSE BIBB
HC	HOLLOW CORE
HDPE	HIGH DENSITY POLYETHYLENE
HDR	HEADER
HDWE	HARDWARE
HGR	HANGER
HGT	HEIGHT
HH	HANDHOLD
HM	HOLLOW METAL
HMAC	HOT MIX ASPHALT CONCRETE
HNDRL	HANDRAIL
HOA	HAND-OFF-AUTO
HOR	HAND-OFF-REMOTE / HORIZONTAL
HP	HIGH PRESSURE / HORSEPOWER
HPG	HIGH PRESSURE GAS
HPT	HIGH POINT
HR	HOUR
HSB	HIGH STRENGTH BOLT
H/T	HUB AND TACK
HV	HOSE VALVE
HVAC	HEATING, VENTILATION, AIR CONDITIONING
HW	HOT WATER
HWL	HIGH WATER LINE
HWY	HIGHWAY
HYD	HYDRANT
HYDR	HYDRAULIC
I&C	INSTRUMENTATION & CONTROL
ID	INSIDE DIAMETER
IE	INVERT ELEVATION
IF	INSIDE FACE
IMPVT	IMPROVEMENT
IN	INCH
INCC	INCLUDE(D)(ING)
INFL	INFLUENT
INJ	INJECTION
INSTL	INSTALLATION / INSTALL
INSUL	INSULATION
INTER	INTERCEPTOR
INTR	INTERIOR
INV	INVERT
IP	IRON PIPE
IPS	INFLUENT PUMP STATION
IPT	IRON PIPE THREAD
IR	IRON ROD
IRRIG	IRRIGATION
JT	JOINT
JUNC	JUNCTION
KPL	KICK PLATE
KVA	KILOVOLT AMPERE
KW	KILOWATT
KWY	KEYWAY
L	LENGTH
LAB	LABORATORY
LAV	LAVATORY
LB	POUND
LF	LINEAR FOOT
LIN	LINEAL
LOC	LOCATION
LONG	LONGITUDINAL
LP	LOW PRESSURE
LPT	LOW POINT
LRG	LARGE
LS	LONG SLEEVE / LUMP SUM
LT	LEFT
LVL	LEVEL
LWL	LOW WATER LINE
MAN	MANUAL
MAT	MATERIAL
MAX	MAXIMUM
MCC	MOTOR CONTROL CENTER
MCP	MASTER CONTROL PANEL
MEB	MAIN ELECTRICAL & BLOWER BUILDING
MECH	MECHANICAL
MET	METAL
MFR	MANUFACTURER
MGD	MILLION GALLONS PER DAY
MH	MANHOLE
MIN	MINIMUM
MIPT	MALE IRON PIPE THREAD
MISC	MISCELLANEOUS
MJ	MECHANICAL JOINT
MON	MONUMENT / MONOLITHIC
MOT	MOTOR
MP	MILEPOST
MSL	MEAN SEAL LEVEL
MTD	MOUNTED
NA	NOT APPLICABLE
NAV88	NORTH AMERICAN VERTICAL DATUM OF 1988
NC	NORMALLY CLOSED
NF	NEAR FACE
NIC	NOT IN CONTRACT
NO / NO.	NORMALLY OPEN / NUMBER
NOM	NOMINAL
NORM	NORMAL
NRS	NON-RISING STEM
NTS	NOT TO SCALE
O TO O	OUT TO OUT
OC	ON CENTER
OD	OUTSIDE DIAMETER
ODOT	OREGON DEPARTMENT OF TRANSPORTATION
OF	OVERFLOW / OUTSIDE FACE
OPNG	OPENING
OPP	OPPOSITE
ORIG	ORIGINAL
OVHD	OVERHEAD
(P)	PROPOSED / NEW
P&ID	PROCESS & INSTRUMENTATION DIAGRAM
PA	PROCESS AIR
PC	POINT OF CURVE
PCC	POINT OF COMPOUND CURVE
PCVC	POINT OF CURVATURE ON VERTICAL CURVE
PE	PRIMARY EFFLUENT
PERF	PERFORATED
PERM	PERMANENT
PERP	PERPENDICULAR
PEX	CROSS-LINKED POLYETHYLENE
PG	PRESSURE GAUGE
PH	PIPE HANGER
PI	PRIMARY INFLUENT
PIVC	POINT OF INTERSECTION ON VERTICAL CURVE
PK	SURVEY "PK" NAIL
PL OR P/L	PROPERTY LINE / PLATE / PLASTIC
PLBG	PLUMBING
PLE	PLANE END
PNL	PANEL
POC	POINT OF CURVATURE
POL	POLYMER
POLY	POLYETHYLENE
PP	POWER POLE
PRC	POINT OF REVERSE CURVATURE
PRCST	PRECAST
PREP	PREPARATION
PRESS	PRESSURE
PRKG	PARKING
PROP	PROPERTY
PRV	PRESSURE REDUCING VALVE
PS	PUMP STATION/PRIMARY SLUDGE
PSC	PRIMARY SCUM
PSIG	POUNDS PER SQUARE INCH GAUGE
PSL	PIPE SLEEVE
PSPT	PIPE SUPPORT
PV	PLUG VALVE
PVC	POLYVINYL CHLORIDE
PVMT	PAVEMENT
PWR	POWER
QTY	QUANTITY
R, RAD	RADIUS
RAS	RETURN ACTIVATED SLUDGE
RC	REINFORCED CONCRETE
RCP	REINFORCED CONCRETE PIPE
RD	ROAD / ROOF DRAIN
RDCR	REDUCER
RDPS	RECYCLE DRAIN PUMP STATION
REF	REFERENCE
REINF	REINFORCE(D)(ING)(MENT)
REQ'D	REQUIRED
RESTR	RESTRAINED
RFCA	RESTRAINED FLANGE COUPLING ADAPTER
RM	ROOM
RND	ROUND
RO	ROUGH OPENING
R/W	RIGHT-OF-WAY
RPBPD	REDUCED PRESSURE BACKFLOW PREVENTION DEVICE
RPC	RED PLASTIC CAP
RPM	REVOLUTIONS PER MINUTE
RR	RAILROAD
RS	RAW SEWAGE
RST	REINFORCED STEEL
RT	RIGHT
S	SLOPE
SALV	SALVAGE
SAN	SANITARY
SC	SOLID CORE
SCE	SECONDARY CLARIFIER EFFLUENT
SCH	SCHEDULE
SCM	SCUM
SCRN	SCREENINGS
SD	STORM DRAIN
SDI	STORM DRAIN INLET
SDL	SADDLE
SDLAT	STORM DRAIN LATERAL
SDR	STANDARD DIMENSION RATIO
SECT	SECTION
SHLDR	SHOULDER
SHT	SHEET
SIM	SIMILAR
SL	SLUDGE
SLD	DIGESTED SLUDGE
SLP	SLOPE
SLV	SLEEVE
SOLN	SOLUTION
SP	SOIL PIPE / SEWER PIPE
SPCL	SPECIAL
SPEC(S)	SPECIFICATION(S)
SPG	SPACING
SPL	SPOOL
SPRT	SUPPORT
SQ	SQUARE
SQ FT	SQUARE FOOT
SQ IN	SQUARE INCH
SQ YD	SQUARE YARD
SS	SANITARY SEWER
SSCO	SANITARY SEWER CLEANOUT
SST	STAINLESS STEEL
ST	STREET
STA	STATION
STD	STANDARD
STL	STEEL
STOR	STORAGE
STR	STRAIGHT
STRUCT	STRUCTURE / STRUCTURAL
SUBMG	SUBMERGED
SUCT	SUCTION
SV	SOLENOID VALVE
S/W	SIDEWALK
SWD	SIDEWATER DEPTH
SWGR	SWITCH GEAR
SYMM	SYMMETRICAL
SYS	SYSTEM
T OR TEL	TELEPHONE
T&B	TOP & BOTTOM
TAN	TANGENCY
TB	THRUST BLOCK
TBM	TEMPORARY BENCHMARK
TC	TOP OF CONCRETE / TOP OF CURB
TCE	TEMPORARY CONSTRUCTION EASEMENT
TDH	TOTAL DYNAMIC HEAD
TEMP	TEMPERATURE / TEMPORARY
T&G	TONGUE & GROOVE
THK	THICK / THICKNESS
THRD	THREAD (ED)
THRU	THROUGH
TP	TEST PIT / TOP OF PAVEMENT / TURNING POINT
TRANS	TRANSITION
TSP	TRI-SODIUM PHOSPHATE
TST	TOP OF STEEL
TW	TOP OF WALL
TWAS	THICKENED WASTE ACTIVATED SLUDGE
TYP	TYPICAL
UG	UNDERGROUND
UH	UNIT HEATER
UN	UNION
UNO	UNLESS NOTED OTHERWISE
USGS	UNITED STATES GEOLOGIC SURVEY
UW	UTILITY WATER
V	VENT / VOLT
VAC	VACUUM
VB	VACUUM BREAKER
VBOX	VALVE BOX
VC	VERTICAL CURVE
VERT	VERTICAL
VFD	VARIABLE FREQUENCY DRIVE
VOL	VOLUME
VCP	VITRIFIED CLAY PIPE
VTR	VENT THROUGH ROOF
W1	POTABLE WATER
W2	NON-POTABLE WATER
W/	WITH
W/IN	WITHIN
W/O	WITHOUT
W/W	WALL TO WALL
WAS	WASTE ACTIVATED SLUDGE
WD	WOOD
WF	WIDE FLANGE
WH	WATER HEATER
WI	WROUGHT IRON
WM	WATER METER
WP	WORKING POINT / WATERPROOFING
WS	WATER SERVICE
WSDOT	WASHINGTON STATE DEPARTMENT OF TRANSPORTATION
WT	WEIGHT
WTP	WATER TREATMENT PLANT
WTR	WATER
WTRT	WATERTIGHT
WWF	WELDED WIRE FABRIC
WWTF	WASTEWATER TREATMENT FACILITY
WWTP	WASTEWATER TREATMENT PLANT
X SECT	CROSS SECTION
XFMR	TRANSFORMER
YD	YARD DRAIN / YARD
YH	YARD HYDRANT
YR	YEAR
ZN	ZINC

NO.	DATE	BY	REVISION

NOTICE
0 ½ 1
IF THIS BAR DOES NOT MEASURE 1" THEN DRAWING IS NOT TO SCALE

WJS DESIGNED
SMB DRAWN
PLVM CHECKED

REGISTERED PROFESSIONAL ENGINEER
51615PE
OREGON
JAN. 02, 1999
PRESTON VAN METER
DocuSigned by:
4B04F76859FC46F...
8/2/2022
EXPIRES : 6/30/2024

WEST YOST
Water. Engineered.

Sweet Home
Oregon at its best!

MAHLER WATER RECLAMATION FACILITY IMPROVEMENTS PROJECT PHASE 1

GENERAL & CIVIL ABBREVIATIONS

PROJECT NO.: 19-2605 | SCALE: NO SCALE | DATE: August 2022

SHEET
G-004
5 of 135

DocuSign Envelope ID: 09934EE9-0C55-40A3-8631-9C0AF6797111

C:\Users\sbarber\ACCDocs\Cadworks Inc\Sweet Home WWTP\Project Files\Active Design - CAD\2D Design\01_General\19-2605-OR-G.dwg G-005 7/26/2022 9:38 AM SBARBER 23.1s (LMS Tech)

POPULATION	CURRENT	YEAR 2045
	9,820	11,643

INFLUENT FLOWS

AVERAGE DRY WEATHER FLOW (ADWF)	0.9 MGD	1.1 MGD
ANNUAL AVERAGE FLOW (AAF)	1.5 MGD	1.9 MGD
AVERAGE WET WEATHER FLOW (AWWF)	2.2 MGD	2.6 MGD
MAX MONTH DRY WEATHER FLOW (MMDWF)	2.6 MGD	3.1 MGD
MAX MONTH WET WEATHER FLOW (MMWWF)	3.6 MGD	4.3 MGD
MAX DAY WET WEATHER FLOW (MDWWF)	7.8 MGD	9.4 MGD
PEAK INSTANTANEOUS FLOW (PIF)	11.8 MGD	12.4 MGD

INFLUENT LOADS

	CURRENT	YEAR 2045
cBOD		
ANNUAL AVERAGE	1,200 LB/DAY	1,400 LB/DAY
MAX MONTH DRY	1,700 LB/DAY	2,000 LB/DAY
MAX MONTH WET	1,800 LB/DAY	2,100 LB/DAY
TSS		
ANNUAL AVERAGE	1,700 LB/DAY	2,000 LB/DAY
MAX MONTH DRY	2,600 LB/DAY	3,000 LB/DAY
MAX MONTH WET	2,900 LB/DAY	3,400 LB/DAY

NPDES PERMIT LIMITS

	AVERAGE EFFLUENT MONTHLY mg/L	MONTHLY LB/D	WEEKLY mg/L	WEEKLY LB/D	MAX DAILY mg/L	MAX DAILY LB/D
MAY 1 - OCT 31						
CBOD5 <	10	120	15	180		240
TSS <	10	120	15	180		240
TOTAL AMMONIA-NITROGEN <	5.1				11	
pH	6.3-9				6.3-9	
NOV 1 - APRIL 30						
CBOD5 <	15	290	23	460		630
TSS <	20	350	30	520		690
TOTAL AMMONIA-NITROGEN <	5.1				11	
pH	6.3-9				6.3-9	

INFLUENT PUMP STATION

HIGH FLOW	
PUMP TYPE	SUBMERSIBLE
CONTROL	VFD
NUMBER	3
HP (EACH)	75
DESIGN POINT (ONE PUMP)	6.8 MGD (4,700 GPM) @ 40' TDH
DESIGN POINT (TWO PUMPS)	12.4 MGD (8,757 GPM) @ 48' TDH
LOW FLOW	
PUMP TYPE	SUBMERSIBLE
CONTROL	VFD
NUMBER	2
HP (EACH)	25
DESIGN POINT (ONE PUMP)	1.8 MGD (1,250 GPM) @ 42.5' TDH
DESIGN POINT (TWO PUMPS)	2.9 MGD (2,000 GPM) @ 50 TDH
MIN SYSTEM CAPACITY	0.50 MGD (350 GPM)
FIRM SYSTEM CAPACITY (W/ LARGEST PUMP OUT OF SERVICE)	15.3 MGD (10,600 GPM)
COMBINED FORCE MAIN VELOCITY	
CURRENT AAF (12" FM)	3.43 FT/SEC
2045 AAF (12" FM)	4.35 FT/SEC
2045 PIF (24" FM)	7.44 FT/SEC
INFLUENT FLOW METER	
TYPE	MAGNETIC FLOW METER
NUMBER	2
SIZE	24, 8 INCH

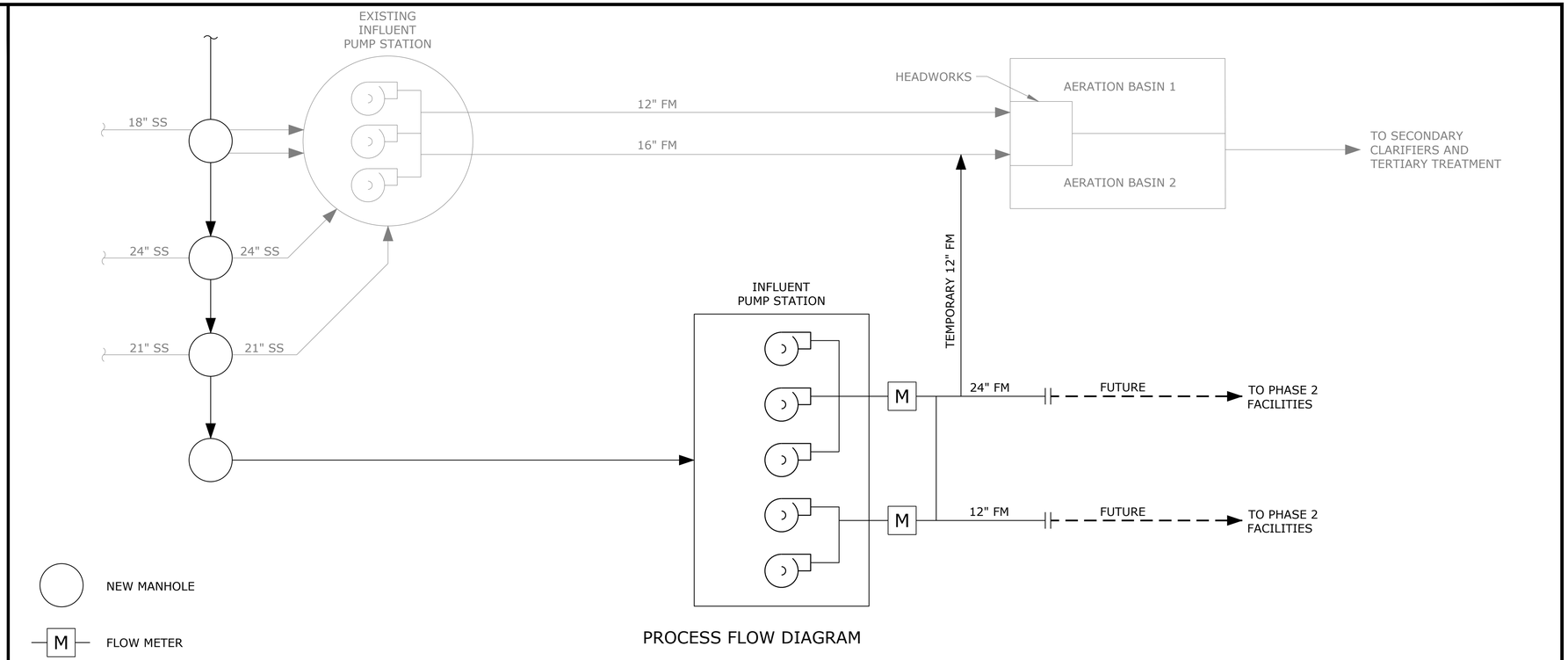

PROCESS FLOW DIAGRAM

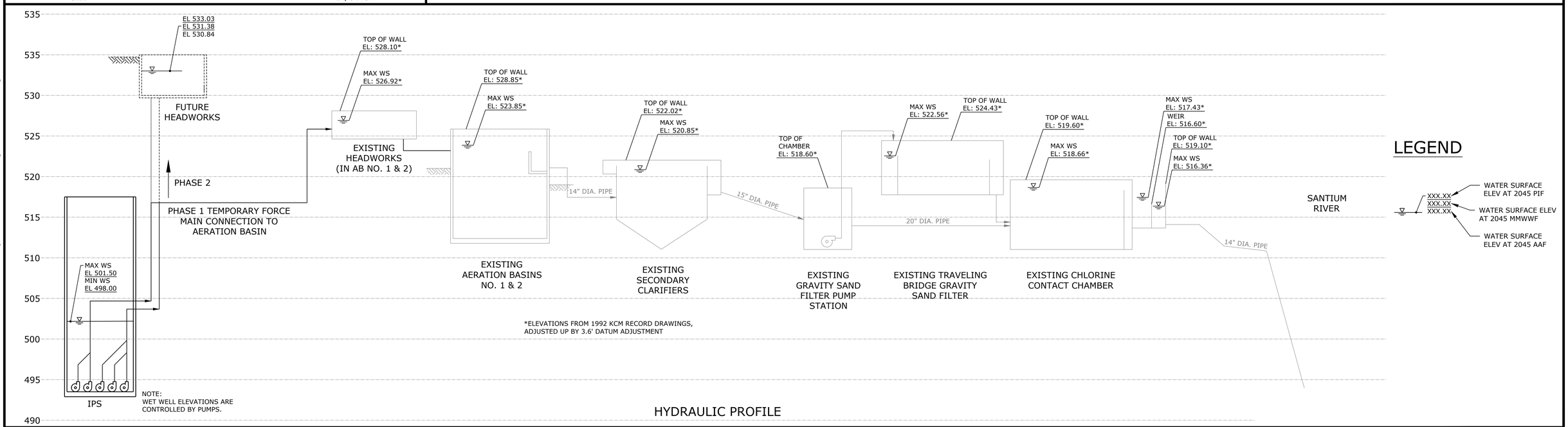

HYDRAULIC PROFILE

NO.	DATE	BY	REVISION

NOTICE

0 ½ 1

IF THIS BAR DOES NOT MEASURE 1" THEN DRAWING IS NOT TO SCALE

WJS DESIGNED
SMB DRAWN
PLVM CHECKED

REGISTERED PROFESSIONAL ENGINEER — DocuSigned by: 5161EF2FA1 — 8/2/2022 — OREGON JAN. 02, 1998 — PRESTON VAN METER
EXPIRES : 6/30/2024

WEST YOST
Water. Engineered.

Sweet Home Oregon at its best!

MAHLER WATER RECLAMATION FACILITY IMPROVEMENTS PROJECT PHASE 1

DESIGN CRITERIA, PROCESS FLOW DIAGRAM & HYDRAULIC PROFILE

PROJECT NO.: 19-2605 | SCALE: NO SCALE | DATE: August 2022

SHEET G-005

DocuSign Envelope ID: 09934EE9-0C55-40A3-8631-9C0AF6797111

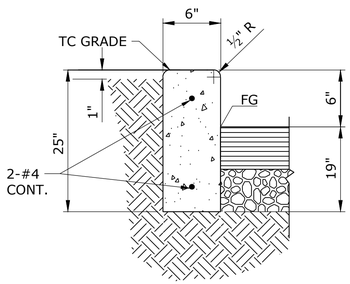

VERTICAL 6" CURB (1 / -)

SCALE: NTS

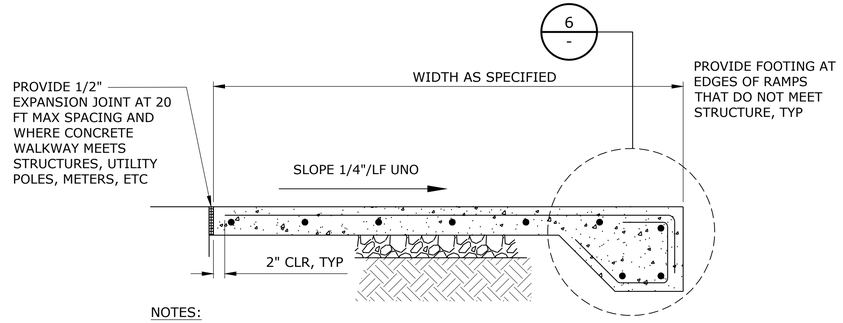

NOTES:

1. APPLY STEEL TROWEL SURFACE, THEN A LIGHT HAIRBROOM FINISH TO PRODUCE A PROFILE THAT IS PARALLEL TO THE SLAB DRAINAGE.
2. PROVIDE TOOLED JOINTS AT 5 FOOT CENTERS IN PERPENDICULAR DIRECTIONS.
3. PROVIDE 12" GRANULAR FILL UNDER CONCRETE PAVEMENT AND RAMPS.
4. #5 @ 8" OC EW AT MID-DEPTH AT CONCRETE PAVEMENT AND RAMPS.

CONCRETE SIDEWALK AND RAMP (5 / -)

SCALE: NTS

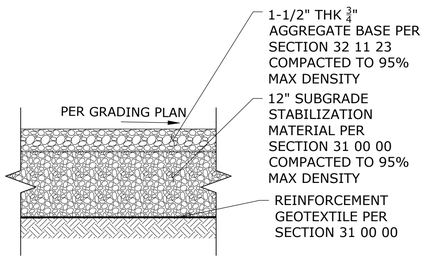

GRAVEL SECTION (2 / -)

SCALE: NTS

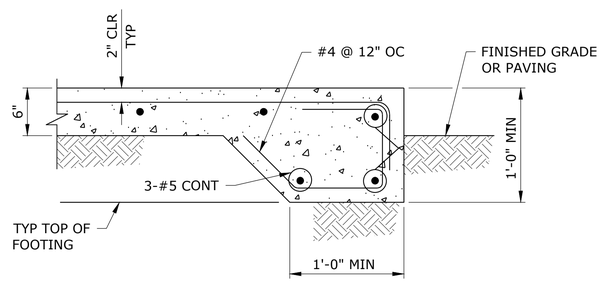

SLAB EDGE (6 / -)

SCALE: NTS

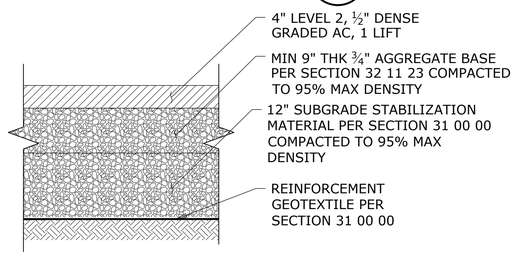

AC PAVEMENT SECTION (3 / -)

SCALE: NTS

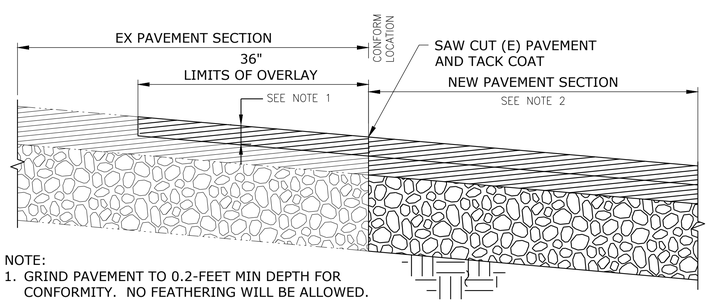

NOTE:

1. GRIND PAVEMENT TO 0.2-FEET MIN DEPTH FOR CONFORMITY. NO FEATHERING WILL BE ALLOWED.

2. REMOVE AND DISPOSE OF (E) PAVEMENT. REMOVE (E) BASE MATERIAL. BASE MATERIAL MAY BE STOCKPILED AND RE-USED IF IT MEETS REQUIREMENTS FOR NEW AGGREGATE BASE.

NEW TO EXISTING PAVEMENT CONFORM (7 / -)

SCALE: NTS

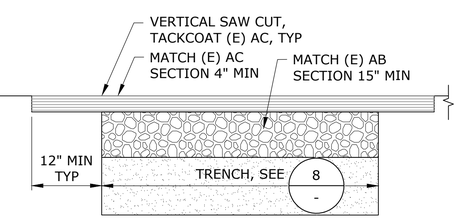

TRENCH PAVEMENT REPAIR NOTES:

1. FOR GRAVEL SURFACE MATCH EXISTING GRAVEL SURFACE SECTION.

TRENCH PAVEMENT REPAIR (4 / -)

SCALE: NTS

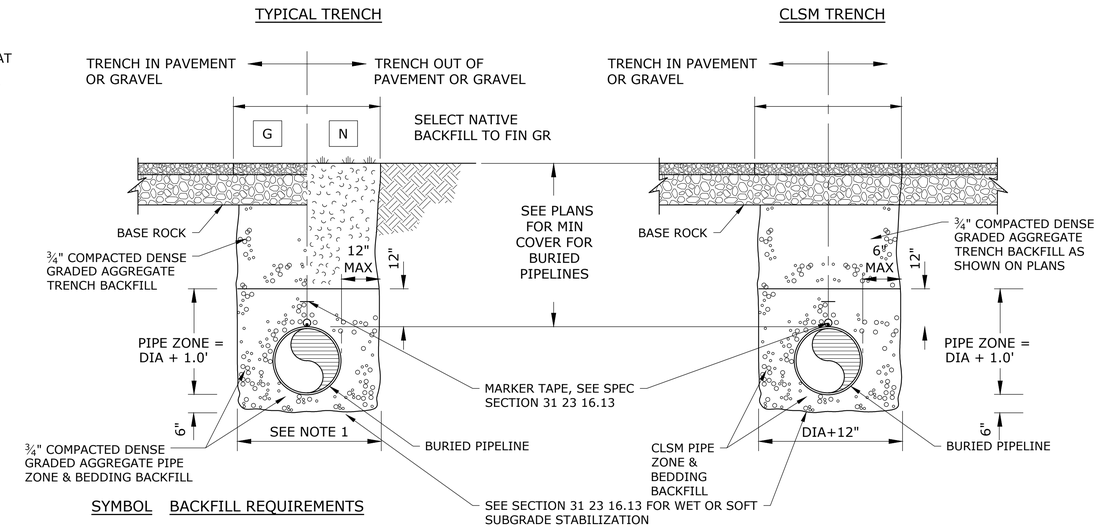

SYMBOL	BACKFILL REQUIREMENTS
G	FURNISH & INSTALL CRUSHED ROCK BEDDING & PIPE ZONE & CRUSHED ROCK TRENCH BACKFILL AS SHOWN ON PLANS, TO DRIVEWAY BASE. COMPACT MATERIAL IN LIFTS TO ACHIEVE 90% OF MAX DENSITY IN ACCORDANCE W/ AASHTO T-99.
N	FURNISH & INSTALL CRUSHED ROCK BEDDING & PIPE ZONE BACKFILL COMPACTED TO 90% OF MAX DENSITY PER AASHTO T-99. FURNISH & INSTALL NATIVE TRENCH BACKFILL. REPLACE TOPSOIL & BACKFILL W/ NATIVE MATERIAL. FINISH TRENCH SURFACE TO MATCH ORIGINAL CONTOURS.

NOTE:

1. TRENCH WIDTH FOR PIPES 24" IN DIA OR GREATER=DIA+24". FOR PIPES LESS THAN 24" IN DIA, TRENCH WIDTH SHALL BE DIA+18".

PIPE TRENCH DETAIL (8 / -)

SCALE: NTS

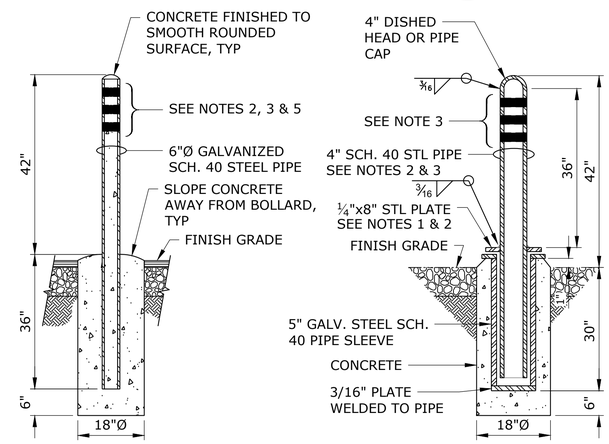

TRAFFIC BOLLARD NOTES:

1. APPLY ZINC PRIMER AFTER WELDING AS NEEDED.
2. POST TO BE PAINTED YELLOW AFTER FABRICATION.
3. APPLY 3 STRIPES, 2" WIDE CAUTION TAPE (REFLECTORIZED). START 2" FROM TOP AND SPACE 2" APART.
4. POST SHALL BE HOT DIPPED GALVANIZED.
5. PERMANENT POST TO BE FILLED WITH CONCRETE.
6. USE REMOVABLE BOLLARD UNLESS OTHERWISE SHOWN ON DRAWINGS.

TRAFFIC BOLLARD (9 / -)

SCALE: NTS

NO.	DATE	BY	REVISION

NOTICE

0 ½ 1

IF THIS BAR DOES NOT MEASURE 1" THEN DRAWING IS NOT TO SCALE

BVB DESIGNED
LBK DRAWN
WJM CHECKED

REGISTERED PROFESSIONAL ENGINEER — BROOKE VICTORIA BARRY — 12/31/2023

WEST YOST Water. Engineered.

Sweet Home Oregon at its best!

MAHLER WATER RECLAMATION FACILITY IMPROVEMENTS PROJECT PHASE 1

CIVIL DETAILS 1

PROJECT NO.: 936-50-21-09 | SCALE: AS SHOWN | DATE: AUGUST 2022

SHEET C-001

P:\Clients\936 City Of Sweet Home\50-21-09 WWTP Phase 1 Final Design\CAD\Production\19-2605-OR-C-DET.dwg C-001 7/28/2022 10:56 AM LKERCADO 24.1s (LMS Tech)

DocuSign Envelope ID: 09934EE9-0C55-40A3-8631-9C0AF6797111

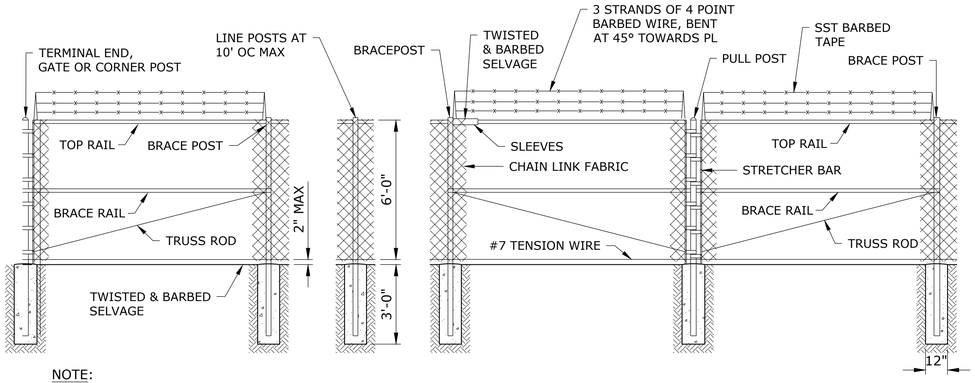

NOTE:

1. LAYOUT AND INSTALL FENCE POSTS TO MAINTAIN MAXIMUM 2" SPACE BETWEEN BOTTOM OF FENCE AND GROUND SURFACE.

CHAIN LINK FENCE DETAIL (1 / -)

SCALE: NTS

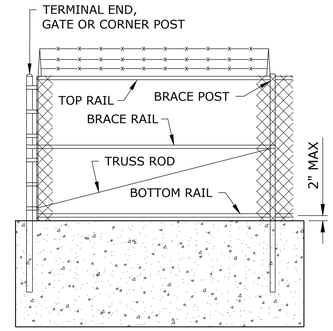

ELEVATION

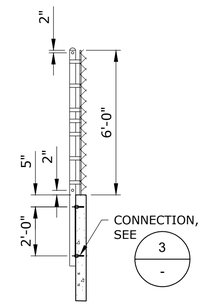

SECTION

WALL MOUNTED CHAIN LINK FENCE DETAIL (2 / -)

SCALE: NTS

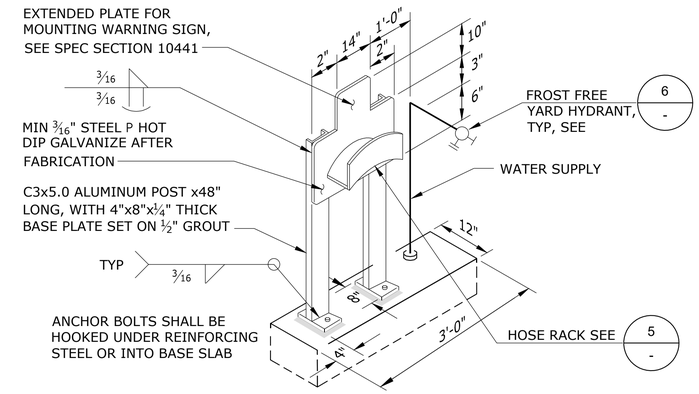

TYPE A POST MOUNTED UTILITY STATION (4 / -)

SCALE: NTS

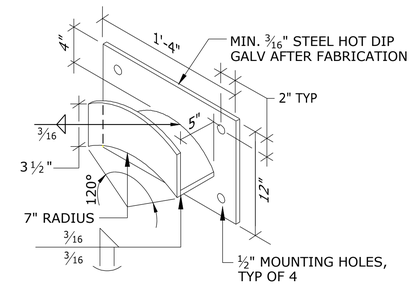

HOSE RACK (5 / -)

SCALE: NTS

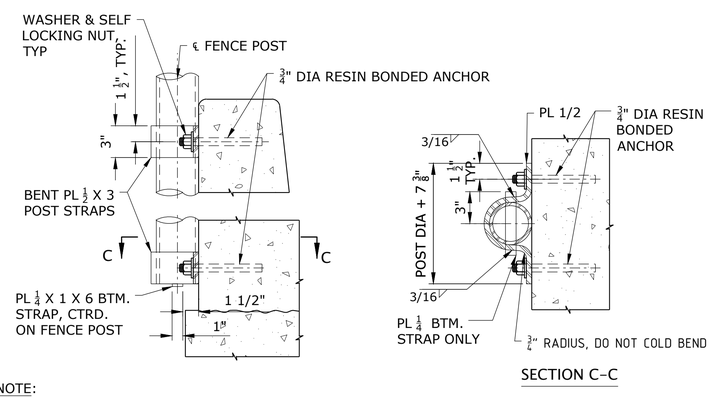

SECTION C–C

NOTE:

1. AS AN ALTERNATE TO RESIN BONDED ANCHOR USE 2-3/4" DIA. X 5" EMBEDMENT CONCRETE INSERT W/ MIN SAFE WORKING LOADS IN 3300 PSI CONCRETE OF 4.3 KIPS TENSION.

WALL MOUNTED CHAIN LINK FENCE CONNECTION DETAIL (3 / -)

SCALE: NTS

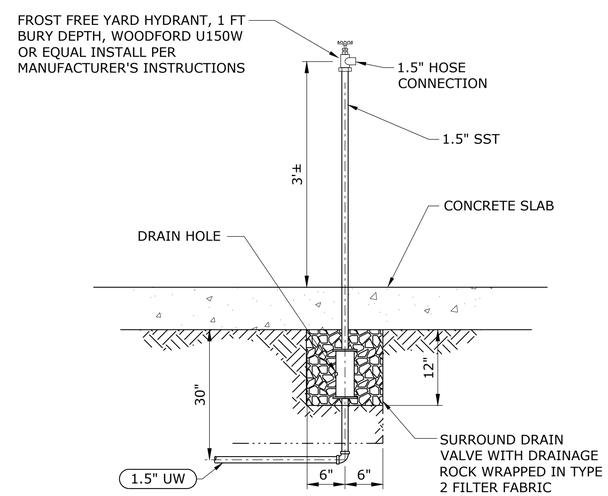

FROST FREE YARD HYDRANT (6 / -)

SCALE: NTS

NO.	DATE	BY	REVISION

NOTICE

0 ½ 1

IF THIS BAR DOES NOT MEASURE 1" THEN DRAWING IS NOT TO SCALE

BVB DESIGNED
LBK DRAWN
WJM CHECKED

REGISTERED PROFESSIONAL ENGINEER — BROOKE VICTORIA BARRY — 8/29/2022 — NOV. 14, 2012 — EXPIRES : 12/31/2023

WEST YOST Water. Engineered.

Sweet Home Oregon at its best!

MAHLER WATER RECLAMATION FACILITY IMPROVEMENTS PROJECT PHASE 1

CIVIL DETAILS 2

PROJECT NO.: 936-50-21-09 | SCALE: AS SHOWN | DATE: AUGUST 2022

SHEET C-002

P:\Clients\936 City Of Sweet Home\50-21-09 WWTP Phase 1 Final Design\CAD\Production\19-2605-OR-C-DET.dwg C-002 7/28/2022 10:56 AM LKERCADO 24.1s (LMS Tech)

DocuSign Envelope ID: 09934EE9-0C55-40A3-8631-9C0AF6797111

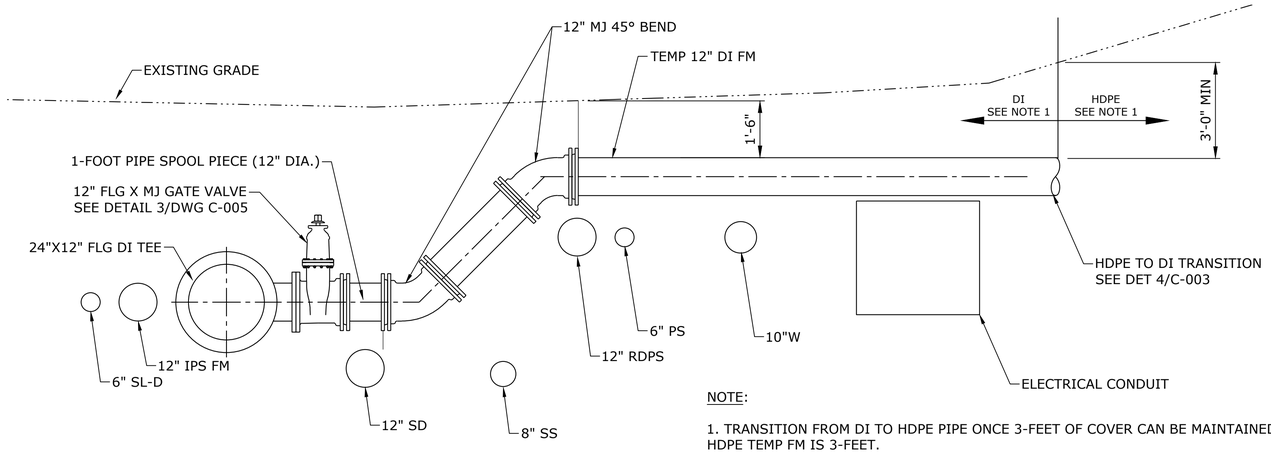

NOTE:

1. TRANSITION FROM DI TO HDPE PIPE ONCE 3-FEET OF COVER CAN BE MAINTAINED. MIN COVER FOR HDPE TEMP FM IS 3-FEET.

24" FM TO 12" TEMP FM CONNECTION (1 / -)

SCALE: NTS

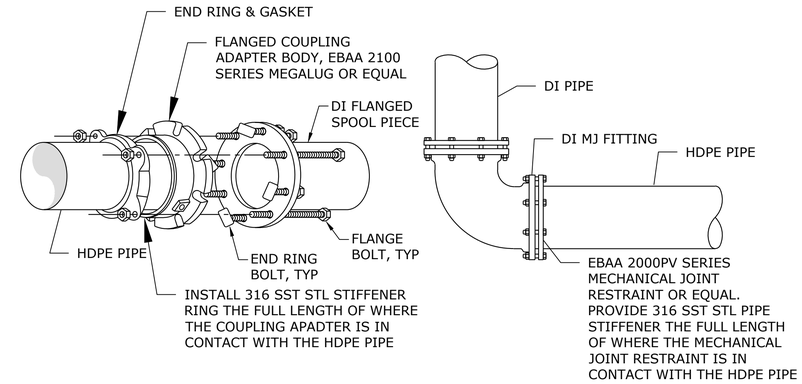

HDPE TO FLANGED DI CONNECTION

HDPE TO MECHANICAL JOINT DI CONNECTION

HDPE TO DUCTILE IRON CONNECTION (4 / -)

SCALE: NTS

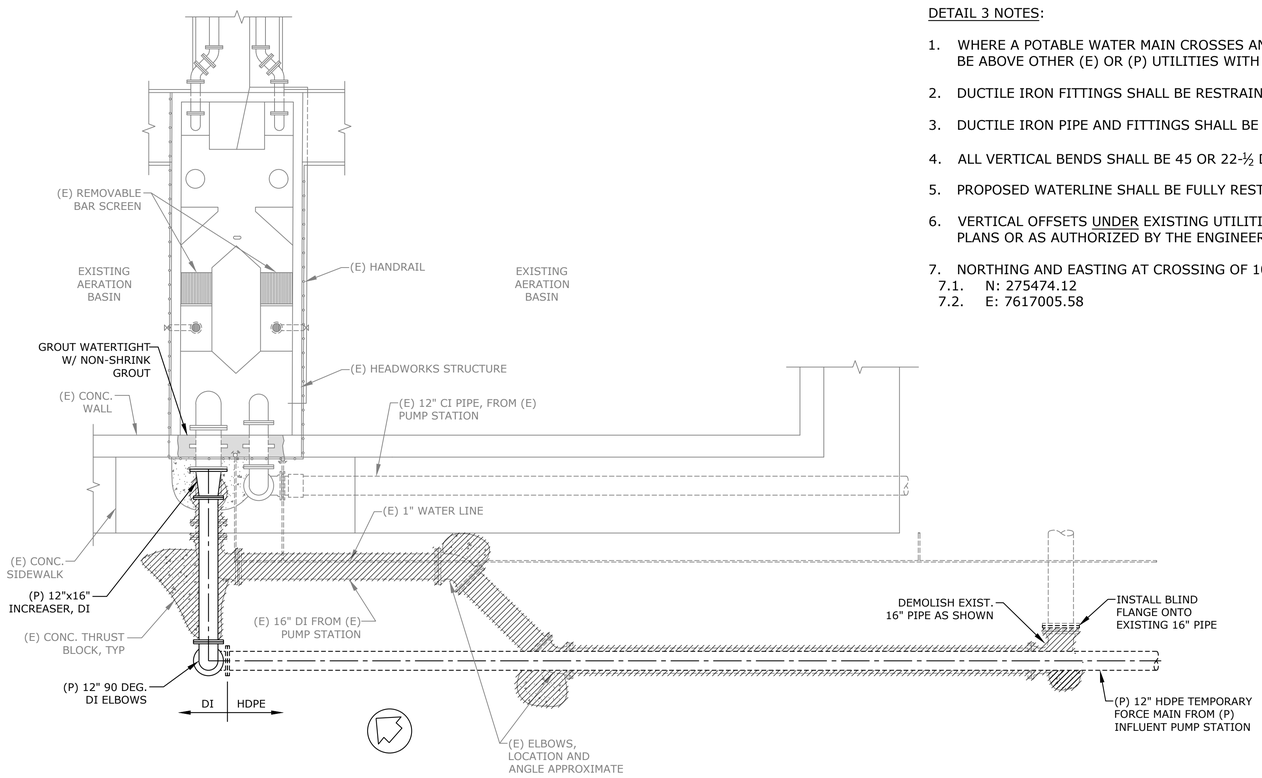

ENLARGEMENT OF TEMPORARY FORCE MAIN CONNECTION TO AERATION BASIN (2 / -)

SCALE: 1/4"=1'-0"

DETAIL 3 NOTES:

1. WHERE A POTABLE WATER MAIN CROSSES ANOTHER UTILITY, THE POTABLE WATER MAIN SHALL BE ABOVE OTHER (E) OR (P) UTILITIES WITH 18" MINIMUM CLEARANCE.
2. DUCTILE IRON FITTINGS SHALL BE RESTRAINED MJ AS SPECIFIED IN SECTION 40 05 10.
3. DUCTILE IRON PIPE AND FITTINGS SHALL BE ENCASED PER SECTION 40 05 10.
4. ALL VERTICAL BENDS SHALL BE 45 OR 22-½ DEGREE BENDS.
5. PROPOSED WATERLINE SHALL BE FULLY RESTRAINED.
6. VERTICAL OFFSETS UNDER EXISTING UTILITIES CAN BE USED ONLY WHERE CALLED OUT IN THE PLANS OR AS AUTHORIZED BY THE ENGINEER.
7. NORTHING AND EASTING AT CROSSING OF 10" WATERLINE AND FUTURE 30" GRIT PIPE:
   7.1. N: 275474.12
   7.2. E: 7617005.58

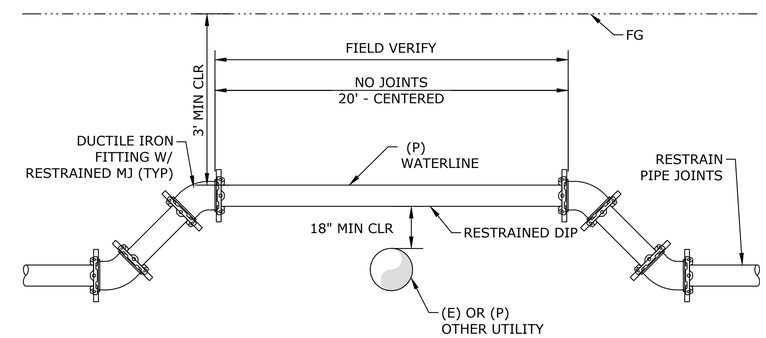

TYPICAL VERTICAL OFFSET OVER UTILITY

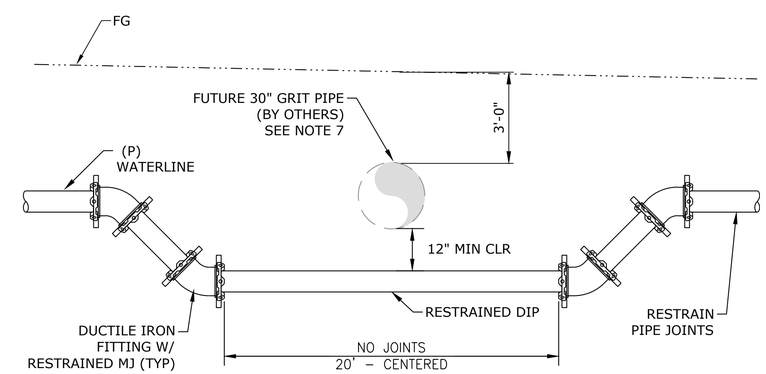

VERTICAL OFFSET UNDER FUTURE GRIT PIPE

WATERLINE UTILITY CROSSINGS (3 / -)

SCALE: NTS

NO.	DATE	BY	REVISION

NOTICE

0 ½ 1

IF THIS BAR DOES NOT MEASURE 1" THEN DRAWING IS NOT TO SCALE

BVB DESIGNED
LBK DRAWN
WJM CHECKED

REGISTERED PROFESSIONAL ENGINEER — STATE OF OREGON — BROOKE VICTORIA BARRY — 8/2/2022 — EXPIRES : 12/31/2023

WEST YOST
Water. Engineered.

Sweet Home Oregon at its best!

MAHLER WATER RECLAMATION FACILITY IMPROVEMENTS PROJECT PHASE 1

CIVIL DETAILS 3

PROJECT NO.: 936-50-21-09 | SCALE: AS SHOWN | DATE: AUGUST 2022

SHEET C-003

P:\Clients\936 City Of Sweet Home\50-21-09 WWTP Phase 1 Final Design\CAD\Production\19-2605-OR-C-DET.dwg C-003 7/28/2022 10:56 AM LKERCADO 24.1s (LMS Tech)

DocuSign Envelope ID: 09934EE9-0C55-40A3-8631-9C0AF6797111

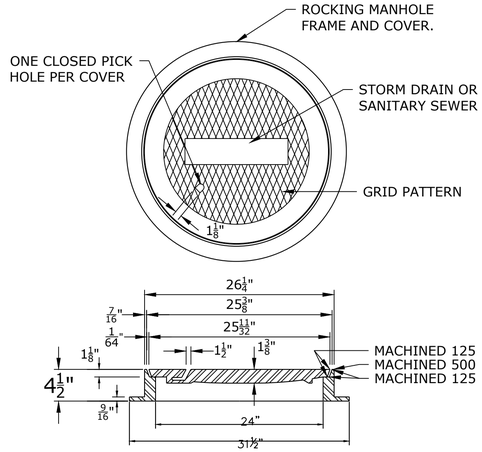

NOTES:
1. SPECIFY CASTING OF WORDS "STORM DRAIN" OR "SANITARY SEWER" WHEN ORDERING.
2. ALL MATERIAL USED IN MANUFACTURING SHALL CONFORM TO A.S.T.M. DESIGNATION A-48 CLASS 35 B, OR OF UNITED STATES GOVERNMENT SPECIFICATIONS QQ1-652B
3. MINIMUM WEIGHT COMPONENTS: COVER - 130 POUNDS FRAME - 135 POUNDS
4. 4 FRAME AND COVER SHALL BE H-20 TRAFFIC RATED

MANHOLE FRAME AND COVER (1 / -)
SCALE: NTS

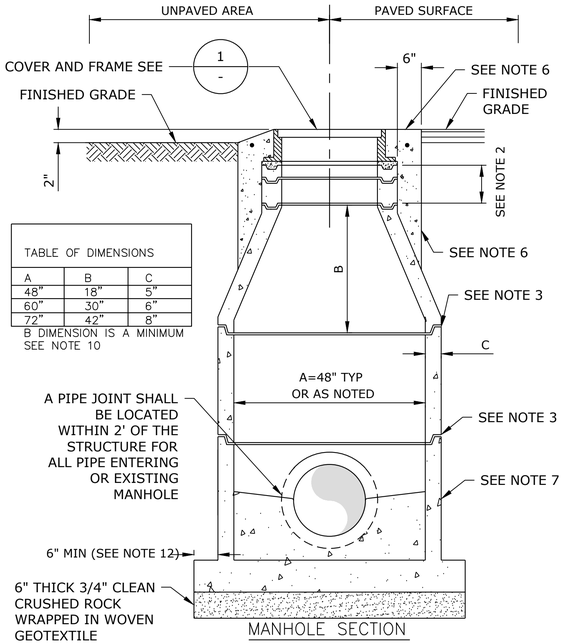

TABLE OF DIMENSIONS		
A	B	C
48"	18"	5"
60"	30"	6"
72"	42"	8"

B DIMENSION IS A MINIMUM SEE NOTE 10

PRECAST ECCENTRIC MANHOLE (2 / -)
SCALE: NTS

PRECAST MANHOLE NOTES:

1. WHEN MANHOLES ARE INSTALLED IN UNPAVED AREAS, THE TOP OF THE COVER SHALL BE 2" ABOVE GRADE.
2. 3" GRADE ADJUSTMENT RING AS NECESSARY. MAX. HEIGHT OF GRADE ADJUSTMENT RINGS = 12".
3. SET ALL BARREL SECTIONS & TAPER SECTIONS IN PREFORMED PLASTIC SEALING COMPOUND.
4. CONE SECTION (TAPER) SHALL BE ECCENTRIC.
5. PRECAST BASE SHALL BE PLACED ON 6" MINIMUM OF COMPACTED 3/4" CRUSHED ROCK INSTALLED AGAINST UNDISTURBED EARTH.
6. CLASS "A" CONC. COLLAR SHALL BE HAVE NO. 4 REINFORCEMENT HOOP. CONCRETE COLLAR TO EXTEND 6" INTO CONE SECTION.
7. STANDARD MANHOLE BARREL SECTION PER ASTM C478.
8. FLEXIBLE PIPE CONNECTION AT MANHOLE, KOR-N-SEAL, A-LOK OR EQUAL.
9. MANHOLE RIM ELEVATION SHOWN ON PLAN IS APPROXIMATE. ADJUST FRAME AND COVER TO GRADE AFTER STREET OR SIDEWALK HAS BEEN CONSTRUCTED ON ALL SIDES OF THE STRUCTURE. COMPLETE PAVING AFTER STRUCTURE IS ADJUSTED.
10. MANHOLE COMPONENTS SHALL CONFORM TO CURRENT ASTM C-478 SPECIFICATIONS.
11. USE FLAT SLAB MANHOLE TOP IF DEPTH OF MANHOLE DOES NOT PERMIT INSTALLATION OF ECCENTRIC CONE.
12. FOR STANDARD MANHOLES PROVIDE PRECAST INTEGRAL BASE. FOR SEWER DIVERSION MANHOLES PROVIDE PRECAST MANHOLE SECTIONS OVER CAST IN PLACE MANHOLE STRUCTURE. SEE DETAIL 3.
13. PROVIDE DROP CONNECTION FOR ANY MANHOLE WHERE THE INVERT ELEVATION OF THE INCOMING PIPE IS MORE THAN 3-FEET ABOVE THE OUTLET PIPE INVERT ELEVATION. SEE DETAIL 2 SHEET C-006.

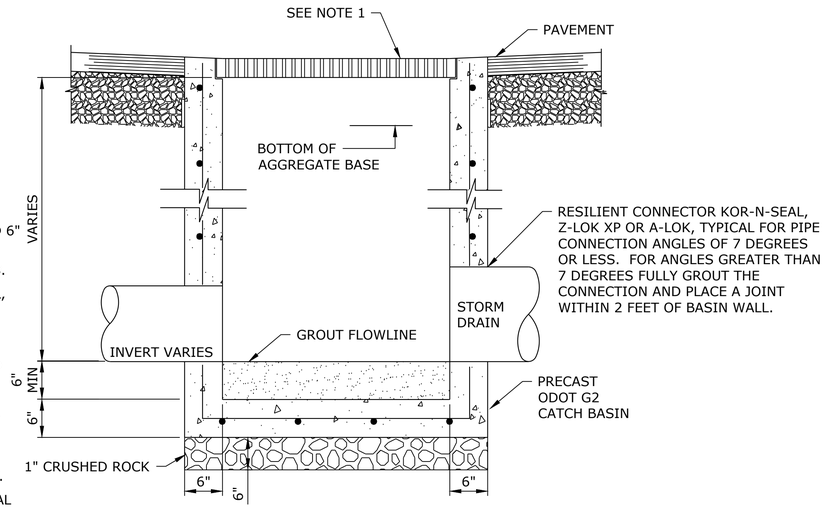

NOTES:
1. FOR CATCH BASIN LOCATED IN TEMPORARY WASHDOWN BASIN, PROVIDE A GALVANIZED WELDED STEEL GRATE SUITABLE FOR H-20 WHEEL LOADING. FOR CATCH BASINS LOCATED WITHIN THE ACCESS ROADWAY, PROVIDE ASTM A536 DUCTILE IRON SOLID COVERS SUITABLE FOR H-20 LOADING (D&L MODEL I-4500-02, OR EQUAL).

CATCH BASIN / DRAIN INLET (5 / -)
SCALE: NTS

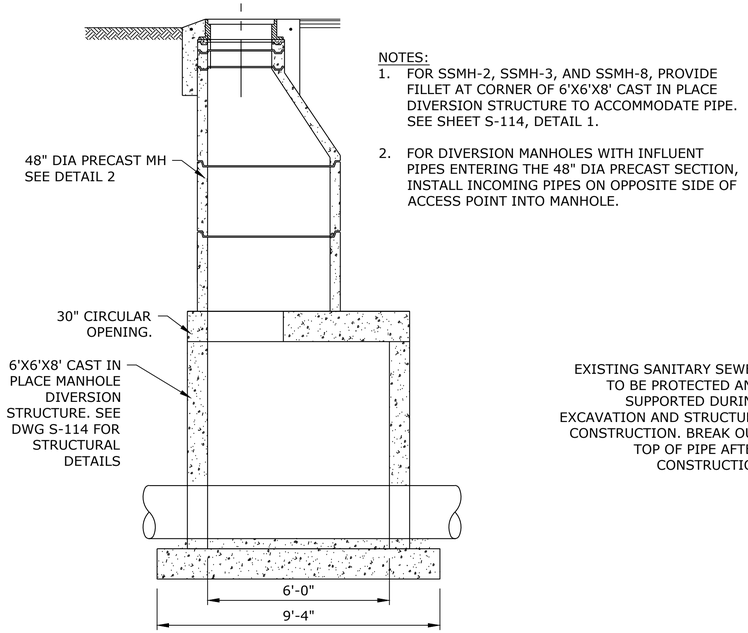

NOTES:
1. FOR SSMH-2, SSMH-3, AND SSMH-8, PROVIDE FILLET AT CORNER OF 6'X6'X8' CAST IN PLACE DIVERSION STRUCTURE TO ACCOMMODATE PIPE. SEE SHEET S-114, DETAIL 1.
2. FOR DIVERSION MANHOLES WITH INFLUENT PIPES ENTERING THE 48" DIA PRECAST SECTION, INSTALL INCOMING PIPES ON OPPOSITE SIDE OF ACCESS POINT INTO MANHOLE.

SEWER DIVERSION MANHOLE (3 / -)
SCALE: NTS

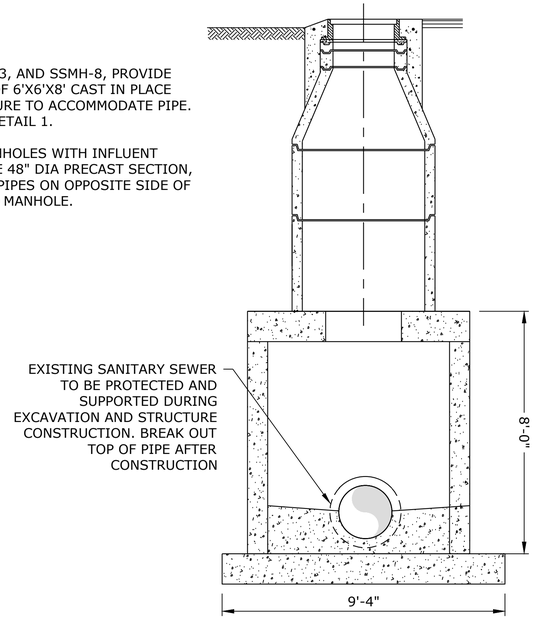

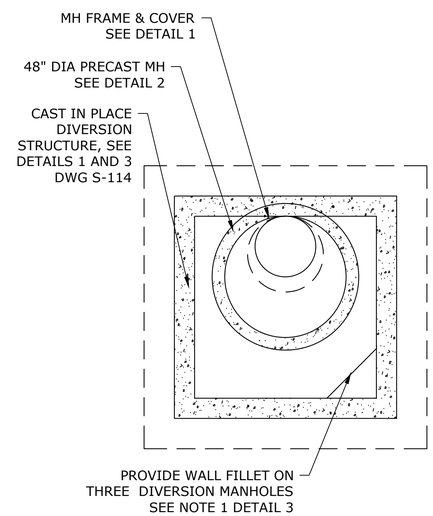

SEWER DIVERSION MANHOLE TOP PLAN (4 / -)
SCALE: NTS

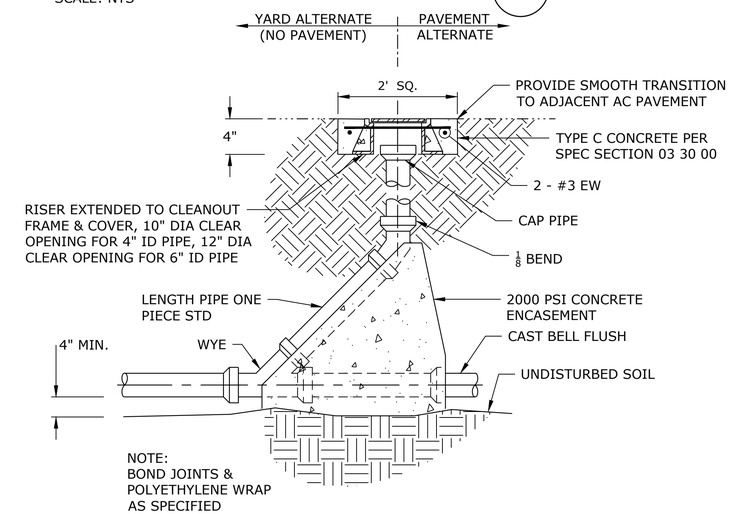

CLEANOUT (6 / -)
SCALE: NTS

NO.	DATE	BY	REVISION

NOTICE
0 ½ 1
IF THIS BAR DOES NOT MEASURE 1" THEN DRAWING IS NOT TO SCALE

BVB DESIGNED
LBK DRAWN
WJM CHECKED

REGISTERED PROFESSIONAL ENGINEER — BROOKE VICTORIA BARRY — NOV 14, 2012 — EXPIRES : 12/31/2023

WEST YOST Water. Engineered.

Sweet Home Oregon at its best!

MAHLER WATER RECLAMATION FACILITY IMPROVEMENTS PROJECT PHASE 1

CIVIL DETAILS 4

PROJECT NO.: 936-50-21-09 | SCALE: AS SHOWN | DATE: AUGUST 2022

SHEET C-004

P:\Clients\936 City Of Sweet Home\50-21-09 WWTP Phase 1 Final Design\CAD\Production\19-2605-OR-C-DET.dwg C-004 8/1/2022 12:45 PM BBARRY 24.1s (LMS Tech)

DocuSign Envelope ID: 09934EE9-0C55-40A3-8631-9C0AF6797111

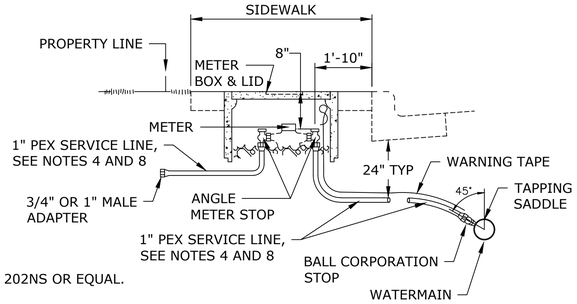

NOTES:

1. TAPPING SADDLE SHALL BE ROMAC, 202NS OR EQUAL.
2. 1" BALL CORPORATION STOP SHALL BE FB1100-4-Q-NL
3. FOR 1" SERVICE PROVIDE LOCKING WING 1"X3/4" FORD BA63-332W-Q-NL METER CURB STOP WITH METER SWIVEL NUT, FORD 3/4" L31-13-NL ANGLE METER COUPLING WITH METER SWIVEL NUT.
4. WATER SERVICE LINE SHALL BE 1" AWWA C904-06 CROSS-LINKED POLYETHYLENE (PEX) BLUE WATER SERVICE LINE, SDR 9, CTS MUNICIPEX (PEXA) BY REHAU, OR EQUAL.
5. METER BOX SHALL BE DFW 11" X 18" X 12" GRAY "WIDE BODY" METER BOX POLYMER H20 RATED DFW486WBC4-12-BODY, OR APPROVED EQUAL. METER BOX COVER SHALL BE A DFW 11"X18" GRAY SOLID METER BOX COVER WITH MAGNET POLYMER DFW486C-4M-NHK-LID.
6. BACKFILL IN METER BOX SHALL BE 3/4"-0 CRUSHED ROCK.MINIMUM THICKNESS SHALL BE 2" BELOW THE BASE OF THE METER BOX.
7. PROVIDE AND INSTALL SENSUS $\frac{3}{4}$" SR2-ER-TRPL 100 CU.FT. LEAD FREE METER".
8. ATTACH COPPERHEAD IND. 12 AWG SUPERFLEX TRACER WIRE TO THE PEX SERVICE LINE WITH ZIP-TIES,AT 10 FOOT INTERVALS, AND BE ROUTED INTO THE METER BOX WITH A MINIMUM OF 12" EXTENDED AND COILED. TRACER WIRE CONNECTION JUNCTIONS SHALL BE COPPERHEAD IND. BLUE SNAKEBITE LOCKING CONNECTORS.
9. INLCUDE COMPRESSION JOINT FITTINGS, WITH STAINLESS STEEL INSERT-STIFFENERS FORD INSERT 53-72-Q OR EQUAL.

1" WATER SERVICE

SCALE: NTS

1 / -

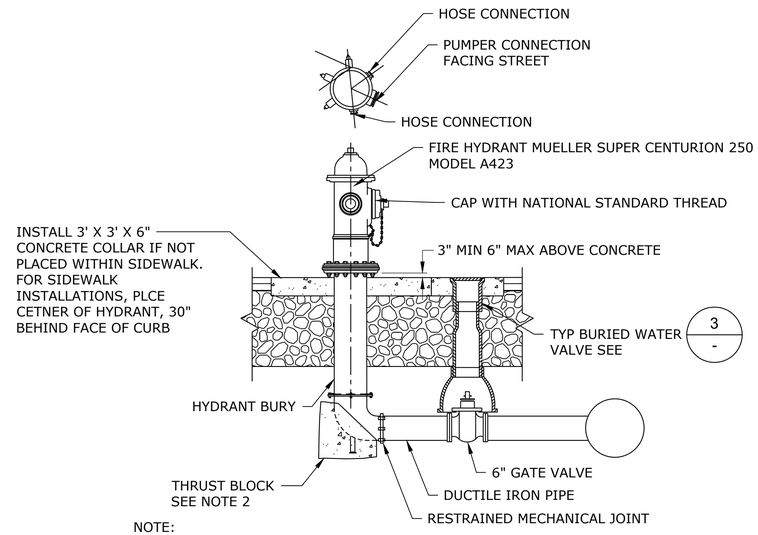

NOTE:

1. COAT ALL BURIED BOLTS AND NUTS WITH BITUMASTIC.
2. THRUST BLOCK SHALL HAVE A BEARING AREA OF 1.3 CY. BEARING AREA BASED ON ALLOWABLE SOIL BEARING VAKUE OF 2,000 PSF PRESSURE, 150 PSI LINE PRESURE, AND A FACTOR OF SAFETY OF 1.3.
3. THE HYDRANT SHALL BE PAINTED A METALLIC SILVER FOR THE BARREL SECTION, AND THE BONNET A COLOR BASED ON POST CONSTRUCTION FLOW TESTS PER NATIONAL STANDARD COLOR CODES.

FIRE HYDRANT

SCALE: NTS

2 / -

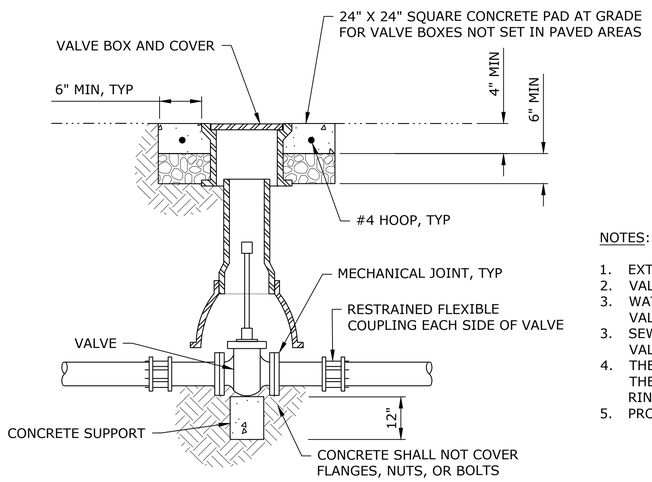

NOTES:

1. EXTENSIONS SHALL BE 6" ASTM D3034 SDR PVC PIPE (ONE PIECE).
2. VALVE BOX SHALL BE U.S. FILTER/PACIFIC WATER WORKS NO. 910 OR EQUAL.
3. WATER MAIN VALVE LIDS SHALL INCLUDE "W" IN THE DESIGN.FOR WATER VALVES PROVIDE VALVE BOX MODEL NO. IVB910WTR, OR EQUAL.
3. SEWER VALVE LIDS SHALL BE SHALL INCLUDE "S" IN THE DESIGN.FOR SEWER VALVES PROVIDE VALVE BOX MODEL NO. IVB910SWR, OR EQUAL.
4. THE OPERATOR NUT SHALL HAVE A DEPTH FROM 18"-36" FROM FINISH GRADE TO THE OPERATOR NUT. IF DEPTH TO NUT IS GREATER THAN 6-FEET A CENTERING RING ON THE EXTENSION MAY BE REQUIRED AS DETERMINED BY THE ENGINEER.
5. PROVIDE VC-212 VALVE CENTERING DEVICE.

TYPICAL BURIED VALVE

SCALE: NTS

3 / -

NO.	DATE	BY	REVISION

NOTICE

0 ½ 1

IF THIS BAR DOES NOT MEASURE 1" THEN DRAWING IS NOT TO SCALE

BVB DESIGNED
LBK DRAWN
WJM CHECKED

REGISTERED PROFESSIONAL ENGINEER — DocuSigned by: BRIAN C. BARRY — BTC0DEBDA371404... — OREGON — NOV 14, 2012 — BROOKE VICTORIA BARRY

EXPIRES : 12/31/2023

WEST YOST
Water. Engineered.

Sweet Home Oregon at its best!

MAHLER WATER RECLAMATION FACILITY IMPROVEMENTS PROJECT PHASE 1

CIVIL DETAILS 5

PROJECT NO.: 936-50-21-09 | SCALE: AS SHOWN | DATE: AUGUST 2022

SHEET C-005

P:\Clients\936 City Of Sweet Home\50-21-09 WWTP Phase 1 Final Design\CAD\Production\19-2605-OR-C-DET.dwg C-005 7/28/2022 10:56 AM LKERCADO 24.1s (LMS Tech)

DocuSign Envelope ID: 09934EE9-0C55-40A3-8631-9C0AF6797111

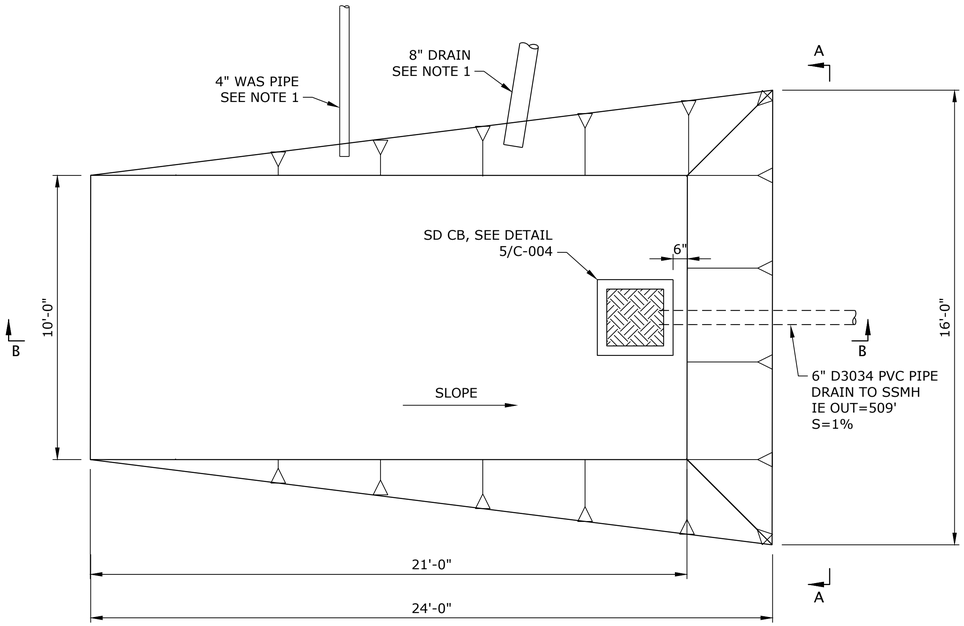

TEMPORARY WASHDOWN BASIN (1/-)

SCALE: 3/8"=1'-0"

NOTE:
1. CONTRACTOR TO VERIFY AND SUBMIT WAS AND DRAIN EXISTING PIPE DIAMETER, INVERT ELEVATION, AND PROPOSED PIPE LOCATION, EXTENSION LENGTH, ALIGNMENT, INVERT AT WASTE STORAGE BASIN, AND PIPE SLOPE TO ENGINEER.

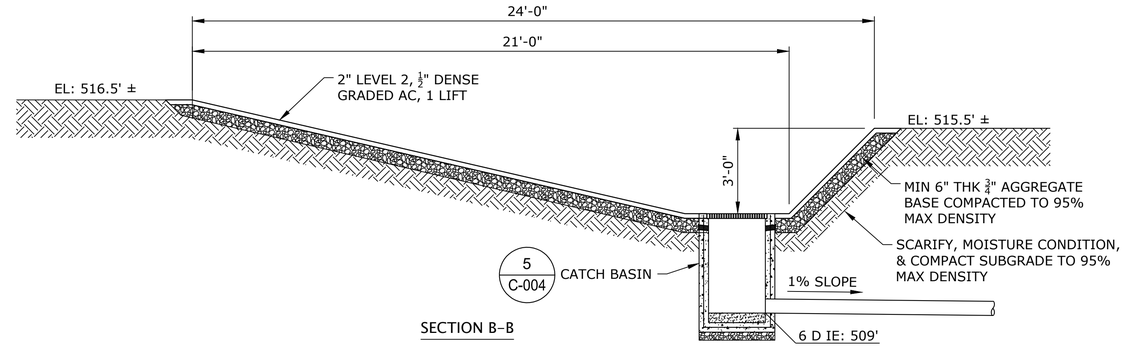

SECTION B–B

SCALE: 3/8"=1'-0"

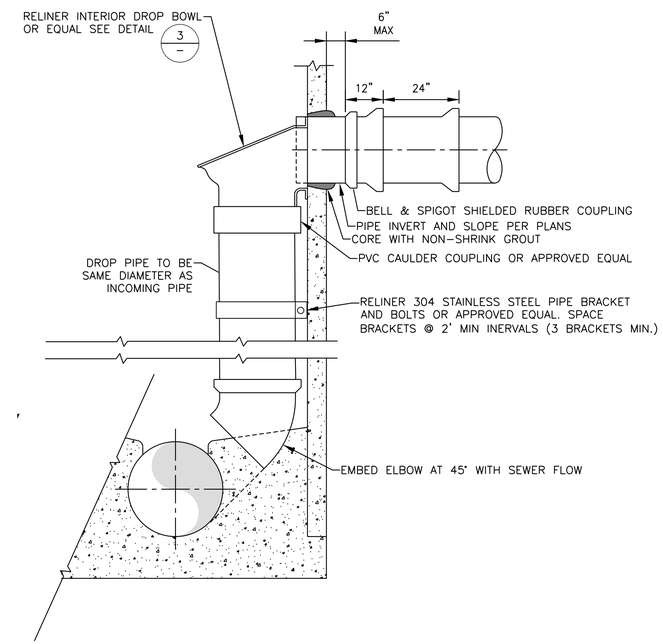

MANHOLE DROP CONNECTION (2/-)

SCALE: 3/8"=1'-0"

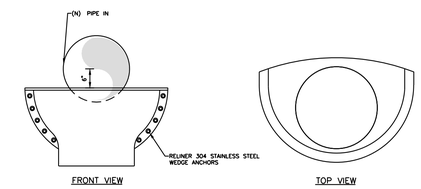

INTERIOR DROP BOWL (3/-)

SCALE: 3/8"=1'-0"

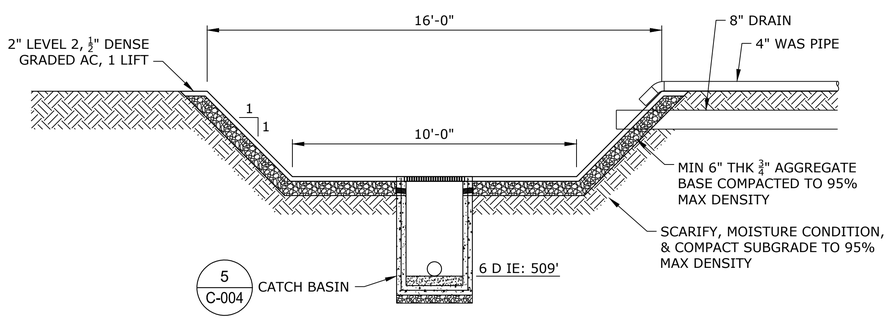

SECTION A–A

SCALE: 3/8"=1'-0"

NO.	DATE	BY	REVISION

NOTICE

0 ½ 1

IF THIS BAR DOES NOT MEASURE 1" THEN DRAWING IS NOT TO SCALE

BVB DESIGNED
SMB DRAWN
WJM CHECKED

REGISTERED PROFESSIONAL ENGINEER
DocuSigned by
85993FE
B7C02EBDA371404
OREGON
8/2/2022
NOV 14, 2017
BROOKE VICTORIA BARRY
EXPIRES : 12/31/2023

WEST YOST
Water. Engineered.

Sweet Home
Oregon at its best!

MAHLER WATER RECLAMATION FACILITY IMPROVEMENTS PROJECT PHASE 1

CIVIL DETAILS 6

PROJECT NO.: 936-50-21-09 | SCALE: AS SHOWN | DATE: AUGUST 2022

SHEET
C-006
12 of 135

P:\Clients\936 City Of Sweet Home\50-21-09 WWTP Phase 1 Final Design\CAD\Production\19-2605-OR-C-DET.dwg C-006 8/1/2022 12:45 PM BBARRY 24.1s (LMS Tech)

DocuSign Envelope ID: 09934EE9-0C55-40A3-8631-9C0AF6797111

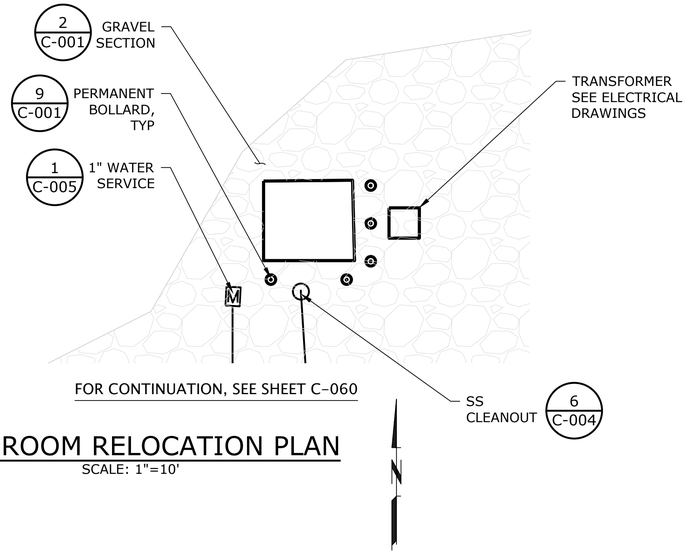

FOR CONTINUATION, SEE SHEET C-060

BATHROOM RELOCATION PLAN

SCALE: 1"=10'

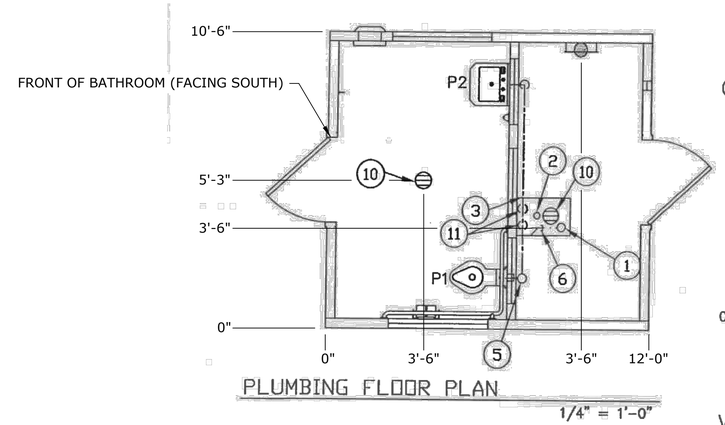

PLUMBING FLOOR PLAN

1/4" = 1'-0"

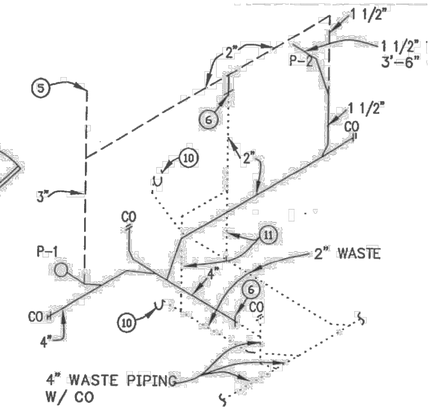

WASTE & VENT RISER DIAGRAM

NOTES:

1. CONTRACTOR TO RELOCATE EXISTING BATHROOM TO NEW LOCATION. SEE SHEET C-030 FOR STRUCTURE COORDINATES.
2. CONTRACTOR TO PROTECT EXISTING STRUCTURE DURING RELOCATION.
3. PREPARE NEW LOCATION ACCORDING TO BATHROOM GRAVEL PAD DETAIL ON THIS SHEET.
4. CONTRACTOR TO RECONNECT WATER SERVICE AND SEWER SERVICE. SEE EXISTING BATHROOM PLUMBING PLAN ON THIS SHEET.
5. CONTRACTOR TO RELOCATE AND REINSTALL ALL UTILITIES IN AND UNDERNEATH EXISTING STRUCTURE AND RECONNECT TO NEW WATER SERVICE AND SS CLEANOUT.

WATER PIPE - KEY NOTES:

1. 4" WASTE THRU FLOOR. SEE WASTE & VENT DIAGRAM.
2. 1-¼" COLD WATER THRU FLOOR.
3. VENT, CW & WASTE ALONG WALL. SEE WASTE & VENT AND WATER DIAGRAMS.
4. NOT USED.
5. 3" VENT THRU ROOF.
6. TO THIS POINT.
7. WATER HAMMER ARRESTOR SIOUX CHIEF HYDRA-RESTOR #654-C OR EQUAL.
8. ½" AIR QUICK CONNECTION W/ BALL VALVE FOR BLOWING OUT WATER PIPING.
9. ¾" HOSE BIBB W/ SCREW ON VACUUM BREAKER.
10. OPTIONAL FLOOR DRAIN, FIELD INSTALLED.
11. 2" VENTS, IF FLOOR DRAIN OPTION IS ACCEPTED.

EXIST BATHROOM PLUMBING FLOOR PLAN

SCALE: NTS

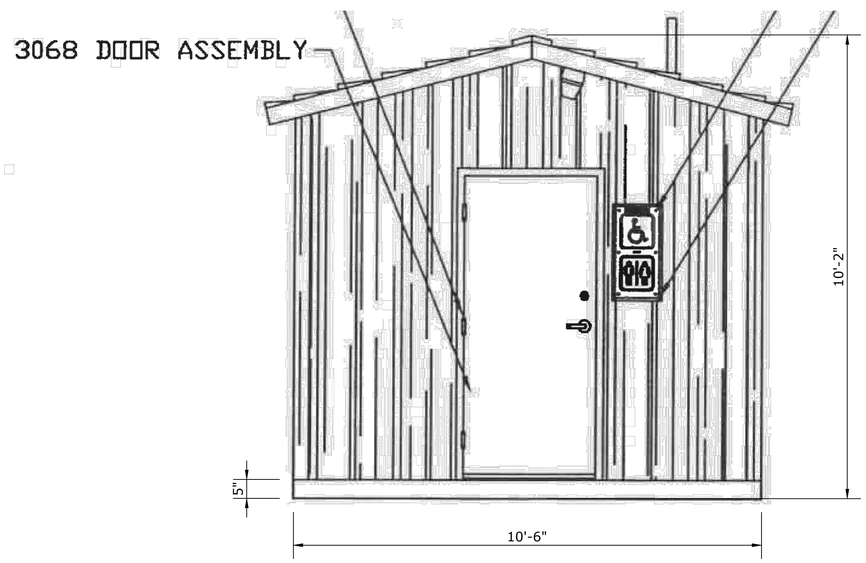

EXIST BATHROOM FRONT ELEVATION

SCALE: NTS

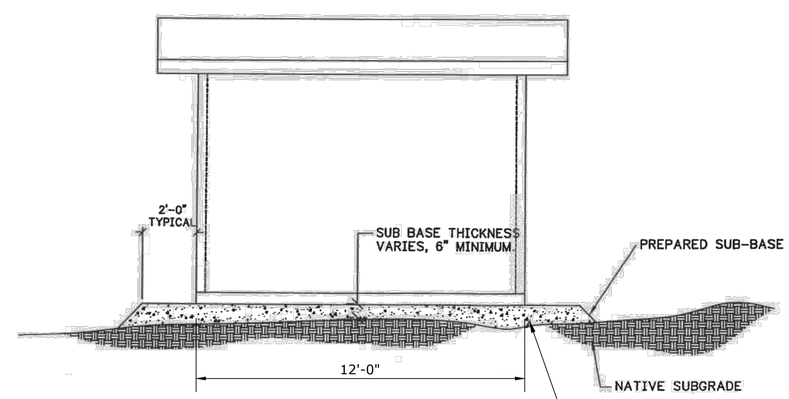

PRIOR TO PLACEMENT OF BUILDING, A PROPERLY PREPARED SUB-BASE SHALL BE PROVIDED. SUB-BASE SHALL BE A MINIMUM OF 6" THICK AND CONSIST OF ¾" MINUS CRUSHED ROCK COMPACTED TO 95% OF OPTIMUM DENSITY IN ACCORDANCE WITH ASTM D 1557. FINISHED SURFACE OF SUB-BASE SHALL BE UNIFORMLY LEVEL, NOT VARYING MORE THAN ½" FROM A TRUE HORIZONTAL PLANE.

BATHROOM GRAVEL PAD DETAIL

SCALE: NTS

NO.	DATE	BY	REVISION

NOTICE

0 ½ 1

IF THIS BAR DOES NOT MEASURE 1" THEN DRAWING IS NOT TO SCALE

BVB DESIGNED
BVB DRAWN
WJM CHECKED

REGISTERED PROFESSIONAL ENGINEER DocuSigned by: 85993RE Brooke Barry 8/2/2022 OREGON NOV. 14, 2017 BROOKE VICTORIA BARRY

EXPIRES : 12/31/2023

WEST YOST Water. Engineered.

Sweet Home Oregon at its best!

MAHLER WATER RECLAMATION FACILITY IMPROVEMENTS PROJECT PHASE 1

BATHROOM RELOCATION DETAILS

PROJECT NO.: 936-50-21-09 | SCALE: AS SHOWN | DATE: AUGUST 2022

SHEET C-007

13 of 135

P:\Clients\936 City Of Sweet Home\50-21-09 WWTP Phase 1 Final Design\CAD\Production\19-2605-OR-C-SITE-BTHRM.dwg C-007 7/27/2022 10:22 AM LKERCADO 24.1s (LMS Tech)

DocuSign Envelope ID: 09934EE9-0C55-40A3-8631-9C0AF6797111

EXISTING CONDITIONS NOTES:

1. CONTRACTOR TO FIELD VERIFY EXISTING LOCATIONS PRIOR TO CONSTRUCTION ACTIVITIES.

2. SURVEY WAS PERFORMED BY UDELL ENGINEERING & LAND SURVEYING, LLC. ALL ELEVATIONS ARE SHOWN ON THE NORTH AMERICAN VERTICAL DATUM OF 1988 (NAVD88). THE VERTICAL BENCHMARK USED FOR ESTABLISHING ELEVATIONS IS LINN COUNTY GPS CONTROL POINT 93450 LOCATED IN A MONUMENT BOX IN THE CENTER OF NANDINA ST. AT THE PC OF A CURVE TO THE LEFT AT THE EAST LINE OF STRAWBERRY HILL ESTATES.

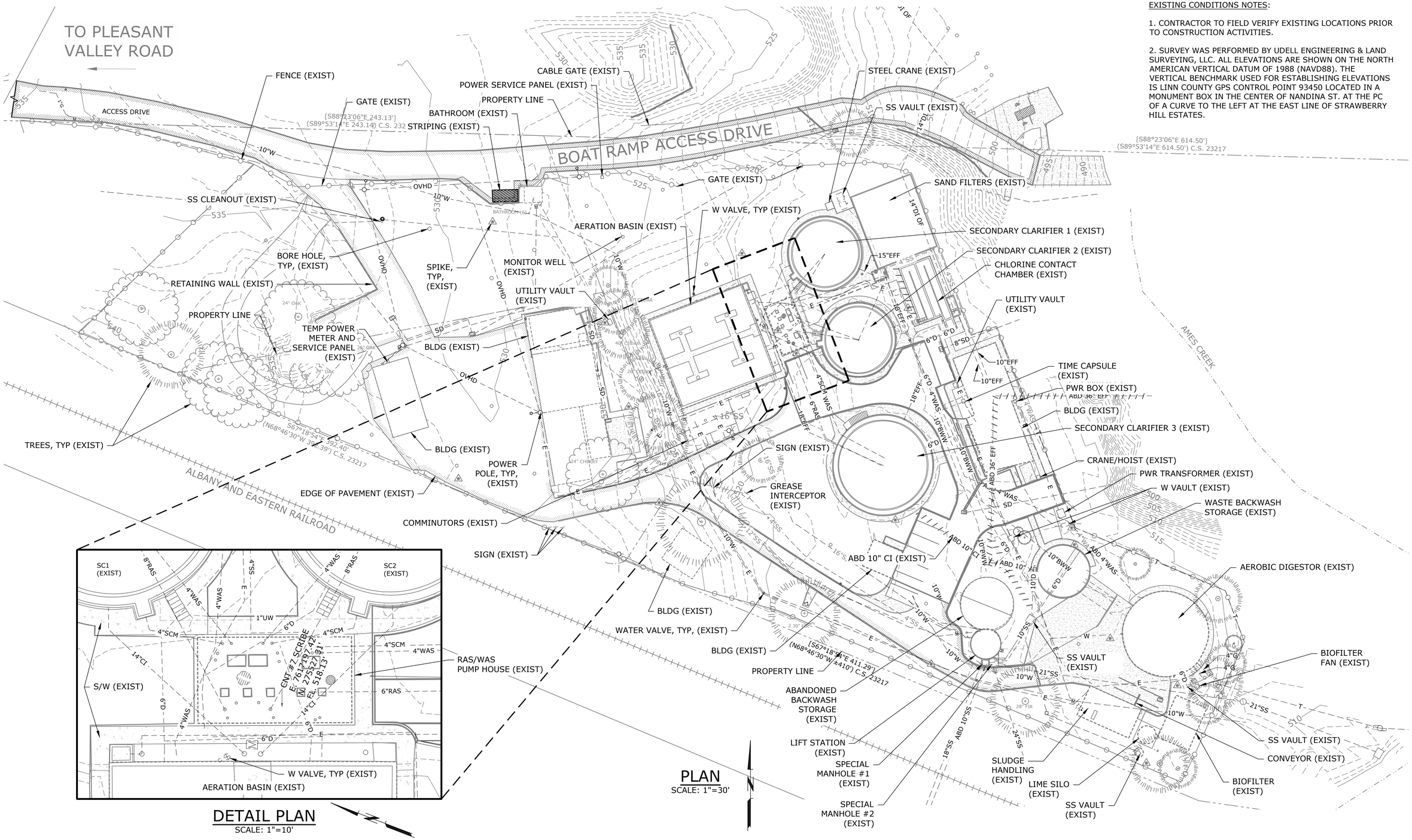

PLAN
SCALE: 1"=30'

DETAIL PLAN
SCALE: 1"=10'

NO.	DATE	BY	REVISION

NOTICE
0 ½ 1
IF THIS BAR DOES NOT MEASURE 1" THEN DRAWING IS NOT TO SCALE

BVB DESIGNED
BVB DRAWN
WJM CHECKED

REGISTERED PROFESSIONAL ENGINEER
DocuSigned by: 85993PE
8/2/2022
NOV. 14, 2017
BROOKE VICTORIA BARRY
EXPIRES : 12/31/2023

WEST YOST
Water. Engineered.

Sweet Home
Oregon at its best!

MAHLER WATER RECLAMATION FACILITY IMPROVEMENTS PROJECT PHASE 1

EXISTING CONDITIONS PLAN

PROJECT NO.: 936-50-21-09 | SCALE: AS SHOWN | DATE: AUGUST 2022

SHEET
C-010

P:\Clients\936 City Of Sweet Home\50-21-09 WWTP Phase 1 Final Design\CAD\Production\19-2605-OR-C-EXIST.dwg C-010 7/27/2022 1:33 PM BBARRY 24.1s (LMS Tech)

DocuSign Envelope ID: 09934EE9-0C55-40A3-8631-9C0AF6797111

P:\Clients\936 City Of Sweet Home\50-21-09 WWTP Phase 1 Final Design\CAD\Production\19-2605-OR-C-EXIST-PIPING.dwg C-011 7/21/2022 1:40 PM LKERCADO 24.1s (LMS Tech)

EXISTING CONDITIONS NOTES:

1. CONTRACTOR TO FIELD VERIFY EXISTING LOCATIONS PRIOR TO CONSTRUCTION ACTIVITIES.

2. SURVEY WAS PERFORMED BY UDELL ENGINEERING & LAND SURVEYING, LLC. ALL ELEVATIONS ARE SHOWN ON THE NORTH AMERICAN VERTICAL DATUM OF 1988 (NAVD88). THE VERTICAL BENCHMARK USED FOR ESTABLISHING ELEVATIONS IS LINN COUNTY GPS CONTROL POINT 93450 LOCATED IN A MONUMENT BOX IN THE CENTER OF NANDINA ST. AT THE PC OF A CURVE TO THE LEFT AT THE EAST LINE OF STRAWBERRY HILL ESTATES.

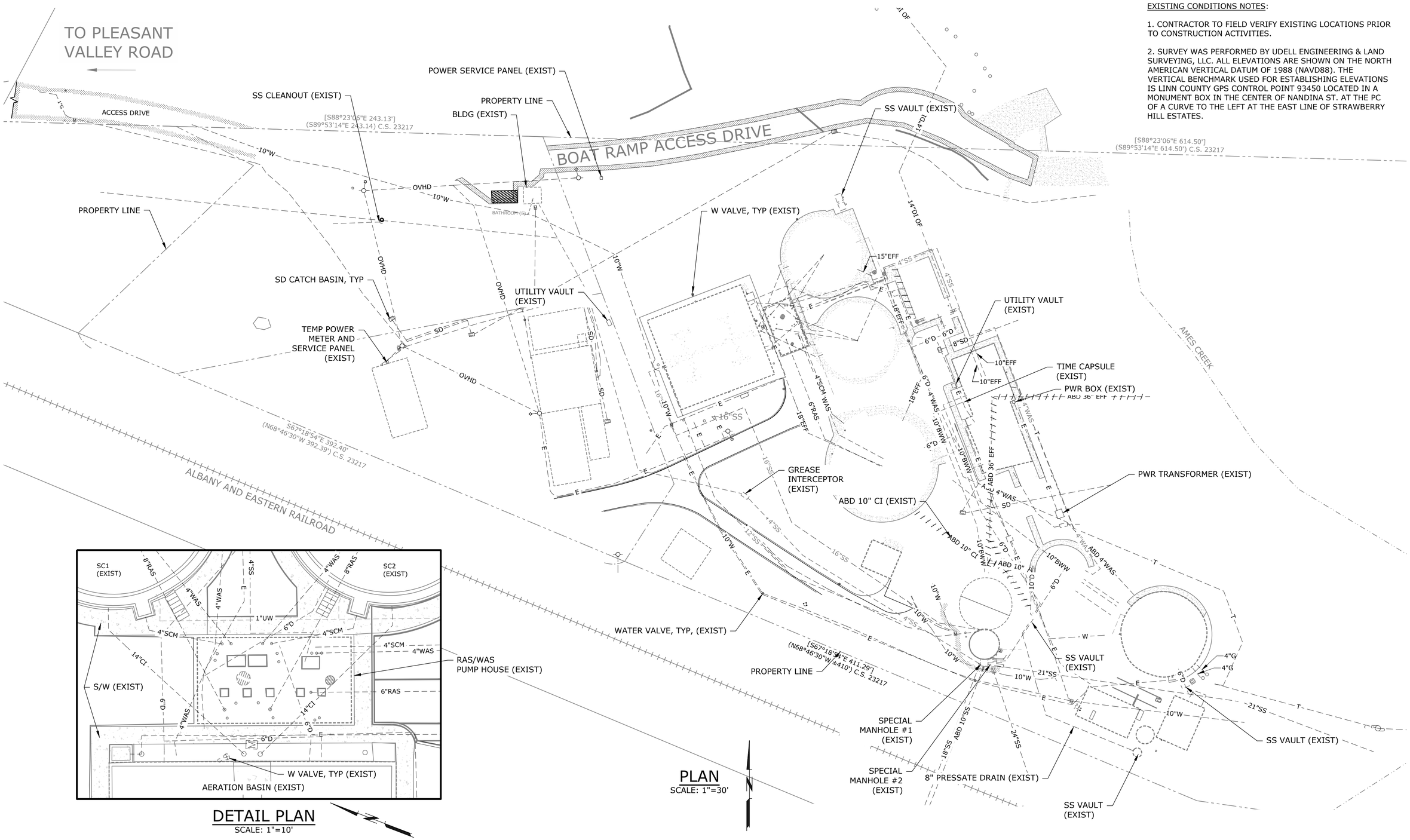

PLAN
SCALE: 1"=30'

DETAIL PLAN
SCALE: 1"=10'

NO.	DATE	BY	REVISION

NOTICE
0 ½ 1
IF THIS BAR DOES NOT MEASURE 1" THEN DRAWING IS NOT TO SCALE

BVB DESIGNED
BVB DRAWN
WJM CHECKED

REGISTERED PROFESSIONAL ENGINEER
Brooke Barry
#59935PE
DocuSigned by:
B7D9BB0AA7164...
8/2/2022
OREGON
NOV. 14, 2017
BROOKE VICTORIA BARRY
EXPIRES : 12/31/2023

WEST YOST
Water. Engineered.

Sweet Home Oregon at its best!

MAHLER WATER RECLAMATION FACILITY IMPROVEMENTS PROJECT PHASE 1

EXISTING UTIITIES PLAN

PROJECT NO.: 936-50-21-09 | SCALE: AS SHOWN | DATE: AUGUST 2022

SHEET
C-011
15 of 135

DocuSign Envelope ID: 09934EE9-0C55-40A3-8631-9C0AF6797111

P:\Clients\936 City Of Sweet Home\50-21-09 WWTP Phase 1 Final Design\CAD\Production\19-2605-OR-C-DEMO.dwg C-020 7/27/2022 10:40 AM LKERCADO 24.1s (LMS Tech)

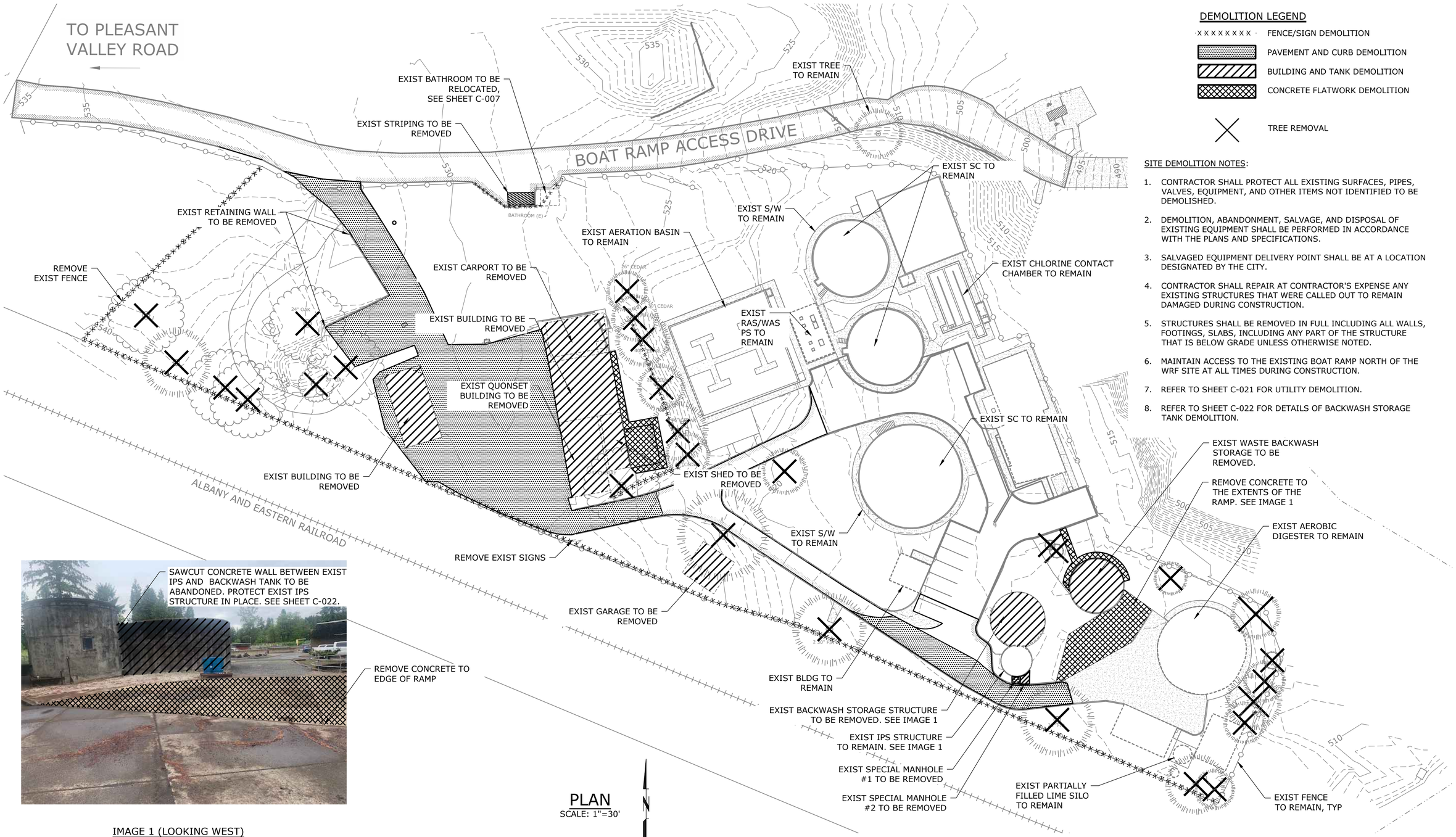

IMAGE 1 (LOOKING WEST)

PLAN
SCALE: 1"=30'

DEMOLITION LEGEND

- FENCE/SIGN DEMOLITION
- PAVEMENT AND CURB DEMOLITION
- BUILDING AND TANK DEMOLITION
- CONCRETE FLATWORK DEMOLITION
- TREE REMOVAL

SITE DEMOLITION NOTES:

1. CONTRACTOR SHALL PROTECT ALL EXISTING SURFACES, PIPES, VALVES, EQUIPMENT, AND OTHER ITEMS NOT IDENTIFIED TO BE DEMOLISHED.
2. DEMOLITION, ABANDONMENT, SALVAGE, AND DISPOSAL OF EXISTING EQUIPMENT SHALL BE PERFORMED IN ACCORDANCE WITH THE PLANS AND SPECIFICATIONS.
3. SALVAGED EQUIPMENT DELIVERY POINT SHALL BE AT A LOCATION DESIGNATED BY THE CITY.
4. CONTRACTOR SHALL REPAIR AT CONTRACTOR'S EXPENSE ANY EXISTING STRUCTURES THAT WERE CALLED OUT TO REMAIN DAMAGED DURING CONSTRUCTION.
5. STRUCTURES SHALL BE REMOVED IN FULL INCLUDING ALL WALLS, FOOTINGS, SLABS, INCLUDING ANY PART OF THE STRUCTURE THAT IS BELOW GRADE UNLESS OTHERWISE NOTED.
6. MAINTAIN ACCESS TO THE EXISTING BOAT RAMP NORTH OF THE WRF SITE AT ALL TIMES DURING CONSTRUCTION.
7. REFER TO SHEET C-021 FOR UTILITY DEMOLITION.
8. REFER TO SHEET C-022 FOR DETAILS OF BACKWASH STORAGE TANK DEMOLITION.

NO.	DATE	BY	REVISION

NOTICE
0 ½ 1
IF THIS BAR DOES NOT MEASURE 1" THEN DRAWING IS NOT TO SCALE

BVB DESIGNED
BVB DRAWN
WJM CHECKED

REGISTERED PROFESSIONAL ENGINEER
DocuSigned by: Brooke Barry
B5BD7BF6...
BTCD2EBDA371404...
OREGON
7/27/2022
JULY 14, 2022
BROOKE VICTORIA BARRY
EXPIRES : 12/31/2023

WEST YOST
Water. Engineered.

Sweet Home
Oregon at its best!

MAHLER WATER RECLAMATION FACILITY IMPROVEMENTS PROJECT PHASE 1

SITE DEMOLITION PLAN

PROJECT NO.: 936-50-21-09 | SCALE: AS SHOWN | DATE: AUGUST 2022

SHEET
C-020

DocuSign Envelope ID: 09934EE9-0C55-40A3-8631-9C0AF6797111

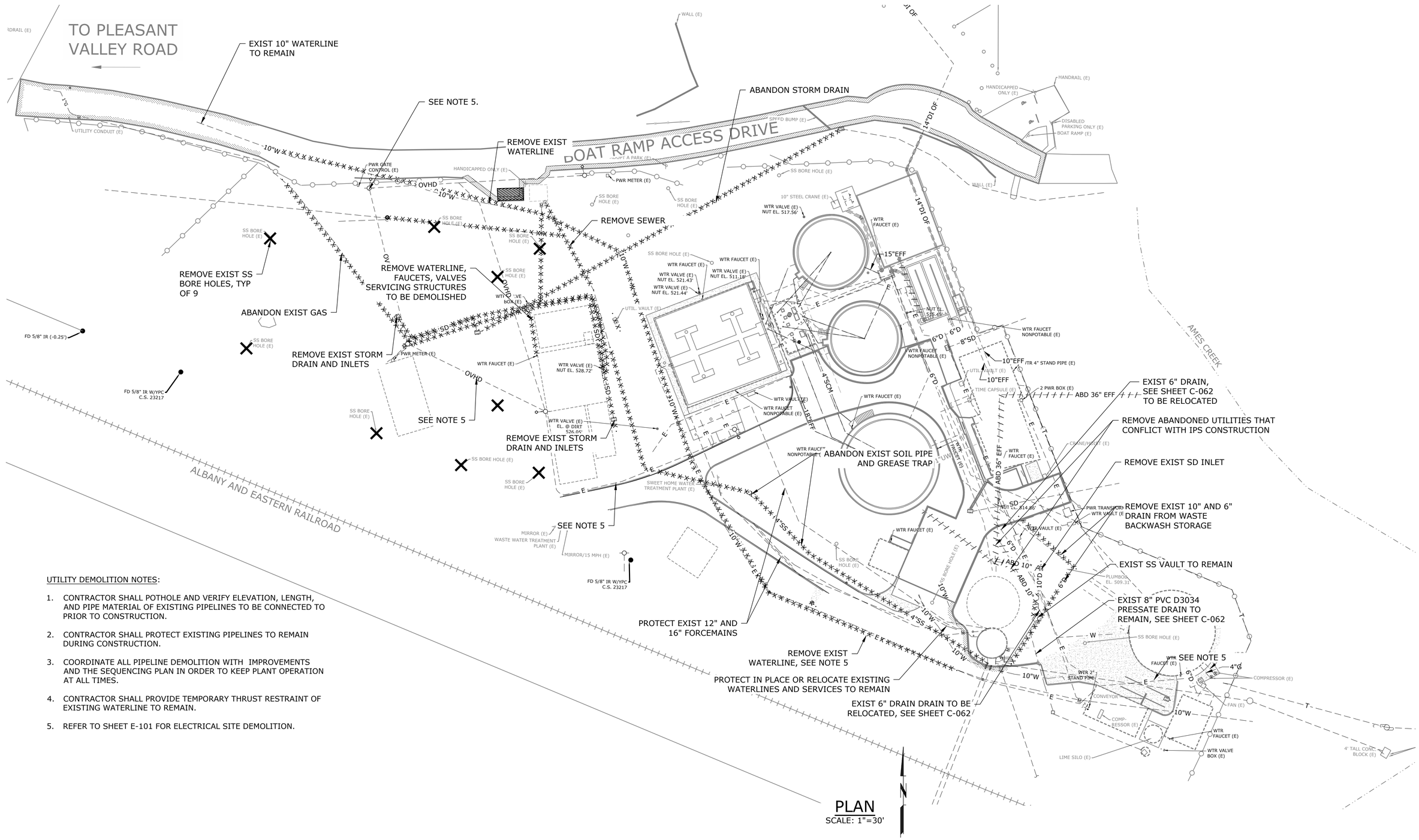

PLAN
SCALE: 1"=30'

UTILITY DEMOLITION NOTES:

1. CONTRACTOR SHALL POTHOLE AND VERIFY ELEVATION, LENGTH, AND PIPE MATERIAL OF EXISTING PIPELINES TO BE CONNECTED TO PRIOR TO CONSTRUCTION.
2. CONTRACTOR SHALL PROTECT EXISTING PIPELINES TO REMAIN DURING CONSTRUCTION.
3. COORDINATE ALL PIPELINE DEMOLITION WITH IMPROVEMENTS AND THE SEQUENCING PLAN IN ORDER TO KEEP PLANT OPERATION AT ALL TIMES.
4. CONTRACTOR SHALL PROVIDE TEMPORARY THRUST RESTRAINT OF EXISTING WATERLINE TO REMAIN.
5. REFER TO SHEET E-101 FOR ELECTRICAL SITE DEMOLITION.

NO.	DATE	BY	REVISION

NOTICE
0 ½ 1
IF THIS BAR DOES NOT MEASURE 1" THEN DRAWING IS NOT TO SCALE

BVB DESIGNED
BVB DRAWN
WJM CHECKED

REGISTERED PROFESSIONAL ENGINEER
DocuSigned by: Brooke Barry 859B3BF... 8/12/2022
NOV. 14, 2017
BROOKE VICTORIA BARRY
EXPIRES : 12/31/2023

WEST YOST
Water. Engineered.

Sweet Home Oregon at its best!

MAHLER WATER RECLAMATION FACILITY IMPROVEMENTS PROJECT PHASE 1

UTILITY DEMOLITION PLAN

PROJECT NO.: 936-50-21-09 | SCALE: AS SHOWN | DATE: AUGUST 2022

SHEET C-021

P:\Clients\936 City Of Sweet Home\50-21-09 WWTP Phase 1 Final Design\CAD\Production\19-2605-OR-C-UTIL-DEMO.dwg C-021 7/21/2022 1:49 PM BBARRY 24.1s (LMS Tech)

DocuSign Envelope ID: 09934EE9-0C55-40A3-8631-9C0AF6797111

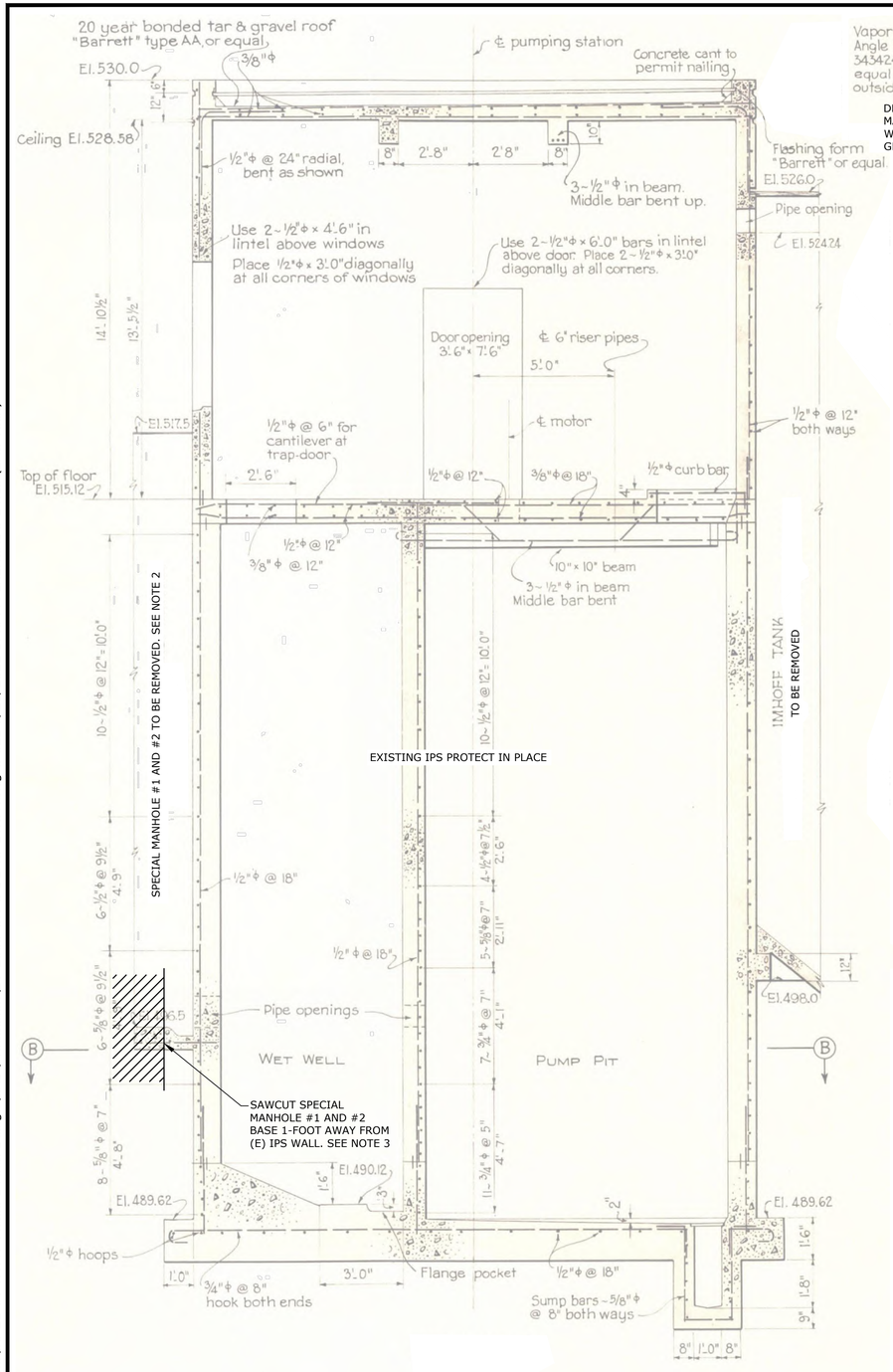

EXISTING IPS SECTION VIEW

SCALE: NTS

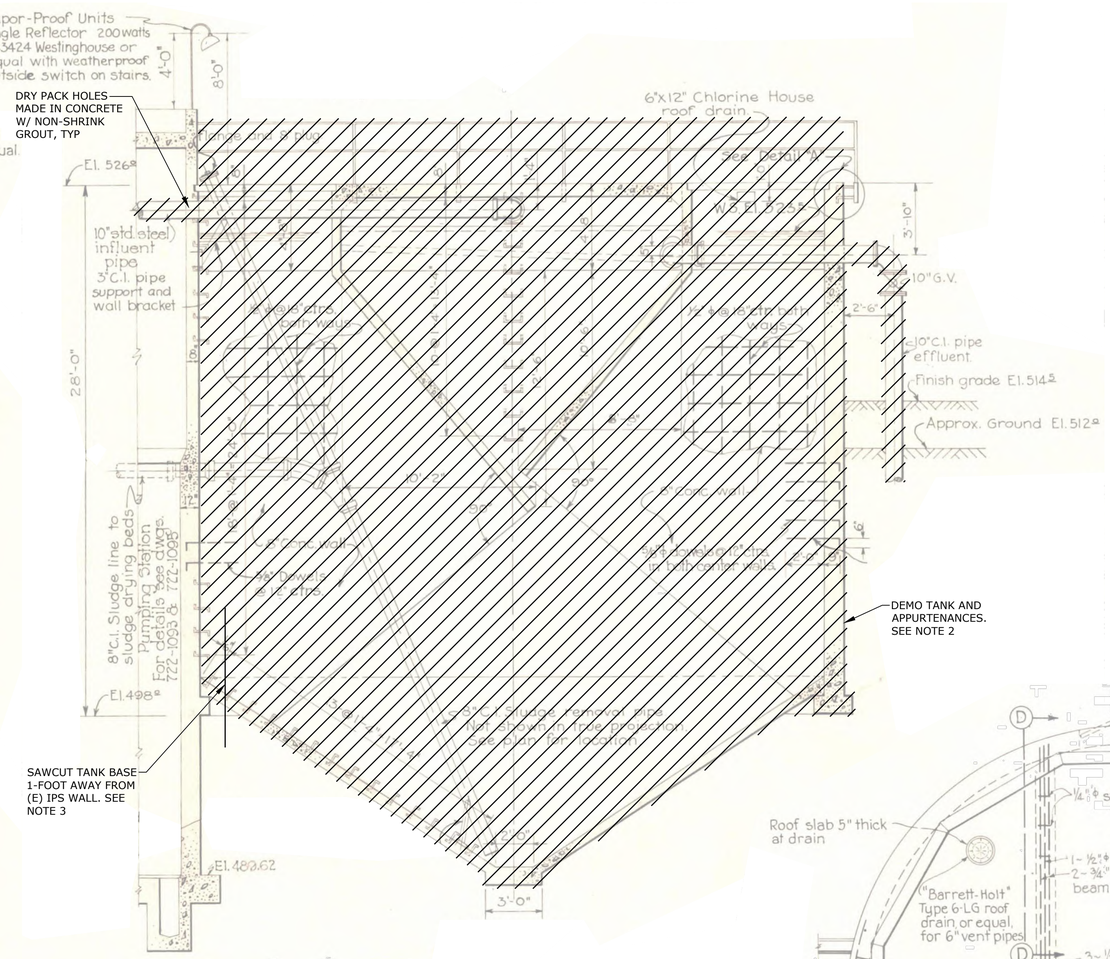

EXISTING BACKWASH STORAGE/ IMHOFF TANK SECTION VIEW

SCALE: NTS

NOTES:

1. DEPICTIONS OF EXISTING IPS AND BACKWASH STORAGE/IMHOFF TANK ON THIS SHEET ARE FROM THE 1947 RECORD DRAWINGS. UPGRADES TO THE IPS HAVE OCCURRED AFTER 1947.
2. PROTECT EXISTING IPS DURING DEMOLITION OF SPECIAL MANHOLES #1 AND #2 AND IMHOFF TANK.
3. AFTER SAWCUTTING, COAT EXPOSED REBAR WITH A 2-PART CEMENTITIOUS EPOXY COATING.

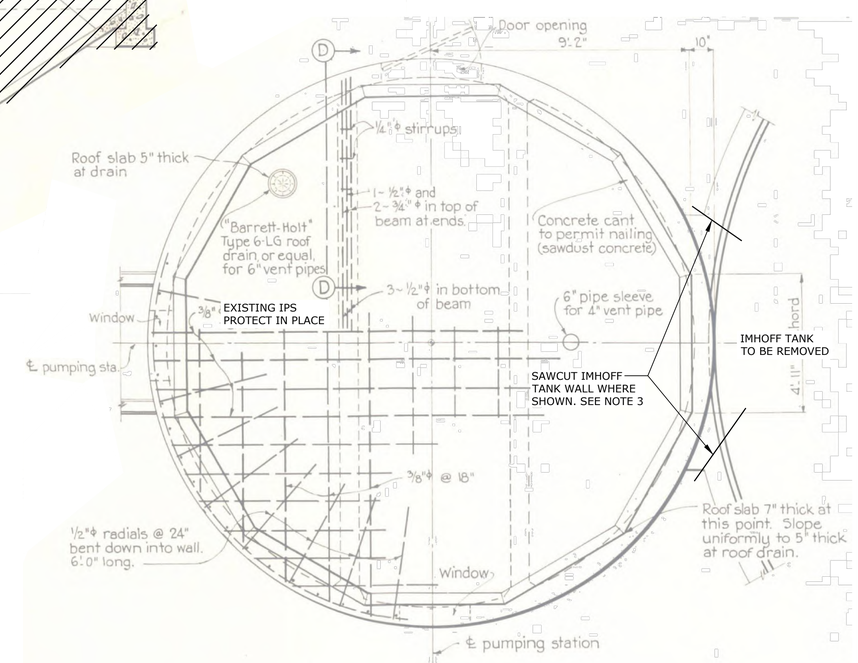

EXISTING IPS ROOF PLAN

SCALE: NTS

NO.	DATE	BY	REVISION

NOTICE
0 ½ 1
IF THIS BAR DOES NOT MEASURE 1" THEN DRAWING IS NOT TO SCALE

BVB DESIGNED
BVB DRAWN
WJM CHECKED

REGISTERED PROFESSIONAL ENGINEER BRIOCHE VICTORIA BARRY
EXPIRES : 12/31/2023

WEST YOST
Water. Engineered.

Sweet Home Oregon at its best!

MAHLER WATER RECLAMATION FACILITY IMPROVEMENTS PROJECT PHASE 1

BACKWASH STORAGE/IMHOFF TANK DEMOLITION

PROJECT NO.: 936-50-21-09 | SCALE: AS SHOWN | DATE: AUGUST 2022

SHEET C-022

18 of 135

P:\Clients\936 City Of Sweet Home\50-21-09 WWTP Phase 1 Final Design\CAD\Production\19-2605-OR-C-DEMO-BWST.dwg C-022 7/21/2022 1:46 PM LKERCADO 24.1s (LMS Tech)

DocuSign Envelope ID: 09934EE9-0C55-40A3-8631-9C0AF6797111

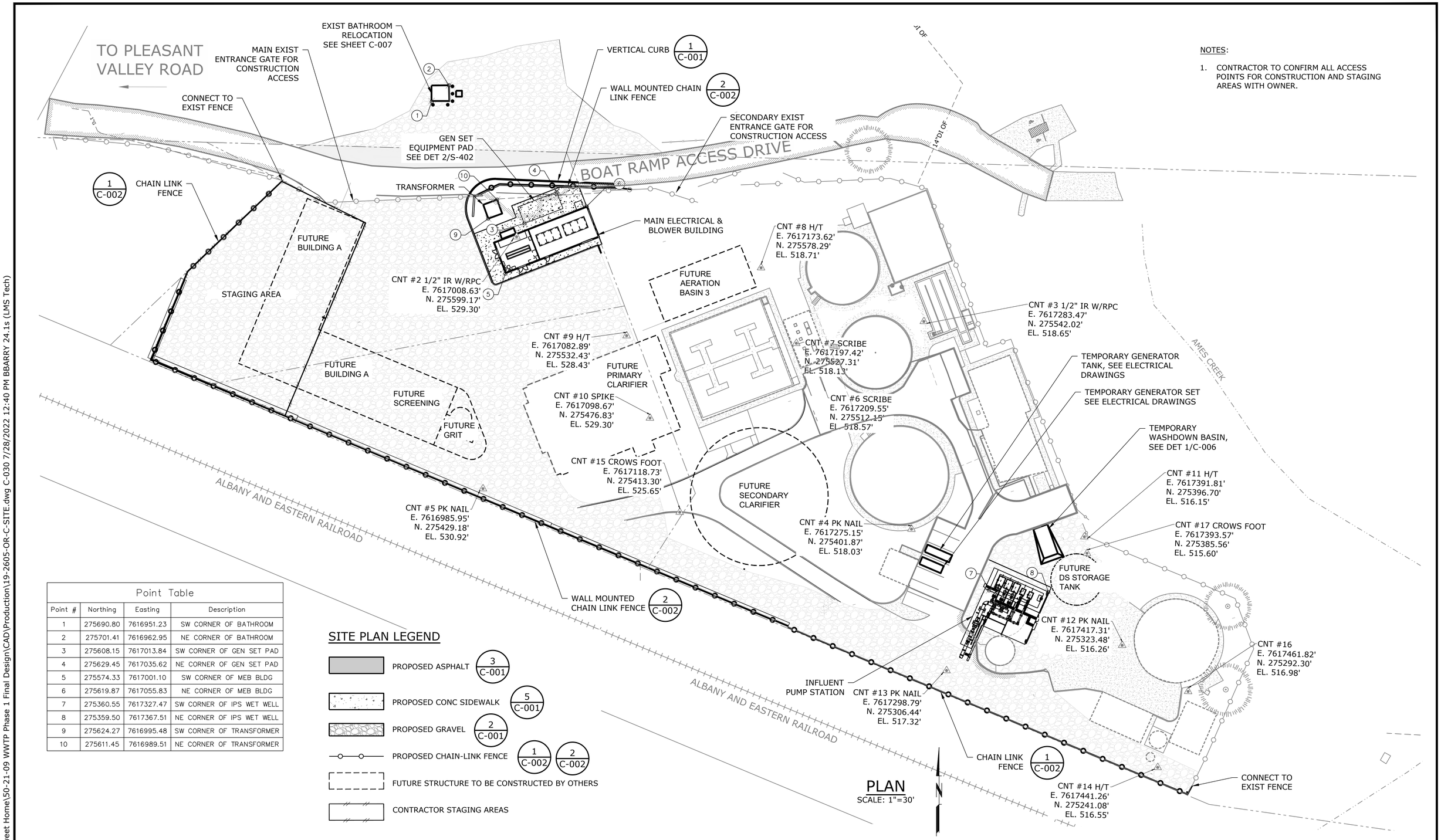

NOTES:

1. CONTRACTOR TO CONFIRM ALL ACCESS POINTS FOR CONSTRUCTION AND STAGING AREAS WITH OWNER.

Point Table			
Point #	Northing	Easting	Description
1	275690.80	7616951.23	SW CORNER OF BATHROOM
2	275701.41	7616962.95	NE CORNER OF BATHROOM
3	275608.15	7617013.84	SW CORNER OF GEN SET PAD
4	275629.45	7617035.62	NE CORNER OF GEN SET PAD
5	275574.33	7617001.10	SW CORNER OF MEB BLDG
6	275619.87	7617055.83	NE CORNER OF MEB BLDG
7	275360.55	7617327.47	SW CORNER OF IPS WET WELL
8	275359.50	7617367.51	NE CORNER OF IPS WET WELL
9	275624.27	7616995.48	SW CORNER OF TRANSFORMER
10	275611.45	7616989.51	NE CORNER OF TRANSFORMER

SITE PLAN LEGEND

- PROPOSED ASPHALT 3 C-001
- PROPOSED CONC SIDEWALK 5 C-001
- PROPOSED GRAVEL 2 C-001
- PROPOSED CHAIN-LINK FENCE 1 C-002 2 C-002
- FUTURE STRUCTURE TO BE CONSTRUCTED BY OTHERS
- CONTRACTOR STAGING AREAS

NO.	DATE	BY	REVISION

NOTICE
0 ½ 1
IF THIS BAR DOES NOT MEASURE 1" THEN DRAWING IS NOT TO SCALE

BVB DESIGNED
BVB DRAWN
WJM CHECKED

REGISTERED PROFESSIONAL ENGINEER — OREGON — NOV 14, 2017 — BROOKE VICTORIA BARRY — EXPIRES : 12/31/2023

WEST YOST
Water. Engineered.

Sweet Home Oregon ...at its best!

MAHLER WATER RECLAMATION FACILITY IMPROVEMENTS PROJECT PHASE 1

OVERALL SITE PLAN, STRUCTURE COORDINATES, STAGING AND ACCESS, SURVEY CONTROL POINTS

PROJECT NO.: 936-50-21-09 | SCALE: AS SHOWN | DATE: AUGUST 2022

SHEET C-030

P:\Clients\936 City Of Sweet Home\50-21-09 WWTP Phase 1 Final Design\CAD\Production\19-2605-OR-C-SITE.dwg C-030 7/28/2022 12:40 PM BBARRY 24.1s (LMS Tech)

DocuSign Envelope ID: 09934EE9-0C55-40A3-8631-9C0AF6797111

EROSION CONTROL NOTES

1. CONTRACTOR TO OBTAIN PERMITS FOR STORMWATER MANAGEMENT DURING CONSTRUCTION INCLUDING 1200C STORMWATER DISCHARGE PERMIT.
2. SWEEP STREETS AS NEEDED OR WHEN DIRECTED BY OWNER OR OWNER'S REPRESENTATIVE.
3. PRIOR TO ANY GROUND DISTURBANCE ON THE SITE, ALL NECESSARY APPROVALS SHALL BE OBTAINED.
4. ISSUANCE OF AN EROSION PREVENTION PERMIT APPROVES PROTECTION MEASURES, NOT CONSTRUCTION OR GROUND DISTURBING ACTIVITIES. IT DOES NOT RELIEVE THE CONTRACTOR FROM OTHER PERMITTING REQUIREMENTS. OTHER PERMITS MAY BE REQUIRED.
5. CONSTRUCTION SHALL CONFORM TO THE CURRENT EDITION OF THE OREGON STANDARD SPECIFICATIONS FOR CONSTRUCTION.
6. EROSION AND SEDIMENT CONTROL MEASURES, AND OTHER NATURAL RESOURCE PROTECTION FENCING AND BARRIERS, SHOWN ON THE EROSION CONTROL PLAN (ECP) ARE THE MINIMUM REQUIREMENTS FOR ANTICIPATED SITE CONDITIONS. DURING CONSTRUCTION, MEASURES SHALL BE UPGRADED, AS NEEDED OR AS DIRECTED BY THE CITY OR ENGINEER.
7. CONSTRUCTION, MAINTENANCE, REPLACEMENT, AND UPGRADING OF EROSION AND SEDIMENT CONTROL MEASURES AND PROTECTION FENCING IS THE RESPONSIBILITY OF THE CONTRACTOR UNTIL ALL CONSTRUCTION IS COMPLETED AND APPROVED.
8. BOUNDARIES OF THE CLEARING AND GRADING LIMITS SHALL BE WITHIN THE SEDIMENT FENCED AREA AND SHALL BE CLEARLY FLAGGED IN THE FIELD PRIOR TO CONSTRUCTION. DURING CONSTRUCTION, NO DISTURBANCE BEYOND THE FLAGGED CLEARING AND GRADING LIMITS SHALL BE PERMITTED. THE FLAGGING SHALL BE MAINTAINED BY THE CONTRACTOR FOR THE DURATION OF CONSTRUCTION. IN ADDITION, WETLAND AND RIPARIAN AREAS SHALL BE IDENTIFIED AND PROTECTED WITH APPROPRIATE FENCING PRIOR TO CONSTRUCTION AND SHALL NOT BE DISTURBED UNLESS THE PROPER PERMITS ARE OBTAINED.
9. EROSION AND SEDIMENT CONTROL MEASURES MUST BE CONSTRUCTED IN CONJUNCTION WITH ALL CLEARING AND GRADING ACTIVITIES, IN SUCH A MANNER AS TO ENSURE THAT SEDIMENT AND SEDIMENT LADEN WATER DOES NOT ENTER WATERWAYS, THE STORMWATER SYSTEM, ROADWAYS, ADJACENT PROPERTY OR VIOLATE APPLICABLE WATER QUALITY STANDARDS. WHEN DESIGNING AND IMPLEMENTING MEASURES, THE CONTRACTOR SHALL CONSIDER THE SEASONAL VARIATION OF RAINFALL, TEMPERATURE, AND OTHER CLIMATIC FACTORS RELATIVE TO THE TIMING OF LAND DISTURBANCE ACTIVITIES.
10. EROSION AND SEDIMENT CONTROL MEASURES ON ACTIVE SITES SHALL BE INSPECTED AND MAINTAINED DAILY AND WITHIN 24 HOURS AFTER ANY STORM EVENT GREATER THAN 0.5 INCHES OF RAIN PER 24 HOUR PERIOD. ANY REQUIRED REPAIRS OR ADJUSTMENTS SHALL BE MADE IMMEDIATELY. THE EROSION AND SEDIMENT CONTROL MEASURES ON INACTIVE SITES SHALL BE INSPECTED A MINIMUM OF ONCE EVERY MONTH AND/OR WITHIN 48 HOURS FOLLOWING STORM EVENTS. ADDITIONALLY, SITES COVERED UNDER DEPARTMENT OF ENVIRONMENTAL QUALITY (DEQ) PERMITS (1200–C, 1200–CN) MUST COMPLY WITH THOSE PERMIT MONITORING AND RECORD–KEEPING REQUIREMENTS.
11. DURING THE WET WEATHER SEASON (OCTOBER 15 TO APRIL 30), ALL EXPOSED SOIL AND STOCKPILE AREAS SHALL BE COVERED, OR OTHERWISE PROTECTED BY A FACILITY (OR COMBINATION OF FACILITIES) THAT RESULT IN NO STORMWATER RUNOFF LEAVING THE SITE DURING A 5–YEAR STORM EVENT.
12. ALL ADJACENT PROPERTIES, WATER FEATURES, AND RELATED NATURAL RESOURCES ARE TO BE KEPT FREE OF DEPOSITS OR DISCHARGES OF SOIL, SEDIMENT OR CONSTRUCTION–RELATED MATERIAL FROM THE CONSTRUCTION SITE.
13. ALL EROSION AND SEDIMENT CONTROL MEASURES SHALL BE PROTECTED FROM DAMAGE AT ALL TIMES. EROSION CONTROL MEASURES SHALL REMAIN IN PLACE UNTIL VEGETATION HAS BEEN ESTABLISHED AND THE SITE IS PERMANENTLY STABILIZED. ANY MEASURES THAT ARE DAMAGED OR DESTROYED SHALL BE REPAIRED OR REPLACED IMMEDIATELY.
14. STABILIZE ALL DISTURBED AREAS WITHIN 50 FEET OF WATERWAYS, WETLANDS OR OTHER SENSITIVE AREAS WITHIN 7 DAYS OF EXPOSURE.
15. STREETS ADJACENT TO CONSTRUCTION ENTRANCES AND ALONG HAUL ROUTES SHALL BE SWEPT AS NEEDED OR WHEN DIRECTED BY THE CITY TO ENSURE PUBLIC RIGHTS–OF–WAY ARE KEPT CLEAN AND FREE OF DEBRIS.
16. WHEN TRUCKING SATURATED SOILS TO OR FROM THE SITE, WATER–TIGHT TRUCKS SHALL BE USED. SEDIMENT LADEN WATER WILL NOT BE ALLOWED TO ENTER THE STORMWATER SYSTEM.
17. EXTRACTED GROUND WATER FROM EXCAVATED TRENCHES SHALL BE DISPOSED OF IN A SUITABLE MANNER WITHOUT DISCHARGING SEDIMENT TO ADJACENT PROPERTIES, THE CITY'S STORMWATER SYSTEM, WATER FEATURES, OR RELATED NATURAL RESOURCES. DEWATERING SYSTEMS SHALL BE DESIGNED AND OPERATED SO AS TO PREVENT REMOVAL OF THE NATURAL SOILS AND SO THAT THE GROUNDWATER LEVEL OUTSIDE THE EXCAVATION IS NOT REDUCED TO THE EXTENT THAT WOULD DAMAGE OR ENDANGER ADJACENT STRUCTURES OR PROPERTY. APPROVAL OF THE DEWATERING SYSTEM DOES NOT GUARANTEE THAT IT WILL MEET THE OUTCOMES OR BE ACCEPTABLE FOR USE IN ALL SITUATIONS. MODIFICATIONS TO THE SYSTEM WILL BE REQUIRED IF THE OUTCOMES CANNOT BE MET. AT NO TIME WILL SEDIMENT LADEN WATER BE ALLOWED TO LEAVE THE CONSTRUCTION SITE.
18. A SUPPLY OF MATERIALS NECESSARY TO MEET THE OUTCOMES AND IMPLEMENT THE EROSION PRACTICES UNDER ALL WEATHER CONDITIONS SHALL BE MAINTAINED AT ALL TIMES ON THE CONSTRUCTION SITE.
19. NO HAZARDOUS SUBSTANCES, SUCH AS PAINTS, THINNERS, FUELS AND OTHER CHEMICALS SHALL BE RELEASED ONTO THE SITE, ADJACENT PROPERTIES, OR INTO WATER FEATURES, THE STORMWATER SYSTEM, OR RELATED NATURAL RESOURCES.
20. NO DISCHARGE INTO THE STORMWATER SYSTEM OR RELATED NATURAL RESOURCES OF CONSTRUCTION RELATED CONTAMINANTS RESULTING FROM ACTIVITIES SUCH AS, BUT NOT LIMITED TO, CONCRETE SAWING, CLEANING OR WASHING OF EQUIPMENT, TOOLS, OR VEHICLES, SHALL OCCUR.
21. IT IS THE RESPONSIBILITY OF THE CONTRACTOR TO ENSURE ALL WORK PERFORMED BY UTILITY COMPANIES FOR THIS PROJECT, INCLUDING PLACEMENT OF APPROPRIATE EROSION AND SEDIMENT CONTROL MEASURES, FINISHED GRADING, SEEDING, MULCHING AND CLEAN UP MEETS THE REQUIREMENTS OF THE PERMIT.
22. INSTALL ADDITIONAL EROSION CONTROL DEVICES SUCH AS CHECK DAMS, TIRE WASH FACILITIES, AS NEEDED TO MEET EROSION CONTROL REQUIREMENTS.
23. REFER TO EROSION CONTROL DETAILS ON C–042.

MATERIAL DELIVERY AND STORAGE

1. TEMPORARY STORAGE AREA SHALL BE LOCATED AWAY FROM VEHICULAR TRAFFIC.
2. MATERIAL SAFETY DATA SHEETS (MSDS) SHALL BE SUPPLIED FOR ALL MATERIALS STORED.
3. ALL MATERIAL DELIVERY AND STORAGE SHALL TAKE PLACE WITHIN THE DESIGNATED STAGING AREAS.
4. STORAGE OF REACTIVE, IGNITABLE, OR FLAMMABLE LIQUIDS MUST COMPLY WITH LOCAL FIRE CODES.
5. HAZARDOUS MATERIALS STORAGE ONSITE SHALL BE MINIMIZED.
6. HAZARDOUS MATERIALS SHALL BE HANDLED AS INFREQUENTLY AS POSSIBLE.
7. DURING THE RAINY SEASON, MATERIALS SHALL BE STORED IN A COVERED AREA. STORE MATERIALS IN SECONDARY CONTAINMENTS SUCH AS EARTHEN DIKE, HORSE TROUGH, OR EVEN A CHILDREN'S WADING POOL FOR NON – REACTIVE MATERIALS SUCH AS DETERGENTS, OIL, GREASE, AND PAINTS. SMALL AMOUNTS OF MATERIAL MAY BE SECONDARILY CONTAINED IN CONCRETE MIXING TRAYS.
8. DO NOT STORE CHEMICALS, DRUMS, OR BAGGED MATERIALS DIRECTLY ON THE GROUND. PLACE THESE ITEMS ON A PALLET AND, WHEN POSSIBLE, IN SECONDARY CONTAINMENT.
9. IF DRUMS MUST BE KEPT UNCOVERED, USE DOMED PLASTIC COVERS OR STORE THEM AT A SLIGHT ANGLE TO REDUCE PONDING OF RAINWATER ON THE LIDS TO REDUCE CORROSION.
10. CHEMICALS SHALL BE KEPT IN THEIR ORIGINAL LABELED CONTAINERS.
11. EMPLOYEES AND SUBCONTRACTORS SHALL BE TRAINED ON THE PROPER MATERIAL DELIVERY AND STORAGE PRACTICES.
12. EMPLOYEES TRAINED IN EMERGENCY SPILL CLEANUP PROCEDURES MUST BE PRESENT WHEN DANGEROUS MATERIALS OR LIQUID CHEMICALS ARE UNLOADED.
13. COVER AND BERM LOOSE STOCKPILED CONSTRUCTION MATERIALS THAT ARE NOT ACTIVELY BEING USED SUCH AS SOILS, SPOILS, AGGREGATE, FLY–ASH, STUCCO AND HYDRATED LIME.
14. IMPLEMENT BMPs TO PREVENT THE OFF–SITE TRACKING OF LOOSE CONSTRUCTION AND LANDSCAPE MATERIALS.
15. DISCONTINUE THE APPLICATION OF ANY ERODIBLE LANDSCAPE MATERIAL WITHIN 2 DAYS BEFORE A FORECASTED RAIN EVENT OR DURING PERIODS OF PRECIPITATION. APPLY ERODIBLE LANDSCAPE MATERIALS AT QUANTITIES AND APPLICATION RATES ACCORDING TO MANUFACTURER RECOMMENDATIONS OR BASED ON WRITTEN SPECIFICATION BY EXPERIENCED FIELD PERSONNEL.

VEHICLE AND EQUIPMENT CLEANING, FUELING AND MAINTENANCE NOTES

1. THE CONTRACTOR SHALL PERFORM ALL CLEANING OFF SITE OR CONTRACT WITH EITHER AN OFFSITE OR MOBILE COMMERCIAL WASHING BUSINESS FOR ALL NECESSARY CLEANING.
2. THE CONTRACTOR SHALL USE OFFSITE FUELING STATIONS AND REPAIR SITES AS MUCH AS POSSIBLE.
3. THE CONTRACTOR SHALL DISCOURAGE "TOPPING OFF" OF FUEL TANKS.
4. THE CONTRACTOR SHALL MAKE AVAILABLE ABSORBENT SPILL CLEANUP MATERIALS AND SPILL KITS IN FUELING AREAS AND ON FUELING TRUCKS.
5. THE CONTRACTOR SHALL USE DRIP PANS OR ABSORBENT PADS DURING VEHICLE AND EQUIPMENT FUELING AND MAINTENANCE WORK THAT INVOLVES FLUIDS.
6. THE CONTRACTOR SHALL USE ABSORBENT MATERIALS EVEN ON SMALL SPILLS. DO NOT HOSE DOWN OR BURY THE SPILL.
7. THE CONTRACTOR SHALL REMOVE THE ABSORBENT MATERIALS PROMPTLY AND DISPOSE OF PROPERLY.
8. FUELING AND MAINTENANCE SHALL TAKE PLACE ONLY IN THE DESIGNATED AREA. THE CONTRACTOR SHALL AVOID MOBILE FUELING AND MAINTENANCE OF MOBILE CONSTRUCTION EQUIPMENT AROUND THE SITE; RATHER, TRANSPORT THE EQUIPMENT TO DESIGNATED AREA.
9. THE CONTRACTOR SHALL TRAIN EMPLOYEES AND SUBCONTRACTORS IN PROPER FUELING, MAINTENANCE, AND SPILL CLEANUP PROCEDURES.
10. FUELING AND MAINTENANCE SHALL BE PERFORMED ON LEVEL–GRADE AREAS.
11. THE CONTRACTOR SHALL PROTECT FUELING AND MAINTENANCE AREAS WITH APPROPRIATE BMPs.
12. NOZZLES USED IN VEHICLE AND EQUIPMENT FUELING SHALL BE EQUIPPED WITH AN AUTOMATIC SHUTOFF TO CONTROL DRIPS. FUELING OPERATIONS SHALL NOT BE LEFT UNATTENDED.
13. THE CONTRACTOR SHALL OBSERVE FEDERAL, STATE, AND LOCAL REQUIREMENTS FOR ANY STATIONARY ABOVE GROUND STORAGE TANKS.
14. THE CONTRACTOR SHALL INSPECT ONSITE VEHICLES AND EQUIPMENT DAILY AT STARTUP FOR LEAKS, AND REPAIR IMMEDIATELY. KEEP VEHICLES AND EQUIPMENT CLEAN; DO NOT ALLOW EXCESSIVE BUILD UP OF OIL AND GREASE.
15. THE CONTRACTOR SHALL SEGREGATE AND RECYCLE WASTES, SUCH AS GREASES, USED OIL OR OIL FILTERS, ANTIFREEZE CLEANING SOLUTIONS, AUTOMOTIVE BATTERIES, HYDRAULIC AND TRANSMISSION FLUIDS. PROVIDE SECONDARY CONTAINMENT AND COVERS FOR THESE MATERIALS IF STORED ONSITE.
16. THE CONTRACTOR SHALL PROPERLY DISPOSE OF USED OILS, FLUIDS, LUBRICANTS, BATTERIES, AND SPILL CLEANUP MATERIALS.

NO.	DATE	BY	REVISION

NOTICE
0 ½ 1
IF THIS BAR DOES NOT MEASURE 1" THEN DRAWING IS NOT TO SCALE

BVB DESIGNED
BVB DRAWN
WJM CHECKED

REGISTERED PROFESSIONAL ENGINEER
85993PE
OREGON
NOV. 14, 2017
BROOKE VICTORIA BARRY
DocuSigned by: Brooke Barry B7CD2EBDA37140A...
8/2/2022
EXPIRES : 12/31/2023

WEST YOST Water. Engineered.

Sweet Home Oregon at its best!

MAHLER WATER RECLAMATION FACILITY IMPROVEMENTS PROJECT PHASE 1

EROSION CONTROL NOTES

PROJECT NO.: 936-50-21-09 | SCALE: AS SHOWN | DATE: AUGUST 2022

SHEET C-040

20 of 135

P:\Clients\936 City Of Sweet Home\50-21-09 WWTP Phase 1 Final Design\CAD\Production\19-2605-OR-C-ECP.dwg C-040 7/21/2022 1:58 PM LKERCADO 24.1s (LMS Tech)

DocuSign Envelope ID: 09934EE9-0C55-40A3-8631-9C0AF6797111

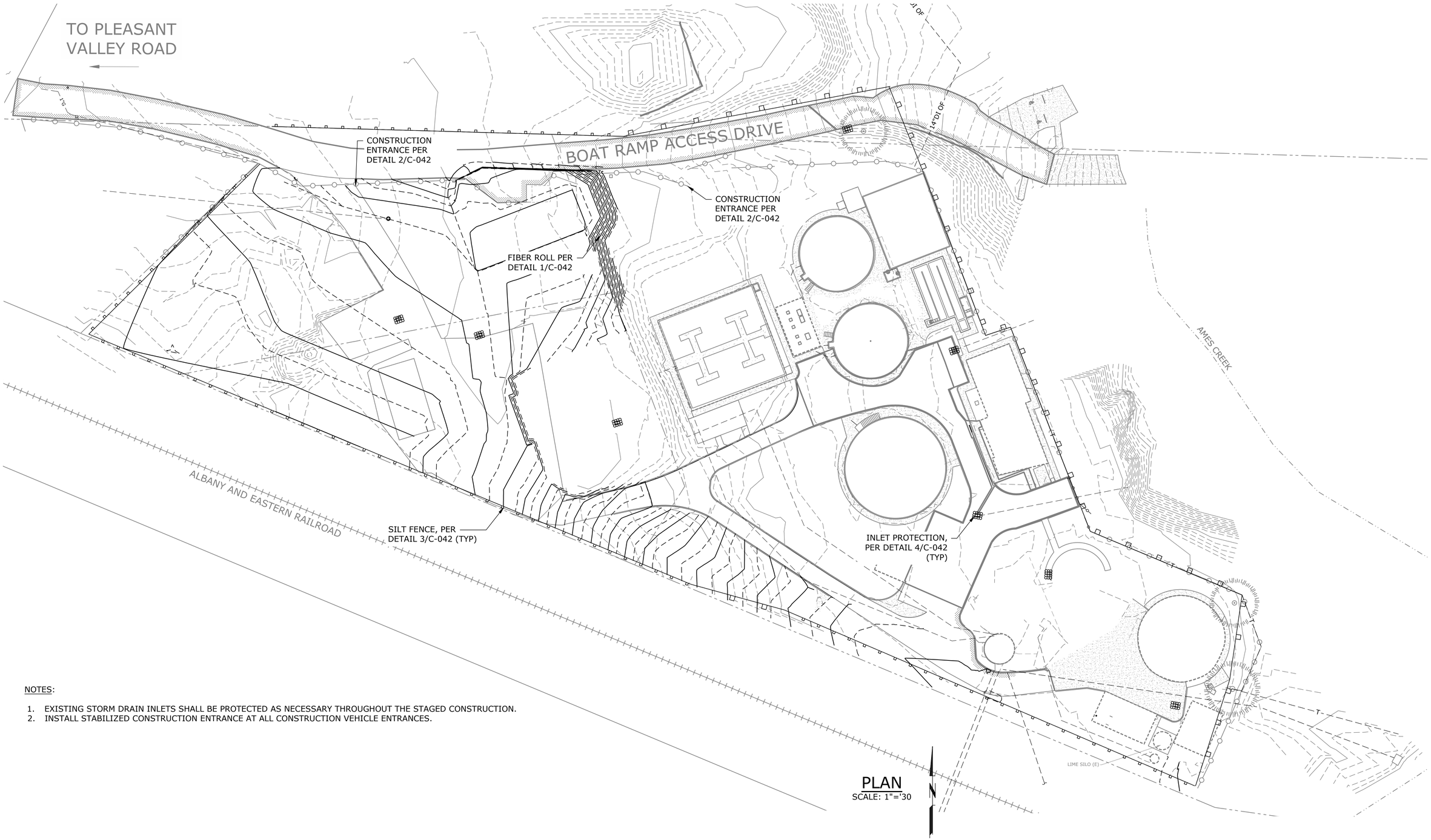

PLAN
SCALE: 1"='30

NOTES:

1. EXISTING STORM DRAIN INLETS SHALL BE PROTECTED AS NECESSARY THROUGHOUT THE STAGED CONSTRUCTION.
2. INSTALL STABILIZED CONSTRUCTION ENTRANCE AT ALL CONSTRUCTION VEHICLE ENTRANCES.

NO.	DATE	BY	REVISION

NOTICE
0 ½ 1
IF THIS BAR DOES NOT MEASURE 1" THEN DRAWING IS NOT TO SCALE

BVB DESIGNED
BVB DRAWN
WJM CHECKED

REGISTERED PROFESSIONAL ENGINEER
DocuSigned by: Brooke Barry
B5393FE
8/2/2022
OREGON
NOV. 14, 2017
BROOKE VICTORIA BARRY
EXPIRES : 12/31/2023

WEST YOST
Water. Engineered.

Sweet Home
Oregon at its best!

MAHLER WATER RECLAMATION FACILITY IMPROVEMENTS PROJECT PHASE 1

EROSION CONTROL PLAN

PROJECT NO.: 936-50-21-09 | SCALE: AS SHOWN | DATE: AUGUST 2022

SHEET
C-041
21 of 135

P:\Clients\936 City Of Sweet Home\50-21-09 WWTP Phase 1 Final Design\CAD\Production\19-2605-OR-C-ECP.dwg C-041 7/21/2022 1:58 PM LKERCADO 24.1s (LMS Tech)

DocuSign Envelope ID: 09934EE9-0C55-40A3-8631-9C0AF6797111

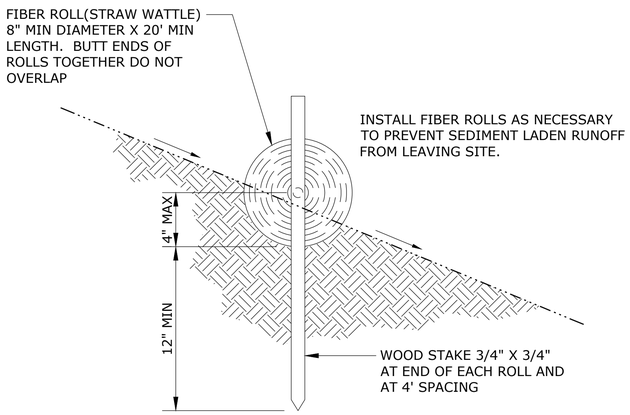

FIBER ROLL
SCALE: NTS
1 / C-041

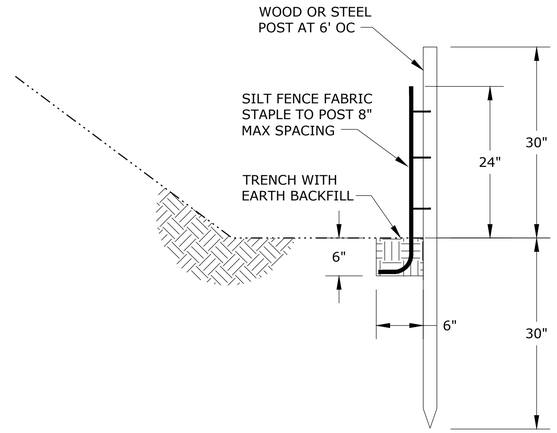

SILT FENCE
SCALE: NTS
3 / C-041

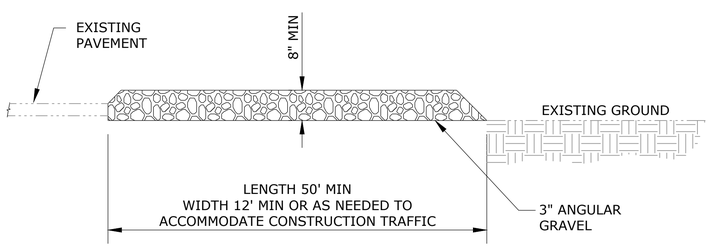

STABILIZED CONSTRUCTION ENTRANCE
SCALE: NTS
2 / C-041

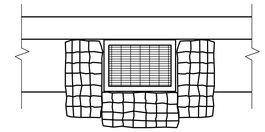

CURB INLET

NOTES:
1. REMOVE SEDIMENT FROM BEHIND BIOBAGS WHEN IT REACHES 2 INCHES IN DEPTH.
2. INSTALL INLET INSERT SEE 5 / -

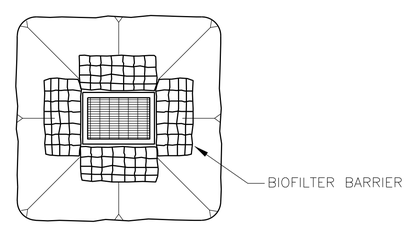

DRAIN INLET

INLET PROTECTION
SCALE: NTS
4 / C-041

NO.	DATE	BY	REVISION

NOTICE
0 ½ 1
IF THIS BAR DOES NOT MEASURE 1" THEN DRAWING IS NOT TO SCALE

BVB DESIGNED
BVB DRAWN
WJM CHECKED

REGISTERED PROFESSIONAL ENGINEER
BROOKE VICTORIA BARRY
8/20/2022
EXPIRES : 12/31/2023

WEST YOST
Water. Engineered.

Sweet Home Oregon at its best!

MAHLER WATER RECLAMATION FACILITY IMPROVEMENTS PROJECT PHASE 1

EROSION CONTROL DETAILS

PROJECT NO.: 936-50-21-09 | SCALE: AS SHOWN | DATE: AUGUST 2022

SHEET C-042

P:\Clients\936 City Of Sweet Home\50-21-09 WWTP Phase 1 Final Design\CAD\Production\19-2605-OR-C-ECP.dwg C-042 7/21/2022 1:58 PM LKERCADO 24.1s (LMS Tech)

DocuSign Envelope ID: 09934EE9-0C55-40A3-8631-9C0AF6797111

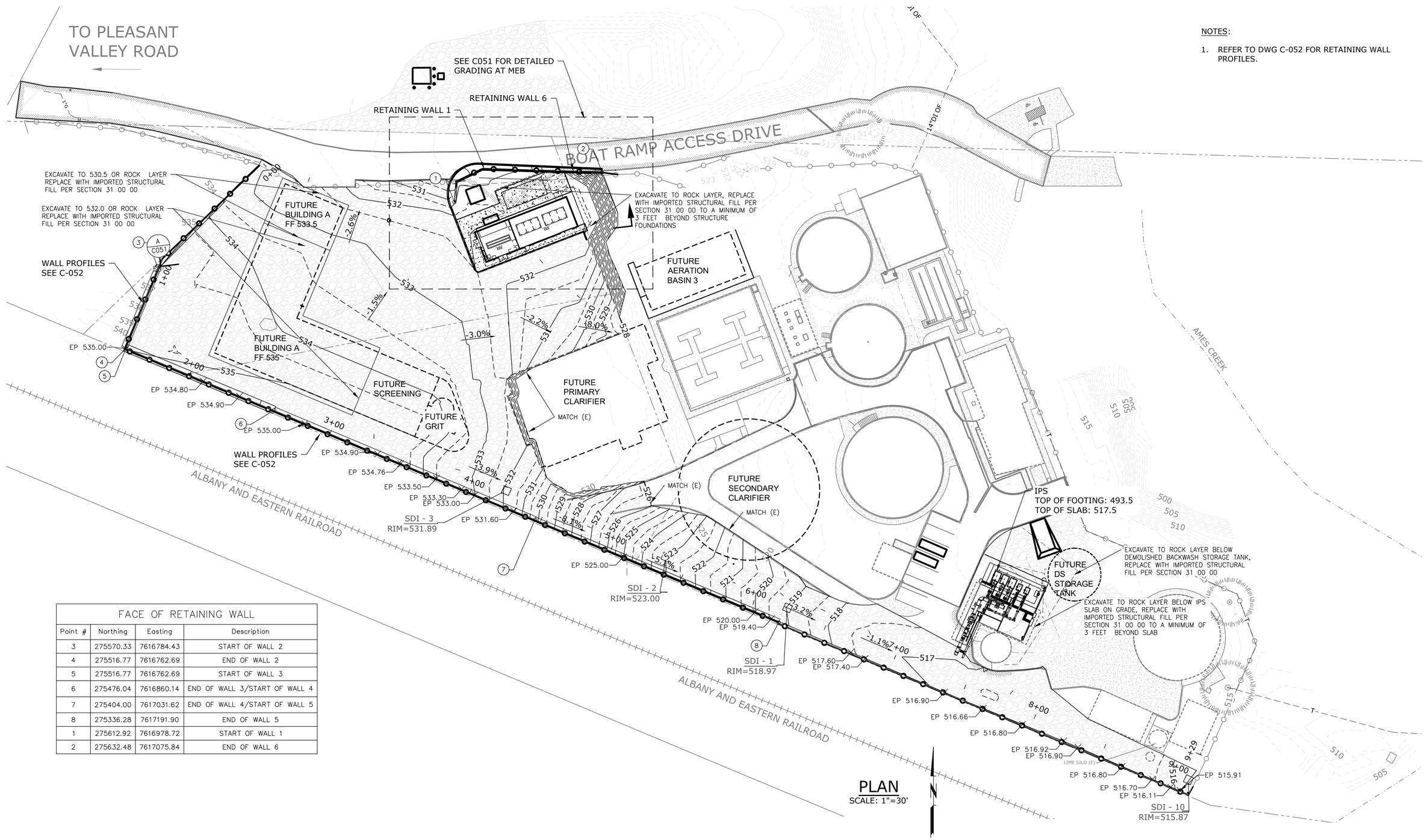

NOTES:

1. REFER TO DWG C-052 FOR RETAINING WALL PROFILES.

FACE OF RETAINING WALL

Point #	Northing	Easting	Description
3	275570.33	7616784.43	START OF WALL 2
4	275516.77	7616762.69	END OF WALL 2
5	275516.77	7616762.69	START OF WALL 3
6	275476.04	7616860.14	END OF WALL 3/START OF WALL 4
7	275404.00	7617031.62	END OF WALL 4/START OF WALL 5
8	275336.28	7617191.90	END OF WALL 5
1	275612.92	7616978.72	START OF WALL 1
2	275632.48	7617075.84	END OF WALL 6

NO.	DATE	BY	REVISION

NOTICE

0 ½ 1

IF THIS BAR DOES NOT MEASURE 1" THEN DRAWING IS NOT TO SCALE

BVB DESIGNED
BVB DRAWN
WJM CHECKED

REGISTERED PROFESSIONAL ENGINEER
DocuSigned by: 85903PE
8/29/2022
BROOKE VICTORIA BARRY
EXPIRES : 12/31/2023

WEST YOST
Water. Engineered.

Sweet Home Oregon at its best!

MAHLER WATER RECLAMATION FACILITY IMPROVEMENTS PROJECT PHASE 1

OVERALL GRADING PLAN

PROJECT NO.: 936-50-21-09 | SCALE: AS SHOWN | DATE: AUGUST 2022

SHEET C-050

23 of 135

P:\Clients\936 City Of Sweet Home\50-21-09 WWTP Phase 1 Final Design\CAD\Production\19-2605-OR-C-GRADE-BB.dwg C-050 7/28/2022 8:34 PM BBARRY 24.1s (LMS Tech)

DocuSign Envelope ID: 09934EE9-0C55-40A3-8631-9C0AF6797111

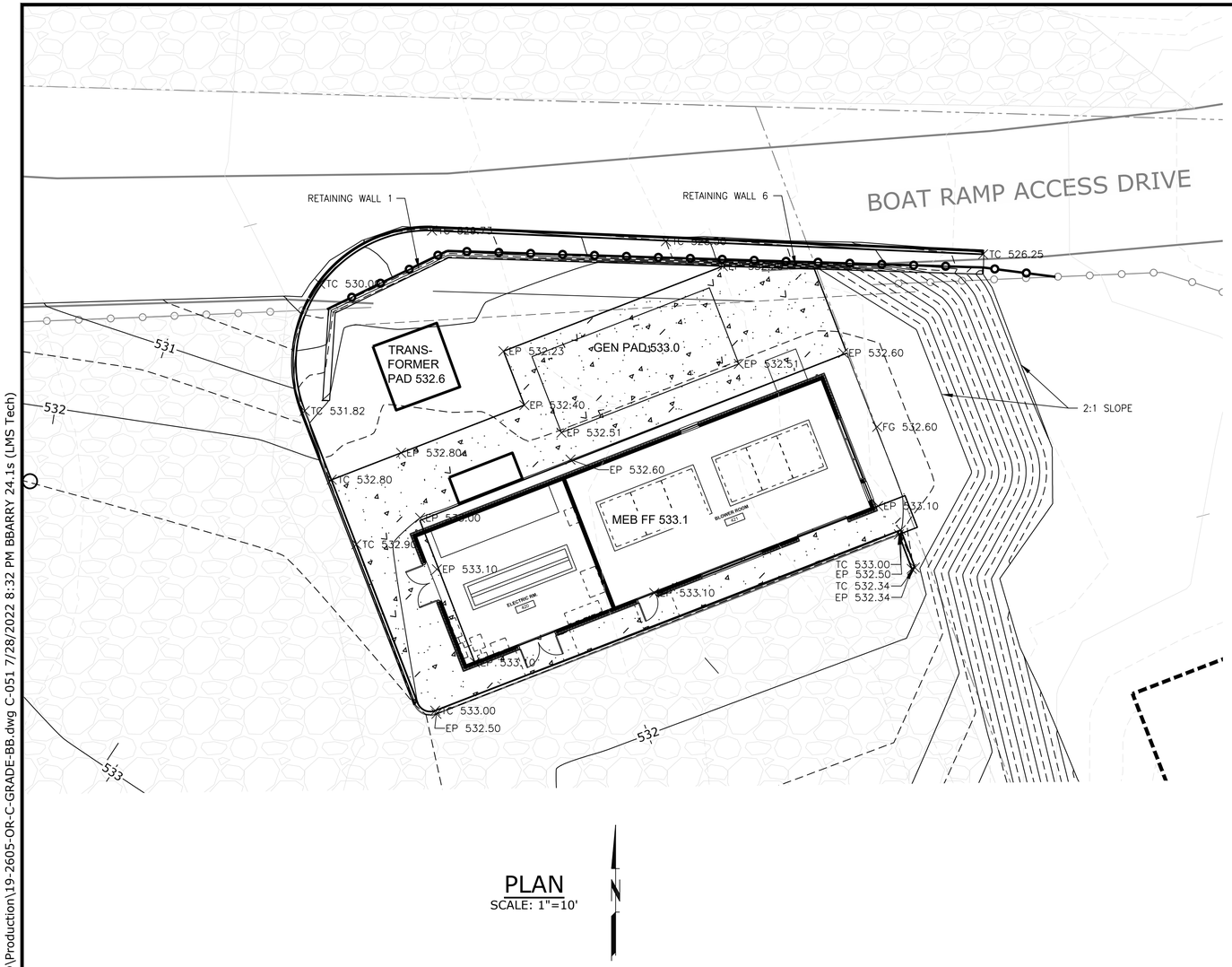

PLAN
SCALE: 1"=10'

NOTES:

1. REFER TO DWG C-052 FOR RETAINING WALL PROFILES.

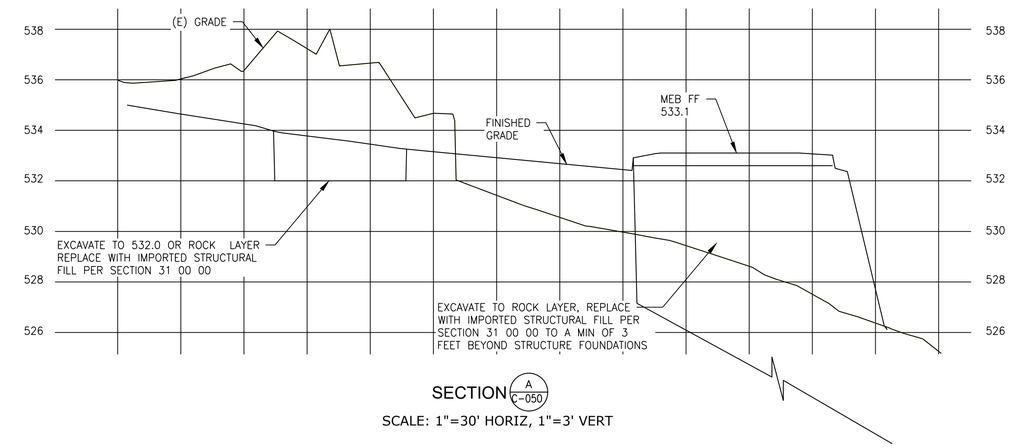

SECTION A C-050
SCALE: 1"=30' HORIZ, 1"=3' VERT

NO.	DATE	BY	REVISION

NOTICE
0 ½ 1
IF THIS BAR DOES NOT MEASURE 1" THEN DRAWING IS NOT TO SCALE

BVB DESIGNED
BVB DRAWN
WJM CHECKED

REGISTERED PROFESSIONAL ENGINEER
BROOKE VICTORIA BARRY
OREGON
NOV. 14, 2017
EXPIRES : 12/31/2023

WEST YOST
Water. Engineered.

Sweet Home
Oregon at its best!

MAHLER WATER RECLAMATION FACILITY IMPROVEMENTS PROJECT PHASE 1

MAIN ELECTRICAL & BLOWER BUILDING AREA GRADING PLAN

PROJECT NO.: 936-50-21-09 | SCALE: AS SHOWN | DATE: AUGUST 2022

SHEET
C-051

P:\Clients\936 City Of Sweet Home\50-21-09 WWTP Phase 1 Final Design\CAD\Production\19-2605-OR-C-GRADE-BB.dwg C-051 7/28/2022 8:32 PM BBARRY 24.1s (LMS Tech)

DocuSign Envelope ID: 09934EE9-0C55-40A3-8631-9C0AF6797111

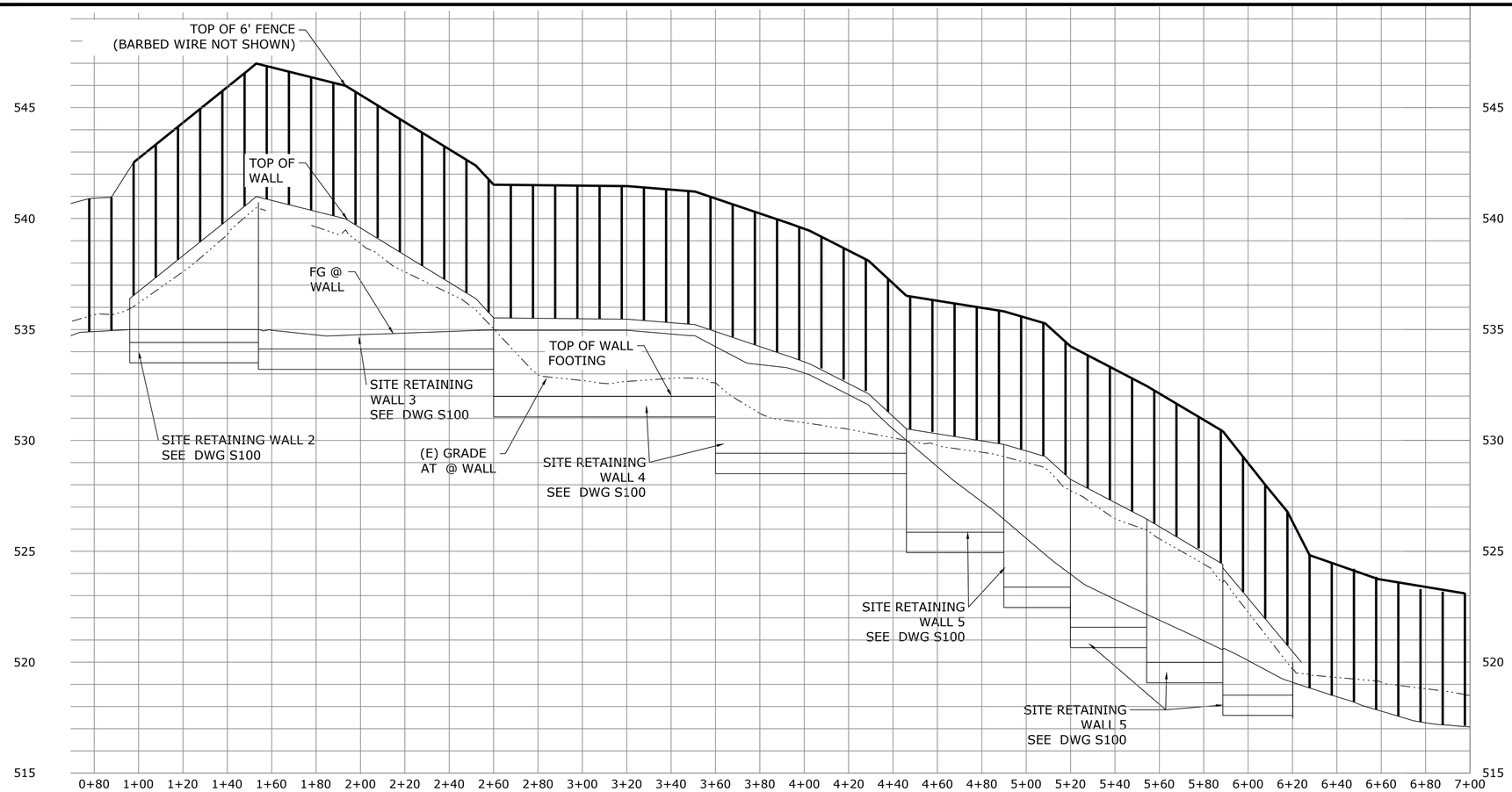

PROFILE WALLS 2-5

HORZ SCALE: 1"=30' ; VERT SCALE 1"=3'

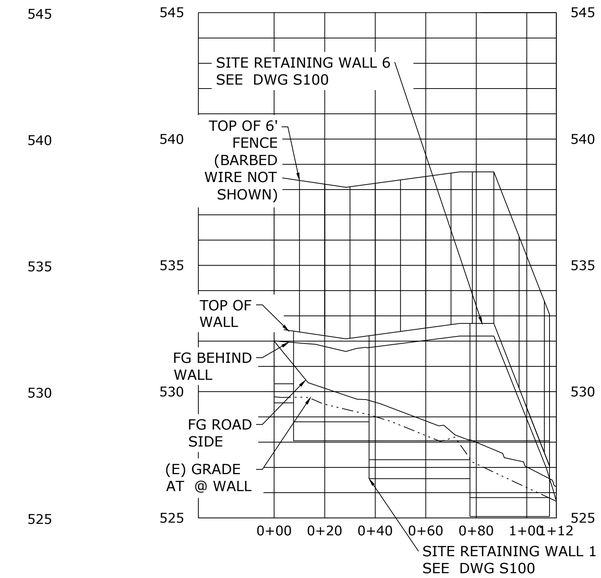

PROFILE WALLS 1 & 6

HORZ SCALE: 1"=30' ; VERT SCALE 1"=3'

P:\Clients\936 City Of Sweet Home\50-21-09 WWTP Phase 1 Final Design\CAD\Production\19-2605-OR-C-WALL-BB.dwg C-052 7/28/2022 4:09 PM BBARRY 24.1s (LMS Tech)

NO.	DATE	BY	REVISION

NOTICE

0 ½ 1

IF THIS BAR DOES NOT MEASURE 1" THEN DRAWING IS NOT TO SCALE

BVB DESIGNED

BVB DRAWN

WJM CHECKED

REGISTERED PROFESSIONAL ENGINEER DocuSigned by: Brooke Barry 85993RE OREGON 8/2/2022 NOV. 14, 2017 BROOKE VICTORIA BARRY

EXPIRES : 12/31/2023

WEST YOST Water. Engineered.

Sweet Home Oregon at its best!

MAHLER WATER RECLAMATION FACILITY IMPROVEMENTS PROJECT PHASE 1

WALL PROFILES

PROJECT NO.: 936-50-21-09 | SCALE: AS SHOWN | DATE: AUGUST 2022

SHEET C-052

25 of 135

DocuSign Envelope ID: 09934EE9-0C55-40A3-8631-9C0AF6797111

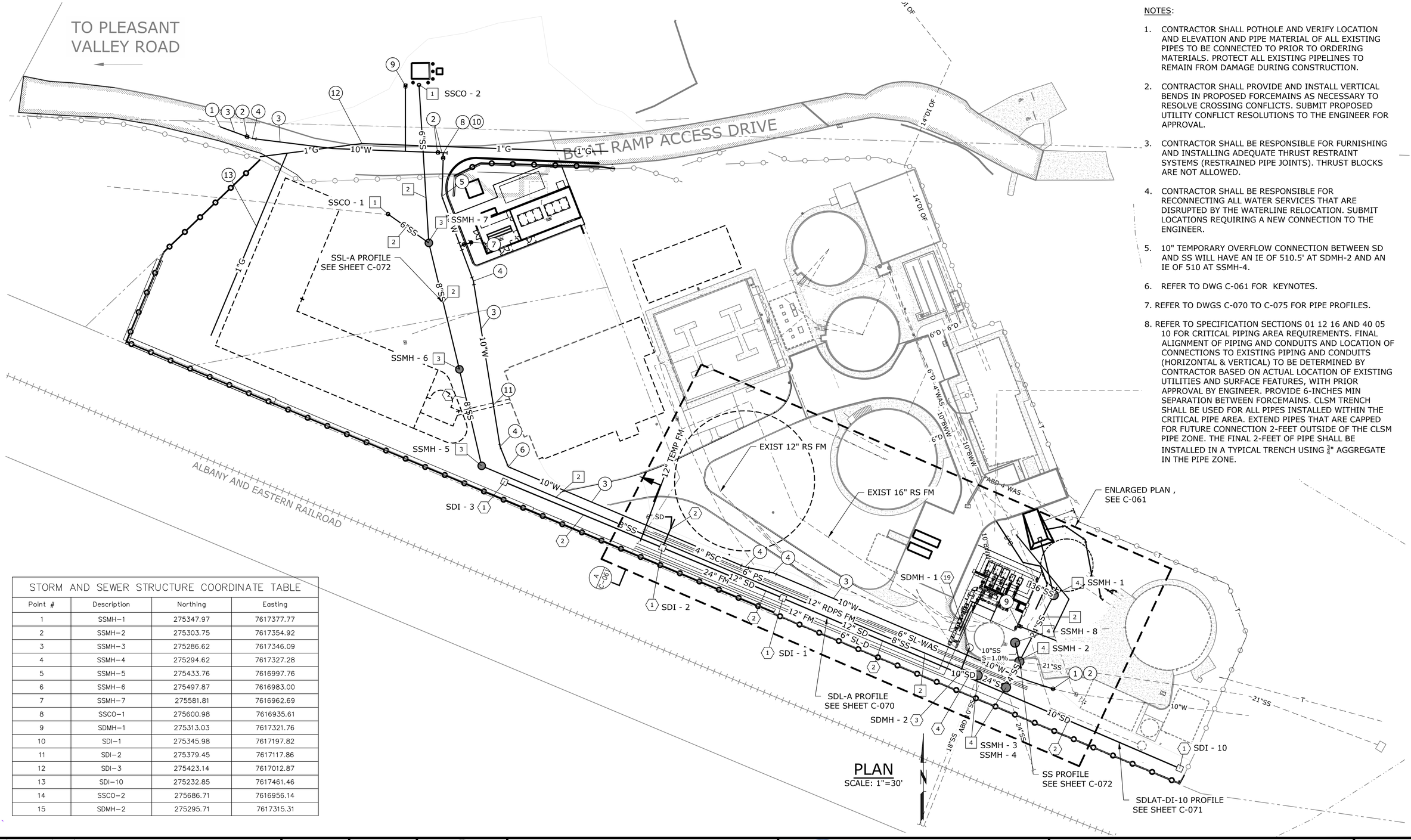

NOTES:

1. CONTRACTOR SHALL POTHOLE AND VERIFY LOCATION AND ELEVATION AND PIPE MATERIAL OF ALL EXISTING PIPES TO BE CONNECTED TO PRIOR TO ORDERING MATERIALS. PROTECT ALL EXISTING PIPELINES TO REMAIN FROM DAMAGE DURING CONSTRUCTION.
2. CONTRACTOR SHALL PROVIDE AND INSTALL VERTICAL BENDS IN PROPOSED FORCEMAINS AS NECESSARY TO RESOLVE CROSSING CONFLICTS. SUBMIT PROPOSED UTILITY CONFLICT RESOLUTIONS TO THE ENGINEER FOR APPROVAL.
3. CONTRACTOR SHALL BE RESPONSIBLE FOR FURNISHING AND INSTALLING ADEQUATE THRUST RESTRAINT SYSTEMS (RESTRAINED PIPE JOINTS). THRUST BLOCKS ARE NOT ALLOWED.
4. CONTRACTOR SHALL BE RESPONSIBLE FOR RECONNECTING ALL WATER SERVICES THAT ARE DISRUPTED BY THE WATERLINE RELOCATION. SUBMIT LOCATIONS REQUIRING A NEW CONNECTION TO THE ENGINEER.
5. 10" TEMPORARY OVERFLOW CONNECTION BETWEEN SD AND SS WILL HAVE AN IE OF 510.5' AT SDMH-2 AND AN IE OF 510 AT SSMH-4.
6. REFER TO DWG C-061 FOR KEYNOTES.
7. REFER TO DWGS C-070 TO C-075 FOR PIPE PROFILES.
8. REFER TO SPECIFICATION SECTIONS 01 12 16 AND 40 05 10 FOR CRITICAL PIPING AREA REQUIREMENTS. FINAL ALIGNMENT OF PIPING AND CONDUITS AND LOCATION OF CONNECTIONS TO EXISTING PIPING AND CONDUITS (HORIZONTAL & VERTICAL) TO BE DETERMINED BY CONTRACTOR BASED ON ACTUAL LOCATION OF EXISTING UTILITIES AND SURFACE FEATURES, WITH PRIOR APPROVAL BY ENGINEER. PROVIDE 6-INCHES MIN SEPARATION BETWEEN FORCEMAINS. CLSM TRENCH SHALL BE USED FOR ALL PIPES INSTALLED WITHIN THE CRITICAL PIPE AREA. EXTEND PIPES THAT ARE CAPPED FOR FUTURE CONNECTION 2-FEET OUTSIDE OF THE CLSM PIPE ZONE. THE FINAL 2-FEET OF PIPE SHALL BE INSTALLED IN A TYPICAL TRENCH USING $\frac{3}{4}$" AGGREGATE IN THE PIPE ZONE.

STORM AND SEWER STRUCTURE COORDINATE TABLE

Point #	Description	Northing	Easting
1	SSMH-1	275347.97	7617377.77
2	SSMH-2	275303.75	7617354.92
3	SSMH-3	275286.62	7617346.09
4	SSMH-4	275294.62	7617327.28
5	SSMH-5	275433.76	7616997.76
6	SSMH-6	275497.87	7616983.00
7	SSMH-7	275581.81	7616962.69
8	SSCO-1	275600.98	7616935.61
9	SDMH-1	275313.03	7617321.76
10	SDI-1	275345.98	7617197.82
11	SDI-2	275379.45	7617117.86
12	SDI-3	275423.14	7617012.87
13	SDI-10	275232.85	7617461.46
14	SSCO-2	275686.71	7616956.14
15	SDMH-2	275295.71	7617315.31

NO.	DATE	BY	REVISION

NOTICE
0 ½ 1
IF THIS BAR DOES NOT MEASURE 1" THEN DRAWING IS NOT TO SCALE

BVB DESIGNED
BVB DRAWN
WJM CHECKED

REGISTERED PROFESSIONAL ENGINEER
DocuSigned by: Brooke Barry
BFCD2EBDA37140...
OREGON
AUGUST 14, 2022
BROOKE VICTORIA BARRY
EXPIRES : 12/31/2023

WEST YOST
Water. Engineered.

Sweet Home Oregon at its best!

MAHLER WATER RECLAMATION FACILITY IMPROVEMENTS PROJECT PHASE 1

YARD PIPING PLAN

PROJECT NO.: 936-50-21-09 | SCALE: AS SHOWN | DATE: AUGUST 2022

SHEET
C-060
26 of 135

P:\Clients\936 City Of Sweet Home\50-21-09 WWTP Phase 1 Final Design\CAD\Production\19-2605-OR-C-SITE_YDPIPE.dwg C-060 7/28/2022 11:59 AM BBARRY 24.1s (LMS Tech)

DocuSign Envelope ID: 09934EE9-0C55-40A3-8631-9C0AF6797111

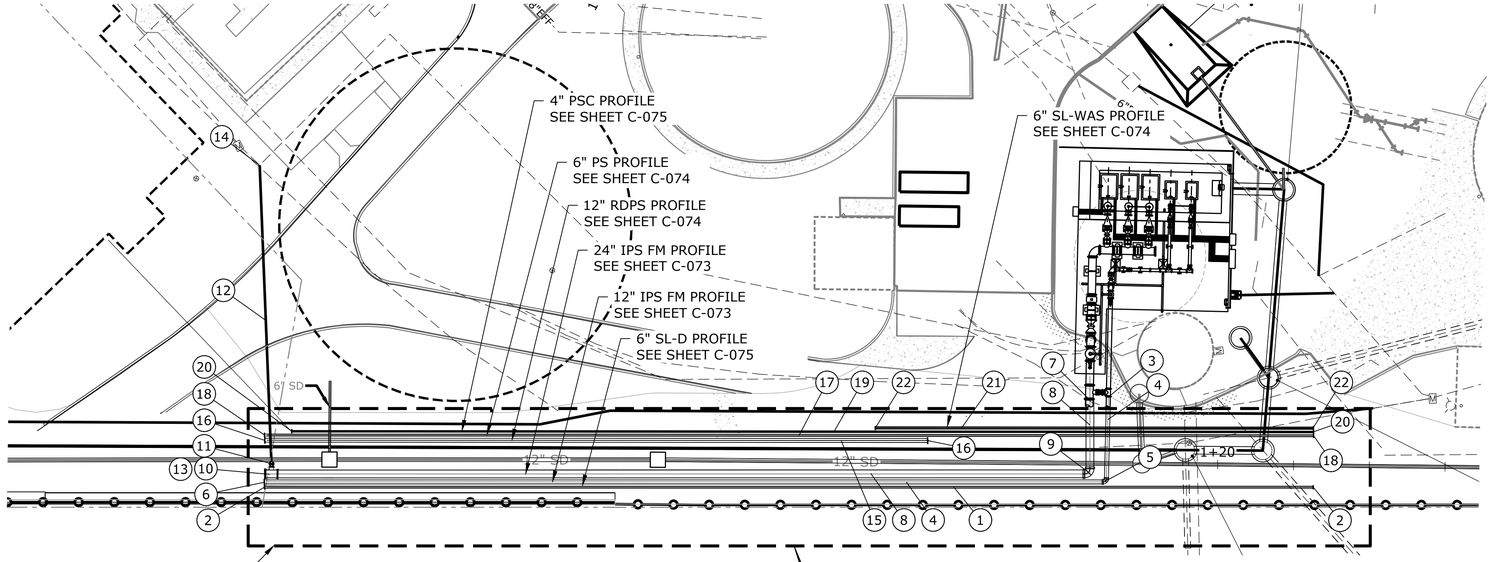

ENLARGED PLAN

SCALE: 1"=20'

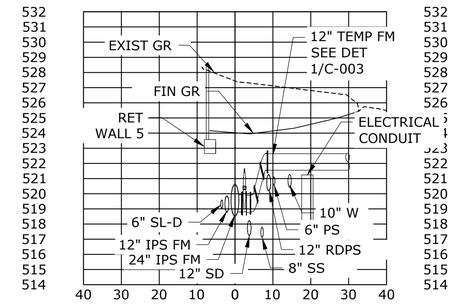

PIPELINE SECTION

SECTION A C-060

H: 1"=20' V: 1"=5'

YARD PIPING SCHEDULE (SEE DWG C-060)

10" WATERLINE RELOCATION

1. CONNECT TO EXIST WATERLINE; SEE NOTES 1-3, DWG C-060
2. FURNISH AND INSTALL: 10" GATE VALVE, MJ
3. FUNISH & INSTALL 10" DI WATER MAIN RESTRAIN ALL PIPE JOINTS MIN COVER 3-FEET
4. FURNISH & INSTALL: 1-10" DI 11.25° HORIZ BEND, MJ
5. FURNISH & INSTALL: 1-10" DI 22.5° HORIZ BEND, MJ
6. FURNISH & INSTALL: 1-18" DI 45° HORIZ BEND, MJ
7. FURNISH & INSTALL: FIRE HYDRANT, SEE DETAIL 2, DWG C-005
8. FURNISH AND INSTALL: 10" DI TEE, MJ
9. FURNISH AND INSTALL: 1" WATER SERVICE, SEE DETAIL 1, DWG C-005
10. FURNISH AND INSTALL: 10" BLIND FLANGE
11. WATERLINE CROSSING UNDER FUTURE GRIT PIPE SEE DET 3/C-003

SANITARY SEWER

1. FURNISH & INSTALL SS CLEANOUT, SEE DETAIL 6, DWG C-004
2. FURNISH & INSTALL D3034/F679 PVC SS PIPE, SIZE AS NOTED
3. FURNISH & INSTALL 48" DIA PRECAST MANHOLE, SEE DETAIL 2, DWG C-004
4. FURNISH & INSTALL SEWER DIVERSION MANHOLE, SEE DETAIL 3, DWG C-004

STORM DRAIN

1. FURNISH & INSTALL DRAIN INLET, SEE DETAIL 5, DWG C-004
2. FURNISH & INSTALL D3034/F679 PVC SD PIPE, SIZE AS NOTED
3. FURNISH & INSTALL 48" DIA PRECAST MANHOLE, SEE DETAIL 2, DWG C-004
4. FURNISH AND INSTALL 10" D3034 PVC TEMPORARY OVERFLOW CONNECTION BETWEEN SD AND SS SEE NOTE 5 DWG C-060

GAS MAIN

12. RELOCATE 1" GAS MAIN
13. INSTALL 1" GAS SERVICE

YARD PIPING SCHEDULE (THIS SHEET)

6" SL-D FORCEMAIN

1. FURNISH & INSTALL 6" DIPS HDPE FM
2. FURNISH & INSTALL: 6" FCA W/BLIND FLANGE W/LOCATION MARKER AT SURFACE FOR FUTURE TIE-IN

12" IPS FORCEMAIN

3. CONNECT TO 12" DI TEE; SEE DETAIL 4, DWG C-003
4. FURNISH & INSTALL 12" DIPS HDPE FM
5. FURNISH & INSTALL: 12" HDPE 90° HORIZ BEND
6. FURNISH & INSTALL: 12" FCA W/BLIND FLANGE W/LOCATION MARKER AT SURFACE FOR FUTURE TIE-IN

24" IPS FORCEMAIN & 12" TEMP FM

7. CONNECT TO 24" DI TEE; SEE DETAIL 4, DWG C-003
8. FURNISH & INSTALL 24" DIPS HDPE FM
9. FURNISH & INSTALL: 24" HDPE 90° HORIZ BEND
10. 24" FM TO 12" TEMP FM CONNECTION SEE DETAIL 1, DWG C-003
11. FURNISH & INSTALL: 1- 12" GATE VALVE
12. FURNISH & INSTALL 12" TEMP DIPS HDPE FM
13. FURNISH & INSTALL: 24" FCA W/BLIND FLANGE W/LOCATION MARKER AT SURFACE FOR FUTURE TIE-IN
14. CONNECT TO EXIST 16" FM SEE DETAIL 2, DWG C-003

12" RDPS FORCEMAIN

15. FURNISH & INSTALL 12" DIPS HDPE FM
16. FURNISH & INSTALL: 12" FCA W/BLIND FLANGE W/LOCATION MARKER AT SURFACE FOR FUTURE TIE-IN

6" PS FORCEMAIN

17. FURNISH & INSTALL 6" DIPS HDPE FM
18. FURNISH & INSTALL: 6" FCA W/BLIND FLANGE W/LOCATION MARKER AT SURFACE FOR FUTURE TIE-IN

4" PSC FORCEMAIN

19. FURNISH & INSTALL 4" DIPS HDPE FM
20. FURNISH & INSTALL: 4" FCA W/BLIND FLANGE W/LOCATION MARKER AT SURFACE FOR FUTURE TIE-IN

6" SL-WAS FORCEMAIN

21. FURNISH & INSTALL 6" DIPS HDPE FM
22. FURNISH & INSTALL: 6" FCA W/BLIND FLANGE W/LOCATION MARKER AT SURFACE FOR FUTURE TIE-IN

NO.	DATE	BY	REVISION

NOTICE

0 ½ 1

IF THIS BAR DOES NOT MEASURE 1" THEN DRAWING IS NOT TO SCALE

BVB DESIGNED
LBK DRAWN
WJM CHECKED

REGISTERED PROFESSIONAL ENGINEER — DocuSigned by: BRIAN E. BARRY — OREGON — AUGUST 14, 2022 — BRIAN E. BARRY — BRIAN E. BARRY — BRIAN E. BARRY — BRIAN E. BARRY — BROOKE VICTORIA BARRY

EXPIRES : 12/31/2023

WEST YOST
Water. Engineered.

Sweet Home Oregon at its best!

MAHLER WATER RECLAMATION FACILITY IMPROVEMENTS PROJECT PHASE 1

ENLARGED YARD PIPING PLAN, SECTION, AND KEY NOTES

PROJECT NO.: 936-50-21-09 | SCALE: AS SHOWN | DATE: AUGUST 2022

SHEET C-061

P:\Clients\936 City Of Sweet Home\50-21-09 WWTP Phase 1 Final Design\CAD\Production\19-2605-OR-C-SITE_SD_PP.dwg C-061 7/28/2022 11:56 AM LKERCADO 24.1s (LMS Tech)

DocuSign Envelope ID: 09934EE9-0C55-40A3-8631-9C0AF6797111

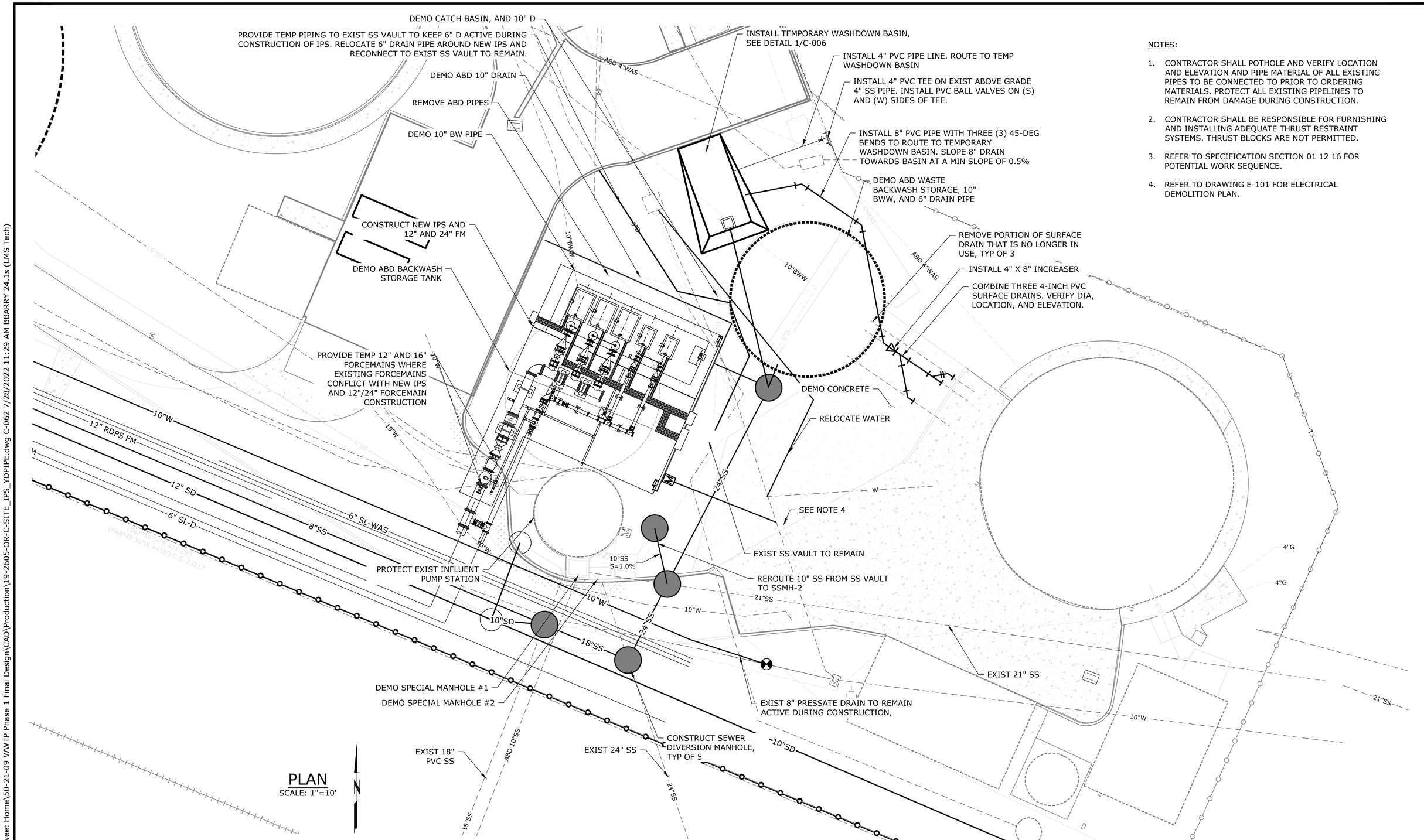

PLAN
SCALE: 1"=10'

NOTES:

1. CONTRACTOR SHALL POTHOLE AND VERIFY LOCATION AND ELEVATION AND PIPE MATERIAL OF ALL EXISTING PIPES TO BE CONNECTED TO PRIOR TO ORDERING MATERIALS. PROTECT ALL EXISTING PIPELINES TO REMAIN FROM DAMAGE DURING CONSTRUCTION.
2. CONTRACTOR SHALL BE RESPONSIBLE FOR FURNISHING AND INSTALLING ADEQUATE THRUST RESTRAINT SYSTEMS. THRUST BLOCKS ARE NOT PERMITTED.
3. REFER TO SPECIFICATION SECTION 01 12 16 FOR POTENTIAL WORK SEQUENCE.
4. REFER TO DRAWING E-101 FOR ELECTRICAL DEMOLITION PLAN.

NO.	DATE	BY	REVISION

NOTICE
0 ½ 1
IF THIS BAR DOES NOT MEASURE 1" THEN DRAWING IS NOT TO SCALE

BVB DESIGNED
BVB DRAWN
WJM CHECKED

REGISTERED PROFESSIONAL ENGINEER
DocuSigned by: Brooke Barry
B7C02EBDA37140A
8/2/2022
BROOKE VICTORIA BARRY
EXPIRES : 12/31/2023

WEST YOST
Water. Engineered.

Sweet Home
Oregon at its best!

MAHLER WATER RECLAMATION FACILITY IMPROVEMENTS PROJECT PHASE 1

INFLUENT PUMP STATION PIPELINE DEMO AND RELOCATION SEQUENCING PLAN

PROJECT NO.: 936-50-21-09 | SCALE: AS SHOWN | DATE: AUGUST 2022

SHEET
C-062
28 of 135

P:\Clients\936 City Of Sweet Home\50-21-09 WWTP Phase 1 Final Design\CAD\Production\19-2605-OR-C-SITE_IPS_YDPIPE.dwg C-062 7/28/2022 11:29 AM BBARRY 24.1s (LMS Tech)

DocuSign Envelope ID: 09934EE9-0C55-40A3-8631-9C0AF6797111

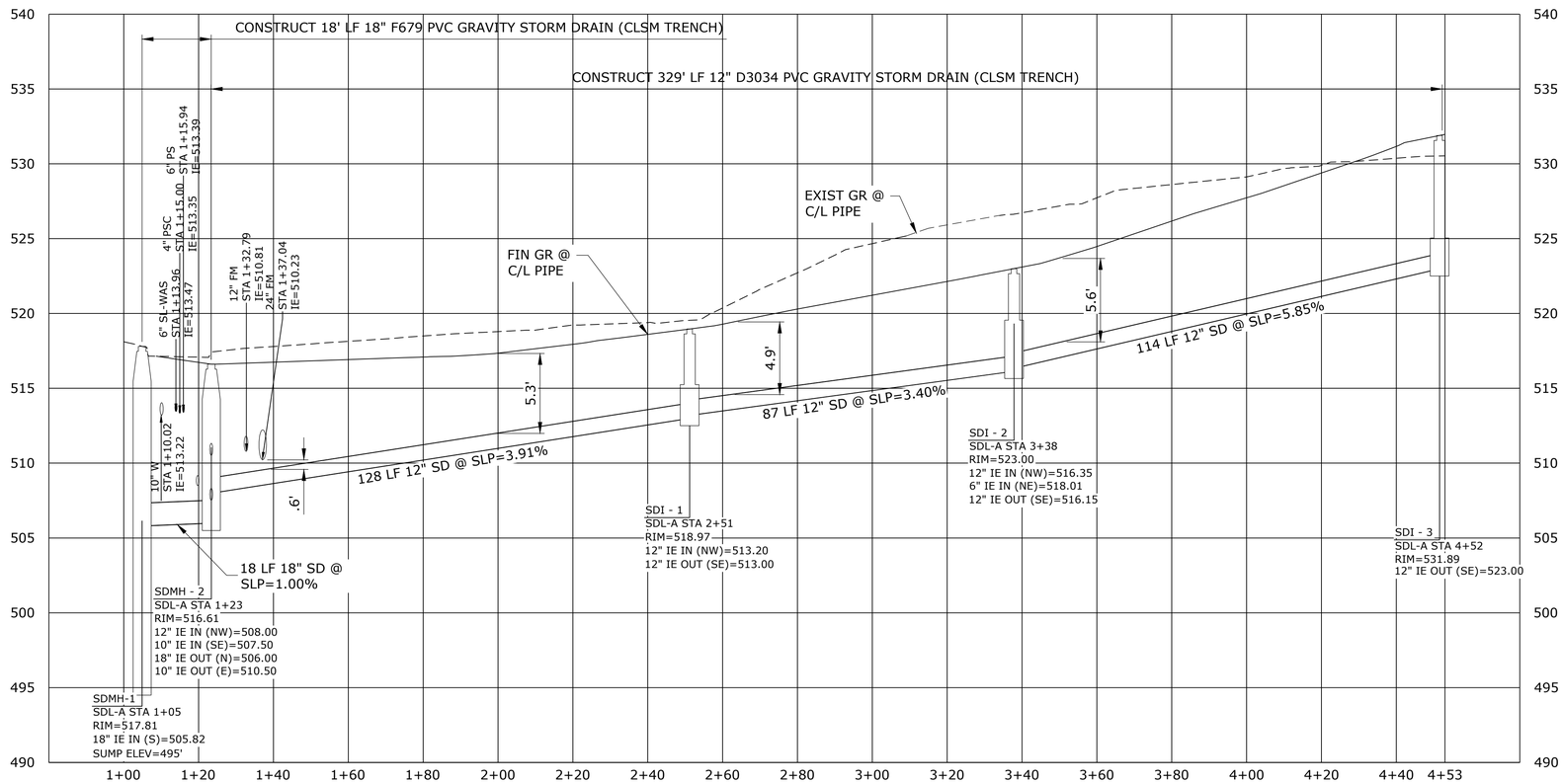

SDL-A PROFILE

SCALE: 1"=20' HORIZ, 1"=5' VERT

P:\Clients\936 City Of Sweet Home\50-21-09 WWTP Phase 1 Final Design\CAD\Production\19-2605-OR-C-SITE_SD_PP.dwg C-070 7/28/2022 11:56 AM LKERCADO 24.1s (LMS Tech)

NO.	DATE	BY	REVISION

NOTICE

0 ½ 1

IF THIS BAR DOES NOT MEASURE 1" THEN DRAWING IS NOT TO SCALE

BVB DESIGNED

LBK DRAWN

WJM CHECKED

REGISTERED PROFESSIONAL ENGINEER DocuSigned by: 85993FE 8/2/2022 OREGON NOV. 14, 2017 BROOKE VICTORIA BARRY

EXPIRES : 12/31/2023

WEST YOST Water. Engineered.

Sweet Home Oregon at its best!

MAHLER WATER RECLAMATION FACILITY IMPROVEMENTS PROJECT PHASE 1

PIPE PROFILES - 1

PROJECT NO.: 936-50-21-09 | SCALE: AS SHOWN | DATE: AUGUST 2022

SHEET C-070

29 of 135

DocuSign Envelope ID: 09934EE9-0C55-40A3-8631-9C0AF6797111

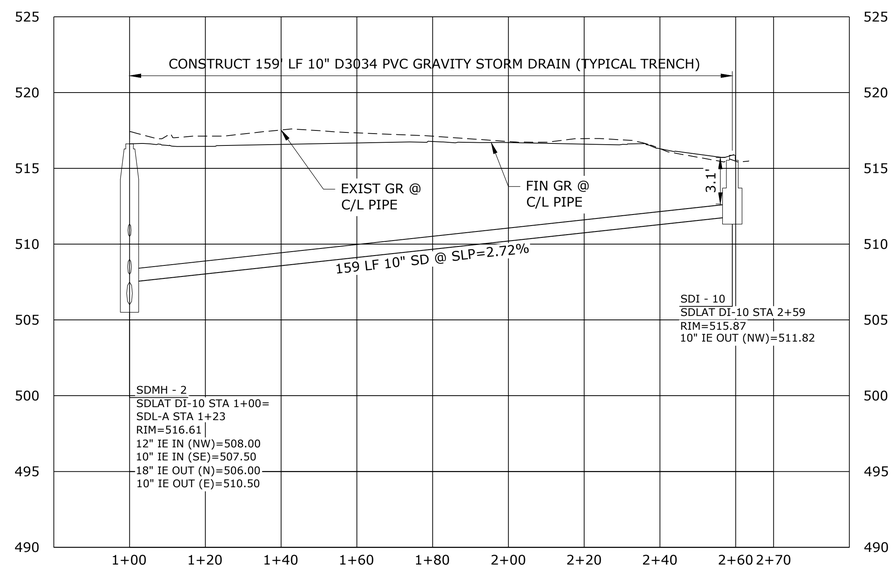

SDLAT DI-10 PROFILE

SCALE: 1"=20' HORIZ, 1"=5' VERT

P:\Clients\936 City Of Sweet Home\50-21-09 WWTP Phase 1 Final Design\CAD\Production\19-2605-OR-C-SITE_SD_PP.dwg C-071 7/28/2022 11:56 AM LKERCADO 24.1s (LMS Tech)

NO.	DATE	BY	REVISION

NOTICE

0 ½ 1

IF THIS BAR DOES NOT MEASURE 1" THEN DRAWING IS NOT TO SCALE

BVB
DESIGNED
LBK
DRAWN
WJM
CHECKED

REGISTERED PROFESSIONAL ENGINEER
DocuSigned by
85903PE
B7C02EBDA37140A
8/2/2022
OREGON
NOV. 14, 2017
BROOKE VICTORIA BARRY
EXPIRES : 12/31/2023

WEST YOST
Water. Engineered.

Sweet Home
Oregon at its best!

MAHLER WATER RECLAMATION FACILITY IMPROVEMENTS PROJECT PHASE 1

PIPE PROFILES - 2

PROJECT NO.: 936-50-21-09 | SCALE: AS SHOWN | DATE: AUGUST 2022

SHEET
C-071
30 of 135

DocuSign Envelope ID: 09934EE9-0C55-40A3-8631-9C0AF6797111

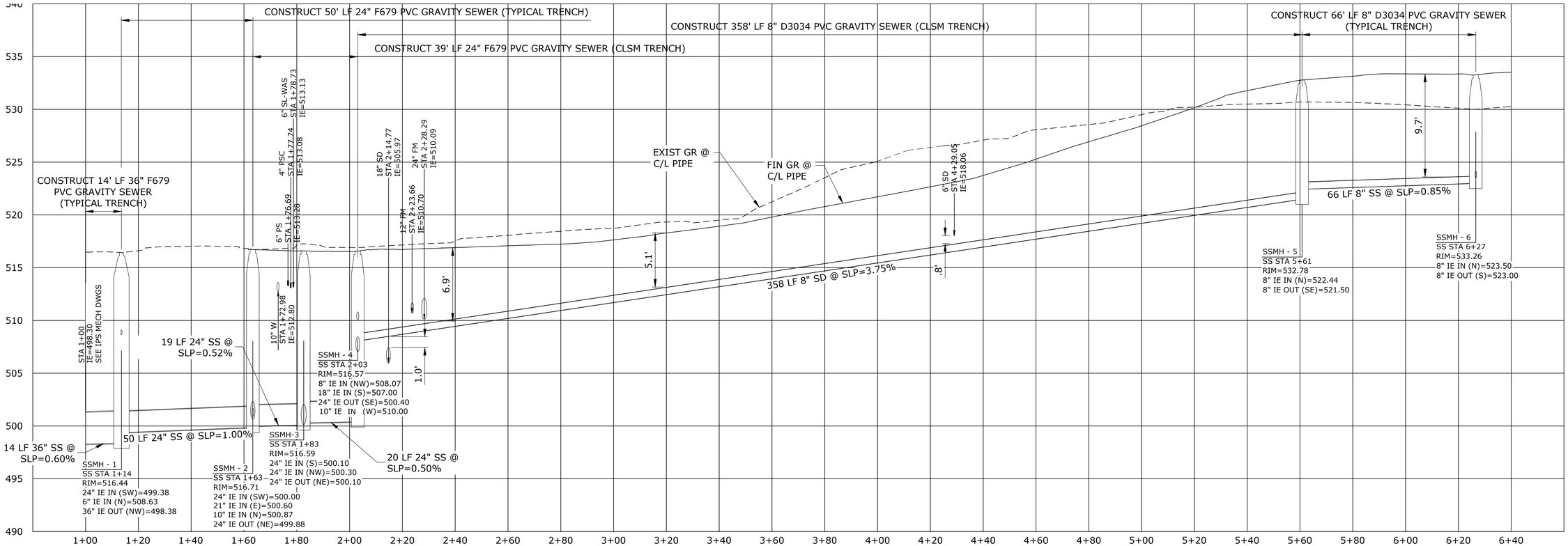

SS PROFILE

SCALE: 1"=20' HORIZ, 1"=5' VERT

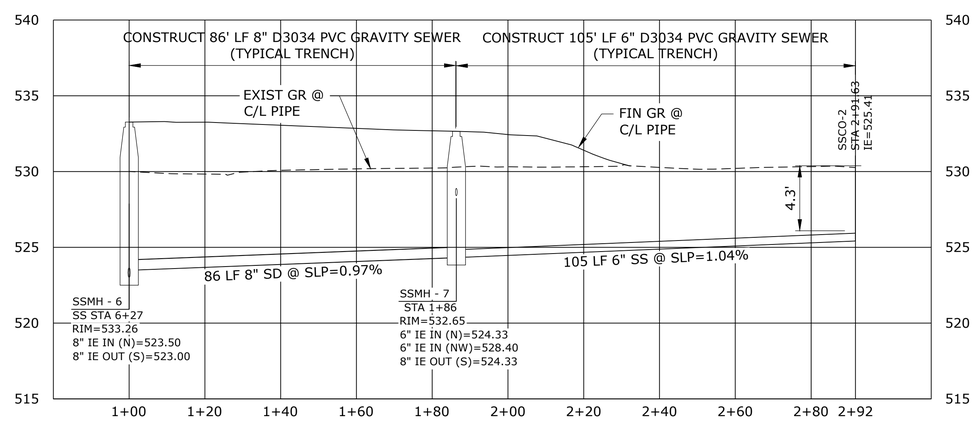

SS LATERAL PROFILE

SCALE: 1"=20' HORIZ, 1"=5' VERT

NO.	DATE	BY	REVISION

NOTICE

0 ½ 1

IF THIS BAR DOES NOT MEASURE 1" THEN DRAWING IS NOT TO SCALE

BVB DESIGNED
LBK DRAWN
WJM CHECKED

REGISTERED PROFESSIONAL ENGINEER Brooke Barry B7C02EBDA37140A 8/2/2022 OREGON NOV. 14, 2017 BROOKE VICTORIA BARRY
EXPIRES : 12/31/2023

WEST YOST Water. Engineered.

Sweet Home Oregon at its best!

MAHLER WATER RECLAMATION FACILITY IMPROVEMENTS PROJECT PHASE 1

PIPE PROFILES - 3

PROJECT NO.: 936-50-21-09 | SCALE: AS SHOWN | DATE: AUGUST 2022

SHEET C-072

31 of 135

P:\Clients\936 City Of Sweet Home\50-21-09 WWTP Phase 1 Final Design\CAD\Production\19-2605-OR-C-SITE_SD_PP.dwg C-072 7/28/2022 11:56 AM LKERCADO 24.1s (LMS Tech)

DocuSign Envelope ID: 09934EE9-0C55-40A3-8631-9C0AF6797111

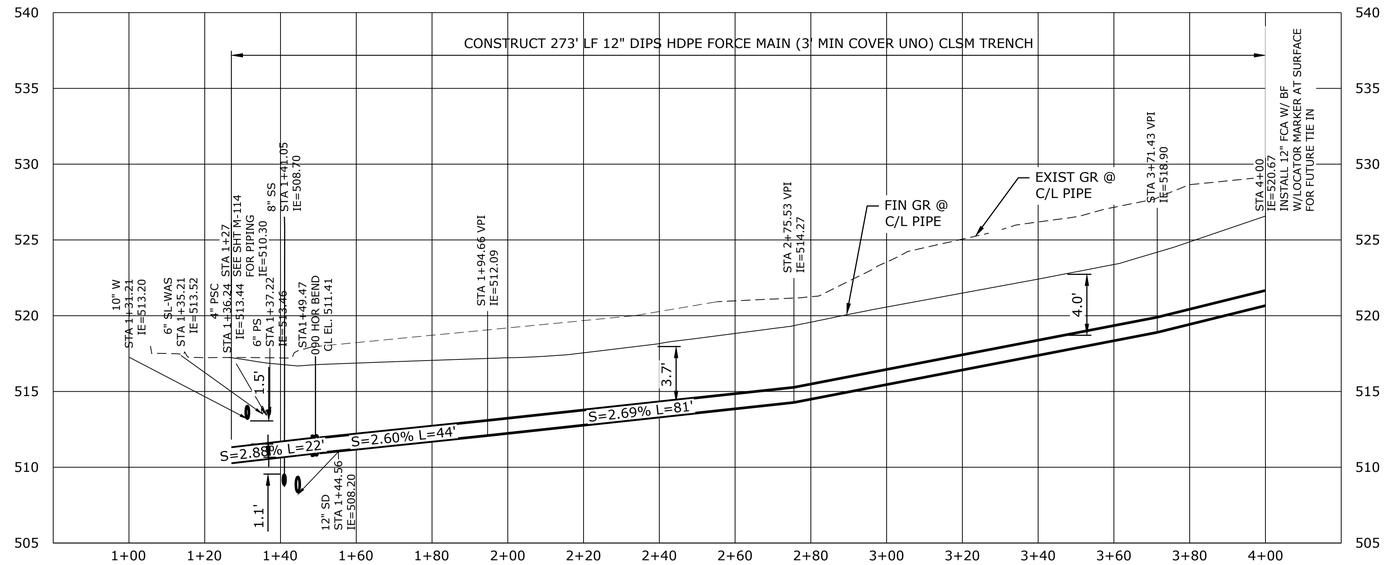

12" IPS FM TO HEADWORKS PROFILE

SCALE: 1"=20' HORIZ, 1"=5' VERT

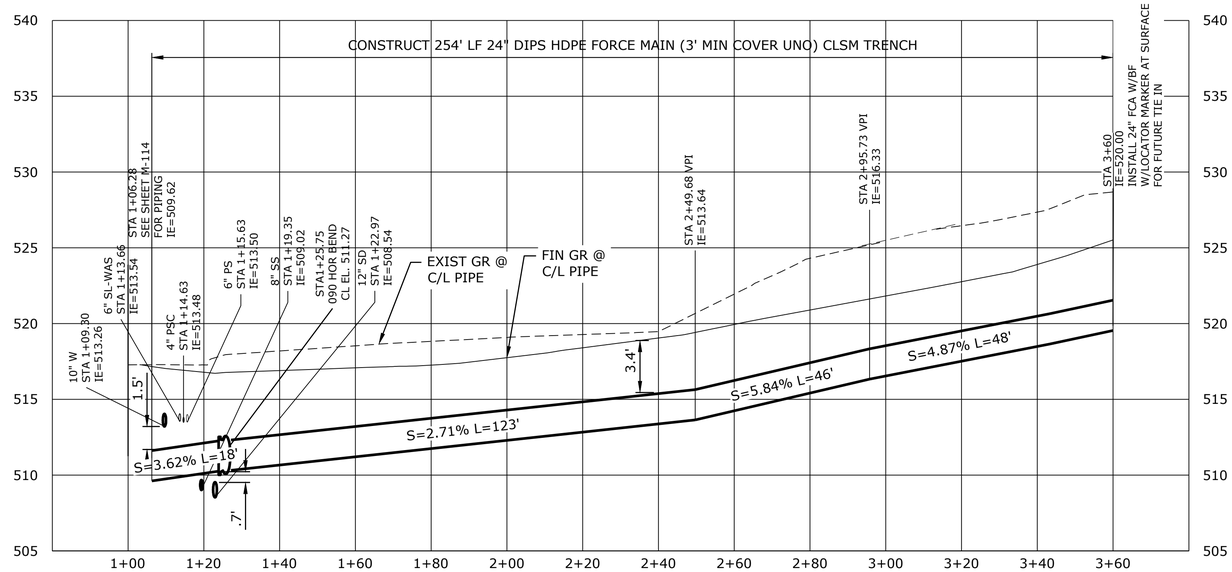

24" IPS FM TO HEADWORKS PROFILE

SCALE: 1"=20' HORIZ, 1"=5' VERT

NO.	DATE	BY	REVISION

NOTICE

0 ½ 1

IF THIS BAR DOES NOT MEASURE 1" THEN DRAWING IS NOT TO SCALE

BVB DESIGNED

LBK DRAWN

WJM CHECKED

REGISTERED PROFESSIONAL ENGINEER DocuSigned by: B5903FE B7CD2EBDA371404 OREGON 8/2/2022 NOV. 14, 2017 BROOKE VICTORIA BARRY

EXPIRES : 12/31/2023

WEST YOST Water. Engineered.

Sweet Home Oregon at its best!

MAHLER WATER RECLAMATION FACILITY IMPROVEMENTS PROJECT PHASE 1

PIPE PROFILES - 4

PROJECT NO.: 936-50-21-09 | SCALE: AS SHOWN | DATE: AUGUST 2022

SHEET C-073

32 of 135

P:\Clients\936 City Of Sweet Home\50-21-09 WWTP Phase 1 Final Design\CAD\Production\19-2605-OR-C-SITE_FM_PP.dwg C-073 8/1/2022 1:18 PM BBARRY 24.1s (LMS Tech)

DocuSign Envelope ID: 09934EE9-0C55-40A3-8631-9C0AF6797111

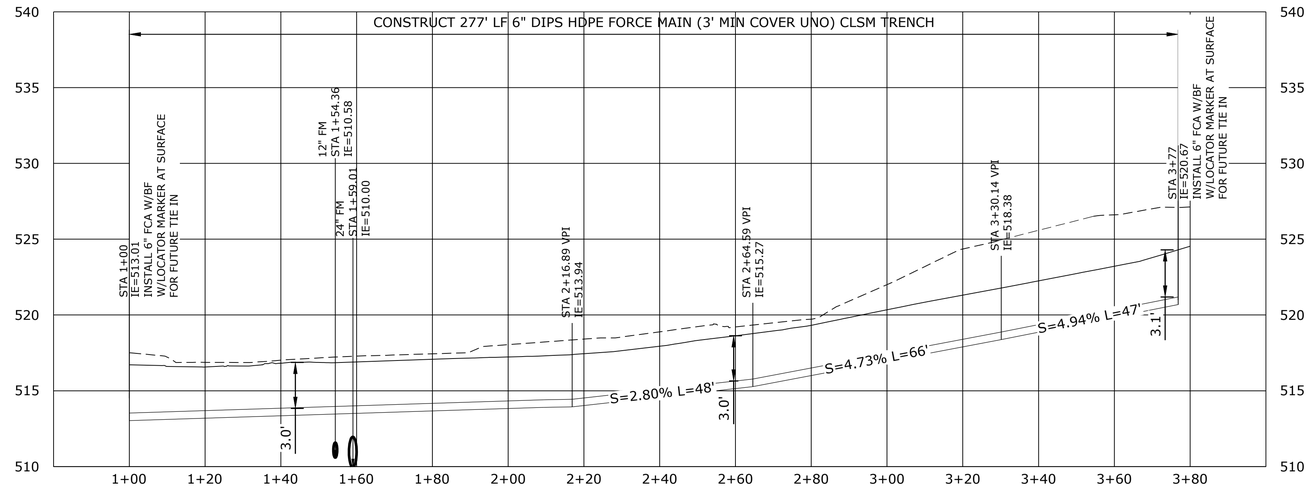

6" PS FM PROFILE

SCALE: 1"=20' HORIZ, 1"=5' VERT

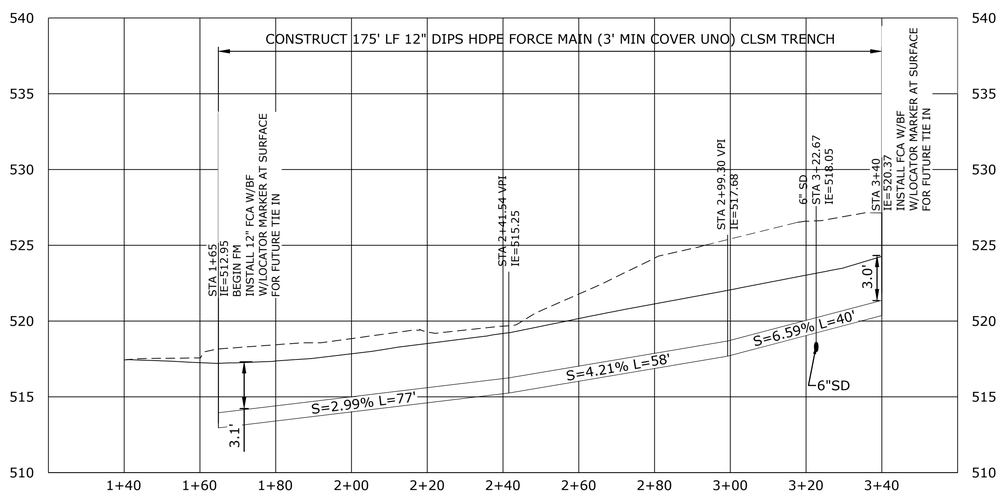

12" RDPS PROFILE

SCALE: 1"=20' HORIZ, 1"=5' VERT

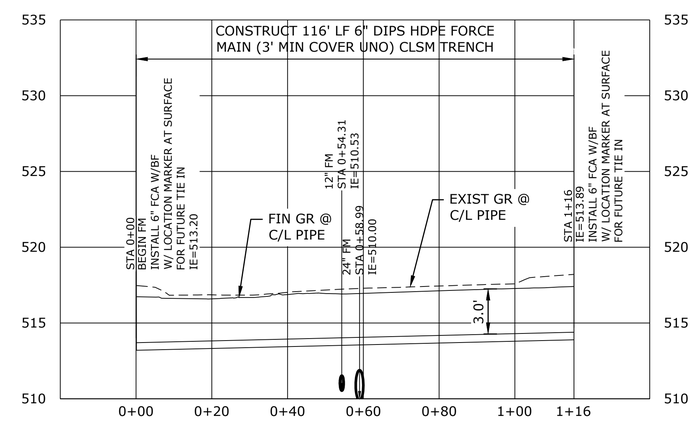

6" SL-WAS PROFILE

SCALE: 1"=20' HORIZ, 1"=5' VERT

NO.	DATE	BY	REVISION

NOTICE

0 ½ 1

IF THIS BAR DOES NOT MEASURE 1" THEN DRAWING IS NOT TO SCALE

BVB
DESIGNED

LBK
DRAWN

WJM
CHECKED

REGISTERED PROFESSIONAL ENGINEER
DocuSigned by:
Brooke Barry
8593BE...
DEC0FEBDA3714F...
8/2/2022
BROOKE VICTORIA BARRY
EXPIRES : 12/31/2023

WEST YOST
Water. Engineered.

Sweet Home
Oregon at its best!

MAHLER WATER RECLAMATION FACILITY IMPROVEMENTS PROJECT PHASE 1

PIPE PROFILES - 5

PROJECT NO.: 936-50-21-09 | SCALE: AS SHOWN | DATE: AUGUST 2022

SHEET
C-074

P:\Clients\936 City Of Sweet Home\50-21-09 WWTP Phase 1 Final Design\CAD\Production\19-2605-OR-C-SITE_FM_PP.dwg C-074 8/1/2022 1:18 PM BBARRY 24.1s (LMS Tech)

DocuSign Envelope ID: 09934EE9-0C55-40A3-8631-9C0AF6797111

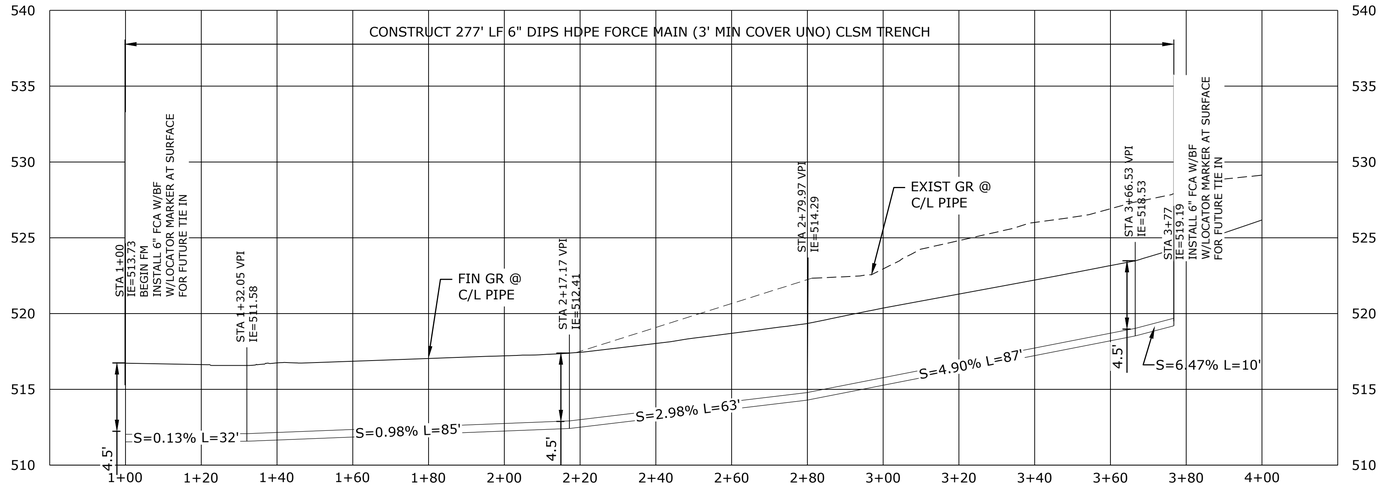

6" SL-D FM PROFILE

SCALE: 1"=20' HORIZ, 1"=5' VERT

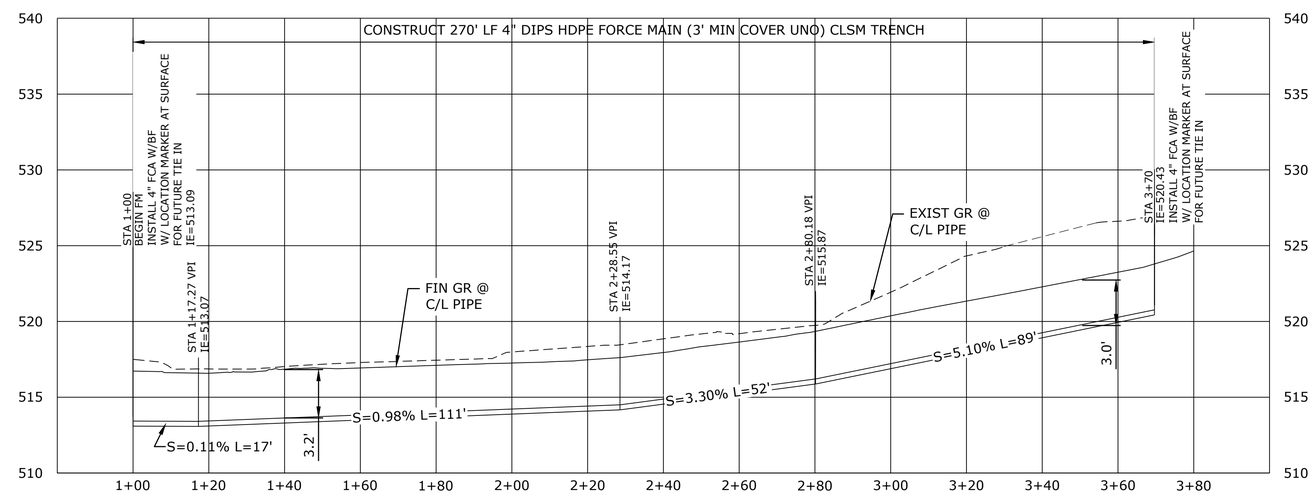

4" PSC PROFILE

SCALE: 1"=20' HORIZ, 1"=5' VERT

NO.	DATE	BY	REVISION

NOTICE

0 ½ 1

IF THIS BAR DOES NOT MEASURE 1" THEN DRAWING IS NOT TO SCALE

BVB
DESIGNED
LBK
DRAWN
WJM
CHECKED

REGISTERED PROFESSIONAL ENGINEER
DocuSigned by
8/2/2022
BROOKE VICTORIA BARRY
EXPIRES : 12/31/2023

WEST YOST
Water. Engineered.

Sweet Home
Oregon at its best!

MAHLER WATER RECLAMATION FACILITY IMPROVEMENTS PROJECT PHASE 1

PIPE PROFILES - 6

PROJECT NO.: 936-50-21-09 | SCALE: AS SHOWN | DATE: AUGUST 2022

SHEET
C-075

P:\Clients\936 City Of Sweet Home\50-21-09 WWTP Phase 1 Final Design\CAD\Production\19-2605-OR-C-SITE_FM_PP.dwg C-075 8/1/2022 1:18 PM BBARRY 24.1s (LMS Tech)

DocuSign Envelope ID: 09934EE9-0C55-40A3-8631-9C0AF6797111

ABBREVIATIONS

ABV	ABOVE
ACC	ACCESSORY
AFF	ABOVE FINISHED FLOOR
ALUM	ALUMINUM
BLKG	BLOCKING
CLST	CLOSET
C.I.	CONTINUOUS INSULATION
DBL	DOUBLE
DN	DOWN
MSTR	MASTER
	CENTERLINE
CFCI	CONTRACTOR FURNISHED CONTRACTOR INSTALLED
CONC	CONCRETE
CONT	CONTINUOUS
CPT	COMMON PATH OF TRAVEL
DEMO	DEMOLISH/DEMOLITION
DS	DOWNSPOUT
(E)	EXISTING
EQ	EQUAL
EN	END NAIL
ETD	EXIT TRAVEL DISTANCE
FLR	FLOOR
GC	GENERAL CONTRACTOR
GLZ	GLAZING
GYP	GYPSUM WALL BOARD
HM	HOLLOW METAL
HT	HEIGHT
HR	HOUR
INFO	INFORMATION
LYR	LAYER
MAX	MAXIMUM
MMCJ	MASONRY CONTROL JOINT
MFR	MANUFACTURER
MIN	MINIMUM
MTL	METAL
(N)	NEW
NTS	NOT TO SCALE
NFPA	NATIONAL FIRE PROTECTION ASSOCIATION
NRCA	NATIONAL ROOFING CONTRACTORS ASSOCIATION
OFOI	OWNER FURNISHED OWNER INSTALLED
OFCI	OWNER FURNISHED OWNER CONTRACTOR INSTALLED
PEMB	PRE ENGINEERED METAL BUILDING
PRE-MFR	PRE-MANUFACTURED
PT	PRESSURE TREATED
REQ'D	REQUIRED
R.O.	ROUGH OPENING
(S)	SIMPSON
SFR	SINGLE FAMILY RESIDENCE
SOG	SLAB ON GRADE
SPEC	SPECIFICATION
T.O.	TOP OF
TYP	TYPICAL
UNO	UNLESS NOTED OTHERWISE
VFY	VERIFY
V.O.S.	VERIFY ON SITE
WIN	WINDOW
WRB	WEATHER RESISTIVE BARRIER

LEGEND

ROOM TAG

101
NAME
150 SF
OC
XX OCC

- ROOM NUMBER
- ROOM NAME
- AREA
- OCCUPANCY CATEGORY
- NUMBER OF OCCUPANTS

CPT: XX'
ETD: XX'

36" WIDE EXIT EGRESS ROUTE WITH ILLUMINATED EXIT SIGN
CPT: COMMON PATH OF TRAVEL
ETD: EXIT TRAVEL DISTANCE

XX

HORIZONTAL OR VERTICAL ASSEMBLY

X / AX.X

DETAIL MARKER

XX

WINDOW/ DOOR/ LOUVER MARKER

INDICATES DIRECTIONAL ARROW

EXIT SIGN

SHADED AREA INDICATES SIGNAGE FACE

FE

FIRE EXTINGUISHER

APPLICABLE CODES

2019 OREGON STRUCTURAL SPECIALTY CODE (OSSC)
2021 OREGON ENERGY EFFICIENCY SPECIALTY CODE (OEESC)

HEIGHTS AND AREAS

PER OSSC TABLES 504.3, 504.4, 506.2

F-1 OCCUPANCY
TYPE V-B CONSTRUCTION (NON SPRINKLERED)
2 STORIES ALLOWED (B, F-1) / 1 STORIES PROPOSED
40FT ABOVE GRADE ALLOWED / LESS THAN 35' PROPOSED
8,500 SF MAX / SEE OCCUPANCY TABLES FOR PROPOSED SF

TYPES OF CONSTRUCTION

BUILDING	TYPE
AREA 42 - MAIN ELECTRICAL BLOWER BUILDING	V-B
AREA 87 - SOUTH ELECTRICAL BUILDING	V-B

REQUIRED SEPARATION

NONE REQUIRED

FIRE PROTECTION

SPRINKLERS NOT REQUIRED
FIRE ALARMS NOT REQUIRED
FIRE EXTINGUISHER PER FIRE CODE

DEFERRED SUBMITTALS

--

AMERICAN'S WITH DISABILITIES ACT (ADA)

BUILDING EXEMPT FROM ADA REQUIREMENTS PER OSSC 1103.2.9 "EQUIPMENT SPACES"

THERMAL ENVELOPE

AREA 42 (MAIN ELECTRICAL BLOWER BUILDING):
SLAB EDGE INSULATION:
NOT REQUIRED PER COMCHECK
EXTERIOR WALLS:
R-6.3 CONTINUOUS INSULATION; R-20 CAVITY INSULATION
ROOF:
R-30 CONTINUOUS INSULATION ABOVE STRUCTURAL DECK

AREA 87 (SOUTH ELECTRICAL BUILDING):
SLAB EDGE INSULATION:
NOT REQUIRED PER COMCHECK
EXTERIOR WALLS:
R-8 CONTINUOUS INSULATION
ROOF:
R-30 CONTINUOUS INSULATION ABOVE STRUCTURAL DECK

NOTE: THERMAL ENVELOPE MEETS BUILDING SYSTEMS COMPLIANCE PATH PER COMCHECK ANALYSIS

ALL BUILDINGS:

DOORS:
SWINGING DOORS: U 0.370 MAX
NONSWINGING DOORS: U 0.310 MAX
WINDOWS:
METAL FRAMING, FIXED: U 0.36 MAX, SHGC 0.36 MAX, VT/SHGC 1.10 MIN
METAL FRAMING, OPERABLE: U 0.45 MAX, SHGC 0.33 MAX, VT/SHGC 1.10 MIN
METAL FRAMING, ENTRANCE: U 0.63 MAX, SHGC 0.33 MAX VT/SHGC 1.10 MIN
SKYLIGHTS (0% - 3% ROOF AREA MAX):
ALL TYPES U 0.50 MAX, SHGC 0.40 MAX

ASHRAE/IES STANDARD 90.1-2019
SECTION 5.4.3.1 AIR BARRIER COMPLIANCE:
BUILDING ENVELOPE PER SECTION 5.4.3.1.1 AND 5.4.3.1.2

OCCUPANCY TABLE - MAIN ELECTRICAL & BLOWER BUILDING

SPACE	OCC CLASS	SF/OCC	AREA	OCCS
BLOWER ROOM	F-1	300	881 SF	3
ELECTRIC RM.	F-1	300	502 SF	2
TOTAL F-1 OCCUPANCY			1383 SF	5

OCCUPANCY TABLE - 870 SOUTH ELECTRICAL BUILDING

SPACE	OCC CLASS	SF/OCC	AREA	OCCS
ELECTRICAL ROOM	F-1	300	377 SF	2
TOTAL F-1 OCCUPANCY			377 SF	2

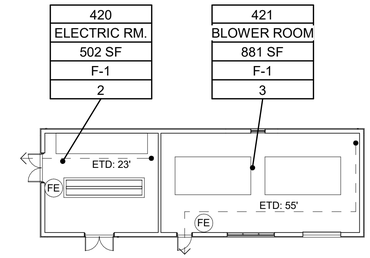

AREA 42 - MAIN ELECTRICAL & BLOWER BLDG (MEB) - CODE PLAN (1)
1/16" = 1'-0"

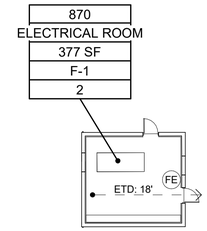

AREA 87 - SOUTH ELECTRICAL BLDG - CODE PLAN (2)
1/16" = 1'-0"

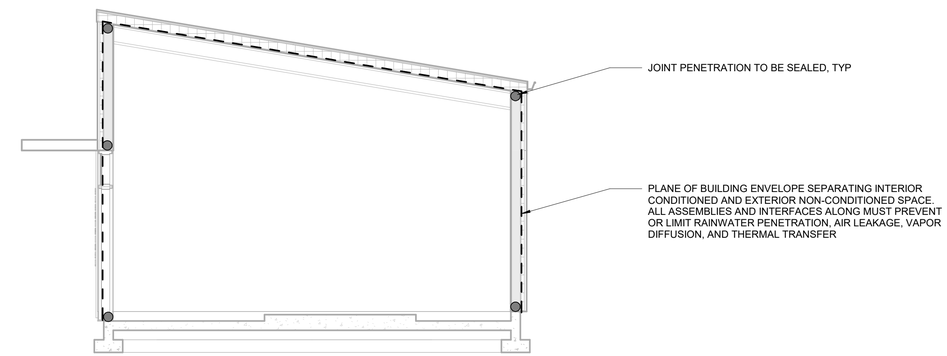

AIR BARRIER SECTION (3)
1/4" = 1'-0"

STRONGWORK ARCHITECTURE

NO.	DATE	BY	REVISION

NOTICE
0 1/2 1
IF THIS BAR DOES NOT MEASURE 1" THEN DRAWING IS NOT TO SCALE

SD DESIGNED
DH DRAWN
AA CHECKED

REGISTERED ARCHITECT ALAN P. ARMSTRONG 09-25 PORTLAND, OREGON STATE OF OREGON

WEST YOST Water. Engineered.

Sweet Home Oregon at its best!

MAHLER WATER RECLAMATION FACILITY IMPROVEMENTS PROJECT PHASE 1

ARCHITECTURAL LEGEND AND CODE INFORMATION

PROJECT NO.: 936-50-21-09 | SCALE: As indicated | DATE: August 2022

SHEET A-001

7/29/2022 9:24:25 AM Autodesk Docs://Sweet Home WWTP/21009 Sweet Home WWTP - AREA 42 - BLOWER AND ELECT.rvt

DocuSign Envelope ID: 09934EE9-0C55-40A3-8631-9C0AF6797111

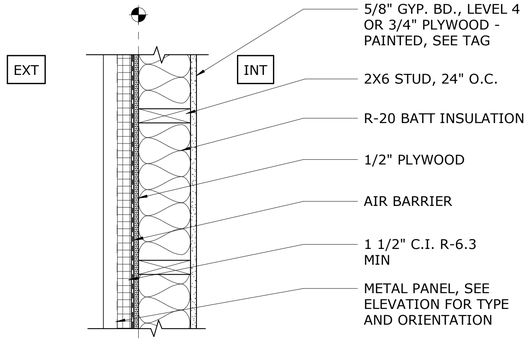

1A - INTERIOR FINISH GYPSUM (BLOWER RM)
1B - INTERIOR FINISH PLYWOOD (ELEC ROOM)

1 TYP EXTERIOR WALL
SCALE: 1 1/2" = 1'-0"

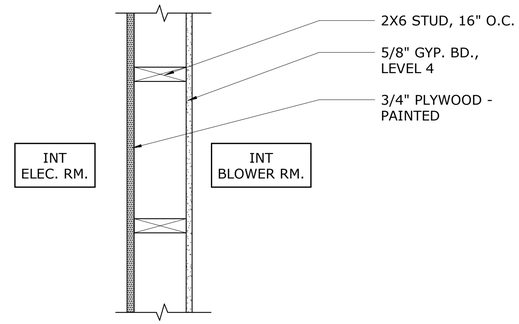

2 TYP INTERIOR WALL
SCALE: 1 1/2" = 1'-0"

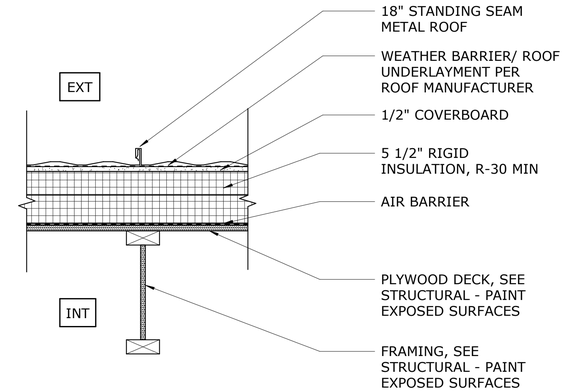

3 TYP ROOF
SCALE: 1 1/2" = 1'-0"

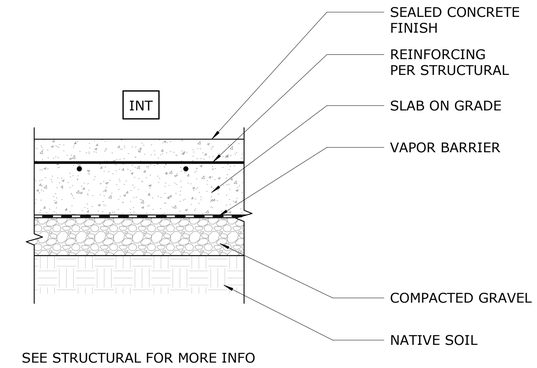

4 TYP SLAB
SCALE: 1 1/2" = 1'-0"

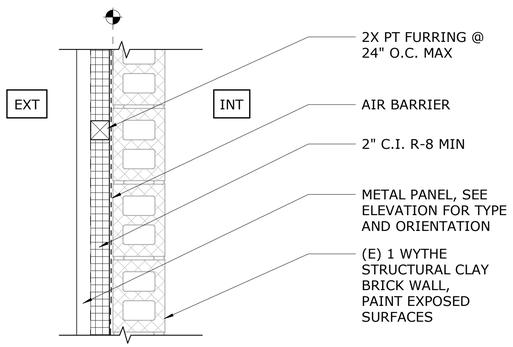

5 SOUTH ELECTRICAL BUILDING WALL
SCALE: 1 1/2" = 1'-0"

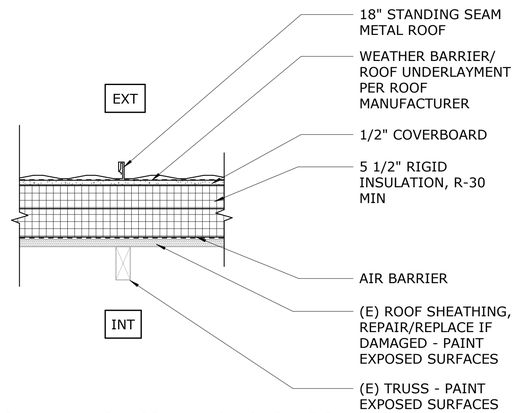

6 SOUTH ELECTRICAL BUILDING ROOF
SCALE: 1 1/2" = 1'-0"

DOOR SECURITY SCHEDULE

MARK	ROOM	KEYED	CARD READER	DOOR SWITCH POSITION	REQUEST TO EXIT
420A	ELECTRIC RM.	●	●	●	●
420B	ELECTRIC RM.	●	●	●	●
421A	BLOWER ROOM	●	●	●	●
421B	BLOWER ROOM	●	●	●	●
870A	ELECTRICAL ROOM	●	●	●	●
870B	ELECTRICAL ROOM	●	●	●	●

MEB WINDOW SCHEDULE

WINDOW				DETAIL			GLAZING TYPE	FIRE RATING	COMMENTS
#	WIDTH	HEIGHT	TYPE	HEAD	JAMB	SILL			
4201	10' - 0"	2' - 0"	A	4/A-003	5/A-003	6/A-003	GLZ-1	N/A	1
4202	10' - 0"	3' - 0"	B	4/A-003	5/A-003	6/A-003	GLZ-1	N/A	1

MEB LOUVER SCHEDULE

#	WIDTH	HEIGHT	TYPE	COMMENTS
4203	3' - 0"	3' - 0"	C	1, 2
4204	3' - 0"	5' - 4"	C	1, 2

WINDOW AND LOUVER NOTES
1. SEE SPECIFICATION FOR ADDITIONAL INFORMATION
2. SEE MECHANICAL FOR ADDITIONAL INFORMATION

MEB DOOR SCHEDULE

MARK	SIZE (FIELD VFY)	DOOR TYPE	DOOR MAT'L	DOOR GLAZING	FRAME TYPE	FRAME MAT'L	FINISH	THICKNESS	HARDWARE SET	NOTES
420A	3' - 0" x 7' - 0"	A	HM	N/A	A	HM	PNT	0' - 1 3/4"	2	1,2,3
420B	6' - 0" x 7' - 0"	C	HM	GLZ-1	B	HM	PNT	0' - 1 3/4"	2	1,2,3
421A	3' - 0" x 7' - 0"	B	HM	GLZ-1	B	HM	PNT	0' - 1 3/4"	3	1,2
421B	8' - 0" x 9' - 0"	E	MTL	N/A	N/A	ST	PNT	0' - 2"	1	

SOUTH ELECTRICAL BUILDING DOOR SCHEDULE

#	SIZE (FIELD VFY)	DOOR TYPE	DOOR MAT'L	DOOR GLAZING	FRAME TYPE	FRAME MAT'L	FINISH	THICKNESS	HARDWARE SET	NOTES
870A	3' - 0" x 6' - 4"	D	HM	N/A	A	HM	PNT	0' - 1 3/4"	4	2, 3, 4
870B	3' - 0" x 6' - 4"	D	HM	N/A	A	HM	PNT	0' - 1 3/4"	4	2, 3, 4

DOOR NOTES:
1. SEE SPECIFICATION SECTION 08 80 00 FOR GLAZING.
2. SEE SPECIFICATION SECTION 08 71 00 FOR DOOR HARDWARE
3. DOOR WITH PANIC HARDWARE
4. EXISTING DOOR OPENING, FIELD VERIFY SIZE

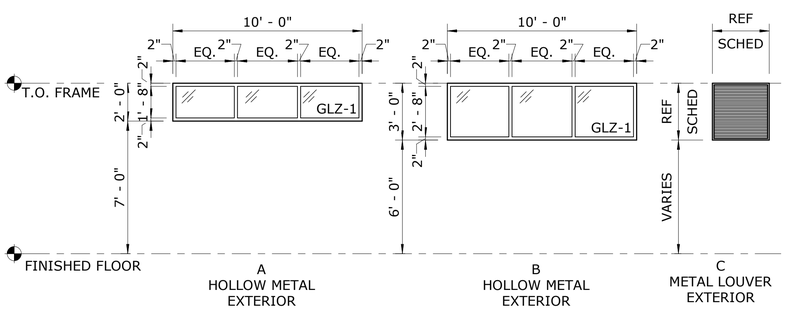

WINDOW AND LOUVER TYPES
SCALE: 1/4" = 1'-0"

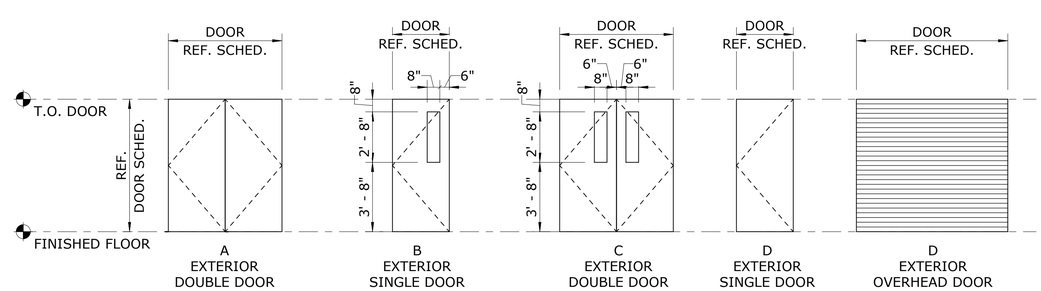

DOOR TYPES
SCALE: 1/4" = 1'-0"

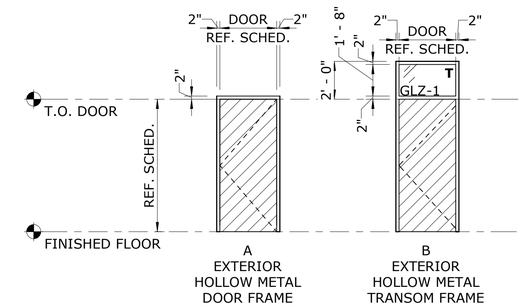

DOOR FRAME TYPES
SCALE: 1/4" = 1'-0"

STRONGWORK ARCHITECTURE

NO.	DATE	BY	REVISION

NOTICE
0 1/2 1
IF THIS BAR DOES NOT MEASURE 1" THEN DRAWING IS NOT TO SCALE

SD DESIGNED
DH DRAWN
AA CHECKED

REGISTERED ARCHITECT ALAN P. ARMSTRONG PORTLAND, OREGON STATE OF OREGON

WEST YOST Water. Engineered.

Sweet Home Oregon at its best!

MAHLER WATER RECLAMATION FACILITY IMPROVEMENTS PROJECT PHASE 1

ARCHITECTURAL DETAILS - HORIZONTAL & VERTICAL ASSEMBLIES, DOOR & WINDOW TYPES & SCHEDULES

PROJECT NO.: 936-50-21-09 | SCALE As indicated | DATE August 2022

SHEET A-002

7/29/2022 9:24:26 AM Autodesk Docs://Sweet Home WWTP/21009 Sweet Home WWTP - AREA 42- BLOWER AND ELECT.rvt

DocuSign Envelope ID: 09934EE9-0C55-40A3-8631-9C0AF6797111

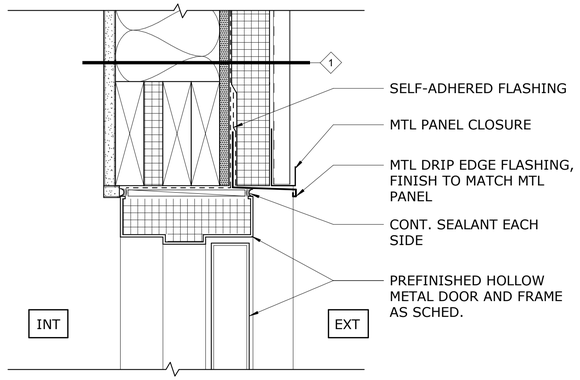

HM DOOR HEADER - EXTERIOR WOOD FRAMED (1)
3" = 1'-0"

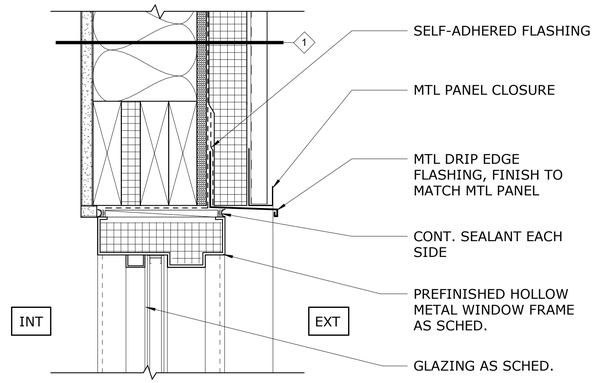

HM WINDOW HEAD - EXTERIOR WOOD FRAMED (4)
3" = 1'-0"

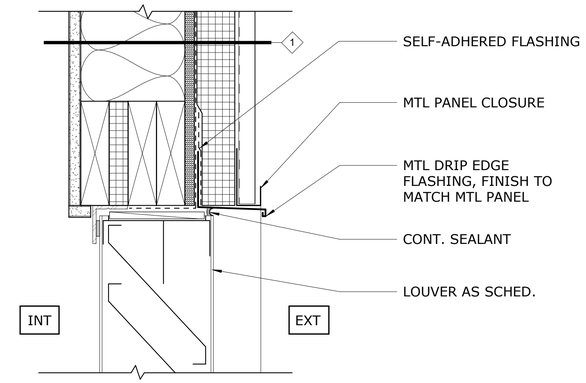

LOUVER HEAD - EXTERIOR WOOD FRAMED (7)
3" = 1'-0"

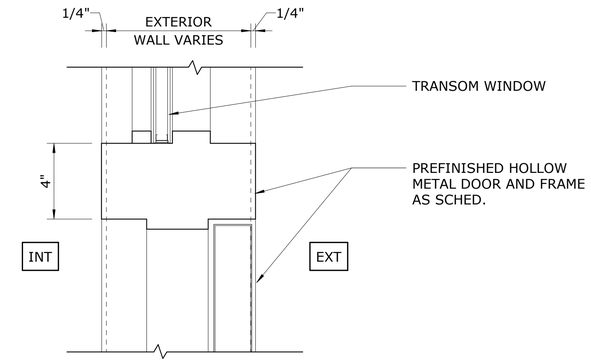

TRANSOM SILL (10)
3" = 1'-0"

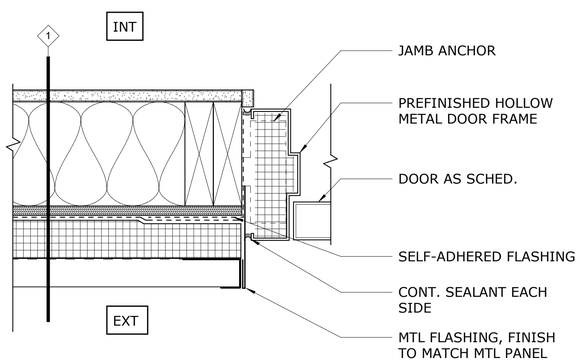

HM DOOR JAMB - EXTERIOR WOOD FRAMED (2)
3" = 1'-0"

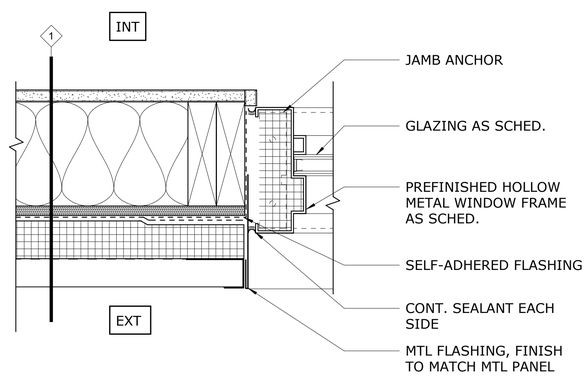

HM WINDOW JAMB - EXTERIOR WOOD FRAMED (5)
3" = 1'-0"

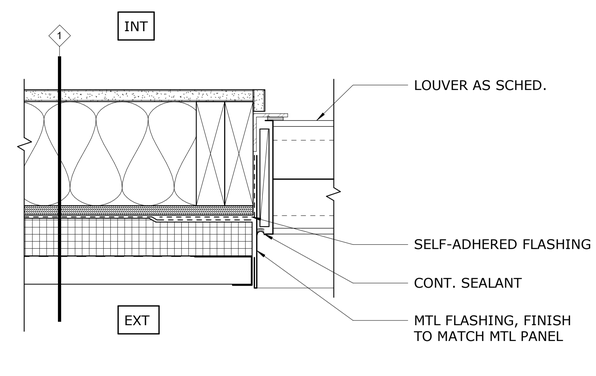

LOUVER JAMB - EXTERIOR WOOD FRAMED (8)
3" = 1'-0"

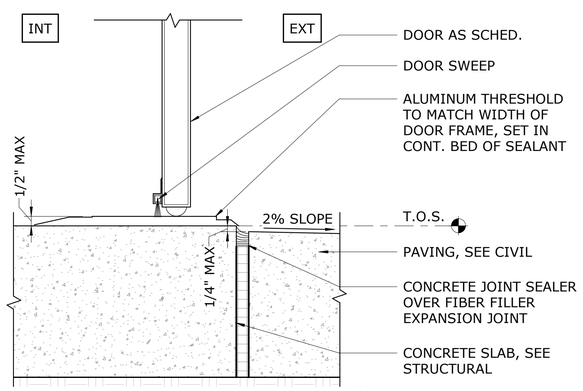

EXTERIOR DOOR THRESHOLD (3)
3" = 1'-0"

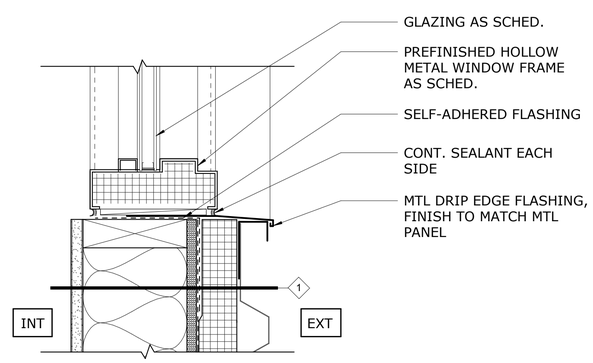

HM WINDOW SILL - EXTERIOR WOOD FRAMED (6)
3" = 1'-0"

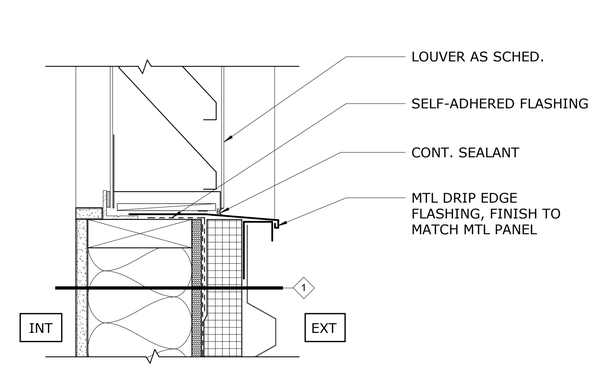

LOUVER SILL - EXTERIOR WOOD FRAMED (9)
3" = 1'-0"

STRONGWORK
ARCHITECTURE

NO.	DATE	BY	REVISION

NOTICE
0 1/2 1
IF THIS BAR DOES NOT MEASURE 1" THEN DRAWING IS NOT TO SCALE

SD DESIGNED
DH DRAWN
AA CHECKED

REGISTERED ARCHITECT ALAN P. ARMSTRONG PORTLAND, OREGON STATE OF OREGON

WEST YOST
Water. Engineered.

Sweet Home Oregon at its best!

MAHLER WATER RECLAMATION FACILITY IMPROVEMENTS PROJECT PHASE 1

ARCHITECTURAL DETAILS - OPENING DETAILS

PROJECT NO.: 936-50-21-09 | SCALE 3" = 1'-0" | DATE August 2022

SHEET A-003

7/29/2022 9:24:26 AM Autodesk Docs://Sweet Home WWTP/21009 Sweet Home WWTP - AREA 42 - BLOWER AND ELECT.rvt

DocuSign Envelope ID: 09934EE9-0C55-40A3-8631-9C0AF6797111

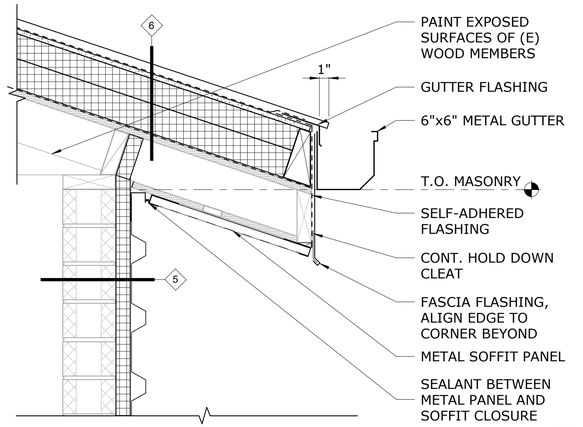

TYP. ROOF EAVE WITH GUTTER @ SOUTH ELECTRICAL BUILDING (1)
1 1/2" = 1'-0"

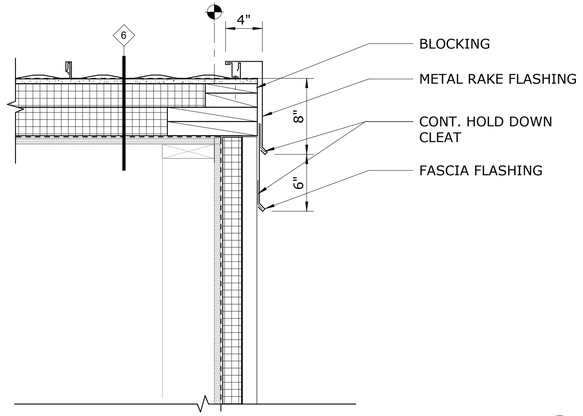

TYP. ROOF RAKE @ SOUTH ELECTRICAL BUILDING (4)
1 1/2" = 1'-0"

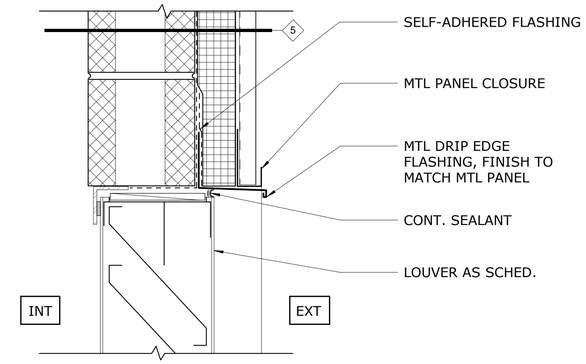

LOUVER HEAD - SOUTH ELECTRICAL BUILDING (7)
3" = 1'-0"

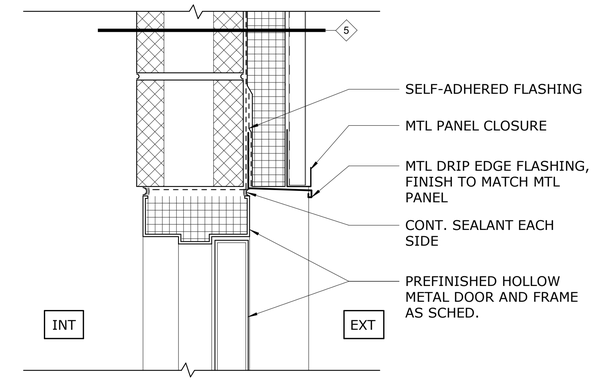

HM DOOR HEADER - SOUTH ELECTRICAL BUILDING (10)
3" = 1'-0"

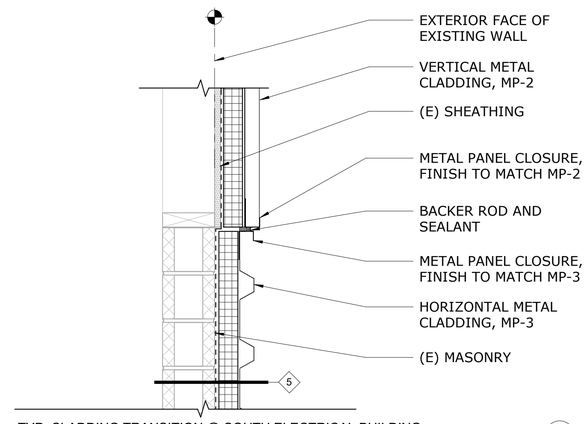

TYP. CLADDING TRANSITION @ SOUTH ELECTRICAL BUILDING (5)
1 1/2" = 1'-0"

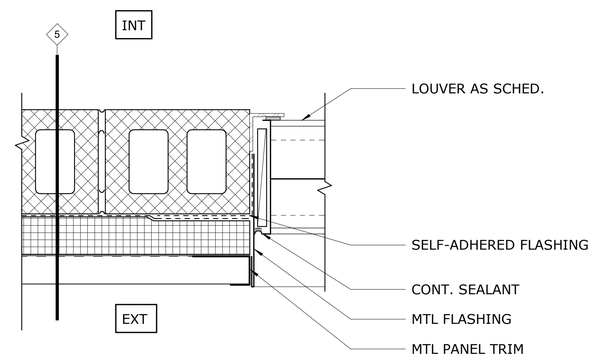

LOUVER JAMB - SOUTH ELECTRICAL BUILDING (8)
3" = 1'-0"

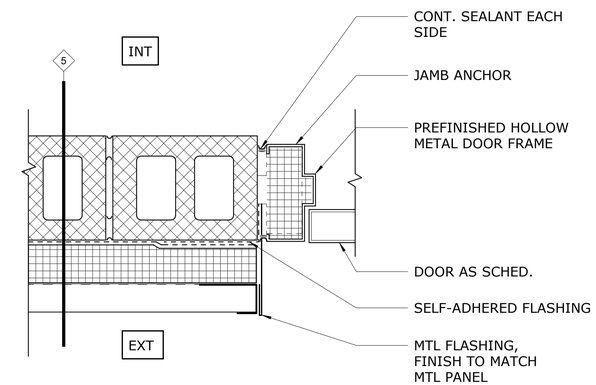

HM DOOR JAMB - SOUTH ELECTRICAL BUILDING (11)
3" = 1'-0"

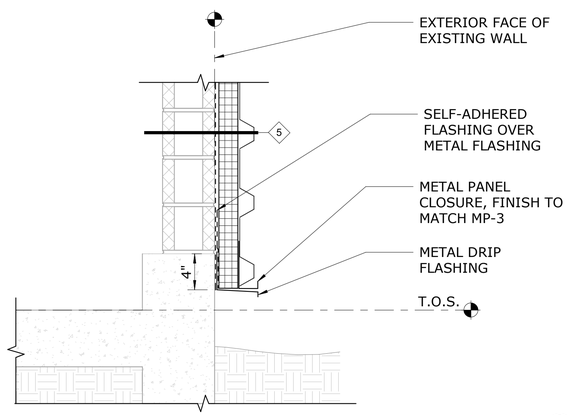

TYP. METAL PANEL BASE TRIM @ SOUTH ELECTRICAL BUILDING (6)
1 1/2" = 1'-0"

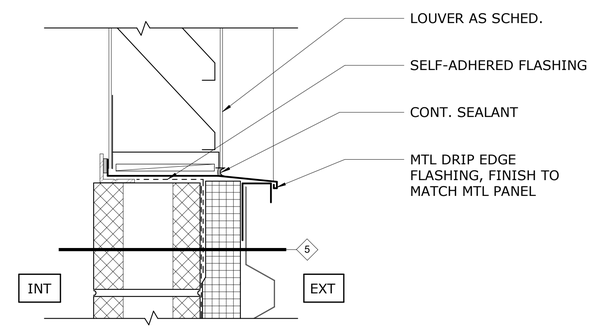

LOUVER SILL - SOUTH ELECTRICAL BUILDING (9)
3" = 1'-0"

STRONGWORK
ARCHITECTURE

NO.	DATE	BY	REVISION

NOTICE
0 1/2 1
IF THIS BAR DOES NOT MEASURE 1" THEN DRAWING IS NOT TO SCALE

SD DESIGNED
DH DRAWN
AA CHECKED

REGISTERED ARCHITECT ALAN P. ARMSTRONG PORTLAND, OREGON STATE OF OREGON

WEST YOST
Water. Engineered.

Sweet Home Oregon at its best!

MAHLER WATER RECLAMATION FACILITY IMPROVEMENTS PROJECT PHASE 1

ARCHITECTURAL DETAILS - OPENING AND MICELLANEOUS DETAILS

PROJECT NO.: 936-50-21-09 | SCALE As indicated | DATE August 2022

SHEET A-004

38 of 135

7/29/2022 9:26:33 AM Autodesk Docs://Sweet Home WWTP/21009 Sweet Home WWTP - EXISTING ELECT BLDG.rvt

DocuSign Envelope ID: 09934EE9-0C55-40A3-8631-9C0AF6797111

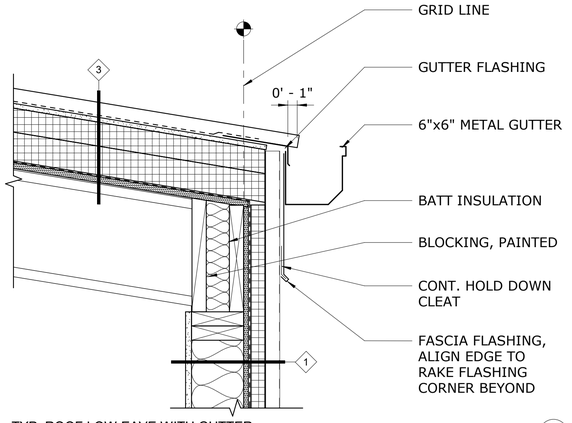

TYP. ROOF LOW EAVE WITH GUTTER (1)
1 1/2" = 1'-0"

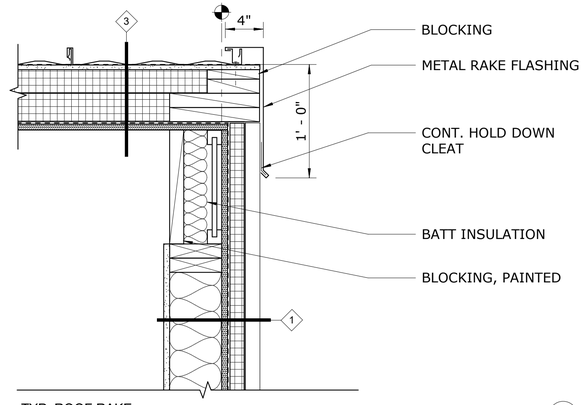

TYP. ROOF RAKE (4)
1 1/2" = 1'-0"

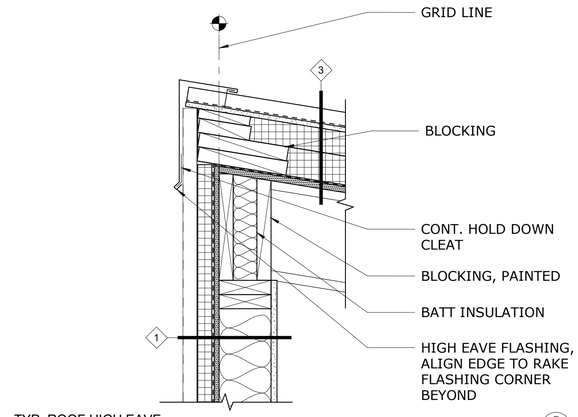

TYP. ROOF HIGH EAVE (7)
1 1/2" = 1'-0"

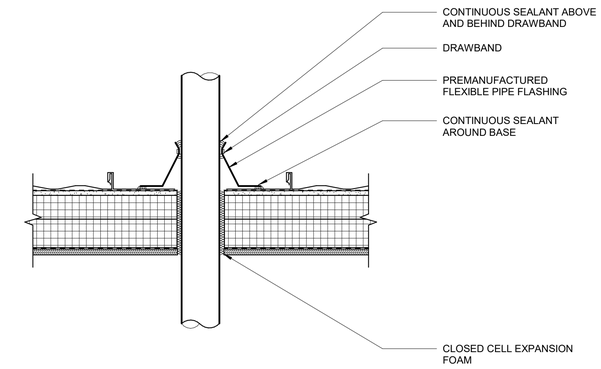

TYP. ROOF PENETRATION DETAIL (10)
1 1/2" = 1'-0"

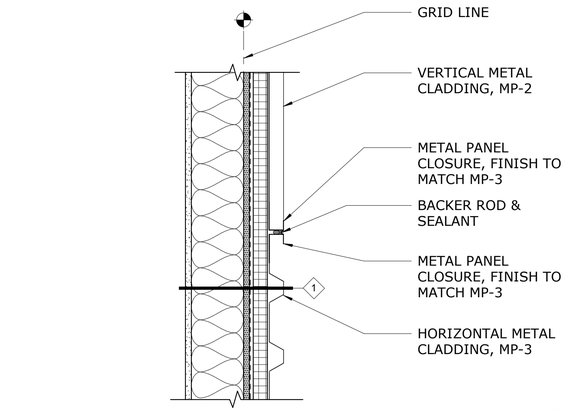

TYP METAL PANEL TRANSITION (2)
1 1/2" = 1'-0"

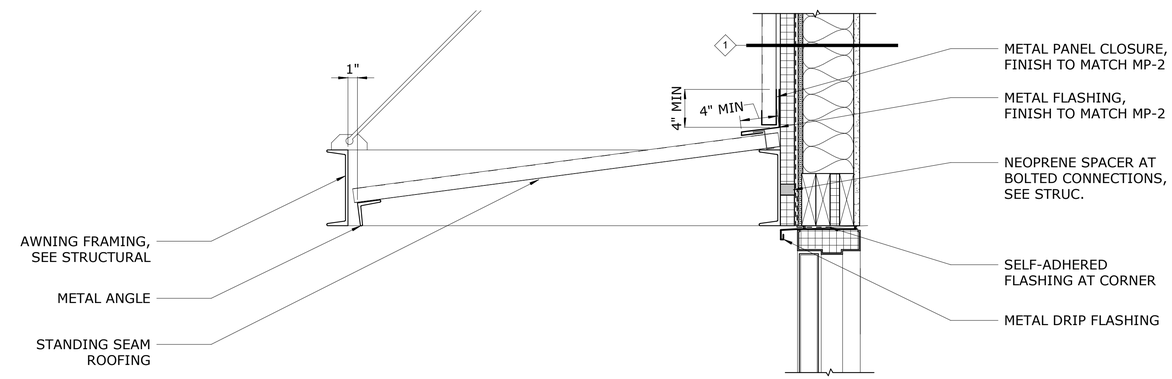

CANOPY ABOVE DOOR DETAIL (5)
1 1/2" = 1'-0"

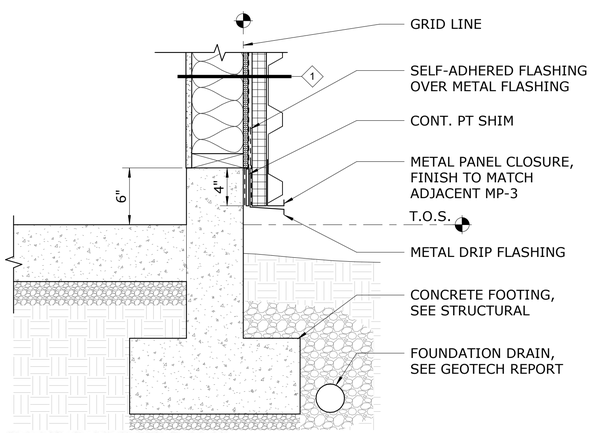

FOUNDATION EDGE DETAIL (3)
1 1/2" = 1'-0"

STRONGWORK ARCHITECTURE

NO.	DATE	BY	REVISION

NOTICE
0 1/2 1
IF THIS BAR DOES NOT MEASURE 1" THEN DRAWING IS NOT TO SCALE

SD DESIGNED
DH DRAWN
AA CHECKED

REGISTERED ARCHITECT ALAN P. ARMSTRONG PORTLAND, OREGON STATE OF OREGON

WEST YOST Water. Engineered.

Sweet Home Oregon at its best!

MAHLER WATER RECLAMATION FACILITY IMPROVEMENTS PROJECT PHASE 1

ARCHITECTURAL DETAILS - MISCELLANEOUS DETAILS

PROJECT NO.: 936-50-21-09 | SCALE 1 1/2" = 1'-0" | DATE August 2022

SHEET A-005

39 of 135

7/29/2022 9:24:27 AM Autodesk Docs://Sweet Home WWTP/21009 Sweet Home WWTP - AREA 42 - BLOWER AND ELECT.rvt

DocuSign Envelope ID: 09934EE9-0C55-40A3-8631-9C0AF6797111

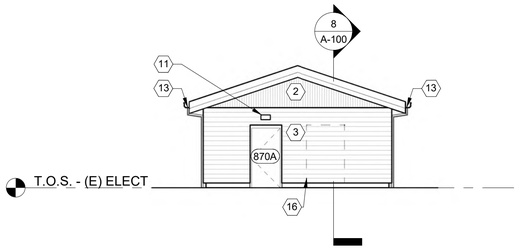

EXTERIOR ELEVATION SE - SOUTH ELECT BLDG (1)
1/8" = 1'-0"

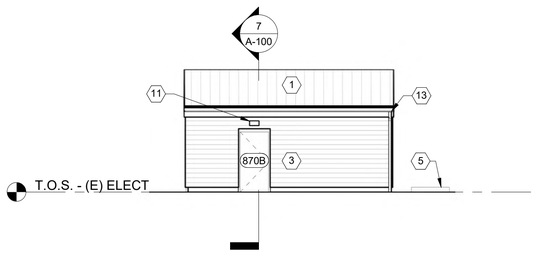

EXTERIOR ELEVATION NE - SOUTH ELECT BLDG (2)
1/8" = 1'-0"

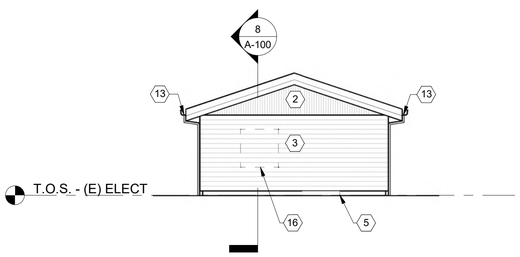

EXTERIOR ELEVATION NW - SOUTH ELECT BLDG (3)
1/8" = 1'-0"

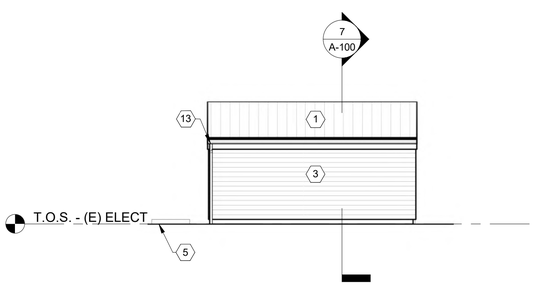

EXTERIOR ELEVATION SW - SOUTH ELECT BLDG (4)
1/8" = 1'-0"

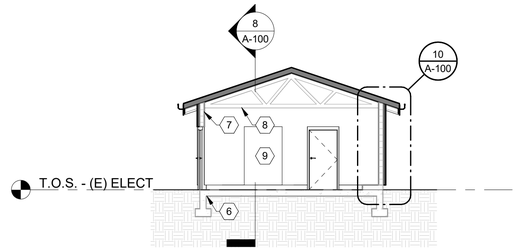

BUILDING SECTION 1 - SOUTH ELECT BLDG (7)
1/8" = 1'-0"

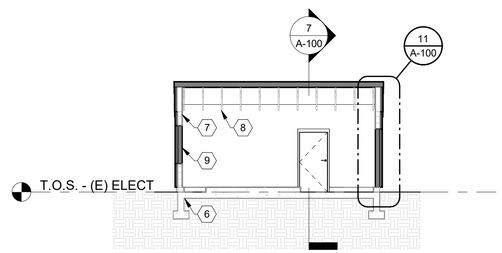

BUILDING SECTION 2 - SOUTH ELECT BLDG (8)
1/8" = 1'-0"

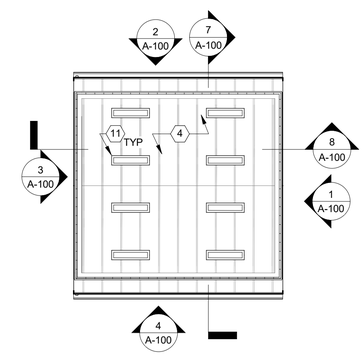

RCP - SOUTH ELECT BLDG (9)
1/8" = 1'-0"

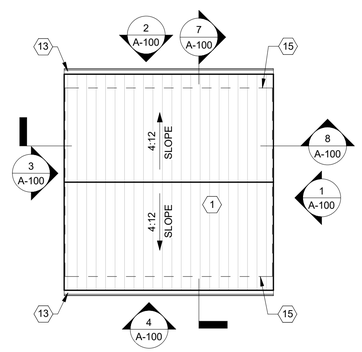

ROOF PLAN - SOUTH ELECT BLDG (5)
1/8" = 1'-0"

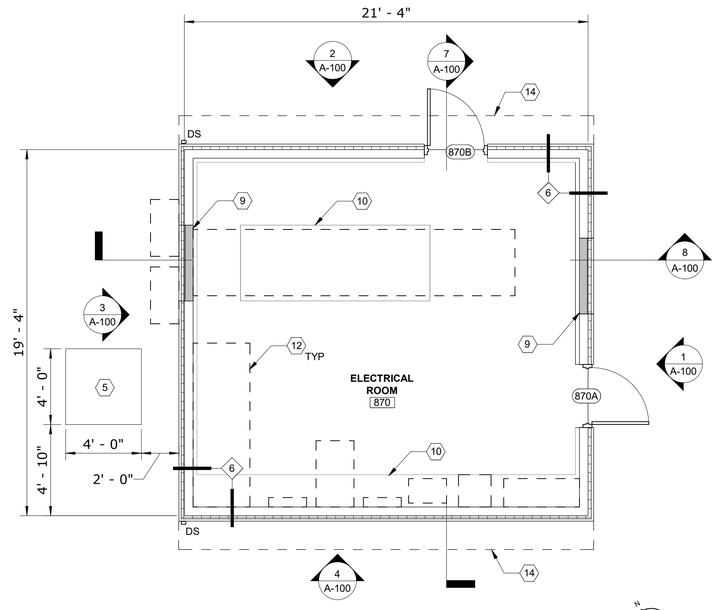

FLOOR PLAN - SOUTH ELEC BLDG (6)
1/4" = 1'-0"

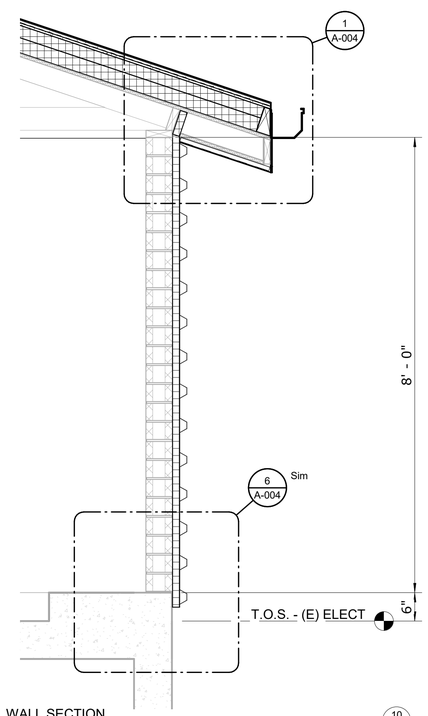

WALL SECTION (10)
3/4" = 1'-0"

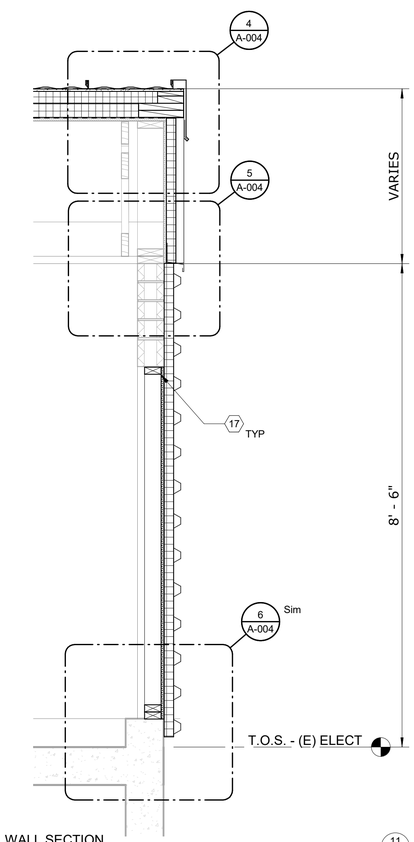

WALL SECTION (11)
3/4" = 1'-0"

KEYNOTES

1 STANDING SEAM METAL ROOF PANEL, MP-1
2 MP-2
3 MP-3
4 OPEN TO (E) STRUCTURE
5 EXTERIOR EQUIPMENT PAD - SEE MECHANICAL
6 (E) CONCRETE FLOOR AND FOOTING
7 (E) BRICK MASONRY UNIT WALL
8 (E) STRUCTURAL TRUSS
9 PENETRATIONS AT INFILL - SEE MEP
10 (E) EQUIP PAD - VFY EXISTING
11 LIGHT FIXTURE - SEE ELECTRICAL
12 PANEL / ELEC EQUIPMENT - SEE ELECTRICAL
13 METAL DOWNSPOUT AT METAL GUTTER
14 EDGE OF (E) SOFFIT ABOVE
15 EDGE OF WALL BELOW
16 INFILL BEHIND AT (E) MASONRY
17 PRESSURE-TREATED WOOD WHEN IN CONTACT W/ CONCRETE OR MASONRY

STRONGWORK
ARCHITECTURE

NO.	DATE	BY	REVISION

NOTICE
0 1/2 1
IF THIS BAR DOES NOT MEASURE 1" THEN DRAWING IS NOT TO SCALE

SD DESIGNED
DH DRAWN
AA CHECKED

REGISTERED ARCHITECT ALAN P. ARMSTRONG PORTLAND, OREGON STATE OF OREGON

WEST YOST
Water. Engineered.

Sweet Home Oregon at its best!

MAHLER WATER RECLAMATION FACILITY IMPROVEMENTS PROJECT PHASE 1

SOUTH ELECTRICAL BUILDING PLAN, ELEVATIONS, & SECTIONS

PROJECT NO.: 936-50-21-09 | SCALE: As indicated | DATE: August 2022

SHEET A-100

7/29/2022 9:29:39 AM Autodesk Docs://Sweet Home WWTP/21009 Sweet Home WWTP - EXISTING ELECT BLDG.rvt

DocuSign Envelope ID: 09934EE9-0C55-40A3-8631-9C0AF6797111

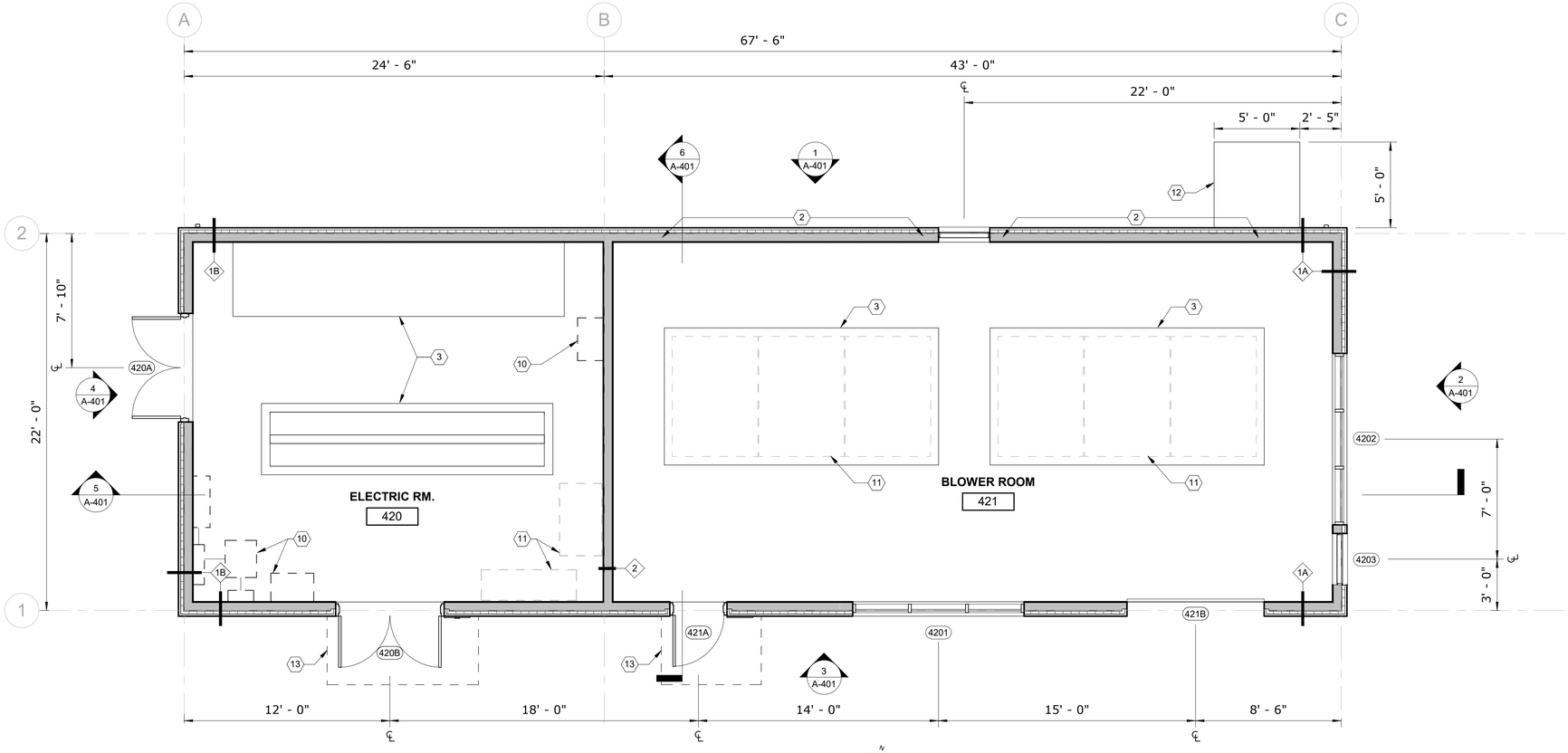

MEB BLDG - FLOOR PLAN
1/4" = 1'-0"

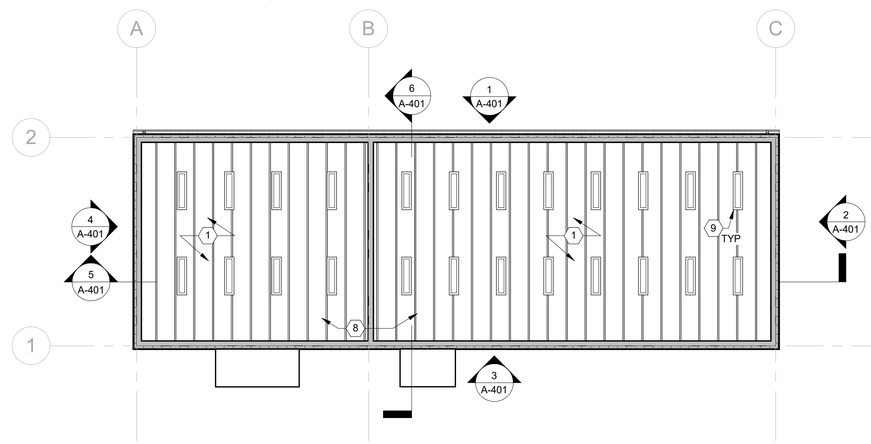

MEB BLDG - RCP
1/8" = 1'-0"

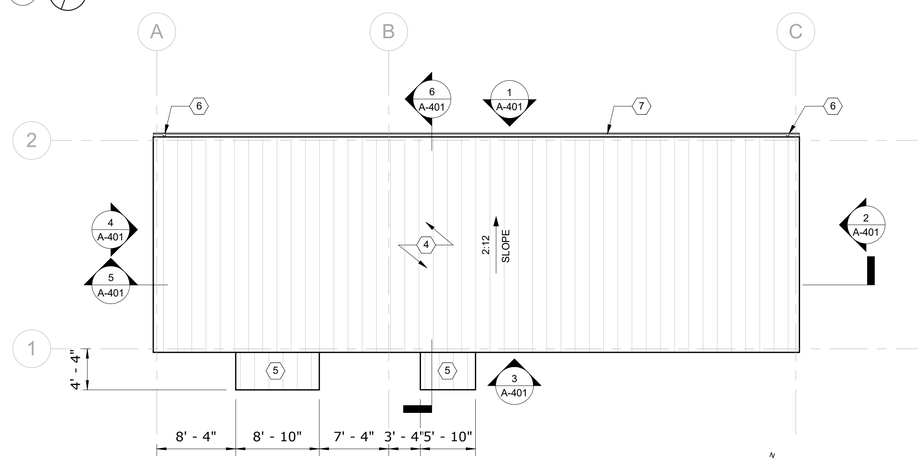

MEB BLDG - ROOF PLAN
1/8" = 1'-0"

KEYNOTES

1 OPEN TO STRUCTURE
2 FRAMING BLOCKOUTS FOR FUTURE EQUIPMENT - SEE STRUCTURAL
3 EQUIPMENT PAD - SEE STRUCTURAL
4 STANDING SEAM METAL ROOFING PANEL, MP-1
5 STANDING SEAM ROOFING AT STEEL CANOPY - SEE STRUCTURAL
6 METAL DOWNSPOUT
7 METAL GUTTER
8 HVAC - SEE MECHANICAL
9 LIGHT FIXTURE - SEE ELECTRICAL
10 PANEL / ELEC EQUIPMENT - SEE ELECTRICAL
11 FUTURE EQUIPMENT, NIC
12 EXTERIOR EQUIPMENT PAD - SEE MECHANICAL
13 EDGE OF CANOPY ABOVE

STRONGWORK
ARCHITECTURE

NO.	DATE	BY	REVISION

NOTICE
0 1/2 1
IF THIS BAR DOES NOT MEASURE 1" THEN DRAWING IS NOT TO SCALE

SD DESIGNED
DH DRAWN
AA CHECKED

REGISTERED ARCHITECT ALAN P. ARMSTRONG PORTLAND, OREGON STATE OF OREGON

WEST YOST
Water. Engineered.

Sweet Home Oregon at its best!

MAHLER WATER RECLAMATION FACILITY IMPROVEMENTS PROJECT PHASE 1

MAIN ELECTRICAL & BLOWER BUILDING FLOOR, ROOF, AND RCP PLAN

PROJECT NO.: 936-50-21-09 | SCALE As indicated | DATE August 2022

SHEET A-400

7/29/2022 9:24:28 AM Autodesk Docs://Sweet Home WWTP/21009 Sweet Home WWTP - AREA 42 - BLOWER AND ELECT.rvt

DocuSign Envelope ID: 09934EE9-0C55-40A3-8631-9C0AF6797111

KEYNOTES

1 STANDING SEAM METAL ROOFING PANEL, MP-1
2 MP-2
3 MP-3
4 DOWNSPOUT
5 GUTTER
6 CANOPY
7 LIGHT FIXTURE - SEE ELECTRICAL

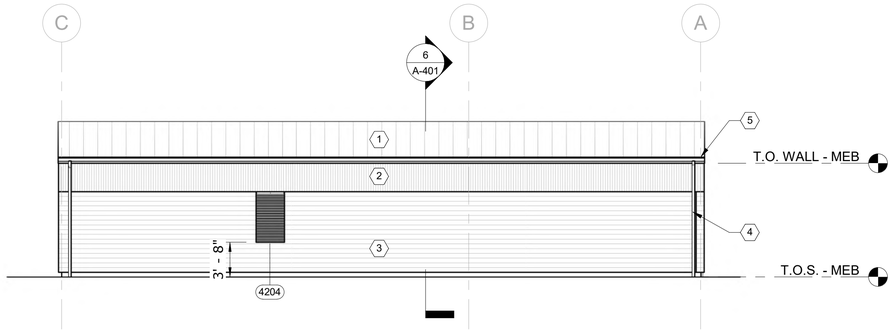

BUILDING ELEVATION - NORTH 1
1/8" = 1'-0"

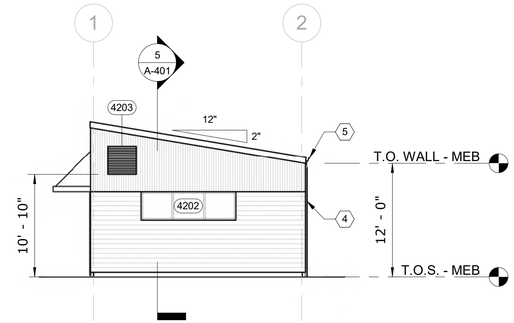

BUILDING ELEVATION - EAST 2
1/8" = 1'-0"

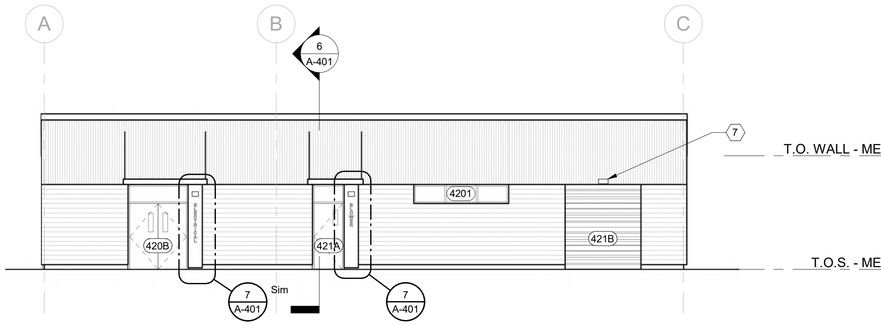

BUILDING ELEVATION - SOUTH 3
1/8" = 1'-0"

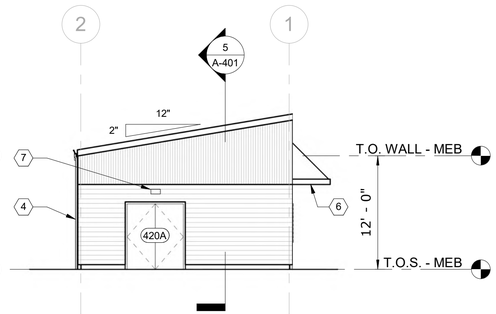

BUILDING ELEVATION - WEST 4
1/8" = 1'-0"

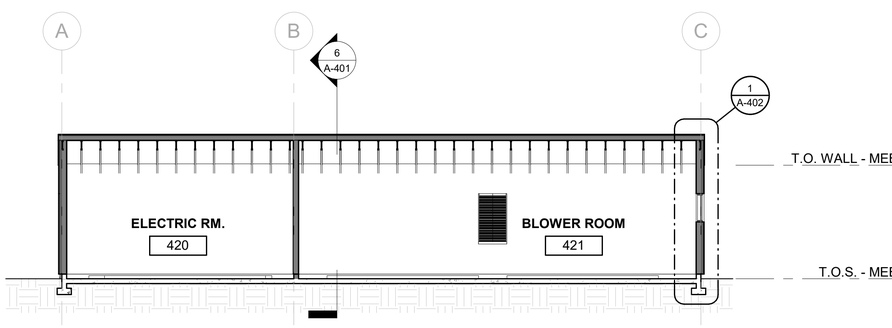

BUILDING SECTION - 1 5
1/8" = 1'-0"

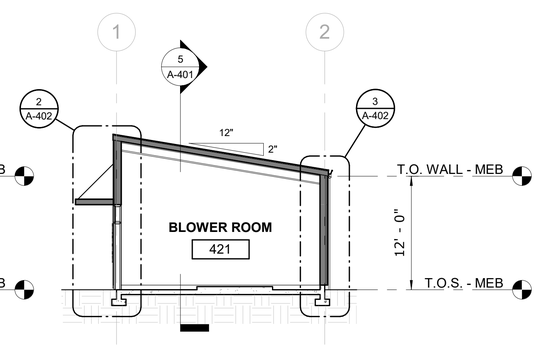

BUILDING SECTION - 2 6
1/8" = 1'-0"

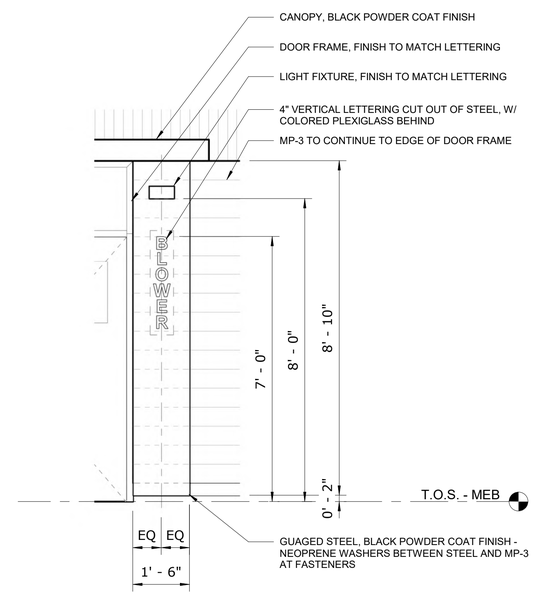

TYPICAL ROOM SIGNAGE ELEVATION 7
1/2" = 1'-0"

STRONGWORK
ARCHITECTURE

NO.	DATE	BY	REVISION

NOTICE
0 1/2 1
IF THIS BAR DOES NOT MEASURE 1" THEN DRAWING IS NOT TO SCALE

SD DESIGNED
DH DRAWN
AA CHECKED

REGISTERED ARCHITECT ALAN P. ARMSTRONG PORTLAND, OREGON STATE OF OREGON

WEST YOST
Water. Engineered.

Sweet Home Oregon at its best!

MAHLER WATER RECLAMATION FACILITY IMPROVEMENTS PROJECT PHASE 1

MAIN ELECTRICAL & BLOWER BUILDING ELEVATIONS AND SECTIONS

PROJECT NO.: 936-50-21-09 | SCALE: As indicated | DATE: August 2022

SHEET
A-401

7/29/2022 9:24:30 AM Autodesk Docs://Sweet Home WWTP/21009 Sweet Home WWTP - AREA 42 - BLOWER AND ELECT.rvt

DocuSign Envelope ID: 09934EE9-0C55-40A3-8631-9C0AF6797111

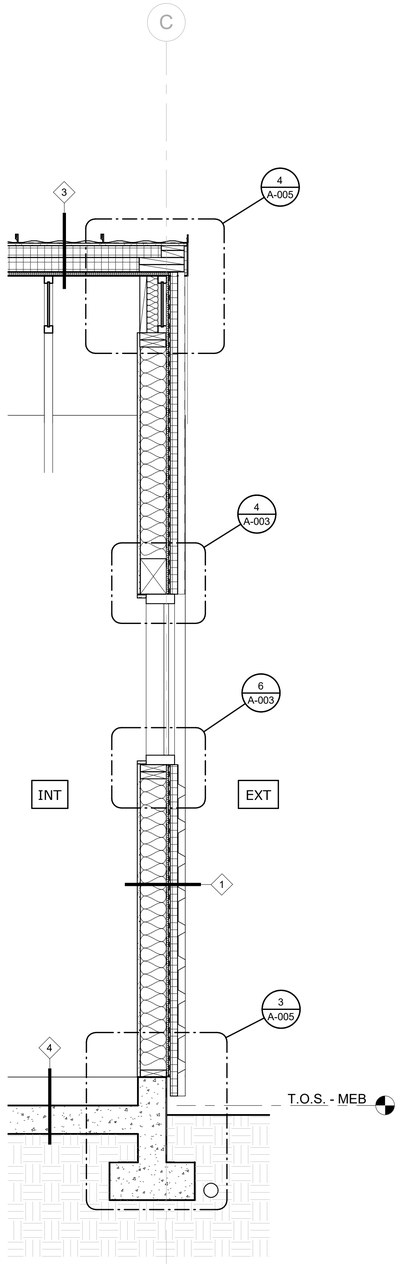

WALL SECTION 1
3/4" = 1'-0"

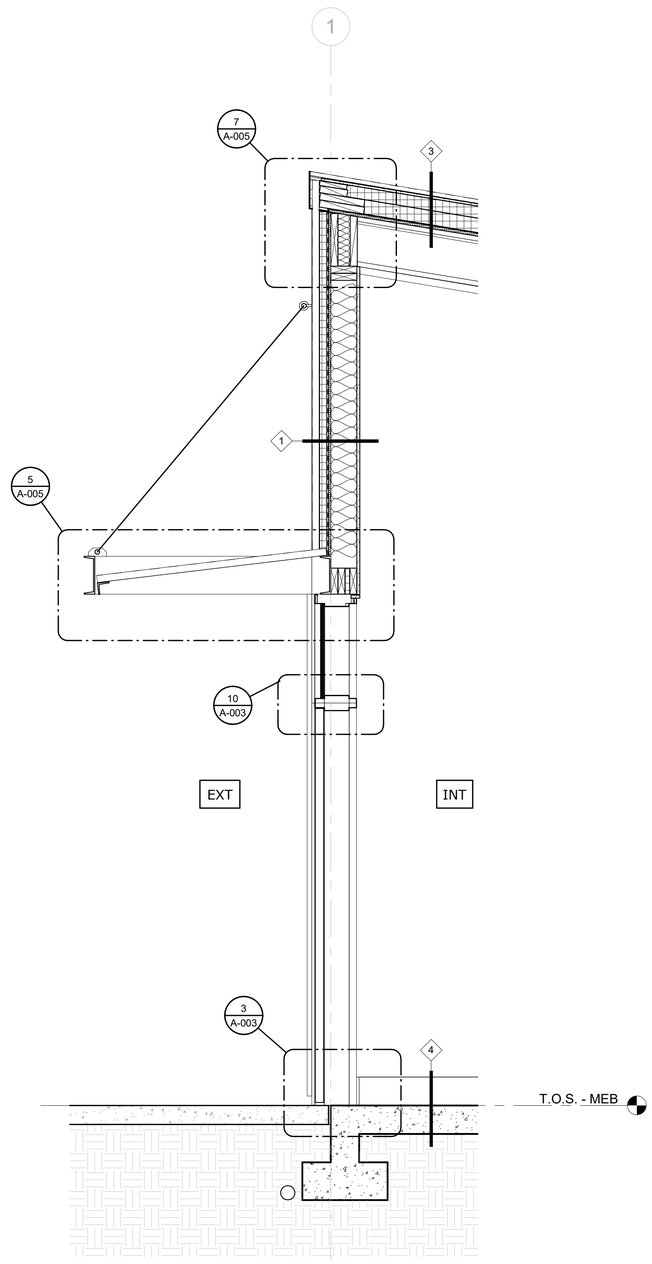

WALL SECTION 2
3/4" = 1'-0"

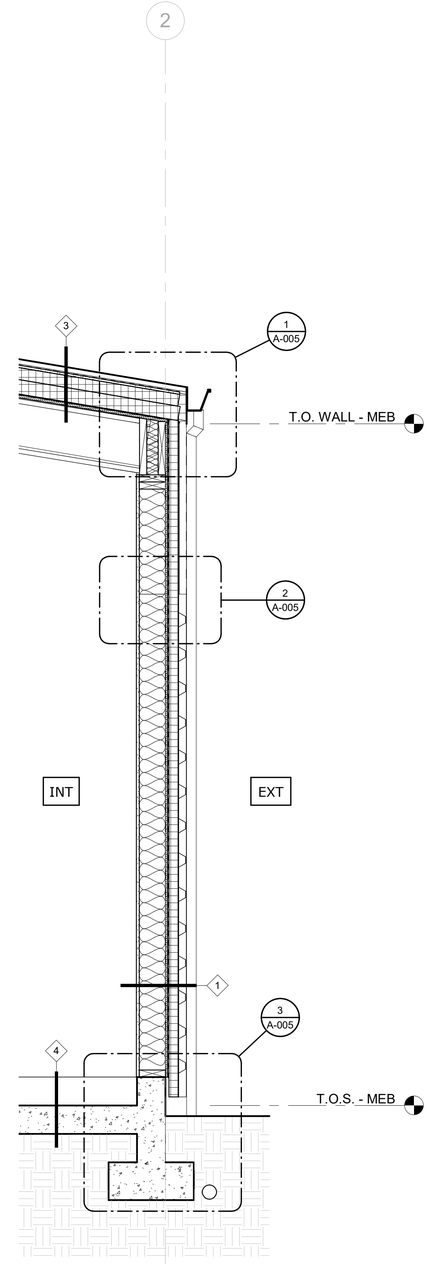

WALL SECTION 3
3/4" = 1'-0"

STRONGWORK
ARCHITECTURE

NO.	DATE	BY	REVISION

NOTICE
0 1/2 1
IF THIS BAR DOES NOT MEASURE 1" THEN DRAWING IS NOT TO SCALE

SD
DESIGNED
DH
DRAWN
AA
CHECKED

REGISTERED ARCHITECT
ALAN P. ARMSTRONG
PORTLAND, OREGON
STATE OF OREGON

WEST YOST
Water. Engineered.

Sweet Home
Oregon at its best!

MAHLER WATER RECLAMATION FACILITY IMPROVEMENTS PROJECT PHASE 1

MAIN ELECTRICAL & BLOWER BUILDING WALL SECTIONS

PROJECT NO.: 936-50-21-09 | SCALE 3/4" = 1'-0" | DATE August 2022

SHEET
A-402

7/29/2022 9:24:30 AM Autodesk Docs://Sweet Home WWTP/21009 Sweet Home WWTP - AREA 4/2 - BLOWER AND ELECT.rvt

DocuSign Envelope ID: 09934EE9-0C55-40A3-8631-9C0AF6797111

STRUCTURAL ABBERVIATIONS

AB	ANCHOR BOLT
ABV	ABOVE
AL	ALUMINUM
ALT	ALTERNATE
ARCH	ARCHITECT OR ARCHITECTURE
ASSY	ASSEMBLY
AVG	AVERAGE
@	AT
B–B	BACK TO BACK
BM	BEAM
BOT	BOTTOM
BRG	BEARING
CC	CENTER TO CENTER
CIP	CAST–IN–PLACE
C–J	CONTROL JOINT
CJ	CONSTRUCTION JOINT
CJP	COMPLETE JOINT PENETRATION
CL or ℄	CENTERLINE
CLR	CLEAR, CLEARANCE
CMU	CONCRETE MASONRY UNIT
COL	COLUMN
CONC	CONCRETE
CONST	CONSTRUCTION
CONT	CONTINUOUS
CTR	CENTERED
CTRSK	COUNTERSINK
DBL	DOUBLE
DEG	DEGREE
DET	DETAIL
DF	DOUGLAS FIR
DIAG	DIAGONAL
DIA or Ø	DIAMETER
DIMS	DIMENSIONS
DL	DEAD LOAD
DN	DOWN
DO	DITTO
DWG	DRAWING
DWL	DOWEL
E	EAST or EASTING
(E)	EXISTING
EA	EACH
EF	EACH FACE
EG	EXISTING GRADE
EL or ELEV	ELEVATION
EN	EDGE NAILING
ENGR	ENGINEER
EQ	EQUAL OR EQUIVALENT
EW	EACH WAY
EWEF	EACH WAY, EACH FACE
EXP JT	EXPANSION JOINT
EXT	EXTERIOR
FF	FINISHED FLOOR
FG	FINISH GRADE
FNDTN	FOUNDATION
FOC	FACE OF CONCRETE
FOF	FACE OF FINISH
FOM	FACE OF MASONRY
FOS	FACE OF STUD
FRP	FIBERGLASS REINFORCED PLASTIC
FS	FAR SIDE
FTG	FOOTING
GA	GAUGE
GALV	GALVANIZED
GLB	GLUED LAMINATED BEAM
GSN	GENERAL STRUCTURAL NOTES
H	HEIGHT
HCA	HEADED CONCRETE ANCHOR
HDR	HEADER
HK	HOOK
HORIZ	HORIZONTAL
HSB	HIGH STRENGTH BOLT
HSS	HOLLOW STRUCTURAL SECTION
IN	INCH
INT	INTERIOR
ID	INTERIOR DIAMETER
L	LENGTH
LBS	POUNDS
LL	LIVE LOAD
LLBB	LONG LEG BACK TO BACK
LLV	LONG LEG VERTICAL
LOC	LOCATION
LT	LEFT
MAX	MAXIMUM
MB	MACHINE BOLT
MCJ	MASONRY CONTROL JOINT
MFR	MANUFACTURER
MIN	MINIMUM
MISC	MISCELLANEOUS
MJ	MECHANICAL JOINT
MOD	MODIFY, MODIFIED
MPH	MILES PER HOUR
N	NORTH
(N)	NEW
NO or #	NUMBER
NS	NEAR SIDE
NTS	NOT TO SCALE
OC	ON CENTER
OD	OUTSIDE DIAMETER
OH	OPPOSITE HAND
OPP	OPPOSITE
OWSJ	OPEN WEB STEEL JOIST
PCF	POUNDS PER CUBIC FOOT
PDF	POWDER DRIVEN FASTENER
PE	PLAIN END
PEMB	PRE–ENGINEERED METAL BUILDING
PL	PLATE
PLY	PLYWOOD
PJP	PARTIAL JOINT PENETRATION
PRV	PRESSURE RELIEF VALVE
PSF	POUNDS PER SQUARE FOOT
PSI	POUNDS PER SQUARE INCH
PT	PRESERVATIVE TREATED
PVC	POLYVINYL CHLORIDE
R	RADIUS
REINF	REINFORCEMENT, REINFORCING
REQD	REQUIRED
RQMTS	REQUIREMENTS
REV	REVISED
RS	ROUGH SAWN
RT	RIGHT
S	SOUTH
SC	SLIP CRITICAL
SCHED	SCHEDULE
SECT	SECTION
SF	SQUARE FOOT
SHT	SHEET
SHTG	SHEATHING
SIM	SIMILAR
SLBB	SHORT LEG BACK TO BACK
SL	SNOW LOAD
SLV	SHORT LEG VERTICAL
SMS	SHEET METAL SCREW
SP	SPACING
SPEC	SPECIFICATIONS
SPT	SUPPORT
SQ	SQUARE
SS	STAINLESS STEEL
STD	STANDARD
STA	STATION
STIFF	STIFFENER
STR	STRUCTURE
STRUCT	STRUCTURAL
SYM	SYMMETRICAL
T	TOP
T&B	TOP AND BOTTOM
T&G	TONGUE AND GROOVE
TEMP	TEMPORARY
TOC	TOP OF CONCRETE
TOF	TOP OF FOOTING
TOM	TOP OF MASONRY
TOS	TOP OF STEEL, TOP OF SLAB
TRANS	TRANSVERSE
TYP	TYPICAL
UNO	UNLESS NOTED OTHERWISE
V or VERT	VERTICAL
W	WEST
W/	WITH
W/O	WITHOUT
WF	WIDE FLANGE
WP	WORK POINT
WT	WEIGHT
WWF	WELDED WIRE FABRIC
<	GREATER THAN
>	LESS THAN

CONTRACTOR RESPONSIBILITIES

CONTRACTOR RESPONSIBILITIES: CARRY OUT THE REQUIREMENTS OF THESE DOCUMENTS THROUGH THE USE OF THE CONTRACTOR'S EFFORTS OR THAT OF SUB–CONTRACTORS.

PROVIDE ALL CONSTRUCTION METHODS, TECHNIQUES, SEQUENCING AND SAFETY REQUIRED TO COMPLETE THE WORK. ALL INSTRUCTIONS CONTAINED IN THESE DOCUMENTS ARE INTERPRETED TO BE INSTRUCTIONS TO THE CONTRACTOR AND ARE THE RESPONSIBILITY OF THE CONTRACTOR TO FULFIL.

VERIFY EXISTING CONDITIONS PRIOR TO PROCEEDING WITH CONSTRUCTION. IMMEDIATELY BRING DISCREPANCIES TO THE ATTENTION OF THE ENGINEER OF RECORD (EOR).

MEASURE DIMENSIONS OF ANY EXISTING STRUCTURES ASSOCIATED WITH THE WORK AND COORDINATE WITH REQUIRED DIMENSIONS FOR NEW CONSTRUCTION. DRAWINGS SCALES ARE INDICATED FOR REFERENCE TO ASSIST WITH CLARIFYING THE WORK AND PROVIDING PROPORTIONS THAT RESEMBLE ACTUAL CONDITIONS. DO NOT MEASURE DRAWINGS FOR CONSTRUCTION. USE TEXT DIMENSIONS PROVIDED. REQUEST UNKNOWN DIMENSIONS FROM THE ENGINEER WITH SUFFICIENT LEAD TIME TO PREVENT CONSTRUCTION DELAYS. FIELD VERIFY DIMENSIONS.

ARRANGE FOR AND COORDINATE WORK BY TRADES AND SUPPLIERS. FACILITATE REQUIRED INSPECTIONS, SPECIAL INSPECTIONS AND TESTS SPECIFIED BY THE CONTRACT DOCUMENTS, BUILDING CODE AND PERMIT. WHERE COVERINGS OR WORK CONCEALS ITEMS OR AREAS TO BE INSPECTED PRIOR TO SATISFACTORY APPROVAL THE CONTRACTOR IS RESPONSIBLE FOR REMOVAL AND REPLACEMENT OF COVERINGS OR WORK AS NECESSARY WITHOUT COST TO THE OWNER OR ENGINEER.

THE STRUCTURES SHALL BE FULLY BRACED FOR WIND AND SEISMIC LOADS DURING CONSTRUCTION. THE CONTRACTOR SHALL BRACE THE WORK UNTIL THE PERMANENT LATERAL FORCE RESISTING SYSTEM IS COMPLETED.

INSTALL ITEMS MANUFACTURED OR SUPPLIED BY OTHERS IN ACCORDANCE WITH THE MANUFACTURER'S RECOMMENDATIONS.

WHERE DETAILS OF CONSTRUCTION ARE NOT EXPLICITLY SHOWN, PROVIDE MATERIALS AND CONSTRUCTION OF THE SAME TYPE AND CHARACTER AS THAT OF SIMILAR CONDITIONS USED ON THE PROJECT. THE ACTUAL DETAILS USED SHALL BE SUBMITTED TO THE ENGINEER FOR APPROVAL PRIOR TO ORDERING MATERIALS OR BEGINNING CONSTRUCTION.

ANY CONFLICT OR DISCREPANCY SHALL BE BROUGHT TO THE ATTENTION OF THE ENGINEER OF RECORD FOR CLARIFICATION AND RESOLUTION PRIOR TO ORDERING MATERIALS OR BEGINNING CONSTRUCTION.

GENERAL STRUCTURAL NOTES

GENERAL: DETAILS AND SECTIONS SHOWN ON THE DRAWINGS ARE TYPICAL AND APPLY TO SIMILAR SITUATIONS ELSEWHERE, EXCEPT AS OTHERWISE INDICATED. ADAPT REQUIREMENTS OF DETAILS, SECTIONS, PLANS, AND NOTES AT LOCATIONS WHERE CONDITIONS ARE SIMILAR.

CENTER ALL FOOTINGS AND PIERS UNDER COLUMNS AND WALLS ABOVE UNLESS SPECIFICALLY DIMENSIONED OTHERWISE.

STRUCTURAL DRAWINGS SHALL BE USED IN CONJUNCTION WITH JOB SPECIFICATIONS AND ARCHITECTURAL, MECHANICAL, ELECTRICAL, PLUMBING, CIVIL AND LANDSCAPE DRAWINGS. CONSULT THESE DRAWINGS FOR SLEEVES, DEPRESSIONS, AND OTHER DETAILS NOT SHOWN ON STRUCTURAL DRAWINGS.

CONTRACTOR SHALL LOCATE ALL CONCEALED UTILITIES PRIOR TO EXCAVATION OR SELECTIVE DEMOLITION WORKS. THE STRUCTURAL ENGINEER SHALL BE NOTIFIED OF POTENTIAL CONFLICTS BETWEEN FOUNDATIONS AND BURIED UTILITIES.

CODE REQUIREMENTS: THE STRUCTURES ARE DESIGNED IN ACCORDANCE WITH THE 2019 OREGON STRUCTURAL SPECIALTY CODE (OSSC) AND REFERENCE DOCUMENTS (ADM, ACI, AISC, AISI, ANSI, APA, ASCE/SEI, ASTM, AWC, AWPA, AWS, ICC, SDI, SJI, TMS, UL, WCLIB, ETC). FOLLOW ALL APPLICABLE PROVISIONS FOR ALL PHASES OF CONSTRUCTION.

TEMPORARY CONDITIONS: THE STRUCTURAL INTEGRITY OF THE COMPLETED STRUCTURE DEPENDS ON INTERACTION OF VARIOUS CONNECTED COMPONENTS. PROVIDE ADEQUATE BRACING, SHORING, AND OTHER TEMPORARY SUPPORTS AS REQUIRED TO SAFELY COMPLETE THE WORK. THE STRUCTURE SHOWN ON THE DRAWINGS HAS BEEN DESIGNED FOR STABILITY UNDER FINAL CONFIGURATION ONLY.

WALLS WHICH TIE TO UPPER SLABS SHALL NOT BE BACKFILLED UNTIL THE UPPER SLABS REACH FULL STRENGTH, UNLESS ADEQUATE BRACING IS PROVIDED AT THE TOP OF THE WALL.

EXISTING CONDITIONS: ALL EXISTING CONDITIONS, DIMENSIONS AND ELEVATIONS SHALL BE FIELD VERIFIED. THE CONTRACTOR SHALL NOTIFY THE ENGINEER OF ANY SIGNIFICANT DISCREPANCIES FROM CONDITIONS SHOWN ON THE DRAWINGS.

EXISTING STRUCTURE: INFORMATION SHOWN FOR EXISTING STRUCTURES ON THESE DRAWINGS WAS TAKEN FROM RECORD DRAWINGS PROVIDED BY THE CITY OF SWEET HOME. WORK SHOWN ON THESE PLANS ASSUMES THAT THE ORIGINAL CONSTRUCTION WAS PERFORMED IN ACCORDANCE WITH THE ORIGINAL DRAWINGS INCLUDING, BUT NOT LIMITED TO, DIMENSIONS, ELEVATIONS, MEMBER SIZES, MATERIALS, DETAILS, ETC. IT SHALL BE THE RESPONSIBILITY OF THE CONTRACTOR TO VERIFY THE CONDITIONS RELATING TO THE EXISTING STRUCTURES AND TO NOTIFY THE ENGINEER IMMEDIATELY OF ANY DISCREPANCIES OR CONFLICTS.

EXERCISE EXTREME CARE AND CAUTION WHEN EXCAVATING AND FILLING ADJACENT TO EXISTING STRUCTURES. UNDER NO CIRCUMSTANCES SHALL THE STRUCTURAL INTEGRITY OF THE EXISTING STRUCTURES BE IMPAIRED IN ANY WAY BY CONSTRUCTION OPERATIONS AND PROCEDURES. DO NOT EXCAVATE OR DISTURB SOIL ADJACENT TO OR BENEATH EXISTING FOOTINGS.

DESIGN CRITERIA: THE FOLLOWING LOADS AND PARAMETERS WERE USED TO DETERMINE WIND AND SEISMIC LOADS.

VERTICAL LOADS:

DEAD LOADS:

ROOFS:	20 PSF DL (INCLUDES 5 PSF FUTURE PV SOLAR PANELS)
ELEVATED FLOORS:	20 PSF DL
CONCRETE SLABS:	150 PCF DL

GROUND SNOW LOAD: 25 PSF SL

FLOOR LIVE LOADS:

OFFICE	50 PSF LL
CORRIDORS, STAIRS	100 PSF LL
STORAGE	125 PSF LL
PROCESS	125 PSF LL, 2000 LB CONCENTRATED

LATERAL LOADS:

SEISMIC: RISK CATEGORY 3, SITE CLASS B, S_S=0.63, S_1=0.34, F_a=0.90, F_v=0.80, S_{MS}=0.57g, S_{M1}=0.27g, S_{DS}=0.38g, S_{D1}=0.18g, MCE_G=0.29g, F_{PGA}=0.90, SEISMIC DESIGN CATEGORY=D.

WIND: WIND SPEED: V=104 MPH, V_{asd}=85 MPH, EXPOSURE B.

SOIL:
ALLOWABLE SOIL BEARING PRESSURE FOR BELOW GRADE STRUCTURES: 5,000 PSF
ALLOWABLE SOIL BEARING PRESSURE FOR AT–GRADE STRUCTURES: 2,000 PSF
PREPARE SITE SOILS IN ACCORDANCE WITH GEOTECHNICAL ENGINEERING REPORT BY McMILLEN JACOBS ASSOCIATES, JULY 2022. CONTACT McMILLEN JACOBS ASSOCIATES TO OBSERVE THE FOUNDATION EXCAVATED SURFACE PRIOR TO PLACEMENT OF STRUCTURAL FILL. ALLOW McMILLEN JACOBS TO OBSERVE PLACEMENT OF STRUCTURAL FILL. McMILLEN JACOBS ASSOCIATES: (503) 227–1800.

NO.	DATE	BY	REVISION

NOTICE
0 ½ 1
IF THIS BAR DOES NOT MEASURE 1" THEN DRAWING IS NOT TO SCALE

ATG DESIGNED
ATG DRAWN
PVM CHECKED

STRUCTURAL REGISTERED PROFESSIONAL ENGINEER 64239PE OREGON JANUARY 14, 2003 ALLAN T GOFFE
EXPIRES 6/30/2023

ACE ENGINEERING LLC
professional structural engineering

WEST YOST
Water. Engineered.

Sweet Home Oregon at its best!

MAHLER WATER RECLAMATION FACILITY IMPROVEMENTS PROJECT PHASE 1

GENERAL STRUCTURAL NOTES
STRUCTURAL ABBREVIATIONS

PROJECT NO.: 936-50-21-09 | SCALE: NONE | DATE: August 2022

SHEET
S-001

DocuSign Envelope ID: 09934EE9-0C55-40A3-8631-9C0AF6797111

SPECIAL INSPECTIONS:

VERIFICATION AND INSPECTION	CONTINUOUS	PERIODIC	REFERENCED STANDARD
OSSC TABLE 1705.6, SOILS:			
1. VERIFY MATERIALS BELOW SHALLOW FOUNDATIONS ARE ADEQUATE TO ACHIEVE THE DESIGN BEARING CAPACITY.		X	
2. VERIFY EXCAVATIONS ARE EXTENDED TO PROPER DEPTH AND HAVE REACHED PROPER MATERIAL.		X	
3. PERFORM CLASSIFICATION AND TESTING OF COMPACTED FILL MATERIALS.		X	
4. VERIFY USE OF PROPER MATERIALS, DENSITIES AND LIFT THICKNESSES DURING PLACEMENT AND COMPACTION OF COMPACTED FILL.	X		
5. PRIOR TO PLACEMENT OF COMPACTED FILL, INSPECT SUBGRADE AND VERIFY THAT SITE HAS BEEN PREPARED PROPERLY.		X	
OSSC TABLE 1705.3, CONCRETE CONSTRUCTION:			
1. INSPECT REINFORCEMENT AND VERIFY PLACEMENT.		X	OSSC 1908.4
2. REINFORCING BAR WELDING:			
A. VERIFY WELDABILITY OF REINFORCING BARS OTHER THAN ASTM A706.		X	
B. INSPECT SINGLE PASS FILLET WELDS, MAXIMUM 5/16".		X	
C. INSPECT ALL OTHER WELDS.	X		
3. INSPECT ANCHORS CAST IN CONCRETE.		X	
4. INSPECT ANCHORS POST INSTALLED IN HARDENED CONCRETE MEMBERS.			
A. ADHESIVE ANCHORS INSTALLED IN HORIZONTALLY OR UPWARDLY INCLINED ORIENTATIONS TO RESIST SUSTAINED TENSION LOADS.	X		
B. MECHANICAL ANCHORS AND ADHESIVE ANCHORS NOT DEFINED IN 4.A.		X	
5. VERIFY USE OF REQUIRED MIX DESIGN.		X	OSSC 1904.1, 1904.2 1908.2, 1908.3
6. PRIOR TO CONCRETE PLACEMENT, FABRICATE SPECIMENS FOR STRENGTH TESTS, PERFORM SLUMP AND AIR CONTENT TESTS AND DETERMINE THE TEMPERATURE OF THE CONCRETE.	X		OSSC 1908.10
7. INSPECT CONCRETE AND SHOTCRETE PLACEMENT FOR PROPER APPLICATION TECHNIQUES.	X		OSSC 1908.6, 1908.7 1908.8
8. VERIFY MAINTENANCE OF SPECIFIED CURING TEMPERATURE AND TECHNIQUES.		X	OSSC 1908.9
9. INSPECT PRESTRESSED CONCRETE FOR:			
A. APPLICATION OF PRESTRESSING FORCES.	X		
B. GROUTING OF BONDED PRESTRESSING TENDONS.	X		
10. INSPECT ERECTION OF PRECAST CONCRETE MEMBERS.		X	
11. VERIFY IN-SITU CONCRETE STRENGTH PRIOR TO STRESSING OF TENDONS IN POST-TENSIONED CONCRETE AND PRIOR TO REMOVAL OF SHORES AND FORMS FROM BEAMS AND STRUCTURAL SLABS.		X	
12. INSPECT FORMWORK FOR SHAPE, LOCATION AND DIMENSIONS OF THE CONCRETE MEMBER BEING FORMED.		X	
OSSC TABLE 1705.2, STEEL CONSTRUCTION:			
1. MATERIAL VERIFICATION OF HIGH STRENGTH BOLTS, NUTS AND WASHERS:			
A. IDENTIFICATION MARKINGS TO CONFORM TO ASTM STANDARDS AND SPECIFIED IN THE APPROVED CONSTRUCTION DOCUMENTS.		X	AISC 360, SECTION A3.3 AND APPLICABLE ASTM MATERIAL STANDARDS
B. MANUFACTURER'S CERTIFICATE OF COMPLIANCE REQUIRED.		X	
2. INSPECTION OF HIGH STRENGTH BOLTING:			
A. SNUG TIGHT JOINTS.		X	AISC 360 SECTION M2.5
B. PRETENSIONED AND SLIP CRITICAL JOINTS USING TURN OF THE NUT WITHOUT MATCHMAKING, TWIST OFF BOLT OR DIRECT TENSION INDICATOR METHODS OF INSTALLATION.		X	
C. PRETENSIONED AND SLIP CRITICAL JOINTS USING TURN OF THE NUT METHOD MATCHMAKING OR CALIBRATED WRENCH METHODS OF INSTALLATION.	X		
3. MATERIAL VERIFICATION OF STRUCTURAL STEEL:			
A. FOR STRUCTURAL STEEL, IDENTIFICATION MARKINGS TO CONFORM TO AISC 360.		X	AISC 360, SECTION N2.1
B. FOR OTHER STEEL, IDENTIFICATION MARKINGS TO CONFORM TO ASTM STANDARDS SPECIFIED IN THE APPROVED CONSTRUCTION DOCUMENTS.		X	APPLICABLE ASTM MATERIAL STANDARDS
C. MANUFACTURER'S CERTIFIED TEST REPORTS.		X	
4. MATERIAL VERIFICATION OF COLD FORMED STEEL DECK:			
A. MANUFACTURER'S CERTIFIED TEST REPORTS.		X	
5. MATERIAL VERIFICATION OF WELD FILLER MATERIALS:			
A. IDENTIFICATION MARKINGS TO CONFORM TO AWS SPECIFICATION IN THE APPROVED CONSTRUCTION DOCUMENTS.		X	AISC 360, SECTION A3.5 AND APPLICABLE AWS A5 DOCUMENTS
B. MANUFACTURER'S CERTIFICATE OF COMPLIANCE REQUIRED.		X	
6. INSPECTION OF WELDING:			
A. STRUCTURAL STEEL AND COLD FORMED STEEL DECK			AWS D1.1
1. COMPLETE AND PARTIAL PENETRATION GROOVE WELDS.	X		
2. MULTIPASS FILLET WELDS.	X		
3. SINGLE PASS FILLET WELDS > 5/16".	X		
4. PLUG AND SLOT WELDS.	X		
5. SINGLE PASS FILLET WELDS ≤ 5/16".		X	AWS D1.3
6. FLOOR AND ROOF DECK WELDS.		X	
B. REINFORCING STEEL:			AWS D1.4 ACI 318, SECTION 4.2.2
1. VERIFY WELDABILITY OF REINFORCING BARS OTHER THAN ASTM A706.		X	
2. REINFORCING STEEL RESISTING FLEXURAL AND AXIAL FORCES IN INTERMEDIATE AND SPECIAL MOMENT FRAMES, AND BOUNDARY ELEMENTS OF SPECIAL STRUCTURAL WALLS OF CONCRETE AND SHEAR REINFORCEMENT.	X		
3. SHEAR REINFORCEMENT.	X		
4. OTHER REINFORCING STEEL.		X	
7. INSPECTION OF STEEL FRAME JOINT DETAILS FOR COMPLIANCE:			
A. DETAILS SUCH AS BRACING AND STIFFENING.		X	
B. MEMBER LOCATION.		X	
C. APPLICATION OF JOINT DETAILS AT EACH CONNECTION.		X	

NOTE: SPECIAL INSPECTION SHALL BE PROVIDED FOR ALL STRUCTURAL ELEMENTS REQUIRING SPECIAL INSPECTION REGARDLESS OF WHETHER THE WORK IS PERFORMED ONSITE OR OFFSITE (SHOP).

STRUCTURAL SUBMITTALS

SHOP DRAWINGS AND PRODUCT DATA SHALL BE SUBMITTED TO THE ENGINEER PRIOR TO ORDERING, FABRICATION AND CONSTRUCTION REGARDING ALL STRUCTURAL ITEMS INCLUDING:

CONCRETE MIX DESIGNS
CONCRETE AND MASONRY REINFORCING STEEL
ITEMS EMBEDDED IN CONCRETE
STRUCTURAL STEEL

IF THE SHOP DRAWINGS DIFFER FROM OR ADD TO THE DESIGN OF THE STRUCTURAL DRAWINGS, THEY SHALL BEAR THE SEAL AND SIGNATURE OF A STRUCTURAL ENGINEER REGISTERED IN THE STATE OF OREGON. ANY CHANGES TO THE STRUCTURAL DRAWINGS SHALL BE SUBMITTED TO THE ENGINEER AND ARE SUBJECT TO THE REVIEW AND ACCEPTANCE OF THE ENGINEER.

DESIGN DRAWINGS, SHOP DRAWINGS, AND CALCULATIONS FOR THE DESIGN AND FABRICATION OF ITEMS THAT ARE DESIGNED BY OTHERS, INCLUDING: COLD FORMED METAL STUDS, WINDOW WALL AND ALL OTHER GLAZING SYSTEMS. SHALL BEAR THE SEAL AND SIGNATURE OF A CIVIL OR STRUCTURAL ENGINEER REGISTERED IN THE STATE OF OREGON AND SHALL BE SUBMITTED TO THE ENGINEER PRIOR TO FABRICATION. CALCULATIONS SHALL BE INCLUDED FOR ALL CONNECTIONS TO THE STRUCTURE, CONSIDERING LOCALIZED EFFECTS ON THE STRUCTURAL ELEMENTS INDUCED BY THE CONNECTION LOADS. DESIGN SHALL BE BASED ON THE REQUIREMENTS OF THE OSSC.

SHOP DRAWINGS WILL BE REVIEWED FOR GENERAL COMPLIANCE WITH THE DESIGN INTENT OF THE CONTRACT DOCUMENTS ONLY. IT SHALL BE THE RESPONSIBILITY OF THE CONTRACTOR TO VERIFY COMPLIANCE WITH THE CONTRACT DOCUMENTS AS TO QUANTITY, LENGTH, ELEVATIONS, DIMENSIONS, ETC. CONTRACTOR SHALL NOT BE RELIEVED FROM RESPONSIBILITY FOR ERRORS OR OMISSIONS IN SHOP DRAWINGS OR SUBMITTALS BY THE ENGINEER'S REVIEW.

BRACING AND SHORING

DURING CONSTRUCTION THE STABILITY AND INTEGRITY OF THE EXISTING STRUCTURES SHALL BE MAINTAINED AT LEVELS GENERALLY ACCEPTABLE WITHIN THE CONSTRUCTION INDUSTRY BY THE USE OF BRACING, SHORING AND UNDERPINNING UNTIL THE PROPOSED STRUCTURAL MODIFICATIONS ARE COMPLETED. IN NO CASE SHALL THE EXISTING STRUCTURE BE ALLOWED TO BECOME UNSAFE DURING CONSTRUCTION.

BRACING AND SHORING SYSTEMS REQUIRED TO PROVIDE TEMPORARY SUPPORT OF THE EXISTING STRUCTURE DURING CONSTRUCTION SHALL BE DESIGNED TO SUPPORT THE DEAD, LIVE, SOIL, EARTHQUAKE AND WIND LOADS THAT MAY BE IMPOSED ON THE STRUCTURE DURING CONSTRUCTION IN ACCORDANCE WITH INDUSTRY STANDARDS AND GENERALLY ACCEPTED ENGINEERING PRINCIPLES.

THE CONTRACTOR SHALL SUBMIT PROPOSED SHORING, BRACING AND UNDERPINNING SYSTEMS TO THE ENGINEER OF RECORD FOR REVIEW. THE CONTRACTOR SHALL BE RESPONSIBLE FOR THE SUCCESSFUL COMPLETION OF THE WORK.

NO CONSTRUCTION OF THE BRACING, SHORING OR UNDERPINNING SYSTEMS, DEMOLITION FOR ITS CONSTRUCTION OR ORDERING MATERIALS TAKE PLACE UNTIL THE CONTRACTOR HAS RECEIVED REVIEWED SUBMITTALS BY THE ENGINEER OF RECORD.

THE BRACING, SHORING AND UNDERPINNING SUBMITTALS SHOW LAYOUT, SIZE OF MEMBERS, CONNECTION DETAILS, CONSTRUCTION SEQUENCE AND STRUCTURAL CALCULATIONS PREPARED BY A REGISTERED CIVIL OR STRUCTURAL ENGINEER LICENSED IN THE STATE OF OREGON.

EQUIPMENT AND NON-STRUCTURAL COMPONENTS:

DETERMINE ACTUAL EQUIPMENT AND NON-STRUCTURAL COMPONENT WEIGHTS, LOCATIONS AND SIZES SUPPLIED FOR THIS PROJECT. NOTIFY ENGINEER IF WEIGHTS EXCEED ALLOWANCES AND IF EQUIPMENT FOOTPRINTS DIFFER FROM THAT SHOWN OR NOTED ON STRUCTURAL DRAWINGS.

FOR EQUIPMENT AND NON-STRUCTURAL COMPONENTS WEIGHING MORE THAN 400 POUNDS, PREPARE AND SUBMIT SEISMIC CONNECTION AND ANCHORAGE CALCULATIONS AND DETAIL SEALED AND SIGNED BY A PROFESSIONAL CIVIL OR STRUCTURAL ENGINEER REGISTERED IN THE STATE OF OREGON.

COORDINATE BETWEEN SUBCONTRACTORS TO INSURE THE FOLLOWING:

ADDITIONAL SECONDARY FRAMING IS PROVIDED AS REQUIRED. DESIGN OF EQUIPMENT SUPPORTS AND SECONDARY FRAMING BY THE VENDOR'S ENGINEER SHALL CONFORM TO OSSC REQUIREMENTS.

EDGES OF DECKING, SHEATHING, SLAB, ETC. ARE SUPPORTED AT ALL OPENINGS. PENETRATIONS MADE THROUGH STRUCTURAL MEMBERS SHALL BE REINFORCED TO CONFORM TO THE RECOMMENDATIONS OF THE VENDOR'S ENGINEER AND TO THE SATISFACTION OF THE ENGINEER OF RECORD.

OPENINGS, PENETRATIONS AND ACCESSORIES ARE LOCATED TO AVOID INTERFERENCE WITH STRUCTURAL ELEMENTS.

PRE-ENGINEERED ELEMENTS ARE DESIGN TO SUPPORT ALL WEIGHTS AND FORCES.

BRACE EQUIPMENT AND ACCESSORIES PER SMACNA SEISMIC RESTRAINT MANUAL. UNUSUAL DUCTWORK, PIPING OR CONDUIT CONFIGURATIONS THAT FALL OUTSIDE OF SMACNA MINIMUM LIMITS SHOULD BE SECURELY RESTRAINED TO PREVENT MOVEMENT.

BRACE SUSPENDED CEILINGS IN ACCORDANCE WITH ASTM E580.

NO.	DATE	BY	REVISION

NOTICE
0 ½ 1
IF THIS BAR DOES NOT MEASURE 1" THEN DRAWING IS NOT TO SCALE

ATG DESIGNED
ATG DRAWN
PVM CHECKED

STRUCTURAL REGISTERED PROFESSIONAL ENGINEER 64239PE OREGON JANUARY 14, 2003 ALLAN T GOFFE
EXPIRES 6/30/2023

ACE ENGINEERING LLC
professional structural engineering

WEST YOST
Water. Engineered.

Sweet Home Oregon at its best!

MAHLER WATER RECLAMATION FACILITY IMPROVEMENTS PROJECT PHASE 1

SPECIAL INSPECTIONS AND STRUCTURAL NOTES

PROJECT NO.: 936-50-21-09 | SCALE: NONE | DATE: August 2022

SHEET
S-002
45 of 135

DocuSign Envelope ID: 09934EE9-0C55-40A3-8631-9C0AF6797111

STRUCTURAL MATERIAL NOTES

CONCRETE: ALL CONCRETE TANKS, BASINS, AND CONTAINMENT STRUCTURES ARE WATER–BEARING. WATER–BEARING CONCRETE STRUCTURES, INCLUDING REINFORCING, SHALL COMPLY WITH ACI 350–20, CODE REQUIREMENTS FOR ENVIRONMENTAL ENGINEERING CONCRETE STRUCTURES AS WELL AS ACI 318 AND ACI 301 CURRENT EDITIONS. ALL OTHER CONCRETE CONSTRUCTION, INCLUDING REINFORCING, SHALL COMPLY WITH ACI 318 AND ACI 301 CURRENT EDITIONS.

CONCRETE SHALL BE READY MIXED IN ACCORDANCE WITH ASTM C94.

CONCRETE STRENGTHS SHALL BE VERIFIED BY STANDARD 28–DAY CYLINDER TESTS PER ASTM C39, AND SHALL BE AS FOLLOWS:

f'c	MAX W/C	MIN CEMENT	SLUMP	USE
3000 PSI	0.48	560 LBS	5"+/–1"	ALL USES, U.N.O.
4000 PSI	0.40	590 LBS	4"+/–1"	WATER BEARING STRUCTURES (WITH CRYSTALLINE WATERPROOFING ADMIXTURE)

CEMENT SHALL BE IN ACCORDANCE WITH THE STANDARD SPECIFICATION FOR PORTLAND CEMENT AND CONFORM TO ASTM C150, TYPE II.
FLY ASH CONFORMING TO ASTM C618, TYPE F OR TYPE C, SHALL BE USED TO REPLACE AT LEAST 10% AND UP TO 50% OF THE CEMENT CONTENT, PROVIDED THAT THE MIX STRENGTH IS SUBSTANTIATED BY TEST DATA.
COARSE AGGREGATE SHALL CONFORM TO ASTM C33 WITH A MAXIMUM SIZE OF 3/4".
FINE AGGREGATE SHALL BE CLEAN, DURABLE, NATURAL SAND CONFORMING TO ASTM C33.

A WATER–REDUCING ADMIXTURE CONFORMING TO ASTM C494, USED IN STRICT ACCORDANCE WITH THE MANUFACTURER'S RECOMMENDATIONS, SHALL BE INCORPORATED IN CONCRETE DESIGN MIXES. A HIGH–RANGE WATER–REDUCING ADMIXTURE CONFORMING TO ASTM C494, TYPE F OR G, MAY BE USED IN CONCRETE MIXES, PROVIDING THAT THE SLUMP DOES NOT EXCEED 8".
SLUMP AT POINT OF TRUCK DISCHARGE SHALL NOT EXCEED THAT INDICATED ABOVE. SUPERPLASTICIZED CONCRETE SLUMP SHALL NOT EXCEED 7" ±1".

AN AIR ENTRAINING ADMIXTURE CONFORMING TO THE LATEST REVISION OF ASTM C260 SHALL BE ADDED TO CONCRETE TO PROVIDE 4% ±1.5% ENTRAINED AIR FOR SLABS, WALKS AND CURBS EXPOSED TO WEATHER.

LOCATION OF ALL CONSTRUCTION, CONTRACTION, AND EXPANSION JOINTS SHALL BE AS SHOWN ON THE DRAWINGS OR APPROVED BY THE ENGINEER. PLACE CONSTRUCTION JOINTS IN SLABS AND BEAMS AT THE SAME TIME AND LOCATION. CONSTRUCTION JOINTS SHALL BE THOROUGHLY CLEANED AND INTENTIONALLY ROUGHENED FOR BOND. PROVIDE WATER STOPS IN ALL CONSTRUCTION JOINTS IN WATER BEARING SLABS AND WALLS.

EMBEDDED ITEMS SHALL BE FIRMLY HELD INTO POSITION IN THE FORMWORK OR MASONRY AND SHALL NOT BE "WET STABBED" INTO FRESHLY PLACED CONCRETE OR GROUT.

EXPANSION JOINTS SHALL HAVE EDGES ROUNDED TO 1/4" RADIUS, USE 1/2" CORK OR CANE–FIBER FORM BOARD, EXCAVATED TO 1/2" DEPTH AND FILLED WITH AN APPROVED POLY–SULFIDE CAULK.

DO NOT PLACE ANY CONCRETE WHOSE TEMPERATURE IS ABOVE 90°F.

DO NOT PLACE ANY CONCRETE THAT IS MORE THAN 90 MINUTES OLD, SINCE BATCH TIME.

UNLESS SELF–CONSOLIDATING CONCRETE IS APPROVED AS SUCH, ALL CONCRETE SHALL BE CONSOLIDATED DURING PLACEMENT. CONSOLIDATION SHALL BE BY INTERNAL VIBRATION, USING A GASOLINE–POWERED OR PLUG–IN VIBRATOR. INSERT VIBRATOR VERTICALLY INTO THE CONCRETE AT A SPACING NOT EXCEEDING 1.5 TIMES THE RADIUS OF INFLUENCE. DO NOT USE VIBRATOR TO MOVE CONCRETE. EXCEPTIONS TO THE ABOVE MAY BE MADE AS FOLLOWS:
A) SLABS ON GRADE LESS THAN 8" THICK, MAY BE CONSOLIDATED BY TAMPING WITH A COMMERCIAL TAMPER ONLY IF THE CONCRETE SLUMP IS 3" OR LESS.
B) CURBS 6" OR LESS IN WIDTH AND 12" OR LESS IN HEIGHT MAY BE CONSOLIDATED BY BATTERY–POWERED VIBRATOR OR BY MANUAL RODDING.

HYDRAULIC TESTING OF CONCRETE WATER–RETAINING STRUCTURES (INCLUDING CHEMICAL CONTAINMENT STRUCTURES), SHALL BE PER ACI 350.1–10, WITH A MAXIMUM LOSS OF 0.0125%/ DAY AS THE QUANTITATIVE CRITERION. THE ENGINEER SHALL WITNESS ALL QUANTITATIVE AND QUALITATIVE TESTING AND APPROVE THE WATERTIGHTNESS OF THE TANK PRIOR TO BACKFILL

SLEEVES, OPENINGS, CONDUIT, AND OTHER EMBEDDED ITEMS NOT SHOWN ON THE STRUCTURAL DRAWINGS SHALL BE APPROVED BY THE STRUCTURAL ENGINEER BEFORE POURING. NO SLEEVE, OPENING, OR INSERT MAY BE PLACED IN BEAMS, JOISTS, OR COLUMNS UNLESS APPROVED BY THE ENGINEER. CONDUITS EMBEDDED IN SLABS SHALL NOT BE LARGER IN OUTSIDE DIMENSION THAN ONE THIRD OF THE THICKNESS OF THE SLAB AND SHALL NOT BE SPACED CLOSER THAN THREE DIAMETERS ON CENTER.

PROVIDE 3/4" CHAMFERS ON ALL EXPOSED CONCRETE EDGES, UNLESS NOTED OTHERWISE. WHERE INDICATED OR REQUIRED, SLOPE CONCRETE SLABS TO DRAINS SHOWN ON PLUMBING AND/OR ARCHITECTURAL DRAWINGS.

ALL CONCRETE SHALL BE CURED IMMEDIATELY AFTER FINISHING OPERATIONS, FOR A PERIOD OF AT LEAST 7 CONSECUTIVE CALENDAR DAYS.

WEATHER RESISTANCE: ALL CONCRETE EXPOSED TO CHLORIDES SHALL CONTAIN A CALCIUM–NITRITE BASED CORROSION–INHIBITING ADMIXTURE. THE DOSAGE FOR CONCRETE EXPOSED TO AIRBORNE CHLORIDES SHALL BE MINIMUM TWO GALLONS PER CUBIC YARD. THE WATER CONTAINED IN THE CORROSION–INHIBITING ADMIXTURE SHALL BE USED IN THE CALCULATION OF THE WATER–TO–CEMENTITIOUS RATIO OF THE CONCRETE. PROVIDE RHEOCRETE CNI BY MASTER BUILDERS OR APPROVED EQUIVALENT.

SHORING AND RESHORING: SHORING AND RESHORING SHALL CONFORM TO ACI 347–01. SHORING AND SUPPORTING FORMWORK SHALL NOT BE REMOVED FROM HORIZONTAL MEMBERS BEFORE CONCRETE STRENGTH IS AT LEAST 70 PERCENT OF DESIGN STRENGTH, AS DETERMINED BY FIELD CURE CYLINDERS. IN ADDITION, SHORING SHALL NOT BE REMOVED SOONER THAN RECOMMENDED BY ACI 347–01 , SECTION 3.7.2.3. FORMWORK SHALL NOT BE REMOVED IN LESS THAN TEN (10) DAYS.

REINFORCING STEEL: #4 AND LARGER REINFORCING STEEL FOR COLUMNS, WALLS, BEAMS & ELEVATED SLAB SHALL BE GRADE 60, DEFORMED BARS CONFORMING TO A706. ALL OTHER BARS MAY BE GRADE 60 DEFORMED BARS CONFORMING TO ASTM A706 OR A615.
REINFORCING STEEL TO BE WELDED OR FIELD BENT SHALL CONFORM TO ASTM A706.
WELDED WIRE FABRIC SHALL CONFORM TO ASTM A185, UNLESS OTHERWISE NOTED.
REINFORCING STEEL SHALL BE SECURELY TIED IN PLACE WITH #16 ANNEALED IRON WIRE.

ALL DETAILING AND ACCESSORIES SHALL CONFORM TO ACI DETAILING MANUAL SP–66. PROVIDE CHAIRS, SPACERS, BOLSTERS, AND ITEMS IN CONTACT WITH FORMS WITH HOT–DIP GALVANIZED LEGS OR PLASTIC LEGS. ACCURATELY POSITION, SUPPORT, AND SECURE REINFORCEMENT AGAINST DISPLACEMENT BY FORMWORK CONSTRUCTION OR CONCRETE PLACEMENT OPERATIONS. "WET–STICKING" OF REINFORCING IS PROHIBITED.

REQUIRED CONCRETE COVER FOR REINFORCING STEEL (UNLESS NOTED OTHERWISE):

WATER RETAINING STRUCTURES:

CONCRETE PLACED AGAINST EARTH	3"
PRE–CAST CONCRETE	1½"
OTHER FORMED OR FINISHED SURFACES	2"

OTHER CONCRETE

FOOTINGS	3" BOTTOM, 2" TOP & SIDES
SLABS	3/4" MINIMUM
COLUMNS	1½" TO TIES, 2" TO PRINCIPLE REINFORCEMENT
BEAMS	1½" TO STIRRUPS, 2" TO PRINCIPLE REINFORCEMENT
WALLS	1½" TO DRY CONDITIONS, 2" TO EARTH, WATER OR WEATHER

LAP SPLICE CONTINUOUS VERTICAL OR HORIZONTAL BARS IN CONCRETE MEMBERS IN ACCORDANCE WITH ACI 318–19, FOR CLASS "B" TENSION LAP SPLICES. DO NOT SPLICE CONTINUOUS TOP BARS IN BEAMS AT ENDS OF CLEAR SPANS. DO NOT SPLICE CONTINUOUS BOTTOM BARS IN BEAMS IN CLEAR SPANS BETWEEN SUPPORTS. AT CYLINDRICAL WALLS, HOOP REINFORCEMENT SPLICES SHALL BE STAGGERED BY NOT LESS THAN ONE LAP LENGTH OR 3 FEET, AND SHALL NOT COINCIDE IN VERTICAL ARRAYS MORE FREQUENTLY THAN EVERY THIRD BAR. SHOW ALL SPLICES ON SHOP DRAWINGS. SPLICE LOCATIONS AND METHODS SUBJECT TO APPROVAL OF STRUCTURAL ENGINEER.

AT SLAB AND WALL OPENINGS PROVIDE A MINIMUM OF (2) #5 BARS ALL FOUR SIDES AND DIAGONALLY; EXTEND THESE BARS A LAP DISTANCE OR A MINIMUM OF 27" PAST THE OPENING OR HOOK BARS IF DISCONTINUOUS.

DOWEL ALL WALLS AND COLUMNS TO FOOTINGS WITH HOOKED BAR SIZE AND SPACING TO MATCH VERTICAL REINFORCING UNLESS OTHERWISE SHOWN.

CONCRETE ACCESSORIES: HEADED SHEAR STUDS SHALL BE NELSON HEADED ANCHORS WITH FLUXED ENDS OR APPROVED EQUAL. DEFORMED BAR ANCHORS (DBA) SHALL BE NELSON, TYPE D2L, OR APPROVED. STUDS AND DBA SHALL BE AUTOMATICALLY END WELDED WITH THE MANUFACTURER'S STANDARD EQUIPMENT IN ACCORDANCE WITH THEIR RECOMMENDATIONS. HAND WELDING NOT PERMITTED.

PERMANENTLY EXPOSED EMBEDDED PLATES AND ANGLES SHALL BE HOT–DIPPED GALVANIZED AFTER FABRICATION, OR STAINLESS STEEL. ACCURATELY POSITION, SUPPORT, AND SECURE EMBEDDED ITEMS AGAINST DISPLACEMENT BY FORMWORK CONSTRUCTION OR CONCRETE PLACEMENT OPERATIONS. SECURELY ATTACH EMBEDDED ITEMS TO FORMWORK PRIOR TO START OF CONCRETE PLACEMENT. "WET–STICKING" OF EMBEDDED ITEMS IS PROHIBITED. NO LOADS OR WELDS SHALL BE PLACED ON EMBEDDED PLATES OR ANGLES FOR A MINIMUM OF 7 DAYS AFTER CASTING.

WHERE NEW CONCRETE IS PLACED AGAINST EXISTING CONCRETE, THE EXISTING CONCRETE SURFACE SHOULD BE CLEANED AND ROUGHENED TO A MINIMUM ¼" AMPLITUDE.

MECHANICAL ANCHORS: MECHANICAL ANCHORS SHALL HAVE A CURRENT ICC–ES EVALUATION REPORT INDICATING CONFORMANCE WITH CURRENT APPLICABLE ICC–ES ACCEPTANCE CRITERIA (AC193 FOR EXPANSION AND SCREW ANCHOR INSTALLATION IN CONCRETE, AC01 FOR EXPANSION ANCHOR INSTALLATION IN MASONRY OR AC106 FOR SCREW ANCHOR INSTALLATION IN MASONRY). MECHANICAL ANCHORS SHALL BE EXPANSION TYPE OR SCREW TYPE AS NOTED ON THE DRAWINGS. PROVIDE SPECIAL INSPECTION AS MANDATED BY THE APPLICABLE BUILDING CODE AND BUILDING OFFICIAL HAVING JURISDICTION.

EXPANSION STYLE ANCHORS SHALL BE TORQUE–CONTROLLED, WITH IMPACT SECTION TO PREVENT THREAD DAMAGE COMPLETE WITH REQUIRED NUTS AND WASHERS. PROVIDE ANCHORS WITH LENGTH IDENTIFICATION MARKINGS. TYPE AND SIZE AS INDICATED ON DRAWINGS. ACCEPTABLE ANCHORS IN "CRACKED" AND "UN–CRACKED" CONCRETE ARE SIMPSON STRONG–BOLT 2 (ICC–ES ESR–3037), HILTI KWIK–BOLT 3 (ICC–ES ESR–2302) OR POWERS POWER–STUD+ SD2 (ICC–ES ESR–2502); IN SOLID–GROUTED MASONRY ARE SIMPSON STRONG–BOLT 2 (ICC–ES ESR–3037), HILTI KWIK BOLT–TZ (ICC–ES ESR–1917) OR POWERS POWER STUD+ SD1 (ICC–ES ESR–2818).
SCREW STYLE ANCHORS SHALL BE ONE PIECE CARBON STEEL SCREW ANCHOR WITH FINISHED HEX HEAD WITH INTEGRAL WASHER, DOUBLE LEAD THREAD, CHAMFERED TIP, RATCHET TEETH ON UNDERSIDE OF HEAD. PROVIDE ANCHORS HEAD STAMPED WITH LENGTH. TYPE AND SIZE AS INDICATED ON DRAWINGS. ACCEPTABLE ANCHORS IN "CRACKED" AND "UN–CRACKED" CONCRETE ARE SIMPSON TITEN HD (ICC–ES ESR–2713), HILTI KWIK HUS–EZ (ICC–ES ESR–3027) OR POWERS WEDGE BOLT+ (ICC–ES ESR–2526). ; IN SOLID–GROUTED MASONRY ARE SIMPSON TITEN HD (ICC–ES ESR–1056), HILTI KWIK HUS–EZ (ICC–ES ESR–3056) OR POWERS WEDGE BOLT+ (ICC–ES ESR–1678).

UNLESS OTHERWISE NOTED, PROVIDE CARBON STEEL ANCHORS, ZINC PLATED IN ACCORDANCE WITH ASTM B633 OR MECHANICALLY GALVANIZED ACCORDING TO ASTM A153. PERMANENTLY EXPOSED ANCHORS AND ANCHORS USED IN WATER BEARING STRUCTURES SHALL BE 316 STAINLESS STEEL.

IDENTIFY POSITION OF REINFORCING STEEL AND OTHER EMBEDDED ITEMS PRIOR TO DRILLING HOLES FOR ANCHORS. EXERCISE CARE IN CORING OR DRILLING TO AVOID DAMAGING EXISTING REINFORCING OR EMBEDDED ITEMS. NOTIFY THE ENGINEER IF REINFORCING STEEL OR OTHER EMBEDDED ITEMS ARE ENCOUNTERED DURING DRILLING.

ADHESIVE ANCHORS: ADHESIVE ANCHORS SHALL HAVE A CURRENT ICC–ES EVALUATION REPORT INDICATING CONFORMANCE WITH CURRENT APPLICABLE ICC–ES ACCEPTANCE CRITERIA (AC308 FOR INSTALLATION IN CONCRETE OR AC58 FOR INSTALLATION IN MASONRY). ADHESIVE SHALL BE INSTALLED IN DRY HOLES AND HAVE PERFORMANCE DATA FOR INSTALLATIONS IN WATER–SATURATED HOLES. CONTRACTOR SHALL NOTIFY THE ENGINEER–OF–RECORD PRIOR TO INSTALLING ADHESIVE ANCHORS IN WATER–SATURATED (DAMP) HOLES. ADHESIVE SHALL BE FULLY–CURED AT 70°F WITHIN 24 HOURS FROM THE TIME OF INSTALLATION. U.N.O. CONCRETE SHALL BE A MINIMUM OF 21 DAYS OLD AT THE TIME OF INSTALLATION PER ACI 318–14 CHAPTER 17.

ACCEPTABLE FAST CURE ADHESIVE IN "CRACKED" AND "UN–CRACKED" CONCRETE ARE SIMPSON AT–XP (IAPMO UES ER–263), HILTI HIT–HY 200 (ICC–ES ESR–3187) OR POWERS AC100+ GOLD (ICC–ES ESR–2582); IN SOLID–GROUTED MASONRY ARE SIMPSON AT–XP (IAPMO UES ER–281) OR HILTI HIT–HY 270 (ICC–ES ESR–4143. DESIGN OF THESE ADHESIVES IS BASED ON CONCRETE TEMPERATURE RANGE "A" OR "1".

ACCEPTABLE SLOW CURE ADHESIVE IN "CRACKED" AND "UNCRACKED" CONCRETE ARE SIMPSON SET–XP (ICC–ES ESR–2508), HILTI HIT–RE 500–SD (ICC–ES ESR–2322) OR POWERS PE1000+ (ICC–ES ESR–2583); IN SOLID–GROUTED MASONRY ARE SIMPSON SET–XP (IAPMO UES ER–265). DESIGN OF THESE ADHESIVES IS BASED ON CONCRETE TEMPERATURE RANGE "A" OR "1".

THREADED STUDS SHALL CONFORM TO ASTM A36, UNLESS NOTED OTHERWISE. PERMANENTLY EXPOSED THREADED STUDS AND THREADED STUDS USED IN WATER BEARING STRUCTURES SHALL BE 316 STAINLESS STEEL. NUTS AND WASHERS SHALL CONFORM TO SAME SPECIFICATION AS THE SUPPLIED ANCHOR RODS.

INSTALLATION SHALL BE IN CONFORMANCE WITH MANUFACTURER'S PRINTED INSTALLATION INSTRUCTIONS (MPII). INSTALLATION SHALL ALSO INCLUDE BRUSHING AND CLEANING OF DRILLED HOLES WITH COMPRESSED AIR AS REQUIRED BY THE APPLICABLE EVALUATION REPORT. INSTALLERS SHALL BE TRAINED BY THE MANUFACTURER'S REPRESENTATIVE. EMBEDMENT SHALL BE AS INDICATED ON THE STRUCTURAL DRAWINGS.

IDENTIFY POSITION OF REINFORCING STEEL AND OTHER EMBEDDED ITEMS PRIOR TO DRILLING HOLES FOR ANCHORS. EXERCISE CARE IN CORING OR DRILLING TO AVOID DAMAGING EXISTING REINFORCING OR EMBEDDED ITEMS. NOTIFY THE ENGINEER IF REINFORCING STEEL OR OTHER EMBEDDED ITEMS ARE ENCOUNTERED DURING DRILLING.

NO.	DATE	BY	REVISION
△			
△			
△			
△			
△			
△			
△			

NOTICE
0 ½ 1
IF THIS BAR DOES NOT MEASURE 1" THEN DRAWING IS NOT TO SCALE

ATG
DESIGNED
ATG
DRAWN
PVM
CHECKED

STRUCTURAL REGISTERED PROFESSIONAL ENGINEER 64230PE OREGON JANUARY 14, 2003 ALLAN T GOFFE
EXPIRES 6/30/2023

ACE ENGINEERING LLC
professional structural engineering

WEST YOST
Water. Engineered.

Sweet Home Oregon at its best!

MAHLER WATER RECLAMATION FACILITY IMPROVEMENTS PROJECT PHASE 1

MATERIAL NOTES

PROJECT NO.: 936-50-21-09 | SCALE: NONE | DATE: August 2022

SHEET
S-003

DocuSign Envelope ID: 09934EE9-0C55-40A3-8631-9C0AF6797111

STRUCTURAL MATERIAL NOTES (Continued)

STRUCTURAL STEEL: STRUCTURAL STEEL AND MISCELLANEOUS IRON SHALL BE CONSTRUCTED IN ACCORDANCE WITH AISC CODE OF STANDARD PRACTICE AND SPECIFICATION FOR THE DESIGN, FABRICATION AND ERECTION OF STRUCTURAL STEEL FOR BUILDINGS – CURRENT EDITIONS.

WIDE FLANGE & TEE SHAPES SHALL CONFORM TO ASTM A992, GRADE 50.
CHANNELS AND ANGLES SHALL CONFORM TO ASTM A36.
PLATES SHALL CONFORM TO ASTM A36 OR A572.
RECTANGULAR AND SQUARE TUBES SHALL CONFORM TO ASTM A500, GRADE B.
ROUND HSS SHALL CONFORM TO ASTM A500, GRADE B.
PIPES SHALL CONFORM TO ASTM A53, GRADE B.

WELDING SHALL CONFORM TO THE AWS CODES FOR ARC AND GAS WELDING IN BUILDING CONSTRUCTION. WELDS SHALL BE MADE USING E70XX ELECTRODES AND SHALL BE 3/16" MINIMUM UNLESS OTHERWISE NOTED. WELDING SHALL BE PERFORMED BY AWS CERTIFIED WELDERS. PREQUALIFIED WELDING PROCEDURES ARE TO BE USED, UNLESS AWS QUALIFICATION IS SUBMITTED TO THE ENGINEER PRIOR TO FABRICATION.

HIGH STRENGTH BOLTS SHALL BE HEAVY HEX STRUCTURAL BOLTS PER ANSI B18.2.1 AND HSALL CONFORM TO THE REQUIREMENTS OF ASTM A325–X. BOLTS SHALL BE TYPE 1, 2 OR 3 AND SHALL BE USED IN A BEARING TYPE CONNECTION WITH THREADS EXCLUDED FROM THE SHEAR PLANE (X). NUTS SHALL BE HEAVY HEX ASTM A563–C. WASHERS SHALL BE FLAT CIRCULAR, RECTANGULAR OR SQUARE AND SHALL CONFORM TO ASTM F436, TYPE 1. PROVIDE BEVELED WASHERS AS NECESSARY. FINISH SHALL MATCH NUT. WASHERS SHALL BE INSTALLED UNDER THE ELEMENT BEING TURNED. WASHERS OVER OVERSIZED OR SLOTTED HOLES SHALL COMPLY WITH RCSC SPECIFICATIONS.
BOLTS PERMANENTLY EXPOSED TO WEATHER SHALL BE HOT DIPPED GALVANIZED.

EXCEPT WHERE GALVANIZING IS INDICATED ON THE DRAWINGS, STRUCTURAL STEEL TO RECEIVE ONE SHOP PRIME COAT EXCEPT ON SURFACES RECEIVING FIELD WELDS, EMBEDDED IN CONCRETE OR AT SLIP CRITICAL HIGH STRENGTH BOLTED SURFACES, WHICH SHALL BE TOUCHED UP AFTER CONNECTION IS COMPLETE. STRUCTURAL STEEL EXPOSED TO VIEW OR WEATHER SHALL RECEIVE TWO COATS OF OF APPROVED SEMI–GLOSS ALKYD ENAMEL COMPATIBLE WITH PRIMER.

SHEAR STUD CONNECTORS: SHEAR STUD CONNECTORS SHALL BE FABRICATED AND INSTALLED IN ACCORDANCE WITH AWS D1.1 "STRUCTURAL WELDING CODE", SECTION 7 _ STUD WELDING. STUDS SHALL BE TYPE 'B', HEADED STUDS HAVING A MINIMUM TENSILE STRENGTH OF 60,000 PSI AND SHALL BE OF LENGTH AND DIAMETER SHOWN ON STRUCTURAL DRAWINGS.

MACHINE BOLTS: UNLESS INDICATED OTHERWISE ON THE DRAWINGS, MACHINE BOLTS SHALL BE ASTM A36, A307 GRADE A OR F1554 GRADE 36. NUTS SHALL BE ASTM A563–A HEX WITH FINISH TO MATCH FASTENER.

ANCHOR RODS & THREADED RODS: UNLESS INDICATED OTHERWISE ON THE DRAWINGS, ANCHOR RODS SHALL BE ASTM F1554, GRADE 36 WITH A HEAVY HEX NUT AT THE EMBEDDED END.

STAINLESS STEEL: STAINLESS STEEL SHALL BE CONSTRUCTED IN ACCORDANCE WITH AISC 370 STANDARD SPECIFICATION FOR STAINLESS STEEL BUILDINGS – CURRENT EDITION.

SS WIDE FLANGE, I–BEAM, ANGLE, TEE & CHANNEL SHAPES SHALL CONFORM TO ASTM A479, Fy=30 KSI
SS PLATE SHALL CONFORM TO ASTM A240, Fy=30 KSI.
SS RECTANGULAR & SQUARE TUBES SHALL CONFORM TO ASTM A554, Fy=30KSI
SS PIPES SHALL CONFORM TO ASTM A312, Fy=30 KSI.

STRUCTURAL ALUMINUM: STRUCTURAL ALUMINUM SHALL BE CONSTRUCTED IN ACCORDANCE WITH THE CURRENT GOVERNING EDITION OF THE OREGON STRUCTURAL SPECIALTY CODE. ALL STRUCTURAL ALUMINUM SHALL BE 6061–T6 ALLOY, Fy=36 KSI. STRUCTURAL ALUMINUM PLATES SHALL CONFORM TO ASTM B209. STRUCTURAL ALUMINUM I–BEAMS, CHANNELS AND ANGLES SHALL CONFORM TO ASTM B308. STRUCTURAL ALUMINUM TUBES SHALL CONFORM TO ASTM B221. ALL ALUMINUM IN CONTACT WITH CEMENT GROUT, CONCRETE OR DISSIMILAR MATERIALS SHALL HAVE A PROTECTIVE COATING.

SAWN LUMBER: SAWN LUMBER SHALL CONFORM TO WEST COAST LUMBER INSPECTION BUREAU STANDARD GRADING AND DRESSING RULE NO. 17 AS AMENDED TO DATE. STRUCTURAL SAWN LUMBER SHALL BE COAST REGION DOUGLAS FIR WITH THE ALLOWABLE FIBER STRESSES PER THE AWC NATIONAL DESIGN SPECIFICATION.

UNLESS NOTED OTHERWISE:
2x, 3x & 4x PLATES, JOISTS, BEAMS, HEADERS, STUDS & BLOCKING: No. 2.
6x & LARGER BEAMS, POSTS & COLUMNS: No. 1.

ALL FRAMING LUMBER LARGER THAN 6" IN THE LEAST DIMENSION SHALL BE FOHC.

ALL FRAMING LUMBER SHALL HAVE A MOISTURE CONTENT LESS THAN 19% AT THE TIME OF FRAMING AND LESS THAN 16% AT THE TIME OF CLOSING FRAMING.

ALL LUMBER IN CONTACT WITH CONCRETE OR MASONRY SHALL BE PROTECTED OR PRESSURE PRESERVATIVE TREATED IN ACCORDANCE WITH AITC–109.
ALL FRAMING NAILS SHALL BE COMMON NAILS AND SHALL BE OF THE SIZE AND NUMBER INDICATED ON THE DRAWINGS. NAILING NOT SHOWN SHALL BE AS INDICATED IN TABLE 2304.10.1 OF THE IBC.
BOLTS AND LAG SCREWS SHALL CONFORM TO ANSI/ASME STANDARD B18.1. ALL BOLTS AND LAG SCREWS SHALL BE INSTALLED WITH STANDARD CUT WASHERS.

SHEATHING: SHEATHING PANELS SHALL CONFORM TO THE REQUIREMENTS OF U.S. PRODUCT STANDARD PS–1 FOR CONSTRUCTION AND INDUSTRIAL PLYWOOD OR APA PRP–108 PERFORMANCE STANDARDS. EACH PANEL SHALL BE STAMPED WITH THE PS AND/OR APA GRADE MARK. ALL SHEATHING SHALL BE RATED EXPOSURE 1.

SHEATHING INSTALLATION SHALL BE IN CONFORMANCE WITH APA RECOMMENDATIONS. FOR ROOF AND WALL SHEATHING ALLOW 1/8" SPACING AT PANEL EDGES, UNLESS OTHERWISE RECOMMENDED BY THE PANEL MANUFACTURER.

ALL FLOOR, ROOF, AND WALL SHEATHING SHALL BE INSTALLED WITH FACE GRAIN PERPENDICULAR TO SUPPORTS, EXCEPT AS INDICATED ON THE DRAWINGS. STAGGER ENDS OF ADJACENT PANELS 4'–0".

ROOF SHEATHING SHALL BE BLOCKED, TONGUE–AND–GROOVE, OR HAVE EDGES SUPPORTED BY PLYWOOD CLIPS, CDX, SPAN RATING 40/20 (5/8" NOMINAL). ATTACH PANELS TO SUPPORTING MEMBERS WITH 10d NAILS SPACED 4" ON CENTER ALONG THE PANEL EDGES AND AT 12" ON CENTER ALONG INTERMEDIATE SUPPORTS, UNLESS NOTED OTHERWISE.

WALL SHEATHING SHALL BE CDX, SPAN RATING 32/16 (1/2" NOMINAL), BLOCK WITH 2x FRAMING AT ALL PANEL EDGES WHERE NOTED. ATTACH PANELS TO SUPPORTING MEMBERS WITH 8d NAILS SPACED 4" ON CENTER ALONG THE PANEL EDGES AND AT 12" ON CENTER ALONG INTERMEDIATE SUPPORTS, UNLESS NOTED OTHERWISE ON DRAWINGS.

ATTACH PLYWOOD PANELS TO SUPPORTING MEMBERS WITH 8d NAILS SPACED 6" ON CENTER ALONG THE PANEL EDGES AND AT 12" ON CENTER ALONG INTERMEDIATE SUPPORTS.

MANUFACTURED WOOD JOISTS: MANUFACTURED WOOD JOISTS SHALL BE OF THE SIZE AND TYPE SHOWN ON THE DRAWINGS, MANUFACTURED BY WEYERHAEUSER, REDBUILT, BOISE CASCADE, OR AN APPROVED EQUAL. PROVIDE BRIDGING IN CONFORMANCE WITH THE MANUFACTURER'S RECOMMENDATIONS. JOISTS AND BRIDGING SHALL BE CAPABLE OF RESISTING THE WIND UPLIFT NOTED ON THE DRAWINGS. THE JOIST MANUFACTURER SHALL VISIT THE JOB SITE AS REQUIRED TO VERIFY THE PROPER INSTALLATION OF JOISTS IN WRITING TO THE ENGINEER. ALTERNATES WILL BE CONSIDERED, PROVIDED THE ALTERNATE IS COMPATIBLE WITH THE LOAD CAPACITY, DIMENSIONAL, AND FIRE RATING REQUIREMENTS OF THE PROJECT AND HAS LVL FLANGES.

MANUFACTURED WOOD STRUCTURAL COMPONENTS: MEMBERS DESIGNATED LVL SHALL BE LAMINATED VENEER LUMBER AS MANUFACTURED BY WEYERHAEUSER (MICROLLAM), REDBUILT (REDLAM), BOISE CASCADE (VERSA LAM) OR ENGINEER APPROVED SUBSTITUTION WITH Fb = 2600 PSI, E = 1,900,000 PSI, Fv = 285 PSI, Fc (PARALLEL) = 2510 PSI, Fc (PERPENDICULAR) = 750 PSI.

WOOD FRAMING CONNECTORS: FRAMING ACCESSORIES AND STRUCTURAL FASTENERS SHALL BE MANUFACTURED BY SIMPSON STRONG TIE COMPANY (OR APPROVED EQUAL) AND OF THE SIZE AND TYPE SHOWN ON THE DRAWINGS. HANGERS NOT SHOWN SHALL BE SIMPSON HU OF SIZE TO FIT MEMBER. ALL CONNECTORS SHALL BE GALVANIZED. UNLESS SHOWN OTHERWISE, INSTALL MAXIMUM SIZE AND NUMBER OF FASTENERS SHOWN IN LATEST SIMPSON STRONG TIE CATALOG.

NO.	DATE	BY	REVISION

NOTICE
0 ½ 1
IF THIS BAR DOES NOT MEASURE 1" THEN DRAWING IS NOT TO SCALE

ATG DESIGNED
ATG DRAWN
PVM CHECKED

STRUCTURAL REGISTERED PROFESSIONAL ENGINEER 64239PE OREGON JANUARY 14, 2003 ALLAN T GOFFE
EXPIRES 6/30/2023

ACE ENGINEERING LLC
professional structural engineering

WEST YOST
Water. Engineered.

Sweet Home Oregon at its best!

MAHLER WATER RECLAMATION FACILITY IMPROVEMENTS PROJECT PHASE 1

MATERIAL NOTES CONTINUED

PROJECT NO.: 936-50-21-09 | SCALE: NONE | DATE: August 2022

SHEET
S-004
47 of 135

DocuSign Envelope ID: 09934EE9-0C55-40A3-8631-9C0AF6797111

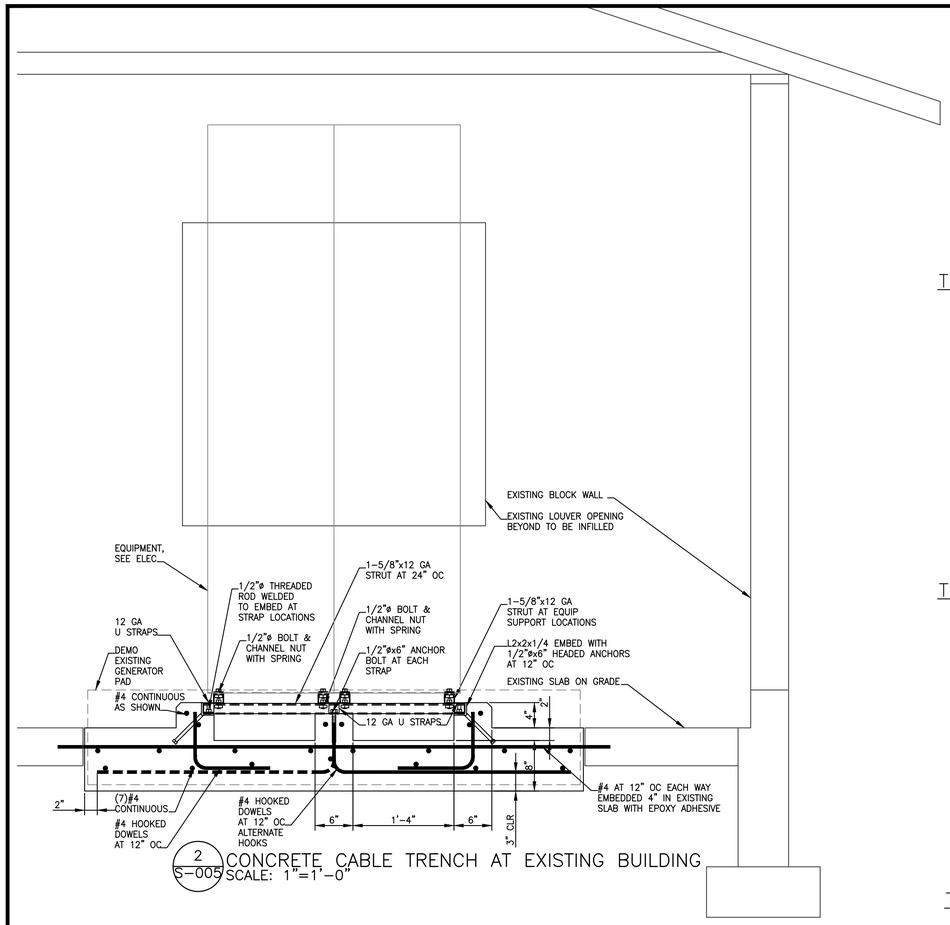

2 S-005 CONCRETE CABLE TRENCH AT EXISTING BUILDING
SCALE: 1"=1'-0"

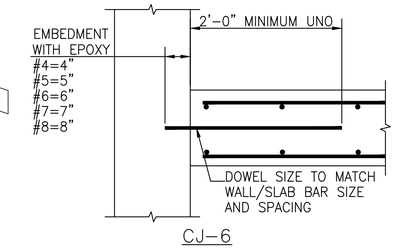

TYPICAL DOWELED CONSTRUCTION JOINTS

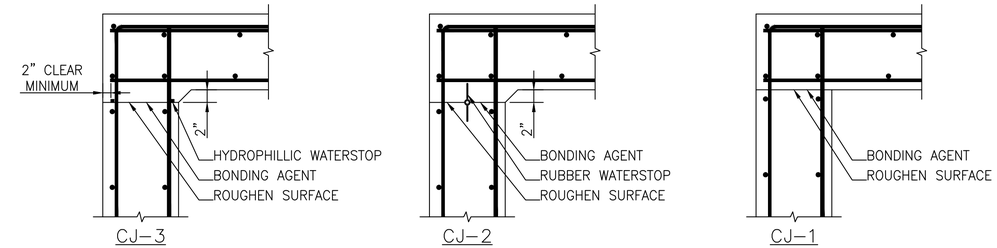

TYPICAL WALL TO SLAB HORIZONTAL CONSTRUCTION JOINTS

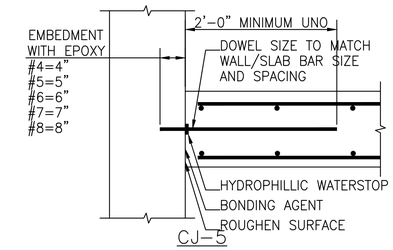

TYPICAL DOWELED CONSTRUCTION JOINTS

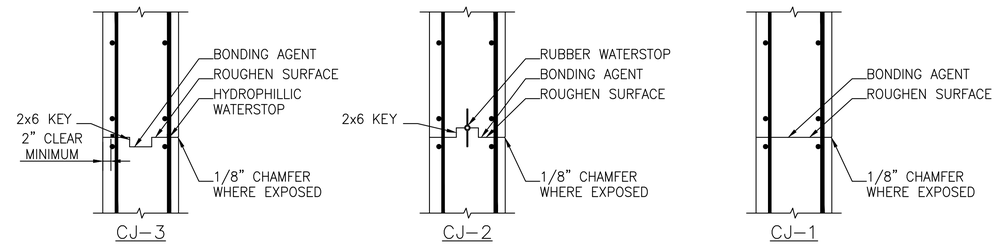

TYPICAL WALL TO WALL HORIZONTAL CONSTRUCTION JOINTS

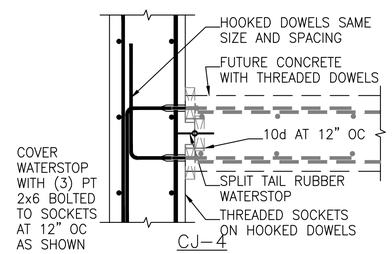

TYPICAL FUTURE CONSTRUCTION JOINTS

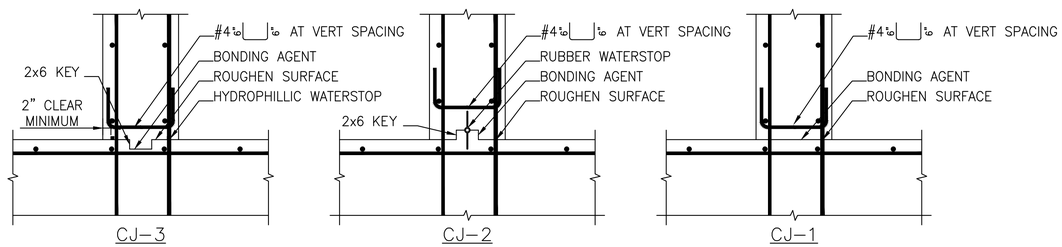

TYPICAL SLAB TO WALL HORIZONTAL CONSTRUCTION JOINTS

1 S-005 TYPICAL CONSTRUCTION JOINTS
SCALE: NONE

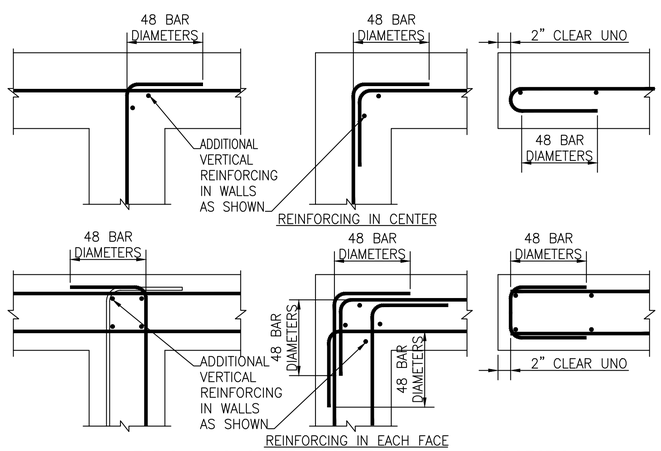

TYPICAL CONCRETE FOOTING & WALL INTERSECTION

6 S-005 TYPICAL REINFORCING INTERSECTIONS
SCALE: NONE

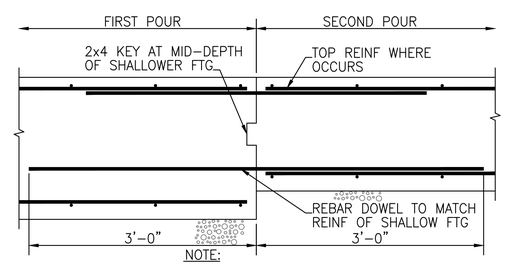

NOTE:
USE OF FOOTING CONSTRUCTION JOINT IS AT CONTRACTOR'S OPTION

CONSTRUCTION JOINT AT FOOTING

5 S-005 TYPICAL FOOTING JOINT
SCALE: NONE

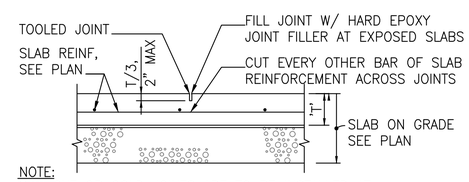

NOTE:
SAW CUT OR COLD JOINTS ARE TO BE INSTALLED AT 10' TO 15' ON CENTER, EACH WAY OR AS SHOWN ON PLANS.

TYPICAL SLAB JOINT SJ-2

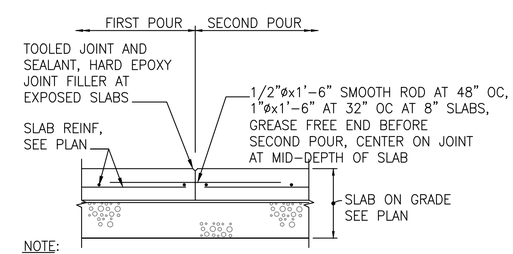

NOTE:
SLAB COLD JOINT IS AT CONTRACTOR'S OPTION.
USE SAW CUT JOINT IF COLD JOINT IS NOT REQUIRED.

TYPICAL SLAB JOINT SJ-1

4 S-005 TYPICAL SLAB JOINTS
SCALE: NONE

NO.	DATE	BY	REVISION

NOTICE
0 ½ 1
IF THIS BAR DOES NOT MEASURE 1" THEN DRAWING IS NOT TO SCALE

ATG DESIGNED
ATG DRAWN
PVM CHECKED

STRUCTURAL REGISTERED PROFESSIONAL ENGINEER 64239PE OREGON JANUARY 14, 2003 ALLAN T GOFFE
EXPIRES 6/30/2023

ACE ENGINEERING LLC
professional structural engineering

WEST YOST
Water. Engineered.

Sweet Home Oregon at its best!

MAHLER WATER RECLAMATION FACILITY IMPROVEMENTS PROJECT PHASE 1

TYPICAL CONCRETE DETAILS

PROJECT NO.: 936-50-21-09 | SCALE: AS NOTED | DATE: August 2022

SHEET
S-005

DocuSign Envelope ID: 09934EE9-0C55-40A3-8631-9C0AF6797111

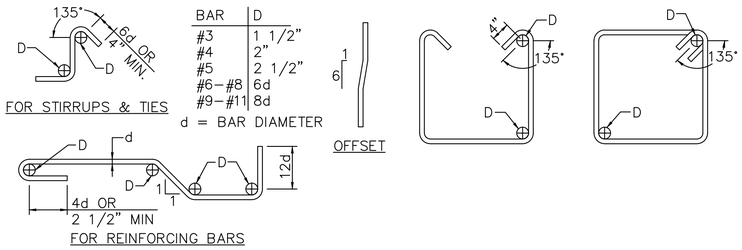

3 S-006 TYPICAL REINFORCING BENDS
SCALE: NONE

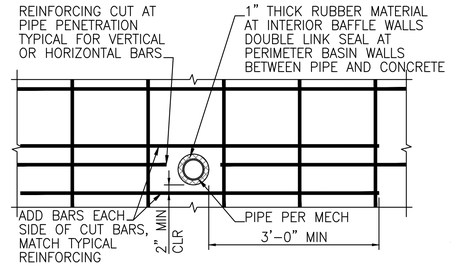

TYPICAL CONCRETE WALL PIPE PENETRATION
FOR PIPES 10"ø OR SMALLER

2 S-006 TYPICAL REINFORCING AT PIPES
SCALE: NONE

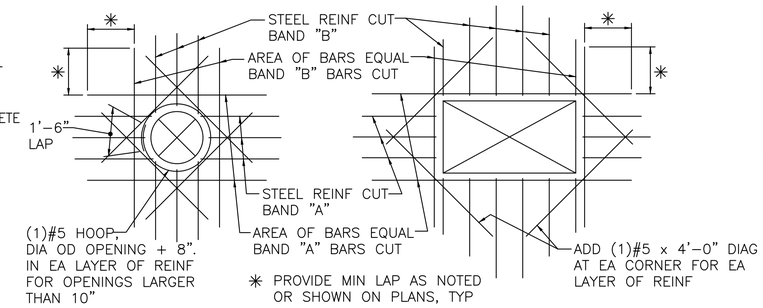

NOTE:
TYP FOR ALL OPENINGS IN CONC WALLS AND SLABS UNLESS INDICATED OTHERWISE ON PLANS.

TYPICAL CONCRETE WALL OPENING REINFORCING
FOR OPENINGS 10" AND LARGER

1 S-006 TYPICAL REINFORCING AT OPENINGS
SCALE: NONE

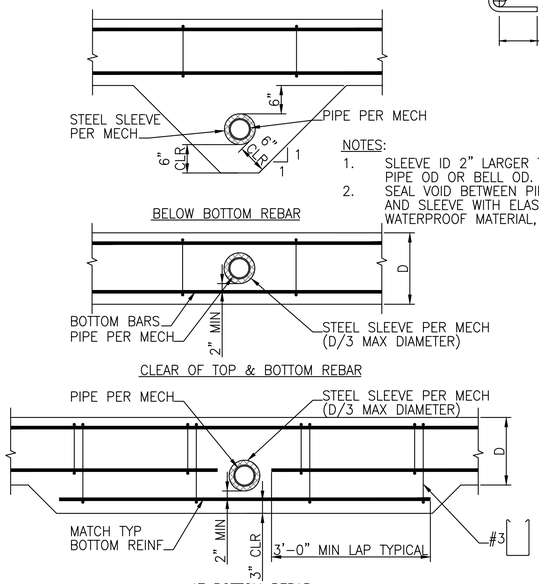

TYPICAL PIPES PERPENDICULAR TO FOOTING

5 S-006 TYPICAL PIPE THROUGH FOOTINGS
SCALE: NONE

NOTES:

1. SLEEVE ID 2" LARGER THAN PIPE OD OR BELL OD.
2. SEAL VOID BETWEEN PIPE AND SLEEVE WITH ELASTIC WATERPROOF MATERIAL, TYP.

REINFORCING BAR LAP SPLICE SCHEDULE

CONCRETE STRENGTH f'c	BAR SIZE	LAP SPLICE LENGTH
4000psi	#3	19"
	#4	26"
	#5	31"
	#6	37"
	#7	54"
	#8	62"
	#9	70"

NOTES:

1. STAGGER LAP SPLICES AT ADJACENT BARS. WHERE SPLICES CANNOT BE STAGGERED, INCREASE ABOVE VALUES BY 30%.
2. INCREASE LAP SPLICE LENGTH BY 30% FOR EPOXY COATED REINFORCING.

4 S-006 TYPICAL REINFORCING LAPS
SCALE: NONE

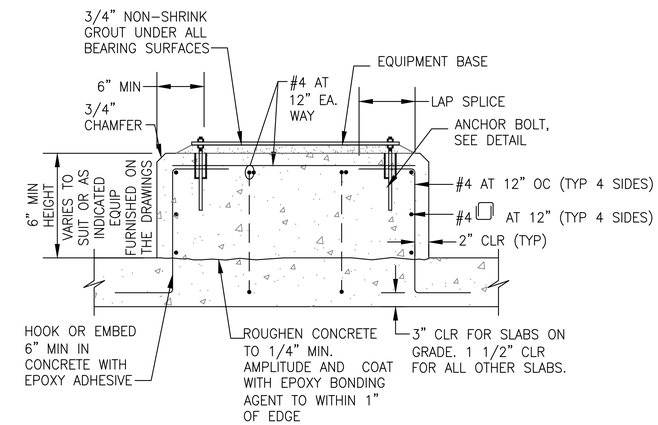

1. THE MINIMUM PAD SIZE SHALL BE AS INDICATED OR AS SHOWN ON THE DRAWINGS OR AS DETERMINED BY THE EQUIPMENT MANUFACTURER.

2. THE SIZE, NUMBER, TYPE, LOCATION AND THREAD PROJECTION OF THE ANCHOR BOLTS SHALL BE DETERMINED BY THE EQUIPMENT MANUFACTURER. HOLD CONCRETE ANCHOR BOLTS IN POSITION WITH A TEMPLATE WHILE PAD IS BEING PLACED.

3. USE ANCHOR BOLT SLEEVES TO PROVIDE THE ANCHOR BOLT A MINIMUM MOVEMENT OF 1/2" IN ALL DIRECTIONS. SLEEVES SHALL BE FILLED WITH NON–SHRINK GROUT.

4. ANCHOR BOLT SLEEVES SHALL HAVE A MINIMUM INTERNAL DIAMETER 1" GREATER AND A MAXIMUM INTERNAL DIAMETER 3" GREATER THAN ANCHOR BOLT DIAMETER.

5. EQUIPMENT BASES SHALL BE INSTALLED LEVEL U.O.N.

6. PROVIDE WEDGES OR SHIMS TO SUPPORT THE BASE WHILE THE NON–SHRINK GROUT IS PLACED. TEMPORARY LEVELING NUTS SHALL BE BACKED OFF. THE WEDGES OR SHIMS THAT REMAIN IN PLACE SHALL NOT BE EXPOSED TO VIEW.

7. WHERE CONCRETE SLAB OR BEAM THICKNESS WILL NOT ACCOMMODATE THE ANCHOR BOLT, PROVIDE EXTRA THICKNESS OF SLAB OR BEAM.

8. CONTRACTOR TO PROVIDE STRUCTURAL CALCS FOR EQUIPMENT ANCHORAGE STAMPED BY A PROFESSIONAL ENGINEER REGISTERED IN THE STATE OF OREGON.

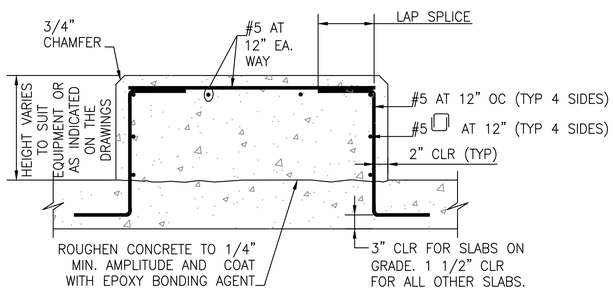

1. THE MINIMUM PAD SIZE SHALL BE AS INDICATED OR AS SHOWN ON THE DRAWINGS OR AS DETERMINED BY THE EQUIPMENT MANUFACTURER.

2. THE SIZE, NUMBER, TYPE, LOCATION AND THREAD PROJECTION OF THE ANCHOR BOLTS SHALL BE DETERMINED BY THE EQUIPMENT MANUFACTURER. HOLD CONCRETE ANCHOR BOLTS IN POSITION WITH A TEMPLATE WHILE PAD IS BEING PLACED.

3. USE ANCHOR BOLT SLEEVES TO PROVIDE THE ANCHOR BOLT A MINIMUM MOVEMENT OF 1/2" IN ALL DIRECTIONS. SLEEVES SHALL BE FILLED WITH NON–SHRINK GROUT.

4. ANCHOR BOLT SLEEVES SHALL HAVE A MINIMUM INTERNAL DIAMETER 1" GREATER AND A MAXIMUM INTERNAL DIAMETER 3" GREATER THAN ANCHOR BOLT DIAMETER.

5. EQUIPMENT BASES SHALL BE INSTALLED LEVEL U.O.N.

6. PROVIDE WEDGES OR SHIMS TO SUPPORT THE BASE WHILE THE NON–SHRINK GROUT IS PLACED. TEMPORARY LEVELING NUTS SHALL BE BACKED OFF. THE WEDGES OR SHIMS THAT REMAIN IN PLACE SHALL NOT BE EXPOSED TO VIEW.

7. WHERE CONCRETE SLAB OR BEAM THICKNESS WILL NOT ACCOMMODATE THE ANCHOR BOLT, PROVIDE EXTRA THICKNESS OF SLAB OR BEAM.

8. CONTRACTOR TO PROVIDE STRUCTURAL CALCULATIONS FOR EQUIPMENT ANCHORAGE STAMPED BY A PROFESSIONAL ENGINEER REGISTERED IN THE STATE OF OREGON.

7 S-006 TYPICAL HOUSEKEEPING PAD
SCALE: NONE

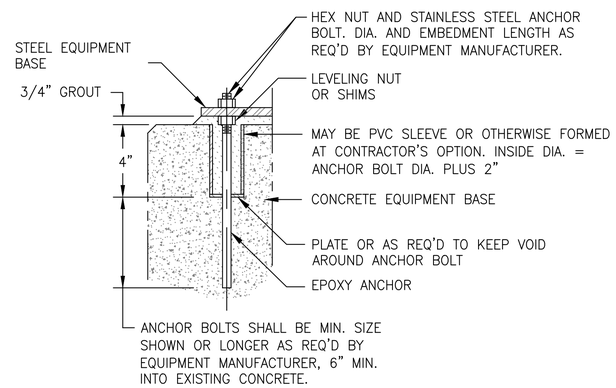

6 S-006 TYPICAL EQUIPMENT BASE
SCALE: NONE

NO.	DATE	BY	REVISION

NOTICE
0 ½ 1
IF THIS BAR DOES NOT MEASURE 1" THEN DRAWING IS NOT TO SCALE

ATG DESIGNED
ATG DRAWN
PVM CHECKED

STRUCTURAL REGISTERED PROFESSIONAL ENGINEER 64239PE OREGON JANUARY 14, 2003 ALLAN T GOFFE
EXPIRES 6/30/2023

ACE ENGINEERING LLC professional structural engineering

WEST YOST Water. Engineered.

Sweet Home Oregon ...at its best!

MAHLER WATER RECLAMATION FACILITY IMPROVEMENTS PROJECT PHASE 1

TYPICAL CONCRETE REINFORCING DETAILS

PROJECT NO.: 936-50-21-09 | SCALE: AS NOTED | DATE: August 2022

SHEET S-006

DocuSign Envelope ID: 09934EE9-0C55-40A3-8631-9C0AF6797111

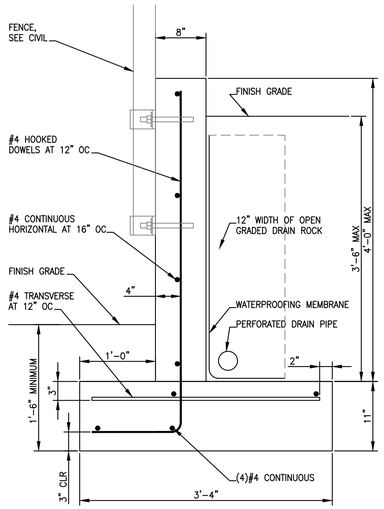

SITE RETAINING WALL 1
SCALE: 1"=1'-0"

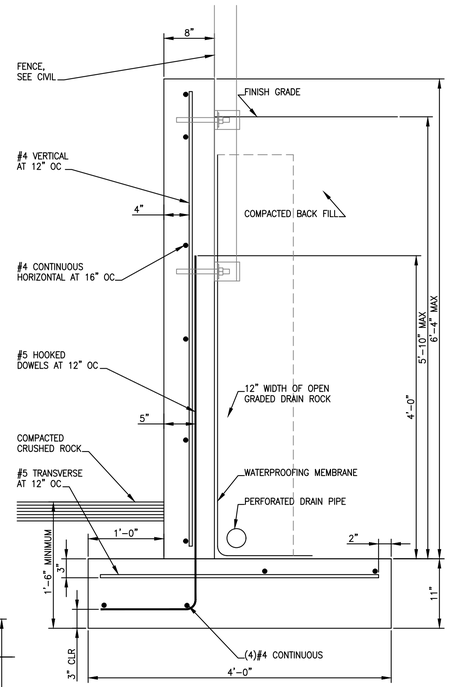

SITE RETAINING WALL 2
SCALE: 1"=1'-0"

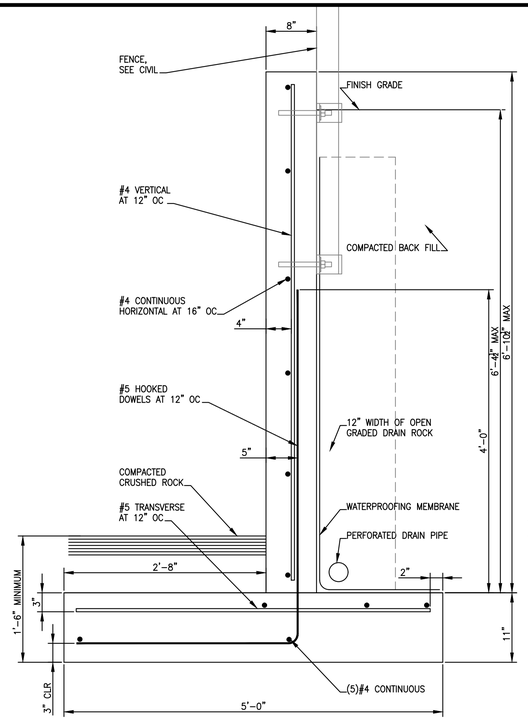

SITE RETAINING WALL 3
SCALE: 1"=1'-0"

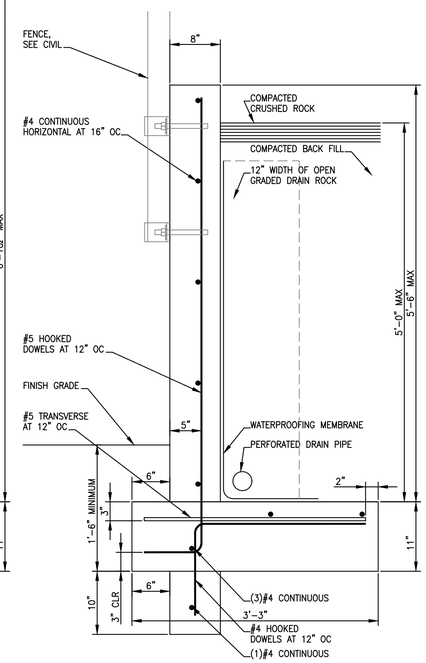

SITE RETAINING WALL 4
SCALE: 1"=1'-0"

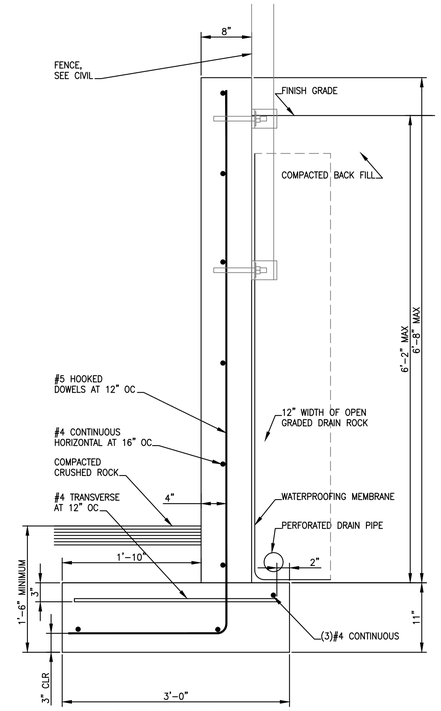

SITE RETAINING WALL 5
SCALE: 1"=1'-0"

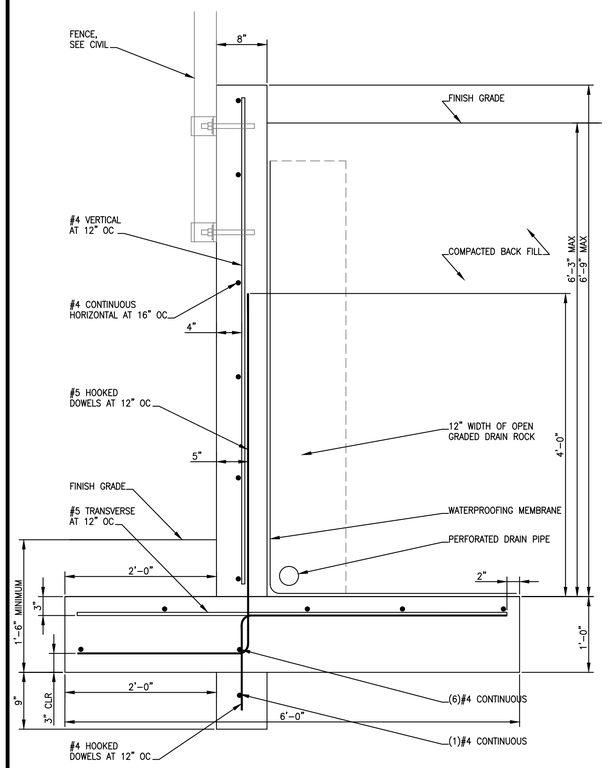

SITE RETAINING WALL 6
SCALE: 1"=1'-0"

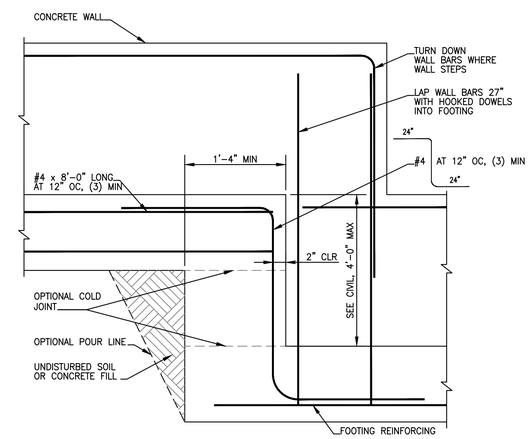

TYPICAL FOOTING STEP ELEVATION DETAIL
SCALE: NONE

NO.	DATE	BY	REVISION

NOTICE
0 ½ 1
IF THIS BAR DOES NOT MEASURE 1" THEN DRAWING IS NOT TO SCALE

BVB DESIGNED
ATG DRAWN
PVM CHECKED

STRUCTURAL REGISTERED PROFESSIONAL ENGINEER 64239PE OREGON JANUARY 14, 2003 ALLAN T GOFFE
EXPIRES 6/30/2023

ACE ENGINEERING LLC
professional structural engineering

WEST YOST
Water. Engineered.

Sweet Home Oregon at its best!

MAHLER WATER RECLAMATION FACILITY IMPROVEMENTS PROJECT PHASE 1

RETAINING WALL DETAILS

PROJECT NO.: 936-50-21-09 | SCALE: AS NOTED | DATE: August 2022

SHEET
S-100

DocuSign Envelope ID: 09934EE9-0C55-40A3-8631-9C0AF6797111

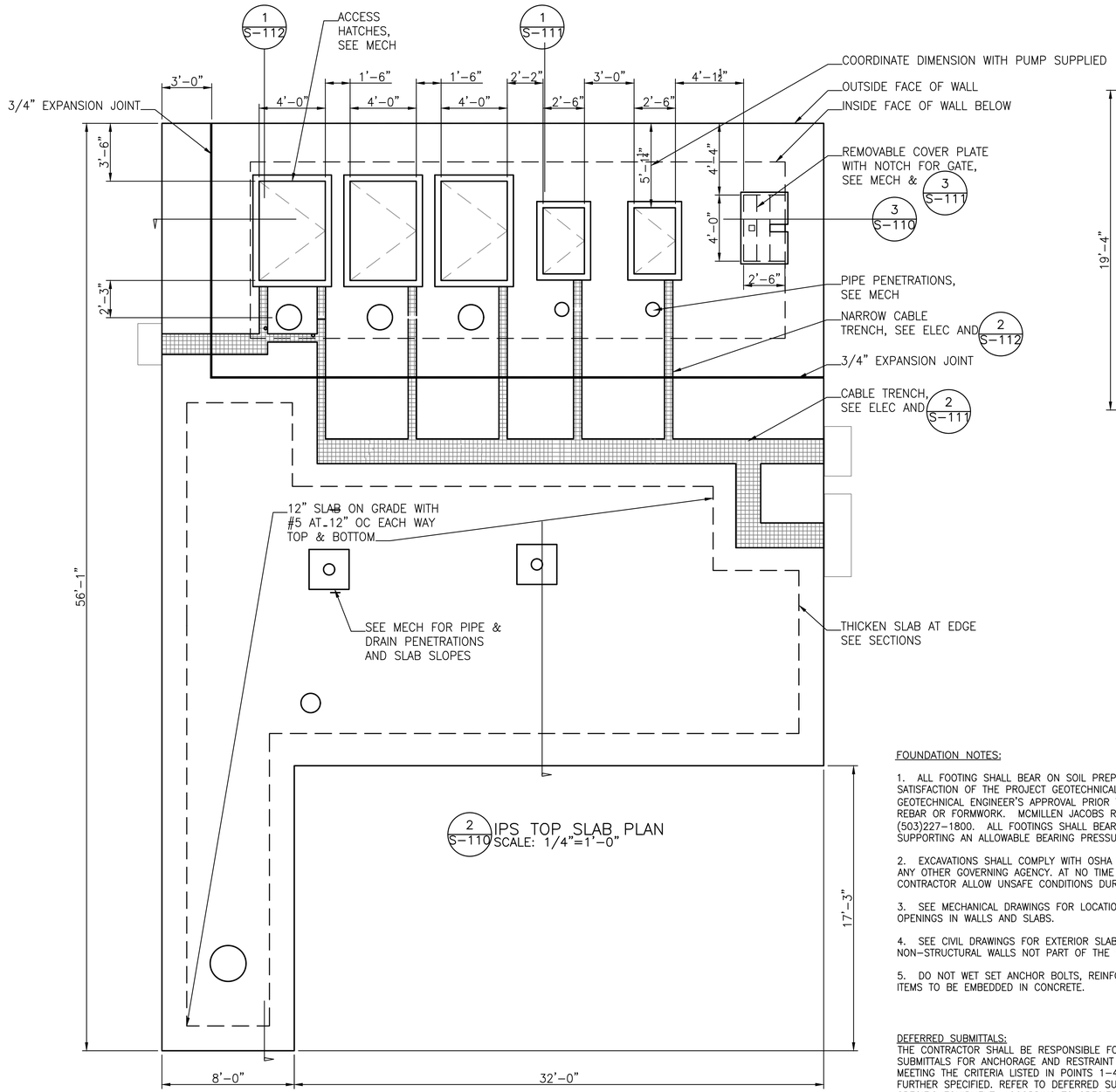

2 S-110 IPS TOP SLAB PLAN
SCALE: 1/4"=1'-0"

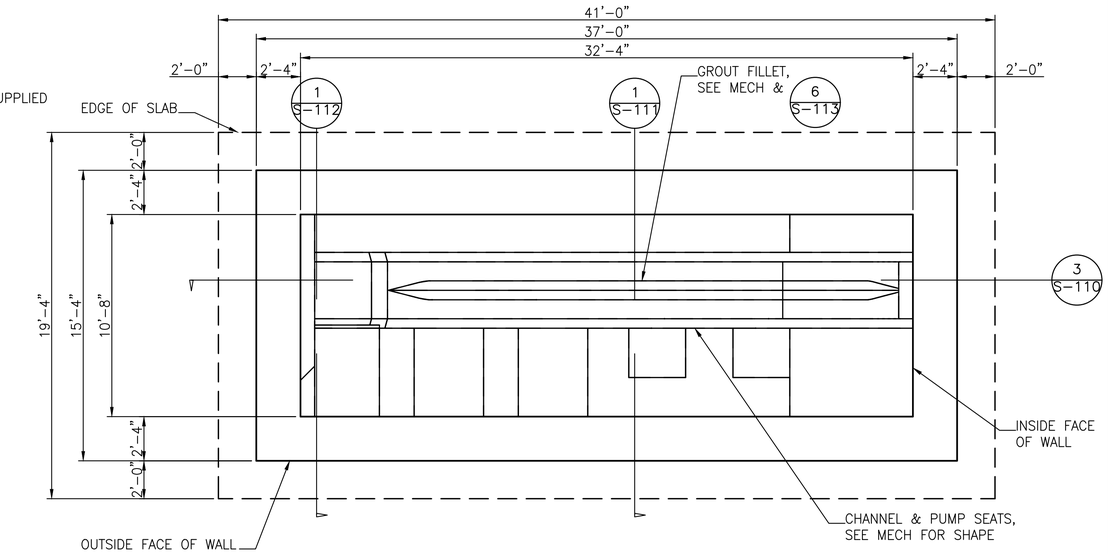

1 S-110 IPS BOTTOM SLAB PLAN
SCALE: 1/4"=1'-0"

FOUNDATION NOTES:

1. ALL FOOTING SHALL BEAR ON SOIL PREPARED TO THE SATISFACTION OF THE PROJECT GEOTECHNICAL ENGINEER. OBTAIN GEOTECHNICAL ENGINEER'S APPROVAL PRIOR TO PLACING FILL, REBAR OR FORMWORK. MCMILLEN JACOBS REPORT JULY 2022, (503)227-1800. ALL FOOTINGS SHALL BEAR ON SOIL CAPABLE OF SUPPORTING AN ALLOWABLE BEARING PRESSURE OF 2000 PSF.

2. EXCAVATIONS SHALL COMPLY WITH OSHA REQUIREMENTS AND ANY OTHER GOVERNING AGENCY. AT NO TIME SHALL THE CONTRACTOR ALLOW UNSAFE CONDITIONS DURING CONSTRUCTION.

3. SEE MECHANICAL DRAWINGS FOR LOCATION AND DIMENSION OF OPENINGS IN WALLS AND SLABS.

4. SEE CIVIL DRAWINGS FOR EXTERIOR SLABS, SIDEWALKS AND NON-STRUCTURAL WALLS NOT PART OF THE STRUCTURE.

5. DO NOT WET SET ANCHOR BOLTS, REINFORCING OR OTHER ITEMS TO BE EMBEDDED IN CONCRETE.

DEFERRED SUBMITTALS:
THE CONTRACTOR SHALL BE RESPONSIBLE FOR DEFERRED SUBMITTALS FOR ANCHORAGE AND RESTRAINT OF EQUIPMENT MEETING THE CRITERIA LISTED IN POINTS 1-4 BELOW AND AS FURTHER SPECIFIED. REFER TO DEFERRED SUBMITTAL LIST FOR SPECIFIC EQUIPMENT. ACCORDING TO SPECIFICATION SECTION 013300, DEFERRED SUBMITTALS MAY REQUIRE 12 OR MORE WEEKS OF REVIEW BY THE PERMITTING AGENCY, FROM CONTRACTOR SUBMISSION TO FINAL DATE OF APPROVAL.

1. 400 POUNDS OR MORE ON GROUND.
2. 75 POUNDS OR MORE SUSPENDED FROM CEILING.
3. 5 POUNDS PER FOOT OR MORE OF PIPING OR CONDUITS.
4. ALL MECHANICAL AND ELECTRICAL COMPONENT SUPPORT AND CONNECTIONS TO THE STRUCTURE UNLESS EXEMPT BY ASCE 7-16 AS MODIFIED BY THE 2019 OSSC.

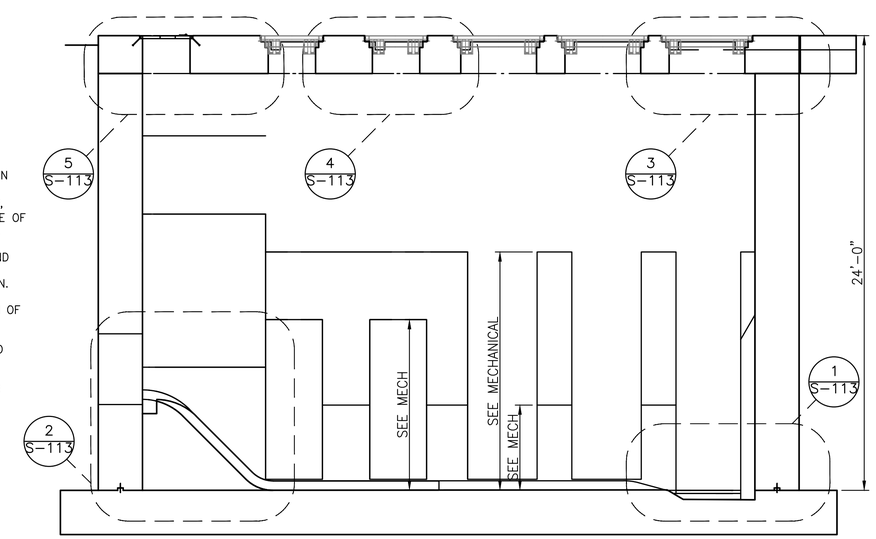

3 S-110 IPS LONGITUDINAL SECTION
SCALE: 1/4"=1'-0"

NO.	DATE	BY	REVISION
△			
△			
△			
△			
△			
△			
△			

NOTICE
0 ½ 1
IF THIS BAR DOES NOT MEASURE 1" THEN DRAWING IS NOT TO SCALE

WJS DESIGNED
ATG DRAWN
PVM CHECKED

STRUCTURAL REGISTERED PROFESSIONAL ENGINEER 64239PE OREGON JANUARY 14, 2003 ALLAN T GOFFE
EXPIRES 6/30/2023

ACE ENGINEERING LLC
professional structural engineering

WEST YOST
Water. Engineered.

Sweet Home Oregon at its best!

MAHLER WATER RECLAMATION FACILITY IMPROVEMENTS PROJECT PHASE 1

INFLUENT PUMP STATION PLANS & SECTIONS

PROJECT NO.: 936-50-21-09 | SCALE: 1/4"=1'-0" | DATE: August 2022

SHEET
S-110
51 of 135

DocuSign Envelope ID: 09934EE9-0C55-40A3-8631-9C0AF6797111

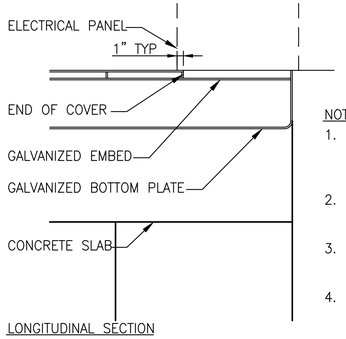

LONGITUDINAL SECTION

NOTES:

1. UNLESS OTHERWISE SPECIFIED, PROVIDE 4 FASTENERS APPROX 4" FROM THE CORNERS OF EACH PIECE OF ALUMINUM COVER.
2. ALUMINUM COVER SHALL BE REMOVABLE, NO PIECE SHALL WEIGH MORE THAN 80 LBS.
3. PROVIDE CONTINUOUS 1/8" FILLET WELDS AT ALL JOINTS.
4. COAT ALL ALUMINUM SURFACE IN CONTACT WITH CONCRETE WITH BITUMASTIC SEALER.

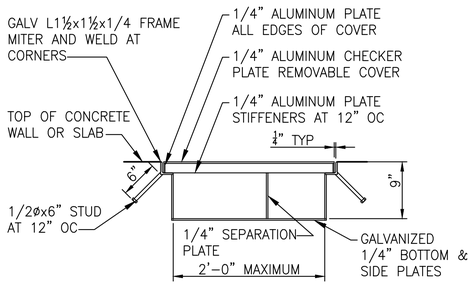

TRANSVERSE SECTION

2 S-111 TYPICAL CABLE TRENCH DETAIL
SCALE: NONE

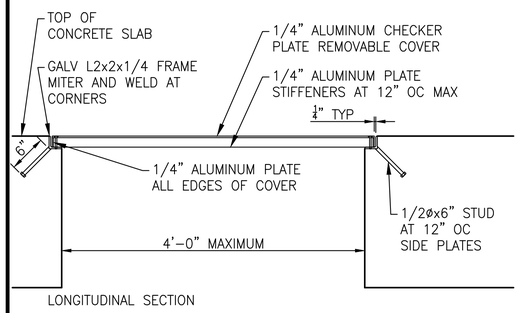

LONGITUDINAL SECTION

NOTES:

1. ALUMINUM COVER SHALL BE REMOVABLE, NO PIECE SHALL WEIGH MORE THAN 80 LBS.
2. PROVIDE CONTINUOUS 1/8" FILLET WELDS AT ALL JOINTS.
3. COAT ALL ALUMINUM SURFACE IN CONTACT WITH CONCRETE WITH BITUMASTIC SEALER.

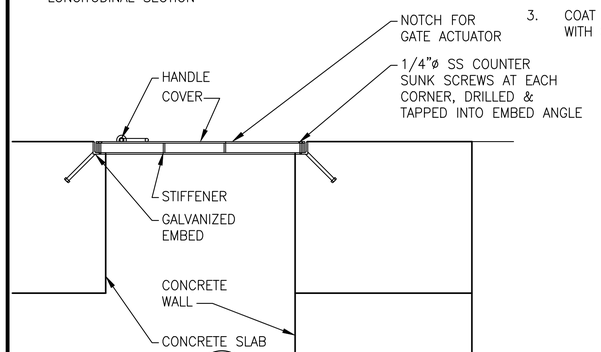

TRANSVERSE SECTION

3 S-111 TYPICAL REMOVABLE COVER DETAIL
SCALE: NONE

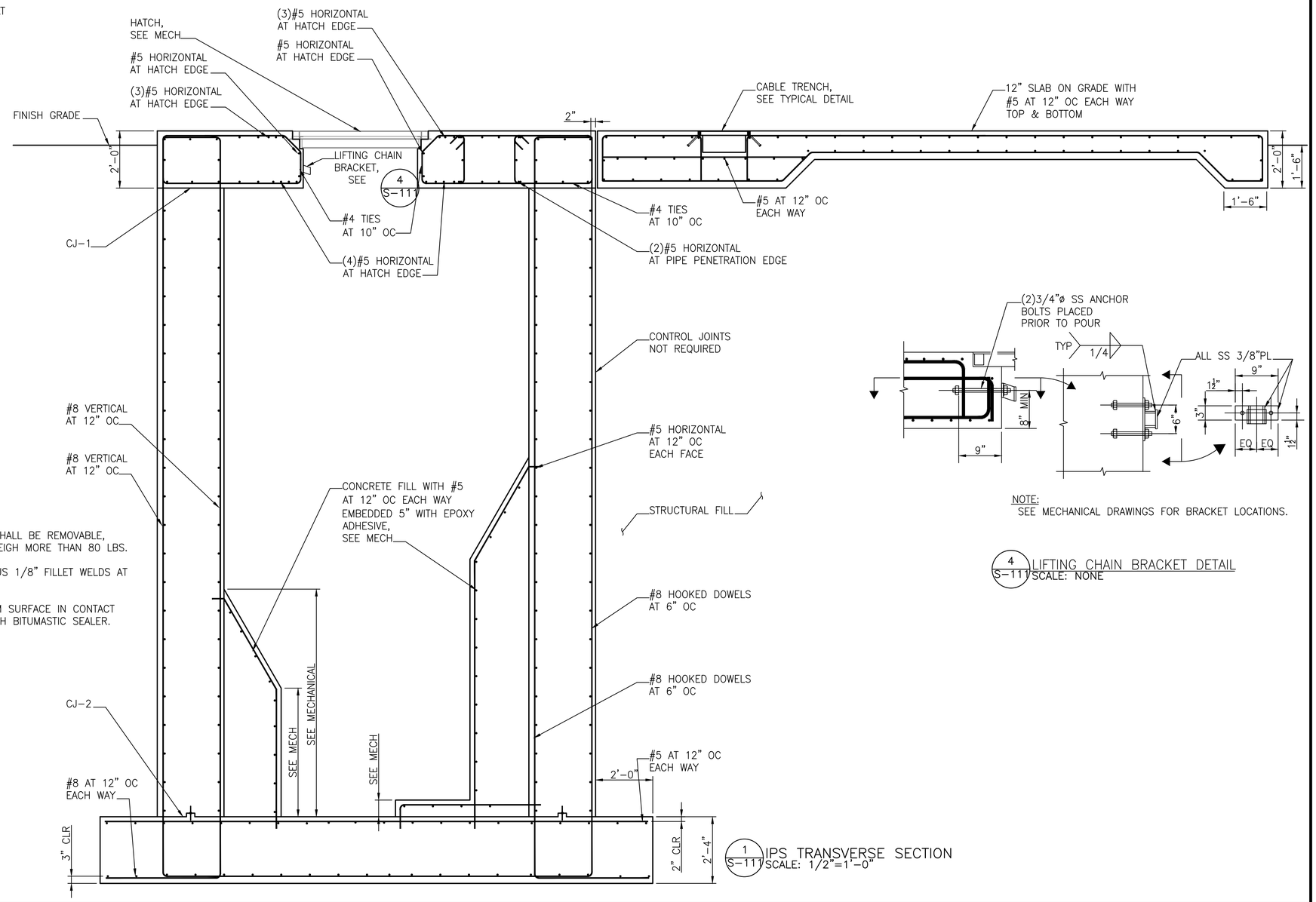

1 S-111 IPS TRANSVERSE SECTION
SCALE: 1/2"=1'-0"

NOTE:
SEE MECHANICAL DRAWINGS FOR BRACKET LOCATIONS.

4 S-111 LIFTING CHAIN BRACKET DETAIL
SCALE: NONE

NO.	DATE	BY	REVISION

NOTICE
0 ½ 1
IF THIS BAR DOES NOT MEASURE 1" THEN DRAWING IS NOT TO SCALE

WJS DESIGNED
ATG DRAWN
PVM CHECKED

STRUCTURAL REGISTERED PROFESSIONAL ENGINEER 64239PE OREGON JANUARY 14, 2022 ALLAN T GOFFE
EXPIRES 6/30/2023

ACE ENGINEERING LLC
professional structural engineering

WEST YOST
Water. Engineered.

Sweet Home Oregon ...at its best!

MAHLER WATER RECLAMATION FACILITY IMPROVEMENTS PROJECT PHASE 1

INFLUENT PUMP STATION TRANSVERSE SECTION

PROJECT NO.: 936-50-21-09 | SCALE: AS NOTED | DATE: August 2022

SHEET
S-111
52 of 135

DocuSign Envelope ID: 09934EE9-0C55-40A3-8631-9C0AF6797111

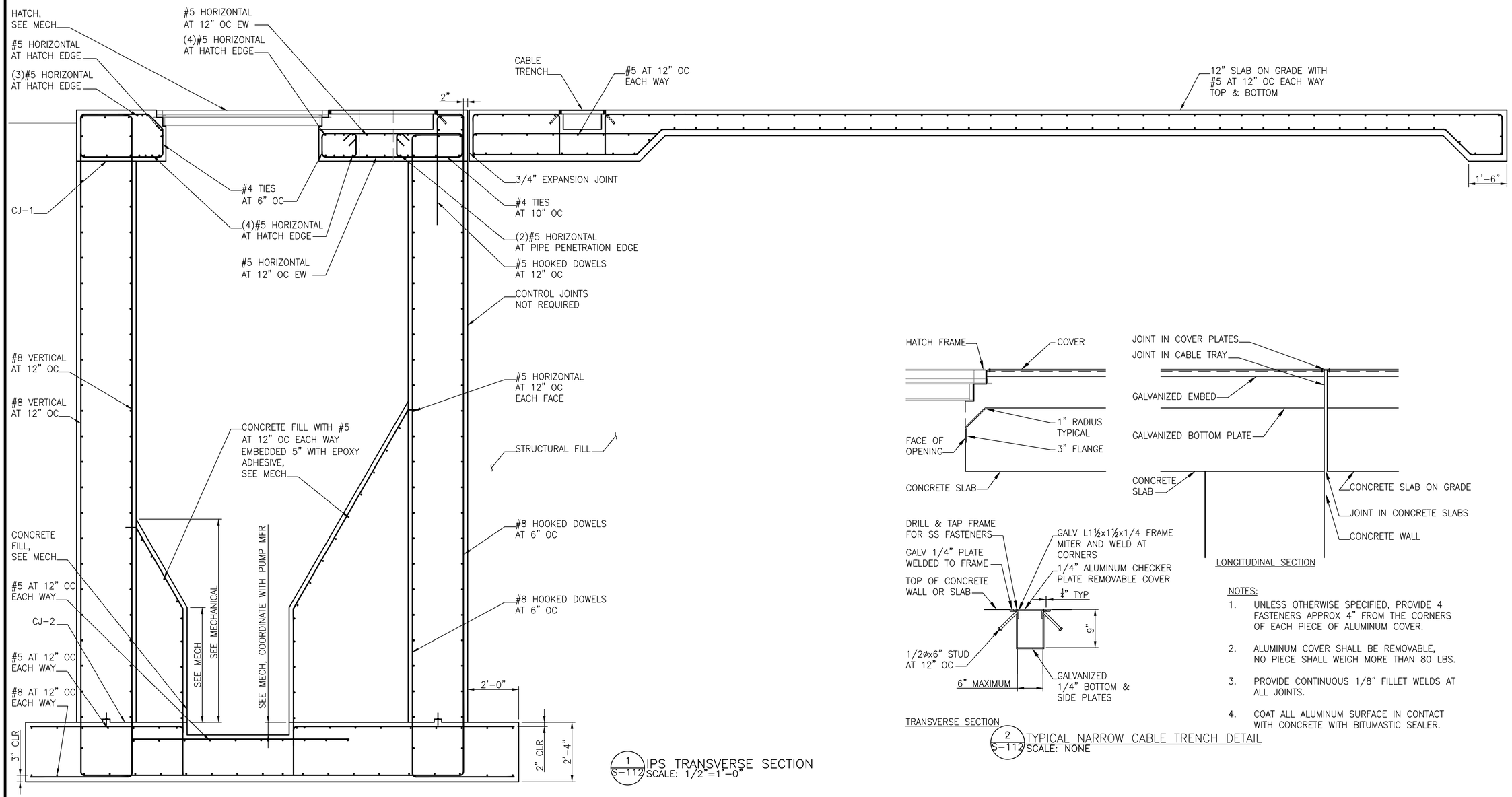

1 S-112 IPS TRANSVERSE SECTION
SCALE: 1/2"=1'-0"

TRANSVERSE SECTION

LONGITUDINAL SECTION

NOTES:

1. UNLESS OTHERWISE SPECIFIED, PROVIDE 4 FASTENERS APPROX 4" FROM THE CORNERS OF EACH PIECE OF ALUMINUM COVER.
2. ALUMINUM COVER SHALL BE REMOVABLE, NO PIECE SHALL WEIGH MORE THAN 80 LBS.
3. PROVIDE CONTINUOUS 1/8" FILLET WELDS AT ALL JOINTS.
4. COAT ALL ALUMINUM SURFACE IN CONTACT WITH CONCRETE WITH BITUMASTIC SEALER.

2 S-112 TYPICAL NARROW CABLE TRENCH DETAIL
SCALE: NONE

NO.	DATE	BY	REVISION

NOTICE
0 ½ 1
IF THIS BAR DOES NOT MEASURE 1" THEN DRAWING IS NOT TO SCALE

WJS DESIGNED
ATG DRAWN
PVM CHECKED

STRUCTURAL REGISTERED PROFESSIONAL ENGINEER 64239PE OREGON JANUARY 14, 2003 ALLAN T GOFFE
EXPIRES 6/30/2023

ACE ENGINEERING LLC
professional structural engineering

WEST YOST
Water. Engineered.

Sweet Home Oregon at its best!

MAHLER WATER RECLAMATION FACILITY IMPROVEMENTS PROJECT PHASE 1

INFLUENT PUMP STATION TRANSVERSE SECTION

PROJECT NO.: 936-50-21-09 | SCALE: AS NOTED | DATE: August 2022

SHEET
S-112
53 of 135

DocuSign Envelope ID: 09934EE9-0C55-40A3-8631-9C0AF6797111

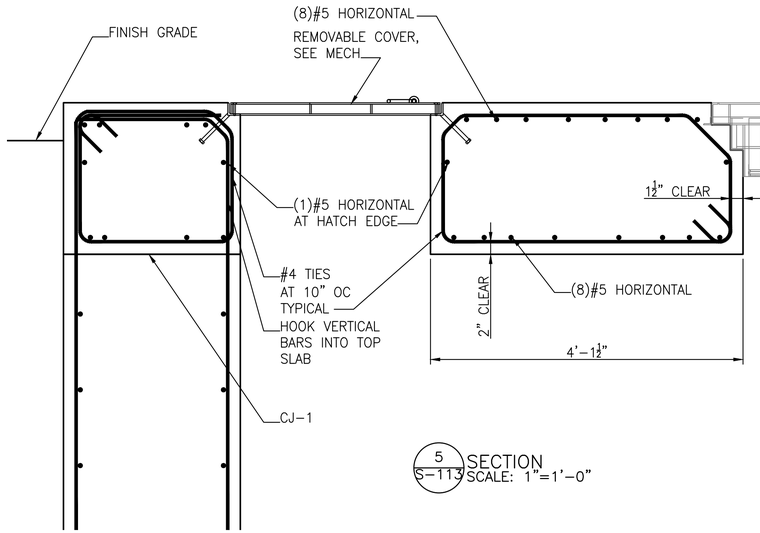

5 S-113 SECTION SCALE: 1"=1'-0"

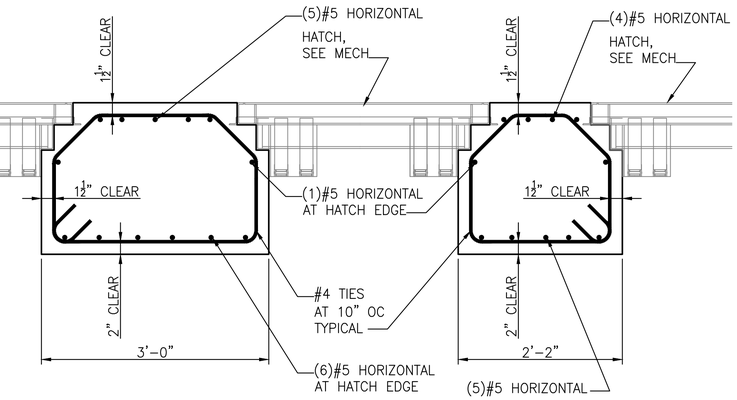

4 S-113 SECTION SCALE: 1"=1'-0"

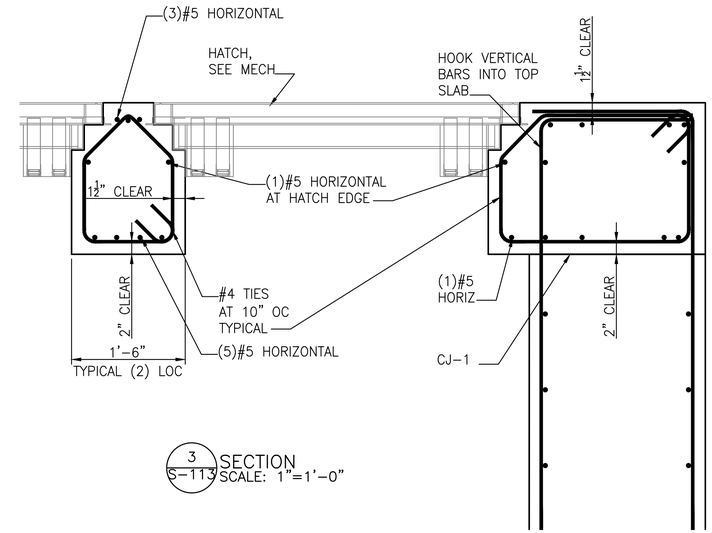

3 S-113 SECTION SCALE: 1"=1'-0"

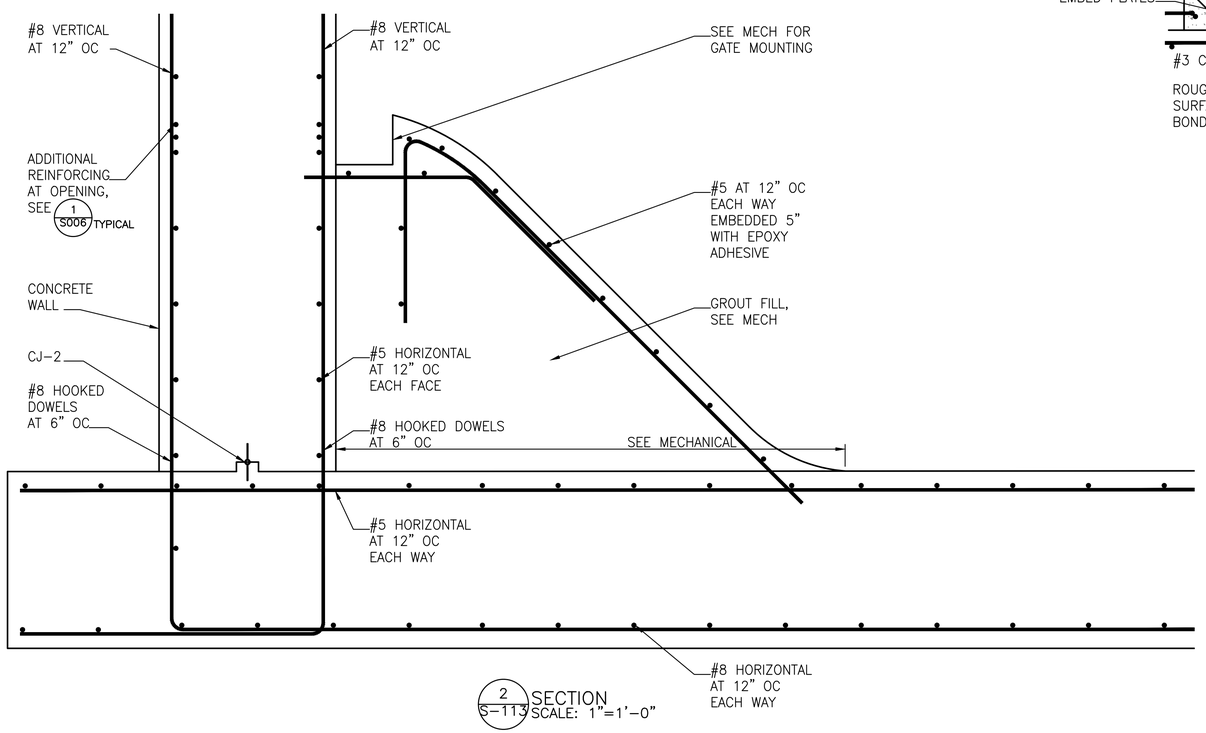

2 S-113 SECTION SCALE: 1"=1'-0"

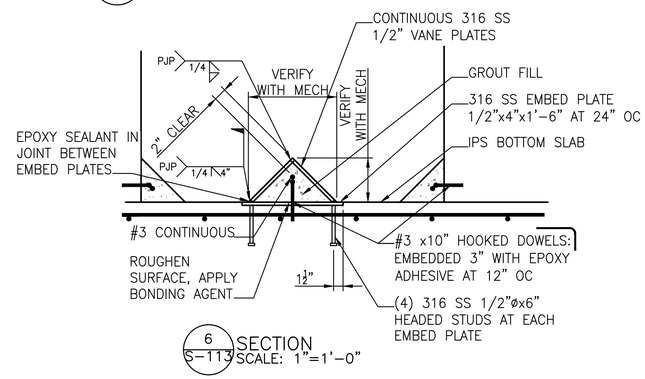

6 S-113 SECTION SCALE: 1"=1'-0"

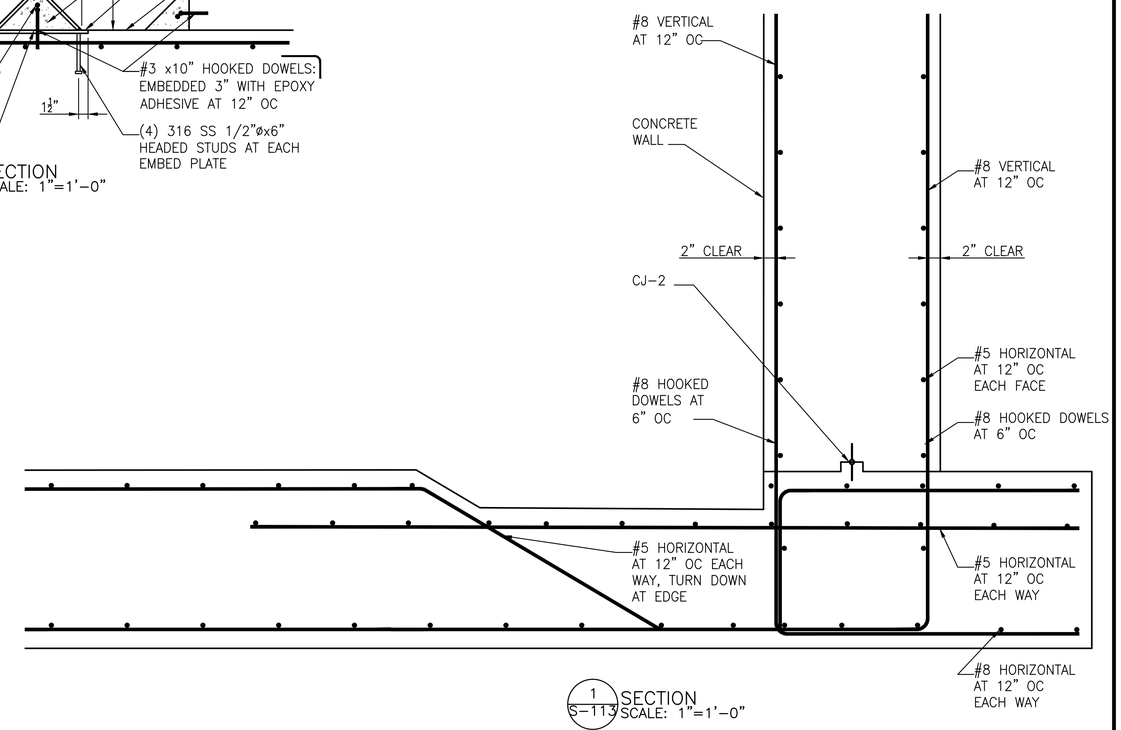

1 S-113 SECTION SCALE: 1"=1'-0"

NO.	DATE	BY	REVISION

NOTICE
0 ½ 1
IF THIS BAR DOES NOT MEASURE 1" THEN DRAWING IS NOT TO SCALE

WSJ DESIGNED
ATG DRAWN
PVM CHECKED

STRUCTURAL REGISTERED PROFESSIONAL ENGINEER 64239PE OREGON JANUARY 14, 2003 ALLAN T GOFFE
EXPIRES 6/30/2023

ACE ENGINEERING LLC professional structural engineering

WEST YOST Water. Engineered.

Sweet Home Oregon ...at its best!

MAHLER WATER RECLAMATION FACILITY IMPROVEMENTS PROJECT PHASE 1

INFLUENT PUMP STATION SECTIONS & DETAILS

PROJECT NO.: 936-50-21-09 | SCALE: 1"=1'-0" | DATE: August 2022

SHEET S-113

54 of 135

DocuSign Envelope ID: 09934EE9-0C55-40A3-8631-9C0AF6797111

NOTE:
SEE CIVIL FOR PRECAST MANHOLE INSTALLATION DETAILS.

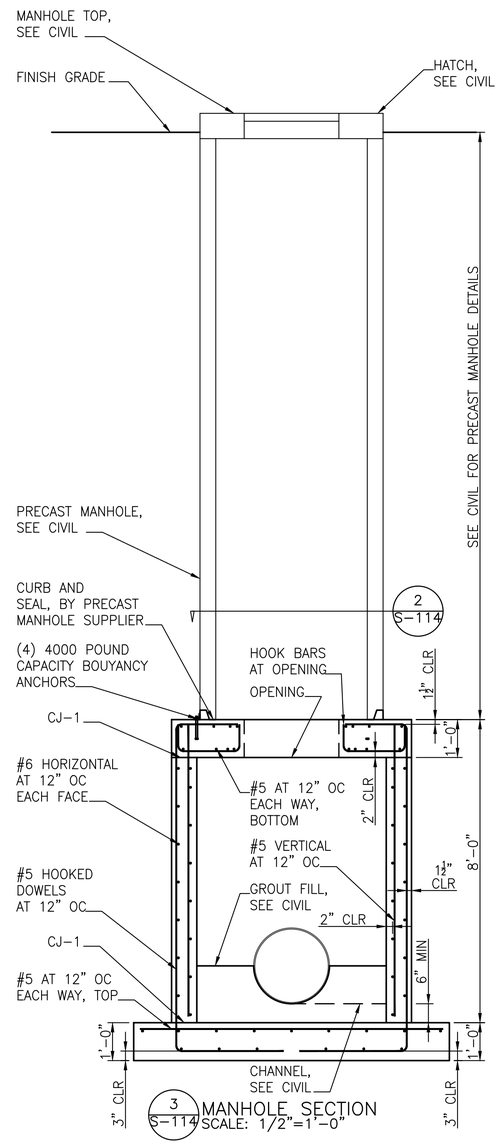

3 S-114 MANHOLE SECTION
SCALE: 1/2"=1'-0"

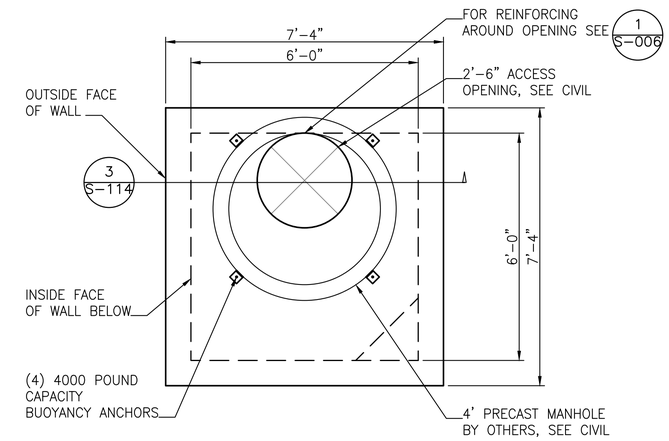

2 S-114 MANHOLE TOP PLAN
SCALE: 1/2"=1'-0"

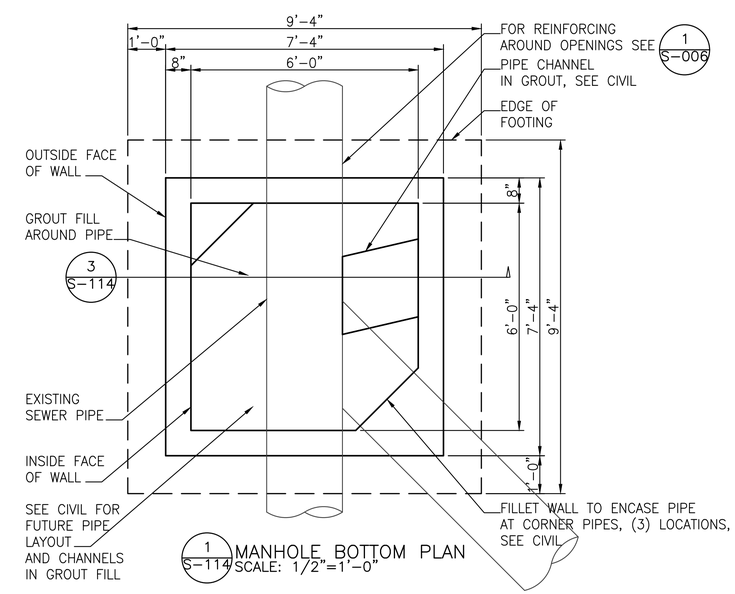

1 S-114 MANHOLE BOTTOM PLAN
SCALE: 1/2"=1'-0"

NO.	DATE	BY	REVISION

NOTICE
0 ½ 1
IF THIS BAR DOES NOT MEASURE 1" THEN DRAWING IS NOT TO SCALE

WJS DESIGNED
ATG DRAWN
PVM CHECKED

STRUCTURAL REGISTERED PROFESSIONAL ENGINEER 64239PE OREGON JANUARY 14, 2005 ALLAN T GOFFE
EXPIRES 6/30/2023

ACE ENGINEERING LLC
professional structural engineering

WEST YOST
Water. Engineered.

Sweet Home Oregon at its best!

MAHLER WATER RECLAMATION FACILITY IMPROVEMENTS PROJECT PHASE 1

EXISTING INFLUENT SEWER DIVERSION STRUCTURES

PROJECT NO.: 936-50-21-09 | SCALE: 1/2"=1'-0" | DATE: August 2022

SHEET
S-114
55 of 135

DocuSign Envelope ID: 09934EE9-0C55-40A3-8631-9C0AF6797111

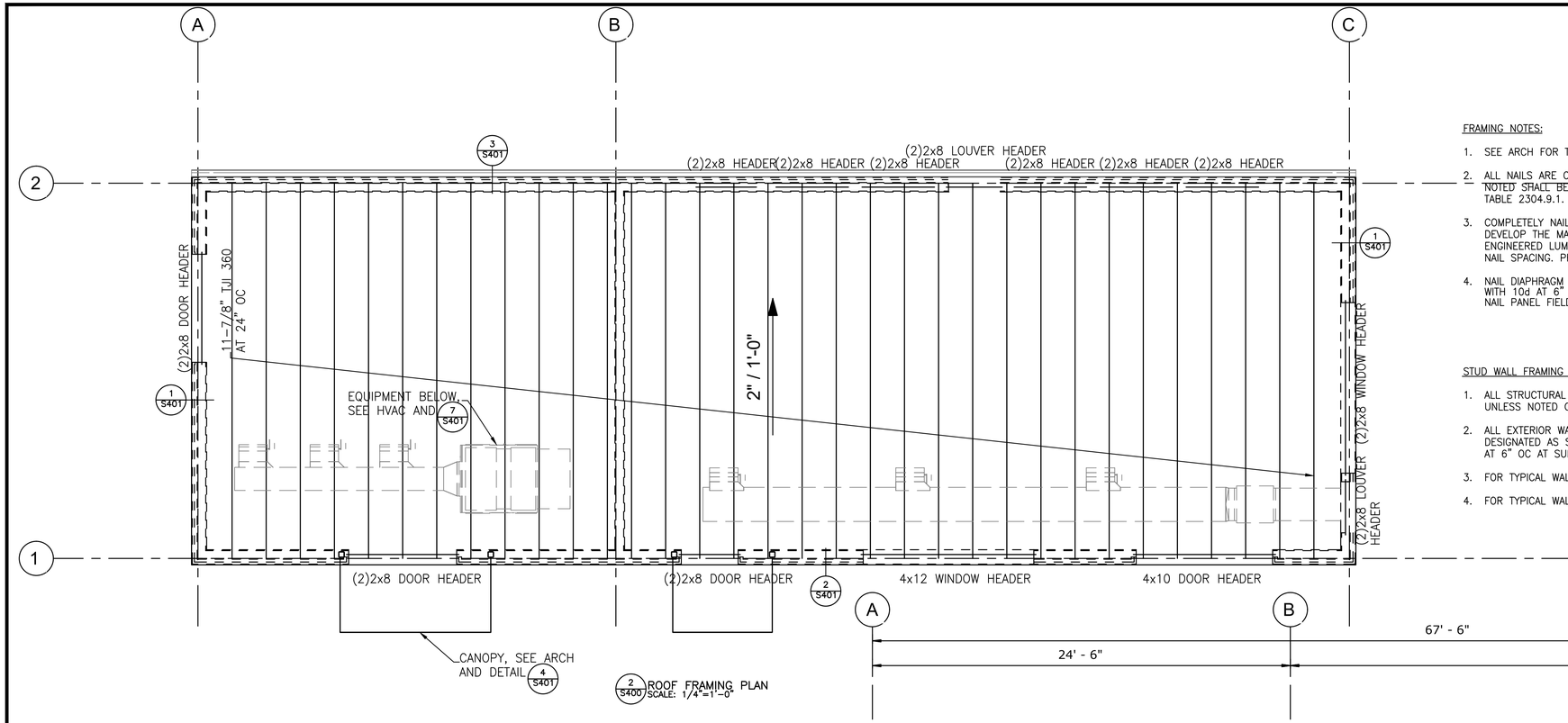

2 S400 ROOF FRAMING PLAN
SCALE: 1/4"=1'-0"

FRAMING NOTES:

1. SEE ARCH FOR TOP OF PLATE ELEVATIONS.
2. ALL NAILS ARE COMMON UNO. NAILING OF CONNECTIONS NOT NOTED SHALL BE FASTENED IN ACCORDANCE WITH OSSC TABLE 2304.9.1.
3. COMPLETELY NAIL ALL METAL CONNECTORS AND HANGERS TO DEVELOP THE MAXIMUM CAPACITY OF THE CONNECTOR. FOR ENGINEERED LUMBER DO NOT EXCEED MANUFACTURER'S MINIMUM NAIL SPACING. PREDRILL IF REQUIRED TO PREVENT SPLITTING.
4. NAIL DIAPHRAGM BOUNDARIES AND SUPPORTED PANEL EDGES WITH 10d AT 6" OC.
   NAIL PANEL FIELD WITH 10d AT 12" OC.

STUD WALL FRAMING NOTES:

1. ALL STRUCTURAL WALLS SHALL BE 2x6 DF STUDS AT 24" OC UNLESS NOTED OTHERWISE.
2. ALL EXTERIOR WALLS SHALL BE SHEATHED. WALLS NOT DESIGNATED AS SHEAR WALLS MAY BE FASTENED WITH 8d AT 6" OC AT SUPPORTED PANEL EDGES UNLESS NOTED OTHERWISE.
3. FOR TYPICAL WALL OPENING CONSTRUCTION DETAILS SEE 10 S401
4. FOR TYPICAL WALL TOP PLATE SPLICE DETAILS SEE 11 S401

DEFERRED SUBMITTALS:
THE CONTRACTOR SHALL BE RESPONSIBLE FOR DEFERRED SUBMITTALS FOR ANCHORAGE AND RESTRAINT OF EQUIPMENT MEETING THE CRITERIA LISTED IN POINTS 1–4 BELOW AND AS FURTHER SPECIFIED. REFER TO DEFERRED SUBMITTAL LIST FOR SPECIFIC EQUIPMENT. ACCORDING TO SPECIFICATION SECTION 013300, DEFERRED SUBMITTALS MAY REQUIRE 12 OR MORE WEEKS OF REVIEW BY THE PERMITTING AGENCY, FROM CONTRACTOR SUBMISSION TO FINAL DATE OF APPROVAL.

1. 400 POUNDS OR MORE ON GROUND.
2. 75 POUNDS OR MORE SUSPENDED FROM CEILING.
3. 5 POUNDS PER FOOT OR MORE OF PIPING OR CONDUITS.
4. ALL MECHANICAL AND ELECTRICAL COMPONENT SUPPORT AND CONNECTIONS TO THE STRUCTURE UNLESS EXEMPT BY ASCE 7–16 AS MODIFIED BY THE 2019 OSSC.

FOUNDATION NOTES:

1. ALL FOOTING SHALL BEAR ON SOIL PREPARED TO THE SATISFACTION OF THE PROJECT GEOTECHNICAL ENGINEER. OBTAIN GEOTECHNICAL ENGINEER'S APPROVAL PRIOR TO PLACING FILL, REBAR OR FORMWORK. MCMILLEN JACOBS REPORT JULY 2022, (503)227–1800. ALL FOOTINGS SHALL BEAR ON SOIL CAPABLE OF SUPPORTING AN ALLOWABLE BEARING PRESSURE OF 2000 PSF.
2. EXCAVATIONS SHALL COMPLY WITH OSHA REQUIREMENTS AND ANY OTHER GOVERNING AGENCY. AT NO TIME SHALL THE CONTRACTOR ALLOW UNSAFE CONDITIONS DURING CONSTRUCTION.
3. SEE ARCHITECTURAL DRAWINGS FOR LOCATION AND DIMENSION OF WALL OPENINGS.
4. SEE ARCHITECTURAL AND CIVIL DRAWINGS FOR EXTERIOR SLABS AND NON–STRUCTURAL WALLS NOT PART OF THE STRUCTURE.
5. DO NOT WET SET ANCHOR BOLTS, REINFORCING OR OTHER ITEMS TO BE EMBEDDED IN CONCRETE OR STRUCTURAL MASONRY.

SHEAR WALL SCHEDULE

SYMBOL	SHEATHING	EDGE NAILING (EN)	FIELD NAILING (FN)	RIM OR BLOCKING CONNECTION	1/2" ø ANCHOR BOLT SPACING	NOTES:
SW0	1 SIDE CDX	8d AT 6" OC	8d AT 12" OC	10d TOE NAILS AT 6" OC	48" OC	UNBLOCKED
SW1	1 SIDE CDX	8d AT 6" OC	8d AT 12" OC	10d TOE NAILS AT 6" OC	48" OC	2x FRAMING & BLOCKING AT ALL PANEL EDGES
SW3	1 SIDE CDX	8d AT 3" OC	8d AT 12" OC	10d TOE NAILS AT 3" OC	20" OC	3x FRAMING & BLOCKING AT ADJOINING PANEL EDGES

NOTES:
1. ALL NAILS SHALL BE COMMON OR GALVANIZED BOX AND HAVE 1½" PENETRATION MINIMUM.
   COMMON: 8d=0.131"ø, 10d=0.148"ø, 16d=0.162"ø;
   GALVANIZED BOX: 8d=0.113"ø, 10d=0.128"ø, 16d=0.135"ø.
2. PROVIDE SHEAR WALL SHEATHING CONTINUOUS BETWEEN HOLD DOWNS, UNLESS SPECIFICALLY DETAILED.
3. PROVIDE EDGE NAILING FULL HEIGHT TO POSTS, JAMB STUDS, TRIMMER STUDS AND STUDS WHICH HOLD DOWNS ARE FASTEND TO. PROVIDE EDGE NAILING CONTINUOUSLY TO ALL WALL TOP AND SILL PLATES.
4. ALL ANCHOR BOLTS WITHIN SHEAR WALL ZONE SHALL INCLUDE 3/16"x3"x3" PLATE WASHERS. ANCHOR BOLTS SHALL BE LOCATED WITHIN 12" OF END OF EACH SILL PIECE AND AS NOTED.

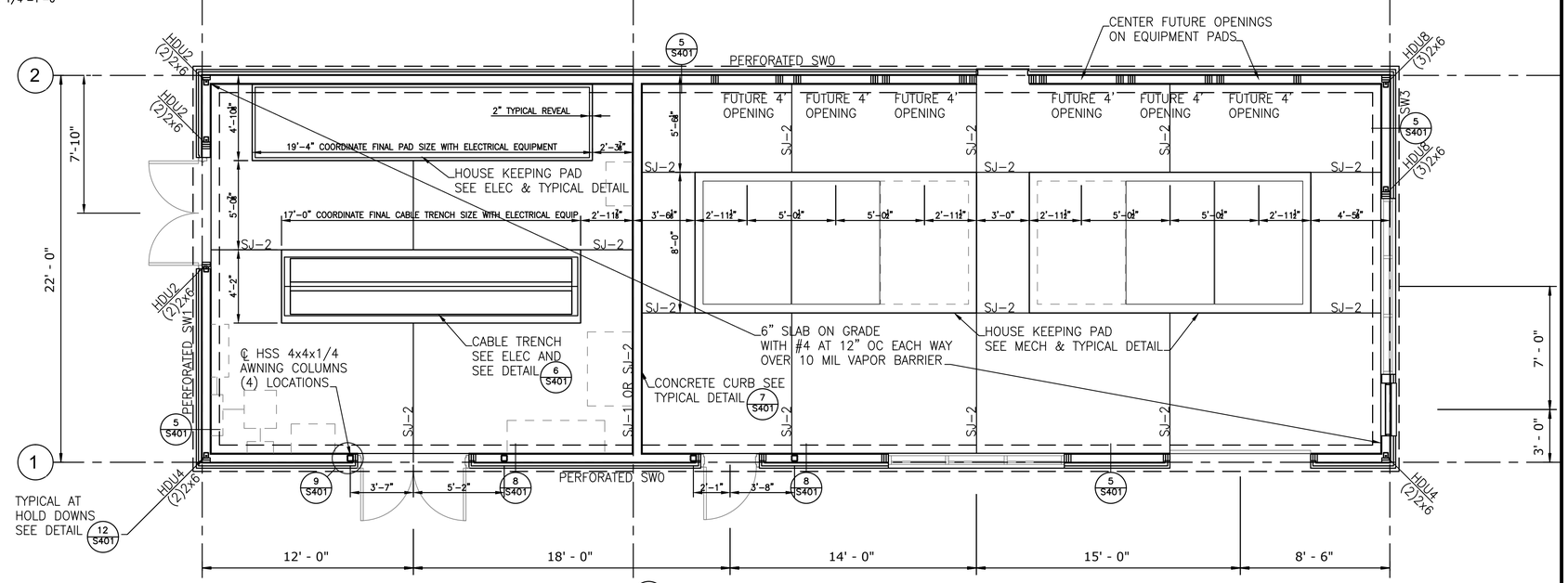

1 S400 FOUNDATION PLAN
SCALE: 1/4"=1'-0"

NO.	DATE	BY	REVISION

NOTICE
0 ½ 1
IF THIS BAR DOES NOT MEASURE 1" THEN DRAWING IS NOT TO SCALE

WJS DESIGNED
ATG DRAWN
PVM CHECKED

STRUCTURAL REGISTERED PROFESSIONAL ENGINEER 64239PE OREGON JANUARY 14, 2003 ALLAN T GOFFE
EXPIRES 6/30/2023

ACE ENGINEERING LLC
professional structural engineering

WEST YOST
Water. Engineered.

Sweet Home Oregon as it's best!

MAHLER WATER RECLAMATION FACILITY IMPROVEMENTS PROJECT PHASE 1

MAIN ELECTRICAL & BLOWER BUILDING FOUNDATION & ROOF FRAMING PLANS

PROJECT NO.: 936-50-21-09 | SCALE: 1/4"=1'-0" | DATE: August 2022

SHEET
S-400

DocuSign Envelope ID: 09934EE9-0C55-40A3-8631-9C0AF6797111

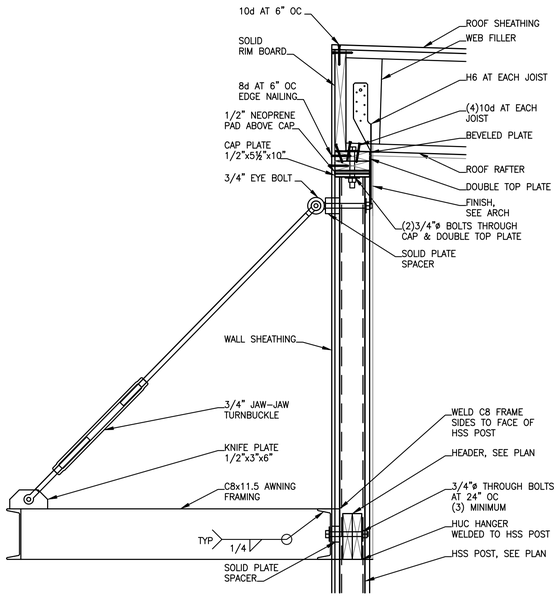

4 S401 DETAIL SCALE: 1"=1'-0"

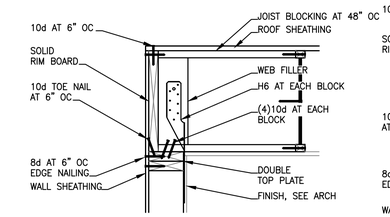

1 S401 DETAIL SCALE: 1"=1'-0"

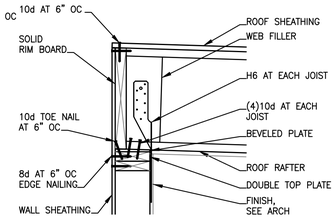

2 S401 DETAIL SCALE: 1"=1'-0"

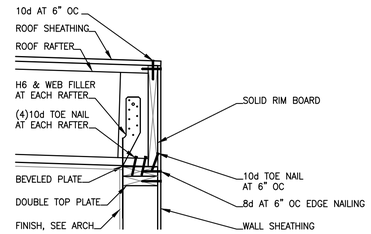

3 S401 DETAIL SCALE: 1"=1'-0"

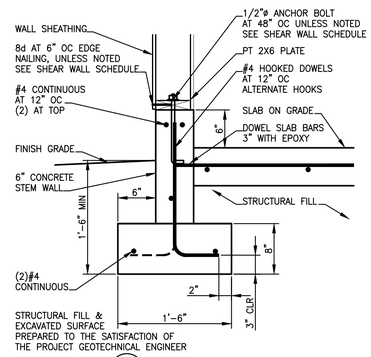

5 S401 DETAIL SCALE: 1"=1'-0"

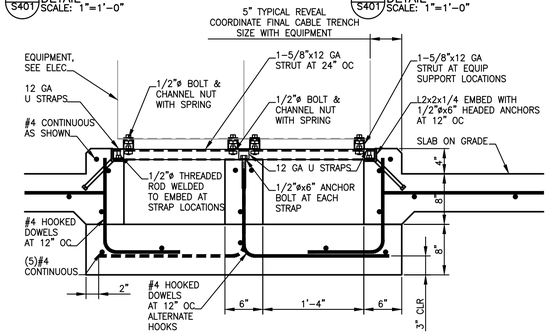

6 S401 DETAIL SCALE: 1"=1'-0"

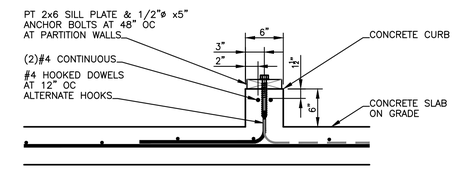

7 S401 DETAIL SCALE: 1"=1'-0"

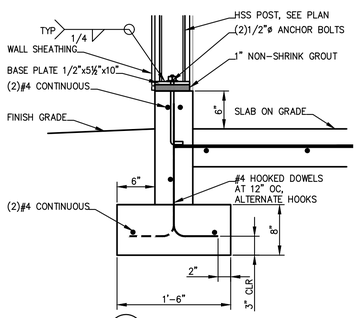

8 S401 DETAIL SCALE: 1"=1'-0"

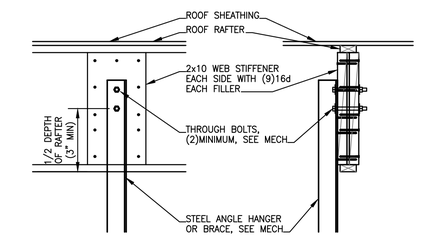

TYPICAL EQUIPMENT HANGER/BRACE DETAIL

13 S401 DETAIL SCALE: 1"=1'-0"

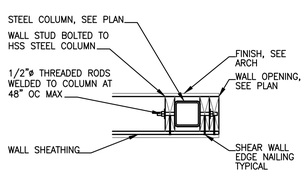

TYPICAL STUD WALL TO HSS DETAIL

9 S401 DETAIL SCALE: 1"=1'-0"

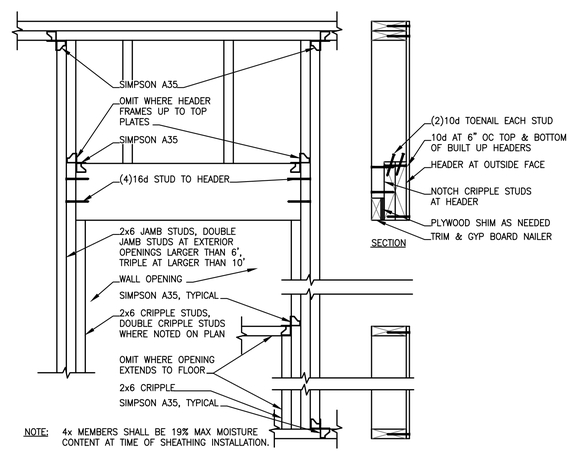

NOTE: 4x MEMBERS SHALL BE 19% MAX MOISTURE CONTENT AT TIME OF SHEATHING INSTALLATION.

TYPICAL HEADER DETAIL

10 S401 DETAIL SCALE: 1"=1'-0"

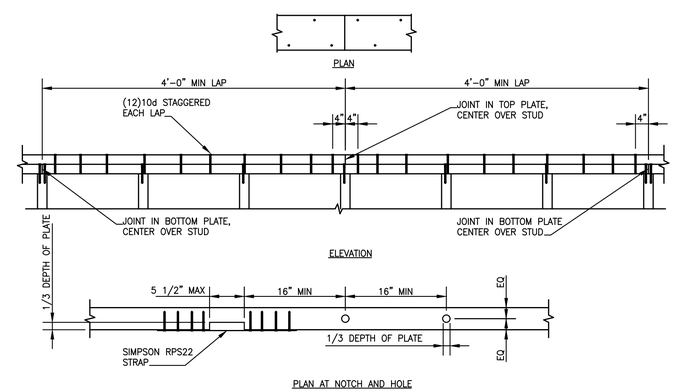

TYPICAL TOP PLATE SPLICE DETAIL

11 S401 DETAIL SCALE: 1"=1'-0"

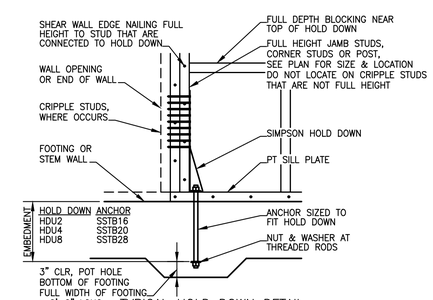

EMBEDMENT	HOLD DOWN	ANCHOR
	HDU2	SSTB16
	HDU4	SSTB20
	HDU8	SSTB28

TYPICAL HOLD DOWN DETAIL

12 S401 DETAIL SCALE: 1"=1'-0"

NO.	DATE	BY	REVISION

NOTICE

0 ½ 1

IF THIS BAR DOES NOT MEASURE 1" THEN DRAWING IS NOT TO SCALE

ATG DESIGNED
ATG DRAWN
PVM CHECKED

STRUCTURAL REGISTERED PROFESSIONAL ENGINEER 64239PE OREGON JANUARY 14, 2003 ALLAN T GOFFE
EXPIRES 6/30/2023

ACE ENGINEERING LLC
professional structural engineering

WEST YOST
Water. Engineered.

Sweet Home Oregon at its best!

MAHLER WATER RECLAMATION FACILITY IMPROVEMENTS PROJECT PHASE 1

MAIN ELECTRICAL & BLOWER BUILDING FOUNDATION & FRAMING DETAILS

PROJECT NO.: 936-50-21-09 | SCALE: 1"=1'-0" | DATE: August 2022

SHEET S-401

DocuSign Envelope ID: 09934EE9-0C55-40A3-8631-9C0AF6797111

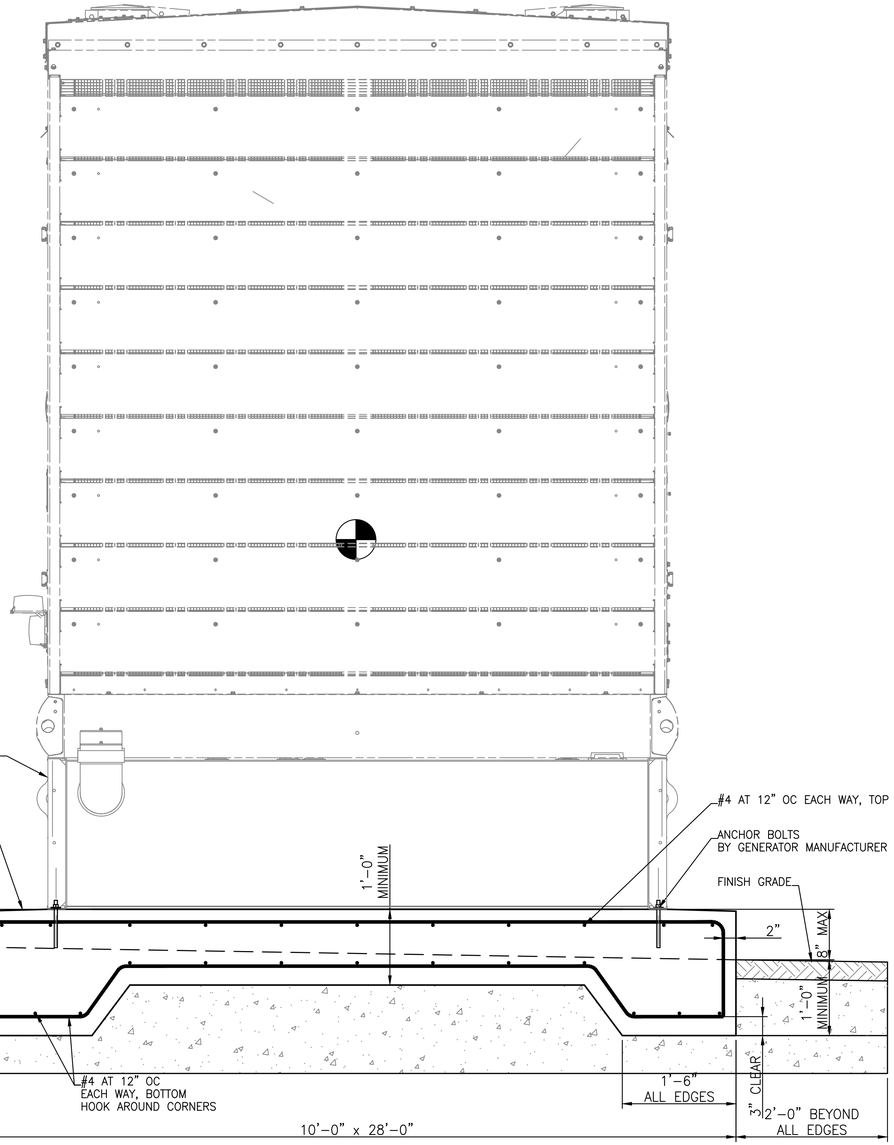

2 / S402 SECTION
SCALE: 1"=1'-0"

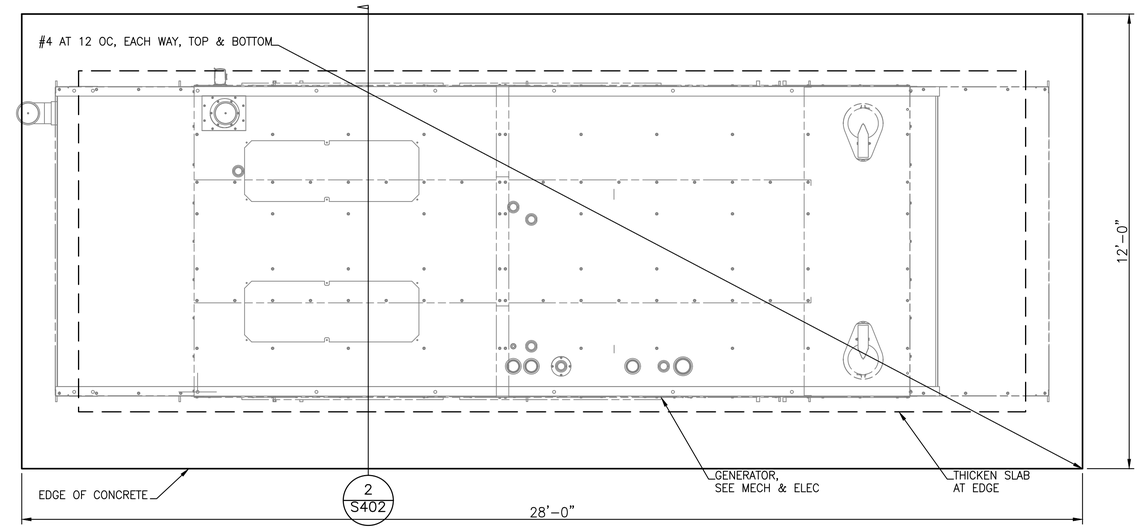

1 / S402 FOUNDATION PLAN
SCALE: 1/2"=1'-0"

NO.	DATE	BY	REVISION

NOTICE
0 ½ 1
IF THIS BAR DOES NOT MEASURE 1" THEN DRAWING IS NOT TO SCALE

WJS DESIGNED
ATG DRAWN
PVM CHECKED

STRUCTURAL REGISTERED PROFESSIONAL ENGINEER 64239PE OREGON JANUARY 14, 2003 ALLAN T GOFFE
EXPIRES 6/30/2023

ACE ENGINEERING LLC
professional structural engineering

WEST YOST
Water. Engineered.

Sweet Home Oregon at its best!

MAHLER WATER RECLAMATION FACILITY IMPROVEMENTS PROJECT PHASE 1

GENERATOR FOUNDATION PLAN & SECTION

PROJECT NO.: 936-50-21-09 | SCALE: AS NOTED | DATE: August 2022

SHEET
S-402

DocuSign Envelope ID: 09934EE9-0C55-40A3-8631-9C0AF6797111

GENERAL MECHANICAL NOTES

1. THE MECHANICAL DRAWINGS SHOW ONLY GENERAL ARRANGEMENTS FOR THE PIPING AND EQUIPMENT AND DO NOT INCLUDE ALL THE PIPING LOGIC, VALVES, INSTRUMENTS, CONTROL DEVICES, AND APPURTENANCES THAT ARE INCLUDED IN THE PROCESS AND INSTRUMENTATION DIAGRAMS OR REQUIRED BY THE SPECIFICATIONS. CONTRACTOR SHALL PROVIDE ALL PIPING, EQUIPMENT, AND APPURTENANT DEVICES, INCLUDING ALL THAT ARE INDICATED IN EITHER THE MECHANICAL DRAWINGS, PROCESS AND INSTRUMENTATION DIAGRAMS, OR THE SPECIFICATIONS TO PROVIDE COMPLETE PROCESS SYSTEMS.
2. EQUIPMENT AND PIPING COORDINATION AND INSTALLATION DRAWINGS ARE REQUIRED. SEE DIVISION 40 SPECIFICATIONS. THE CIVIL, YARD PIPING, AND MECHANICAL DRAWINGS SHOW ADDITIONAL PIPING DETAILS.
3. PIPE SUPPORTS AND SEISMIC RESTRAINTS SHALL BE PROVIDED PER THE MECHANICAL DETAILS AND THE SPECIFICATIONS. AT LOCATIONS WHERE SPECIFIC TYPES OF SUPPORTS OR SEISMIC RESTRAINTS ARE INDICATED, PROVIDE THE INDICATED TYPES. AT LOCATIONS WHERE SUPPORTS OR SEISMIC RESTRAINTS ARE REQUIRED BUT NO SPECIFIC TYPES ARE INDICATED, SELECT AND PROVIDE SUPPORTS AND RESTRAINTS IN ACCORDANCE WITH DETAILS ON DRAWINGS M–001 – M–003. SUPPORTS AND RESTRAINTS SHALL BE SUBMITTED FOR REVIEW AS PART OF THE EQUIPMENT AND PIPING COORDINATION AND INSTALLATION DRAWINGS.
4. THE NUMBER OF PIPE SUPPORTS SHOWN IN THE DRAWINGS IS THE MINIMUM. PROVIDE CALCULATIONS SHOWING THE REQUIRED SIZE AND SPACING OF ALL PIPE SUPPORTS.
5. PIPE PENETRATIONS THROUGH STRUCTURE WALLS, FLOOR, AND CEILINGS SHALL BE PROVIDED AS SHOWN ON DRAWING M–004 UNLESS OTHERWISE INDICATED.

GENERAL PIPE SUPPORT NOTES

1. WHERE NO REFERENCE TO PIPE SUPPORT SYSTEMS IS GIVEN ON THE DRAWINGS, USE APPROPRIATE SYSTEM. SEE TABLE B, THIS DRAWING. PIPE AND CONDUIT SUPPORT SYSTEMS SHALL BE DESIGNED TO MEET THE MINIMUM LOAD AND SPAN REQUIREMENTS SPECIFIED.
2. UNLESS OTHERWISE SPECIFIED, HANGERS, ATTACHMENTS AND SUPPORTS SHALL BE TYPE 316 STAINLESS STEEL. NUTS, BOLTS AND WASHERS SHALL BE TYPE 316 STAINLESS STEEL.
3. UNLESS OTHERWISE SPECIFIED, EXPANSION ANCHORS SHALL NOT BE USED WITHOUT PRIOR APPROVAL BY THE ENGINEER.
4. MSS REFERS TO THE MANUFACTURERS STANDARDIZATION SOCIETY OF THE VALVE AND FITTINGS INDUSTRY, STANDARD PRACTICE SP58 AND SP69.
5. HANGER BRACKETS AND SUPPORT COMPONENTS MAY BE INTERCHANGED.
6. CONCRETE INSERTS IN AREAS BELOW WATER SURFACE OR NORMALLY SUBJECT TO SUBMERGENCE SHALL BE EMBEDDED ANCHOR BOLTS, EPOXY ANCHORS, OR EQUAL.
7. PROVIDE PLASTIC OR RUBBER CHANNEL END CAPS AT EXPOSED ENDS OF CHANNELS 7'–0 OR LESS ABOVE FLOOR.
8. MAXIMUM DESIGN WEIGHTS AND LOADS SHALL BE AS SHOWN IN TABLE A OR AS SHOWN IN DETAILS ON THIS DRAWING.
9. WHEN SUPPORTING PIPING REQUIRES HORIZONTAL FLEXIBILITY NORMAL TO A STEEL BEAM'S AXIS, USE STRUCTURAL ATTACHMENTS C AND D AS SHOWN ON DRAWING M–003. TYPE F ON DRAWING M–003 SHALL BE USED FOR PARALLEL FLEXIBILITY.
10. ALL PIPING SUPPORTED BY HANGERS AND/OR STRUCTURAL ATTACHMENTS SHALL BE BRACED AGAINST HORIZONTAL, VERTICAL, AXIAL, AND LONGITUDINAL SWAY, BRACINGS SHALL BE CALCULATED TO RESIST SEISMIC LOADINGS AS SPECIFIED BY SMACNA AND AS INDICATED IN THE SPECIFICATIONS.
11. FITTINGS SHALL NOT BE LESS THAN MSS CL B.
12. UNLESS OTHERWISE SPECIFIED, TRAPEZE AND PIPE RACK COMPONENTS SHALL HAVE A MINIMUM STEEL THICKNESS OF 12 GAGE WITH A MAXIMUM DEFLECTION 1/240 OF THE SPAN. MINIMUM CHANNEL COMPONENT SIZE SHALL BE 1⅝" SQUARE AS MANUFACTURED BY SUPER STRUT, UNISTRUT, ELCEN, OR EQUAL.
13. FOR STRUCTURAL ATTACHMENTS, SEE DWG M–003.
14. NOT ALL PIPE HANGERS ARE USED IN THESE CONTRACT DRAWINGS.
15. DESIGN ANCHOR BOLTS OR CHEMICAL ANCHORS FOR ALL PIPE SUPPORTS AND SEISMIC RESTRAINTS AS SPECIFIED IN DIVISION 5, DIVISION 40, AND SECTIONS U1 61 10 AND U1 61 11. IF ANCHOR BOLT SIZES AND/OR EMBEDMENTS ARE INDICATED ON DETAILS, THESE ARE THE MINIMUM REQUIREMENTS. PROVIDE CALCULATIONS AS SPECIFIED IN SECTION 01612.

SEISMIC BRACING NOTES

1. ALL PIPES SHALL BE BRACED TO RESIST LATERAL AND LONGITUDINAL SEISMIC LOADS IN ACCORDANCE WITH DIVISION 40 SPECIFICATIONS.
2. SEE TABLE C FOR MAXIMUM SPACING AND PIPE SIZES
3. SEE TABLE D FOR ACCEPTABLE PIPE HANGERS
4. PROVIDE 1/16" THICK NEOPRENE ISOLATION BETWEEN COPPER PIPING AND HANGERS

TABLE A

HANGER & SUPPORT SPACING AND ALLOWABLE ROD LOADS

NOMINAL PIPE SIZE (INCHES)	SUPPORT ROD SIZE & MAXIMUM LOAD PER ROD, SEE NOTE 2		MAXIMUM PIPE SPAN (FEET), SEE NOTE 3			
	ROD SIZE (INCHES)	MAXIMUM LOAD (POUNDS	STEEL	COPPER	PLASTIC, SEE NOTE 4	CAST IRON, SEE NOTE 5
⅜ to ¾	⅜	610	5	5	CONTIN UOUS	–
1	⅜	610	5	5	5	–
1¼	⅜	610	5	5	5	–
1½	⅜	610	5	5	5	–
2	⅜	610	10	5	5	12 FEET FOR PRESSURE PIPE 10 FEET FOR SOIL PIPE
2½	⅜	610	10	10	5	
3	⅜	610	10	20	5	
4	⅜	1130	10	20	5	
6	⅝	1810	15	20	5	
8	¾	2710	15	20	5	
10	¾	2710	20	–	5	
12	⅞	3770	20	–	10	
14	1	4960	20	–	–	
16	1	4960	20	–	–	
18	1	4960	20	–	–	
20	1¼	8000	20	–	–	
24	1¼	8000	20	–	–	

TABLE A NOTES:
1. DESIGN WEIGHT SHALL BE TWICE THE WEIGHT OF THE PIPE FULL OF WATER PLUS THE WEIGHTS OF VALVES, FITTINGS, INSULATING MATERIALS AND SUSPENDED HANGER COMPONENTS ON THE RUN OF PIPE BEING SUPPORTED.
2. ROD SIZES SHOWN ARE FOR THE SUPPORT OF A SINGLE PIPE. WHEN SUPPORTING MORE THAN ONE PIPE, ROD SHALL BE SIZED USING THE DESIGN WEIGHTS (SEE NOTE 1) TO DETERMINE THE TOTAL DESIGN LOAD. THE TOTAL DESIGN LOAD SHALL NOT EXCEED THE MAXIMUM LOADS IN THE TABLE.
3. PIPE SHALL NOT HAVE POCKETS FORMED IN THE SPAN DUE TO SAGGING OF THE PIPE BETWEEN SUPPORTS CAUSED BY THE WEIGHT OF THE PIPE, MEDIUM IN THE PIPE, INSULATION, VALVES AND FITTINGS.
4. SPAN SHOWN IS FOR SCHEDULE 80 PVC PIPE AT 100'F. SPANS FOR OTHER PLASTICS, OTHER PVC PIPE SCHEDULES AND PIPES AT HIGHER TEMPERATURES SHALL BE SHORTENED IN ACCORDANCE WITH THE PIPE MANUFACTURER'S RECOMMENDATIONS. "CONTINUOUS" MEANS PIPE SHALL BE IN UNISTRUT OR SIMILAR CHANNEL.
5. PROVIDE A MINIMUM OF ONE PIPE HANGER PER PIPE LENGTH, WITHIN 4–INCHES OF THE BELL.
6. PIPE HANGER & SUPPORT SELECTION SHALL BE IN ACCORDANCE WITH TABLE B AND DIVISION 40 SPECIFICATIONS.

TABLE B

HANGER & SUPPORT SELECTION

SYSTEM TEMP RANGE °F	INSULATION SEE NOTE 1	PIPE ATTACHMENT DETAIL NOS.						BUILDING STRUCTURAL ATTACHMENT TYPES			
		HORIZONTAL					VERTICAL				
		STRAPS	BANDS	CLAMPS	TRAPEZES & RACKS	STAN–CHIONS	SST RISER CLAMPS	INSERTS	BEAM CLAMPS	WELDED & BOLTED ATTACH–MENTS	BRACKET
HOT A–1 120–450	COVERED	13	1,2	3	20	10,10A	11,12	A	C,D	J,M	B,G,H,K
	BARE	6.7 13	1,2	3	20	10,10A					
AMBIENT B 60–119	COVERED	13	1,2	3	20	9,10,10A	11,12	A	C,D	J,M	B,G,H,K
	BARE	6.7 13	1,2	3	20	9,10,10A					
COLD C–1 33–59	COVERED	13	1,2,3	3	20	10,10A	11,12	A	C,D	J,M	B,G,H,K
	BARE	6.7 13	1,2,3	3	20	10,10A					

TABLE B NOTES:
1. HANGERS ON INSULATED SYSTEMS SHALL INCORPORATE THERMAL HANGER SHIELDS
2. HANGER & SUPPORT SPACING SHALL BE IN ACCORDANCE WITH TABLE A.
3. TYPE 6 AND TYPE 7 HANGERS: FOR COPPER PIPE, SECURE A 1/16" THICK NEOPRENE STRIP TO FRAMING CHANNEL WITH A COMPATIBLE WATERPROOF ADHESIVE.
4. TYPE 6 HANGER: DO NOT USE FOR HORIZONTAL PIPES LARGER THAN 2" WHEN FRAMING CHANNEL IS MOUNTED VERTICALLY
5. PROVIDE SAFETY END CAPS TO ALL FRAMING CHANNELS

TABLE C

PIPE SPAN FOR SEISMIC BRACING

NORMAL PIPE SIZES (INCHES)	MAXIMUM PIPE SPAN (FEET)	ROD SIZE (INCHES)
2	15	⅜
2½	15	⅜
3	15	⅜
4	15	⅜
6	20	½
8	20	⅝
10	30	⅝
12	30	1
14	30	1
16	35	1
18	35	1

TABLE D

HANGER TEMPERATURE & MATERIALS FOR SEISMIC BRACING

X INDICATES PIPE HANGERS SUITABLE FOR SEISMIC BRACING AT CONDITIONS LISTED BELOW	SEE DWG M003 FOR PIPE HANGER TYPE							
	1	2	3	6	7	9	10	11	13
– SERVICE TEMPERATURE –									
33°–59°F INSULATED			X			X		X	
120°–450°F UNINSULATED	X	X	X	X	X	X	X	X	X
60°–119°F	X	X	X	X	X	X	X	X	X
– PIPING MATERIALS –									
STEEL	X	X	X	X	X	X		X	X
COPPER		X		X	X				X
PLASTIC	X	X		X	X			X	X
CAST IRON	X	X		X	X		X	X	X

NO.	DATE	BY	REVISION

NOTICE
0 ½ 1
IF THIS BAR DOES NOT MEASURE 1" THEN DRAWING IS NOT TO SCALE

WJS DESIGNED
SMB DRAWN
TRB CHECKED

REGISTERED PROFESSIONAL ENGINEER
DocuSigned by: 4BD4F76B55FC46E
9/2/2022
OREGON
PRESTON VAN METER
EXPIRES : 6/30/2024

WEST YOST
Water. Engineered.

Sweet Home Oregon at its best!

MAHLER WATER RECLAMATION FACILITY IMPROVEMENTS PROJECT PHASE 1

MECHANICAL DETAILS 1

PROJECT NO.: 936-50-21-09 | SCALE: AS SHOWN | DATE: AUGUST 2022

SHEET M-001

P:\Clients\936 City Of Sweet Home\50-21-09 WWTP Phase 1 Final Design\CAD\Production\93650-2109-M-001.dwg M-001 8/1/2022 12:34 PM SBARBER 23.1s (LMS Tech)

DocuSign Envelope ID: 09934EE9-0C55-40A3-8631-9C0AF6797111

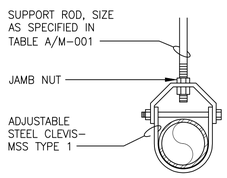

TYPE 1 PIPE HANGER
1/2" THROUGH 12" PIPE

DETAIL 1/VAR

NOT TO SCALE

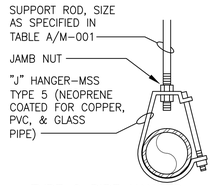

TYPE 2 PIPE HANGER
1/2" THROUGH 8" PIPE

DETAIL 2/VAR

NOT TO SCALE

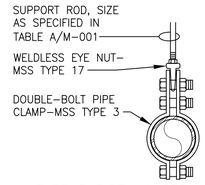

TYPE 3 PIPE HANGER
3/4" THROUGH 12" PIPE

DETAIL 3/VAR

NOT TO SCALE

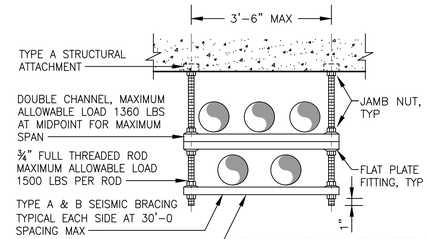

NOTES:
1. PIPING SPAN SHALL BE AS SPECIFIED IN TABLE A/M0001. SEE NOTE 2, TABLE A/M-001.
2. MAXIMUM DESIGN WEIGHT SHALL BE AS FOLLOWS; 3/8" TO 1 1/4" PIPE-100% OF DESIGN WEIGHT, TABLE A/M-001. 1/2" TO 12" PIPE-50% OF DESIGN WEIGHT, TABLE A/M-001.
3. TOTAL LOADS ON END CONNECTIONS SHALL NOT EXCEED 1/2 THE MAXIMUM ALLOWABLE LOAD AT MID-POINT.
4. VERTICAL SPACING SHALL BE AS REQUIRED.

TYPE 20 TYPICAL TRAPEZE PIPE HANGER

DETAIL 14/VAR

NOT TO SCALE

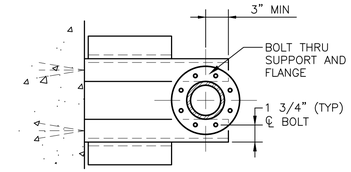

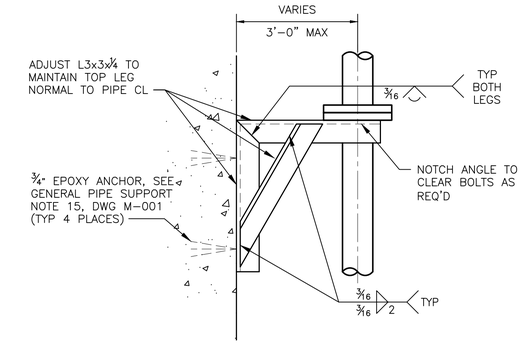

PIPE SUPPORT

DETAIL 17/VAR

NOT TO SCALE

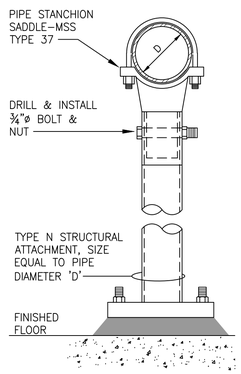

TYPE 10 PIPE HANGER
4" THROUGH 12" PIPE

DETAIL 10/VAR

NOT TO SCALE

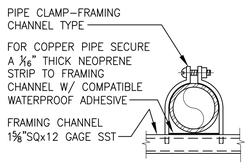

TYPE 6 PIPE HANGER
3/8" THROUGH 8" PIPE

DETAIL 6/VAR

NOT TO SCALE

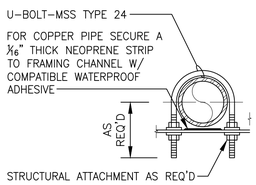

TYPE 7 PIPE HANGER
1/2" THROUGH 12" PIPE

DETAIL 7/VAR

NOT TO SCALE

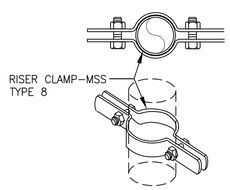

TYPE 12 PIPE HANGER
1/2" THROUGH 12" PIPE

DETAIL 12/VAR

NOT TO SCALE

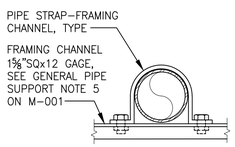

TYPE 13 PIPE HANGER
1/2" THROUGH 6" PIPE

DETAIL 13/VAR

NOT TO SCALE

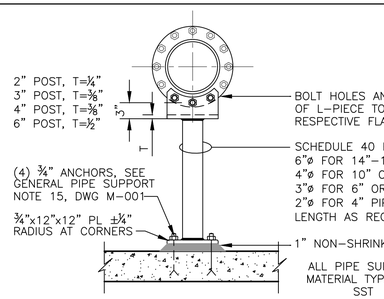

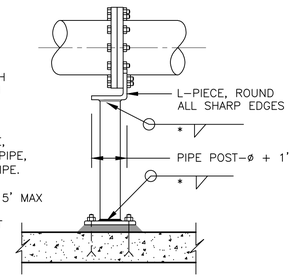

FLANGE MOUNTED PIPE SUPPORT

DETAIL 15/VAR

NOT TO SCALE

*NOTE:
WELD SIZE 1/4" FOR 2" - 4" POST; 3/8" FOR 6" POST.

ADJUSTABLE PIPE SADDLE SUPPORT SCHEDULE DIMENSIONS IN INCHES					
SIZE OF SUPPORTED PIPE	PIPE SIZE "A"	PIPE SIZE "B"	"C"	"D" MINIMUM	"D" MAXIMUM
* 2 1/2	2 1/2	1 1/2	12	8	13
3	2 1/2	1 1/2	12	8 1/2	13 1/2
3 1/2	2 1/2	1 1/2	12	8 1/2	13 1/2
4	3	2 1/2	12	9 1/2	14
6	3	2 1/2	12	10 1/2	15 1/2
8	3	2 1/2	12	11 1/2	16 1/2
10	3	2 1/2	12	13 1/2	18 1/2
12	3	2 1/2	12	15	19 1/2

* USE 2 1/2" SUPPORTS FOR PIPES LESS THAN 2 1/2" DIAMETER

NOTE:
1. FOR CONNECTION TO STEEL DECK, WELD ALL AROUND WITH 1/4" FILLET.

APPROXIMATE SIZES FOR STANCHION								
NPS OF PIPING (INCHES)	2 1/2	3	4	6	8	10	12	14
NPS OF PIPE FORMING LEG (IN)	1 1/2	2	3	4	6	8	8	10

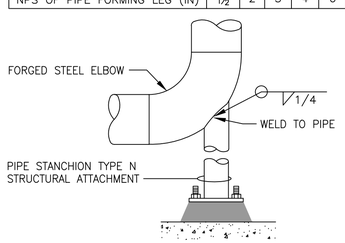

TYPE 9 PIPE HANGER
2-1/2" THROUGH 14" PIPE

DETAIL 9/VAR

NOT TO SCALE

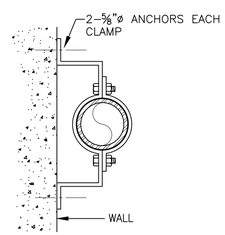

TYPE 11 PIPE HANGER
3/4" THROUGH 8" PIPE

DETAIL 11/VAR

NOT TO SCALE

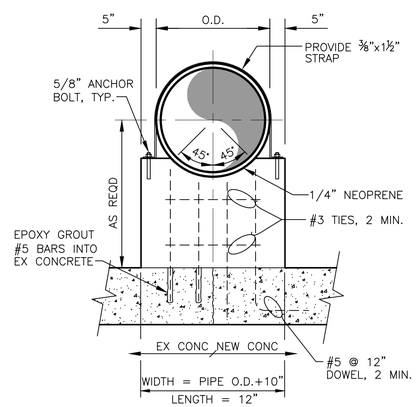

CONCRETE PIPE SUPPORT

DETAIL 16/VAR

NOT TO SCALE

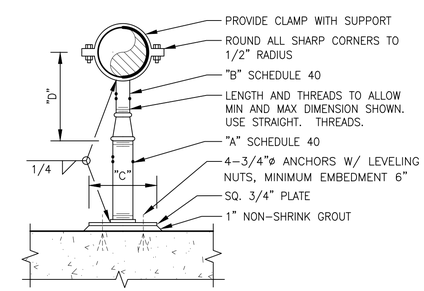

ADJUSTABLE PIPE SUPPORT

DETAIL 18/VAR

NOT TO SCALE

NO.	DATE	BY	REVISION

NOTICE
0 1/2 1
IF THIS BAR DOES NOT MEASURE 1" THEN DRAWING IS NOT TO SCALE

WJS DESIGNED
SMB DRAWN
TRB CHECKED

REGISTERED PROFESSIONAL ENGINEER
PRESTON VAN METER
OREGON
JAN. 02, 1999
8/2/2022
EXPIRES : 6/30/2024

WEST YOST
Water. Engineered.

Sweet Home Oregon at its best!

MAHLER WATER RECLAMATION FACILITY IMPROVEMENTS PROJECT PHASE 1

MECHANICAL DETAILS 2

PROJECT NO.: 936-50-21-09 | SCALE: AS SHOWN | DATE: AUGUST 2022

SHEET
M-002
60 of 135

P:\Clients\936 City Of Sweet Home\50-21-09 WWTP Phase 1 Final Design\CAD\Production\93650-2109-M-002.dwg M-002 8/1/2022 12:46 PM SBARBER 23.1s (LMS Tech)

DocuSign Envelope ID: 09934EE9-0C55-40A3-8631-9C0AF6797111

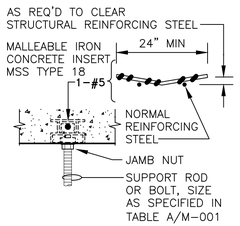

MAXIMUM ALLOWABLE LOAD:

ROD SIZE	LOAD
⅜"	610 LBS
½"	1130 LBS
⅝"–⅞"	1140 LBS

SPACING SHALL BE AS REQUIRED, BUT SHALL NOT EXCEED THOSE SPANS SHOWN IN TABLE A/M-001

TYPE A STRUCTURAL ATTACHMENT

DETAIL 1 VAR

NOT TO SCALE

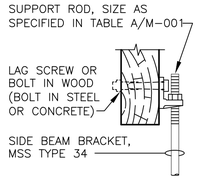

MAXIMUM ALLOWABLE LOAD:

ROD SIZE	LOAD WOOD	LOAD CONCRETE/STEEL
⅜"	390 LBS	610 LBS
½"	640 LBS	1130 LBS
⅝"	760 LBS	1810 LBS
¾"	830 LBS	2710 LBS
⅞"	830 LBS	3770 LBS

SPACING SHALL BE AS REQUIRED, BUT SHALL NOT EXCEED THOSE SPANS SHOWN IN TABLE A/M-001

TYPE B STRUCTURAL ATTACHMENT

DETAIL 2 VAR

NOT TO SCALE

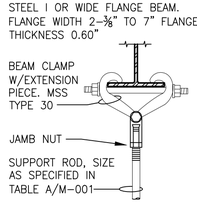

MAXIMUM ALLOWABLE LOAD:

ROD SIZE	LOAD
⅜"	610 LBS
½"	1130 LBS
⅝"–⅞"	1140 LBS

SPACING SHALL BE AS REQUIRED, BUT SHALL NOT EXCEED THOSE SPANS SHOWN IN TABLE A/M-001

TYPE C STRUCTURAL ATTACHMENT

DETAIL 3 VAR

NOT TO SCALE

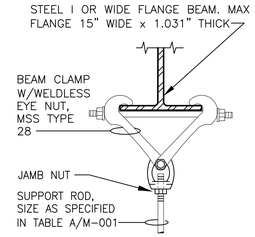

MAXIMUM ALLOWABLE LOAD:

ROD SIZE	LOAD
⅜"	610 LBS
½"	1130 LBS
⅝"	1810 LBS
¾"	2710 LBS
⅞"	3770 LBS

SPACING SHALL BE AS REQUIRED, BUT SHALL NOT EXCEED THOSE SPANS SHOWN IN TABLE A/M-001

TYPE D STRUCTURAL ATTACHMENT

DETAIL 4 VAR

NOT TO SCALE

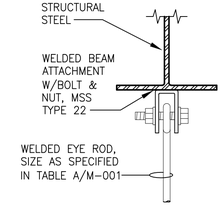

MAXIMUM ALLOWABLE LOAD:

ROD SIZE	LOAD
⅜"	610 LBS
½"	1130 LBS
⅝"	1810 LBS
¾"	2710 LBS
⅞"	3770 LBS
1"	4960 LBS
1¼"	8000 LBS

SPACING SHALL BE AS REQUIRED, BUT SHALL NOT EXCEED THOSE SPANS SHOWN IN TABLE A/M-001

TYPE F STRUCTURAL ATTACHMENT

DETAIL 5 VAR

NOT TO SCALE

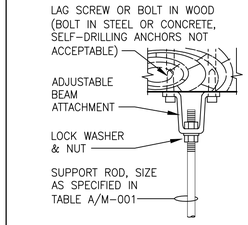

MAXIMUM ALLOWABLE LOAD:

ROD SIZE	LOAD WOOD	LOAD CONCRETE/STEEL
⅜"	425 LBS	610 LBS
½"	715 LBS	1130 LBS
⅝"	810 LBS	1810 LBS
¾"	1500 LBS	2710 LBS
⅞"	1650 LBS	3770 LBS

SPACING SHALL BE AS REQUIRED, BUT SHALL NOT EXCEED THOSE SPANS SHOWN IN TABLE A/M-001

TYPE J STRUCTURAL ATTACHMENT

DETAIL 6 VAR

NOT TO SCALE

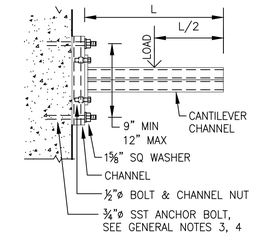

BRACKET MAY BE USED WITH VARIOUS HANGER, ROLLER, GUIDE & CLAMP ASSEMBLIES

CAPACITY AT MID-POINT:

LENGTH	LOAD
12"	2000 LBS
18"	1300 LBS
24"	1000 LBS
30"	800 LBS
36"	650 LBS

SPACING SHALL BE AS REQUIRED, BUT SHALL NOT EXCEED THOSE SPANS SHOWN IN TABLE A/M-001

TYPE K STRUCTURAL ATTACHMENT

DETAIL 7 VAR

NOT TO SCALE

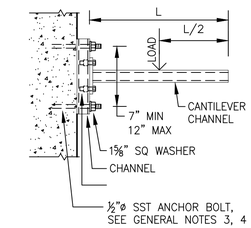

BRACKET MAY BE INSTALLED AS SHOWN OR INVERTED, & USED WITH VARIOUS HANGER, ROLLER, GUIDE & CLAMP ASSEMBLIES

CAPACITY AT MID-POINT:

LENGTH	LOAD
6"	1800 LBS
12"	1000 LBS
18"	700 LBS
24"	500 LBS

SPACING SHALL BE AS REQUIRED, BUT SHALL NOT EXCEED THOSE SPANS SHOWN IN TABLE A/M-001

TYPE L STRUCTURAL ATTACHMENT

DETAIL 8 VAR

NOT TO SCALE

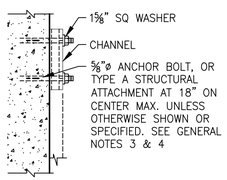

NOTES:

1. EPOXY ANCHORS MAY BE USED IN-LIEU OF EXPANSION ANCHORS WHERE THE ATTACHMENT IS NOT IN TENSION.
2. WHEN THE ATTACHMENTS ARE PLACED IN TENSION, SUCH AS ON A CEILING, A TYPE "A" ON SHEET M-003 STRUCTURAL ATTACHMENT OR A CAST IN ANCHOR BOLT SHALL BE USED.
3. BRACKET MAY BE WALL OR CEILING MOUNTED, AND MAY BE USED WITH VARIOUS HANGER, GUIDE, RACK, OR ANCHOR AND SWAY BRACE ASSEMBLIES.
4. MAXIMUM LOAD CAPACITY SHALL BE AS RECOMMENDED BY THE CHANNEL MANUFACTURER.
5. SPACING SHALL BE AS REQUIRED, BUT SHALL NOT EXCEED THOSE SPANS SHOWN IN TABLE A/M-001.

TYPE M STRUCTURAL ATTACHMENT

DETAIL 9 VAR

NOT TO SCALE

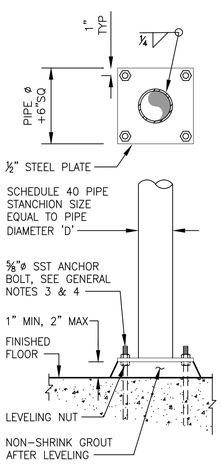

SPACING SHALL BE AS REQUIRED, BUT SHALL NOT EXCEED THOSE SPANS SHOWN IN TABLE A/M-001.

TYPE N STRUCTURAL ATTACHMENT

DETAIL 10 VAR

NOT TO SCALE

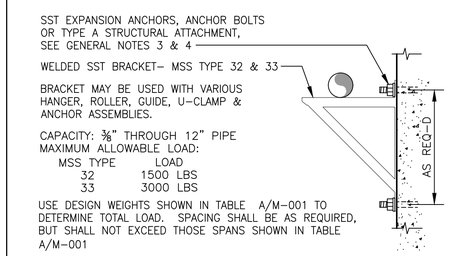

BRACKET MAY BE USED WITH VARIOUS HANGER, ROLLER, GUIDE, U-CLAMP & ANCHOR ASSEMBLIES.

CAPACITY: ⅜" THROUGH 12" PIPE
MAXIMUM ALLOWABLE LOAD:

MSS TYPE	LOAD
32	1500 LBS
33	3000 LBS

USE DESIGN WEIGHTS SHOWN IN TABLE A/M-001 TO DETERMINE TOTAL LOAD. SPACING SHALL BE AS REQUIRED, BUT SHALL NOT EXCEED THOSE SPANS SHOWN IN TABLE A/M-001

TYPE G STRUCTURAL ATTACHMENT

DETAIL 11 VAR

NOT TO SCALE

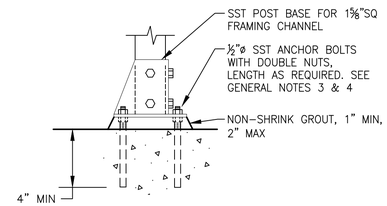

TYPE E STRUCTURAL ATTACHMENT

DETAIL 12 VAR

NOT TO SCALE

GENERAL NOTES:

1. NOT ALL PIPE ATTACHMENTS ARE USED IN THESE CONTRACT DRAWINGS.
2. SEE GENERAL PIPE SUPPORT NOTES ON DRAWING M-001.
3. ALL ATTACHMENTS, HANGERS, AND SUPPORTS SHALL BE TYPE 316 STAINLESS STEEL. ANCHOR BOLTS, BOLTS, NUTS, AND WASHERS SHALL BE TYPE 316 STAINLESS STEEL.
4. SEE GENERAL PIPE SUPPORT NOTE NOTE 15, DRAWING M-001.

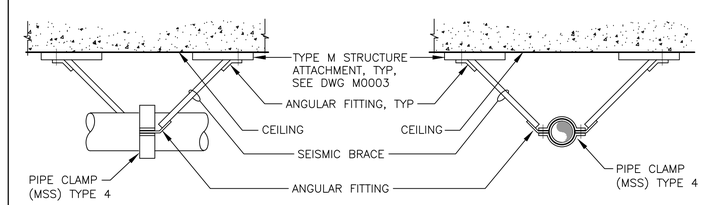

TYPE A SEISMIC LONGITUDINAL BRACING

TYPE A SEISMIC LATERAL BRACING

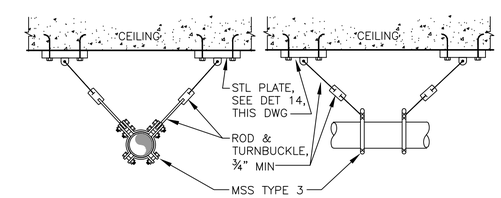

TYPE B SEISMIC LATERAL BRACING

TYPE B SEISMIC LONGITUDINAL BRACING

DETAIL 13 VAR

NOT TO SCALE

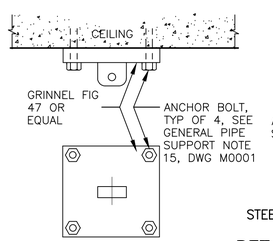

MAXIMUM ALLOWABLE LOAD:			
PLATE THICKNESS	ROD SIZE	BOLT SIZE	LOAD
¾"	1"	¾"	4960 LBS
1"	1¼"	⅞"	8000 LBS
1"	1½"	1"	11630 LBS

ATTACH ROD TO STEEL PLATE WITH STAINLESS STEEL CLEVIS. GRINNEL FIG. 299 OR EQUAL

STEEL PLATE

DETAIL 14 TYP

NOT TO SCALE

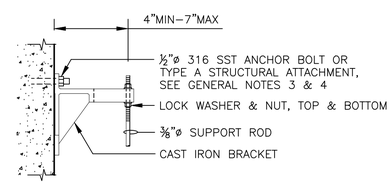

MAXIMUM ALLOWABLE LOAD: 180 LBS

SPACING SHALL BE AS REQUIRED, BUT SHALL NOT EXCEED THOSE SPANS SHOWN IN TABLE A/M-001

TYPE H STRUCTURAL ATTACHMENT

DETAIL 15 VAR

NOT TO SCALE

NO.	DATE	BY	REVISION

NOTICE

0 ½ 1

IF THIS BAR DOES NOT MEASURE 1" THEN DRAWING IS NOT TO SCALE

WJS DESIGNED

SMB DRAWN

TRB CHECKED

REGISTERED PROFESSIONAL ENGINEER — PRESTON VAN METER — 8/2/2022 — EXPIRES : 6/30/2024

WEST YOST Water. Engineered.

Sweet Home Oregon at its best!

MAHLER WATER RECLAMATION FACILITY IMPROVEMENTS PROJECT PHASE 1

MECHANICAL DETAILS 3

PROJECT NO.: 936-50-21-09 | SCALE: AS SHOWN | DATE: AUGUST 2022

SHEET M-003

61 of 135

P:\Clients\936 City Of Sweet Home\50-21-09 WWTP Phase 1 Final Design\CAD\Production\93650-2109-M-003.dwg M-003 8/1/2022 12:58 PM SBARBER 23.1s (LMS Tech)

DocuSign Envelope ID: 09934EE9-0C55-40A3-8631-9C0AF6797111

PIPE PENETRATION TYPES

	CONDITION		TYPE		
	FROM	TO	STEEL PIPE	CAST AND/OR DUCTILE IRON	PLASTIC PIPE
1	TANK	TANK BELOW WS	3, 6, OR 11	3, 10, 2, OR 8	3
2	TANK	TANK ABOVE WS	1 OR 3	1 OR 3	1 OR 3
3	PASSAGE	TANK BELOW WS	11	10, 2, OR 8	3
4	PASSAGE	TANK ABOVE WS	1, 3, OR 7	1, 3, OR 7	1, 3, OR 7
5	PASSAGE	PASSAGE	5 OR 7 SEE NOTE 6	5 OR 7 SEE NOTE 6	5 OR 7 SEE NOTE 6, 20
6	PASSAGE	OUTSIDE WALL	1 OR 3	1, 3 OR 10	1 OR 3 SEE NOTE 20
7	PASSAGE	ROOF	AS SHOWN		
8	TANK	OUTSIDE WALL	8 OR 11	10 OR 8	1 OR 3

MODULAR MECHANICAL EXPANDING NITRILE RUBBER SEAL WITH BOLTS, NUTS, & PRESSURE PLATE

NOTES:
1. SLEEVE DIAMETER SHALL BE AS RECOMMENDED BY THE MECHANICAL SEAL MANUFACTURER.
2. SLEEVE NOT REQUIRED FOR PENETRATION IN EXISTING WALLS

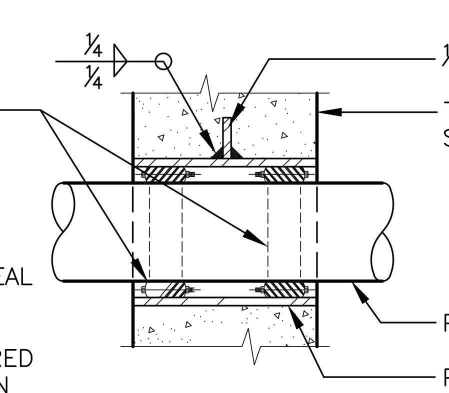

FOR WALLS
TYPE 1 PIPE PENETRATION (DOUBLE LINK SEAL)

DETAIL 1/VAR
NOT TO SCALE

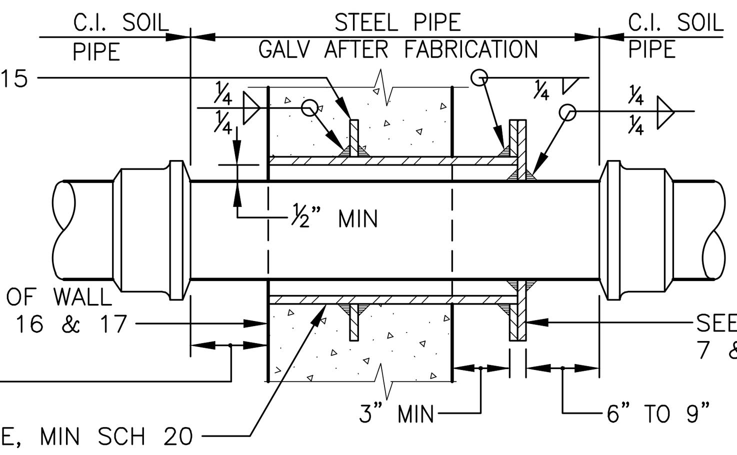

FOR WALLS, FLOORS & CEILINGS
TYPE 2 PIPE PENETRATION

DETAIL 2/VAR
NOT TO SCALE

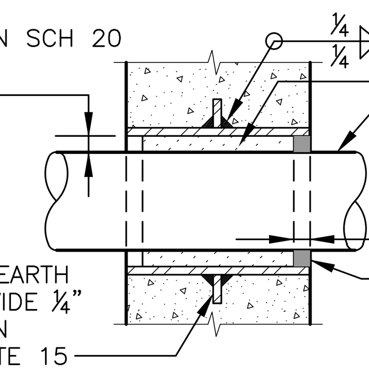

FOR WALLS
TYPE 3 PIPE PENETRATION

DETAIL 3/VAR
NOT TO SCALE

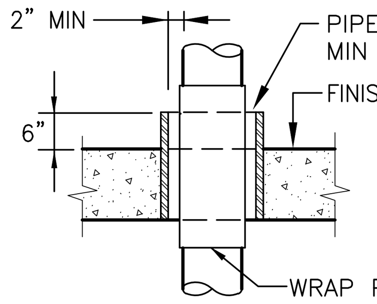

FOR FLOORS
TYPE 4 PIPE PENETRATION

DETAIL 4/VAR
NOT TO SCALE

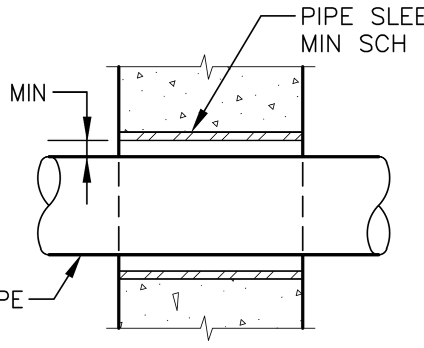

FOR WALLS
TYPE 5 PIPE PENETRATION

DETAIL 5/VAR
NOT TO SCALE

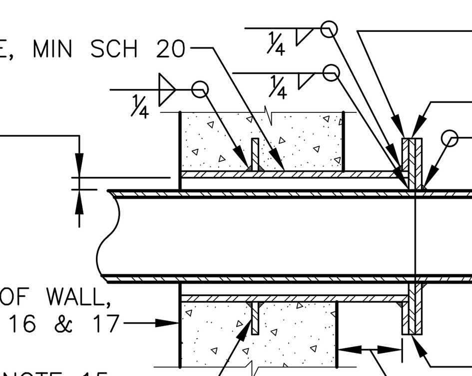

FOR WALLS, FLOORS & CEILINGS
TYPE 6 PIPE PENETRATION

DETAIL 6/VAR
NOT TO SCALE

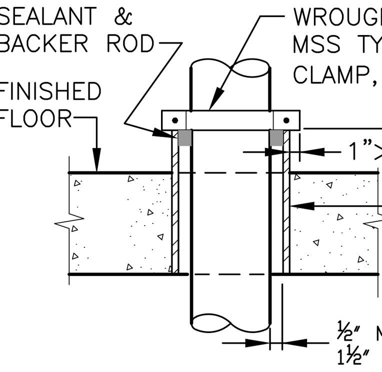

FOR FLOORS & CEILINGS
TYPE 7 PIPE PENETRATION

DETAIL 7/VAR
NOT TO SCALE

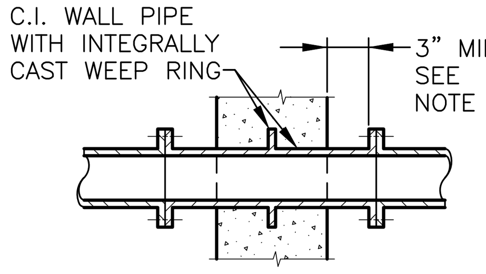

FOR WALLS
TYPE 8 PIPE PENETRATION

DETAIL 8/VAR
NOT TO SCALE

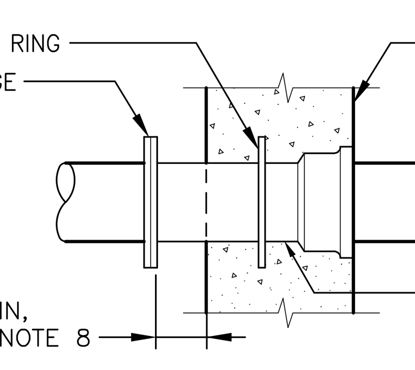

FOR WALLS
TYPE 10 PIPE PENETRATION

DETAIL 10/VAR
NOT TO SCALE

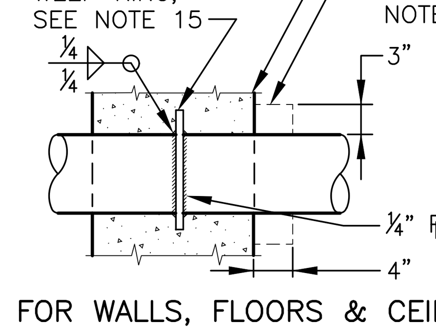

FOR WALLS, FLOORS & CEILINGS
TYPE 11 PIPE PENETRATION

DETAIL 11/VAR
NOT TO SCALE

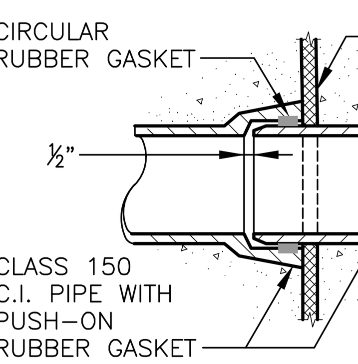

FLEXIBLE JOINT ON DRAINAGE LINES AT STRUCTURAL JOINTS

DETAIL 12/VAR
NOT TO SCALE

1. WHERE PIPES PASS THROUGH WALLS, FLOORS OR CEILINGS, PENETRATIONS SHALL CONFORM TO TABLE EXCEPT AS OTHERWISE INDICATED.
2. IN TABLE, "TANK" SHALL MEAN ANY PART OF A STRUCTURE CONTAINING LIQUID OR IN CONTACT WITH THE EARTH.
3. IN TABLE, "PASSAGE" SHALL MEAN ROOM, GALLERY, TUNNEL OR SIMILAR ENCLOSURE.
4. IN TABLE, WATER SURFACE "WS" SHALL MEAN AN ELEVATION 9" ABOVE MAXIMUM WATER SURFACE SHOWN.
5. ALL STEEL SLEEVES SHALL BE HOT DIPPED GALVANIZED AFTER FABRICATION, UNLESS OTHERWISE INDICATED.
6. IN CONDITION 5, PENETRATION TYPES 2, 3, 6, 11, OR 13, SHALL BE USED WHERE ONE SIDE CONTAINS EXPLOSION PROOF EQUIPMENT, WHERE FLOODING IS POSSIBLE OR WHERE INDICATED.
7. SEAL FLANGES SHALL BE DRILLED TO 150 POUND STANDARD. EACH JOINT SHALL BE GASKETED.
8. WHERE SPECIFIED, CAST IRON FLANGES MAY BE INSTALLED FLUSH WITH WALL AND TAPPED FOR STUDS.
9. PROVIDE CURB WHERE PENETRATING FLOOR, EXCEPT FOR PENETRATION TYPES 4 AND 7. CURB SHALL BE 4" HIGH BY 3" WIDE.
10. PROVIDE MINIMUM 3" CLEARANCE BETWEEN REINFORCING STEEL AND FERROUS METAL PENETRATIONS.
11. FLEXIBLE JOINTS SHALL BE PROVIDED FOR UNDERGROUND PIPING AS SPECIFIED.
12. RESTRAINED FLEXIBLE COUPLINGS FOR STEEL PIPE SHALL BE DESIGNED FOR 150 PSI LINE PRESSURE IN ACCORDANCE WITH AWWA MANUAL MII.
13. INSULATION SHALL NOT EXTEND THROUGH SLEEVES, UNLESS OTHERWISE INDICATED.
14. WHERE CAST IRON PIPE IS EMBEDDED IN CONCRETE AT AN EXPANSION JOINT, USE TYPE 1.
15. WEEP RINGS SHALL HAVE A MINIMUM DIAMETER EQUAL TO THE PIPE OR PIPE SLEEVE OUTSIDE DIAMETER PLUS 3–INCHES.
16. "TANK SIDE OF WALL" SHALL MEAN SIDE OF WALL NORMALLY EXPOSED TO LIQUID, EARTH, OR OUTSIDE ATMOSPHERE.
17. SEAL WITH MASTIC SEALANT WHERE WALL IS EXPOSED TO LIQUID, EARTH, OR EXPLOSION HAZARD AREA.
18. NOT ALL WALL PENETRATIONS ARE USED IN THESE CONTRACT DRAWINGS.
19. WHERE PIPES PASS THROUGH FIRE RATED WALLS, FLOORS, OR CEILINGS, THE PENETRATIONS SHALL BE SEALED WITH A LISTED FIRESTOP ASSEMBLY EQUAL TO THE FIRE RATING OF THE WALL, FLOOR OR CEILING, WHETHER THE ASSEMBLY IS SHOWN AS A DETAIL OR NOT.
20. WHERE DOUBLE CONTAINMENT PIPE IS REQUIRED, THE OUTER CONTAINMENT PIPE SHALL EXTEND THROUGH THE WALL INTO THE CONTAINMENT AREA.

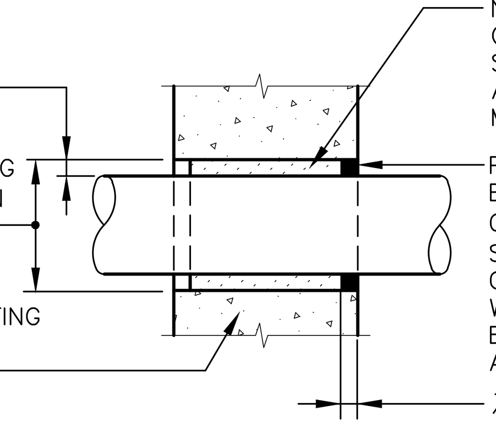

EXISTING WALL PIPE PENETRATION

DETAIL 13/VAR
NOT TO SCALE

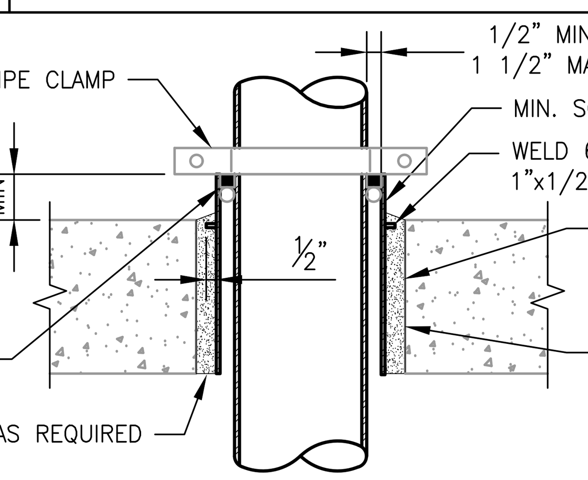

EXISTING FLOOR PENETRATION

DETAIL 14/VAR
NOT TO SCALE

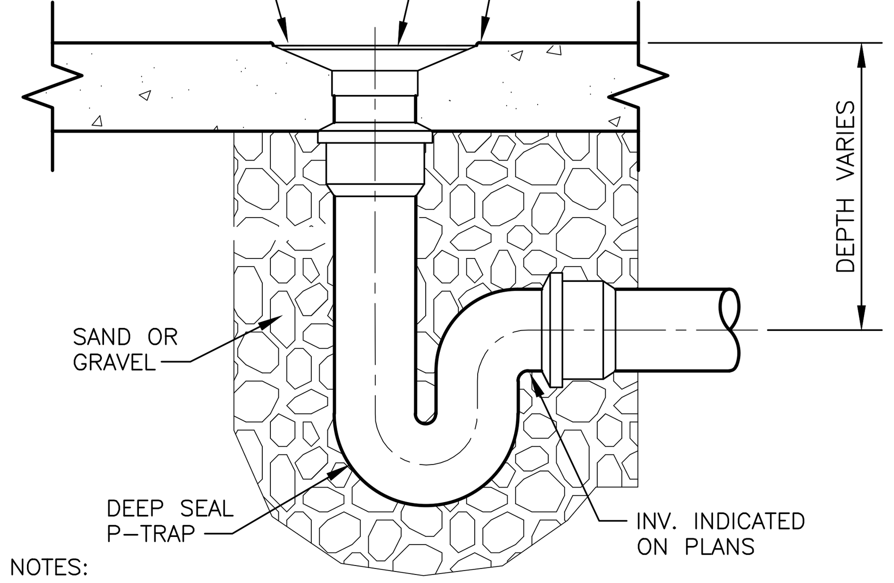

NOTES:
1. PROVIDE P–TRAPS ON ALL FLOOR DRAINS, EXCEPT WHERE NOTED.
2. SLOPE FLOOR 1% MIN. TO DRAIN.
3. TRAPS SHALL BE EQUIPPED WITH TRAP PRIMERS, WHERE INDICATED.

TYPE I FLOOR DRAIN

DETAIL 15/VAR
NOT TO SCALE

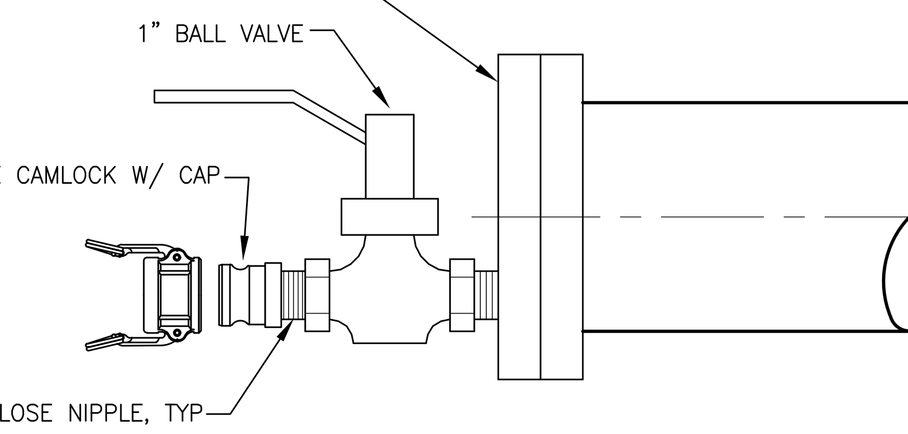

NOTES:
1. ALL COMPONENTS TYPE 316 STAINLESS STEEL.
2. BALL VALVE: STAINLESS STEEL, COMPLIANT WTIH MSS–110. APOLLO 76F SERIES, NIBCO T–585–56–R–66–LL, OR EQUAL.

FLUSHING CONNECTION

DETAIL 18/VAR
NOT TO SCALE

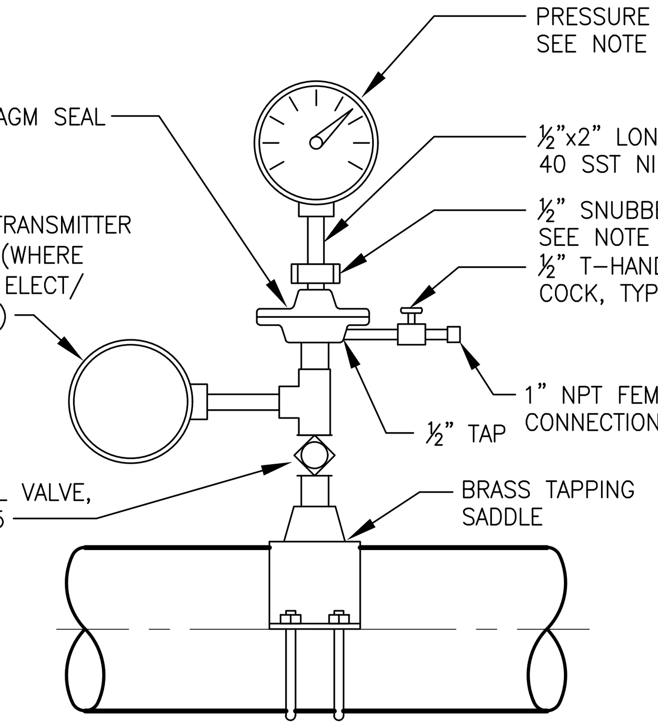

NOTES:
1. FOR GAUGE AND APPURTENANCES DETAILS, SEE SPEC. SECTION 15110.
2. USE BOSS FOR FABRICATED STEEL PIPE.
3. WHERE REQUIRED BY SCHEDULE IN SPEC SECTION 15110.
4. THIS DETAIL FOR LIQUID SERVICE ONLY, UNLESS OTHERWISE SPECIFIED.
5. IF NO PRESSURE SWITCH OR TRANSMITTER, BOSS, NIPPLE AND VALVE MAY BE 1/2".

PRESSURE GAUGE (CLEAN WATER LINES, UON)

DETAIL 16/VAR
NOT TO SCALE

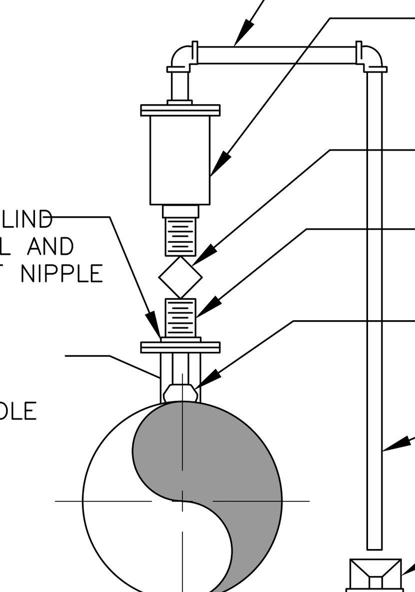

NOTES:
1. VALVE SIZE SHALL BE AS INDICATED ON PLANS. SEE SPECIFICATIONS FOR DUAL BODY COMBINATION AIR VALVES.
2. SERVICE TAP AND ECCENTRIC PLUG VALVE SHALL MATCH VALVE INLET SIZE.
3. WHERE CONDITIONS PERMIT OR AS SHOWN ON DRAWINGS, EXTEND PIPE THROUGH PUMP STATION DECK. DO NOT SUBMERGE END OF PIPE.
4. IF VALVE IS EQUIPPED WITH OTHER DRAIN OR DISCHARGE LINES, PIPE TO COMMON DISCHARGE AND INCREASE DISCHARGE PIPE BY SUM OF ALL CONTRIBUTING CONNECTIONS.

AIR VACUUM, AND AIR RELEASE (3" AND SMALLER)

DETAIL 17/VAR
NOT TO SCALE

NO.	DATE	BY	REVISION

NOTICE
0 ½ 1
IF THIS BAR DOES NOT MEASURE 1" THEN DRAWING IS NOT TO SCALE

WJS DESIGNED
SMB DRAWN
TRB CHECKED

REGISTERED PROFESSIONAL ENGINEER
DocuSigned by: 51615PE
4B04F76859FC46F...
8/2/2022
OREGON
JAN. 02, 1999
PRESTON VAN METER
EXPIRES : 6/30/2024

WEST YOST Water. Engineered.

Sweet Home Oregon at its best!

MAHLER WATER RECLAMATION FACILITY IMPROVEMENTS PROJECT PHASE 1

MECHANICAL DETAILS 4

PROJECT NO.: 936-50-21-09 | SCALE: AS SHOWN | DATE: AUGUST 2022

SHEET M-004

P:\Clients\936 City Of Sweet Home\50-21-09 WWTP Phase 1 Final Design\CAD\Production\93650-2109-M-004.dwg M-004 7/27/2022 8:40 AM SBARBER 23.1s (LMS Tech)

DocuSign Envelope ID: 09934EE9-0C55-40A3-8631-9C0AF6797111

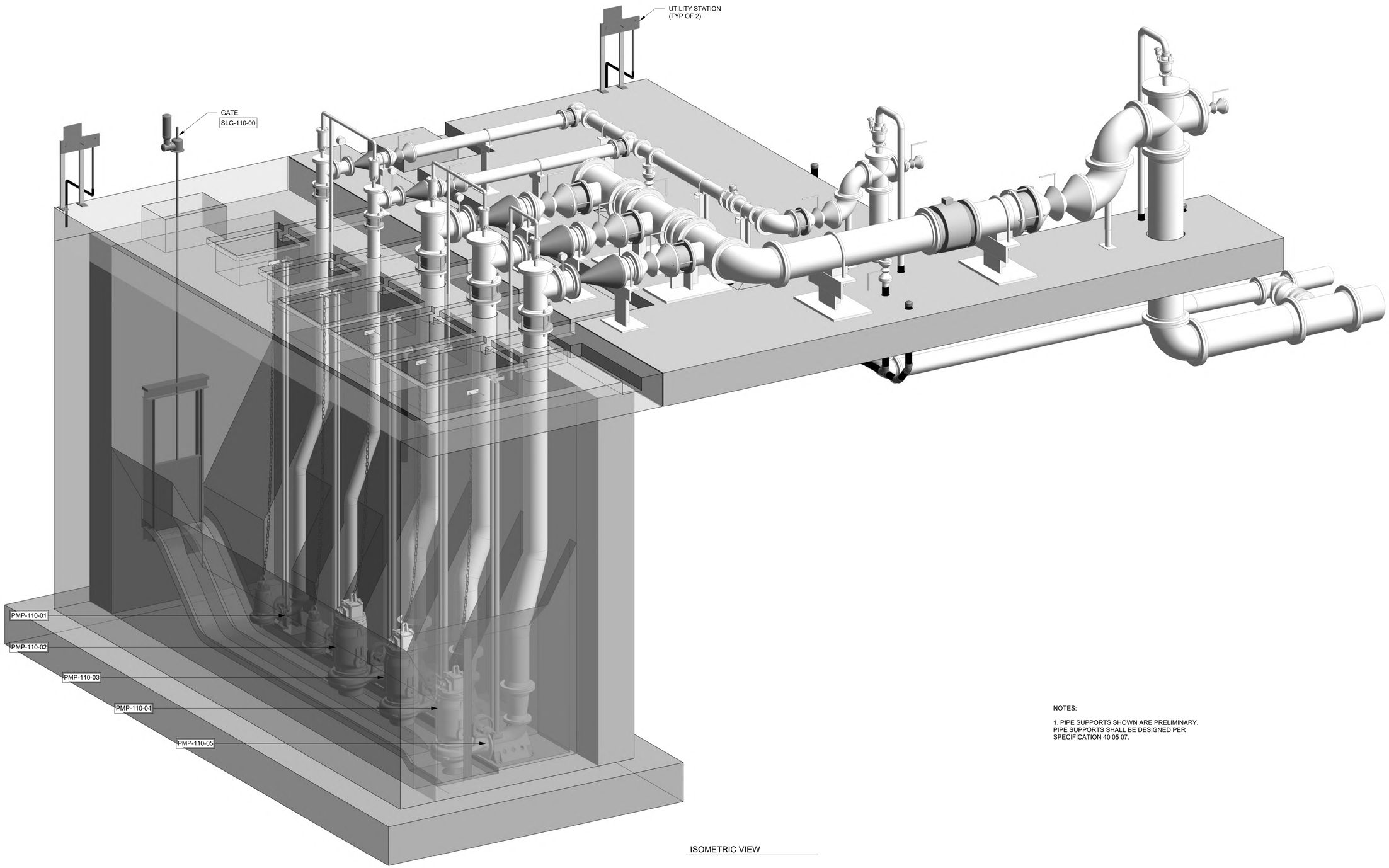

ISOMETRIC VIEW

NOTES:

1. PIPE SUPPORTS SHOWN ARE PRELIMINARY. PIPE SUPPORTS SHALL BE DESIGNED PER SPECIFICATION 40 05 07.

NO.	DATE	BY	REVISION

NOTICE

0 1/2 1

IF THIS BAR DOES NOT MEASURE 1" THEN DRAWING IS NOT TO SCALE

NED
DESIGNED
RD
DRAWN
TRB/PLVM
CHECKED

REGISTERED PROFESSIONAL ENGINEER
DocuSigned by:
8/2/2022
PRESTON VAN METER
EXPIRES : 6/30/2024

WEST YOST
Water. Engineered.

Sweet Home
Oregon at its best!

MAHLER WATER RECLAMATION FACILITY IMPROVEMENTS PROJECT PHASE 1

ISOMETRIC VIEW

PROJECT NO.: 936-50-21-09 | SCALE | DATE August 2022

SHEET
M-110
63 of 135

7/30/2022 9:57:58 AM Autodesk Docs://Sweet Home WWTP/IPS.rvt

DocuSign Envelope ID: 09934EE9-0C55-40A3-8631-9C0AF6797111

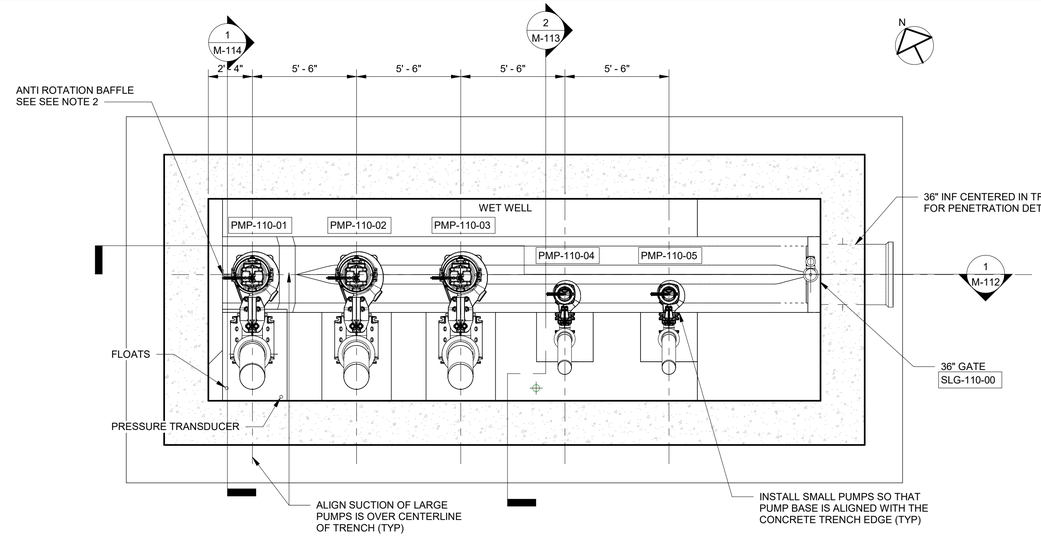

BOTTOM PLAN - PUMPS
1/4" = 1'-0"

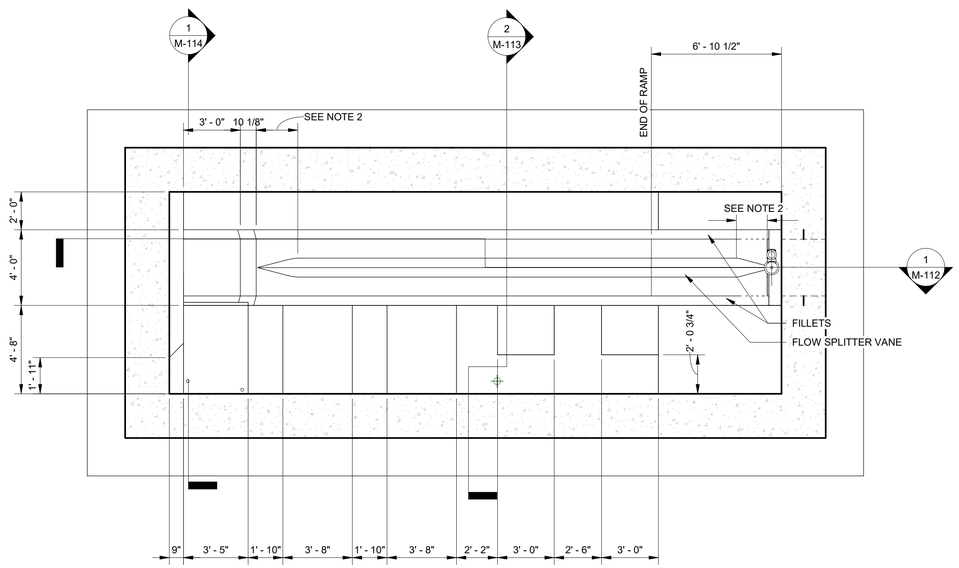

BOTTOM PLAN - TRENCH CONCRETE
1/4" = 1'-0"

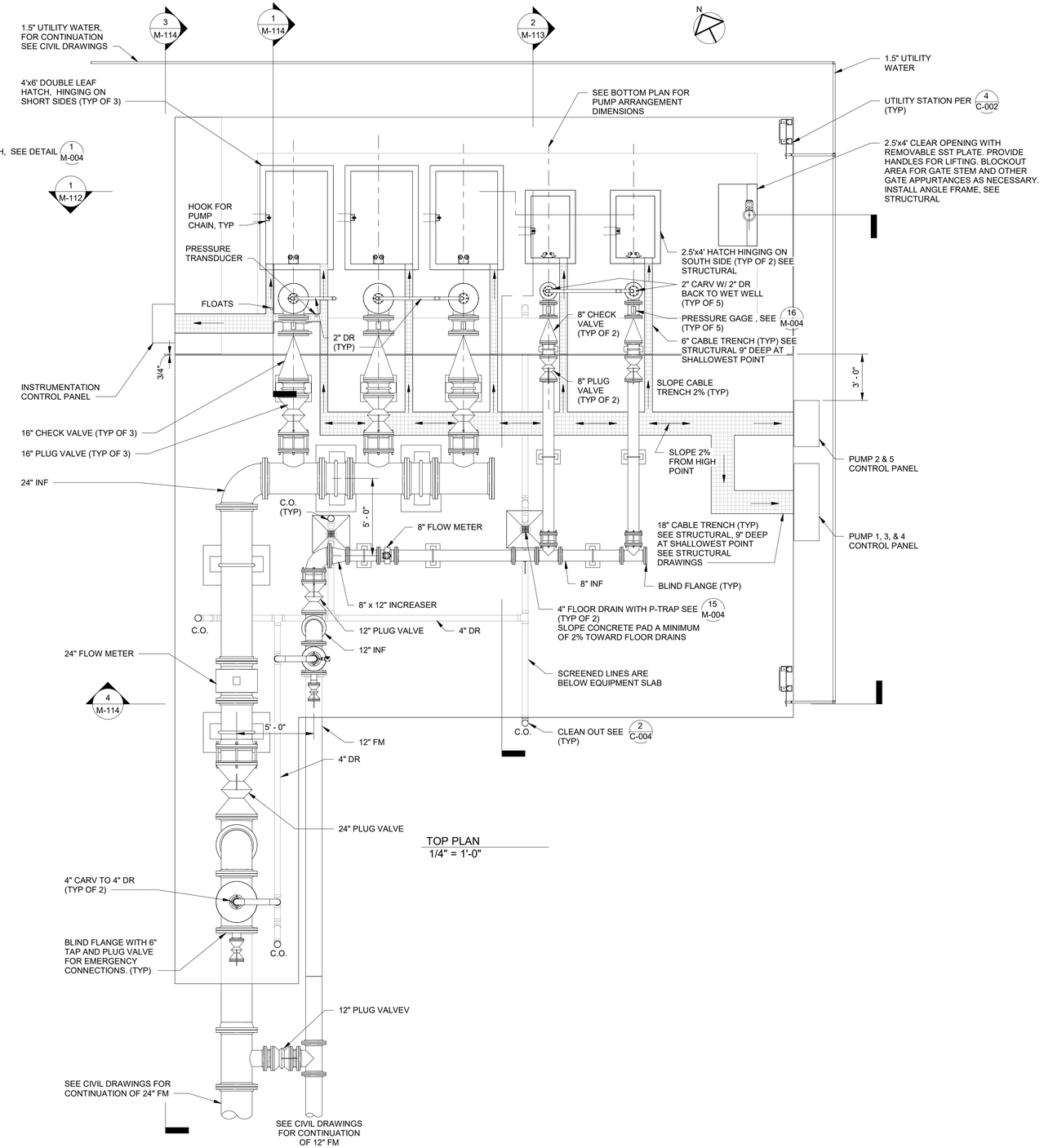

NOTES:

1. PIPE SUPPORTS SHOWN ARE PRELIMINARY. PIPE SUPPORTS SHALL BE DESIGNED PER SEPCIFICATION 40 05 07.

2. DIMENSIONS ARE ESTIMATED BASED ON AVAILABLE INFORMATION. WET WELL TRENCH DIMENSIONS SHALL BE COORDINATED WITH PUMP SUPPLIER AND BE IN ACCORDANCE WITH ANSI HI 9.8.6.

NO.	DATE	BY	REVISION

NOTICE
0 1/2 1
IF THIS BAR DOES NOT MEASURE 1" THEN DRAWING IS NOT TO SCALE

NED
DESIGNED
RD
DRAWN
TRB/PLVM
CHECKED

REGISTERED PROFESSIONAL ENGINEER
DocuSigned by:
8/2/2022
JAN. 02, 1999
PRESTON VAN METER
EXPIRES : 6/30/2024

WEST YOST
Water. Engineered.

Sweet Home Oregon at its best!

MAHLER WATER RECLAMATION FACILITY IMPROVEMENTS PROJECT PHASE 1

INFLUENT PUMP STATION PLANS

PROJECT NO.: 936-50-21-09 | SCALE 1/4" = 1'-0" | DATE August 2022

SHEET
M-111

7/30/2022 9:58:20 AM Autodesk Docs://Sweet Home WWTP/IPS.rvt

DocuSign Envelope ID: 09934EE9-0C55-40A3-8631-9C0AF6797111

NOTES:

1. PIPE SUPPORTS SHOWN ARE PRELIMINARY. PIPE SUPPORTS SHALL BE DESIGNED PER SPECIFICATION 40 05 07.

2. DIMENSIONS ARE ESTIMATED BASED ON AVAILABLE INFORMATION. WET WELL TRENCH DIMENSIONS SHALL BE COORDINATED WITH PUMP SUPPLIER AND BE IN ACCORDANCE WITH ANSI HI 9.8.6.

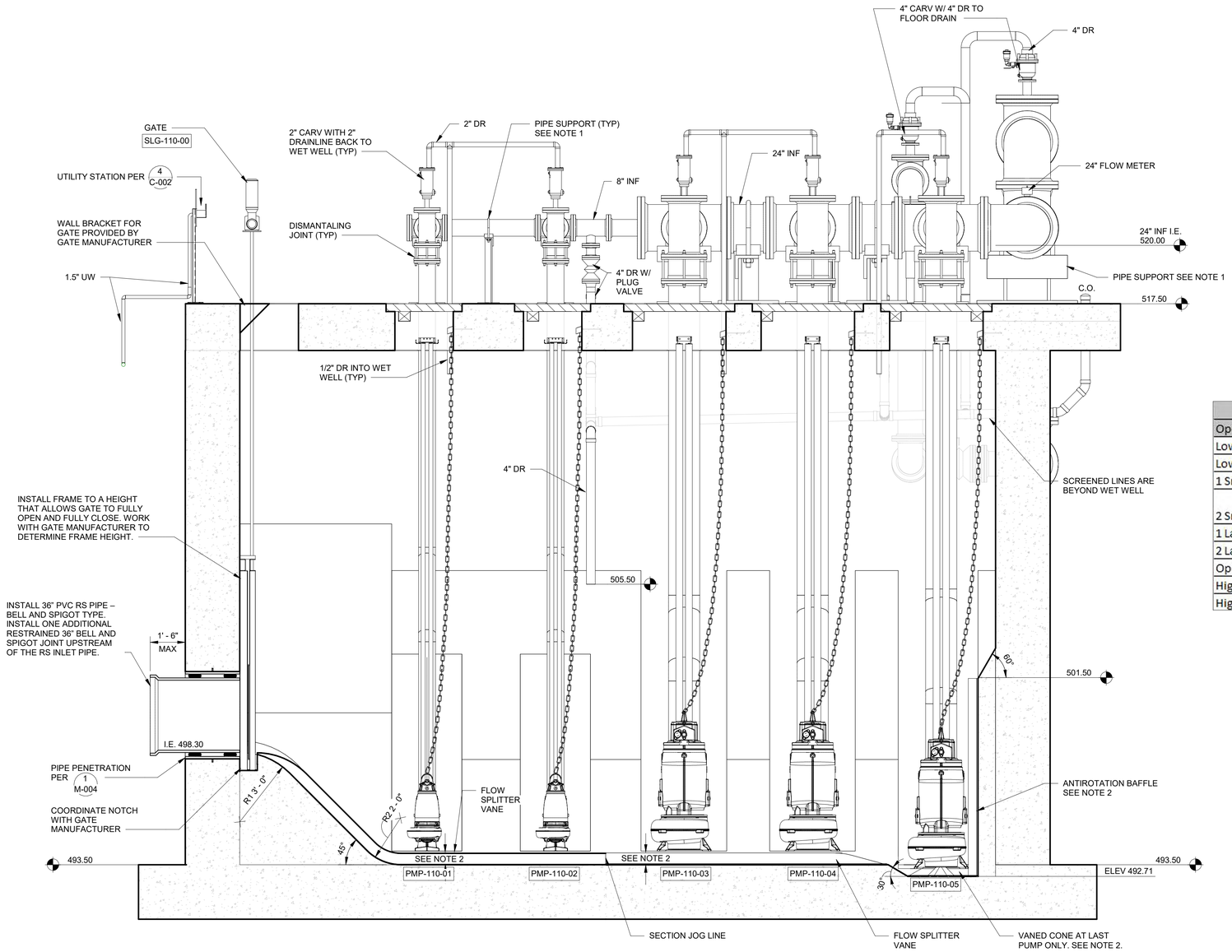

1 / M-111 SECTION
3/8" = 1'-0"

Water Surface Elevations			
Operating Condition/Alarm Level	Pumps On	Pumps Off	Alert/Alarm
Low-Low Level Alarm			496.25
Low Level Alarm			497.00
1 Small Pump On	498.50	498.00	
2 Small Pumps On	499.50	499.00, 500.00	
1 Large Pump On	500.00	499.50	
2 Large Pumps On	500.50	500.00	
Operator Alert			501.50
High Level Alarm			502.50
High-High Level Alarm			503.50

NO.	DATE	BY	REVISION

NOTICE
0 1/2 1
IF THIS BAR DOES NOT MEASURE 1" THEN DRAWING IS NOT TO SCALE

NED
DESIGNED
RD
DRAWN
TRB/PLVM
CHECKED

REGISTERED PROFESSIONAL ENGINEER
DocuSigned by:
8/2/2022
JAN. 02, 1999
PRESTON VAN METER
EXPIRES : 6/30/2024

WEST YOST
Water. Engineered.

Sweet Home Oregon at its best!

MAHLER WATER RECLAMATION FACILITY IMPROVEMENTS PROJECT PHASE 1

SECTIONS AND DETAILS 1

PROJECT NO.: 936-50-21-09 | SCALE 3/8" = 1'-0" | DATE August 2022

SHEET
M-112

7/30/2022 9:58:42 AM Autodesk Docs://Sweet Home WWTP/IPS.rvt

DocuSign Envelope ID: 09934EE9-0C55-40A3-8631-9C0AF6797111

NOTES:

1. PIPE SUPPORTS SHOWN ARE PRELIMINARY. PIPE SUPPORTS SHALL BE DESIGNED PER SPECIFICATION 40 05 07.

2. DIMENSIONS ARE ESTIMATED BASED ON AVAILABLE INFORMATION. WET WELL TRENCH DIMENSIONS SHALL BE COORDINATED WITH PUMP SUPPLIER AND BE IN ACCORDANCE WITH ANSI HI 9.8.6.

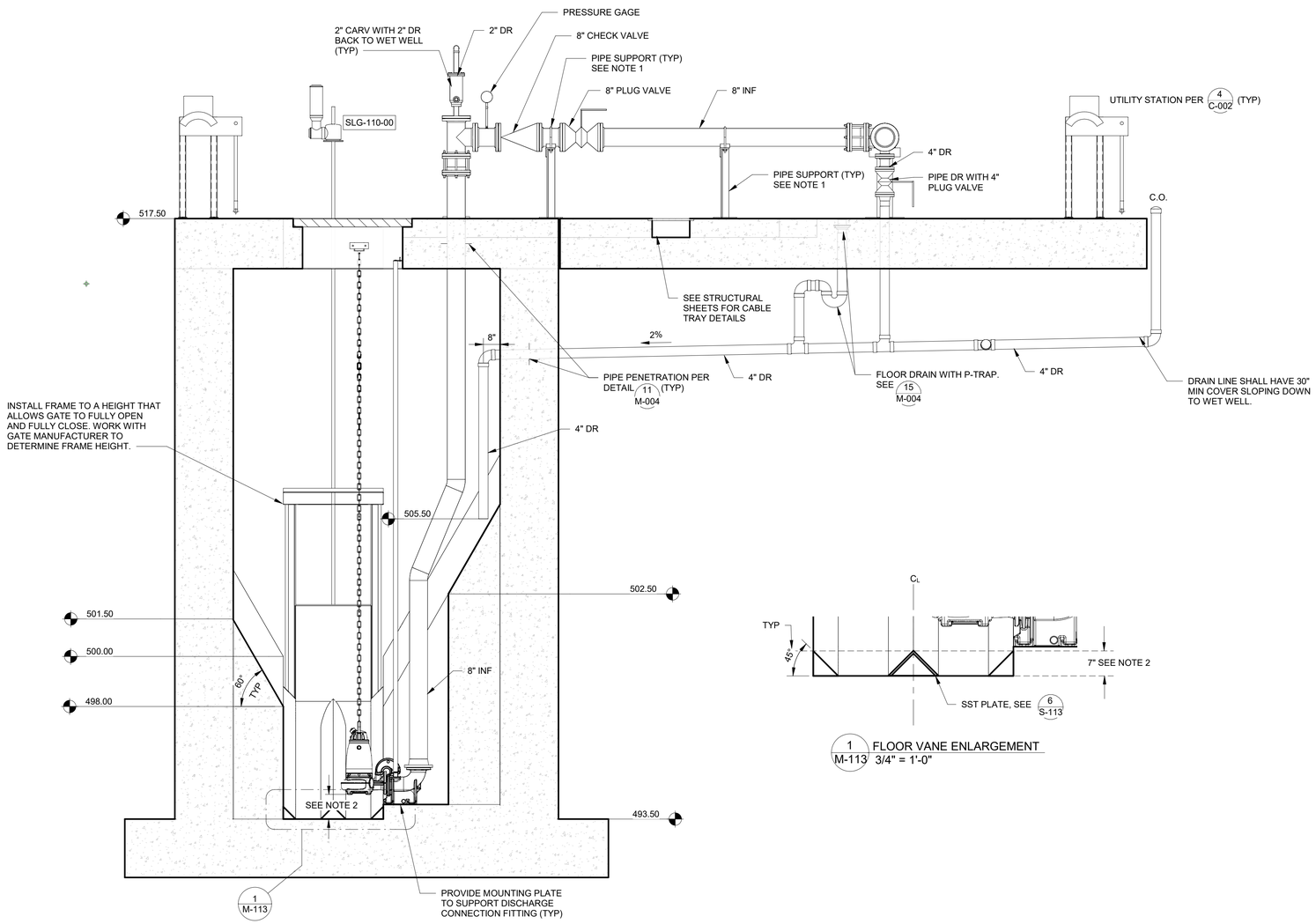

2 M-111 SECTION 3/8" = 1'-0"

1 M-113 FLOOR VANE ENLARGEMENT 3/4" = 1'-0"

NO.	DATE	BY	REVISION

NOTICE
0 1/2 1
IF THIS BAR DOES NOT MEASURE 1" THEN DRAWING IS NOT TO SCALE

NED DESIGNED
RD DRAWN
TRB/PLVM CHECKED

REGISTERED PROFESSIONAL ENGINEER DocuSigned by: 51413E2E2D 4B0AF7A859F C4EF 8/2/2022 JAN. 02, 1997 OREGON PRESTON VAN METER
EXPIRES : 6/30/2024

WEST YOST Water. Engineered.

Sweet Home Oregon at its best!

MAHLER WATER RECLAMATION FACILITY IMPROVEMENTS PROJECT PHASE 1

SECTIONS AND DETAILS 2

PROJECT NO.: 936-50-21-09 | SCALE As indicated | DATE August 2022

SHEET M-113

7/30/2022 9:59:06 AM Autodesk Docs://Sweet Home WWTP/IPS.rvt

DocuSign Envelope ID: 09934EE9-0C55-40A3-8631-9C0AF6797111

NOTES:

1. PIPE SUPPORTS SHOWN ARE PRELIMINARY. PIPE SUPPORTS SHALL BE DESIGNED PER SPECIFICATION 40 05 07.

2. DIMENSIONS ARE ESTIMATED BASED ON AVAILABLE INFORMATION. WET WELL TRENCH DIMENSIONS SHALL BE COORDINATED WITH PUMP SUPPLIER AND BE IN ACCORDANCE WITH ANSI HI 9.8.6.

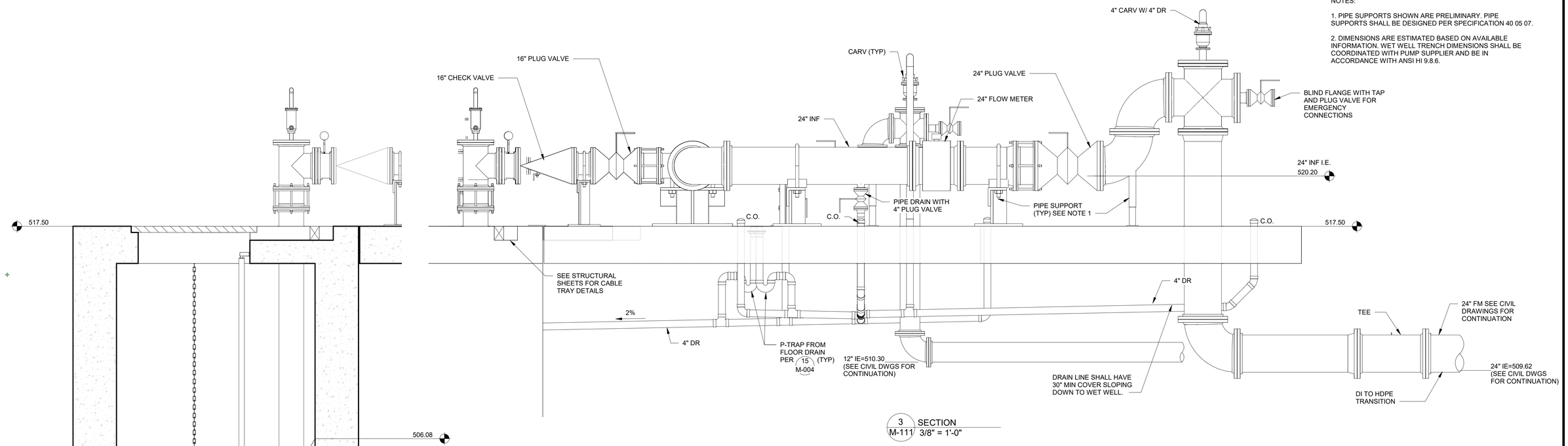

3 M-111 SECTION 3/8" = 1'-0"

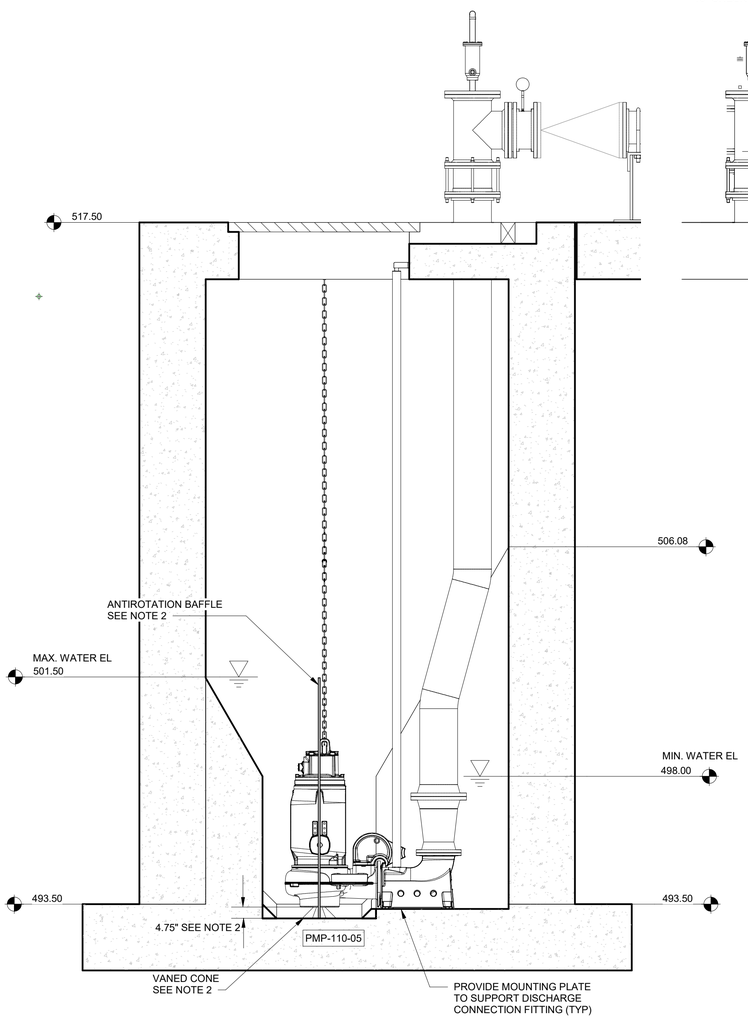

1 M-111 SECTION 3/8" = 1'-0"

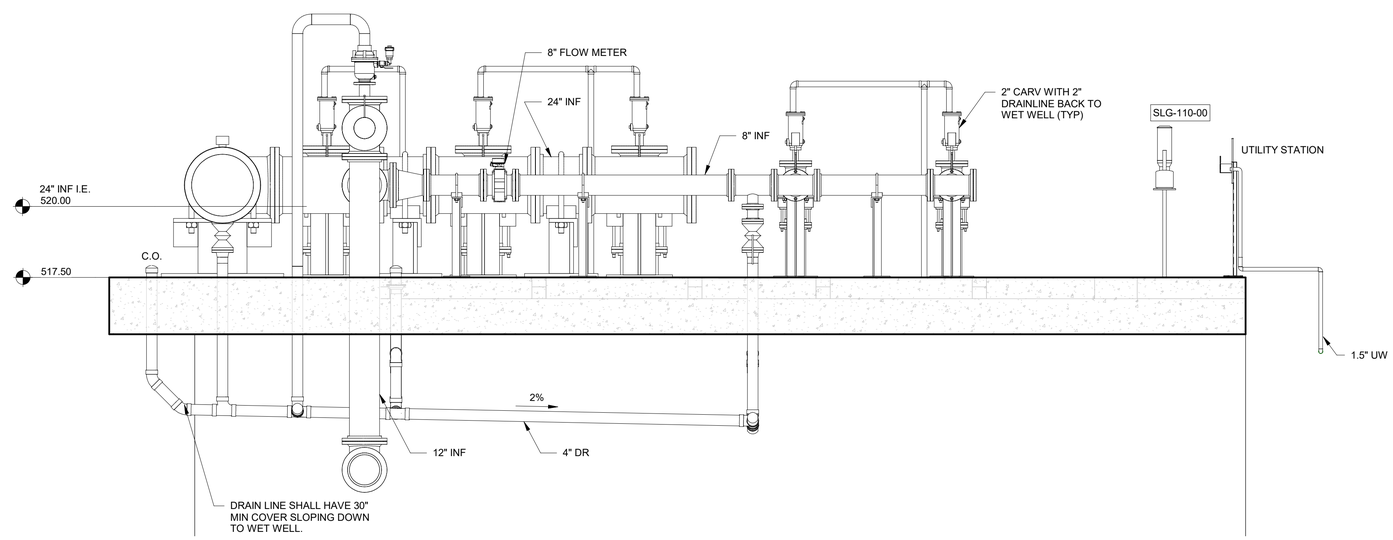

4 M-111 SECTION 3/8" = 1'-0"

NO.	DATE	BY	REVISION

NOTICE
0 1/2 1
IF THIS BAR DOES NOT MEASURE 1" THEN DRAWING IS NOT TO SCALE

NED DESIGNED
RD DRAWN
TRB/PLVM CHECKED

REGISTERED PROFESSIONAL ENGINEER PRESTON VAN METER JAN. 02, 1999 OREGON
DocuSigned by: 4B0AF7A8B9F C46F... 8/2/2022
EXPIRES : 6/30/2024

WEST YOST Water. Engineered.

Sweet Home Oregon at its best!

MAHLER WATER RECLAMATION FACILITY IMPROVEMENTS PROJECT PHASE 1

SECTIONS AND DETAILS 3

PROJECT NO.: 936-50-21-09 | SCALE 3/8" = 1'-0" | DATE August 2022

SHEET M-114

7/30/2022 9:59:11 AM Autodesk Docs://Sweet Home WWTP/IPS.rvt

DocuSign Envelope ID: 09934EE9-0C55-40A3-8631-9C0AF6797111

MECHANICAL SYMBOL LIST

Abbreviations

AFF	ABOVE FINISHED FLOOR
A/C	AIR CONDITION(ED)
BDD	BACKDRAFT DAMPER
BHP	BRAKE HORSEPOWER
CD	CONDENSATE DRAIN
CU	CONDENSING UNIT
CONT.	CONTINUATION
CFM	CUBIC FEET PER MINUTE
(X)	DEMOLISH
DIA	DIAMETER
DX	DIRECT EXPANSION
DB	DRY BULB
EFF	EFFICIENT
ELECT	ELECTRICAL
EER	ENERGY EFFICIENCY RATING
EAT	ENTERING AIR TEMPERATURE
EXH	EXHAUST
EF	EXHAUST FAN
F	FAHRENHEIT
FC	FAN COIL
HP	HORSEPOWER
KW	KILOWATT
MAX	MAXIMUM
MIN	MINIMUM
MD	MOTORIZED DAMPER
N/A	NOT APPLICABLE
NTS	NOT TO SCALE
OSA	OUTSIDE AIR
PH	PHASE
LBS.	POUNDS
PD	PRESSURE DROP
RL	REFRIGERANT LIQUID
RS	REFRIGERANT SUCTION
RA	RETURN AIR
RPM	REVOLUTIONS PER MINUTE
SEER	SEASONAL ENERGY EFFICIENCY RATING
SF	SQUARE FEET
SP	STATIC PRESSURE
T, TEMP	TEMPERATURE
MBH	THOUSAND BTU'S PER HOUR
V	VOLT
WC	WATER COLUMN
W	WATT
WB	WET BULB
W/	WITH

Control Symbols

T AC-1 — ROOM THERMOSTAT

Dampers

MOTORIZED DAMPER

VOLUME DAMPER

Diffusers and Grilles

12x12 / 100 CD-1 — DIFFUSER OR GRILLE IDENTIFICATION

SUPPLY AIR FLOW

Ductwork Fittings

ACOUSTICALLY LINED DUCT (SIZES SHOWN ARE NET INSIDE)

CONCENTRIC SQUARE TO ROUND

CONCENTRIC TRANSITION, RECTANGULAR OR ROUND

RECTANGULAR MAIN WITH RECTANGULAR BRANCH

RECTANGULAR MAIN WITH ROUND BRANCH

RECTANGULAR OFFSET LESS THAN 15%%d

RECTANGULAR OFFSET MORE THAN 15%%d

ROUND DUCT WITH ROUND BRANCH

ROUND WYE

MITERED ELBOW WITH TURNING VANES

RADIUSED ELBOW

General

CONTINUATION

X / X — DETAIL NUMBER AND SHEET LOCATION

XX-X LOCATION — EQUIPMENT IDENTIFICATION

30X16 — RECTANGULAR DUCT SIZING

30"Ø — ROUND DUCT SIZING

Piping Systems

RL — REFRIGERANT LIQUID

RS — REFRIGERANT SUCTION

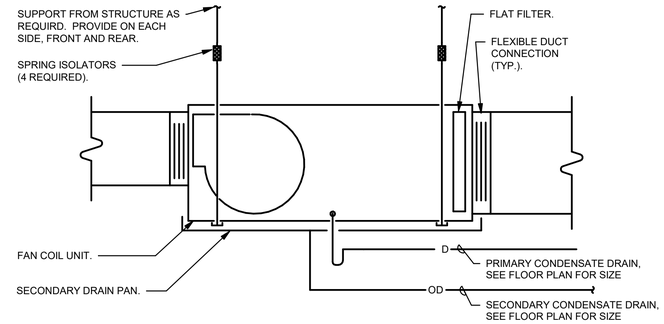

1 FAN COIL INSTALLATION

NO SCALE

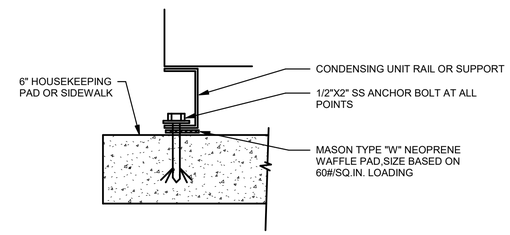

2 OUTDOOR CONDENSING UNIT MOUNTING

NO SCALE

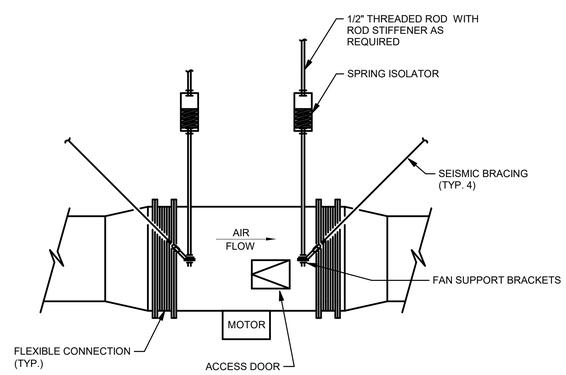

3 INLINE EXHAUST FAN DETAIL

NO SCALE

INTERFACE ENGINEERING

PROJECT 2021-0925
CONTACT Steve Dacus
100 SW Main Street, Suite 1600
Portland, OR 97204
TEL 503.382.2266
www.interfaceengineering.com

NO.	DATE	BY	REVISION

NOTICE
0 1/2 1
IF THIS BAR DOES NOT MEASURE 1" THEN DRAWING IS NOT TO SCALE

GKW
SED
Author
IAB
GKW
AWF

REGISTERED PROFESSIONAL ENGINEER 50530PE OREGON JULY 21, 1998 STEVEN E. DACUS
EXPIRES: 12/31/23

WEST YOST
Water. Engineered.

Sweet Home Oregon at its best!

MAHLER WATER RECLAMATION FACILITY IMPROVEMENTS PROJECT PHASE 1

HVAC SYMBOL LIST AND GENERAL NOTES

PROJECT NO.: 936-50-21-09 | SCALE NO SCALE | DATE August 2022

SHEET H-001

7/28/2022 11:58:41 AM Autodesk Docs://Sweet Home WWTP/21009 Sweet Home WWTP_Elect Bldg_MEP_v2022.rvt

DocuSign Envelope ID: 09934EE9-0C55-40A3-8631-9C0AF6797111

FAN COIL SCHEDULE

SYMBOL	LOCATION	SERVING	BASIS OF DESIGN		NOM TONS	RELATED CU	AIR FLOW (CFM)	MIN OSA	FAN ESP (IN H2O)	DX COOLING COIL		HEATING		ELECTRICAL					ECM MOTOR	CONTROLS REF	MAX WT (LBS)	COMMENTS
			MFR	MODEL						TOTAL CAP (MBH)	SENS CAP (MBH)	CAP (kW)	STAGES	VOLTS	PH	FAN HP	MCA	MOCP				
FC-1	EXISTING ELECTRICAL	EXIST ELECTRICAL	TRANE	TAM9	4	CU-1	1600	0	0.375	48.0	36.0	7.2	1	208	3	0.75	31.0	35	YES	THERMOSTAT	180	

CONDENSING UNIT SCHEDULE

SYMBOL	LOCATION	AREA SERVED	BASIS OF DESIGN		RELATED FAN	AIR SOURCE CONDENSER				ELECTRICAL				CONTROLS REF	APPROX DIMS (LxWxH)	MAX WT (LBS)	COMMENTS
			MFR	MODEL		NOM TONS	CAP (MBH)	AMB TEMP (°F)	MIN EFF (SEER)	VOLTS	PH	MCA	MOCP				
CU-1	AT GRADE	EXIST ELECTRICAL	TRANE	4TTA4	FC-1	4	48.0	95	14	480	3	8.0	15	THERMOSTAT	37"x34"x29"	200	

DIFFUSER, REGISTER AND GRILLE SCHEDULE

SYMBOL	TYPE	FACE	FRAME	DAMPER	FINISH	BASIS OF DESIGN	NOTES
RG-1	RETURN WALL GRILLE	FIXED BAR 35 DEG. DEFL.	1/4" BORDER	NONE	WHITE	TITUS 350R	
SG-1	SIDEWALL SUPPLY GRILLE	DOUBLE DEFL.	1/4" BORDER	NONE	WHITE	TITUS 300R	

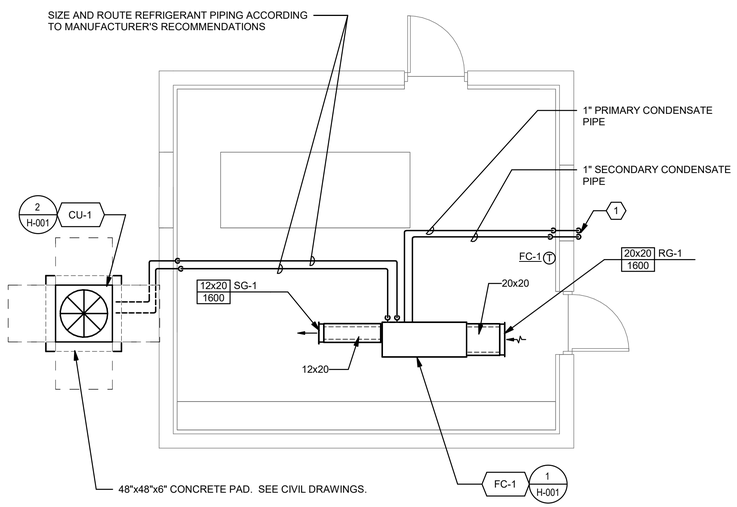

1 SOUTH ELECTRICAL BUILDING - HVAC FLOOR PLAN

0' 2' 4' 8'
1/4" = 1'-0"

SHEET KEYNOTES

1. ROUTE PRIMARY AND SECONDARY CONDENSATE DRAINS THROUGH EXISTING LOUVER OPENING. SEAL PIPING PENETRATIONS IN NEW SIDING. PRIMARY PIPING ROUTED TO WITHIN 12" OF FINISHED FLOOR WITH 90 DEGREE ELBOW DOWN AT EXTERIOR OF SIDING. SECONDARY PIPING ROUTED THROUGH TOP OF EXISTING OPENING WITH 90 DEGREE ELBOW DOWN.

INTERFACE ENGINEERING
PROJECT 2021-0925
CONTACT Cody Barholz
100 SW Main Street, Suite 1600
Portland, OR 97204
TEL 503.382.2266
www.interfaceengineering.com

NO.	DATE	BY	REVISION

NOTICE
0 1/2 1
IF THIS BAR DOES NOT MEASURE 1" THEN DRAWING IS NOT TO SCALE

Designer SED
Author IAB
Checker AWF

REGISTERED PROFESSIONAL ENGINEER 50 OREGON JULY 21, 1998 STEVEN E. DACUS
EXPIRES: 12/31/23

WEST YOST
Water. Engineered.

Sweet Home Oregon at its best!

MAHLER WATER RECLAMATION FACILITY IMPROVEMENTS PROJECT PHASE 1

SOUTH ELECTRICAL BUILDING HVAC FLOOR PLAN

PROJECT NO.: 936-50-21-09 | SCALE 1/4" = 1'-0" | DATE August 2022

SHEET H-100

7/28/2022 11:58:41 AM Autodesk Docs://Sweet Home WWTP/21009 Sweet Home WWTP_Elect Bldg_MEP_v2022.rvt

DocuSign Envelope ID: 09934EE9-0C55-40A3-8631-9C0AF6797111

AHU SCHEDULE

SYMBOL	LOCATION	SERVING	BASIS OF DESIGN MFR	BASIS OF DESIGN MODEL	AIR FLOW (CFM)	MIN OSA	FAN ESP (IN H2O)	COOLING TOTAL CAP (MBH)	COOLING ROWS FPI	COOLING EDB (°F)	COOLING LDB (°F)	HEATING MIN CAP (KW)	ELECTRICAL VOLTS	ELECTRICAL PH	ELECTRICAL MCA	ECM MOTOR	CONTROLS REF	MAX WT (LBS)	COMMENTS
AHU-1	ELECTRICAL RM. 420	ELECTRICAL RM. 420	TRANE	TWE0724B	2400	0	1.5	78.0	4/14	75	55	10.0	460	3	19.0	Y	THERMOSTAT	323	

DIFFUSER, REGISTER AND GRILLE SCHEDULE

SYMBOL	TYPE	FACE	FRAME	DAMPER	FINISH	BASIS OF DESIGN MFR.	BASIS OF DESIGN MODEL	COMMENTS
EG-1	EXHAUST WALL GRILLE	FIXED BAR 35 DEG. DEFL.	1/4" BORDER	NONE	WHITE	TITUS	350R	
RG-1	RETURN REGISTER	FIXED BAR 35 DEG. DEFL.	1/4" BORDER	NONE	WHITE	TITUS	350R	
SG-1	SUPPLY WALL GRILLE	DOUBLE DEFL.	1/4" BORDER	NONE	WHITE	TITUS	300R	

CONDENSING UNIT SCHEDULE

SYMBOL	LOCATION	AREA SERVED	BASIS OF DESIGN MFR	BASIS OF DESIGN MODEL	RELATED FAN	AIR SOURCE CONDENSER NOM TONS	AIR SOURCE CONDENSER CAP (MBH)	AIR SOURCE CONDENSER AMB TEMP (°F)	AIR SOURCE CONDENSER MIN EFF (EER)	ELECTRICAL VOLTS	ELECTRICAL PH	ELECTRICAL MCA	ELECTRICAL MOCP	CONTROLS REF	APPROX DIMS (LxWxH)	MAX WT (LBS)	COMMENTS
CU-1	OUTSIDE	ELECTRIC RM. 420	TRANE	TTA07244D	AHU-1	6	78.0	95	12	460	3	14.0	20	THERMOSTAT	45" x 45" x 38"	155	

UNIT HEATER SCHEDULE

SYMBOL	LOCATION	SERVING	BASIS OF DESIGN MFR	BASIS OF DESIGN MODEL	SUPPLY FAN AIR FLOW (CFM)	ELECT RESIST HTG (KW)	STAGES	ELECTRICAL VOLTS	ELECTRICAL PH	ELECTRICAL MCA	ELECTRICAL MOCP	CONTROLS REF	MAX WT (LBS)	COMMENTS
UH-1	BLOWER ROOM 421	BLOWER ROOM 421	QMARK	MWUH	270	1.9	1	208	1	11.3	15	THERMOSTAT	50	THERMOSTAT WITH SUMMER FAN SWITCH

FAN SCHEDULE

SYMBOL	LOCATION	AREA SERVED	BASIS OF DESIGN MFR	BASIS OF DESIGN MODEL	TYPE	DRIVE	AIR FLOW (CFM)	TSP (IN H20)	MAX RPM	SOUNDS SONES	ELECTRICAL VOLTS	ELECTRICAL PH	ELECTRICAL BHP	ELECTRICAL MHP	CONTROLS REF	MAX WT (LBS)	COMMENTS
EF-1	BLOWER ROOM 421	BLOWER ROOM 421	GREENEHCK	SQ-160-VG	INLINE	DIRECT	3600	0.375	1350	17	208	3	0.84	2	THERMOSTAT	170	

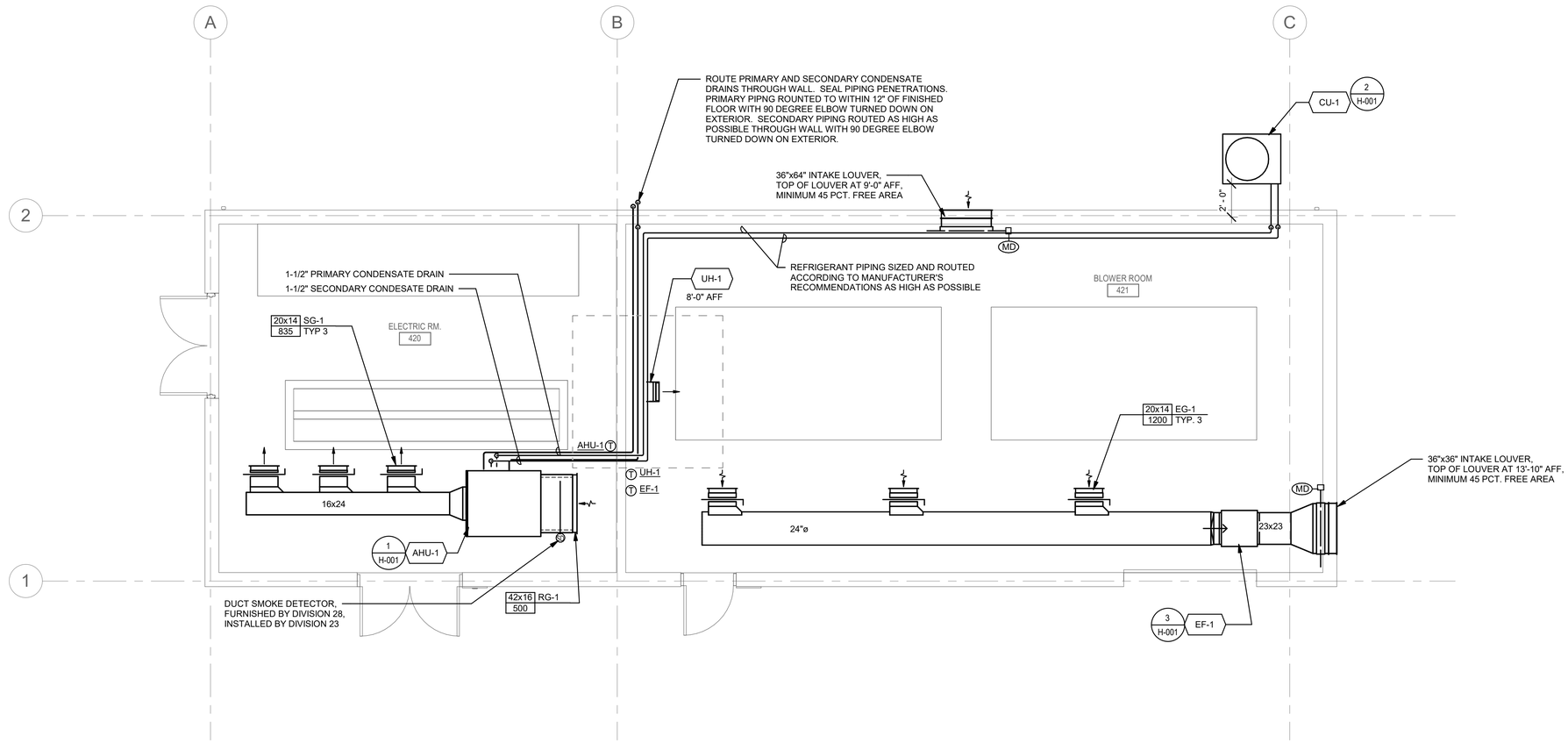

INTERFACE ENGINEERING
PROJECT 2021-0925
CONTACT Ian Bernardo
100 SW Main Street, Suite 1600
Portland, OR 97204
TEL 503.382.2266
www.interfaceengineering.com

NORTH

1 MAIN ELECTRICAL & BLOWER BUILDING - HVAC FLOOR PLAN

0' 2' 4' 8'
1/4" = 1'-0"

NO.	DATE	BY	REVISION

NOTICE
0 1/2 1
IF THIS BAR DOES NOT MEASURE 1" THEN DRAWING IS NOT TO SCALE

Designer: SED
Author: IAB
Checker: AWF

REGISTERED PROFESSIONAL ENGINEER — OREGON — JULY 21, 1998 — STEVEN E. DACUS
EXPIRES: 12/31/23

WEST YOST
Water. Engineered.

Sweet Home Oregon at its best!

MAHLER WATER RECLAMATION FACILITY IMPROVEMENTS PROJECT PHASE 1

MAIN ELECTRICAL & BLOWER BUILDING HVAC FLOOR PLAN

PROJECT NO.: 936-50-21-09 | SCALE 1/4" = 1'-0" | DATE August 2022

SHEET H-400

7/28/2022 11:59:13 AM Autodesk Docs://Sweet Home WWTP/21009 Sweet Home WWTP - Area 42 - MEP_v2022.rvt

DocuSign Envelope ID: 09934EE9-0C55-40A3-8631-9C0AF6797111

G:\PROJECTS\103 - West Yost Associates\1032109 - Sweet Home Wwtp Phase 1 Design\Design\(2) Drawings\Current\sweet Home Wwtp Phase 1 Design\Sheets\1032109-E-001 Electrical Abbreviations.dwg 1032109-E-001 Electrical Abbreviations 7/28/2022 5:46 PM JLUTE 24.1s (LMS Tech)

Electrical Abbreviations, General Notes, & Symbol Legend

Abbreviations

A	AMPERE
AC	ALTERNATING CURRENT, AIR CONDITIONING UNIT
AHJ	AUTHORITY HAVING JURISDICTION
AI	ANALOG INPUT
AIC	AVAILABLE INTERRUPTING CAPACITY
AF	AMPERE FRAME / AMPERE FUSED
AFC	ABOVE FINISHED CEILING
AFF	ABOVE FINISHED FLOOR
AFG	ABOVE FINISHED GRADE
ANSI	AMERICAN NATIONAL STANDARDS INSTITUTE
AO	ANALOG OUTPUT
ARMS	ARC FLASH REDUCTION MAINTENANCE SYSTEM
AT	AMPERE TRIP
AV	AUDIO / VIDEO
AWG	AMERICAN WIRE GAUGE
BAS	BUILDING AUTOMATION SYSTEM
BFG	BELOW FINISHED GRADE
BLDG	BUILDING
C	CONDUIT
CAT	CATEGORY
CB	CIRCUIT BREAKER
CFCI	CONTRACTOR FURNISHED, CONTRACTOR INSTALLED
CFOI	CONTRACTOR FURNISHED, OWNER INSTALLED
CKT	CIRCUIT
CPT	CONTROL POWER TRANSFORMER
CR	CONTROL RELAY
CU	COPPER
dB	DECIBAL
DC	DIRECT CURRENT
DI	DIGITAL INPUT
DIM	DIMENSION
DIV	DIVISION
DO	DIGITAL OUTPUT
DTL	DETAIL
DWG	DRAWING
EIP	ETHERNET IP
EL	ELEVATION
EMT	ELECTRICAL METALLIC TUBING
EOLR	END OF LINE RESISTOR
FACP	FIRE ALARM CONTROL PANEL
FF	FINISH FLOOR
FLA	FULL LOAD AMPERES
FT	FOOT, FEET
FBO	FURNISHED BY OTHERS
G, GND	GROUND
GD	GAS DETECTOR
GFCI	GROUND FAULT CIRCUIT INTERRUPTER
HH	HAND HOLE
HP	HORSEPOWER
ID	IDENTIFICATION
IDC	INITIATING DEVICE CIRCUIT
IDF	INTERMEDIATE DISTRIBUTION FRAME
IEEE	INSTITUTE OF ELECTRICAL AND ELECTRONICS ENGINEERS
IG	ISOLATED GROUND
IT	INFORMATION TECHNOLOGY
JB	JUNCTION BOX
KAIC	THOUSAND AMPS INTERRUPTING CURRENT
KCMIL	THOUSAND CIRCULAR MILS
KVA	KILOVOLT-AMPERE
KW	KILOWATT
LAN	LOCAL AREA NETWORK
LED	LIGHT EMITTING DIODE
LS	LIMIT SWITCH
LSI	ELECTRONIC TRIP UNIT ADJUSTABLE LONG TIME DELAY, SHORT TIME DELAY, INSTANTANEOUS TRIP
LSIG	ELECTRONIC TRIP UNIT WITH ADJUSTABLE LONG TIME DELAY, SHORT TIME DELAY, INSTANTANEOUS TRIP, AND GROUND FAULT
LV	LOW VOLTAGE
MCA	MINIMUM CIRCUIT AMPACITY
MCC	MOTOR CONTROL CENTER
MCP	MOTOR CIRCUIT PROTECTOR
MDF	MAIN DISTRIBUTION FRAME
MHz	MEGAHERTZ
MISC	MISCELLANEOUS
MLO	MAIN LUGS ONLY
MOCP	MAXIMUM OVERCURRENT PROTECTION
N	NEUTRAL
NAC	NOTIFICATION APPLIANCE CIRCUIT
N/A	NOT APPLICABLE
NC	NORMALLY CLOSED
NEC	NATIONAL ELECTRICAL CODE
NEMA	NATIONAL ELECTRICAL MANUFACTURERS ASSOCIATION
NEX	REPLACE EXISTING WIRING DEVICE AND FACEPLATE WITH NEW. BACK BOX AND CONDUIT SHALL REMAIN.
NL	NIGHT LIGHT
NO	NORMALLY OPEN
NTS	NOT TO SCALE
OC	ON CENTER
OFCI	OWNER FURNISHED, CONTRACTOR INSTALLED
OFOI	OWNER FURNISHED, OWNER INSTALLED
Ø	PHASE
PB	PULL BOX, PANIC BUTTON, PUSH BUTTON
PE	PHOTO EYE
PNL	PANEL
POE	POWER OVER ETHERNET
PTZ	PAN, TILT, ZOOM
RF	RADIO FREQUENCY
RFI	REQUEST FOR INFORMATION
SLC	SIGNALING LINE CIRCUIT
SPD	SURGE PROTECTION DEVICE
STD	STANDARD
SW	SWITCH
T/M	THERMAL MAGNETIC CIRCUIT BREAKER
TBD	TO BE DETERMINED
TV	TELEVISION / MONITOR OUTLET
TVSS	TRANSIENT VOLTAGE SURGE SUPPRESSOR
TYP	TYPICAL
UH	UNIT HEATER
UG	UNDERGROUND
UL	UNDERWRITERS LABORATORIES
UPS	UNINTERRUPTIBLE POWER SUPPLY
UON	UNLESS OTHERWISE NOTED
USB	UNIVERSAL SERIAL BUS
V	VOLTS, VOLTAGE
VA	VOLT-AMPERE
VFD	VARIABLE FREQUENCY DRIVE
W	WATT, WIRE
WAN	WIDE AREA NETWORK
WAP	WIRELESS ACCESS POINT
WI-FI	WIRELESS FIDELITY
W/	WITH
W/O	WITHOUT
XFMR	TRANSFORMER
Y	WYE
1P	ONE POLE
2P	TWO POLE
3P	THREE POLE
4P	FOUR POLE

General Electrical Notes

1. ALL LIGHTING BRANCH CIRCUITS SHALL BE 2#10, 1#10G IN 3/4" CONDUIT, UON.
2. ALL 20-AMP RECEPTACLE AND HARDWIRED BRANCH CIRCUITS SHALL BE 2#12, 1#12G IN 3/4" CONDUIT, UON.
3. ALL EXIT SIGNS SHALL BE WIRED TO THE LOCAL LIGHTING BRANCH CIRCUIT AHEAD OF ALL SWITCHING.
4. PROVIDE 0-10V DIMMING CONDUCTORS TO ALL LUMINAIRES WHICH ARE CONTROLLED BY 0-10V DIMMERS SHOWN ON THE DRAWINGS.

Annotation

(N)	INDICATES NEW EQUIPMENT.
(E)	INDICATES EXISTING EQUIPMENT TO REMAIN.
(D)	INDICATES EXISTING EQUIPMENT TO BE DEMOLISHED.
(RR)/(RD)	INDICATED EXISTING EQUIPMENT OR DEVICE TO BE REMOVED AND REINSTALLED.
XXXX	CONDUIT & CONDUCTOR CALLOUT. REFER TO CONDUIT & CONDUCTOR SCHEDULE.
XX	KEYED NOTE CALLOUT. REFER TO CORRESPONDING SHEET KEYNOTES.
XX	KEYED NOTE CALLOUT. REFER TO CORRESPONDING SHEET KEYNOTES.
XX	KEYED NOTE CALLOUT. REFER TO CORRESPONDING SHEET KEYNOTES.
XX	MECHANICAL EQUIPMENT CALLOUT. REFER TO MECHANICAL EQUIPMENT CONNECTION SCHEDULE.
XX / EX.XX	DETAIL CALLOUT. REFER TO DETAIL AND SHEET AS INDICATED ON CALLOUT.
XX'-XX"	FIXTURE MOUNTING CALLOUT. HEIGHT ABOVE FINISHED FLOOR (A.F.F.)
XXXXX	EQUIPMENT CALLOUT. REFER TO NEMA CONNECTION SCHEDULE.
-	SECTION CALLOUT. REFER TO SECTION AND SHEET AS INDICATED ON CALLOUT.
# EX.XX #	ELEVATION CALLOUT. REFER TO ELEVATION AND SHEET AS INDICATED ON CALLOUT.

NO.	DATE	BY	REVISION

NOTICE
0 ½ 1
IF THIS BAR DOES NOT MEASURE 1" THEN DRAWING IS NOT TO SCALE

MB DESIGNED
JL DRAWN
BP CHECKED

REGISTERED PROFESSIONAL ENGINEER 86683 Digitally Signed OREGON MAY 08, 2012 BENJAMIN E. PERRY
EXPIRES: 12-31-2022

WEST YOST Water. Engineered.

Landis Consulting
ENGINEERING SERVICES
6446 Fairway Ave. SE, Suite 220
Salem, OR 97306
503-584-1576
www.landisconsulting.com

Sweet Home Oregon at its best!

MAHLER WATER RECLAMATION FACILITY IMPROVEMENTS PROJECT PHASE 1

ELECTRICAL ABBREVIATIONS

PROJECT NO.: 936-50-21-09 | SCALE: AS NOTED | DATE: AUGUST 2022

SHEET
E-001

DocuSign Envelope ID: 09934EE9-0C55-40A3-8631-9C0AF6797111

G:\PROJECTS\103 - West Yost Associates\1032109 - Sweet Home Wwtp Phase 1 Design\Sheets\1032109-E-002 Electrical Symbol Legend.dwg 1032109-E-002 Electrical
Symbol Legend 7/28/2022 5:46 PM JLUTE 24.1s (LMS Tech)

Electrical Symbol Legend

Power Distribution

- DUPLEX RECEPTACLE, MOUNTED AT 18" AFF, UON.
- SIMPLEX RECEPTACLE, MOUNTED AT 18" AFF, UON.
- QUADPLEX RECEPTACLE, MOUNTED AT 18" AFF, UON.
- GFCI DUPLEX RECEPTACLE, MOUNTED AT 18" AFF, UON.
- GFCI QUADPLEX RECEPTACLE, MOUNTED AT 18" AFF, UON.
- TAMPER RESISTANT DUPLEX RECEPTACLE, MOUNTED AT 18" AFF, UON.
- TAMPER RESISTANT QUADPLEX RECEPTACLE, MOUNTED AT 18" AFF, UON.
- SWITCHED DUPLEX RECEPTACLE, MOUNTED AT 18" AFF, UON.
- NEMA SPECIAL RECEPTACLE, MOUNTED AT 18" AFF, UON. NEMA CONFIGURATION AS INDICATED.
- CENTER HATCHED RECEPTACLE TO BE WIRED TO EMERGENCY CIRCUIT.
- RECEPTACLE MOUNTED ON CEILING.
- RECEPTACLE MOUNTED IN-COUNTER.
- DISCONNECT SWITCH.
- FUSED DISCONNECT SWITCH.
- ENCLOSED CIRCUIT BREAKER.
- COMBINATION STARTER.
- FLOORBOX COMBINATION POWER & DATA.
- FLOORBOX POWER.
- POKETHRU COMBINATION POWER & DATA.
- POKETHRU POWER.
- POWER/DATA POLE.
- PANELBOARD SURFACE MOUNT.
- PANELBOARD FLUSH MOUNT.
- MAIN DISTRIBUTION PANEL.
- UTILITY CT METER.
- UTILITY TRANSFORMER.

Drawing Symbol Variables

3	THREE WAY SWITCH.
4	FOUR WAY SWITCH.
#J	QUANTITY OF JACKS AND HORIZONTAL CABLES. J = CAT6, JA = CAT6A, JE = CAT5E
+XX	MOUNTING UNITS EXPRESSED IN INCHES TO CENTERLINE ABOVE FINISHED FLOOR OR GRADE.
C	MOUNTED HORIZONTALLY AT 4" ABOVE COUNTERTOP.
CL	CLOCK.
DR	DUAL RELAY.
E	RED EMERGENCY SWITCH.
EL	ELEVATOR RECALL.
ETR	EXISTING DEVICE SHALL REMAIN.
G	GLASS BREAK SENSOR.
K	KEYED SWITCH.
LF	LOW FREQUENCY.
LV	LOW VOLTAGE SWITCH.
M	MOTOR RATED TOGGLE SWITCH.
NEX	REPLACE EXISTING WIRING DEVICE AND FACEPLATE WITH NEW. BACK BOX AND CONDUIT SHALL REMAIN.
O	INTEGRAL OCCUPANCY SENSOR.
P	ADA PHONE, VERIFY HEIGHT WITH ARCHITECT / OWNER.
REX	REMOVE EXISTING DEVICE / EQUIPMENT.
TK	MOUNTED IN TOE KICK OF CASEWORK.
TV	MOUNTED ADJACENT TO TV AT 60" AFF, UON.
V	VANDAL RESISTANT.
WG	WIREGUARD.
WP	WEATHERPROOF.

Lighting

- TROFFER LUMINAIRE, SURFACE OR RECESS MOUNTED AS INDICATED ON THE DRAWINGS.
- DOWNLIGHT LUMINAIRE, SURFACE, RECESS, OR PENDANT MOUNTED AS INDICATED ON THE DRAWINGS.
- UNDERCABINET LUMINAIRE.
- EMERGENCY BATTERY PACK LUMINAIRE, WALL OR CEILING MOUNTED.
- LINEAR PENDANT MOUNTED LUMINAIRE.
- LINEAR WALL MOUNTED LUMINAIRE.
- BOLLARD LUMINAIRE.
- SITE LUMINAIRE POLE MOUNTED. NUMBER OF HEADS AS SHOWN.
- TRACK LUMINAIRE.
- SPOT LUMINAIRE.
- WALL MOUNTED LUMINAIRE.
- EXIT SIGN, WALL OR CEILING MOUNTED, SINGLE FACE WITH DIRECTIONAL CHEVRONS AS INDICATED ON DRAWINGS.
- EXIT SIGN, WALL OR CEILING MOUNTED, DOUBLE FACE WITH DIRECTIONAL CHEVRONS AS INDICATED ON DRAWINGS.
- HALF HATCHED LUMINAIRE TO BE WIRED TO EMERGENCY CIRCUIT.
- FULL HATCHED LUMINAIRE TO BE WIRED TO NIGHTLIGHT CIRCUIT.
- WALL WASH LUMINAIRE POINTED IN DIRECTION AS SHOWN

Raceways

- CONDUIT AND/OR CONDUCTORS INSTALLED ABOVE GRADE, CONCEALED IN WALL OR CEILING SPACE.
- CONDUIT AND/OR CONDUCTORS INSTALLED BELOW GRADE, BELOW SLAB.
- CONDUIT TURNED DOWN.
- CONDUIT TURNED UP.
- CONDUIT STUBBED AND CAPPED.
- CONDUIT DIRECT CONNECTION TO EQUIPMENT.
- FLEXIBLE CONNECTION TO EQUIPMENT.
- CONDUIT / WIRING CONTINUATION.
- HOMERUN TO PANELBOARD.
- CABLE TRAY. SIZE AND TYPE AS INDICATED ON DRAWINGS.

Switches

- SINGLE POLE SWITCH - MOUNTED AT 42" AFF, UON.
- LOW VOLTAGE 0-10 VOLT DIMMING SWITCH - MOUNTED AT 42" AFF, UON.
- OCCUPANCY SENSOR - CEILING OR WALL MOUNTED.
- OCCUPANCY SENSOR POWER PACK.
- PHOTOCELL - CEILING OR WALL MOUNTED.
- ADA DOOR PUSHPLATE.
- EMERGENCY STOP SWITCH, MUSHROOM HEAD.
- PUSHBUTTON, SINGLE OR DOUBLE.

One-Line Diagram

- CIRCUIT BREAKER.
- DRAWOUT CIRCUIT BREAKER.
- ENCLOSED CIRCUIT BREAKER.
- MOTOR STARTER CONTACT.
- DISCONNECT SWITCH.
- ENCLOSED DISCONNECT SWITCH.
- FUSED DISCONNECT SWITCH.
- ENCLOSED FUSED DISCONNECT SWITCH.
- CURRENT TRANSFORMER METER.
- FUSE, RATING AS SHOWN ON DRAWINGS.
- GENERATOR, CONFIGURATION AS INDICATED ON DRAWING.
- GROUND ROD.
- EQUIPMENT GROUND.
- MOTOR, RATED AS INDICATED ON DRAWINGS.
- NEMA CONNECTION.
- PANEL.
- MINI POWER CENTER.
- SHUNT TRIP.
- HEATER.
- REMOTE ANNUNCIATOR.
- BATTERY CHARGER.
- SURGE SUPPRESSION DEVICE.
- DIGITAL METER.
- VARIABLE FREQUENCY DRIVE.
- SOFT STARTER.
- TRANSFER SWITCH, WITH FUSES OR BREAKERS AS SHOWN ON DRAWINGS.
- TRANSFORMER.

Miscellaneous

- JUNCTION BOX (ROUND, SQUARE).
- THERMOSTAT.
- RELAY.
- CORD REEL.
- MOTOR / EXHAUST FAN.
- CEILING FAN.
- UTILITY POLE.
- WEATHERHEAD.
- GROUND ROD.
- GROUND ROD WITH TEST WELL.
- SURFACE RACEWAY / WIREMOLD.
- FIRE RATED BACKBOARD.
- GROUND BUS BAR.

Access Control & Security

- ACCESS CONTROL - DOOR CONTACT. PROVIDE 3/4" CONDUIT FROM DOOR FRAME TO ACCESSIBLE CEILING OR SECURITY JUNCTION BOX AS SHOWN ON THE DRAWINGS.
- ACCESS CONTROL - CARD READER. PROVIDE 3/4" CONDUIT FROM DOOR FRAME TO ACCESSIBLE CEILING OR SECURITY JUNCTION BOX AS SHOWN ON THE DRAWINGS.
- ACCESS CONTROL - ELECTRIC STRIKE. PROVIDE 3/4" CONDUIT FROM DOOR FRAME TO ACCESSIBLE CEILING OR SECURITY JUNCTION BOX AS SHOWN ON THE DRAWINGS.
- ACCESS CONTROL - KEY PAD. PROVIDE 3/4" CONDUIT FROM DOOR FRAME TO ACCESSIBLE CEILING OR SECURITY JUNCTION BOX AS SHOWN ON THE DRAWINGS.
- ACCESS CONTROL - MAGNETIC LOCK. PROVIDE 3/4" CONDUIT FROM DOOR FRAME TO ACCESSIBLE CEILING OR SECURITY JUNCTION BOX AS SHOWN ON THE DRAWINGS.
- ACCESS CONTROL - REQUEST TO EXIT. PROVIDE 3/4" CONDUIT FROM DOOR FRAME TO ACCESSIBLE CEILING OR SECURITY JUNCTION BOX AS SHOWN ON THE DRAWINGS.
- ACCESS CONTROL - ELECTRIFIED PANIC BAR. PROVIDE 3/4" CONDUIT FROM DOOR FRAME TO ACCESSIBLE CEILING OR SECURITY JUNCTION BOX AS SHOWN ON THE DRAWINGS.
- ACCESS CONTROL - SECURITY JUNCTION BOX. SIZED AS RECOMMENDED BY SECURITY SYSTEM MANUFACTURER.
- ACCESS CONTROL - CAMERA / INTERCOM.
- ACCESS CONTROL - PANIC BUTTON.
- SECURITY CAMERA - CEILING MOUNTED. PROVIDE ONE (1) CAT6.
- SECURITY CAMERA - WALL MOUNTED. PROVIDE ONE (1) CAT6.
- INTRUSION SENSOR - CEILING MOUNTED.
- INTRUSION SENSOR - WALL MOUNTED.
- INTRUSION KEYPAD.

Low Voltage

- ETHERNET OUTLET MOUNTED AT 18" AFF, UON.
- COAXIAL OUTLET MOUNTED AT 18" AFF, UON.
- PHONE OUTLET MOUNTED AT 18" AFF, UON.
- LOW VOLTAGE OUTLET CEILING MOUNTED.
- WIRELESS ACCESS POINT CEILING MOUNTED.
- WIRELESS ACCESS POINT WALL MOUNTED.
- DIGITAL CLOCK.
- FLOORBOX DATA.
- POKETHRU DATA.
- IT RACK.
- VERTICAL WIRE MANAGEMENT.

NO.	DATE	BY	REVISION

NOTICE
0 ½ 1
IF THIS BAR DOES NOT MEASURE 1" THEN DRAWING IS NOT TO SCALE

MB DESIGNED
JL DRAWN
BP CHECKED

REGISTERED PROFESSIONAL ENGINEER 86683 OREGON MAY 08, 2012 BENJAMIN E. PERRY
Digitally Signed
EXPIRES: 12-31-2022

WEST YOST
Water. Engineered.

Landis Consulting
ENGINEERING SERVICES
6446 Fairway Ave. SE, Suite 220
Salem, OR 97306
503-584-1576
www.landisconsulting.com

Sweet Home Oregon at its best!

MAHLER WATER RECLAMATION FACILITY IMPROVEMENTS PROJECT PHASE 1

ELECTRICAL SYMBOL LEGEND

PROJECT NO.: 936-50-21-09 | SCALE: AS NOTED | DATE: AUGUST 2022

SHEET
E-002

DocuSign Envelope ID: 09934EE9-0C55-40A3-8631-9C0AF6797111

G:\PROJECTS\103 - West Yost Associates\10321 09 - Sweet Home Wwtp Phase 1 Design\Design\(2) Drawings\Current\sweet Home Wwtp Phase 1 Design\Sheets\E-003 Electrical Details 1.dwg E-003 Electrical Details 1 7/28/2022 6:21 PM
JLUTE 24.1s (LMS Tech)

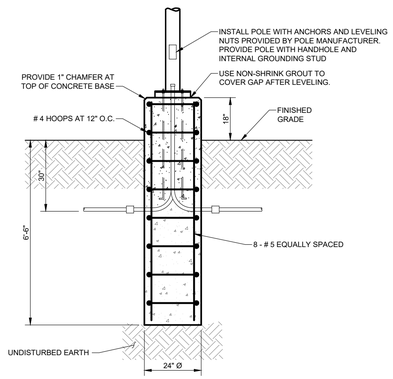

WALKWAY POLE MOUNTED LIGHTING BASE

SCALE: NTS | DETAIL NO. 101

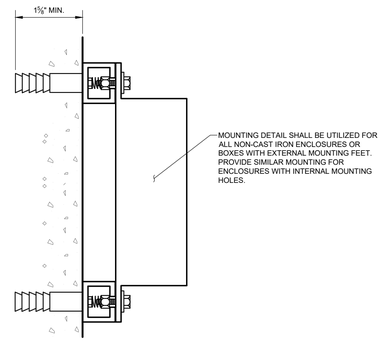

ENCLOSURE WALL MOUNTING DETAIL

SCALE: NTS | DETAIL NO. 102

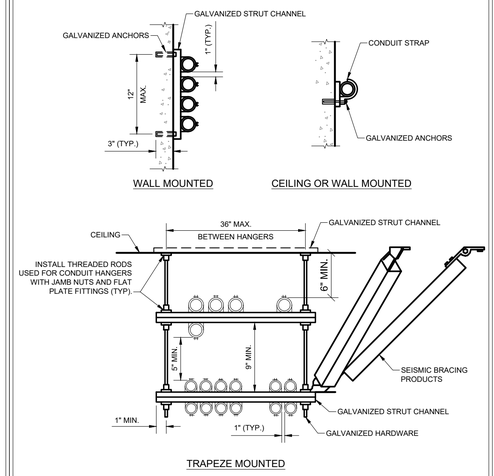

CONDUIT MOUNTING

SCALE: NTS | DETAIL NO. 103

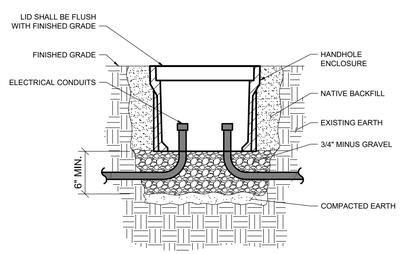

HANDHOLE ENCLOSURE

SCALE: NTS | DETAIL NO. 104

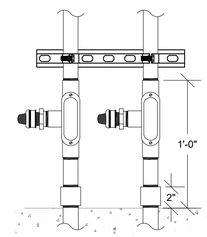

THROUGH FLOOR CONDUITS

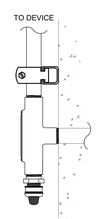

THROUGH WALL CONDUITS

CONDUIT DRAIN DETAIL

SCALE: NTS | DETAIL NO. 105

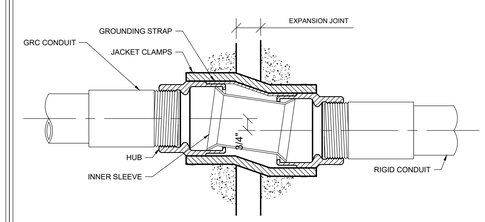

NOTES:

1. SEE REFERENCE KEYNOTE #260533.S99 FOR SEISMIC DEFLECTION COUPLING DETAILS.

SEISMIC JOINT CONDUIT DEFLECTION COUPLING DETAIL

SCALE: NTS | DETAIL NO. 106

NO.	DATE	BY	REVISION

NOTICE

0 ½ 1

IF THIS BAR DOES NOT MEASURE 1" THEN DRAWING IS NOT TO SCALE

MB DESIGNED
JL DRAWN
BP CHECKED

REGISTERED PROFESSIONAL ENGINEER 86683 OREGON MAY 08, 2012 BENJAMIN E. PERRY
Digitally Signed
EXPIRES: 12-31-2022

WEST YOST
Water. Engineered.

Landis Consulting
ENGINEERING SERVICES
6446 Fairway Ave. SE, Suite 220
Salem, OR 97306
503-584-1576
www.landisconsulting.com

Sweet Home Oregon at its best!

MAHLER WATER RECLAMATION FACILITY IMPROVEMENTS PROJECT PHASE 1

ELECTRICAL DETAILS 1

PROJECT NO.: 936-50-21-09 | SCALE: AS NOTED | DATE: AUGUST 2022

SHEET E-003

DocuSign Envelope ID: 09934EE9-0C55-40A3-8631-9C0AF6797111

G:\PROJECTS\103 - West Yost Associates\1032109 - Sweet Home Wwtp Phase 1 Design\Sheets\E-004 Electrical Details 2.dwg E-004 Electrical Details 2 7/28/2022 6:22 PM
JLUTE 24.1s (LMS Tech)

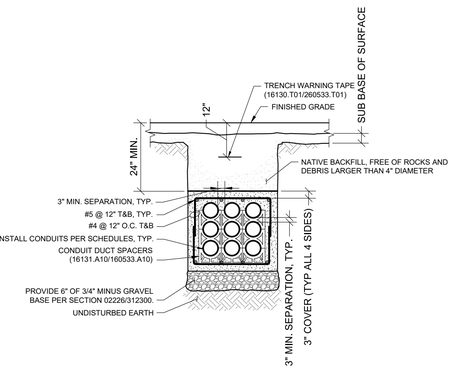

NOTES:

1.TYPICAL EXCEPT AS SPECIFIED.

2. MAINTAIN A MINIMUM OF 12" SEPARATION BETWEEN POWER CONDUITS AND CONTROL, TELECOMMUNICATION AND INSTRUMENTATION.

3. BACKFILL SHALL BE AS SPECIFIED IN SECTION 02226/312300.

CONCRETE ENCASED DUCTBANK DETAIL

SCALE: NTS | DETAIL NO. 107

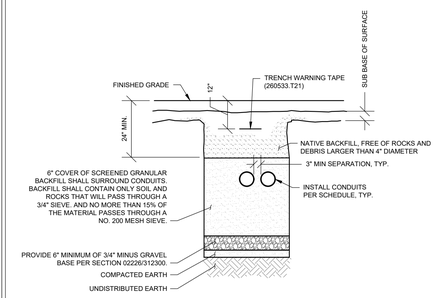

NOTES:

1.TYPICAL EXCEPT AS SPECIFIED.

2. MAINTAIN A MINIMUM OF 12" SEPARATION BETWEEN POWER CONDUITS AND CONTROL, TELECOMMUNICATION AND INSTRUMENTATION.

3. BACKFILL SHALL BE AS SPECIFIED IN SECTION 02226/312300.

NON-CONCRETE ENCASED DUCTBANK DETAIL

SCALE: NTS | DETAIL NO. 108

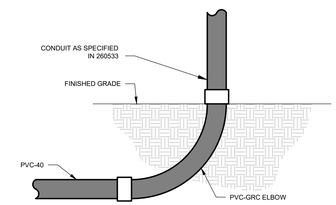

CONDUIT TRANSITION UNDERGROUND TO ABOVE GROUND PVC-GRC ELBOW DETAIL

SCALE: NTS | DETAIL NO. 109

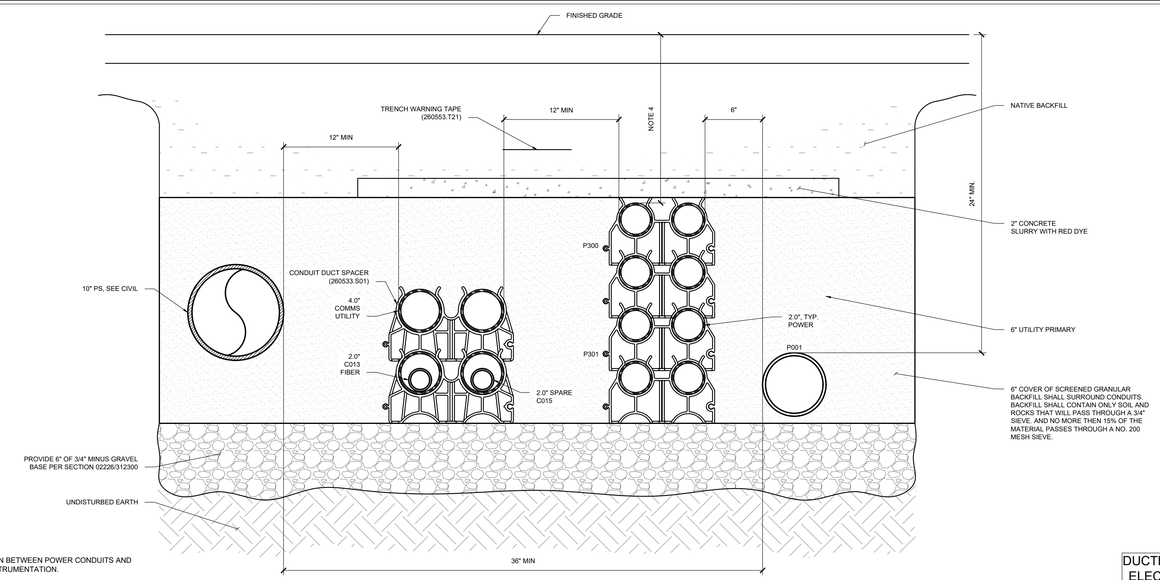

NOTES:

1.TYPICAL EXCEPT AS SPECIFIED.

2. MAINTAIN A MINIMUM OF 12" SEPARATION BETWEEN POWER CONDUITS AND CONTROL, TELECOMMUNICATION AND INSTRUMENTATION.

3. BACKFILL SHALL BE AS SPECIFIED IN SECTION 02226/312300.

4. 24" MINIMUM UNDER DRIVEWAYS AND AREAS WITH VEHICULAR TRAFFIC. 12" MINIMUM EVERYWHERE ELSE.

DUCTBANK TO EXISTING ELECTRICAL BUILDING SECTION

SCALE: NTS | DETAIL NO. 110

NO.	DATE	BY	REVISION

NOTICE

0 ½ 1

IF THIS BAR DOES NOT MEASURE 1" THEN DRAWING IS NOT TO SCALE

MB
DESIGNED
JL
DRAWN
BP
CHECKED

REGISTERED PROFESSIONAL ENGINEER
86683
Digitally Signed
OREGON
MAY 08, 2012
BENJAMIN E. PERRY
EXPIRES: 12-31-2022

WEST YOST
Water. Engineered.

Landis Consulting
ENGINEERING SERVICES
6446 Fairway Ave. SE, Suite 220
Salem, OR 97306
503-584-1576
www.landisconsulting.com

Sweet Home Oregon at its best!

MAHLER WATER RECLAMATION FACILITY IMPROVEMENTS PROJECT PHASE 1

ELECTRICAL DETAILS 2

PROJECT NO.: 936-50-21-09 | SCALE: AS NOTED | DATE: AUGUST 2022

SHEET
E-004
74 of 135

DocuSign Envelope ID: 09934EE9-0C55-40A3-8631-9C0AF6797111

G:\PROJECTS\103 - West Yost Associates\1032109 - Sweet Home Wwtp Phase 1 Design\Design\(2) Drawings\Current\sweet Home Wwtp Phase 1 Design\Sheets\1032109-E-010 Existing Conditions And Demolition One-Line Diagram.dwg
1032109-E-010 Existing Conditions and Demolition One-Line Diagram 7/28/2022 5:55 PM JLUTE 24.1s (LMS Tech)

SHEET KEY NOTES

1. DEMOLISH EXISTING GENERATOR IN THE EXISTING ELECTRICAL BUILDING.
2. EXISTING PLANT SHALL HAVE TEMPORARY EMERGENCY POWER FED BY THE OWNER FURNISHED. CONTRACTOR INSTALLED (OFCI) TEMPORARY GENSET DURING CONSTRUCTION OF PHASE 1.
3. CONTRACTOR SHALL INTERCEPT EXISTING UTILITY FEED AND WIRE TO CONTRACTOR PROVIDED TEMPORARY SERVICE ENTRANCE RATED ATS. ATS LOAD SIDE SHALL FEED THE EXISTING SERVICE SWITCHBOARD.
4. INTERCEPT AND EXTEND EXISTING FEEDER CONDUIT AND WIRING. PROVIDE JUNCTION BOX FOR SPLICING.
5. REMOVE SYSTEM BONDING JUMPER AND GROUNDING ELECTRODE CONNECTION AT SWITCHBOARD.
6. NEW SYSTEM BONDING AND GROUNDING ELECTRODE CONNECTION. PROVIDE #3/0 AWG CU.

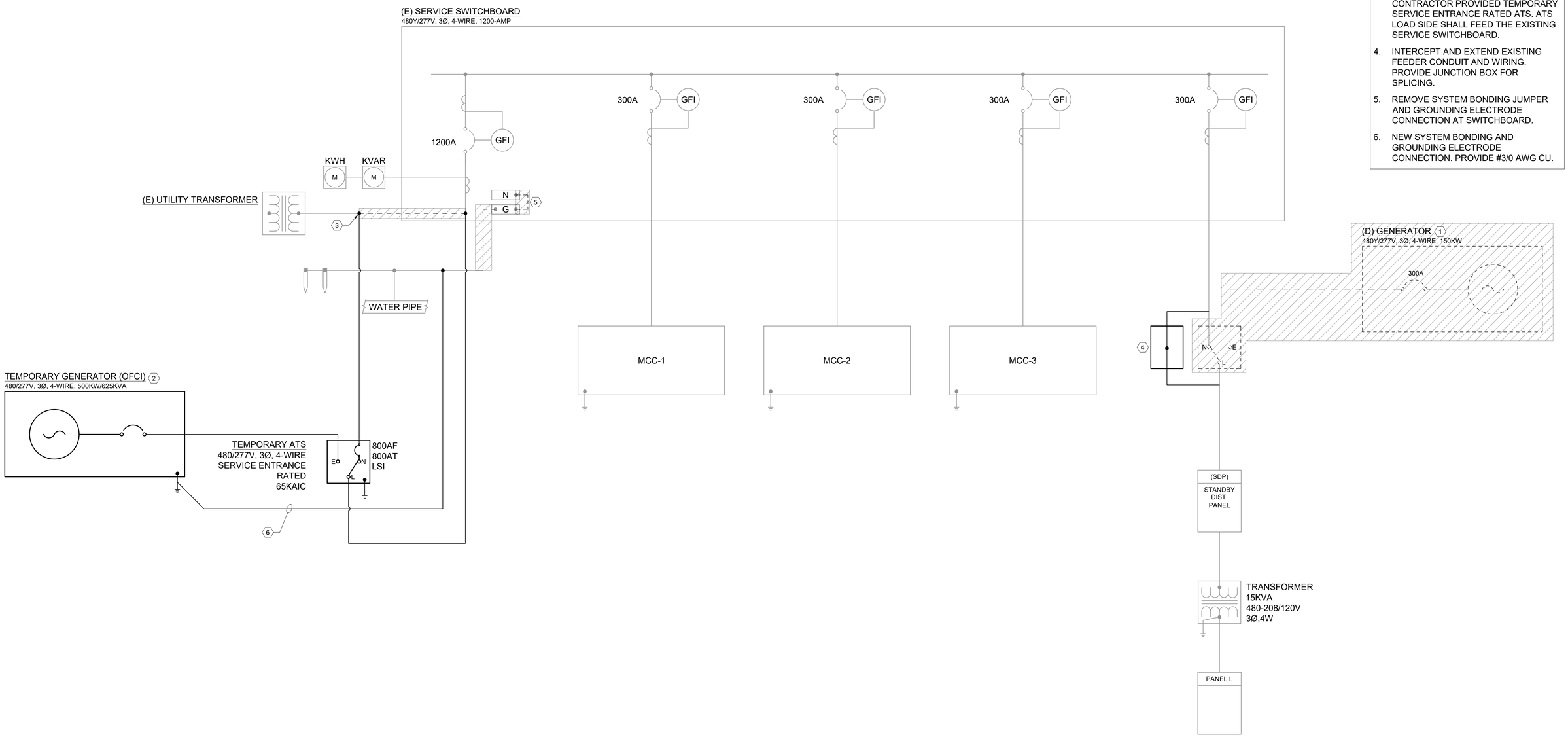

NO.	DATE	BY	REVISION

NOTICE
0 ½ 1
IF THIS BAR DOES NOT MEASURE 1" THEN DRAWING IS NOT TO SCALE

MB
DESIGNED
JL
DRAWN
BP
CHECKED

REGISTERED PROFESSIONAL ENGINEER 86683 OREGON
Digitally Signed
MAY 08, 2012
BENJAMIN E. PERRY
EXPIRES: 12-31-2022

WEST YOST
Water. Engineered.

Landis Consulting
ENGINEERING SERVICES
6446 Fairway Ave. SE, Suite 220
Salem, OR 97306
503-584-1576
www.landisconsulting.com

Sweet Home
Oregon at its best!

MAHLER WATER RECLAMATION FACILITY IMPROVEMENTS PROJECT PHASE 1

EXISTING CONDITIONS AND DEMOLITION ONE-LINE DIAGRAM

PROJECT NO.: 936-50-21-09 | SCALE: AS NOTED | DATE: AUGUST 2022

SHEET
E-010

DocuSign Envelope ID: 09934EE9-0C55-40A3-8631-9C0AF6797111

G:\PROJECTS\103 - West Yost Associates\1032109 - Sweet Home Wwtp Phase 1 Design\Design\(2) Drawings\Current\sweet Home Wwtp Phase 1 Design\Sheets\E-011 Service Entrance One-Line Diagram.dwg E-011 Service Entrance One-Line Diagram 7/28/2022 5:55 PM JLUTE 24.1s (LMS Tech)

SHEET KEY NOTES

1. EQUIPMENT IS OWNER FURNISHED, CONTRACTOR INSTALLED.
2. PROVIDE AMP SENTRY RELAY.

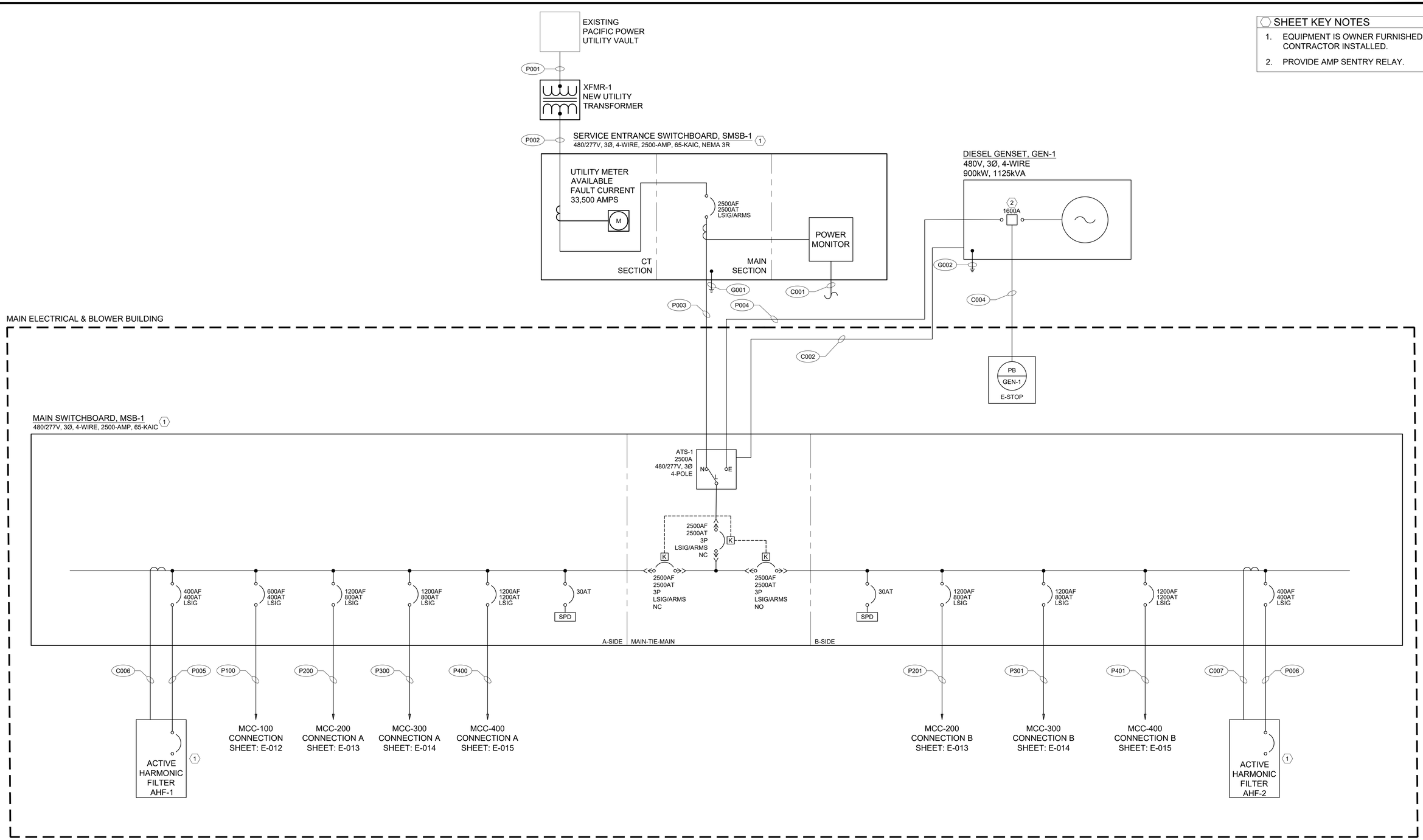

NO.	DATE	BY	REVISION

NOTICE

0 ½ 1

IF THIS BAR DOES NOT MEASURE 1" THEN DRAWING IS NOT TO SCALE

MB
DESIGNED
JL
DRAWN
BP
CHECKED

REGISTERED PROFESSIONAL ENGINEER
86683
Digitally Signed
OREGON
MAY 08, 2012
BENJAMIN E. FERRY
EXPIRES: 12-31-2022

WEST YOST
Water. Engineered.

Landis Consulting
ENGINEERING SERVICES
6446 Fairway Ave. SE, Suite 220
Salem, OR 97306
503-584-1576
www.landisconsulting.com

Sweet Home
Oregon at its best!

MAHLER WATER
RECLAMATION FACILITY
IMPROVEMENTS PROJECT
PHASE 1

SERVICE ENTRANCE ONE-LINE DIAGRAM

PROJECT NO.: 936-50-21-09 | SCALE: AS NOTED | DATE: AUGUST 2022

SHEET
E-011

DocuSign Envelope ID: 09934EE9-0C55-40A3-8631-9C0AF6797111

G:\PROJECTS\103 - West Yost Associates\1032109 - Sweet Home Wwtp Phase 1 Design\Design\(2) Drawings\Current\sweet Home Wwtp Phase 1 Design\Sheets\E-013 MCC-200 One-Line Diagram.dwg E-013 MCC-200 One-Line Diagram
7/28/2022 5:55 PM JLUTE 24.1s (LMS Tech)

GENERAL SHEET NOTES

1. MCC-200 MOTOR LOADS ARE PART OF PHASE 2, NOT PART OF THIS SCOPE.

SHEET KEY NOTES

1. EQUIPMENT IS OWNER FURNISHED, CONTRACTOR INSTALLED.
2. PROVIDE EQUIPMENT AS PART OF PHASE 1.
3. PROVIDE NEW CONDUIT AND ROUTE UNDERNEATH MEB BUILDING SLAB. MCC SECTION AND CONDUCTORS SHALL BE PART OF PHASE 2.

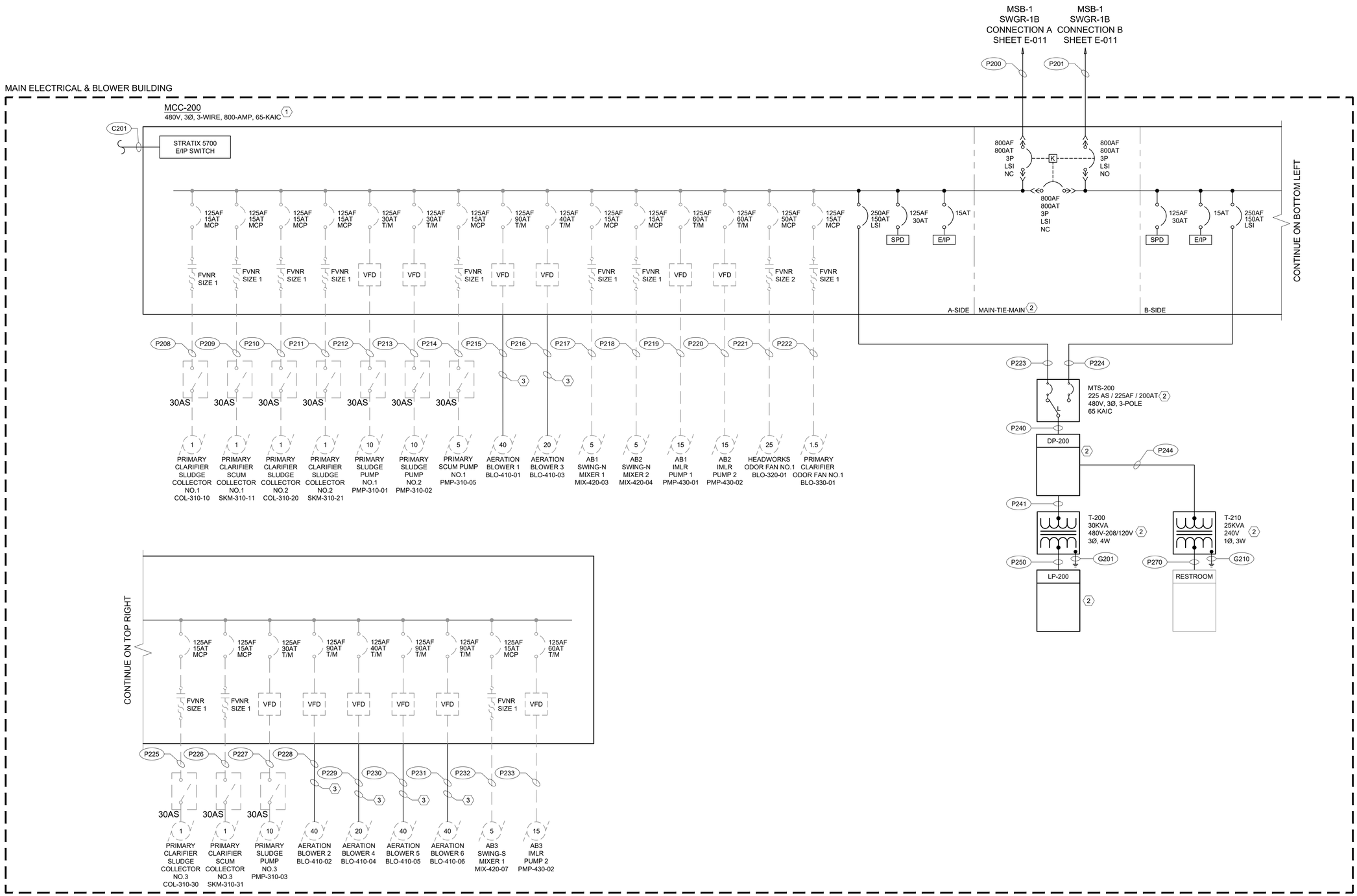

NO.	DATE	BY	REVISION

NOTICE
0 ½ 1
IF THIS BAR DOES NOT MEASURE 1" THEN DRAWING IS NOT TO SCALE

MB DESIGNED
JL DRAWN
BP CHECKED

REGISTERED PROFESSIONAL ENGINEER 86683 OREGON BENJAMIN E. PERRY
Digitally Signed
MAY 08, 2013
EXPIRES: 12-31-2022

WEST YOST
Water. Engineered.

Landis Consulting
ENGINEERING SERVICES
6446 Fairway Ave. SE, Suite 220
Salem, OR 97306
503-584-1576
www.landisconsulting.com

Sweet Home
Oregon at its best!

MAHLER WATER RECLAMATION FACILITY IMPROVEMENTS PROJECT PHASE 1

MCC-200 ONE-LINE DIAGRAM

PROJECT NO.: 936-50-21-09 | SCALE: AS NOTED | DATE: AUGUST 2022

SHEET
E-013

DocuSign Envelope ID: 09934EE9-0C55-40A3-8631-9C0AF6797111

G:\PROJECTS\103 - West Yost Associates\1032109 - Sweet Home Wwtp Phase 1 Design\Design\(2) Drawings\Current\sweet Home Wwtp Phase 1 Design\Sheets\E-014 MCC-300 One-Line Diagram.dwg E-014 MCC-300 One-Line Diagram
7/28/2022 5:54 PM JLUTE 24.1s (LMS Tech)

GENERAL SHEET NOTES

1. MCC-300 IS PART OF PHASE 1 SCOPE.

SHEET KEY NOTES

1. EQUIPMENT IS OWNER FURNISHED, CONTRACTOR INSTALLED.
2. PROVIDE GROUNDING ELECTRODE CONDUCTOR BONDED TO THE EXISTING GROUNDING ELECTRODE SYSTEM. INSTALL NEW GROUND RODS OUTSIDE THE BUILDING AND GROUND MCC-300.
3. EXTEND THE GROUNDING ELECTRODE CONDUCTOR FROM MCC-300 TO THE EXISTING SWITCHBOARD.
4. SECONDARY CLARIFIERS AND RAS/WAS PUMPS ARE PART OF PHASE 2, NOT PART OF THIS SCOPE.

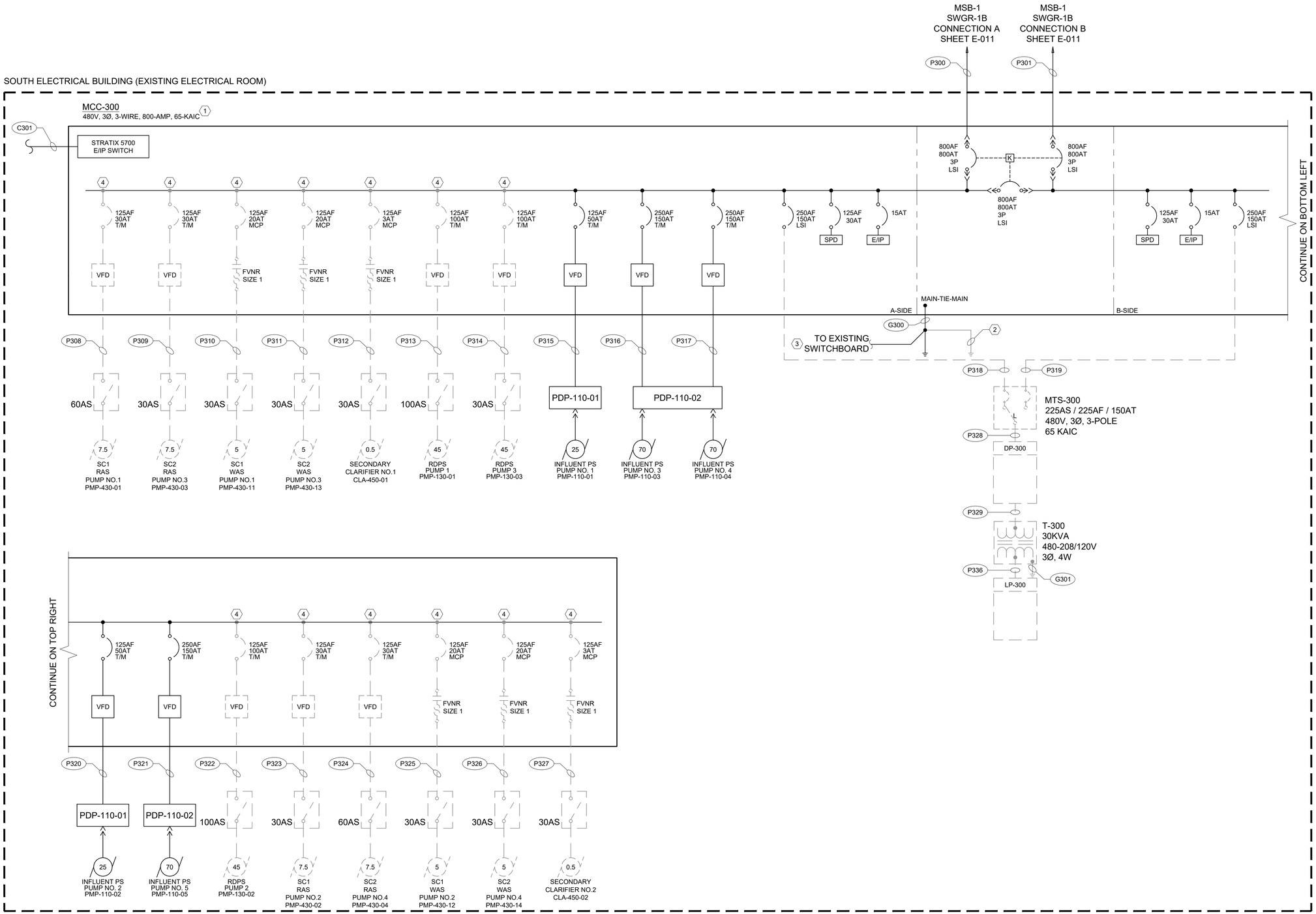

NO.	DATE	BY	REVISION

NOTICE
0 ½ 1
IF THIS BAR DOES NOT MEASURE 1" THEN DRAWING IS NOT TO SCALE

MB
DESIGNED
JL
DRAWN
BP
CHECKED

REGISTERED PROFESSIONAL ENGINEER 86683 OREGON BENJAMIN E. PERRY
Digitally Signed
MAY 08, 2012
EXPIRES: 12-31-2022

WEST YOST
Water. Engineered.

Landis Consulting
ENGINEERING SERVICES
6446 Fairway Ave. SE, Suite 220
Salem, OR 97306
503-584-1576
www.landisconsulting.com

Sweet Home
Oregon at its best!

MAHLER WATER RECLAMATION FACILITY IMPROVEMENTS PROJECT PHASE 1

MCC-300 ONE-LINE DIAGRAM

PROJECT NO.: 936-50-21-09 | SCALE: AS NOTED | DATE: AUGUST 2022

SHEET
E-014

DocuSign Envelope ID: 09934EE9-0C55-40A3-8631-9C0AF6797111

G:\PROJECTS\103 - West Yost Associates\1032109 - Sweet Home Wwtp Phase 1 Design\Design\(2) Drawings\Current\sweet Home Wwtp Phase 1 Design\Sheets\E-020 Power Conduit Schedule 1.dwg E-020 Power Conduit Schedule 1
7/28/2022 5:54 PM JLUTE 24.1s (LMS Tech)

SERVICE ENTRANCE POWER CONDUIT / CONDUCTOR SCHEDULE

CONDUIT ID NO.	CONDUIT		CONDUCTORS PER CONDUIT					FROM	TO	DESCRIPTION	NOTES
	QUANTITY	SIZE	UNGROUNDED	GROUNDED	GROUNDING	CABLE	SPARE				
P001	1	6.0 INCH	-	-	-	-	-	EXISTING UTILITY VAULT	NEW UTILITY XFMR-1	INSTALL PER UTILITY REQUIREMENTS	-
P002	6	6.0 INCH	-	-	-	-	-	NEW UTILITY XFMR-1	SMSB-1	INSTALL PER UTILITY REQUIREMENTS	-
P003	7	4.0 INCH	3 - #500	1 - #500	1 - #350	-	-	SMSB-1	MSB-1	-	-
P004	5	4.0 INCH	3 - #500	1 - #500	1 - #350	-	-	MSB-1	GENSET, GEN-1	-	-
P005	2	2.5 INCH	3 - #3/0	-	1 - #3	-	-	MSB-1	AHF-1	-	-
P006	2	2.5 INCH	3 - #3/0	-	1 - #3	-	-	MSB-1	AHF-2	-	-
P100	2	2.5 INCH	-	-	-	-	-	MSB-1	MCC-100	STUB OUT CONDUIT OUTSIDE OF MAIN ELECTRICAL & BLOWER BUILDING CONCRETE PAD, SEE E-102 FOR SITE PLAN.	-
P200	4	2.5 INCH	3 - #3/0	-	1 - #1/0	-	-	MSB-1	MCC-200	-	-
P201	4	2.5 INCH	3 - #3/0	-	1 - #1/0	-	-	MSB-1	MCC-200	-	-
P300	4	2.5 INCH	3 - #250	-	1 - #3/0	-	-	MSB-1	MCC-300	-	-
P301	4	2.5 INCH	3 - #250	-	1 - #3/0	-	-	MSB-1	MCC-300	-	-
P400	4	3.0 INCH	-	-	-	-	-	MSB-1	MCC-400	STUB OUT CONDUIT OUTSIDE OF MAIN ELECTRICAL & BLOWER BUILDING CONCRETE PAD, SEE E-102 FOR SITE PLAN.	-
P401	4	3.0 INCH	-	-	-	-	-	MSB-1	MCC-400	STUB OUT CONDUIT OUTSIDE OF MAIN ELECTRICAL & BLOWER BUILDING CONCRETE PAD, SEE E-102 FOR SITE PLAN.	-

NOTES:

MCC-100 POWER CONDUIT / CONDUCTOR SCHEDULE

CONDUIT ID NO.	CONDUIT		CONDUCTORS PER CONDUIT					FROM	TO	DESCRIPTION	NOTES
	QUANTITY	SIZE	UNGROUNDED	GROUNDED	GROUNDING	CABLE	SPARE				
P101	1	0.75 INCH	3 - #12	-	1 - #12	-	-	MCC-100	RAW SEWAGE SCREEN NO.1 SCN-230-10	-	1
P102	1	0.75 INCH	3 - #12	-	1 - #12	-	-	MCC-100	RAW SEWAGE SCREEN NO.2 SCN-230-20	-	1
P103	1	0.75 INCH	3 - #12	-	1 - #12	-	-	MCC-100	SCREENINGS WASH PRESS SWP-230-01	-	1
P104	1	0.75 INCH	3 - #12	-	1 - #10	-	-	MCC-100	GRIT PUMP PMP-240-01	-	1
P105	1	0.75 INCH	3 - #12	-	1 - #12	-	-	MCC-100	GRIT BASIN DRIVE MTR-240-01	-	1
P106	1	0.75 INCH	3 - #12	-	1 - #12	-	-	MCC-100	GRIT CLASSIFIER CLS-240-01	-	1
P107	1	0.75 INCH	3 - #12	-	1 - #12	-	-	MCC-100	DEWATERING CONDITIONING TANK MIXER MIX-250-01	-	1
P108	1	0.75 INCH	3 - #12	-	1 - #12	-	-	MCC-100	DEWATERING SCREW PRESS DEW-250-02	-	1
P109	1	0.75 INCH	3 - #12	-	1 - #12	-	-	MCC-100	DEWATERING CONVEYOR 1 INCLINE CON-250-03	-	1
P110	1	0.75 INCH	3 - #12	-	1 - #12	-	-	MCC-100	DEWATERING CONVEYOR 2 HORIZONTAL CON-250-04	-	1
P111	1	0.75 INCH	3 - #12	-	1 - #12	-	-	MCC-100	DEWATERING CONVEYOR 3 LEVEL LODER CON-250-05	-	1
P112	1	0.75 INCH	3 - #12	-	1 - #12	-	-	MCC-100	DEWATERING POLYMER FEED PUMP NO.1 POL-250-04	-	1
P113	1	0.75 INCH	3 - #12	-	1 - #12	-	-	MCC-100	DEWATERING POLYMER FEED PUMP NO.2 POL-250-05	-	1
P114	1	1.5 INCH	3 - #2	-	1 - #6	-	-	MCC-100	TRANSFORMER T-ADMIN	-	1
P115	1	2.5 INCH	3 - #3/0	-	1 - #6	-	-	MCC-100	PANEL DP-100	-	1
P116	2	2.0 INCH	3 - #1/0	-	1 - #6	-	-	TRANSFORMER T-ADMIN	T-ADMIN DS	-	1
P117	1	1.25 INCH	3 - #4	-	1 - #8	-	-	PANEL DP-100	TRANSFORMER T-100	-	1
P118	1	0.75 INCH	3 - #12	-	1 - #12	-	-	PANEL DP-100	HEADWORKS SCREEN NO.1 INFLUENT GATE SLG-230-01	WIRE TO PANEL DP-100, CIRCUIT #13,15,17	1
P119	1	0.75 INCH	3 - #12	-	1 - #12	-	-	PANEL DP-100	HEADWORKS SCREEN NO.1 EFFLUENT GATE SLG-230-02	WIRE TO PANEL DP-100, CIRCUIT #19,21,23	1
P120	1	0.75 INCH	3 - #12	-	1 - #12	-	-	PANEL DP-100	HEADWORKS SCREEN NO.2 INFLUENT GATE SLG-230-03	WIRE TO PANEL DP-100, CIRCUIT #25,27,29	1
P121	1	0.75 INCH	3 - #12	-	1 - #12	-	-	PANEL DP-100	HEADWORKS SCREEN NO.2 EFFLUENT GATE SLG-230-04	WIRE TO PANEL DP-100, CIRCUIT #20,22,24	1
P122	1	0.75 INCH	3 - #12	-	1 - #12	-	-	PANEL DP-100	MAIN CHANNEL GATE SLG-230-05	WIRE TO PANEL DP-100, CIRCUIT #26,28,30	1
P123	1	0.75 INCH	3 - #12	-	1 - #12	-	-	PANEL DP-100	BYPASS CHANNEL GATE SLG-230-06	WIRE TO PANEL DP-100, CIRCUIT #32,34,36	1
P124	1	0.75 INCH	3 - #12	-	1 - #12	-	-	PANEL DP-100	MAIN GATE REMOVAL BASIN EFFLUENT CHANNEL GATE SLG-240-04	WIRE TO PANEL DP-100, CIRCUIT #31,33,35	1
P125	1	0.75 INCH	3 - #12	-	1 - #12	-	-	PANEL DP-100	RAW SEWAGE BYPASS CHANNEL GATE SLG-240-05	WIRE TO PANEL DP-100, CIRCUIT #37,39,41	1
P126	2	2.0 INCH	3 - #1/0	-	1 - #4	-	-	T-ADMIN DS	PANEL ADMIN	-	1
P127	1	2.5 INCH	3 - #2/0	-	1 - #4	-	-	TRANSFORMER T-100	PANEL LP-100	-	1
P128	-	-	-	-	-	-	-	-	-	-	-
P129	-	-	-	-	-	-	-	-	-	-	-
P130	-	-	-	-	-	-	-	-	-	-	-

NOTES:
[1] EQUIPMENT IS PART OF PHASE 2, NOT PART OF THIS SCOPE.

NO.	DATE	BY	REVISION

NOTICE
0 ½ 1
IF THIS BAR DOES NOT MEASURE 1" THEN DRAWING IS NOT TO SCALE

MB
DESIGNED
JL
DRAWN
BP
CHECKED

REGISTERED PROFESSIONAL ENGINEER 86683 OREGON BENJAMIN E. FERRY
Digitally Signed
MAY 08, 2012
EXPIRES: 12-31-2022

WEST YOST
Water. Engineered.

Landis Consulting
ENGINEERING SERVICES
6446 Fairway Ave. SE, Suite 220
Salem, OR 97306
503-584-1576
www.landisconsulting.com

Sweet Home
Oregon at its best!

MAHLER WATER RECLAMATION FACILITY IMPROVEMENTS PROJECT PHASE 1

POWER CONDUIT SCHEDULE 1

PROJECT NO.: 936-50-21-09 | SCALE: AS NOTED | DATE: AUGUST 2022

SHEET
E-020

DocuSign Envelope ID: 09934EE9-0C55-40A3-8631-9C0AF6797111

G:\PROJECTS\103 - West Yost Associates\10332109 - Sweet Home Wwtp Phase 1 Design\Design\(2) Drawings\Current\sweet Home Wwtp Phase 1 Design\Sheets\10332109-E-021 Power Conduit Schedule 2.dwg 10321 09-E-021 Power Conduit
Schedule 2 7/28/2022 6:26 PM JLUTE 24.1s (LMS Tech)

MCC-200 POWER CONDUIT / CONDUCTOR SCHEDULE

CONDUIT ID NO.	CONDUIT		CONDUCTORS PER CONDUIT					FROM	TO	DESCRIPTION	NOTES
	QUANTITY	SIZE	UNGROUNDED	GROUNDED	GROUNDING	CABLE	SPARE				
P202	1	4.0 INCH	-	-	-	-	-	MCC-200	CONDUIT DUCTBANK	POWER CONDUIT TO PRIMARY CLARIFIERS	2
P203	1	4.0 INCH	-	-	-	-	-	MCC-200	CONDUIT DUCTBANK	POWER CONDUIT TO AERATION BASINS	2
P204	1	4.0 INCH	-	-	-	-	-	MCC-200	CONDUIT DUCTBANK	POWER CONDUIT TO ODOR CONTROL	2
P205	1	2.0 INCH	-	-	-	-	-	DP-200	JB-P200	POWER CONDUIT FOR 480V CIRCUITS	3
P206	1	2.0 INCH	-	-	-	-	-	LP-200	JB-P201	POWER CONDUIT FOR 120V CIRCUITS	3
P207	1	2.0 INCH	-	-	-	-	-	LP-200	JB-P201	POWER CONDUIT FOR 120V CIRCUITS	3
P208	1	0.75 INCH	3 - #12	-	1 - #12	-	-	PRIMARY CLARIFIER JUNCTION BOX	PRIMARY CLARIFIER SLUDGE COLLECTOR NO.1 COL-310-10	(FUTURE)	1
P209	1	0.75 INCH	3 - #12	-	1 - #12	-	-	PRIMARY CLARIFIER JUNCTION BOX	PRIMARY CLARIFIER SCUM COLLECTOR NO.1 SKM-310-11	(FUTURE)	1
P210	1	0.75 INCH	3 - #12	-	1 - #12	-	-	PRIMARY CLARIFIER JUNCTION BOX	PRIMARY CLARIFIER SLUDGE COLLECTOR NO.2 COL-310-20	(FUTURE)	1
P211	1	0.75 INCH	3 - #12	-	1 - #12	-	-	PRIMARY CLARIFIER JUNCTION BOX	PRIMARY CLARIFIER SLUDGE COLLECTOR NO.2 SKM-310-21	(FUTURE)	1
P212	1	1.0 INCH	3 - #6	-	1 - #10	-	-	PRIMARY CLARIFIER JUNCTION BOX	PRIMARY SLUDGE PUMP NO.1 PMP-310-01	(FUTURE)	1
P213	1	1.0 INCH	3 - #6	-	1 - #10	-	-	PRIMARY CLARIFIER JUNCTION BOX	PRIMARY SLUDGE PUMP NO.2 PMP-310-02	(FUTURE)	1
P214	1	0.75 INCH	3 - #10	-	1 - #12	-	-	PRIMARY CLARIFIER JUNCTION BOX	PRIMARY SCUM PUMP NO.1 PMP-310-05	(FUTURE)	1
P215	1	1.25 INCH	3 - #4	-	1 - #8	-	-	MCC-200	AERATION BLOWER 1 BLO-310-01	INSTALL CONDUIT, CONDUCTORS SHALL BE PART OF PHASE 2.	1
P216	1	1.25 INCH	3 - #8	-	1 - #10	-	-	MCC-200	AERATION BLOWER 3 BLO-410-03	INSTALL CONDUIT, CONDUCTORS SHALL BE PART OF PHASE 2.	1
P217	1	0.75 INCH	3 - #10	-	1 - #12	-	-	AERATION BASIN JUNCTION BOX	AB1 SWING-N MIXER 1 MIX-420-03	(FUTURE)	1
P218	1	0.75 INCH	3 - #10	-	1 - #12	-	-	AERATION BASIN JUNCTION BOX	AB1 SWING-N MIXER 2 MIX-420-04	(FUTURE)	1
P219	1	1.25 INCH	3 - #4	-	1 - #10	-	-	AERATION BASIN JUNCTION BOX	AB1 IMLR PUMP 1 PMP-430-01	(FUTURE)	1
P220	1	1.25 INCH	3 - #4	-	1 - #10	-	-	AERATION BASIN JUNCTION BOX	AB2 IMLR PUMP 2 PMP-430-02	(FUTURE)	1
P221	1	1.5 INCH	3 - #1	-	1 - #10	-	-	ODOR CONTROL JUNCTION BOX	HEADWORKS ODOR FAN NO.1 BLO-320-01	(FUTURE)	1
P222	1	0.75 INCH	3 - #12	-	1 - #12	-	-	ODOR CONTROL JUNCTION BOX	PRIMARY CLARIFIER ODOR FAN NO.1 BLO-330-01	(FUTURE)	1
P223	1	2.5 INCH	3 - #3/0	-	1 - #6	-	-	MCC-200	MTS-200	-	-
P224	1	2.5 INCH	3 - #3/0	-	1 - #6	-	-	MCC-200	MTS-200	-	-
P225	1	0.75 INCH	3 - #12	-	1 - #12	-	-	PRIMARY CLARIFIER JUNCTION BOX	PRIMARY CLARIFIER SLUDGE COLLECTOR NO.3 COL-310-30	(FUTURE)	1
P226	1	0.75 INCH	3 - #12	-	1 - #12	-	-	PRIMARY CLARIFIER JUNCTION BOX	PRIMARY CLARIFIER SCUM COLLECTOR NO.3 SKM-310-31	(FUTURE)	1
P227	1	1.0 INCH	3 - #10	-	1 - #10	-	-	PRIMARY CLARIFIER JUNCTION BOX	PRIMARY SLUDGE PUMP NO.3 PMP-310-03	(FUTURE)	1
P228	1	1.25 INCH	3 - #4	-	1 - #8	-	-	MCC-200	AERATION BLOWER 2 BLO-410-02	INSTALL CONDUIT, CONDUCTORS SHALL BE PART OF PHASE 2.	1
P229	1	1.25 INCH	3 - #8	-	1 - #10	-	-	MCC-200	AERATION BLOWER 4 BLO-410-04	INSTALL CONDUIT, CONDUCTORS SHALL BE PART OF PHASE 2.	1
P230	1	1.25 INCH	3 - #4	-	1 - #8	-	-	MCC-200	AERATION BLOWER 5 BLO-410-05	INSTALL CONDUIT, CONDUCTORS SHALL BE PART OF PHASE 2.	1
P231	1	1.25 INCH	3 - #4	-	1 - #8	-	-	MCC-200	AERATION BLOWER 6 BLO-410-06	INSTALL CONDUIT, CONDUCTORS SHALL BE PART OF PHASE 2.	1
P232	1	0.75 INCH	3 - #10	-	1 - #12	-	-	AERATION BASIN JUNCTION BOX	AB3 SWING-S MIXER 1 MIX-420-07	(FUTURE)	1
P233	1	1.25 INCH	3 - #4	-	1 - #10	-	-	AERATION BASIN JUNCTION BOX	AB3 IMLR PUMP 2 PMP-430-02	(FUTURE)	1
P240	1	2.5 INCH	3 - #3/0	-	1 - #6	-	-	MTS-200	PANEL DP-200	-	-
P241	1	1.0 INCH	3 - #6	-	1 - #10	-	-	PANEL DP-200	TRANSFORMER T-200	CKT. 1,3,5	-
P242	1	0.75 INCH	3 - #10	-	1 - #10	-	-	PANEL DP-200	GEN-1 BLOCK HEATER	CKT. 2,4,6	-
P243	1	0.75 INCH	3 - #12	-	1 - #12	-	-	PANEL DP-200	MOTORIZED ENTRY GATE	CKT. 7,9,11. INSTALL CONDUIT, CONDUCTORS SHALL BE PART OF PHASE 2.	1
P244	1	0.75 INCH	3 - #8	-	1 - #10	-	-	PANEL DP-200	TRANSFORMER T-210	CKT. 13,15,17 EXISTING BATHROOM PANEL	-
P245	-	-	-	-	-	-	-	-	-	-	-
P246	-	-	-	-	-	-	-	-	-	-	-
P247	-	-	-	-	-	-	-	-	-	-	-
P248	-	-	-	-	-	-	-	-	-	-	-
P249	-	-	-	-	-	-	-	-	-	-	-
P250	1	2.0 INCH	3 - #1	1 - #1	1 - #6	-	-	TRANSFORMER T-200	PANEL LP-200	-	-
P251	1	0.75 INCH	1 - #12	1 - #12	1 - #12	-	-	PANEL LP-200	MEB BUILDING EXTERIOR LIGHTS	CKT. 1	-
P252	1	0.75 INCH	1 - #12	1 - #12	1 - #12	-	-	PANEL LP-200	CONTROL PANEL, CP-200	CKT. 2	-
P253	1	0.75 INCH	1 - #12	1 - #12	1 - #12	-	-	PANEL LP-200	LIGHTS RM. 420	CKT. 3	-
P254	1	0.75 INCH	1 - #12	1 - #12	1 - #12	-	-	PANEL LP-200	GEN-1 BATTERY CHARGER	CKT. 4	-
P255	1	0.75 INCH	1 - #12	1 - #12	1 - #12	-	-	PANEL LP-200	LIGHTS RM. 421	CKT. 5	-
P256	1	0.75 INCH	2 - #12	-	1 - #12	-	-	PANEL LP-200	GEN-1 COOLANT HEATER	CKT. 6,8	-
P257	1	0.75 INCH	1 - #12	1 - #12	1 - #12	-	-	PANEL LP-200	RECEPTACLES RM. 420	CKT. 7	-
P258	1	0.75 INCH	1 - #12	1 - #12	1 - #12	-	-	PANEL LP-200	RECEPTACLES RM. 421 & BUILDING EXTERIOR	CKT. 9	-
P260	1	0.75 INCH	-	-	-	10/3 TRIPLEX AERIAL	-	PANEL LP-200	EXISTING UTILITY POLE LIGHTS	PROVIDE 10/3 AERIAL TRIPLEX CABLE AS SPECIFIED IN 260519.	4
P261	1	0.75 INCH	1 - #12	1 - #12	1 - #12	-	-	PANEL LP-200	ENTRY GATE LIGHT	CKT. 16. WIRE ENTRY GATE LIGHT VIA LIGHT SWITCH IN MEB ELECTRICAL ROOM.	-
P270	1	2.0 INCH	2 - #1/0	-	1 - #6	-	-	TRANSFORMER T-210	EXISTING BATHROOM PANEL	-	-

NOTES:
[1] EQUIPMENT IS PART OF PHASE 2, NOT PART OF THIS SCOPE.
[2] STUB OUT CONDUIT OUTSIDE OF MAIN ELECTRICAL & BLOWER BUILDING CONCRETE PAD. CONDUITS SHALL BE EXTENDED TO THEIR LOCATION AS PART OF PHASE 2.
[3] STUB OUT CONDUIT OUTSIDE OF MAIN ELECTRICAL & BLOWER BUILDING CONCRETE PAD. TERMINATE CONDUIT AT IN-GROUND POWER JUNCTION BOXES AS IDENTIFIED ON THE SITE PLAN.
[4] PROVIDE CONDUIT UNDERGROUND TO POLE #1301-312822. PROVIDE CONDUIT RISER UP TO EXISTING LUMINIARE. EXTEND OVERHEAD WIRING TO POLE #1301-312821.

NO.	DATE	BY	REVISION

NOTICE
0 ½ 1
IF THIS BAR DOES NOT MEASURE 1" THEN DRAWING IS NOT TO SCALE

MB DESIGNED
JL DRAWN
BP CHECKED

REGISTERED PROFESSIONAL ENGINEER 86683 OREGON MAY 08, 2012 BENJAMIN E. PERRY
Digitally Signed
EXPIRES: 12-31-2022

WEST YOST
Water. Engineered.

Landis Consulting
ENGINEERING SERVICES
6446 Fairway Ave. SE, Suite 220
Salem, OR 97306
503-584-1576
www.landisconsulting.com

Sweet Home Oregon at its best!

MAHLER WATER RECLAMATION FACILITY IMPROVEMENTS PROJECT PHASE 1

POWER CONDUIT SCHEDULE 2

PROJECT NO.: 936-50-21-09 | SCALE: AS NOTED | DATE: AUGUST 2022

SHEET
E-021
80 of 135

DocuSign Envelope ID: 09934EE9-0C55-40A3-8631-9C0AF6797111

G:\PROJECTS\103 - West Yost Associates\1032109 - Sweet Home Wwtp Phase 1 Design\Design\(2) Drawings\Current\sweet Home Wwtp Phase 1 Design\Sheets\1032109-E-022 Power Conduit Schedule 3.dwg 1032109-E-022 Power Conduit Schedule 3 7/28/2022 6:28 PM JLUTE 24.1s (LMS Tech)

MCC-300 POWER CONDUIT / CONDUCTOR SCHEDULE

CONDUIT ID NO.	CONDUIT		CONDUCTORS PER CONDUIT					FROM	TO	DESCRIPTION	NOTES
	QUANTITY	SIZE	UNGROUNDED	GROUNDED	GROUNDING	CABLE	SPARE				
P302	1	4.0 INCH	-	-	-	-	-	MCC-300	JB-P303	POWER CONDUIT TO RAS/WAS PUMP STATIONS. ROUTE VIA SST-JB-P302	2
P303	1	4.0 INCH	-	-	-	-	-	MCC-300	JB-P303	POWER CONDUIT TO SECONDARY CLARIFIERS. ROUTE VIA SST-JB-P302	2
P304	1	3.0 INCH	-	-	-	-	-	MCC-300	JB-P303	SPARE POWER CONDUIT. ROUTE VIA SST-JB-P302	2
P305	1	2.0 INCH	-	-	-	-	-	SST-JB-P302	JB-P303	SPARE POWER CONDUIT FOR 480V CIRCUITS	-
P306	1	2.0 INCH	-	-	-	-	-	SST-JB-P302	JB-P303	SPARE POWER CONDUIT FOR 480V CIRCUITS	-
P307	1	2.0 INCH	-	-	-	-	-	SST-JB-P302	JB-P303	SPARE POWER CONDUIT FOR 120V CIRCUITS	-
P308	1	0.75 INCH	3 - #12	-	1 - #10	-	-	MCC-300	SC1 RAS PUMP NO. 1 PMP-430-01	(FUTURE)	1
P309	1	0.75 INCH	3 - #12	-	1 - #10	-	-	MCC-300	SC2 RAS PUMP NO. 3 PMP-430-03	(FUTURE)	1
P310	1	0.75 INCH	3 - #12	-	1 - #12	-	-	MCC-300	SC1 WAS PUMP NO. 1 PMP-430-11	(FUTURE)	1
P311	1	0.75 INCH	3 - #12	-	1 - #12	-	-	MCC-300	SC2 WAS PUMP NO. 3 PMP-430-13	(FUTURE)	1
P312	1	0.75 INCH	3 - #12	-	1 - #12	-	-	MCC-300	SECONDARY CLARIFIER NO. 1 CLA-450-01	(FUTURE)	1
P313	1	1.25 INCH	3 - #3	-	1 - #8	-	-	MCC-300	RDPS PUMP 1 PMP-130-01	(FUTURE)	1
P314	1	1.25 INCH	3 - #3	-	1 - #8	-	-	MCC-300	RDPS PUMP 3 PMP-130-03	(FUTURE)	1
P315	1	1.0 INCH	3 - #6	-	1 - #10	-	-	MCC-300	INFLUENT PS PUMP NO. 1 PMP-110-01	PROVIDE PVC-GRC CONDUIT. ROUTE CONDUIT TO PDP-110-01	3, 4
P316	1	2.0 INCH	3 - #1	-	1 - #6	-	-	MCC-300	INFLUENT PS PUMP NO. 3 PMP-110-03	PROVIDE PVC-GRC CONDUIT. ROUTE CONDUIT TO PDP-110-02	3, 4
P317	1	2.0 INCH	3 - #1	-	1 - #6	-	-	MCC-300	INFLUENT PS PUMP NO. 4 PMP-110-04	PROVIDE PVC-GRC CONDUIT. ROUTE CONDUIT TO PDP-110-02	3, 4
P318	1	2.0 INCH	3 - #1/0	-	1 - #6	-	-	MCC-300	MTS-300	(FUTURE)	1
P319	1	2.0 INCH	3 - #1/0	-	1 - #6	-	-	MCC-300	MTS-300	(FUTURE)	1
P320	1	1.0 INCH	3 - #6	-	1 - #10	-	-	MCC-300	INFLUENT PS PUMP NO. 2 PMP-110-02	PROVIDE PVC-GRC CONDUIT. ROUTE CONDUIT TO PDP-110-01	3, 4
P321	1	2.0 INCH	3 - #1	-	1 - #6	-	-	MCC-300	INFLUENT PS PUMP NO. 5 PMP-110-05	PROVIDE PVC-GRC CONDUIT. ROUTE CONDUIT TO PDP-110-02	3, 4
P322	1	1.25 INCH	3 - #3	-	1 - #8	-	-	MCC-300	RDPS PUMP 2 PMP-130-02	(FUTURE)	1
P323	1	0.75 INCH	3 - #12	-	1 - #10	-	-	MCC-300	SC1 RAS PUMP NO. 2 PMP-430-02	(FUTURE)	1
P324	1	0.75 INCH	3 - #12	-	1 - #10	-	-	MCC-300	SC2 RAS PUMP NO. 4 PMP-430-04	(FUTURE)	1
P325	1	0.75 INCH	3 - #12	-	1 - #12	-	-	MCC-300	SC1 WAS PUMP NO. 2 PMP-430-12	(FUTURE)	1
P326	1	0.75 INCH	3 - #12	-	1 - #12	-	-	MCC-300	SC2 WAS PUMP NO. 4 PMP-430-14	(FUTURE)	1
P327	1	0.75 INCH	3 - #12	-	1 - #12	-	-	MCC-300	SECONDARY CLARIFIER NO. 2 CLA-450-02	(FUTURE)	1
P328	1	2.0 INCH	3 - #1/0	-	1 - #6	-	-	MTS-300	PANEL DP-300	(FUTURE)	1
P329	1	1.0 INCH	3 - #6	-	1 - #10	-	-	PANEL DP-300	TRANSFORMER T-300	(FUTURE)	1
P330	1	0.75 INCH	3 - #12	-	1 - #12	-	-	EXISTING PNL-SDP	INFLUENT ACTUATED GATE SLG-110-00	WIRE TO EXISTING PANEL PNL-SDP. CKT. #26, 28, 30	3
P331	1	0.75 INCH	3 - #12	-	1 - #12	-	-	EXISTING PNL-SDP	UNIT HEATER	WIRE TO EXISTING PANEL PNL-SDP. CKT. #31, 33, 35	-
P332	1	0.75 INCH	3 - #12	-	1 - #12	-	-	EXISTING PNL-SDP	CONDENSING UNIT, CU-1	WIRE TO EXISTING PANEL PNL-SDP. CKT. #32, 34, 36	-
P333	-	-	-	-	-	-	-	-	-	-	-
P334	-	-	-	-	-	-	-	-	-	-	-
P335	-	-	-	-	-	-	-	-	-	-	-
P336	1	1.5 INCH	3 - #2	1 - #2	1 - #8	-	-	TRANSFORMER T-300	PANEL LP-300	(FUTURE)	1
P337	1	0.75 INCH	1 - #12	1 - #12	1 - #12	-	-	EXISTING PNL-L	RECEPTACLE GENERATOR BUILDING	WIRE TO EXISTING PANEL PNL-L. CKT. #2	-
P338	1	0.75 INCH	1 - #12	1 - #12	1 - #12	-	-	EXISTING PNL-L	CP-300	WIRE TO EXISTING PANEL PNL-L, CKT. #14	-
P339	1	0.75 INCH	1 - #12	1 - #12	1 - #12	-	-	EXISTING PNL-L	NIP-300	WIRE TO EXISTING PANEL PNL-L, CKT. #16	-
P340	1	0.75 INCH	1 - #12	1 - #12	1 - #12	-	-	EXISTING PNL-L	PDP-110-01	WIRE TO EXISTING PANEL PNL-L, CKT. #17 120VAC POWER FOR RECEPTACLE & HEATER	3
P341	1	0.75 INCH	1 - #12	1 - #12	1 - #12	-	-	EXISTING PNL-L	MNP-100	WIRE TO EXISTING PANEL PNL-L, CKT. #18	-
P342	1	0.75 INCH	1 - #12	1 - #12	1 - #12	-	-	EXISTING PNL-L	PDP-110-02	WIRE TO EXISTING PANEL PNL-L, CKT. #19 120VAC POWER FOR HEATER	3
P343	1	0.75 INCH	1 - #12	1 - #12	1 - #12	-	-	EXISTING PNL-L	PDP-110-03	WIRE TO EXISTING PANEL PNL-L, CKT. #21 120VAC POWER FOR ISR/ISB, HEATER, & RECEPTACLE	3
P344	1	0.75 INCH	1 - #12	1 - #12	1 - #12	-	-	EXISTING PNL-L	IPS LIGHTS	WIRE TO EXISTING PANEL PNL-L, CKT. 23 PROVIDE SWITCH AT PDP-110-03.	3
P345	1	0.75 INCH	3 - #8	-	1 - #10	-	-	EXISTING PNL-L	FC-1	WIRE TO EXISTING PANEL PNL-L, CKT. #29, 31, 33	-
P346	-	-	-	-	-	-	-	-	-	-	-
P347	-	-	-	-	-	-	-	-	-	-	-
P348	-	-	-	-	-	-	-	-	-	-	-
P349	-	-	-	-	-	-	-	-	-	-	-
P350	-	-	-	-	-	-	-	-	-	-	-

NOTES:
[1] EQUIPMENT IS PART OF PHASE 2, NOT PART OF THIS SCOPE.
[2] STUB OUT CONDUIT OUTSIDE OF EXISTING ELECTRICAL BUILDING AND TERMINATE CONDUIT AT IN-GROUND POWER JUNCTION BOXES AS IDENTIFIED ON THE SITE PLAN.
[3] ROUTE CONDUIT VIA JUNCTION BOX, SST-JB-P303.
[4] TERMINATE CONDUCTORS AT THE PUMP DISCONNECT PANEL AND ROUTE MSC TO THE PUMP VIA THE CABLE TRAY. SEE DRAWING E-112 FOR REFERENCE.

NO.	DATE	BY	REVISION

NOTICE
0 ½ 1
IF THIS BAR DOES NOT MEASURE 1" THEN DRAWING IS NOT TO SCALE

MB DESIGNED
JL DRAWN
BP CHECKED

REGISTERED PROFESSIONAL ENGINEER 86683 OREGON MAY 08, 2012 BENJAMIN E. PERRY
Digitally Signed
EXPIRES: 12-31-2022

WEST YOST
Water. Engineered.

Landis Consulting
ENGINEERING SERVICES
6446 Fairway Ave. SE, Suite 220
Salem, OR 97306
503-584-1576
www.landisconsulting.com

Sweet Home Oregon at its best!

MAHLER WATER RECLAMATION FACILITY IMPROVEMENTS PROJECT PHASE 1

POWER CONDUIT SCHEDULE 3

PROJECT NO.: 936-50-21-09 | SCALE: AS NOTED | DATE: AUGUST 2022

SHEET
E-022

DocuSign Envelope ID: 09934EE9-0C55-40A3-8631-9C0AF6797111

G:\PROJECTS\103 - West Yost Associates\1032109 - Sweet Home Wwtp Phase 1 Design\Design\(2) Drawings\Current\sweet Home Wwtp Phase 1 Design\Sheets\1032109-E-024 Grounding Conduit Schedule.dwg 1032109-E-024 Grounding Conduit Schedule 7/28/2022 5:53 PM JLUTE 24.1s (LMS Tech)

GROUNDING CONDUIT / CONDUCTOR SCHEDULE

CONDUIT ID NO.	CONDUIT		CONDUCTORS PER CONDUIT					FROM	TO	DESCRIPTION	NOTES
	QUANTITY	SIZE	UNGROUNDED	GROUNDED	GROUNDING	CABLE	SPARE				
G001	1	1.0 INCH	-	-	1 - #3/0	-	-	SMSB-1	GROUNDING ELECTRODE SYSTEM	-	2
G002	1	1.0 INCH	-	-	1 - #3/0	-	-	GENSET, GEN-1	GROUNDING ELECTRODE SYSTEM	-	2
G100	1	1.0 INCH	-	-	-	-	-	MCC-100	GROUNDING ELECTRODE SYSTEM	(FUTURE)	1
G101	1	1.0 INCH	-	-	-	-	-	TRANSFORMER T-ADMIN	GROUNDING ELECTRODE SYSTEM	(FUTURE)	1
G102	1	1.0 INCH	-	-	-	-	-	TRANSFORMER T-100	GROUNDING ELECTRODE SYSTEM	(FUTURE)	1
G201	1	1.0 INCH	-	-	1 - #6	-	-	TRANSFORMER T-200	GROUNDING ELECTRODE SYSTEM	-	2
G210	1	1.0 INCH	-	-	1 - #6	-	-	TRANSFORMER T-210	GROUNDING ELECTRODE SYSTEM	-	2
G300	1	1.0 INCH	-	-	1 - #2/0	-	-	MCC-300	GROUNDING ELECTRODE SYSTEM	-	2
G301	1	1.0 INCH	-	-	-	-	-	TRANSFORMER T-300	GROUNDING ELECTRODE SYSTEM	(FUTURE)	1
G400	1	1.0 INCH	-	-	-	-	-	MCC-400	GROUNDING ELECTRODE SYSTEM	(FUTURE)	1
G401	1	1.0 INCH	-	-	-	-	-	TRANSFORMER T-400	GROUNDING ELECTRODE SYSTEM	(FUTURE)	1

NOTES:
[1] EQUIPMENT IS PART OF PHASE 2, NOT PART OF THIS SCOPE.
[2] ROUTE GROUNDING ELECTRODE CONDUCTOR IN PVC CONDUIT.

NO.	DATE	BY	REVISION

NOTICE
0 ½ 1
IF THIS BAR DOES NOT MEASURE 1" THEN DRAWING IS NOT TO SCALE

MB
DESIGNED
JL
DRAWN
BP
CHECKED

REGISTERED PROFESSIONAL ENGINEER 86683 Digitally Signed OREGON MAY 08, 2012 BENJAMIN E. PERRY
EXPIRES: 12-31-2022

WEST YOST
Water. Engineered.

Landis Consulting
ENGINEERING SERVICES
6446 Fairway Ave. SE, Suite 220
Salem, OR 97306
503-584-1576
www.landisconsulting.com

Sweet Home Oregon at its best!

MAHLER WATER RECLAMATION FACILITY IMPROVEMENTS PROJECT PHASE 1

GROUNDING CONDUIT SCHEDULE

PROJECT NO.: 936-50-21-09 | SCALE: AS NOTED | DATE: AUGUST 2022

SHEET
E-024
82 of 135

DocuSign Envelope ID: 09934EE9-0C55-40A3-8631-9C0AF6797111

G:\PROJECTS\103 - West Yost Associates\1032109 - Sweet Home Wwtp Phase 1 Design\Design\(2) Drawings\Current\sweet Home Wwtp Phase 1 Design\Sheets\E-025 Control Conduit Schedule 1.dwg E-025 Control Conduit Schedule 1
7/28/2022 5:53 PM JLUTE 24.1s (LMS Tech)

SERVICE ENTRANCE CONTROL CONDUIT / CONDUCTOR SCHEDULE

CONDUIT ID NO.	CONDUIT		CONDUCTORS PER CONDUIT					FROM	TO	DESCRIPTION	NOTES
	QUANTITY	SIZE	UNGROUNDED	GROUNDED	GROUNDING	CABLE	SPARE				
C001A	1	4.0 INCH	-	-	-	-	-	COMMUNICATIONS UTILITY	MNP-100 (PH2 LOCATION)	INSTALL PER UTILITY REQUIREMENTS	5
C001B	1	4.0 INCH	-	-	-	-	-	COMMUNICATIONS UTILITY	MNP-100 (PH2 LOCATION)	INSTALL PER UTILITY REQUIREMENTS	5
C001	1	0.75 INCH	-	-	1 - #14	1 - CAT6	-	SMSB-1	NIP-200	POWER MONITOR E/IP CONNECTION	1
C002	1	0.75 INCH	2 - #14	-	1 - #14	-	-	GEN-1	MSB-1	GENERATOR TO ATS REMOTE START	-
C003	1	0.75 INCH	-	-	1 - #14	1 - CAT6	-	GEN-1	NIP-200	GENERATOR E/IP CONNECTION	1
C004	1	0.75 INCH	2 - #14	-	1 - #14	-	-	GEN-1	GEN-1 E-STOP PUSHBUTTON	EMERGENCY STOP PUSHBUTTON LOCATED IN MEB ELECTRICAL ROOM.	-
C005	1	0.75 INCH	-	-	1 - #14	1 - CAT6	-	MSB-1	NIP-200	ATS E/IP CONNECTION	1
C006	1	1.0 INCH	-	-	1 - #14	3 - TSP	-	MSB-1	AHF-1	ACTIVE HARMONIC FILTER CT's	-
C007	1	1.0 INCH	-	-	1 - #14	3 - TSP	-	MSB-1	AHF-2	ACTIVE HARMONIC FILTER CT's	-
C008	1	0.75 INCH	-	-	1 - #14	1 - CAT6	-	AHF-1	NIP-200	ACTIVE HARMONIC FILTER E/IP CONNECTION	1
C009	1	0.75 INCH	-	-	1 - #14	1 - CAT6	-	AHF-2	NIP-200	ACTIVE HARMONIC FILTER E/IP CONNECTION	1
C010	-	-	-	-	-	-	-	-	-	-	-
C011	1	2.0 INCH	-	-	1 - #14	1 - FIBER (12STR)	-	MNP-100	NIP-100	(FUTURE) NOT PART OF PHASE 1 SCOPE	-
C012	1	2.0 INCH	-	-	1 - #14	1 - FIBER (12STR)	-	MNP-100 (PH2 LOCATION)	NIP-200	-	2
C013	1	2.0 INCH	-	-	1 - #14	1 - FIBER (12STR)	-	MNP-100 (PH2 LOCATION)	NIP-300	-	3
C013A	1	1.0 INCH	-	-	1 - #14	1 - FIBER (12STR)	-	MNP-100 (TEMP. LOCATION)	NIP-300	-	4
C014	1	2.0 INCH	-	-	1 - #14	1 - FIBER (12STR)	-	MNP-100	NIP-400	(FUTURE) NOT PART OF PHASE 1 SCOPE	-
C015	1	2.0 INCH	-	-	-	-	-	MNP-100 (PH2 LOCATION)	NIP-300	SPARE CONDUIT	3
C016	-	-	-	-	-	-	-	-	-	-	-
C017	-	-	-	-	-	-	-	-	-	-	-
C018	-	-	-	-	-	-	-	-	-	-	-
C019	-	-	-	-	-	-	-	-	-	-	-
C020	-	-	-	-	-	-	-	-	-	-	-

NOTES:
[1] EQUIPMENT IS PART OF PHASE 2, NOT PART OF THIS SCOPE. PROVIDE CONDUIT AND STUB UP AT THE DESIGNATED LOCATION. PROVIDE PULL STRING IN CONDUIT.
[2] MNP-100 SHALL BE LOCATED IN THE ADMIN BUILDING AS PART OF PHASE 2. STUB OUT CONDUIT OUTSIDE OF MEB BUILDING CONCRETE PAD AS IDENTIFIED ON E-102. CONDUITS SHALL BE EXTENDED TO THEIR LOCATION AS PART OF PHASE 2.
[3] MNP-100 SHALL BE LOCATED IN THE ADMIN BUILDING AS PART OF PHASE 2. PROVIDE CONDUIT AS IDENTIFIED ON E-102 FROM THE EXISTING ELECTRICAL BUILDING TO THE STUB-OUT LOCATION NEAR THE APPROXIMATE LOCATION OF THE FUTURE FIBER CONDUIT. CONDUCTORS SHALL BE PROVIDED AS PART OF PHASE 2.
[4] MNP-100 IS TEMPORARILY LOCATED IN THE EXISTING ELECTRICAL BUILDING. PROVIDE CONDUIT FOR FIBER IN TEMPORARY LOCATION.

MAIN ELECTRICAL & BLOWER BUILDING CONTROL CONDUIT / CONDUCTOR SCHEDULE

CONDUIT ID NO.	CONDUIT		CONDUCTORS PER CONDUIT					FROM	TO	DESCRIPTION	NOTES
	QUANTITY	SIZE	UNGROUNDED	GROUNDED	GROUNDING	CABLE	SPARE				
C200	1	1.0 INCH	-	-	1 - #14	3 - CAT6	-	NIP-200	CP-200	(FUTURE) ETHERNET / IP & SCADA CONNECTION	1
C201	1	1.0 INCH	-	-	1 - #14	1 - CAT6	-	NIP-200	MCC-200	(FUTURE) ETHERNET / IP CONNECTION	1
C202	1	1.0 INCH	-	-	-	-	-	CP-200	GEN-1	(FUTURE) ETHERNET / IP CONNECTION	1
C203	1	2.0 INCH	-	-	-	-	-	NIP-200	JB-S400	ROUTE CONDUIT UNDERGROUND. PROVIDE PULL STRING.	-
C204	1	2.0 INCH	-	-	-	-	-	CP-200	JB-C400	ROUTE CONDUIT UNDERGROUND. PROVIDE PULL STRING.	-
C205	1	2.0 INCH	-	-	-	-	-	MCC-200	JB-C400	ROUTE CONDUIT UNDERGROUND. PROVIDE PULL STRING.	-
C206	1	2.0 INCH	-	-	-	-	-	CP-200	CONDUIT DUCTBANK	(FUTURE) CONTROL CONDUITS TO PRIMARY CLARIFIERS	2
C207	1	2.0 INCH	-	-	-	-	-	MCC-200	CONDUIT DUCTBANK	(FUTURE) CONTROL CONDUITS TO PRIMARY CLARIFIERS	2
C208	1	2.0 INCH	-	-	-	-	-	NIP-200	CONDUIT DUCTBANK	(FUTURE) NETWORK CONDUITS TO PRIMARY CLARIFIERS	2
C209	1	2.0 INCH	-	-	-	-	-	NIP-200	CONDUIT DUCTBANK	(FUTURE) NETWORK CONDUITS TO PRIMARY CLARIFIERS	2
C210	1	2.0 INCH	-	-	-	-	-	CP-200	CONDUIT DUCTBANK	(FUTURE) CONTROL CONDUITS TO AERATION BLOWERS	2
C211	1	2.0 INCH	-	-	-	-	-	MCC-200	CONDUIT DUCTBANK	(FUTURE) CONTROL CONDUITS TO AERATION BLOWERS	2
C212	1	2.0 INCH	-	-	-	-	-	NIP-200	CONDUIT DUCTBANK	(FUTURE) NETWORK CONDUITS TO AERATION BLOWERS	2
C213	1	2.0 INCH	-	-	-	-	-	NIP-200	CONDUIT DUCTBANK	(FUTURE) NETWORK CONDUITS TO AERATION BLOWERS	2
C214	1	2.0 INCH	-	-	-	-	-	CP-200	CONDUIT DUCTBANK	(FUTURE) CONTROL CONDUITS TO ODOR CONTROL	2
C215	1	2.0 INCH	-	-	-	-	-	MCC-200	CONDUIT DUCTBANK	(FUTURE) CONTROL CONDUITS TO ODOR CONTROL	2
C216	1	2.0 INCH	-	-	-	-	-	NIP-200	CONDUIT DUCTBANK	(FUTURE) NETWORK CONDUITS TO ODOR CONTROL	2
C217	1	2.0 INCH	-	-	-	-	-	NIP-200	CONDUIT DUCTBANK	(FUTURE) NETWORK CONDUITS TO ODOR CONTROL	2
C218	-	-	-	-	-	-	-	-	-	-	-
C219	-	-	-	-	-	-	-	-	-	-	-

NOTES:
[1] EQUIPMENT IS PART OF PHASE 2, NOT PART OF THIS SCOPE. PROVIDE CONDUIT AND STUB UP AT THE DESIGNATED LOCATION. PROVIDE PULL STRING IN CONDUIT AND CAP.
[2] STUB OUT CONDUIT OUTSIDE OF MEB BUILDING CONCRETE PAD. CONDUITS SHALL BE EXTENDED TO THEIR LOCATION AS PART OF PHASE 2.

NO.	DATE	BY	REVISION

NOTICE
0 ½ 1
IF THIS BAR DOES NOT MEASURE 1" THEN DRAWING IS NOT TO SCALE

MB
DESIGNED
JL
DRAWN
BP
CHECKED

REGISTERED PROFESSIONAL ENGINEER 86683 OREGON MAY 08, 2012 BENJAMIN E. PERRY
Digitally Signed
EXPIRES: 12-31-2022

WEST YOST
Water. Engineered.

Landis Consulting
ENGINEERING SERVICES
6446 Fairway Ave. SE, Suite 220
Salem, OR 97306
503-584-1576
www.landisconsulting.com

Sweet Home
Oregon at its best!

MAHLER WATER RECLAMATION FACILITY IMPROVEMENTS PROJECT PHASE 1

CONTROL CONDUIT SCHEDULE 1

PROJECT NO.: 936-50-21-09 | SCALE: AS NOTED | DATE: AUGUST 2022

SHEET
E-025
83 of 135

DocuSign Envelope ID: 09934EE9-0C55-40A3-8631-9C0AF6797111

G:\PROJECTS\103 - West Yost Associates\1032109 - Sweet Home Wwtp Phase 1 Design\Design\(2) Drawings\Current\sweet Home Wwtp Phase 1 Design\Sheets\E-026 Control Conduit Schedule 2.dwg E-026 Control Conduit Schedule 2
7/28/2022 6:32 PM JLUTE 24.1s (LMS Tech)

EXISTING ELECTRICAL BUILDING CONTROL CONDUIT / CONDUCTOR SCHEDULE

CONDUIT ID NO.	CONDUIT		CONDUCTORS PER CONDUIT					FROM	TO	DESCRIPTION	NOTES
	QUANTITY	SIZE	UNGROUNDED	GROUNDED	GROUNDING	CABLE	SPARE				
C300	1	0.75 INCH	-	-	1 - #14	3 - CAT6	-	NIP-300	CP-300	ETHERNET / IP & SCADA CONNECTION	-
C301	1	0.75 INCH	-	-	1 - #14	1 - CAT6	-	NIP-300	MCC-300	ETHERNET / IP CONNECTION	-
C302A	1	2.0 INCH	6 - #14	-	3 - #14	-	-	CP-300	JB-C301	SEE CONDUITS C323, C325, AND C327.	2
C302B	1	2.0 INCH	-	-	1 - #14	1 - TSP	-	CP-300	JB-C301	SEE CONDUIT C322.	2
C302C	1	2.0 INCH	-	-	-	-	-	CP-300	JB-C301	(FUTURE) CONDUIT	1, 2
C303A	1	2.0 INCH	-	-	3 - #14	3 - CAT6	-	NIP-300	SST-JB-S301	SEE CONDUITS C305, C324, C326.	2
C303B	1	2.0 INCH	-	-	-	-	-	NIP-300	SST-JB-S301	(FUTURE) CONDUIT	1, 2
C304	1	4.0 INCH	-	-	-	-	-	MCC-300	JB-C301	(FUTURE) CONDUIT	2
C305	1	1.0 INCH	-	-	1 - #14	1 - CAT6	-	NIP-300	SLG-110-00	IPS SLIDE GATE ETHERNET/IP CONNECTION	2
C306	1	1.0 INCH	-	-	1 - #14	1 - TSP	-	MCC-300	PDP-110-01	PUMP PMP-110-01 FLS SENSOR (OVERTEMP & LEAKAGE)	2
C307	1	1.0 INCH	-	-	1 - #14	1 - TRIAD	-	MCC-300	PDP-110-01	PUMP PMP-110-01 SPEED SETPOINT	2
C308	1	1.0 INCH	14 - #14	-	1 - #14	-	-	MCC-300	PDP-110-01	PUMP PMP-110-01 LCS CONTROL DEVICES (2-#14's ARE SPARE)	2,3
C309	1	1.0 INCH	-	-	1 - #14	1 - TSP	-	MCC-300	PDP-110-01	PUMP PMP-110-02 FLS SENSOR (OVERTEMP & LEAKAGE)	2
C310	1	1.0 INCH	-	-	1 - #14	1 - TRIAD	-	MCC-300	PDP-110-01	PUMP PMP-110-02 SPEED SETPOINT	2
C311	1	1.0 INCH	14 - #14	-	1 - #14	-	-	MCC-300	PDP-110-01	PUMP PMP-110-02 LCS CONTROL DEVICES (2-#14's ARE SPARE)	2,3
C312	1	1.0 INCH	-	-	1 - #14	1 - TSP	-	MCC-300	PDP-110-02	PUMP PMP-110-03 FLS SENSOR (OVERTEMP & LEAKAGE)	2
C313	1	1.0 INCH	-	-	1 - #14	1 - TRIAD	-	MCC-300	PDP-110-02	PUMP PMP-110-03 SPEED SETPOINT	2
C314	1	1.0 INCH	18 - #14	-	1 - #14	-	-	MCC-300	PDP-110-02	PUMP PMP-110-03 LCS CONTROL DEVICES (2-#14's ARE SPARE)	2,3
C315	1	1.0 INCH	-	-	1 - #14	1 - TSP	-	MCC-300	PDP-110-02	PUMP PMP-110-04 FLS SENSOR (OVERTEMP & LEAKAGE)	2
C316	1	1.0 INCH	-	-	1 - #14	1 - TRIAD	-	MCC-300	PDP-110-02	PUMP PMP-110-04 SPEED SETPOINT	2
C317	1	1.0 INCH	18 - #14	-	1 - #14	-	-	MCC-300	PDP-110-02	PUMP PMP-110-04 LCS CONTROL DEVICES (2-#14's ARE SPARE)	2,3
C318	1	1.0 INCH	-	-	1 - #14	1 - TSP	-	MCC-300	PDP-110-02	PUMP PMP-110-05 FLS SENSOR (OVERTEMP & LEAKAGE)	2
C319	1	1.0 INCH	-	-	1 - #14	1 - TRIAD	-	MCC-300	PDP-110-02	PUMP PMP-110-05 SPEED SETPOINT	2
C320	1	1.0 INCH	16 - #14	-	1 - #14	-	-	MCC-300	PDP-110-02	PUMP PMP-110-05 LCS CONTROL DEVICES (2-#14's ARE SPARE)	2,3
C321	1	1.0 INCH	10 - #14	-	1 - #14	-	-	MCC-300	PDP-110-03	WET WELL FLOAT SWITCHES LSH-110-01 & LSHH-110-02. SEE DRAWING E-906.	2
C322	1	1.0 INCH	-	-	1 - #14	1 - TSP	-	CP-300	PDP-110-03	WET WELL LEVEL SENSOR, LE/LIT-110-05 (24VDC LOOP POWERED)	-
C323	1	0.75 INCH	2 - #14	-	1 - #14	-	-	CP-300	FE/FIT-110-11	INTEGRAL FLOWMETER TRANSMITTER (24VDC POWER)	-
C324	1	0.75 INCH	-	-	1 - #14	1 - CAT6	-	NIP-300	FE/FIT-110-11	FLOWMETER ETHERNET / IP CONNECTION	-
C325	1	0.75 INCH	2 - #14	-	1 - #14	-	-	CP-300	FE/FIT-110-12	INTEGRAL FLOWMETER TRANSMITTER (24VDC POWER)	-
C326	1	0.75 INCH	-	-	1 - #14	1 - CAT6	-	NIP-300	FE/FIT-110-12	FLOWMETER ETHERNET / IP CONNECTION	-
C327	1	0.75 INCH	2 - #14	-	1 - #14	-	-	CP-300	OVERFLOW MANHOLE	LSH-110-03, OVERFLOW MANHOLE FLOAT SWITCH	4
C328	-	-	-	-	-	-	-	-	-	-	-
C329	-	-	-	-	-	-	-	-	-	-	-
C330	-	-	-	-	-	-	-	-	-	-	-
C331	-	-	-	-	-	-	-	-	-	-	-
C332	-	-	-	-	-	-	-	-	-	-	-
C333	-	-	-	-	-	-	-	-	-	-	-
C334	-	-	-	-	-	-	-	-	-	-	-

NOTES:
[1] EQUIPMENT IS PART OF PHASE 2, NOT PART OF THIS SCOPE. PROVIDE CONDUIT AND STUB UP AT THE DESIGNATED LOCATION. PROVIDE PULL STRING IN CONDUIT AND CAP.
[2] ROUTE CONDUIT VIA SST-JB-C300.
[3] SEE MOTOR CONTROL SCHEMATICS STARTING AT DRAWING E-900 FOR DETAILS ON CONTROL DEVICES.
[4] ROUTE CONDUIT VIA PDP-110-03 BACK TO CP-300. TERMINATE CONDUCTORS ON INTRINSICALLY SAFE RELAY ISR-110-04 INSIDE PDP-110-03 BEFORE ROUTING BACK TO CP-300.

NO.	DATE	BY	REVISION

NOTICE
0 ½ 1
IF THIS BAR DOES NOT MEASURE 1" THEN DRAWING IS NOT TO SCALE

MB DESIGNED
JL DRAWN
BP CHECKED

REGISTERED PROFESSIONAL ENGINEER 86683 Digitally Signed OREGON MAY 08, 2012 BENJAMIN E. PERRY
EXPIRES: 12-31-2022

WEST YOST Water. Engineered.

Landis Consulting
ENGINEERING SERVICES
6446 Fairway Ave. SE, Suite 220
Salem, OR 97306
503-584-1576
www.landisconsulting.com

Sweet Home Oregon at its best!

MAHLER WATER RECLAMATION FACILITY IMPROVEMENTS PROJECT PHASE 1

CONTROL CONDUIT SCHEDULE 2

PROJECT NO.: 936-50-21-09 | SCALE: AS NOTED | DATE: AUGUST 2022

SHEET
E-026

DocuSign Envelope ID: 09934EE9-0C55-40A3-8631-9C0AF6797111

G:\PROJECTS\103 - West Yost Associates\10321109 - Sweet Home Wwtp Phase 1 Design\Design\(2) Drawings\Current\sweet Home Wwtp Phase 1 Design\Sheets\E-027 Mechanical & Luminaire Schedule.dwg E-027 Mechanical & Luminaire
Schedule 7/28/2022 5:52 PM JLUTE 24.1s (LMS Tech)

MECHANICAL EQUIPMENT CONNECTION SCHEDULE

EQUIPMENT	TAG	SHEET REF	ELECTRICAL								CONDUIT		CONDUCTORS			PANEL	CIRCUIT	LOCAL DISCONNECT	DISCONNECT RATING	NOTES
			VOLTAGE	PHASE	MCA	MOCP	HP	WATTS	FLA	FLA @ 125%	QTY	SIZE	UNGROUNDED	GROUNDED	GROUNDING					
AIR HANDLING UNIT	AHU-1	E-104	480	3	19	25	-	-	-	-	1	0.75 INCH	3 - #10	-	1 - #10	DP-200	8,10,12	Yes	30 AS	1
MEB BUILDING CONDENSING UNIT	CU-1	E-102	480	3	14	20	-	-	-	-	1	0.75 INCH	3 - #12	-	1 - #12	DP-200	14,16,18	Yes	30 AS	1
EXHAUST FAN	EF-1	E-104	208	3	-	-	2	-	-	-	1	0.75 INCH	3 - #12	-	1 - #12	LP-200	10,12,14	No	-	-
EXISTING ELECTRICAL ROOM CONDENSING UNIT	CU-1	E-106	480	3	8	15	-	-	-	-	1	0.75 INCH	3 - #12	-	1 - #12	PNL-SPD	32,34,36	Yes	30 AS	1
FAN COIL UNIT	FC-1	E-106	208	3	31	35	-	-	-	-	1	0.75 INCH	3 - #8	-	1 - #10	PNL-L	28,30,32	No	-	-
UNIT HEATER	UH-1	E-104	208	1	11.3	15	-	-	-	-	1	0.75 INCH	2 - #12	-	1 - #12	LP-200	13,15	Yes	30 AS	1
-	-	-	-	-	-	-	-	-	-	-	-	-	-	-	-	-	-	-	-	-
-	-	-	-	-	-	-	-	-	-	-	-	-	-	-	-	-	-	-	-	-

NOTES:
[1] PROVIDE FUSED DISCONNECT SWITCH. FUSE RATING SHALL MATCH MOCP RATING.

INTERIOR LUMINAIRE SCHEDULE

FIXTURE NO.	DESCRIPTION	LAMP TYPE	LUMEN OUTPUT	CRI	COLOR TEMP.	DRIVER	EMERGENCY DRIVER	INTEGRAL MOTION/PHOTO SENSOR	VOLTS	LOAD	MANUFACTURER	MODEL NUMBER
E1	SURFACE MOUNTED EMERGENCY BATTERY PACK WITH THERMOPLASTIC HOUSING, INTEGRAL TEST SWITCH, ADJUSTABLE HEADS, AND WHITE FINISH.	LED	1,100 LM	N/A	N/A	N/A	N/A	N/A	UNV	11 WATT	LITHONIA DUAL LITE EVENLITE	ELM6L SERIES EVHC SERIES TELESIS TEBL6 SERIES
V4	CHAIN MOUNTED 48" x 7" x 6" VAPOR TIGHT LUMINAIRE WITH FIBERGLASS HOUSING, GASKETED FROSTED POLYCARBONATE LENS, STAINLESS STEEL LATCHES, AND WET LOCATION LISTED AND LABEL. PROVIDE 36" CHAIN MOUNT KIT AND BRACKETS.	LED	6,000 LM	80	4000K	STANDARD 0-10V	NO	NO	UNV	49 WATT	LITHONIA	VAP LED
X1	SINGLE FACE EXIT SIGN WITH THERMOPLASTIC HOUSING, SURFACE MOUNTED AS SHOWN ON THE DRAWINGS, LETTERS SHALL BE RED, UL 924 LISTED, INTEGRAL BATTERY, SELF DIAGNOSTICS TEST BUTTON AND DAMP LOCATION LISTED. TWIN, LED INDOOR REMOTE HEAD LAMPS TO OPERATE IN EMERGENCY MODE.	LED	N/A	N/A	N/A	N/A	YES	NO	UNV	1 WATT	LITHONIA	LHQM LED R HO ELA T Q L0309 SD SERIES

EXTERIOR LUMINAIRE SCHEDULE

FIXTURE NO.	DESCRIPTION	LAMP TYPE	LUMENS	CRI	COLOR TEMP.	DRIVER	EMERGENCY DRIVER	INTEGRAL MOTION/PHOTO SENSOR	VOLTS	LOAD	MANUFACTURER	MODEL NUMBER
S1	21.8"L x 13.3"W x 7.2"H SITE LUMINAIRE WITH DIE-CAST ALUMINUM HOUSING, SINGLE HEAD, TYPE IV DISTRIBUTION, INTEGRAL SURGE PROTECTION, 0-10V DIMMING DRIVER, AND BLACK FINISH. PROVIDE SQUARE POLE MOUNTING ARM. LUMINAIRE SHALL BE MOUNTED ON 25' HIGH X 4" SQUARE 0.12" THICK STEEL POLE WITH HAND HOLE AND BLACK FINISH. CONTRACTOR SHALL BE RESPONSIBLE FOR DETERMINING THE POLE STYLE TOP AND POLE DRILL PATTERN BASED ON THE NUMBER OF LUMINAIRE HEADS BEING PROVIDED ON THE POLES. CONTRACTOR SHALL BE RESPONSIBLE FOR PROVIDING ANCHOR BOLTS PER THE MANUFACTURER'S INSTALLATION REQUIREMENTS.	LED	9,972 LM	70	4000K	STANDARD 0-10V	NO	YES	UNV	72 WATTS	LITHONIA	RSX1 SERIES
S2	21.8"L x 13.3"W x 7.2"H SITE LUMINAIRE WITH DIE-CAST ALUMINUM HOUSING, SINGLE HEAD, TYPE IV DISTRIBUTION, INTEGRAL SURGE PROTECTION, 0-10V DIMMING DRIVER, AND BLACK FINISH. PROVIDE SQUARE POLE MOUNTING ARM. LUMINAIRE SHALL BE MOUNTED ON 16' HIGH X 4" SQUARE 0.12" THICK STEEL POLE WITH HAND HOLE AND BLACK FINISH. CONTRACTOR SHALL BE RESPONSIBLE FOR DETERMINING THE POLE STYLE TOP AND POLE DRILL PATTERN BASED ON THE NUMBER OF LUMINAIRE HEADS BEING PROVIDED ON THE POLES. CONTRACTOR SHALL BE RESPONSIBLE FOR PROVIDING ANCHOR BOLTS PER THE MANUFACTURER'S INSTALLATION REQUIREMENTS.	LED	7,189 LM	70	4000K	STANDARD 0-10V	NO	YES	UNV	51 WATTS	LITHONIA	RSX1 SERIES
W2	EXTERIOR WALL MOUNTED 7"L x 11.5"W x 9"H TRAPEZOID LUMINAIRE WITH SINGLE PIECE DIE-CAST ALUMINUM HOUSING, TYPE III OPTICS, 350 mA DRIVE CURRENT, BLACK FINISH, BATTERY PACK WITH BACK BOX, MOTION SENSOR FOR DIMMING WITH INTEGRAL PHOTOCELL, TAMPER RESISTANT HARDWARE, AND WET LOCATION LISTED. WHEN MOUNTED ON SPLIT FACE BLOCK CONTRACTOR SHALL SEAL AROUND ANY OPENING BETWEEN ELECTRICAL BOX AND LUMINAIRE WITH A SILICONE SEALANT WHICH MATCHES THE COLOR OF THE BLOCK. WHEN MOUNTED ON METAL SIDING CONTRACTOR SHALL MOUNT ELECTRICAL BOX ON FLAT PART OF THE SIDING AND BOX SHALL EXTEND BEYOND SIDING A DISTANCE EQUAL TO THE RIBBING ON THE SIDING SO THE LUMINAIRE SEALS PROPERLY AGAINST THE BOX. CONTRACTOR SHALL PROVIDE SILICONE SEALANT AROUND OPENING IN SIDING & ELECTRICAL BOX FOR PROPER SEALING.	LED	3,063 LM	70	3000K	STANDARD 0-10V	YES	YES	UNV	32 WATTS	ACUITY	WDGE2 LED SERIES

NO.	DATE	BY	REVISION

NOTICE
0 ½ 1
IF THIS BAR DOES NOT MEASURE 1" THEN DRAWING IS NOT TO SCALE

MB
DESIGNED
JL
DRAWN
BP
CHECKED

REGISTERED PROFESSIONAL ENGINEER 86683 OREGON BENJAMIN E. PERRY
Digitally Signed
MAY 08, 2012
EXPIRES: 12-31-2022

WEST YOST
Water. Engineered.

Landis Consulting
ENGINEERING SERVICES
6446 Fairway Ave. SE, Suite 220
Salem, OR 97306
503-584-1576
www.landisconsulting.com

Sweet Home Oregon at its best!

MAHLER WATER RECLAMATION FACILITY IMPROVEMENTS PROJECT PHASE 1

MECHANICAL & LUMINAIRE SCHEDULE

PROJECT NO.: 936-50-21-09 | SCALE: AS NOTED | DATE: AUGUST 2022

SHEET
E-027

DocuSign Envelope ID: 09934EE9-0C55-40A3-8631-9C0AF6797111

G:\PROJECTS\103 - West Yost Associates\1032109 - Sweet Home Wwtp Phase 1 Design\Design\(2) Drawings\Current\sweet Home Wwtp Phase 1 Design\Sheets\E-031 Panel Schedules 1.dwg E-031 Panel Schedules 1 7/28/2022 5:52 PM
JLUTE 24.1s (LMS Tech)

PANEL NAME: DP-200
VOLT/PHASE: 480V, 3Ø
NUM. POLES: 42
AIC RATING: 65,000
NOTES: NEW PANEL
REF. KEY NOTE #:

LOCATION: MAIN ELECTRICAL ROOM
FED FROM: MTS-200
BREAKER MOUNTING: BOLTED
MAIN BREAKER AMPS: 200
BUS RATING AMPS: 225
SPD: YES

NOTES	LOAD DESCRIPTION	LOAD TYPE	VA L1	VA L2	VA L3	TRIP RATING AMPS	CIRCUIT NUMBER	CIRCUIT NUMBER	TRIP RATING AMPS	VA L1	VA L2	VA L3	LOAD TYPE	LOAD DESCRIPTION	NOTES
	TRANSFORMER LP-200	T	5,327			50	1	2	30	3,333			H	GEN-1 BLOCK HEATER	
		T		3,837			3	4			3,333		H		
		T			3,635		5	6				3,333	H		
	MOTORIZED ENTRY GATE	M1	1,242			20	7	8	25	3,040			H	AIR HANDLING UNIT AHU-1 RM. 420	
		M1		1,242			9	10			3,040		H		
		M1			1,242		11	12				3,040	H		
	EXISTING BATHROOM TRANSFORMER T-210	T	3,000			40	13	14	20	2,240			H	MEB BUILDING CONDENSING UNIT CU-1	
		T		3,000			15	16			2,240		H		
	SPARE				-	20	17	18				2,240	H		
	SPARE		-			20	19	20	20	-				SPARE	
	SPARE			-		20	21	22	20		-			SPARE	
	SPARE				-	20	23	24	20			-		SPARE	
	SPARE		-			20	25	26	20	-				SPARE	
	SPARE			-		20	27	28	20		-			SPARE	
	SPARE				-	20	29	30	20			-		SPARE	
	SPARE		-			20	31	32	20	-				SPARE	
	SPARE			-		20	33	34	20		-			SPARE	
	SPARE				-	20	35	36	20			-		SPARE	
	SPARE		-			20	37	38	30	10			R	SURGE PROTECTION DEVICE	
	SPARE			-		20	39	40			10		R		
	SPARE				-	20	41	42				10	R		

TOTAL LOAD:	9,569	8,079	4,877	TOTAL LOAD:	8,623	8,623	8,623	
COMBINED LOAD:	18,192	16,702	13,500	CONNECTED LOAD:	48,394	DEMAND LOAD:	49,326	
						DEMAND AMPS:	59	

Load Type Key		Demand Factor	Connected Load	Demand Load		
R	General Purpose Receptacle	100% First 10kVA, 50% thereafter	30	30		
L	Lighting	125% Load	0	0		
M1	Largest Motor	125% Load	3,726	4,658		
M	Motor	100% Load	0	0		
A	Appliance	100% Load	0	0		
H	HVAC	100% Load	25,839	25,839		
K	Kitchen	65% Load	0	0	6	- Units of Equipment - See NEC Table 220.56
E	Equipment	100% Load	0	0		
T	Transformer	100% Load	18,799	18,799		
W	Welder	100% Load	0	0		
RV	Recreational Vehicle	XX% Load	0	0	XX	- RV Sites - See NEC Table 551.71 (A)

NOTES:

PANEL NAME: LP-200
VOLT/PHASE: 208/120V, 3Ø
NUM. POLES: 42
AIC RATING: 42,000
NOTES: NEW PANEL
REF. KEY NOTE #:

LOCATION: MAIN ELECTRICAL ROOM
FED FROM: T-200
BREAKER MOUNTING: BOLTED
MAIN BREAKER AMPS: 125
BUS RATING AMPS: 225
SPD: NO

NOTES	LOAD DESCRIPTION	LOAD TYPE	VA L1	VA L2	VA L3	TRIP RATING AMPS	CIRCUIT NUMBER	CIRCUIT NUMBER	TRIP RATING AMPS	VA L1	VA L2	VA L3	LOAD TYPE	LOAD DESCRIPTION	NOTES
	MEB BUILDING EXTERIOR LIGHTS	L	80			20	1	2	30	2,200			E	CONTROL PANEL 200 CP-200	
	LIGHTS RM. 420	L		558		20	3	4	20		300		E	GEN-1 BATTERY CHARGER	
	LIGHTS RM. 421	L			1,083	20	5	6	20			500	E	GEN-1 COOLANT HEATER	
	RECEPTACLES RM. 420	R	720			20	7	8	20	500			E		
	RECEPTACLES RM. 421, EXTERIOR	R		1,080		20	9	10	20		652		M	EXHAUST FAN EF-1 RM. 421	
	EXISTING UTILITY POLE LIGHTS	L			500	20	11	12				652	M		
	UNIT HEATER UH-1	H	1,175			20	13	14		652			M		
		H		1,175			15	16			72		L	ENTRY GATE LIGHT	
	ROOM 420 OVERHEAD DOOR	E			900	20	17	18	20			-		SPARE	
	SPARE		-			20	19	20	20	-				SPARE	
	SPARE			-		20	21	22	20		-			SPARE	
	SPARE				-	20	23	24	20			-		SPARE	
	SPARE		-			20	25	26	20	-				SPARE	
	SPARE			-		20	27	28	20		-			SPARE	
	SPARE				-	20	29	30	20			-		SPARE	
	SPARE		-			20	31	32	20	-				SPARE	
	SPARE			-		20	33	34	20		-			SPARE	
	SPARE				-	20	35	36	20			-		SPARE	
	SPARE		-			20	37	38	20	-				SPARE	
	SPARE			-		20	39	40	20		-			SPARE	
	SPARE				-	20	41	42	20			-		SPARE	

TOTAL LOAD:	1,975	2,813	2,483	TOTAL LOAD:	3,352	1,024	1,152	
COMBINED LOAD:	5,327	3,837	3,635	CONNECTED LOAD:	12,799	DEMAND LOAD:	12,785	
						DEMAND AMPS:	35	

Load Type Key		Demand Factor	Connected Load	Demand Load		
R	General Purpose Receptacle	100% First 10kVA, 50% thereafter	1,800	1,800		
L	Lighting	125% Load	2,293	2,866		
M1	Largest Motor	125% Load	0	0		
M	Motor	100% Load	1,956	1,956		
A	Appliance	50% Load	0	0		
H	HVAC	75% Load	2,350	1,763		
K	Kitchen	XX% Load	0	0	XX	- Units of Equipment - See NEC Table 220.56
E	Equipment	100% Load	4,400	4,400		
T	Transformer	100% Load	0	0		
W	Welder	100% Load	0	0		
RV	Recreational Vehicle	XX% Load	0	0	XX	- RV Sites - See NEC Table 551.71 (A)

NOTES:

NO.	DATE	BY	REVISION

NOTICE
0 ½ 1
IF THIS BAR DOES NOT MEASURE 1" THEN DRAWING IS NOT TO SCALE

MB DESIGNED
JL DRAWN
BP CHECKED

REGISTERED PROFESSIONAL ENGINEER 86683 OREGON MAY 08, 2012 BENJAMIN E. PERRY
Digitally Signed
EXPIRES: 12-31-2022

WEST YOST
Water. Engineered.

Landis Consulting
ENGINEERING SERVICES
6446 Fairway Ave. SE, Suite 220
Salem, OR 97306
503-584-1576
www.landisconsulting.com

Sweet Home Oregon at its best!

MAHLER WATER RECLAMATION FACILITY IMPROVEMENTS PROJECT PHASE 1

PANEL SCHEDULES 1

PROJECT NO.: 936-50-21-09 | SCALE: AS NOTED | DATE: AUGUST 2022

SHEET
E-031

DocuSign Envelope ID: 09934EE9-0C55-40A3-8631-9C0AF6797111

G:\PROJECTS\103 - West Yost Associates\10321109 - Sweet Home Wwtp Phase 1 Design\Design\(2) Drawings\Current\sweet Home Wwtp Phase 1 Design\Sheets\E-032 Panel Schedules 2.dwg E-032 Panel Schedules 2 7/28/2022 5:51 PM
JLUTE 24.1s (LMS Tech)

PANEL NAME: PNL-SPD
VOLT/PHASE: 480/277V, 3Ø
NUM. POLES: 36
AIC RATING: 42,000
NOTES: EXISTING PANEL
REF. KEY NOTE #:

LOCATION: EXISTING ELECTRICAL BUILDING
FED FROM: AUTOMATIC TRANSFER SWITCH
BREAKER MOUNTING: BOLTED
MAIN BREAKER AMPS: 400
BUS RATING AMPS: 400
SPD: NO

NOTES	LOAD DESCRIPTION	LOAD TYPE	VA L1	VA L2	VA L3	TRIP RATING AMPS	CIRCUIT NUMBER	CIRCUIT NUMBER	TRIP RATING AMPS	VA L1	VA L2	VA L3	LOAD TYPE	LOAD DESCRIPTION	NOTES
1	LTG. TRANS.	T	5,000			50	1	2	30	4,000			E	COMM #1	1
		T		5,000			3	4			4,000		E		
		T			5,000		5	6				4,000	E		
3	UNIT HEATER 1		-			20	7	8	20	1,333			E	COMM #2	1
				-			9	10			1,333		E		
					-		11	12				1,333	E		
1	VALVE 1	E	100			20	13	14	20	500			E	MOTORIZED GATE	1
		E		100			15	16			500		E		
		E			100		17	18				500	E		
1	VALVE 2	E	100			20	19	20	15	10			E	POWER FAIL RELAY	1
		E		100			21	22			10		E		
		E			100		23	24				10	E		
1	VFD2	M1	9,333			40	25	26	20	300			E	INFLUENT ACTUATED GATE SLG-110-00	2
		M1		9,333			27	28			300		E		
		M1			9,333		29	30				300	E		
2	UNIT HEATER	H	1,666			20	31	32	15	1,280			M	CONDENSING UNIT CU-1	2
		H		1,666			33	34			1,280		M		
		H			1,666		35	36				1,280	M		

TOTAL LOAD:	16,199	16,199	16,199	TOTAL LOAD:	7,423	7,423	7,423	
COMBINED LOAD:	23,622	23,622	23,622	CONNECTED LOAD:	70,866	DEMAND LOAD:	76,616	
						DEMAND AMPS:	92	

Load Type Key		Demand Factor	Connected Load	Demand Load
R	General Purpose Receptacle	100% First 10kVA, 50% thereafter	0	0
L	Lighting	125% Load	0	0
M1	Largest Motor	125% Load	27,999	34,999
M	Motor	100% Load	3,840	3,840
A	Appliance	50% Load	0	0
H	HVAC	75% Load	4,998	3,749
K	Kitchen	XX% Load	0	0
E	Equipment	100% Load	19,029	19,029
T	Transformer	100% Load	15,000	15,000
W	Welder	100% Load	0	0
RV	Recreational Vehicle	XX% Load	0	0

XX - Units of Equipment - See NEC Table 220.56

XX - RV Sites - See NEC Table 551.71 (A)

NOTES:
[1] EXISTING BRANCH CIRCUIT. LOAD VA VALUES BASED ON AS-BUILT DOCUMENTS.
[2] NEW LOAD ON EXISTING PANEL. PROVIDE NEW BREAKER.
[3] DEMOLISH EXISTING BREAKER AND WIRING.

PANEL NAME: PNL-L
VOLT/PHASE: 208/120V, 3Ø
NUM. POLES: 42
AIC RATING: 42,000
NOTES: EXISTING PANEL
REF. KEY NOTE #:

LOCATION: EXISTING ELECTRICAL BUILDING
FED FROM: 15KVA TRANSFORMER
BREAKER MOUNTING: BOLTED
MAIN BREAKER AMPS: 60
BUS RATING AMPS: 100
SPD: NO

NOTES	LOAD DESCRIPTION	LOAD TYPE	VA L1	VA L2	VA L3	TRIP RATING AMPS	CIRCUIT NUMBER	CIRCUIT NUMBER	TRIP RATING AMPS	VA L1	VA L2	VA L3	LOAD TYPE	LOAD DESCRIPTION	NOTES
1	MAIN BREAKER	R	-			50	1	2	20	720			R	RECEPTACLE GENERATOR BUILDING	2
		R		-			3	4	20		-		R	GENERATOR LOUVERS	3
		R			-		5	6	20			-	R	GENERATORY BATTERY CHARGER	3
1	GENERATOR BUILDING INTERIOR LIGHTING	L	536			20	7	8	20	600			L	INTAKE STATION LIGHTING	1
1	GENERATOR BUILDING EXTERIOR LIGHT	L		100		20	9	10	20		720		R	INTAKE STATION RECEPTACLE	1
1	ICP PANEL CONTROL POWER	R			1,000	20	11	12	20			200	H	GENERATOR ROOM EXHAUST FAN	1
1	EMERGENCY AIR COMPRESSOR	R	1,000			20	13	14	20	2,200			E	CONTROL PANEL CP-300	2
	SPARE			-		20	15	16	20		500		E	NETWORK INTERFACE PANEL NIP-300	2
2	IPS PDP-110-01 RECEPTACLE & HEATER	E			380	20	17	18	20			500	E	MAIN IT/OT SERVER RACK MNP-100	2
2	IPS PDP-110-02 HEATER	E	200			20	19	20	20	-				SPARE	
2	IPS PDP-110-03 RECEPTACLE & HEATER	E		100		20	21	22	20		-			SPARE	
	SPARE				-	20	23	24	20			500	H	INTAKE STATION SUMP PUMP 240V	1
1	WELDING OUTLET	R	1,000			50	25	26		500			H		
		R		1,000			27	28	20		-			SPARE	1
2	FC-1	M			2,149	35	29	30				-			
		M	2,149				31	32		-					
		M		2,149			33	34	20		-			SPARE	
	SPARE				-	20	35	36	20			-		SPARE	
	SPARE		-			20	37	38	20	-				SPARE	
	SPARE			-		20	39	40	20		-			SPARE	
	SPARE				-	20	41	42	20			-		SPARE	

TOTAL LOAD:	4,885	3,349	3,529	TOTAL LOAD:	4,020	1,220	1,200	
COMBINED LOAD:	8,905	4,569	4,729	CONNECTED LOAD:	18,203	DEMAND LOAD:	18,212	
						DEMAND AMPS:	51	

Load Type Key		Demand Factor	Connected Load	Demand Load
R	General Purpose Receptacle	100% First 10kVA, 50% thereafter	5,440	5,440
L	Lighting	125% Load	1,236	1,545
M1	Largest Motor	125% Load	0	0
M	Motor	100% Load	6,447	6,447
A	Appliance	50% Load	0	0
H	HVAC	75% Load	1,200	900
K	Kitchen	XX% Load	0	0
E	Equipment	100% Load	3,880	3,880
T	Transformer	100% Load	0	0
W	Welder	100% Load	0	0
RV	Recreational Vehicle	XX% Load	0	0

XX - Units of Equipment - See NEC Table 220.56

XX - RV Sites - See NEC Table 551.71 (A)

NOTES:
[1] EXISTING BRANCH CIRCUIT. LOAD VA VALUES BASED ON AS-BUILT DOCUMENTS.
[2] NEW LOAD ON EXISTING PANEL. UTILIZE EXISTING BREAKER.
[3] DEMOLISH EXISTING BREAKER AND WIRING.

NO.	DATE	BY	REVISION

NOTICE
0 ½ 1
IF THIS BAR DOES NOT MEASURE 1" THEN DRAWING IS NOT TO SCALE

MB DESIGNED
JL DRAWN
BP CHECKED

REGISTERED PROFESSIONAL ENGINEER 86683 OREGON MAY 08, 2012 BENJAMIN E. PERRY
Digitally Signed
EXPIRES: 12-31-2022

WEST YOST
Water. Engineered.

Landis Consulting
ENGINEERING SERVICES
6446 Fairway Ave. SE, Suite 220
Salem, OR 97306
503-584-1576
www.landisconsulting.com

Sweet Home Oregon at its best!

MAHLER WATER RECLAMATION FACILITY IMPROVEMENTS PROJECT PHASE 1

PANEL SCHEDULES 2

PROJECT NO.: 936-50-21-09 | SCALE: AS NOTED | DATE: AUGUST 2022

SHEET
E-032

DocuSign Envelope ID: 09934EE9-0C55-40A3-8631-9C0AF6797111

G:\PROJECTS\103 - West Yost Associates\1032109 - Sweet Home Wwtp Phase 1 Design\Design\(2) Drawings\Current\sweet Home Wwtp Phase 1 Design\Sheets\E-050 Service Entrance - Raceway Block Diagram.dwg E-050 Service Entrance - Raceway Block Diagram 7/28/2022 6:34 PM JLUTE 24.1s (LMS Tech)

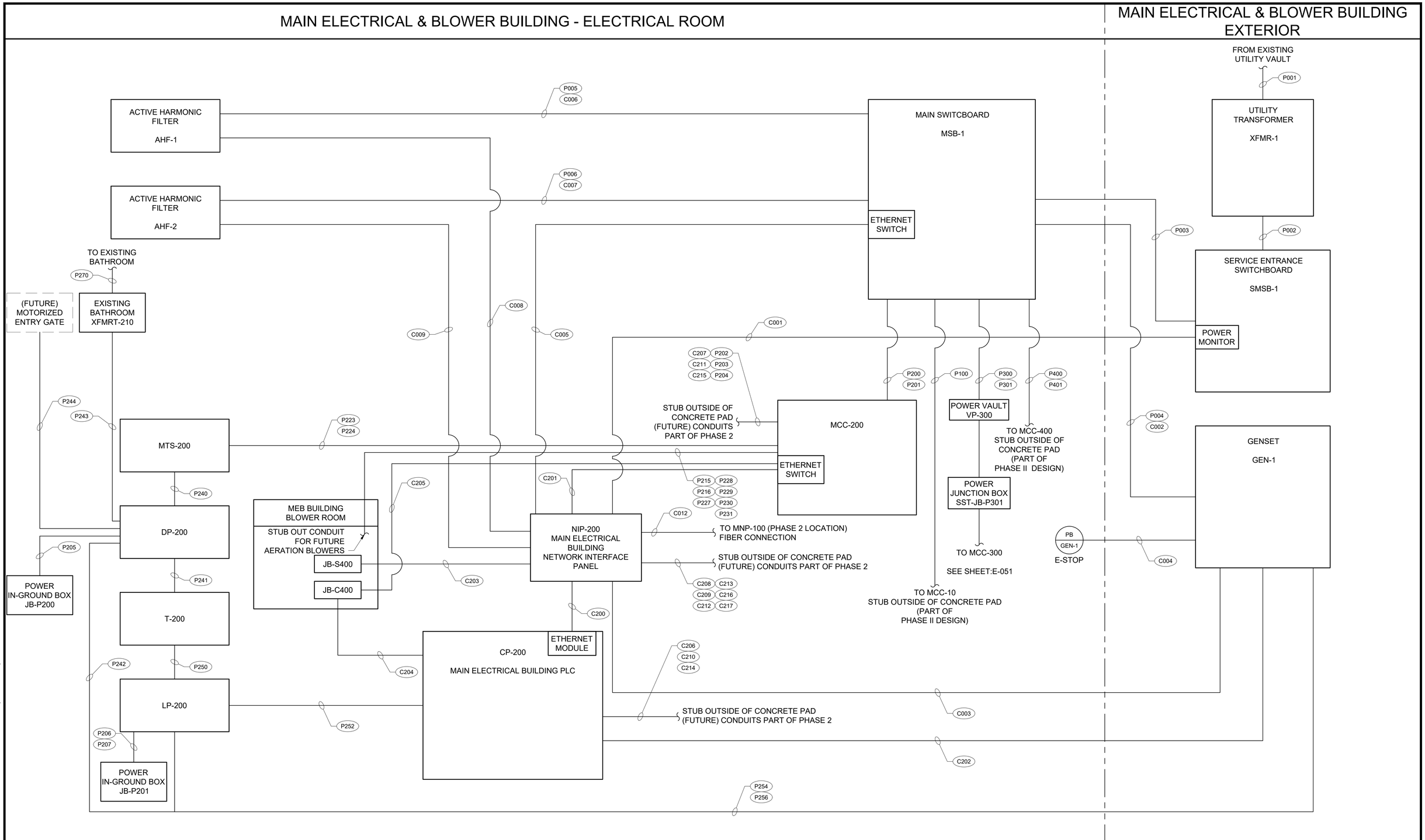

NO.	DATE	BY	REVISION

NOTICE
0 ½ 1
IF THIS BAR DOES NOT MEASURE 1" THEN DRAWING IS NOT TO SCALE

MB DESIGNED
JL DRAWN
BP CHECKED

REGISTERED PROFESSIONAL ENGINEER 86683 OREGON MAY 08, 2012 BENJAMIN E. PERRY
Digitally Signed
EXPIRES: 12-31-2022

WEST YOST
Water. Engineered.

Landis Consulting
ENGINEERING SERVICES
6446 Fairway Ave. SE, Suite 220
Salem, OR 97306
503-584-1576
www.landisconsulting.com

Sweet Home Oregon at its best!

MAHLER WATER RECLAMATION FACILITY IMPROVEMENTS PROJECT PHASE 1

SERVICE ENTRANCE RACEWAY BLOCK DIAGRAM

PROJECT NO.: 936-50-21-09 | SCALE: AS NOTED | DATE: AUGUST 2022

SHEET
E-050
88 of 135

DocuSign Envelope ID: 09934EE9-0C55-40A3-8631-9C0AF6797111

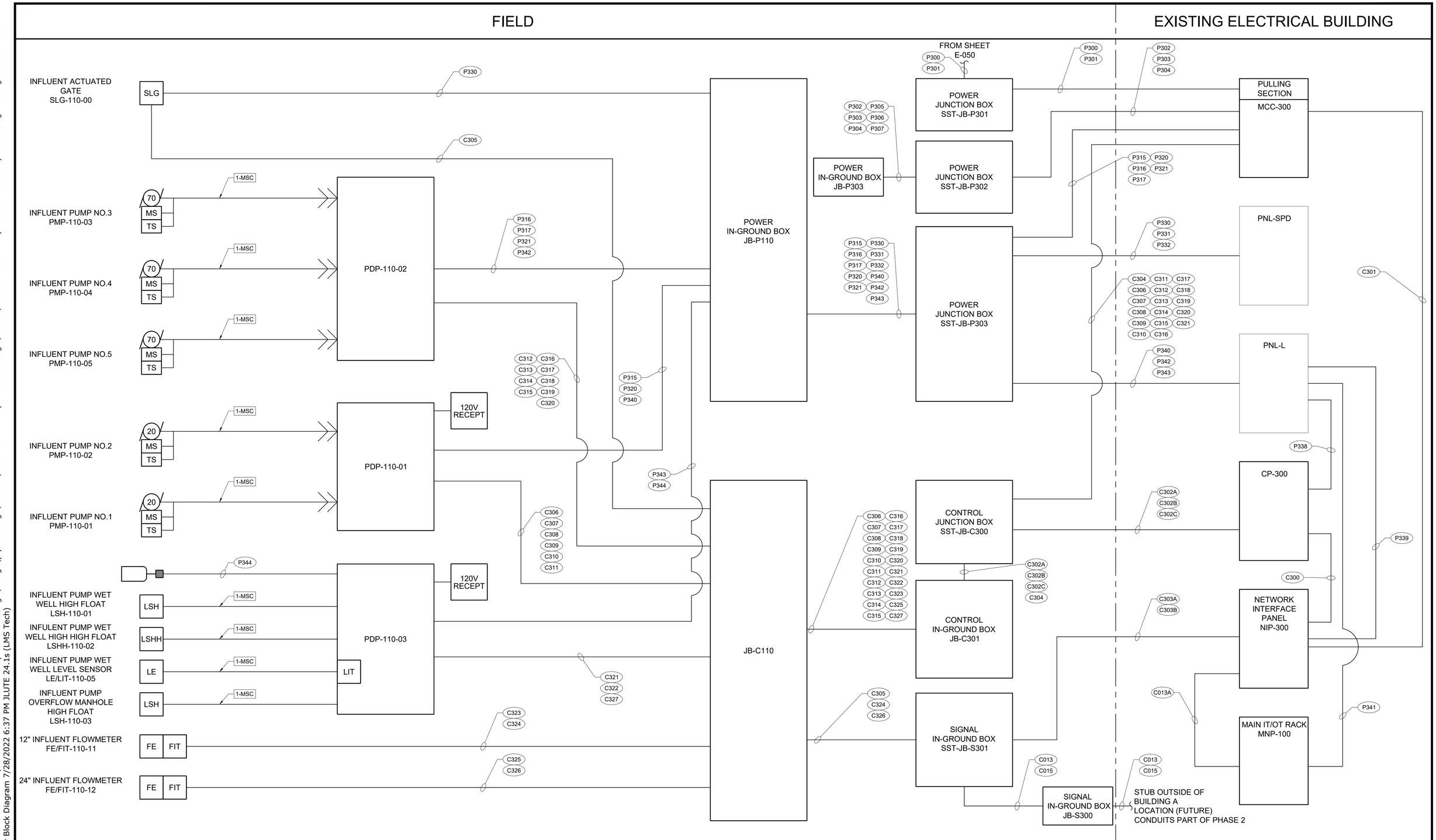

NO.	DATE	BY	REVISION

NOTICE
0 ½ 1
IF THIS BAR DOES NOT MEASURE 1" THEN DRAWING IS NOT TO SCALE

MB DESIGNED
JL DRAWN
BP CHECKED

REGISTERED PROFESSIONAL ENGINEER 86683 OREGON MAY 08, 2012 BENJAMIN E. PERRY
Digitally Signed
EXPIRES: 12-31-2022

WEST YOST
Water. Engineered.

Landis Consulting
ENGINEERING SERVICES
6446 Fairway Ave. SE, Suite 220
Salem, OR 97306
503-584-1576
www.landisconsulting.com

Sweet Home Oregon at its best!

MAHLER WATER RECLAMATION FACILITY IMPROVEMENTS PROJECT PHASE 1

INFLUENT PUMP STATION RACEWAY BLOCK DIAGRAM

PROJECT NO.: 936-50-21-09 | SCALE: AS NOTED | DATE: AUGUST 2022

SHEET
E-051
89 of 135

G:\PROJECTS\103 - West Yost Associates\1032109 - Sweet Home Wwtp Phase 1 Design\Design\(2) Drawings\Current\sweet Home Wwtp Phase 1 Design\Sheets\E-051 Influent Pump Station - Raceway Block Diagram.dwg E-051 Influent Pump Station - Raceway Block Diagram 7/28/2022 6:37 PM JLUTE 24.1s (LMS Tech)

DocuSign Envelope ID: 09934EE9-0C55-40A3-8631-9C0AF6797111

G:\PROJECTS\103 - West Yost Associates\1032109 - Sweet Home Wwtp Phase 1 Design\Design\(2) Drawings\Current\sweet Home Wwtp Phase 1 Design\Sheets\1032109-E-101 Electrical Site Demolition Plan.dwg 1032109-E-101 Electrical Site Demolition Plan 7/28/2022 6:05 PM JLUTE 24.1s (LMS Tech)

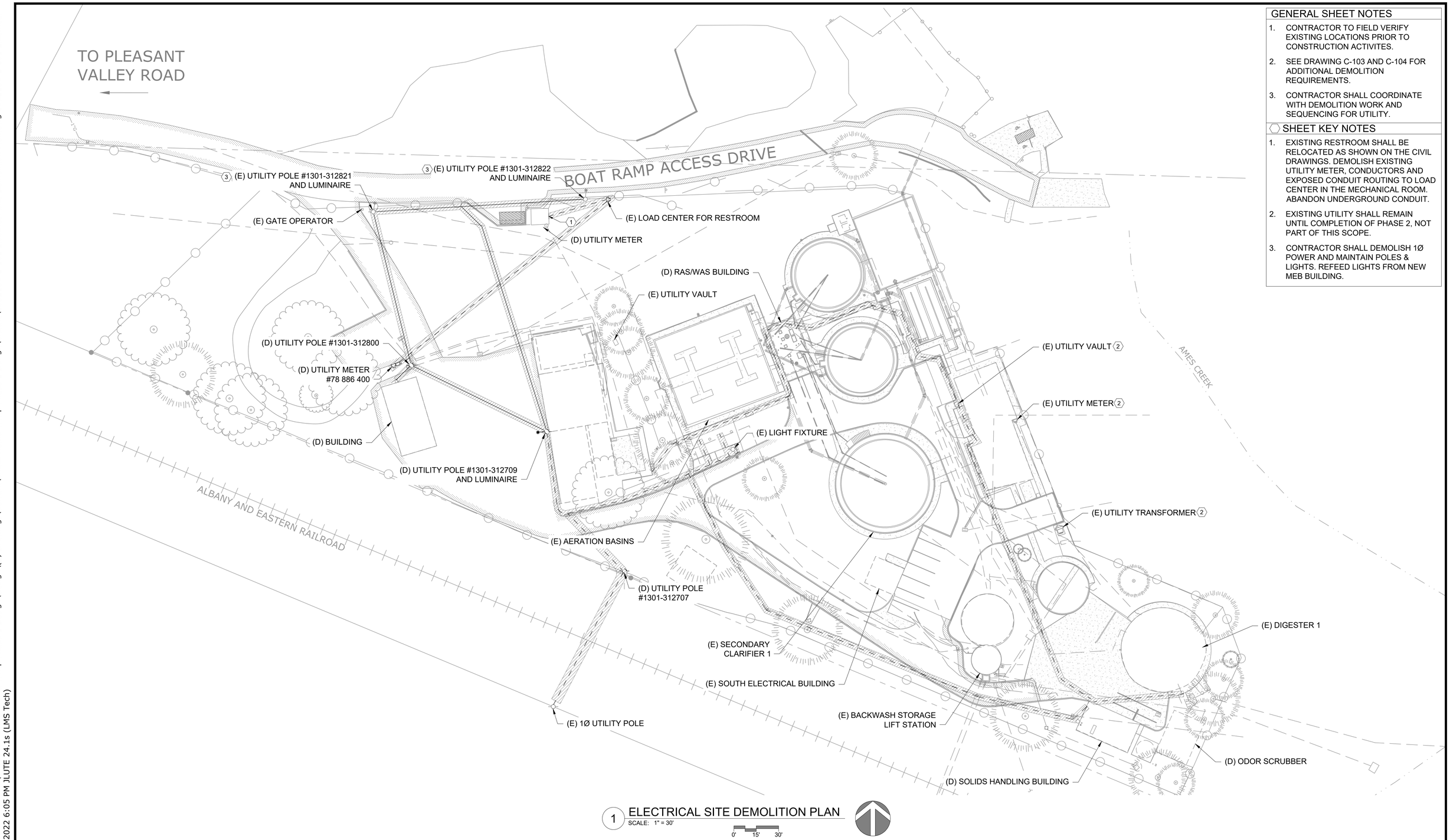

1 ELECTRICAL SITE DEMOLITION PLAN
SCALE: 1" = 30'
0' 15' 30'

GENERAL SHEET NOTES

1. CONTRACTOR TO FIELD VERIFY EXISTING LOCATIONS PRIOR TO CONSTRUCTION ACTIVITES.
2. SEE DRAWING C-103 AND C-104 FOR ADDITIONAL DEMOLITION REQUIREMENTS.
3. CONTRACTOR SHALL COORDINATE WITH DEMOLITION WORK AND SEQUENCING FOR UTILITY.

SHEET KEY NOTES

1. EXISTING RESTROOM SHALL BE RELOCATED AS SHOWN ON THE CIVIL DRAWINGS. DEMOLISH EXISTING UTILITY METER, CONDUCTORS AND EXPOSED CONDUIT ROUTING TO LOAD CENTER IN THE MECHANICAL ROOM. ABANDON UNDERGROUND CONDUIT.
2. EXISTING UTILITY SHALL REMAIN UNTIL COMPLETION OF PHASE 2, NOT PART OF THIS SCOPE.
3. CONTRACTOR SHALL DEMOLISH 1Ø POWER AND MAINTAIN POLES & LIGHTS. REFEED LIGHTS FROM NEW MEB BUILDING.

NO.	DATE	BY	REVISION

NOTICE
0 ½ 1
IF THIS BAR DOES NOT MEASURE 1" THEN DRAWING IS NOT TO SCALE

MB DESIGNED
JL DRAWN
BP CHECKED

REGISTERED PROFESSIONAL ENGINEER 86683 Digitally Signed OREGON MAY 08, 2012 BENJAMIN E. PERRY
EXPIRES: 12-31-2022

WEST YOST Water. Engineered.

Landis Consulting
ENGINEERING SERVICES
6446 Fairway Ave. SE, Suite 220
Salem, OR 97306
503-584-1576
www.landisconsulting.com

Sweet Home Oregon at its best!

MAHLER WATER RECLAMATION FACILITY IMPROVEMENTS PROJECT PHASE 1

ELECTRICAL SITE DEMOLITION PLAN

PROJECT NO.: 936-50-21-09 | SCALE: AS NOTED | DATE: AUGUST 2022

SHEET
E-101

DocuSign Envelope ID: 09934EE9-0C55-40A3-8631-9C0AF6797111

G:\PROJECTS\103 - West Yost Associates\1032109 - Sweet Home Wwtp Phase 1 Design\Design\(2) Drawings\Current\sweet Home Wwtp Phase 1 Design\Sheets\1032109-E-102 Electrical Overall Site Plan.dwg 1032109-E-102 Electrical Overall Site Plan 7/28/2022 6:05 PM JLUTE 24.1s (LMS Tech)

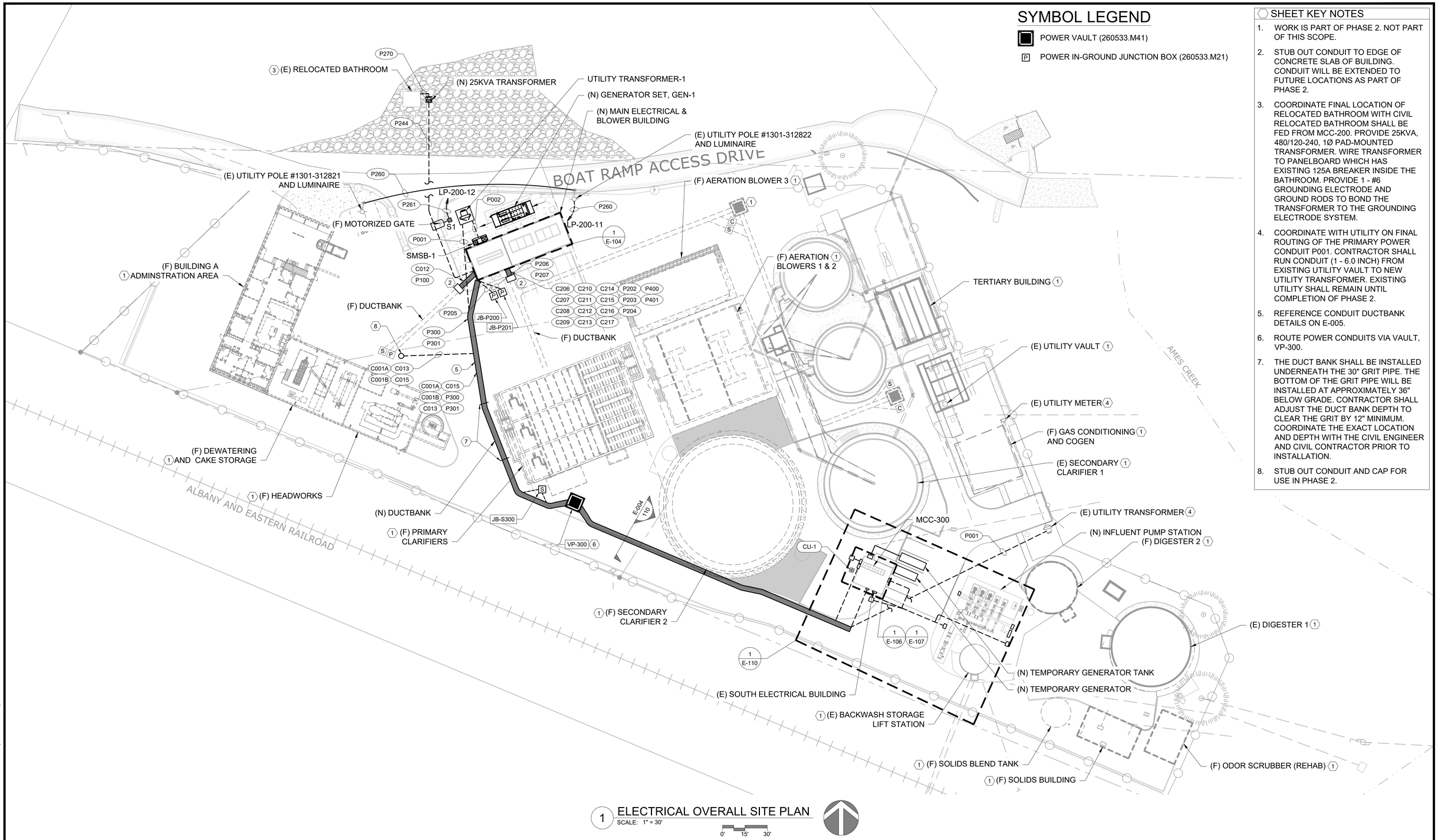

1 ELECTRICAL OVERALL SITE PLAN
SCALE: 1" = 30'
0' 15' 30'

SYMBOL LEGEND

- POWER VAULT (260533.M41)
- P POWER IN-GROUND JUNCTION BOX (260533.M21)

SHEET KEY NOTES

1. WORK IS PART OF PHASE 2. NOT PART OF THIS SCOPE.
2. STUB OUT CONDUIT TO EDGE OF CONCRETE SLAB OF BUILDING. CONDUIT WILL BE EXTENDED TO FUTURE LOCATIONS AS PART OF PHASE 2.
3. COORDINATE FINAL LOCATION OF RELOCATED BATHROOM WITH CIVIL RELOCATED BATHROOM SHALL BE FED FROM MCC-200. PROVIDE 25KVA, 480/120-240, 1Ø PAD-MOUNTED TRANSFORMER. WIRE TRANSFORMER TO PANELBOARD WHICH HAS EXISTING 125A BREAKER INSIDE THE BATHROOM. PROVIDE 1 - #6 GROUNDING ELECTRODE AND GROUND RODS TO BOND THE TRANSFORMER TO THE GROUNDING ELECTRODE SYSTEM.
4. COORDINATE WITH UTILITY ON FINAL ROUTING OF THE PRIMARY POWER CONDUIT P001. CONTRACTOR SHALL RUN CONDUIT (1 - 6.0 INCH) FROM EXISTING UTILITY VAULT TO NEW UTILITY TRANSFORMER. EXISTING UTILITY SHALL REMAIN UNTIL COMPLETION OF PHASE 2.
5. REFERENCE CONDUIT DUCTBANK DETAILS ON E-005.
6. ROUTE POWER CONDUITS VIA VAULT, VP-300.
7. THE DUCT BANK SHALL BE INSTALLED UNDERNEATH THE 30" GRIT PIPE. THE BOTTOM OF THE GRIT PIPE WILL BE INSTALLED AT APPROXIMATELY 36" BELOW GRADE. CONTRACTOR SHALL ADJUST THE DUCT BANK DEPTH TO CLEAR THE GRIT BY 12" MINIMUM. COORDINATE THE EXACT LOCATION AND DEPTH WITH THE CIVIL ENGINEER AND CIVIL CONTRACTOR PRIOR TO INSTALLATION.
8. STUB OUT CONDUIT AND CAP FOR USE IN PHASE 2.

NO.	DATE	BY	REVISION

NOTICE
0 ½ 1
IF THIS BAR DOES NOT MEASURE 1" THEN DRAWING IS NOT TO SCALE

MB DESIGNED
JL DRAWN
BP CHECKED

REGISTERED PROFESSIONAL ENGINEER 86683 OREGON BENJAMIN E. PERRY
Digitally Signed
MAY 08, 2012
EXPIRES: 12-31-2022

WEST YOST
Water. Engineered.

Landis Consulting
ENGINEERING SERVICES
6446 Fairway Ave. SE, Suite 220
Salem, OR 97306
503-584-1576
www.landisconsulting.com

Sweet Home Oregon at its best!

MAHLER WATER RECLAMATION FACILITY IMPROVEMENTS PROJECT PHASE 1

ELECTRICAL OVERALL SITE PLAN

PROJECT NO.: 936-50-21-09 | SCALE: AS NOTED | DATE: AUGUST 2022

SHEET
E-102
91 of 135

DocuSign Envelope ID: 09934EE9-0C55-40A3-8631-9C0AF6797111

G:\PROJECTS\103 - West Yost Associates\1032109 - Sweet Home Wwtp Phase 1 Design\Design\(2) Drawings\Current\sweet Home Wwtp Phase 1 Design\Sheets\1032109-E-103 Electrical Hazardous Location Plan.dwg 1032109-E-103
Electrical Hazardous Location Plan 7/28/2022 6:04 PM JLUTE 24.1s (LMS Tech)

GENERAL SHEET NOTES

1. REFER TO SPECIFICATIONS FOR ENCLOSURE REQUIREMENTS.

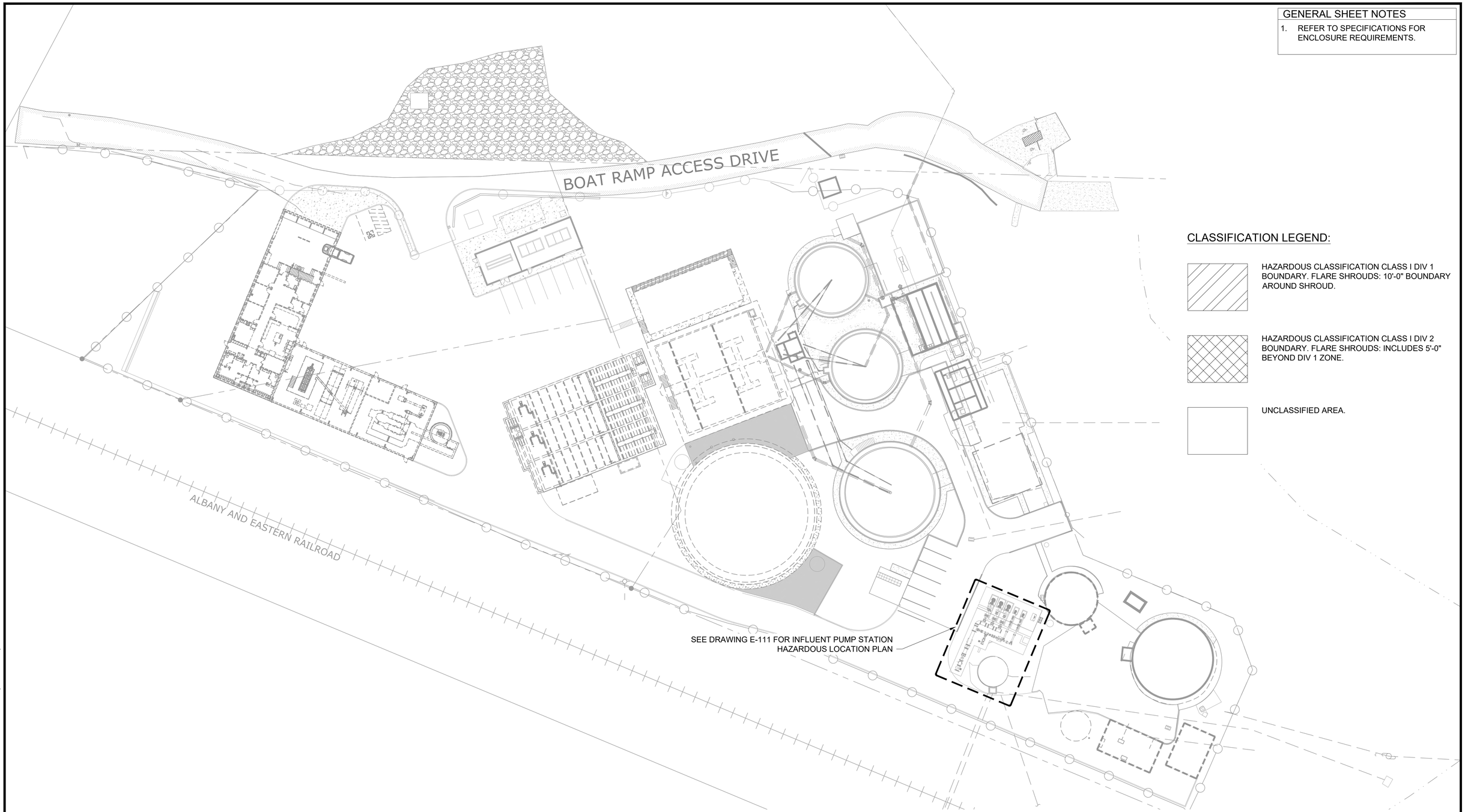

CLASSIFICATION LEGEND:

- HAZARDOUS CLASSIFICATION CLASS I DIV 1 BOUNDARY. FLARE SHROUDS: 10'-0" BOUNDARY AROUND SHROUD.
- HAZARDOUS CLASSIFICATION CLASS I DIV 2 BOUNDARY. FLARE SHROUDS: INCLUDES 5'-0" BEYOND DIV 1 ZONE.
- UNCLASSIFIED AREA.

1 ELECTRICAL HAZARDOUS LOCATION PLAN
SCALE: 1" = 30'
0' 15' 30'

NO.	DATE	BY	REVISION

NOTICE
0 ½ 1
IF THIS BAR DOES NOT MEASURE 1" THEN DRAWING IS NOT TO SCALE

MB DESIGNED
JL DRAWN
BP CHECKED

REGISTERED PROFESSIONAL ENGINEER 86683 Digitally Signed OREGON MAY 08, 2012 BENJAMIN E. PERRY
EXPIRES: 12-31-2022

WEST YOST
Water. Engineered.

Landis Consulting
ENGINEERING SERVICES
6446 Fairway Ave. SE, Suite 220
Salem, OR 97306
503-584-1576
www.landisconsulting.com

Sweet Home Oregon at its best!

MAHLER WATER RECLAMATION FACILITY IMPROVEMENTS PROJECT PHASE 1

ELECTRICAL HAZARDOUS LOCATION PLAN

PROJECT NO.: 936-50-21-09 | SCALE: AS NOTED | DATE: AUGUST 2022

SHEET
E-103

DocuSign Envelope ID: 09934EE9-0C55-40A3-8631-9C0AF6797111

G:\PROJECTS\103 - West Yost Associates\1032109 - Sweet Home Wwtp Phase 1 Design\Design\(2) Drawings\Current\sweet Home Wwtp Phase 1 Design\Sheets\E-104 Main Electrical & Blower Building Floor Plan.dwg E-104 Main Electrical & Blower Building Floor Plan 7/28/2022 6:41 PM JLUTE 24.1s (LMS Tech)

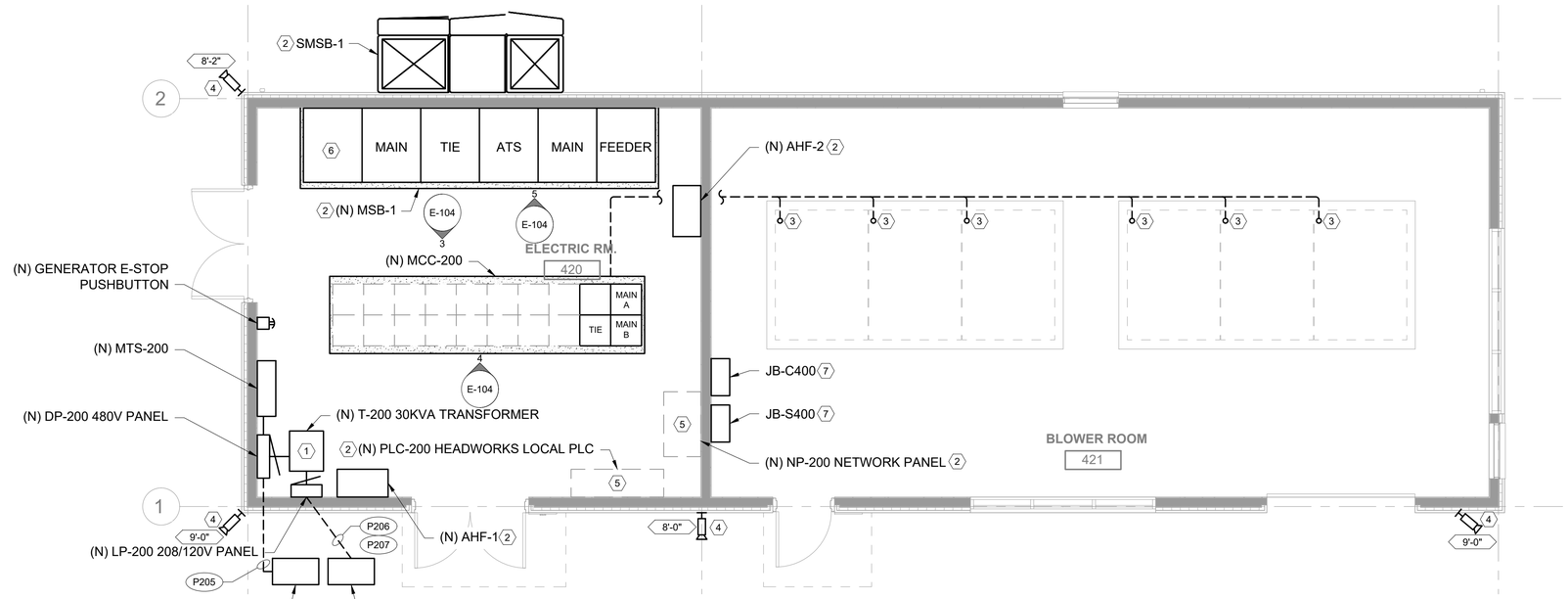

1 MAIN ELECTRICAL & BLOWER BUILDING EQUIPMENT FLOOR PLAN

SCALE: 1/4" = 1'-0"

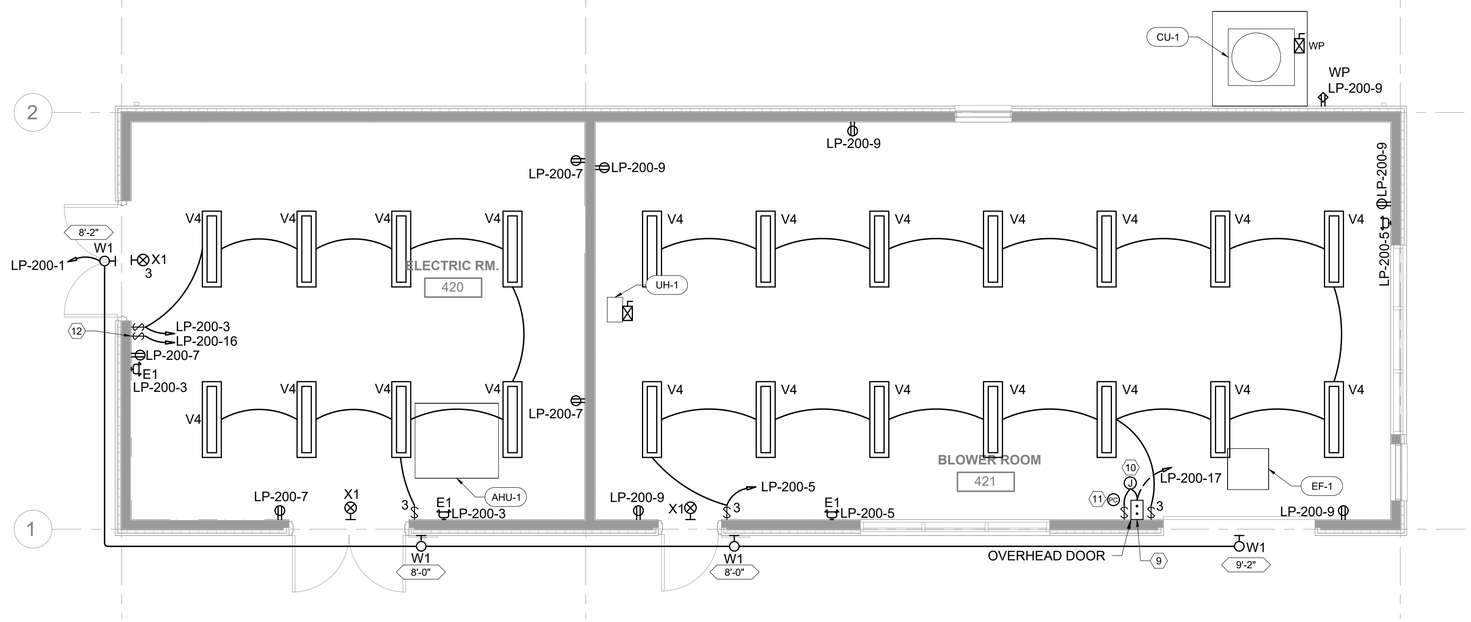

2 MAIN ELECTRICAL & BLOWER BUILDING LIGHTING & RECEPTACLE PLAN

SCALE: 1/4" = 1'-0"

GENERAL SHEET NOTES

1. REFERENCE MECHANICAL CONNECTION SCHEDULE E-027 FOR HVAC LOADS AND CIRCUITING.
2. ALL EXIT SIGNS AND EMERGENCY LIGHT SHALL BE WIRED TO LOCAL LIGHTING BRANCH CIRCUIT, AHEAD OF ALL SWITCHING.

SHEET KEY NOTES

1. CONTRACTOR SHALL MOUNT TRANSFORMER T-200 ABOVE LP-200.
2. OWNER FURNISHED, CONTRACTOR INSTALLED EQUIPMENT.
3. COORDINATE FINAL LOCATION WITH OWNER. STUB UP CONDUIT AND CAP. LFAC CONDUIT SHALL EXTEND TO BLOWER AS PART OF PHASE 2.
4. PROVIDE 0.75" CONDUIT FOR FUTURE CAMERAS AND ROUTE UNDERGROUND TO FUTURE LOCATION OF NIP-200. REFERENCE SECTION 260533 FOR REQUIREMENTS ON SPARE CONDUIT.
5. EQUIPMENT IS PART OF PHASE 2, NOT PART OF THIS SCOPE.
6. MAIN GROUNDING BUS BAR.
7. PROVIDE 24"W X 12"D JUNCTION BOX.
8. PROVIDE 17"W X 30"L IN-GROUND JUNCTION BOX.
9. OVERHEAD DOOR PUSHBUTTONS STATION. PROVIDE 0.75" CONDUIT FROM DOOR CONTROLLER TO PUSHBUTTON STATION. INSTALL PER MANUFACTURER'S INSTRUCTIONS.
10. OVERHEAD DOOR CONTROLLER (2 - #12, 1 - #12G IN 0.75" CONDUIT). COORDINATE LOCATION WITH ARCHITECT PRIOR TO INSTALLATION.
11. OVERHEAD DOOR CONTROLLER PHOTO EYE. PROVIDE 0.75" CONDUIT FROM DOOR CONTROLLER TO PHOTO EYES. INSTALL PHOTO EYE PER MANUFACTURER'S INSTRUCTIONS.
12. PROVIDE SWITCH FOR ENTRY GATE LIGHT.

NO.	DATE	BY	REVISION

NOTICE
0 ½ 1
IF THIS BAR DOES NOT MEASURE 1" THEN DRAWING IS NOT TO SCALE

MB DESIGNED
JL DRAWN
BP CHECKED

REGISTERED PROFESSIONAL ENGINEER 86683 Digitally Signed OREGON MAY 08, 2012 BENJAMIN E. PERRY
EXPIRES: 12-31-2022

WEST YOST Water. Engineered.

Landis Consulting
ENGINEERING SERVICES
6446 Fairway Ave. SE, Suite 220
Salem, OR 97306
503-584-1576
www.landisconsulting.com

Sweet Home Oregon at its best!

MAHLER WATER RECLAMATION FACILITY IMPROVEMENTS PROJECT PHASE 1

MAIN ELECTRICAL & BLOWER BUILDING FLOOR PLAN

PROJECT NO.: 936-50-21-09 | SCALE: AS NOTED | DATE: AUGUST 2022

SHEET E-104

DocuSign Envelope ID: 09934EE9-0C55-40A3-8631-9C0AF6797111

G:\PROJECTS\103 - West Yost Associates\1032109 - Sweet Home Wwtp Phase 1 Design\Design\(2) Drawings\Current\sweet Home Wwtp Phase 1 Design\Sheets\E-105 Main Electrical & Blower Building Elevations.dwg E-105 Main Electrical & Blower Building Elevations 7/28/2022 6:42 PM JLUTE 24.1s (LMS Tech)

SHEET KEY NOTES

1. PART OF PHASE 2, NOT PART OF THIS SCOPE.

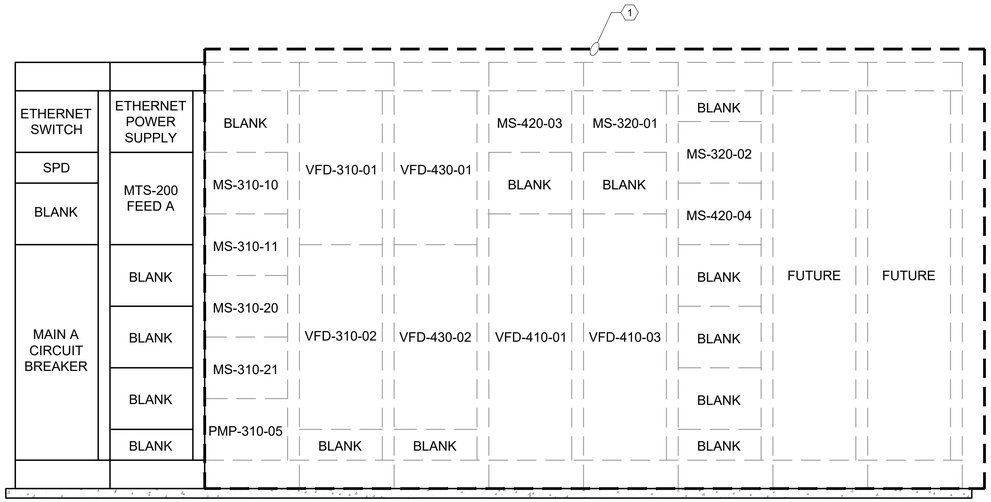

1 MCC-200 NORTH ELEVATION - A-SIDE
SCALE: 3/4" = 1'-0"

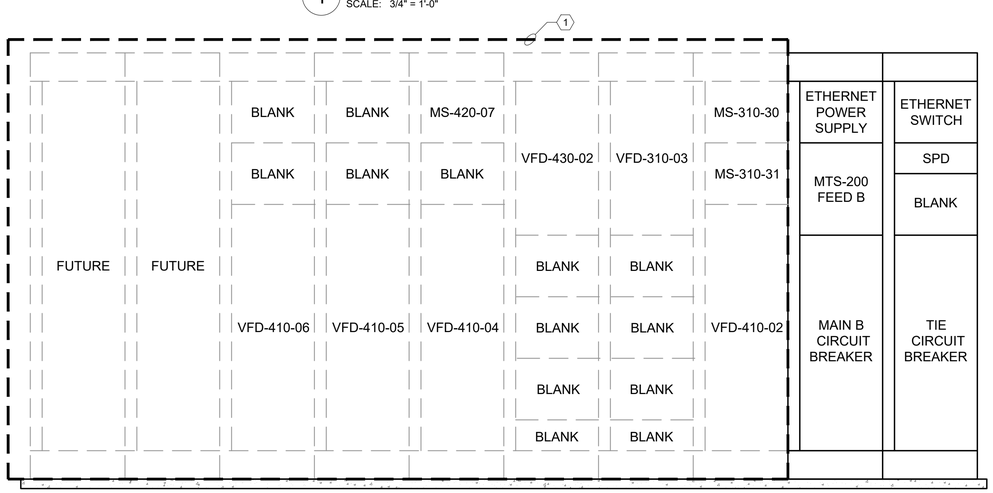

2 MCC-200 SOUTH ELEVATION - B-SIDE
SCALE: 3/4" = 1'-0"

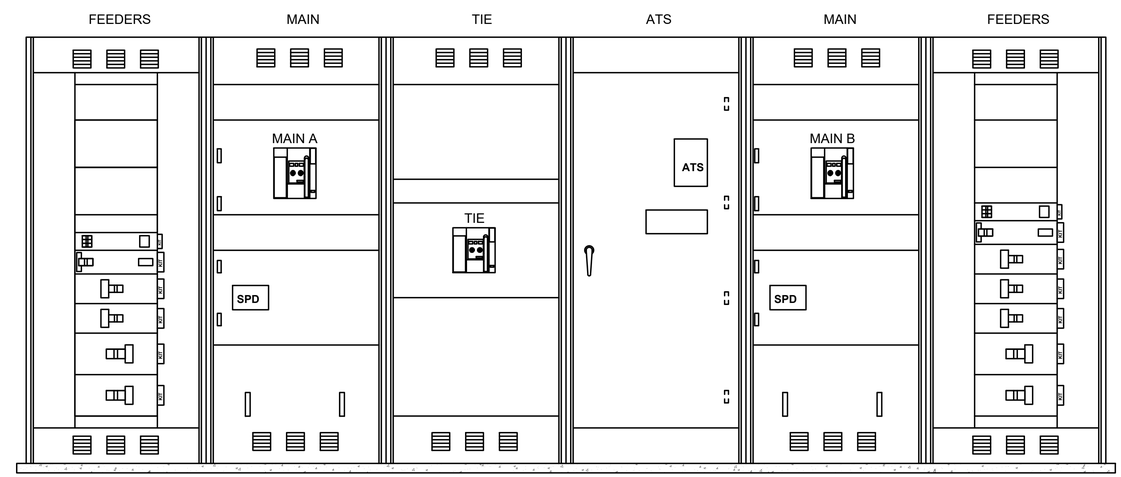

3 MSB-1 ELEVATION
SCALE: 3/4" = 1'-0"

NO.	DATE	BY	REVISION

NOTICE
0 ½ 1
IF THIS BAR DOES NOT MEASURE 1" THEN DRAWING IS NOT TO SCALE

MB DESIGNED
JL DRAWN
BP CHECKED

REGISTERED PROFESSIONAL ENGINEER 86683 OREGON MAY 08, 2012 BENJAMIN E. PERRY
Digitally Signed
EXPIRES: 12-31-2022

WEST YOST
Water. Engineered.

Landis Consulting
ENGINEERING SERVICES
6446 Fairway Ave. SE, Suite 220
Salem, OR 97306
503-584-1576
www.landisconsulting.com

Sweet Home Oregon at its best!

MAHLER WATER RECLAMATION FACILITY IMPROVEMENTS PROJECT PHASE 1

MAIN ELECTRICAL & BLOWER BUILDING
MCC-200 & MSB-1 ELEVATIONS

PROJECT NO.: 936-50-21-09 | SCALE: AS NOTED | DATE: AUGUST 2022

SHEET
E-105

DocuSign Envelope ID: 09934EE9-0C55-40A3-8631-9C0AF6797111

G:\PROJECTS\103 - West Yost Associates\1032109 - Sweet Home Wwtp Phase 1 Design\Design\(2) Drawings\Current\sweet Home Wwtp Phase 1 Design\Sheets\E-106 South Electrical Building Demolition Floor Plan.dwg E-106 South Electrical Building Demolition Floor Plan 7/28/2022 6:04 PM JLUTE 24.1s (LMS Tech)

GENERAL SHEET NOTES

1. CONTRACTOR SHALL COORDINATE DEMOLITION / SEQUENCING OF THE EXISTING SERVICE AND MAIN FEED TO THE SITE PER THE MECHANICAL AND CIVIL DRAWINGS.

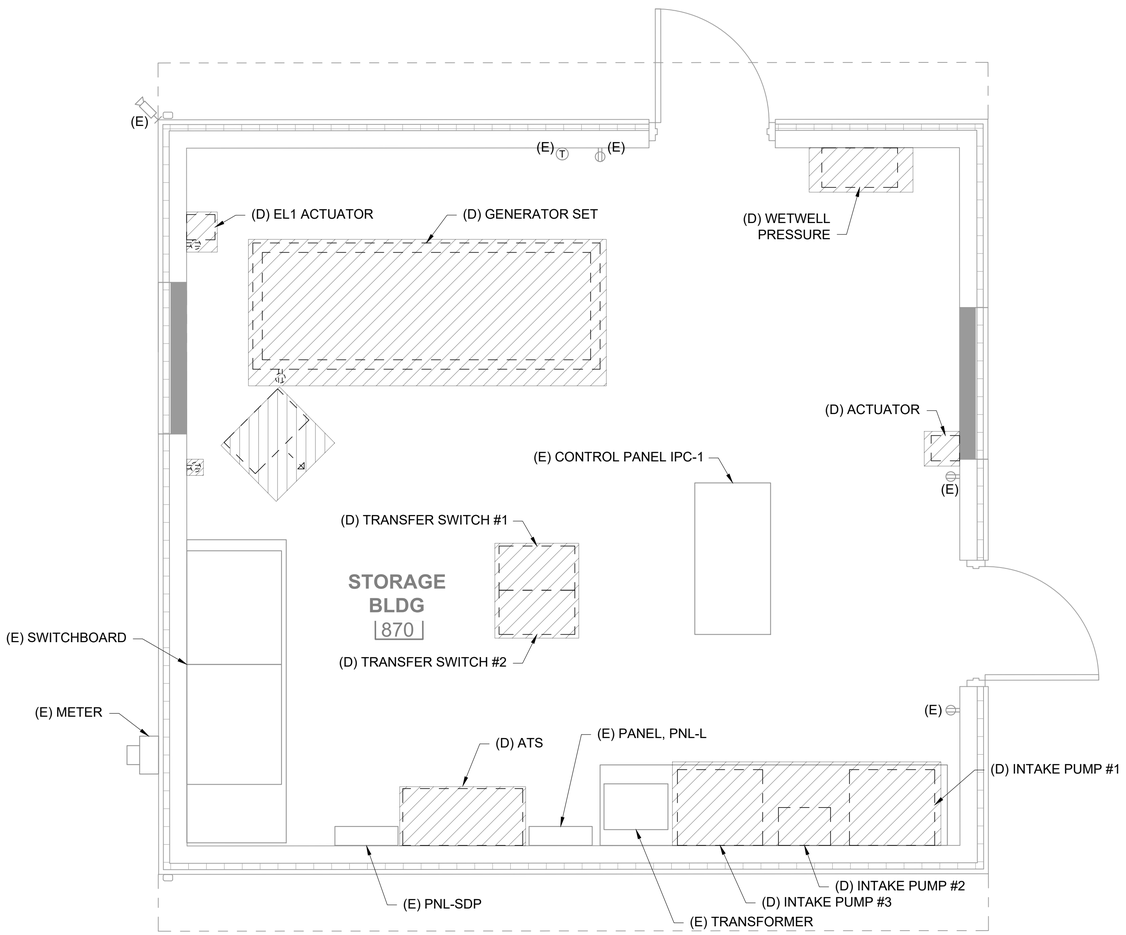

1 SOUTH ELECTRICAL BUILDING DEMOLITION FLOOR PLAN
SCALE: 1/2" = 1'-0"

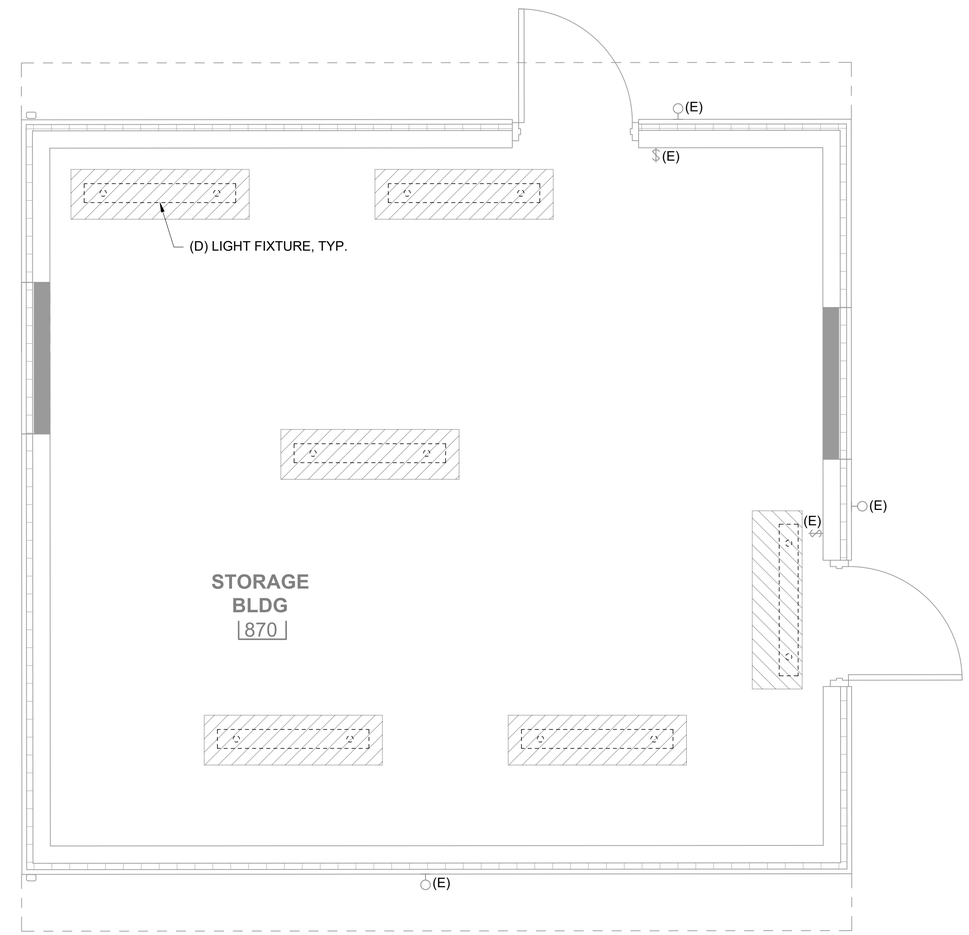

2 SOUTH ELECTRICAL BUILDING DEMOLITION CEILING PLAN
SCALE: 1/2" = 1'-0"

NO.	DATE	BY	REVISION

NOTICE
0 ½ 1
IF THIS BAR DOES NOT MEASURE 1" THEN DRAWING IS NOT TO SCALE

MB DESIGNED
JL DRAWN
BP CHECKED

REGISTERED PROFESSIONAL ENGINEER 86683 OREGON MAY 08, 2012 BENJAMIN E. PERRY
Digitally Signed
EXPIRES: 12-31-2022

WEST YOST
Water. Engineered.

Landis Consulting
ENGINEERING SERVICES
6446 Fairway Ave. SE, Suite 220
Salem, OR 97306
503-584-1576
www.landisconsulting.com

Sweet Home Oregon at its best!

MAHLER WATER RECLAMATION FACILITY IMPROVEMENTS PROJECT PHASE 1

SOUTH ELECTRICAL BUILDING DEMOLITION FLOOR PLAN

PROJECT NO.: 936-50-21-09 | SCALE: AS NOTED | DATE: AUGUST 2022

SHEET
E-106

DocuSign Envelope ID: 09934EE9-0C55-40A3-8631-9C0AF6797111

G:\PROJECTS\103 - West Yost Associates\1032109 - Sweet Home Wwtp Phase 1 Design\Design\(2) Drawings\Current\sweet Home Wwtp Phase 1 Design\Sheets\E-107 South Electrical Building New Floor Plan.dwg E-107 South Electrical Building New Floor Plan 7/28/2022 6:44 PM JLUTE 24.1s (LMS Tech)

GENERAL SHEET NOTES

1. ALL EXIT SIGNS AND EMERGENCY LIGHTS SHALL BE WIRED TO LOCAL LIGHTING BRANCH CIRCUIT, AHEAD OF ALL SWITCHING.

SHEET KEY NOTES

1. REFERENCE PANEL SCHEDULES FOR NEW ELECTRICAL LOADS THAT SHALL BE INSTALLED IN THE EXISTING PANELBOARD. PROVIDING WIRE-LOOP IN THE PANELBOARD FOR EXTENDING AND REFEEDING THESE NEW CIRCUITS AT PHASE 2.
2. OWNER FURNISHED, CONTRACTOR INSTALLED EQUIPMENT.
3. PROVIDE 48"H X 48"W X 12"D STAINLESS STEEL, NEMA 4X WALL MOUNTED JUNCTION BOX.
4. PROVIDE FUSED DISCONNECT FOR CU-1.

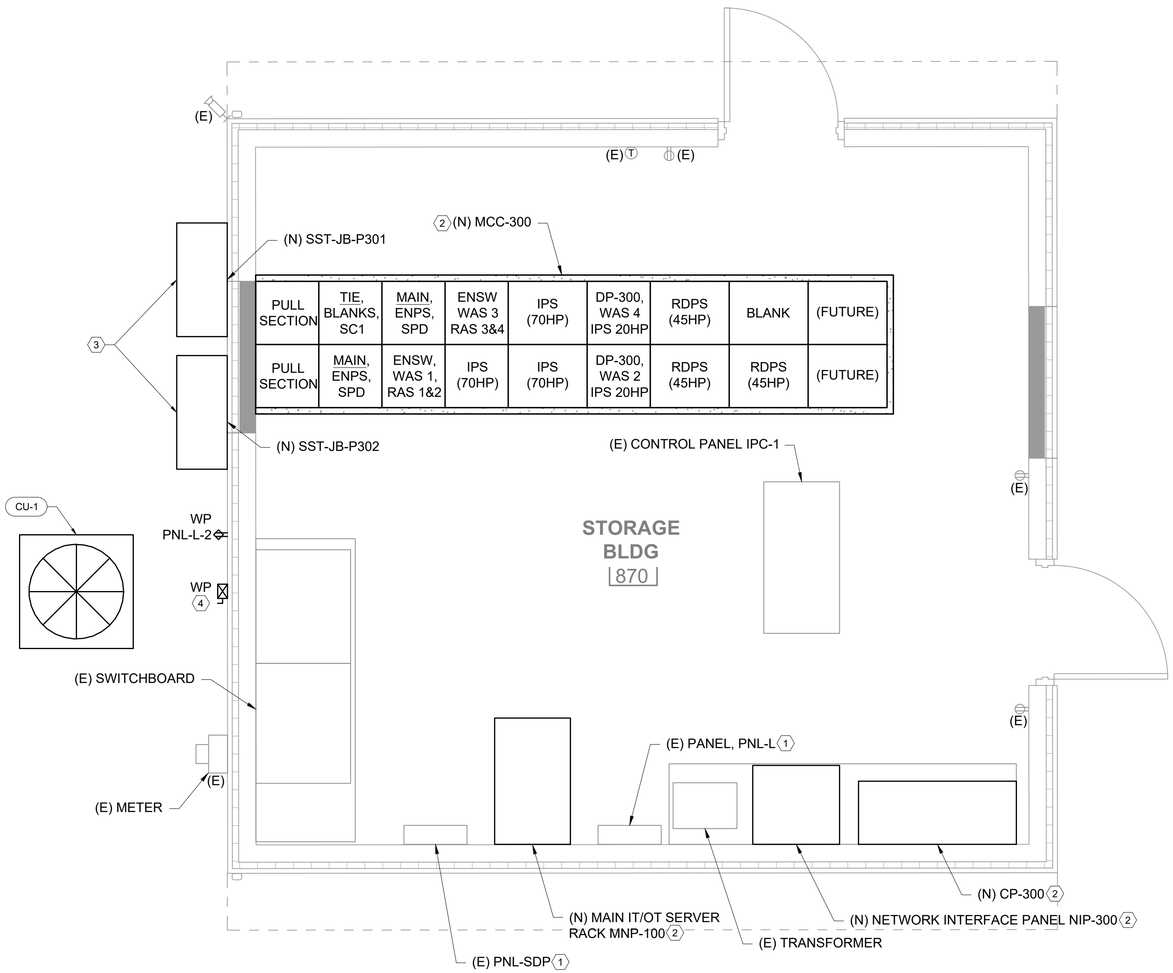

1 SOUTH ELECTRICAL BUILDING NEW FLOOR PLAN
SCALE: 1/2" = 1'-0"

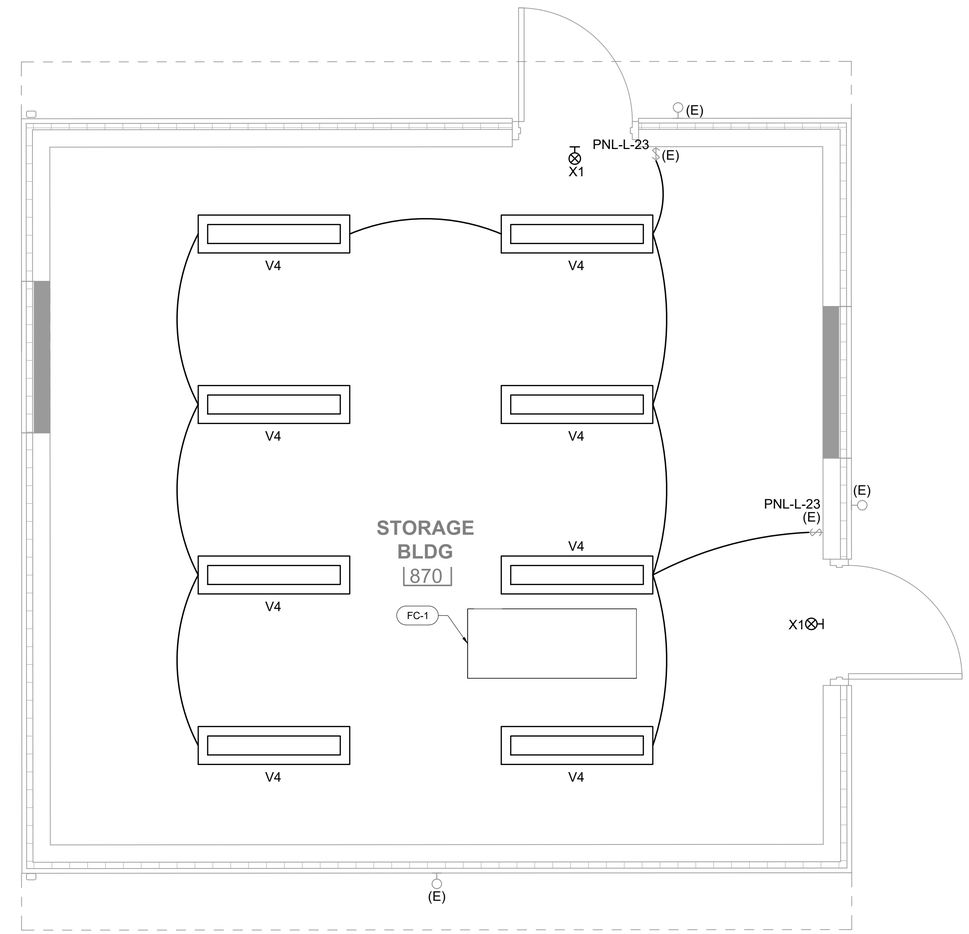

2 SOUTH ELECTRICAL BUILDING CEILING PLAN
SCALE: 1/2" = 1'-0"

NO.	DATE	BY	REVISION

NOTICE
0 ½ 1
IF THIS BAR DOES NOT MEASURE 1" THEN DRAWING IS NOT TO SCALE

MB DESIGNED
JL DRAWN
BP CHECKED

REGISTERED PROFESSIONAL ENGINEER 86683 OREGON MAY 08, 2012 BENJAMIN E. PERRY
Digitally Signed
EXPIRES: 12-31-2022

WEST YOST
Water. Engineered.

Landis Consulting
ENGINEERING SERVICES
6446 Fairway Ave. SE, Suite 220
Salem, OR 97306
503-584-1576
www.landisconsulting.com

Sweet Home Oregon at its best!

MAHLER WATER RECLAMATION FACILITY IMPROVEMENTS PROJECT PHASE 1

SOUTH ELECTRICAL BUILDING NEW FLOOR PLAN

PROJECT NO.: 936-50-21-09 | SCALE: AS NOTED | DATE: AUGUST 2022

SHEET
E-107

DocuSign Envelope ID: 09934EE9-0C55-40A3-8631-9C0AF6797111

G:\PROJECTS\103 - West Yost Associates\1032109 - Sweet Home Wwtp Phase 1 Design\Design\(2) Drawings\Current\sweet Home Wwtp Phase 1 Design\Sheets\E-108 South Electrical Building MCC-300 Elevations.dwg E-108 South Electrical Building MCC-300 Elevations 7/28/2022 6:45 PM JLUTE 24.1s (LMS Tech)

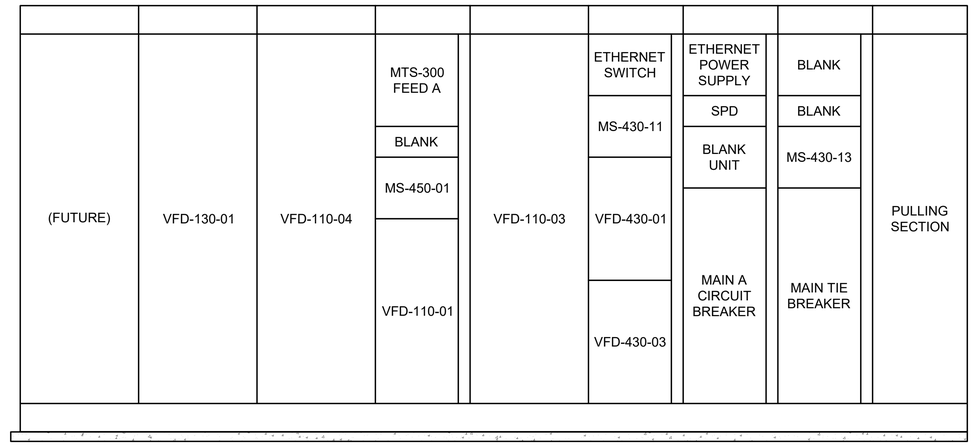

1 MCC-300 NORTH ELEVATION - A SIDE
SCALE: 3/4" = 1'-0"

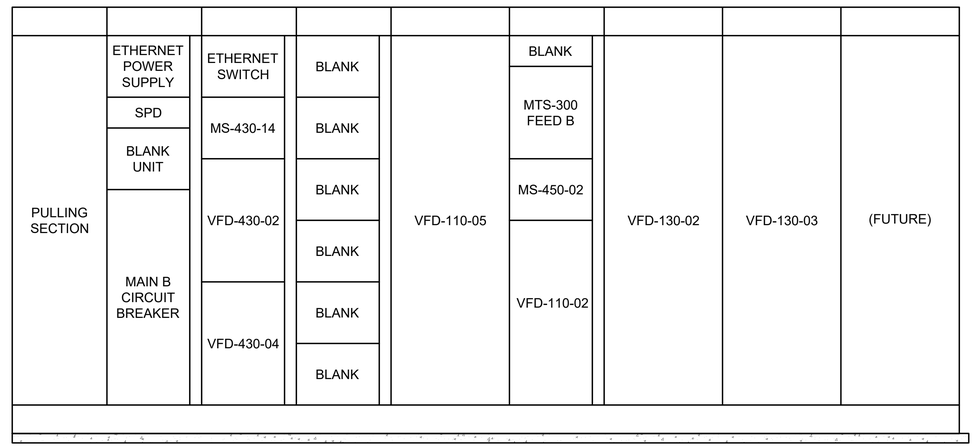

2 MCC-300 SOUTH ELEVATION - B SIDE
SCALE: 3/4" = 1'-0"

NO.	DATE	BY	REVISION

NOTICE
0 ½ 1
IF THIS BAR DOES NOT MEASURE 1" THEN DRAWING IS NOT TO SCALE

MB DESIGNED
JL DRAWN
BP CHECKED

REGISTERED PROFESSIONAL ENGINEER 86683 OREGON MAY 08, 2012 BENJAMIN E. PERRY
Digitally Signed
EXPIRES: 12-31-2022

WEST YOST
Water. Engineered.

Landis Consulting
ENGINEERING SERVICES
6446 Fairway Ave. SE, Suite 220
Salem, OR 97306
503-584-1576
www.landisconsulting.com

Sweet Home Oregon at its best!

MAHLER WATER RECLAMATION FACILITY IMPROVEMENTS PROJECT PHASE 1

SOUTH ELECTRICAL BUILDING
MCC-300 ELEVATIONS

PROJECT NO.: 936-50-21-09 | SCALE: AS NOTED | DATE: AUGUST 2022

SHEET
E-108
97 of 135

DocuSign Envelope ID: 09934EE9-0C55-40A3-8631-9C0AF6797111

G:\PROJECTS\103 - West Yost Associates\1032109 - Sweet Home Wwtp Phase 1 Design\Design\(2) Drawings\Current\sweet Home Wwtp Phase 1 Design\Sheets\E-110 Influent Pump Station - Overall Site Plan.dwg E-110 Influent Pump Station - Overall Site Plan 7/28/2022 6:03 PM JLUTE 24.1s (LMS Tech)

SHEET KEY NOTES

1. STUB UP CONDUIT TO JB-S300 AND PENETRATE WALL TO NIP-300. PROVIDE 24"W X 24"H X 12"D STAINLESS TEEL NEMA 4X WALL MOUNTED ENCLOSURE.
2. TEMPORARY GENERATOR (OFCI).
3. TEMPORARY ATS (CFCI).
4. CONTRACTOR SHALL INTERCEPT EXISTING UTILITY FEED AND WIRE TO CONTRACTOR PROVIDED TEMPORARY SERVICE ENTRANCE RATED ATS. ATS LOAD SIDE SHALL FEED THE EXISTING SERVICE SWITCHBOARD.
5. PROVIDE LARGE IN-GROUND BOX. REFERENCE KEYNOTE (260533.M02).
6. PROVIDE 30"W X 36"H X 12"D STAINLESS STEEL NEMA 4X WALL MOUNTED ENCLOSURE FOR JUNCTION BOX.

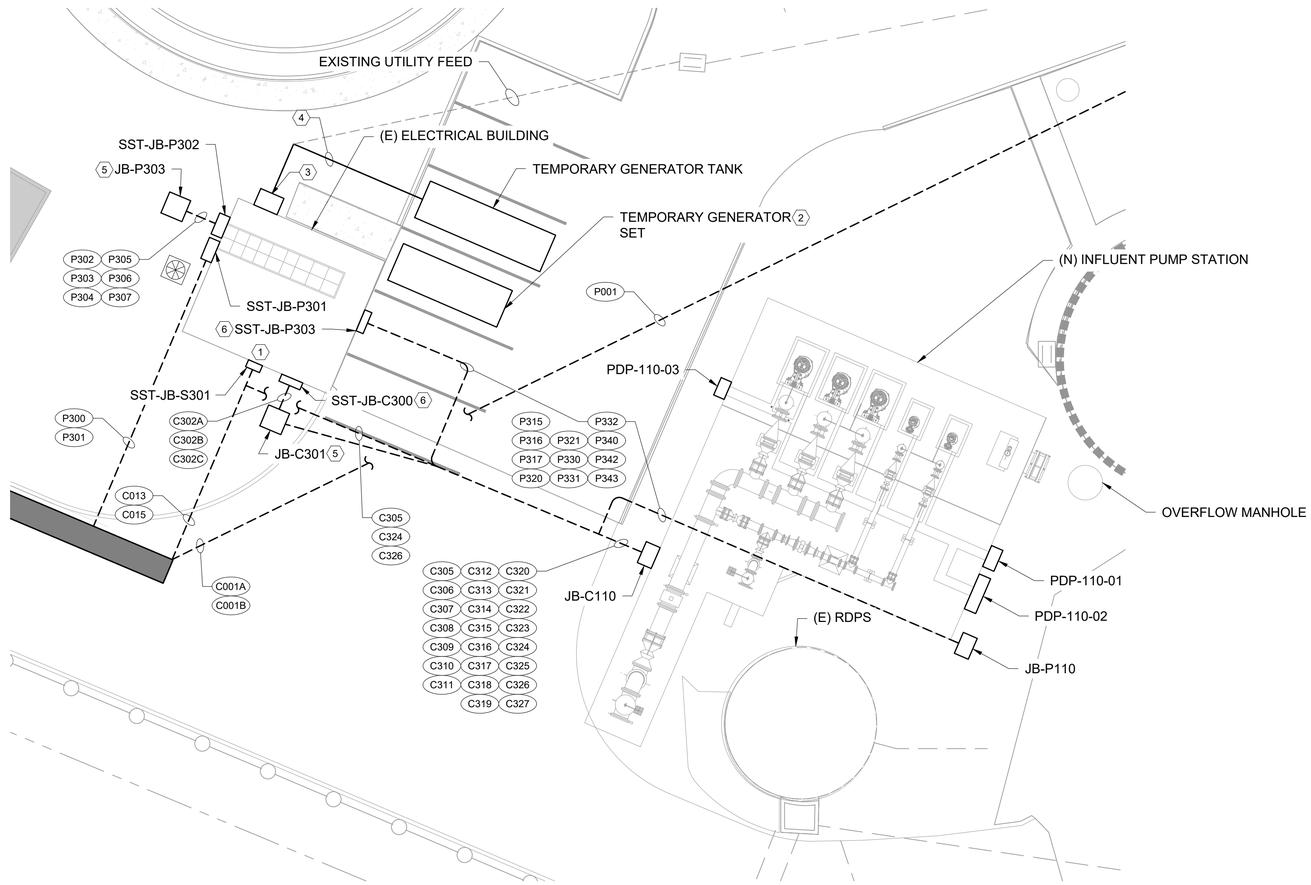

1 INFLUENT PUMP STATION - OVERALL SITE PLAN
SCALE: 1" = 10'
0' 5' 10'

NO.	DATE	BY	REVISION

NOTICE
0 ½ 1
IF THIS BAR DOES NOT MEASURE 1" THEN DRAWING IS NOT TO SCALE

MB DESIGNED
JL DRAWN
BP CHECKED

REGISTERED PROFESSIONAL ENGINEER 86683 Digitally Signed OREGON MAY 08, 2012 BENJAMIN E. PERRY
EXPIRES: 12-31-2022

WEST YOST Water. Engineered.

Landis Consulting
ENGINEERING SERVICES
6446 Fairway Ave. SE, Suite 220
Salem, OR 97306
503-584-1576
www.landisconsulting.com

Sweet Home Oregon at its best!

MAHLER WATER RECLAMATION FACILITY IMPROVEMENTS PROJECT PHASE 1

INFLUENT PUMP STATION OVERALL SITE PLAN

PROJECT NO.: 936-50-21-09 | SCALE: AS NOTED | DATE: AUGUST 2022

SHEET E-110

DocuSign Envelope ID: 09934EE9-0C55-40A3-8631-9C0AF6797111

G:\PROJECTS\103 - West Yost Associates\1032109 - Sweet Home Wwtp Phase 1 Design\Design\(2) Drawings\Current\sweet Home Wwtp Phase 1 Design\Sheets\1032109-E-111 Influent Pump Station Hazardous Location Plan.dwg
1032109-E-111 Influent Pump Station Hazardous Location Plan 7/28/2022 6:02 PM JLUTE 24.1s (LMS Tech)

CLASSIFICATION LEGEND:

HAZARDOUS CLASSIFICATION CLASS I DIV 1 BOUNDARY. INSIDE WET WELL.

HAZARDOUS CLASSIFICATION CLASS I DIV 2 BOUNDARY. WET WELL OPENING: INCLUDES 3'-0" BEYOND DIV 1 ZONE AND VERTICALLY 1'-6".

UNCLASSIFIED AREA.

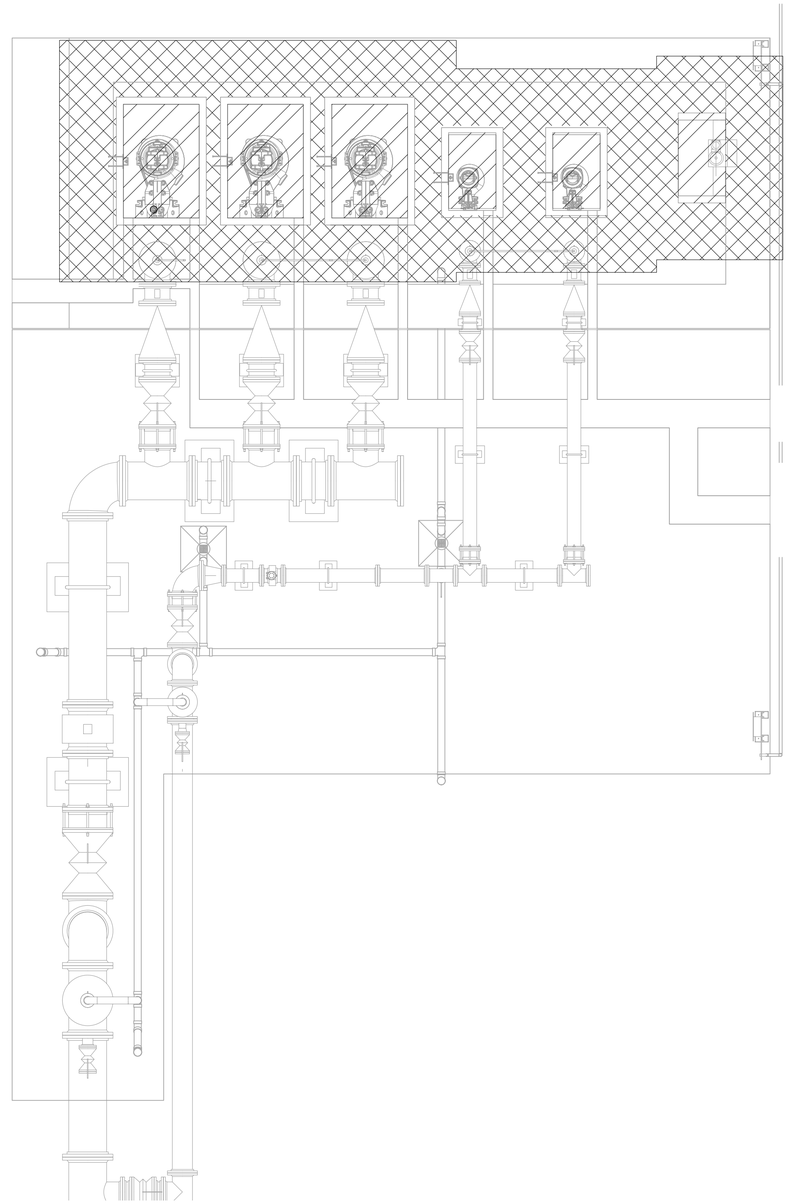

1 INFLUENT PUMP STATION HAZARDOUS LOCATION PLAN
SCALE: 1/4" = 1'-0"

NO.	DATE	BY	REVISION

NOTICE
0 ½ 1
IF THIS BAR DOES NOT MEASURE 1" THEN DRAWING IS NOT TO SCALE

MB DESIGNED
JL DRAWN
BP CHECKED

REGISTERED PROFESSIONAL ENGINEER 86683 OREGON MAY 08, 2012 BENJAMIN E. PERRY
Digitally Signed
EXPIRES: 12-31-2022

WEST YOST
Water. Engineered.

Landis Consulting
ENGINEERING SERVICES
6446 Fairway Ave. SE, Suite 220
Salem, OR 97306
503-584-1576
www.landisconsulting.com

Sweet Home Oregon at its best!

MAHLER WATER RECLAMATION FACILITY IMPROVEMENTS PROJECT PHASE 1

INFLUENT PUMP STATION HAZARDOUS LOCATION PLAN

PROJECT NO.: 936-50-21-09 | SCALE: AS NOTED | DATE: AUGUST 2022

SHEET
E-111
99 of 135

DocuSign Envelope ID: 09934EE9-0C55-40A3-8631-9C0AF6797111

G:\PROJECTS\103 - West Yost Associates\1032109 - Sweet Home Wwtp Phase 1 Design\Design\(2) Drawings\Current\sweet Home Wwtp Phase 1 Design\Sheets\E-112 Influent Pump Station - Electrical Plan & Section.dwg E-112 Influent Pump Station - Electrical Plan & Section 7/28/2022 6:46 PM JLUTE 24.1s (LMS Tech)

SHEET KEY NOTES

1. SITE LIGHT. PROVIDE LIGHT POLE BASE PER DRAWING E-003, DETAIL 101.
2. REFERENCE SHEET E-113 FOR PDP STAND AND DETAILS.
3. REFERENCE SHEET E-906 FOR DETAILS ON INTRINSICALLY SAFE RELAY / BARRIER TERMINATIONS.
4. STUB UP CONDUIT AND PROVIDE LIQUID TIGHT ALUMINUM FLEX TO THE EQUIPMENT / INSTRUMENT.
5. COORDINATE DEPTHS OF LEVEL INSTRUMENTS WITH CIVIL / MECHANICAL.
6. PROVIDE SWITCH FOR IPS LIGHTS, PER P334.
7. OVERFLOW MANHOLE. COORDINATE LOCATION PER CIVIL DRAWINGS.
8. PROVIDE LARGE IN-GROUND BOX. REFERENCE KEYNOTE (260533.M21).

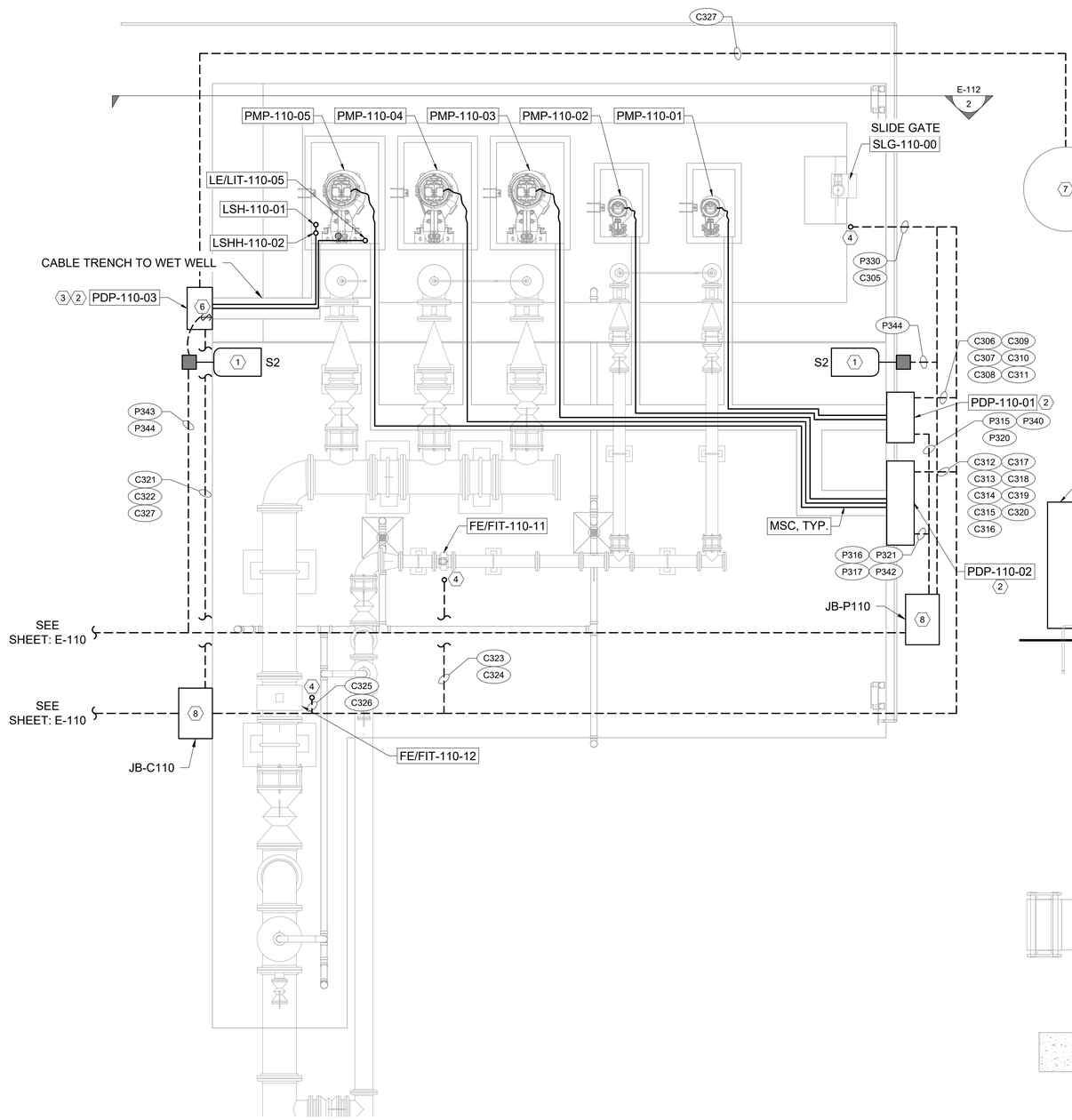

1 INFLUENT PUMP STATION ELECTRICAL TOP PLAN
SCALE: 1/4" = 1'-0"

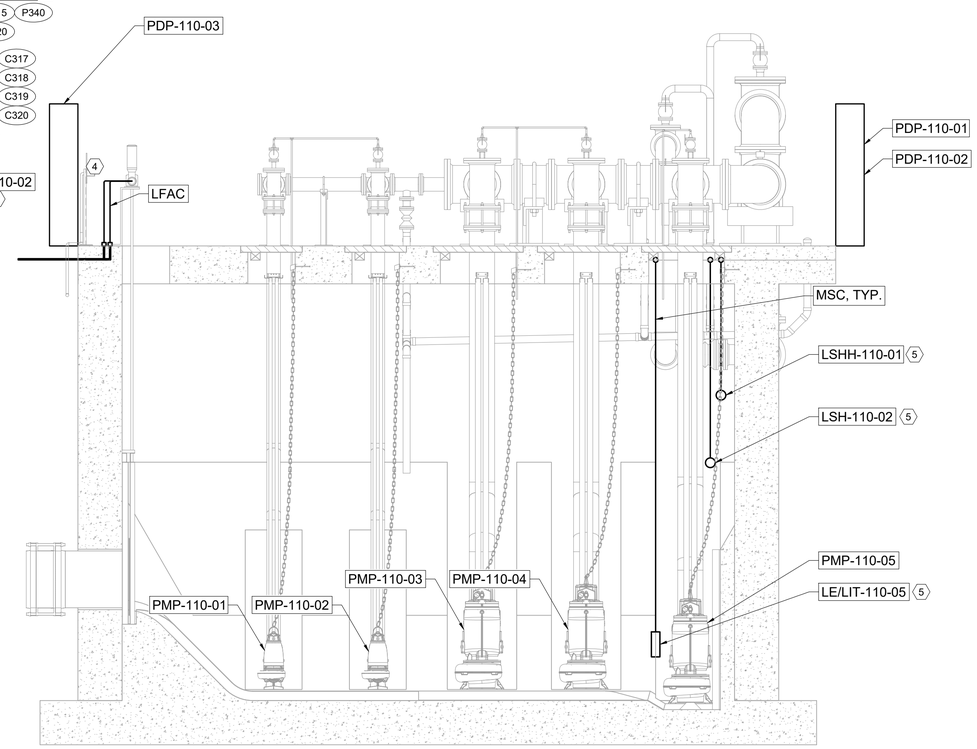

2 INFLUENT PUMP STATION ELECTRICAL SECTION DETAIL
SCALE: 1/4" = 1'-0"

NO.	DATE	BY	REVISION

NOTICE
0 ½ 1
IF THIS BAR DOES NOT MEASURE 1" THEN DRAWING IS NOT TO SCALE

MB DESIGNED
JL DRAWN
BP CHECKED

REGISTERED PROFESSIONAL ENGINEER 86683 OREGON BENJAMIN E. PERRY
Digitally Signed
MAY 08, 2012
EXPIRES: 12-31-2022

WEST YOST
Water. Engineered.

Landis Consulting
ENGINEERING SERVICES
6446 Fairway Ave. SE, Suite 220
Salem, OR 97306
503-584-1576
www.landisconsulting.com

Sweet Home Oregon at its best!

MAHLER WATER RECLAMATION FACILITY IMPROVEMENTS PROJECT PHASE 1

INFLUENT PUMP STATION ELECTRICAL PLAN & SECTION

PROJECT NO.: 936-50-21-09 | SCALE: AS NOTED | DATE: AUGUST 2022

SHEET
E-112
100 of 135

DocuSign Envelope ID: 09934EE9-0C55-40A3-8631-9C0AF6797111

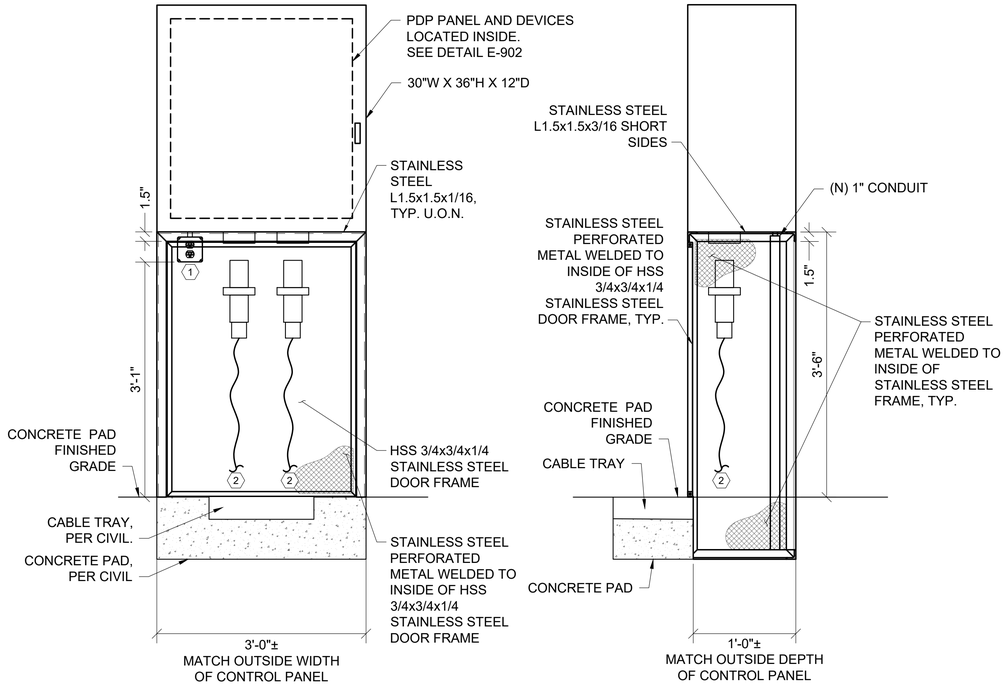

1 PDP-110-01 ELEVATION DETAIL 3
SCALE: NTS

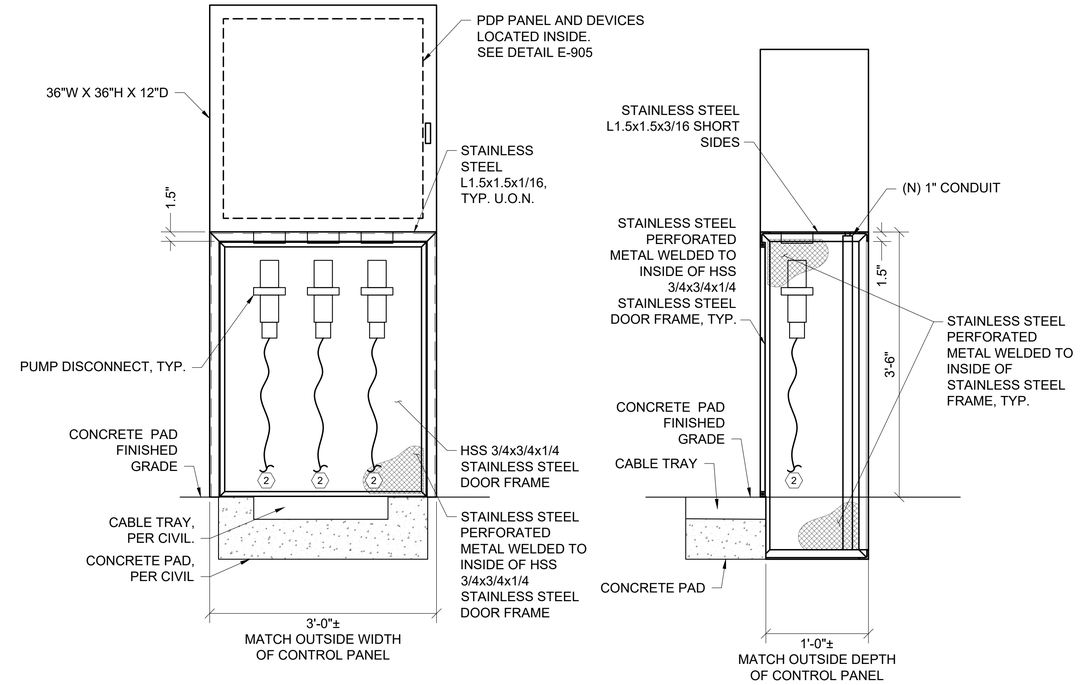

2 PDP-110-02 ELEVATION DETAIL 4
SCALE: NTS

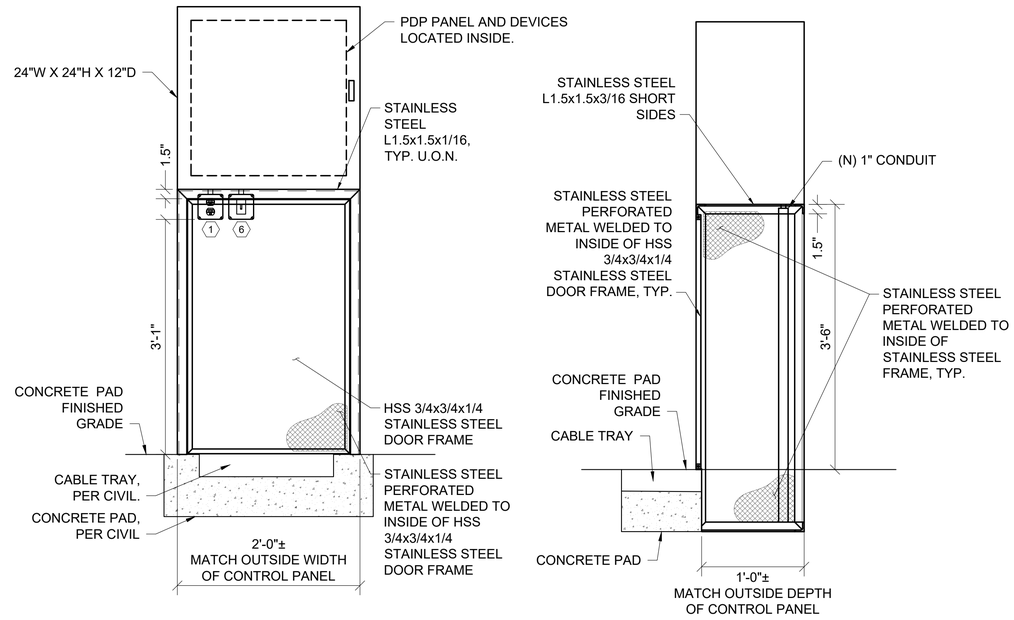

3 PDP-110-03 ELEVATION DETAIL 5
SCALE: NTS

SHEET KEY NOTES

1. CONVENIENCE RECEPTACLE WITH WP COVER. THE RECEPTACLE SHALL BE MOUNTED DIRECTLY BELOW THE PUMP DISCONNECT PANEL (PDP) VIA A CLOSE NIPPLE. THE DEVICE BOX AND COVER SHALL BE PVC COATED GRC TYP. THE RECEPTACLE COVER SHALL BE IN-USE TYPE.
2. CABLES ROUTE TO WET WELL VIA CABLE TRAY, SEE SHEET E-112.
3. REFERENCE DRAWING E-902 FOR PDP-110-01 LOCAL CONTROL STATION ELEVATION DETAIL.
4. REFERENCE DRAWING E-904 FOR PDP-110-02 LOCAL CONTROL STATION ELEVATION DETAIL.
5. REFERNCE DRAWING E-905 PDP-110-03 LOCAL CONTROL STATION ELEVATION AND INTRINSICALLY SAFE WIRING DETAIL.
6. PROVIDE LIGHT SWITCH WITH WP COVER. WIRE TO EXTERIOR LIGHTS AT THE INFLUENT PUMP STATION.

NO.	DATE	BY	REVISION

NOTICE
0 ½ 1
IF THIS BAR DOES NOT MEASURE 1" THEN DRAWING IS NOT TO SCALE

MB DESIGNED
JL DRAWN
BP CHECKED

REGISTERED PROFESSIONAL ENGINEER 86683 OREGON MAY 08, 2012 BENJAMIN E. PERRY
Digitally Signed
EXPIRES: 12-31-2022

WEST YOST
Water. Engineered.

Landis Consulting
ENGINEERING SERVICES
6446 Fairway Ave. SE, Suite 220
Salem, OR 97306
503-584-1576
www.landisconsulting.com

Sweet Home Oregon at its best!

MAHLER WATER RECLAMATION FACILITY IMPROVEMENTS PROJECT PHASE 1

INFLUENT PUMP STATION
PUMP DISCONNECT PANEL & STAND ELEVATIONS

PROJECT NO.: 936-50-21-09 | SCALE: AS NOTED | DATE: AUGUST 2022

SHEET
E-113
101 of 135

G:\PROJECTS\103 - West Yost Associates\1032109 - Sweet Home Wwtp Phase 1 Design\Design\(2) Drawings\Current\sweet Home Wwtp Phase 1 Design\Sheets\E-113 Influent Pump Station - Pump Panel & Stand Elevations.dwg E-113
Influent Pump Station - Pump Panel & Stand Elevations 7/28/2022 6:50 PM JLUTE 24.1s (LMS Tech)

DocuSign Envelope ID: 09934EE9-0C55-40A3-8631-9C0AF6797111

G:\PROJECTS\103 - West Yost Associates\1032109 - Sweet Home Wwtp Phase 1 Design\Design\(2) Drawings\Current\sweet Home Wwtp Phase 1 Design\Sheets\E-901 Influent Pump Station - Motor Schematic 1.dwg E-901 Influent Pump Station - Motor Schematic 1 7/28/2022 6:02 PM JLUTE 24.1s (LMS Tech)

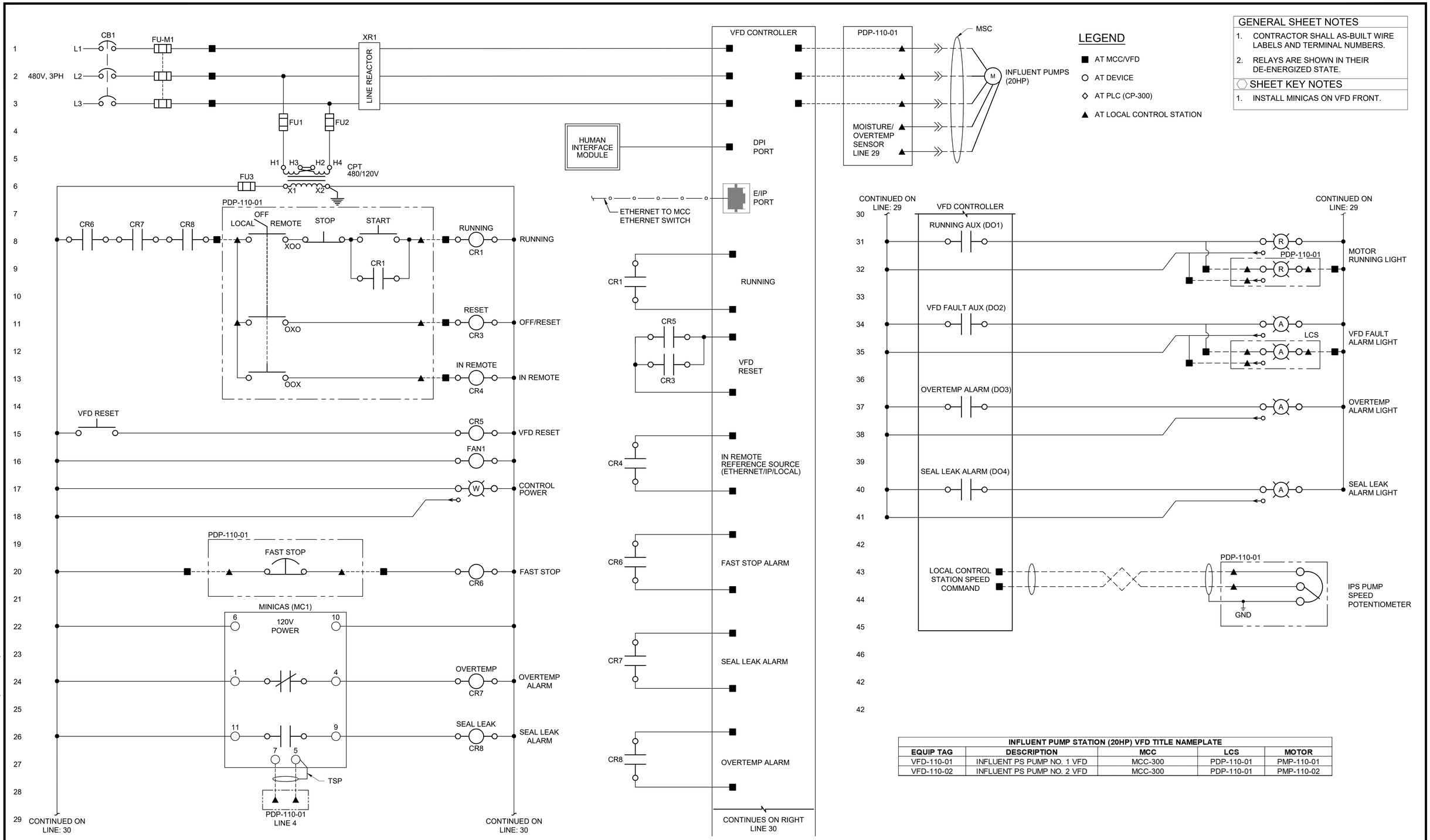

INFLUENT PUMP STATION (20HP) VFD TITLE NAMEPLATE				
EQUIP TAG	DESCRIPTION	MCC	LCS	MOTOR
VFD-110-01	INFLUENT PS PUMP NO. 1 VFD	MCC-300	PDP-110-01	PMP-110-01
VFD-110-02	INFLUENT PS PUMP NO. 2 VFD	MCC-300	PDP-110-01	PMP-110-02

NO.	DATE	BY	REVISION

NOTICE
0 ½ 1
IF THIS BAR DOES NOT MEASURE 1" THEN DRAWING IS NOT TO SCALE

MB DESIGNED
JL DRAWN
BP CHECKED

REGISTERED PROFESSIONAL ENGINEER 86683 OREGON BENJAMIN E. PERRY
Digitally Signed
MAY 08, 2012
EXPIRES: 12-31-2022

WEST YOST
Water. Engineered.

Landis Consulting
ENGINEERING SERVICES
6446 Fairway Ave. SE, Suite 220
Salem, OR 97306
503-584-1576
www.landisconsulting.com

Sweet Home Oregon at its best!

MAHLER WATER RECLAMATION FACILITY IMPROVEMENTS PROJECT PHASE 1

INFLUENT PUMP STATION MOTOR SCHEMATIC 1

PROJECT NO.: 936-50-21-09 | SCALE: AS NOTED | DATE: AUGUST 2022

SHEET
E-901
102 of 135

DocuSign Envelope ID: 09934EE9-0C55-40A3-8631-9C0AF6797111

G:\PROJECTS\103 - West Yost Associates\1032109 - Sweet Home Wwtp Phase 1 Design\Design\(2) Drawings\Current\sweet Home Wwtp Phase 1 Design\Sheets\E-902 Influent Pump Station PDP-110-01 LCS.dwg E-902 Influent Pump Station
PDP-110-01 LCS 7/28/2022 6:50 PM JLUTE 24.1s (LMS Tech)

GENERAL SHEET NOTES

1. REFERENCE DRAWING E-112 FOR PDP STAND DETAILS FOR PDP-110-01.

SHEET KEY NOTES

1. SEE POWER AND CONTROL CONDUIT SCHEDULES FOR DETAILS ON CONDUITS / CABLES ENTERING AND EXITING THE PUMP DISCONNECT PANEL.
2. ALL PILOT DEVICES SHALL BE INSTALLED ON A MANUFACTURER SUPPLIED SWING-OUT DEADFRONT DOOR THE NAMEPLATE SHALL BE INSTALLED ON THE EXTERIOR DOOR OF THE ENCLOSURE.

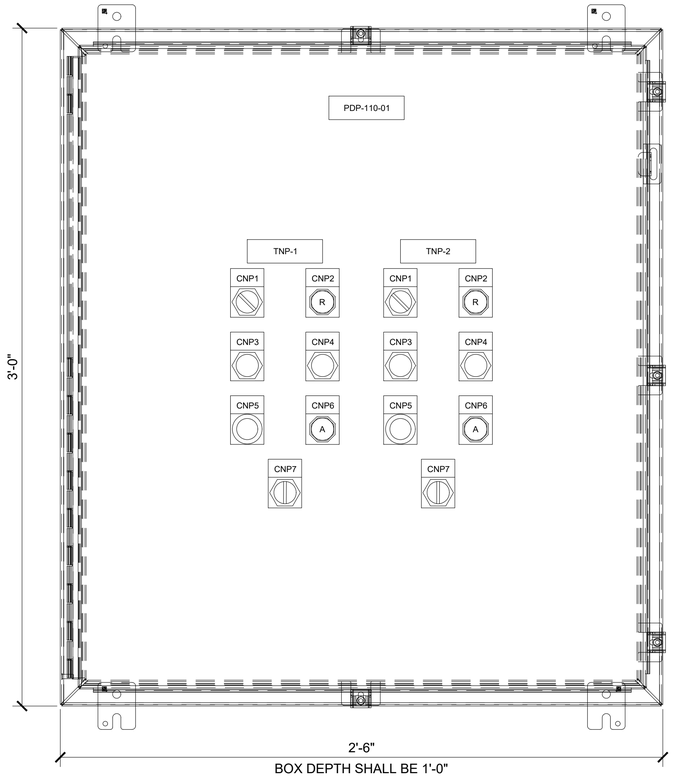

1 PDP-110-01 FRONT ELEVATION (2)
SCALE: NTS

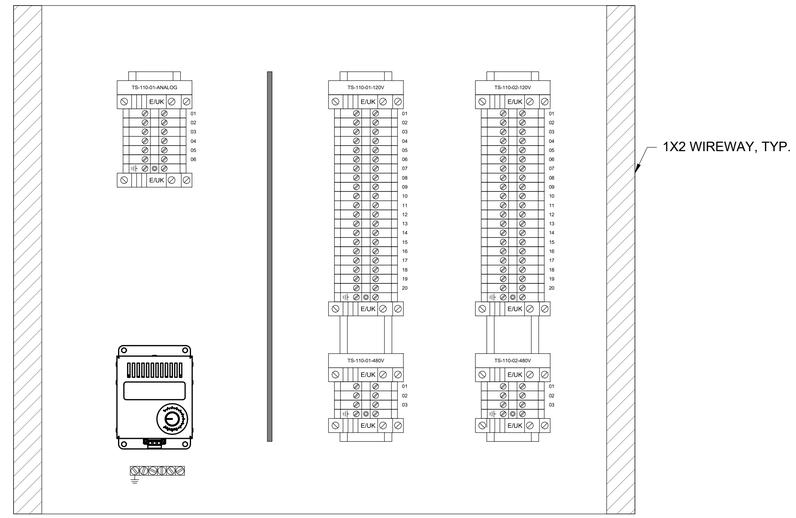

2 PDP-110-01 INTERIOR ELEVATION
SCALE: NTS

INFLUENT PUMP STATION LCS TITLE NAMEPLATE		
TNP	EQUIPMENT TAG	DESCRIPTION
1	INFLUENT PUMP NO.1	INFLUENT PUMP NO.1 LCS
2	INFLUENT PUMP NO.2	INFLUENT PUMP NO.2 LCS

INFLUENT PUMP STATION LCS DEVICE TITLE NAMEPLATE	
CNP	INSCRIPTION
1	LOCAL / OFF / REMOTE (3-POS)
2	RUNNING INDICATOR LIGHT (RED)
3	START PUSHBUTTON
4	STOP PUSHBUTTON
5	FAST STOP
6	VFD FAULT ALARM (AMBER)
7	SPEED SETPOINT

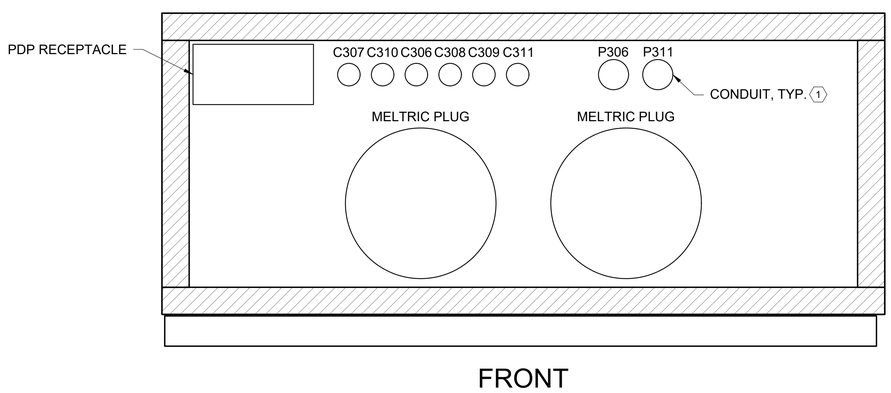

3 PENETRATION DRAWING VIEW
SCALE: NTS

INFLUENT PUMP STATION LOCAL CONTROL STATION PARTS LIST		
QUANTITY	REFERENCE KEYNOTE #	DESCRIPTION
1	407800.E01	STAINLESS STEEL, NEMA 4X ENCLOSURES
1	407800.H17	ENCLOSURE HEATER (100W)
2	407800.S01	SELECTOR SWITCHES
2	407800.S04	MUSHROOM STYLE PUSHBUTTON SWITCH
2	407800.L20	INDICATOR LIGHTS
2	407800.P20	POTENTIOMETERS
AS REQ'D	407800.D10	DIN MOUNTING RAIL
AS REQ'D	407800.W21	NARROW SLOT WIRE DUCTS (NARROW SLOT)
48	407800.T10	LOW CURRENT TERMINAL BLOCKS
2	407800.T60	GROUNDING TERMINAL BLOCKS
2	407800.T15	TERMINAL STRIP IDENTIFCATION BLOCK
1	407800.G06	GROUND BARS

4 PDP-110-01 NAMEPLATE & PARTS LISTS
SCALE: NTS

NO.	DATE	BY	REVISION

NOTICE
0 ½ 1
IF THIS BAR DOES NOT MEASURE 1" THEN DRAWING IS NOT TO SCALE

MB DESIGNED
JL DRAWN
BP CHECKED

REGISTERED PROFESSIONAL ENGINEER 86683 OREGON MAY 08, 2012 BENJAMIN E. PERRY
Digitally Signed
EXPIRES: 12-31-2022

WEST YOST
Water. Engineered.

Landis Consulting
ENGINEERING SERVICES
6446 Fairway Ave. SE, Suite 220
Salem, OR 97306
503-584-1576
www.landisconsulting.com

Sweet Home Oregon at its best!

MAHLER WATER RECLAMATION FACILITY IMPROVEMENTS PROJECT PHASE 1

INFLUENT PUMP STATION
PDP-110-01 LCS

PROJECT NO.: 936-50-21-09 | SCALE: AS NOTED | DATE: AUGUST 2022

SHEET
E-902

DocuSign Envelope ID: 09934EE9-0C55-40A3-8631-9C0AF6797111

G:\PROJECTS\103 - West Yost Associates\1032109 - Sweet Home Wwtp Phase 1 Design\Design\(2) Drawings\Current\sweet Home Wwtp Phase 1 Design\Sheets\E-903 Influent Pump Station - Motor Schematic 2.dwg E-903 Influent Pump Station - Motor Schematic 2 7/28/2022 6:51 PM JLUTE 24.1s (LMS Tech)

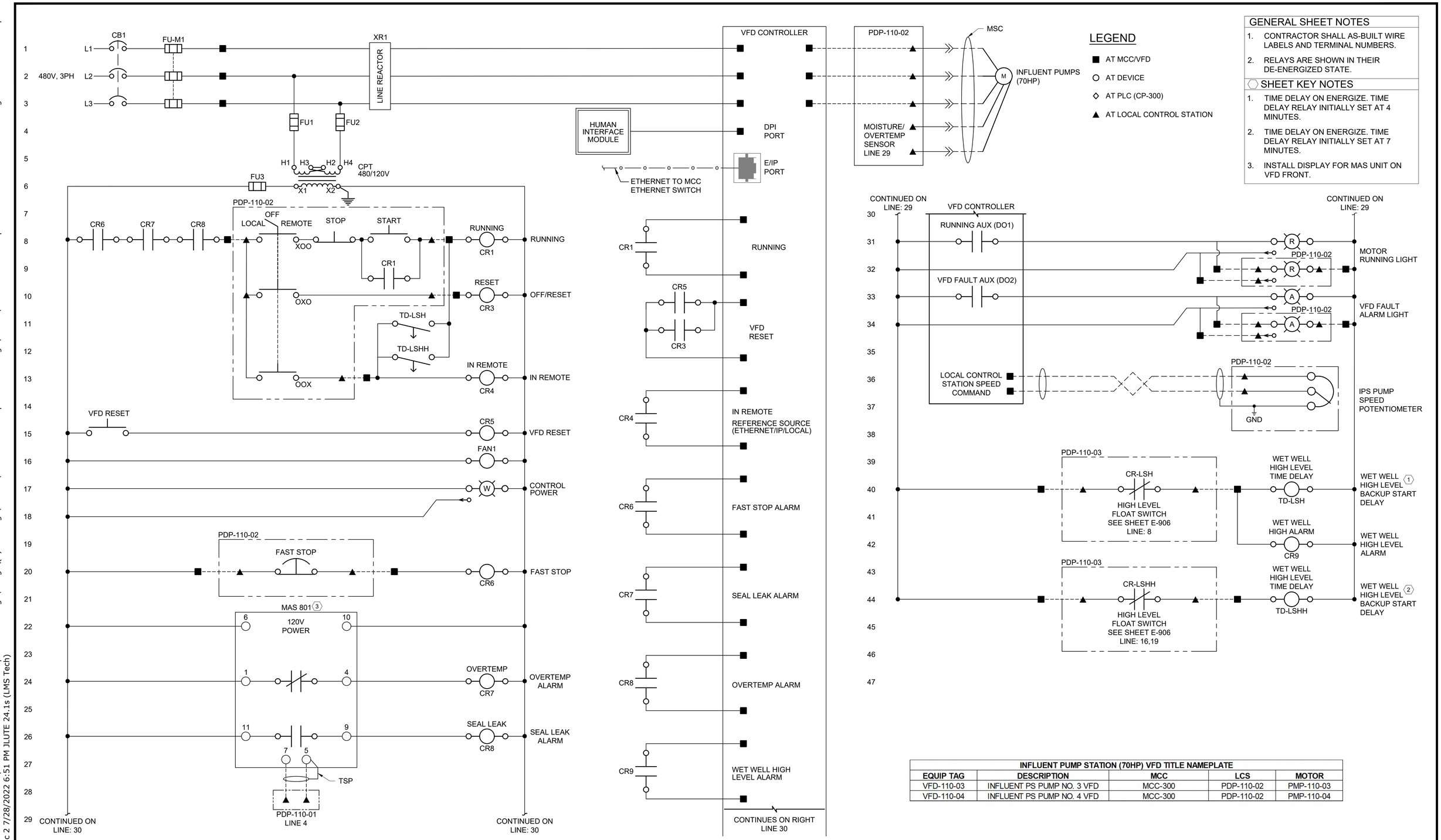

INFLUENT PUMP STATION (70HP) VFD TITLE NAMEPLATE

EQUIP TAG	DESCRIPTION	MCC	LCS	MOTOR
VFD-110-03	INFLUENT PS PUMP NO. 3 VFD	MCC-300	PDP-110-02	PMP-110-03
VFD-110-04	INFLUENT PS PUMP NO. 4 VFD	MCC-300	PDP-110-02	PMP-110-04

NO.	DATE	BY	REVISION

NOTICE
0 ½ 1
IF THIS BAR DOES NOT MEASURE 1" THEN DRAWING IS NOT TO SCALE

MB DESIGNED
JL DRAWN
BP CHECKED

REGISTERED PROFESSIONAL ENGINEER 86683 OREGON MAY 08, 2012 BENJAMIN E. PERRY
Digitally Signed
EXPIRES: 12-31-2022

WEST YOST
Water. Engineered.

Landis Consulting
ENGINEERING SERVICES
6446 Fairway Ave. SE, Suite 220
Salem, OR 97306
503-584-1576
www.landisconsulting.com

Sweet Home Oregon at its best!

MAHLER WATER RECLAMATION FACILITY IMPROVEMENTS PROJECT PHASE 1

INFLUENT PUMP STATION MOTOR SCHEMATIC 2

PROJECT NO.: 936-50-21-09 | SCALE: AS NOTED | DATE: AUGUST 2022

SHEET E-903

104 of 135

DocuSign Envelope ID: 09934EE9-0C55-40A3-8631-9C0AF6797111

G:\PROJECTS\103 - West Yost Associates\1032109 - Sweet Home Wwtp Phase 1 Design\Design\(2) Drawings\Current\sweet Home Wwtp Phase 1 Design\Sheets\E-904 Influent Pump Station - Motor Schematic 3.dwg E-904 Influent Pump Station - Motor Schematic 3 7/28/2022 6:51 PM JLUTE 24.1s (LMS Tech)

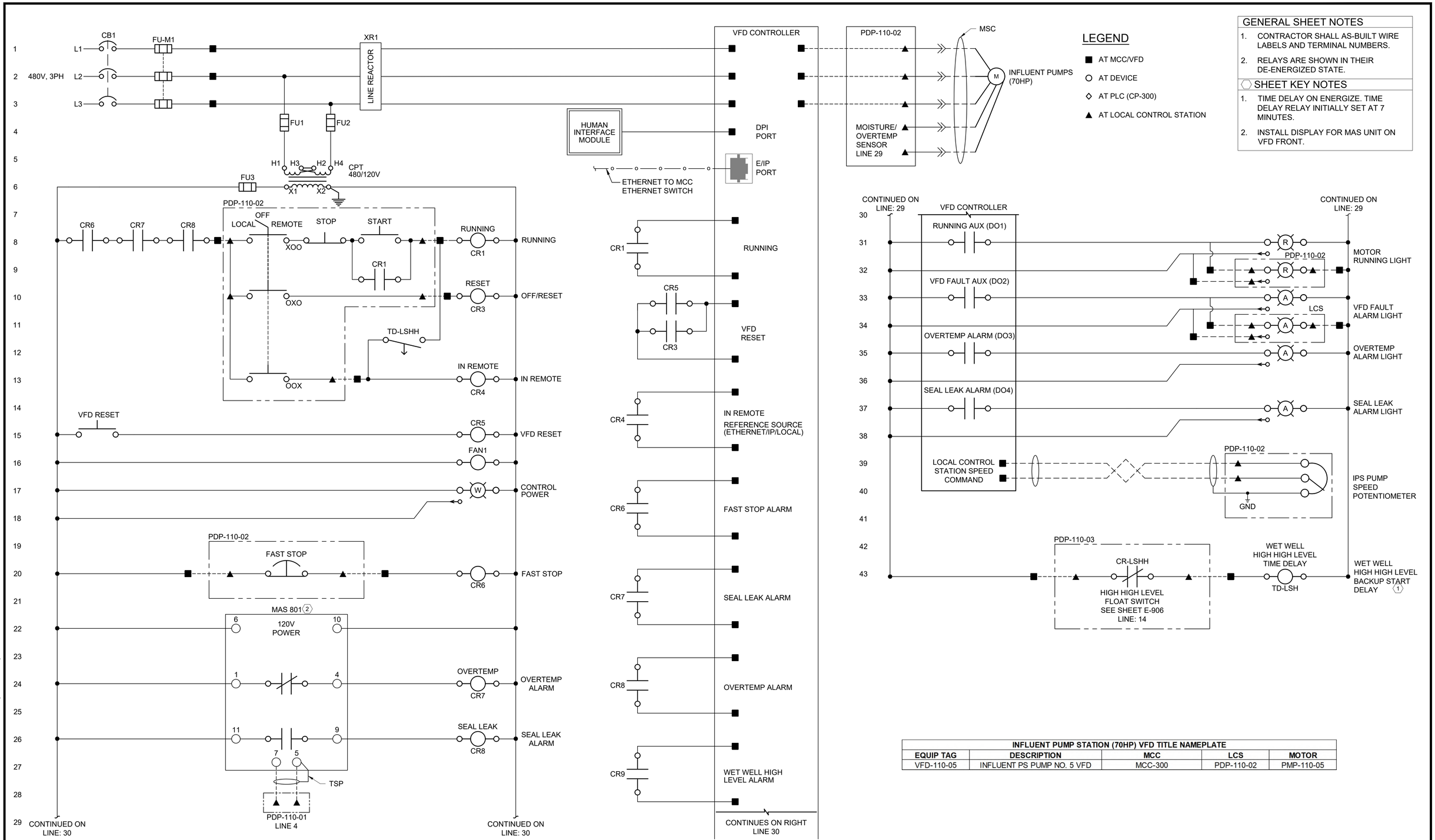

LEGEND

- ■ AT MCC/VFD
- ○ AT DEVICE
- ◇ AT PLC (CP-300)
- ▲ AT LOCAL CONTROL STATION

GENERAL SHEET NOTES

1. CONTRACTOR SHALL AS-BUILT WIRE LABELS AND TERMINAL NUMBERS.
2. RELAYS ARE SHOWN IN THEIR DE-ENERGIZED STATE.

SHEET KEY NOTES

1. TIME DELAY ON ENERGIZE. TIME DELAY RELAY INITIALLY SET AT 7 MINUTES.
2. INSTALL DISPLAY FOR MAS UNIT ON VFD FRONT.

INFLUENT PUMP STATION (70HP) VFD TITLE NAMEPLATE

EQUIP TAG	DESCRIPTION	MCC	LCS	MOTOR
VFD-110-05	INFLUENT PS PUMP NO. 5 VFD	MCC-300	PDP-110-02	PMP-110-05

NO.	DATE	BY	REVISION

NOTICE

0 ½ 1

IF THIS BAR DOES NOT MEASURE 1" THEN DRAWING IS NOT TO SCALE

MB DESIGNED
JL DRAWN
BP CHECKED

REGISTERED PROFESSIONAL ENGINEER 86683 OREGON MAY 08, 2012 BENJAMIN E. PERRY
Digitally Signed
EXPIRES: 12-31-2022

WEST YOST
Water. Engineered.

Landis Consulting
ENGINEERING SERVICES
6446 Fairway Ave. SE, Suite 220
Salem, OR 97306
503-584-1576
www.landisconsulting.com

Sweet Home Oregon at its best!

MAHLER WATER RECLAMATION FACILITY IMPROVEMENTS PROJECT PHASE 1

INFLUENT PUMP STATION MOTOR SCHEMATIC 3

PROJECT NO.: 936-50-21-09 | SCALE: AS NOTED | DATE: AUGUST 2022

SHEET E-904

105 of 135

DocuSign Envelope ID: 09934EE9-0C55-40A3-8631-9C0AF6797111

G:\PROJECTS\103 - West Yost Associates\1032109 - Sweet Home Wwtp Phase 1 Design\Design\(2) Drawings\Current\sweet Home Wwtp Phase 1 Design\Sheets\E-905 Influent Pump Station PDP-110-02 LCS.dwg E-905 Influent Pump Station
PDP-110-02 LCS 7/28/2022 6:52 PM JLUTE 24.1s (LMS Tech)

GENERAL SHEET NOTES

1. REFERENCE DRAWING E-112 FOR PDP STAND DETAILS FOR PDP-110-02.

SHEET KEY NOTES

1. SEE POWER AND CONTROL CONDUIT SCHEDULES FOR DETAILS ON CONDUITS / CABLES ENTERING AND EXITING THE PUMP DISCONNECT PANEL.
2. ALL PILOT DEVICES SHALL BE INSTALLED ON A MANUFACTURER SUPPLIED SWING-OUT DEADFRONT DOOR THE NAMEPLATE SHALL BE INSTALLED ON THE EXTERIOR DOOR OF THE ENCLOSURE.

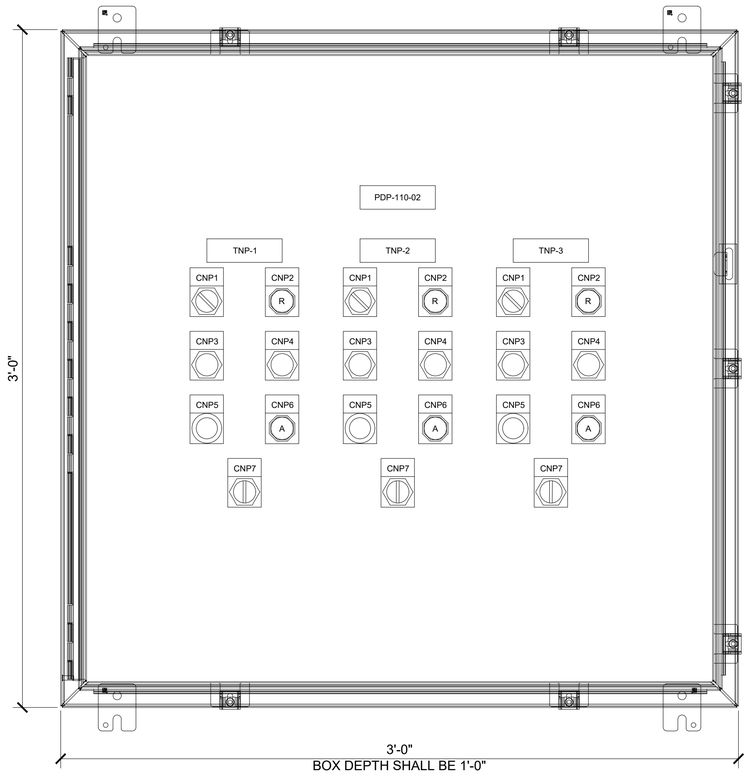

1 PDP-110-02 FRONT ELEVATION (2)
SCALE: NTS

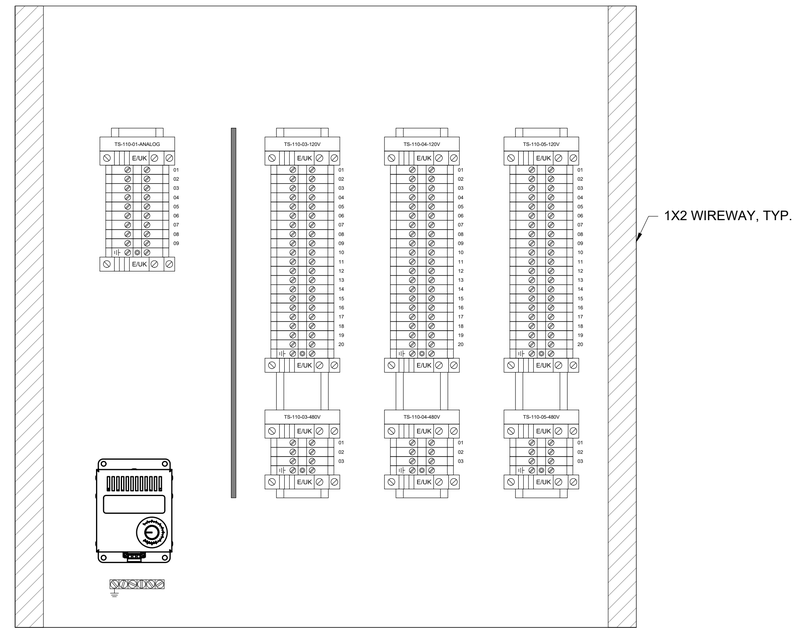

2 PDP-110-02 INTERIOR ELEVATION
SCALE: NTS

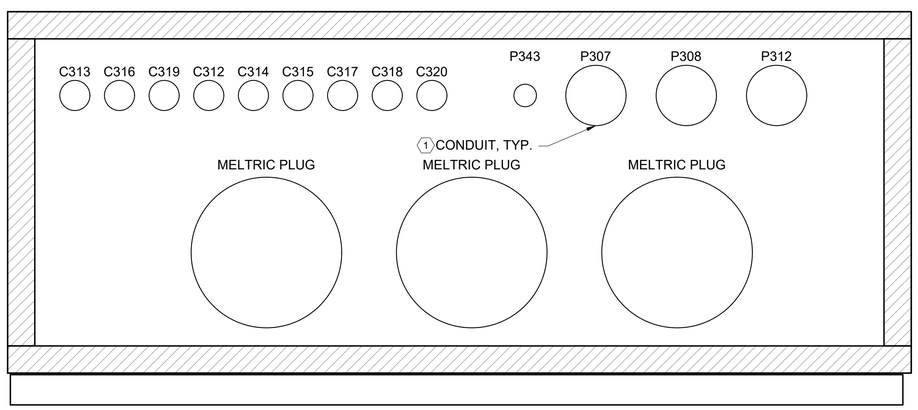

3 PENETRATION DRAWING VIEW
SCALE: NTS

INFLUENT PUMP STATION LCS TITLE NAMEPLATE		
TNP	EQUIPMENT TAG	DESCRIPTION
1	INFLUENT PUMP NO.3	INFLUENT PUMP NO.3 LCS
2	INFLUENT PUMP NO.4	INFLUENT PUMP NO.4 LCS
3	INFLUENT PUMP NO.5	INFLUENT PUMP NO.5 LCS

INFLUENT PUMP STATION LCS DEVICE TITLE NAMEPLATE	
CNP	INSCRIPTION
1	LOCAL / OFF / REMOTE (3-POS)
2	RUNNING INDICATOR LIGHT (RED)
3	START PUSHBUTTON
4	STOP PUSHBUTTON
5	FAST STOP
6	VFD FAULT ALARM (AMBER)
7	SPEED SETPOINT

INFLUENT PUMP STATION LOCAL CONTROL STATION PARTS LIST		
QUANTITY	REFERENCE KEYNOTE #	DESCRIPTION
1	407800.E01	STAINLESS STEEL, NEMA 4X ENCLOSURES
1	407800.H17	ENCLOSURE HEATER (100W)
3	407800.S01	SELECTOR SWITCHES
6	407800.S02	PUSHBUTTONS
3	407800.S04	MUSHROOM STYLE PUSHBUTTON SWITCH
6	407800.L20	INDICATOR LIGHTS
3	407800.P20	POTENTIOMETERS
AS REQ'D	407800.D10	DIN MOUNTING RAIL
AS REQ'D	407800.W21	NARROW SLOT WIRE DUCTS (NARROW SLOT)
48	407800.T10	LOW CURRENT TERMINAL BLOCKS
2	407800.T60	GROUNDING TERMINAL BLOCKS
2	407800.T15	TERMINAL STRIP IDENTIFCATION BLOCK
1	407800.G06	GROUND BARS

4 PDP-110-02 NAMEPLATE & PARTS LISTS
SCALE: NTS

NO.	DATE	BY	REVISION

NOTICE
0 ½ 1
IF THIS BAR DOES NOT MEASURE 1" THEN DRAWING IS NOT TO SCALE

MB DESIGNED
JL DRAWN
BP CHECKED

REGISTERED PROFESSIONAL ENGINEER 86683 OREGON BENJAMIN E. PERRY
Digitally Signed
MAY 08, 2012
EXPIRES: 12-31-2022

WEST YOST
Water. Engineered.

Landis Consulting
ENGINEERING SERVICES
6446 Fairway Ave. SE, Suite 220
Salem, OR 97306
503-584-1576
www.landisconsulting.com

Sweet Home Oregon at its best!

MAHLER WATER RECLAMATION FACILITY IMPROVEMENTS PROJECT PHASE 1

INFLUENT PUMP STATION
PDP-110-02 LCS

PROJECT NO.: 936-50-21-09 | SCALE: AS NOTED | DATE: AUGUST 2022

SHEET
E-905

DocuSign Envelope ID: 09934EE9-0C55-40A3-8631-9C0AF6797111

G:\PROJECTS\103 - West Yost Associates\10321 09 - Sweet Home Wwtp Phase 1 Design\Design\(2) Drawings\Current\sweet Home Wwtp Phase 1 Design\Sheets\E-906 Influent Pump Station PDP-110-03 LCS.dwg E-906 Influent Pump Station
PDP-110-03 LCS 7/28/2022 6:55 PM JLUTE 24.1s (LMS Tech)

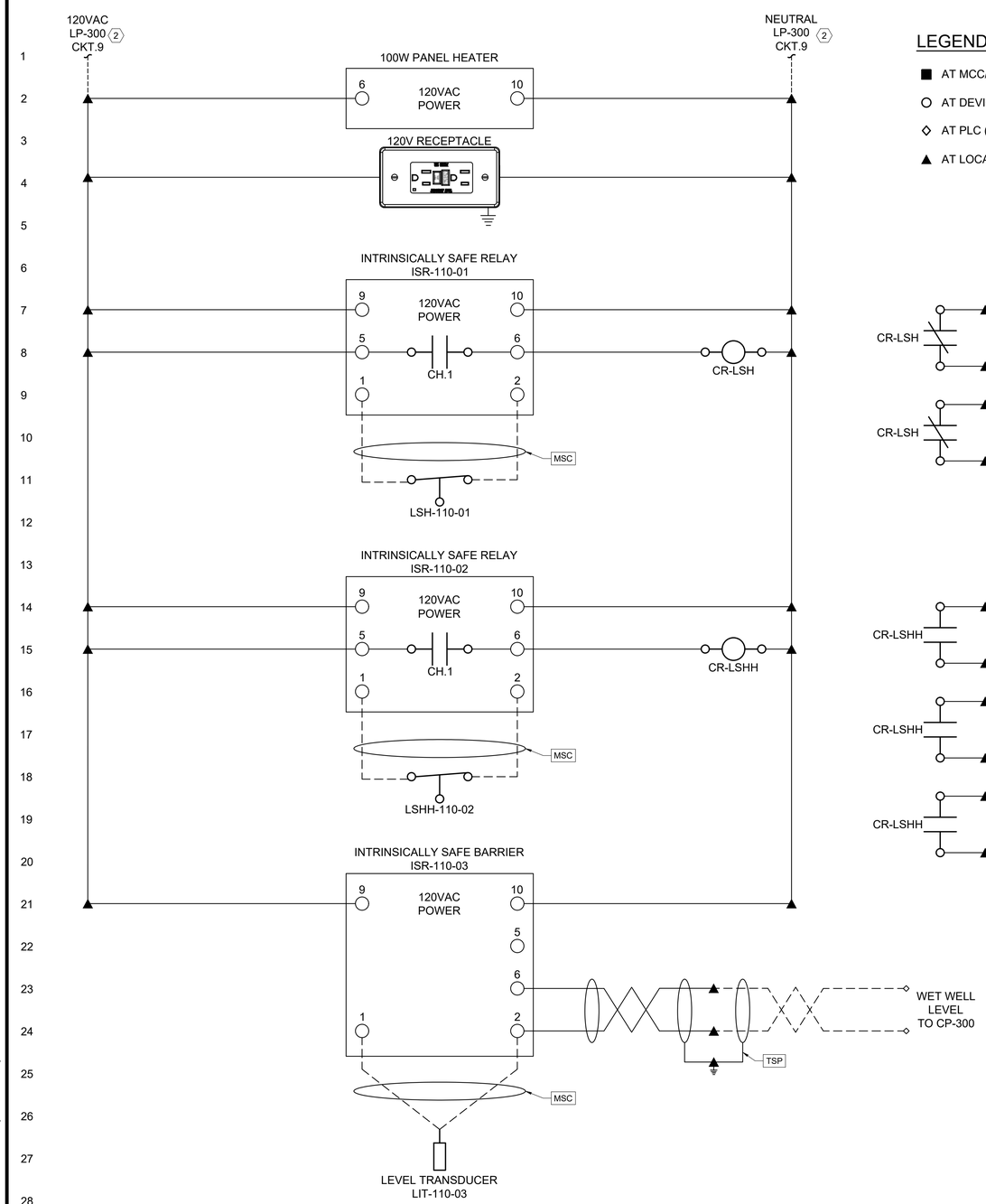

1 PDP-110-03 INTRINSICALLY SAFE RELAY / BARRIER WIRING
SCALE: NTS

LEGEND

- ■ AT MCC/VFD
- ○ AT DEVICE
- ◇ AT PLC (CP-300)
- ▲ AT LOCAL CONTROL STATION

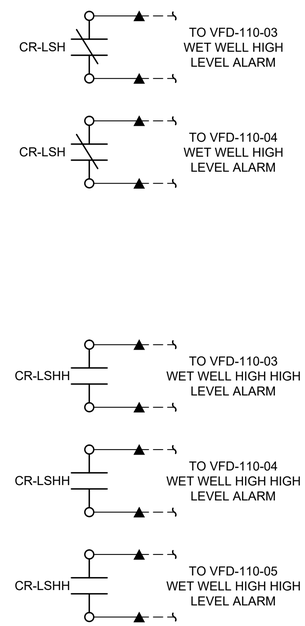

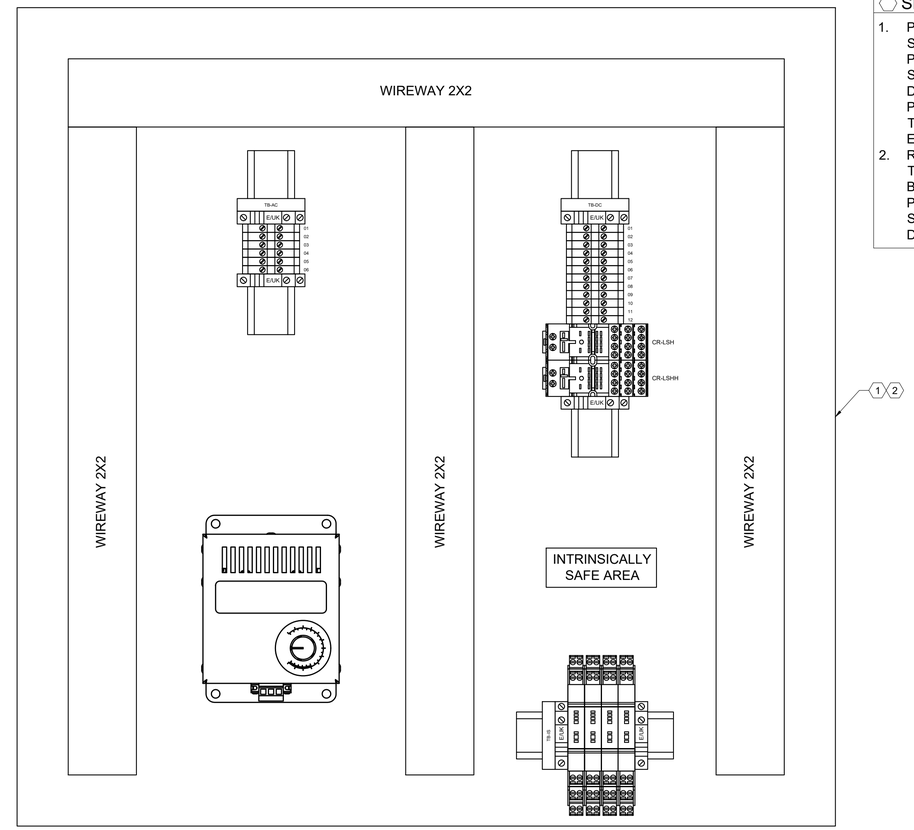

2 PDP-110-03 INTERIOR ELEVATION
SCALE: NTS

GENERAL SHEET NOTES

1. REFERENCE DRAWING E-112 FOR PDP STAND DETAILS FOR PDP-110-03.
2. IN PHASE 1, WIRE THIS PANEL TO PNL-L, CIRCUIT #21.

SHEET KEY NOTES

1. PROVIDE 24"W X 24"H X 12"D NEMA 4X STAINLESS STEEL ENCLOSURE. PROVIDE A MANUFACTURER SUPPLIED SWING-OUT DEADFRONT DOOR. THE NAMEPLATE OF PDP-110-03 SHALL BE INSTALLED ON THE EXTERIOR DOOR OF THE ENCLOSURE.
2. REFERENCE IC-340 FOR LEVEL TRANSMITTER DISPLAY THAT SHALL BE MOUNTED ON THE FRONT OF PDP-110-03. THE LEVEL TRANSMITTER SHALL BE INSTALLED ON THE DEADFRONT DOOR.

INFLUENT PUMP STATION LOCAL CONTROL STATION PARTS LIST

QUANTITY	REFERENCE KEYNOTE #	DESCRIPTION
1	407800.E01	STAINLESS STEEL, NEMA 4X ENCLOSURES
1	407800.H17	ENCLOSURE HEATER (100W)
2	407800.R90	INTRINSICALLY SAFE RELAY
1	407800.B90	INTRINSICALLY SAFE HART BARRIER
AS REQ'D	407800.D10	DIN MOUNTING RAIL
AS REQ'D	407800.W21	NARROW SLOT WIRE DUCTS (NARROW SLOT)
2	407800.R01	ICE CUBE RELAYS
48	407800.T10	LOW CURRENT TERMINAL BLOCKS
2	407800.T60	GROUNDING TERMINAL BLOCKS
2	407800.T15	TERMINAL STRIP IDENTIFCATION BLOCK
1	407800.G06	GROUND BARS
1	262726.R10	GROUND FAULT CIRCUIT INTERRUPTER RECEPTACLE

NO.	DATE	BY	REVISION

NOTICE
0 ½ 1
IF THIS BAR DOES NOT MEASURE 1" THEN DRAWING IS NOT TO SCALE

MB DESIGNED
JL DRAWN
BP CHECKED

REGISTERED PROFESSIONAL ENGINEER 86683 OREGON BENJAMIN E. PERRY
Digitally Signed
MAY 08, 2012
EXPIRES: 12-31-2022

WEST YOST
Water. Engineered.

Landis Consulting
ENGINEERING SERVICES
6446 Fairway Ave. SE, Suite 220
Salem, OR 97306
503-584-1576
www.landisconsulting.com

Sweet Home Oregon at its best!

MAHLER WATER RECLAMATION FACILITY IMPROVEMENTS PROJECT PHASE 1

INFLUENT PUMP STATION
PDP-110-03 LCS

PROJECT NO.: 936-50-21-09 | SCALE: AS NOTED | DATE: AUGUST 2022

SHEET
E-906

DocuSign Envelope ID: 09934EE9-0C55-40A3-8631-9C0AF6797111

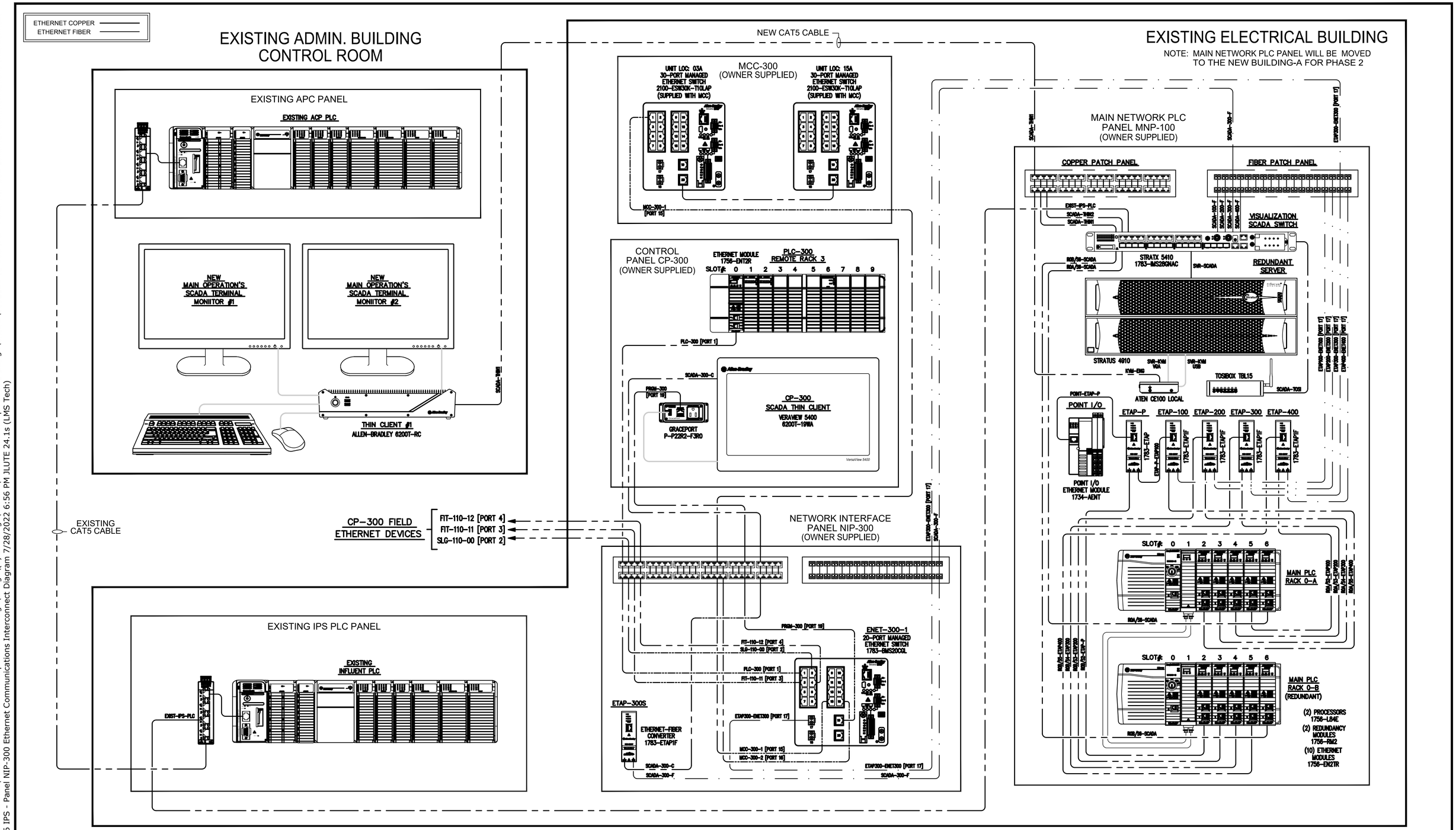

NO.	DATE	BY	REVISION

NOTICE

0 ½ 1

IF THIS BAR DOES NOT MEASURE 1" THEN DRAWING IS NOT TO SCALE

MB DESIGNED
JL DRAWN
BP CHECKED

REGISTERED PROFESSIONAL ENGINEER 86683 Digitally Signed OREGON MAY 08, 2012 BENJAMIN E. PERRY
EXPIRES: 12-31-2022

WEST YOST Water. Engineered.

Landis Consulting
ENGINEERING SERVICES
6446 Fairway Ave. SE, Suite 220
Salem, OR 97306
503-584-1576
www.landisconsulting.com

Sweet Home Oregon ...at its best!

MAHLER WATER RECLAMATION FACILITY IMPROVEMENTS PROJECT PHASE 1

IPS - PANEL NIP-300 ETHERNET COMMUNICATIONS INTERCONNECT DIAGRAM

PROJECT NO.: 936-50-21-09 | SCALE: AS NOTED | DATE: AUGUST 2022

SHEET IC-006

108 of 135

G:\PROJECTS\103 - West Yost Associates\1032109 - Sweet Home Wwtp Phase 1 Design\Design\(2) Drawings\Current\sweet Home Wwtp Phase 1 Design\Sheets\1032109-IC-006 IPS - Panel NIP-300 Ethernet Communications Interconnect Diagram.dwg 1032109-IC-006 IPS - Panel NIP-300 Ethernet Communications Interconnect Diagram 7/28/2022 6:56 PM JLUTE 24.1s (LMS Tech)

DocuSign Envelope ID: 09934EE9-0C55-40A3-8631-9C0AF6797111

G:\PROJECTS\103 - West Yost Associates\1032109 - Sweet Home Wwtp Phase 1 Design\Design\(2) Drawings\Current\sweet Home Wwtp Phase 1 Design\Sheets\1032109-IC-010 MNP-100 Main PLC OT Network Panel Layout - Front & Read View.dwg 1032109-IC-010 MNP-100 Main PLC OT Network Panel Layout - Front & Read View 7/28/2022 6:20 PM JLUTE 24.1s (LMS Tech)

GENERAL SHEET NOTES

1. MNP-100 SHALL BE OWNER FURNISHED CONTRACTOR INSTALLED.

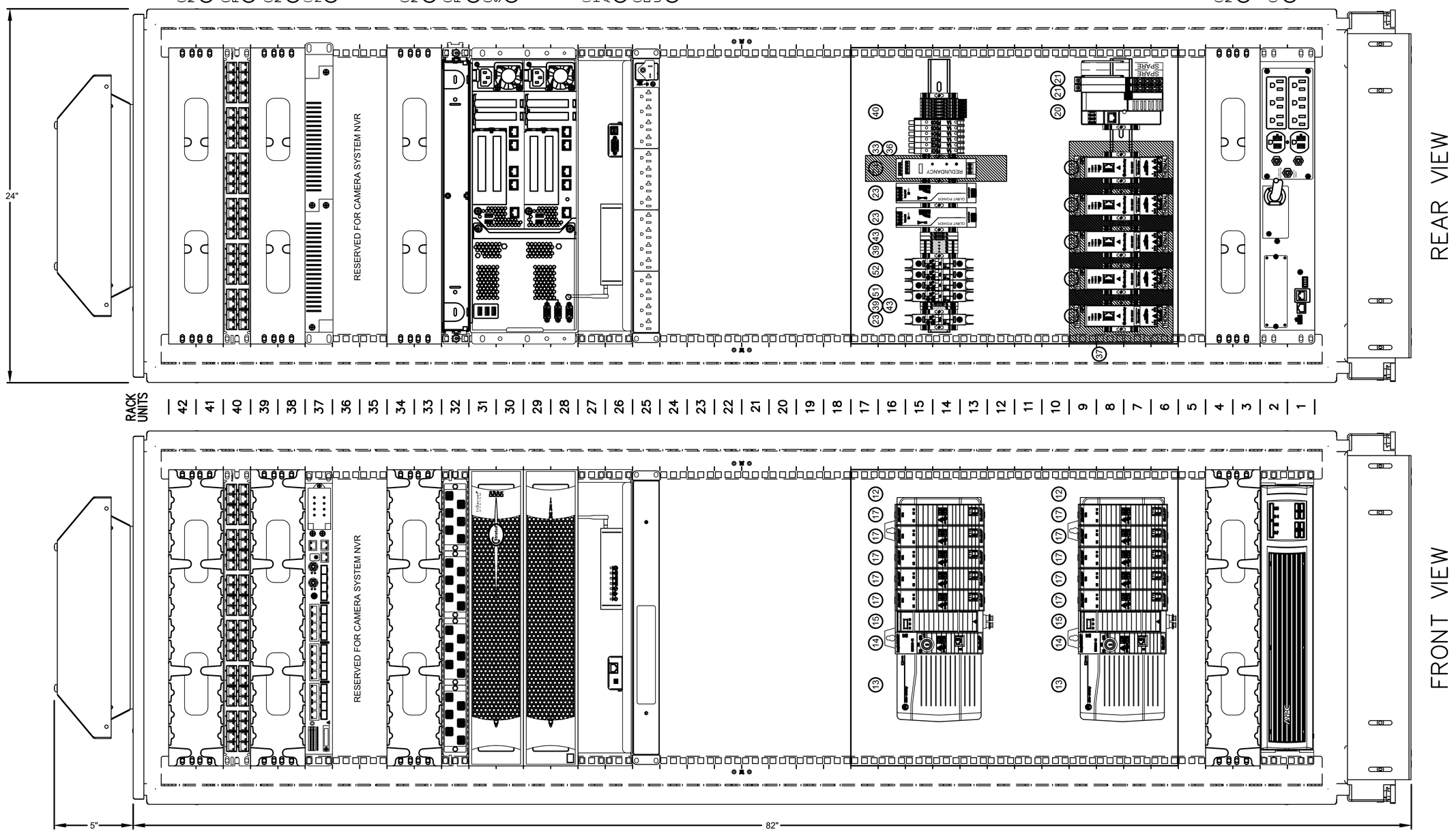

NO.	DATE	BY	REVISION

NOTICE

0 ½ 1

IF THIS BAR DOES NOT MEASURE 1" THEN DRAWING IS NOT TO SCALE

MB DESIGNED
JL DRAWN
BP CHECKED

REGISTERED PROFESSIONAL ENGINEER 86683 OREGON MAY 08, 2012 BENJAMIN E. PERRY
Digitally Signed
EXPIRES: 12-31-2022

WEST YOST
Water. Engineered.

Landis Consulting
ENGINEERING SERVICES
6446 Fairway Ave. SE, Suite 220
Salem, OR 97306
503-584-1576
www.landisconsulting.com

Sweet Home Oregon at its best!

MAHLER WATER RECLAMATION FACILITY IMPROVEMENTS PROJECT PHASE 1

MNP-100
MAIN PLC / OT NETWORK PANEL LAYOUT - FRONT & REAR VIEW

PROJECT NO.: 936-50-21-09 | SCALE: AS NOTED | DATE: AUGUST 2022

SHEET
IC-010

DocuSign Envelope ID: 09934EE9-0C55-40A3-8631-9C0AF6797111

G:\PROJECTS\103 - West Yost Associates\1032109 - Sweet Home Wwtp Phase 1 Design\Design\(2) Drawings\Current\sweet Home Wwtp Phase 1 Design\Sheets\1032109-IC-011 MNP-100 Main PLC OT Network Panel Layout - Side View.dwg
1032109-IC-011 MNP-100 Main PLC OT Network Panel Layout - Side View 7/28/2022 6:18 PM JLUTE 24.1s (LMS Tech)

GENERAL SHEET NOTES

1. MNP-100 SHALL BE OWNER FURNISHED CONTRACTOR INSTALLED.

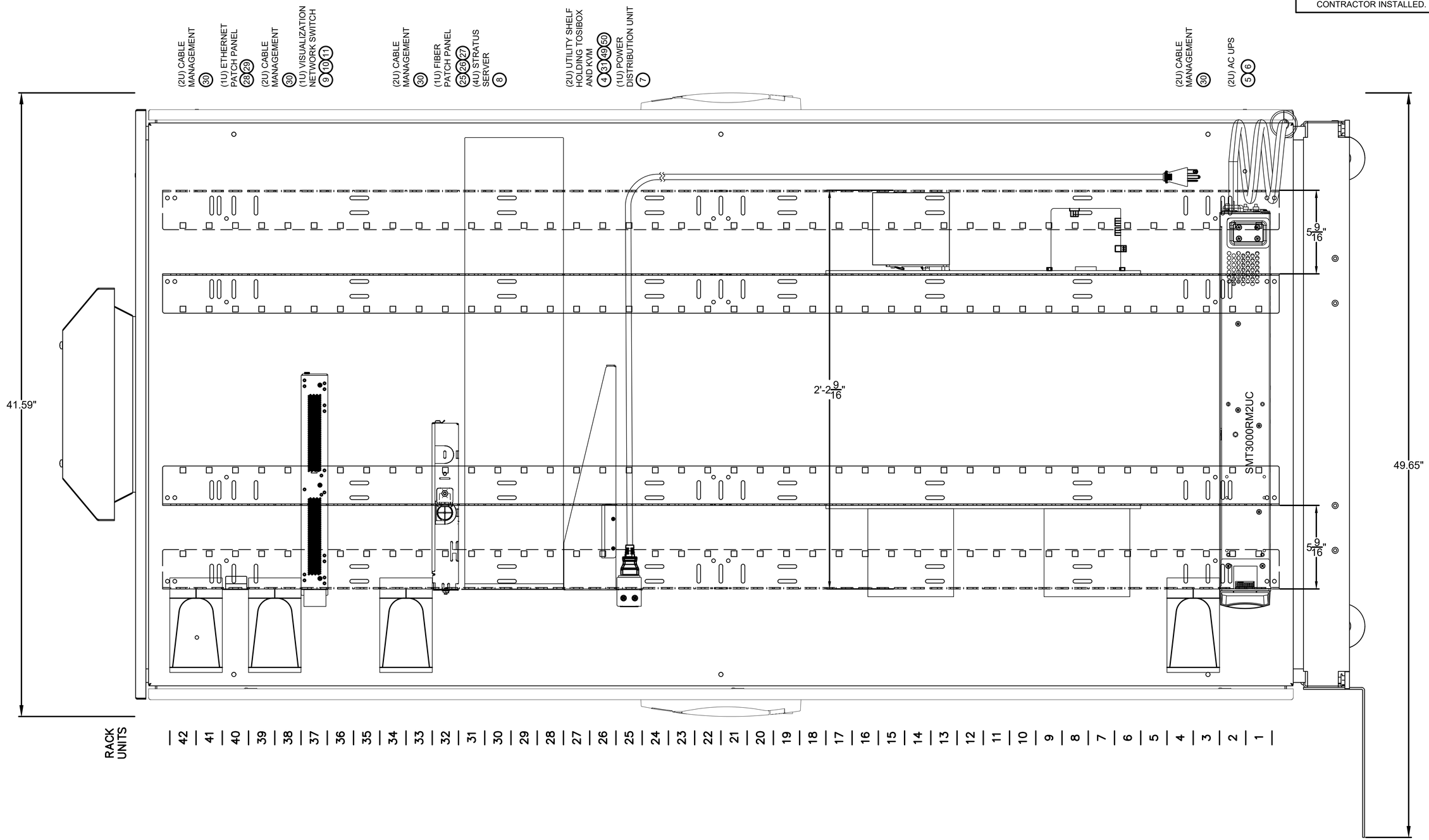

NO.	DATE	BY	REVISION

NOTICE

0 ½ 1

IF THIS BAR DOES NOT MEASURE 1" THEN DRAWING IS NOT TO SCALE

MB
DESIGNED
JL
DRAWN
BP
CHECKED

REGISTERED PROFESSIONAL ENGINEER
86683
Digitally Signed
OREGON
MAY 08, 2012
BENJAMIN E. PERRY
EXPIRES: 12-31-2022

WEST YOST
Water. Engineered.

Landis Consulting
ENGINEERING SERVICES
6446 Fairway Ave. SE, Suite 220
Salem, OR 97306
503-584-1576
www.landisconsulting.com

Sweet Home
Oregon at its best!

MAHLER WATER RECLAMATION FACILITY IMPROVEMENTS PROJECT PHASE 1

MNP-100
MAIN PLC / OT NETWORK PANEL LAYOUT - SIDE VIEW

PROJECT NO.: 936-50-21-09 | SCALE: AS NOTED | DATE: AUGUST 2022

SHEET
IC-011
110 of 135

DocuSign Envelope ID: 09934EE9-0C55-40A3-8631-9C0AF6797111

G:\PROJECTS\103 - West Yost Associates\1032109 - Sweet Home Wwtp Phase 1 Design\Design\(2) Drawings\Current\sweet Home Wwtp Phase 1 Design\Sheets\1032109-IC-012 MNP-100 Main PLC OT Network Panel Bill Of Material.dwg
1032109-IC-012 MNP-100 Main PLC OT Network Panel Bill of Material 7/28/2022 6:18 PM JLUTE 24.1s (LMS Tech)

BILL OF MATERIAL

ITEM	QTY	PART #	MANUFACTURER	DESCRIPTION
1	1	PSC20610BFP	HOFFMAN	ENCLOSURE, PROLINE V/D, SERVER CABINET FAN/FILTER TYPE 1, 2000X600X1000MM
2	1	PRA1920THL1	HOFFMAN	RACK ANGLES, COLOC, THOLE (2), BULLETIN DPC, SIZE/DIMS: 42 UNIT, FULL HT
3	2			**[[12U panel]] - CUSTOM ORDER**
4	1	RASU190315BK1	HAMMOND MFG.	UTILITY SHELF, 2U, 15" DEPTH, 14 GAUGE STEEL NON-VENTED, 100LB CAPACITY
5	1	SMT3000RM2UC	APC	SMART-UPS, 300VA, RACK MOUNT, 8 OUTLET, SMARTCONNECT
6	1	AP9613	APC	RELAY CARD
7	1	P12B19M	PANDUIT	PDU, 12x 5-20R outlets, 15A 5-15P inlet
8	2	4910 FT	STRATUS	STRATUS SERVER (REDUNDANT)
9	1	1783-IMS28GNAC	ALLEN BRADLEY	STRATIX 5410, DISTRIBUTION SWITCH
10	4	1783-SFP1GSX	ALLEN BRADLEY	FIBER SFPs 1Gig
11	1	1783-IMXAC	ALLEN BRADLEY	POWER SUPPLY MODULE - STRATIX 5410
12	2	1758-A7	ALLEN BRADLEY	7-SLOT CHASSISS
13	2	1756-PA72	ALLEN BRADLEY	75W, 120VAC, POWER SUPPLY
14	2	1756-L84E	ALLEN BRADLEY	CONTROLLOGIX CPU, 20MBYTES MEMORY
15	2	1756-RM2	ALLEN BRADLEY	REDUNDANCY MODULE
16	1	1756-RMC1	ALLEN BRADLEY	REDUNDANCY MODULE FIBER JUMPER - 1M
17	10	1756-EN2TR	ALLEN BRADLEY	ETHERNET REDUNDANT BRIDGE MODULE
18				
19	4	1783-ETAP1F	ALLEN BRADLEY	FIBER TO COPPER CONVERTER
20	1	1734-AENT	ALLEN BRADLEY	POINT IO MODULE
21	2	1734-IB4	ALLEN BRADLEY	POINT IO DIGITAL INPUT MODULE
22	2	1734-TOP	ALLEN BRADLEY	POINT IO TERMINAL BASE WITH SCREW CLAMP, 8 TERMINATIONS
23	2	2904600	PHOENIX CONTACT	QUINT POWER SUPPLY, 24VDC, 5A
24	1	2320173	PHOENIX CONTACT	REDUNDANCY MODULE WITH PROTECTIVE COATING, 24VDC
25	1	FMT1	PANDUIT	OPTICOM RACK MOUNT FIBER TRAY
26	1	CFAPPBL1	PANDUIT	OPTICOM RACK MOUNT FIBER ADAPTER PATCH PANELS, FITS 4 FAP'S OR CASSETTES
27	4	FAP6WAQDLCZ	PANDUIT	LC FIBER ADAPTER PANEL, 6 PORT, DUPLEX, MULTIMODE, OM3/OM4
28	1	CP48HDBL	PANDUIT	PATCH PANEL, MINI-COM, HIGH DENSITY, SHIELDED, 48-PORT, FLAT, 1 RU, STAINLESS STEEL
29	48	CJS688TGY	PANDUIT	MINI-COM, CAT6, SHIELDED RJ45, JACK MODULE
30	3	NMF2	PANDUIT	CABLE MANAGER, HORIZONTAL, FRONT ONLY, HIGH CAPACITY, 3.5"H x 19"W x 6.2"D, 2 RU
31	1	CE100L	ATEN	MINI USB KVM EXTENDER, TRANSMITTER
32	1	1489-M1C150	ALLEN BRADLEY	CIRCUIT BREAKER, 15 AMP, 277VAC/48VDC, C-TRIP CURVE, 1-POLE DIN MOUNT
33	6	1492-H5	ALLEN BRADLEY	FUSE HOLDER
34	1	1492-N37	ALLEN BRADLEY	END BARRIER
35				
36	6	ABC-1-R	BUSSMANN	FUSE, 1A, 1/4"x1-1/4", VDC
37	1	199-DR1	ALLEN BRADLEY	DIN RAIL
38	9	1492-EAJ35	ALLEN BRADLEY	END ANCHOR
39	5	1492-J3	ALLEN BRADLEY	TERMINAL STRIP
40	6	1492-J3-B	ALLEN BRADLEY	TERMINAL STRIP, BLUE
41	2		ALLEN BRADLEY	JUMPER, 10P (CUT-ABLE)
42	3	1492-EBJ3	ALLEN BRADLEY	END BARRIER
43	3	1492-JG4	ALLEN BRADLEY	GROUND TERMINAL BLOCK
44	2	17517-10-B1	VOLEX	CORDSET, 5-15P TO STRIPPED LEADS, SJT 14 AWG 3C, RATED 15A/125V, 9'-10"
45		FX2ERLNLNSNM001	PANDUIT	FIBER OPTIC PATCH CORDS
46		STP6X0.5MIG	PANDUIT	COPPER 10GIG PATCH CORDS
47		CMBBL-X	PANDUIT	MINI-COM BLANK MODULE, 1-POS
48	4	PVCM207	HOFFMAN	VERTICAL CABLE MANAGER, BLACK STEEL, NARROW PROFILE FOR 600mm ENCLOSURES
49	1	TBL15	TOSIBOX	LOCK 150, INDUSTRIAL FIREWALL ROUTER, SECURE REMOTE CONNECTIVITY
50	1	TBK2	TOSIBOX	CRYPTOPROCESSING DEVICE KEY
51	2	1489-M1C010	ALLEN BRADLEY	CIRCUIT BREAKER, 1 AMP, 277VAC/48VDC, C-TRIP CURVE, 1-POLE DIN MOUNT
52	2	1489-M1C060	ALLEN BRADLEY	CIRCUIT BREAKER, 6 AMP, 277VAC/48VDC, C-TRIP CURVE, 1-POLE DIN MOUNT
53	1	1783-ETAP	ALLEN BRADLEY	ETHERNET/IP TAP 3 COPPER PORTS
54	1	RGS134B-1	PANDUIT	GROUNDING KIT

GENERAL SHEET NOTES

1. MNP-100 SHALL BE OWNER FURNISHED CONTRACTOR INSTALLED.

NO.	DATE	BY	REVISION

NOTICE
0 ½ 1
IF THIS BAR DOES NOT MEASURE 1" THEN DRAWING IS NOT TO SCALE

MB DESIGNED
JL DRAWN
BP CHECKED

REGISTERED PROFESSIONAL ENGINEER 86683 OREGON BENJAMIN E. PERRY
Digitally Signed
MAY 08, 2012
EXPIRES: 12-31-2022

WEST YOST
Water. Engineered.

Landis Consulting
ENGINEERING SERVICES
6446 Fairway Ave. SE, Suite 220
Salem, OR 97306
503-584-1576
www.landisconsulting.com

Sweet Home Oregon at its best!

MAHLER WATER RECLAMATION FACILITY IMPROVEMENTS PROJECT PHASE 1

MNP-100
MAIN PLC / OT NETWORK PANEL
BILL OF MATERIAL

PROJECT NO.: 936-50-21-09 | SCALE: AS NOTED | DATE: AUGUST 2022

SHEET
IC-012
111 of 135

DocuSign Envelope ID: 09934EE9-0C55-40A3-8631-9C0AF6797111

G:\PROJECTS\103 - West Yost Associates\1032109 - Sweet Home Wwtp Phase 1 Design\Design\(2) Drawings\Current\sweet Home Wwtp Phase 1 Design\Sheets\1032109-IC-013 MNP-100 Main PLC OT Network Panel Power Distribution Schematic.dwg 1032109-IC-013 MNP-100 Main PLC OT Network Panel Power Distribution Schematic 7/28/2022 6:17 PM JLUTE 24.1s (LMS Tech)

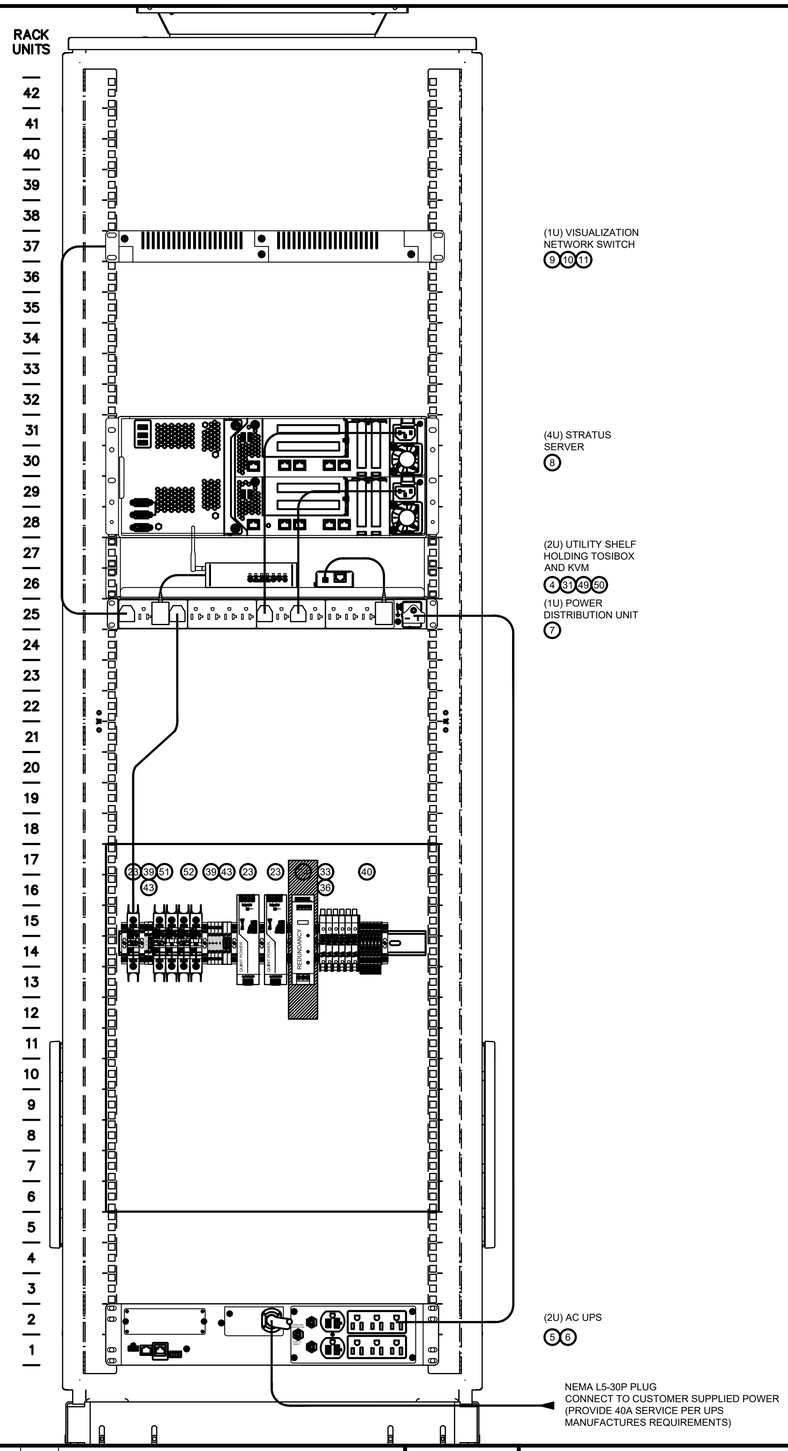

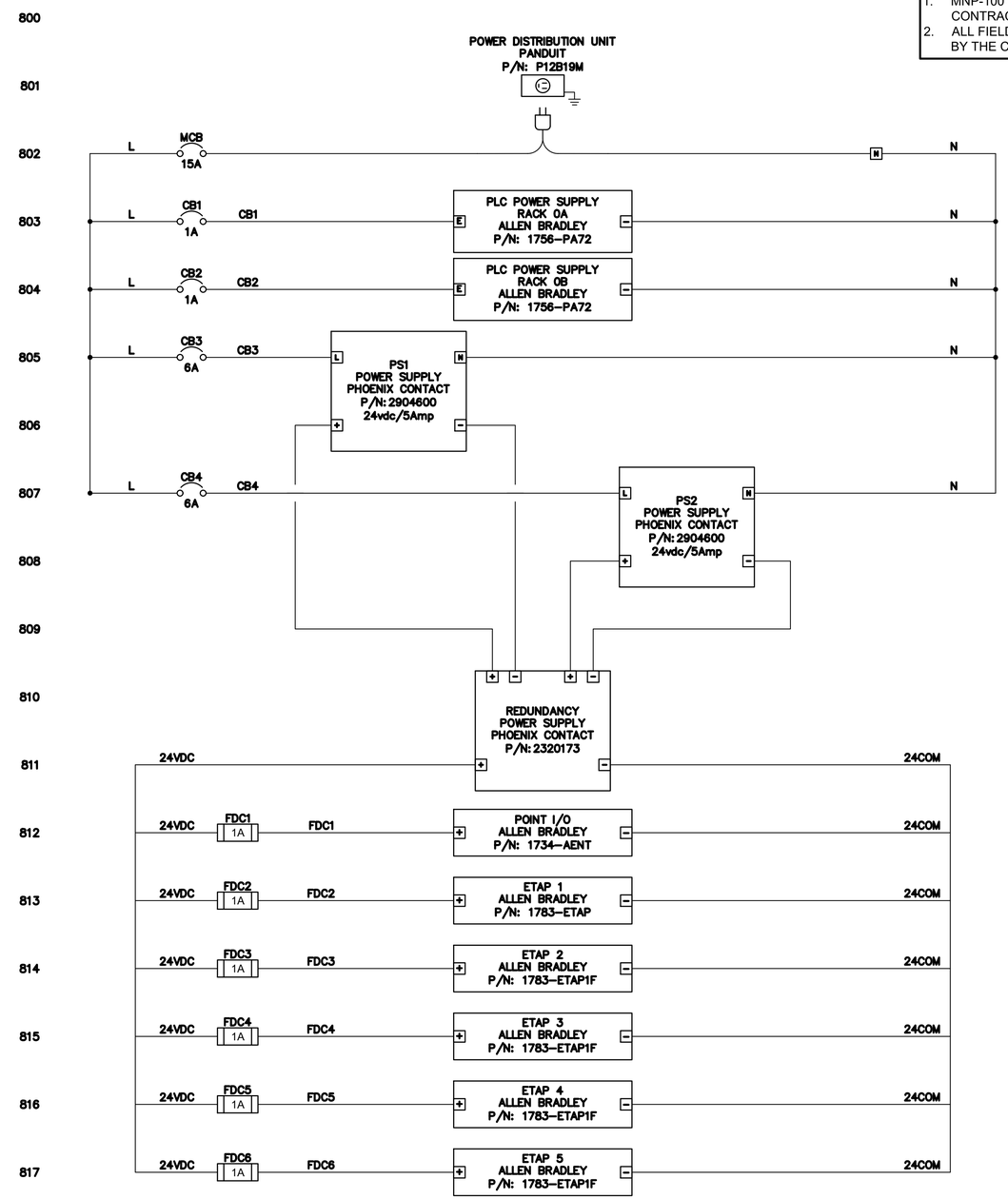

GENERAL SHEET NOTES

1. MNP-100 SHALL BE OWNER FURNISHED CONTRACTOR INSTALLED.
2. ALL FIELD WIRING SHALL BE PROVIDED BY THE CONTRACTOR.

NO.	DATE	BY	REVISION

NOTICE
0 ½ 1
IF THIS BAR DOES NOT MEASURE 1" THEN DRAWING IS NOT TO SCALE

MB
DESIGNED
JL
DRAWN
BP
CHECKED

REGISTERED PROFESSIONAL ENGINEER 86683 OREGON BENJAMIN E. PERRY
Digitally Signed
MAY 08, 2012
EXPIRES: 12-31-2022

WEST YOST
Water. Engineered.

Landis Consulting
ENGINEERING SERVICES
6446 Fairway Ave. SE, Suite 220
Salem, OR 97306
503-584-1576
www.landisconsulting.com

Sweet Home Oregon at its best!

MAHLER WATER
RECLAMATION FACILITY
IMPROVEMENTS PROJECT
PHASE 1

MNP-100
MAIN PLC / OT NETWORK PANEL
POWER DISTRIBUTION SCHEMATIC

PROJECT NO.: 936-50-21-09 | SCALE: AS NOTED | DATE: AUGUST 2022

SHEET
IC-013
112 of 135

DocuSign Envelope ID: 09934EE9-0C55-40A3-8631-9C0AF6797111

G:\PROJECTS\103 - West Yost Associates\1032109 - Sweet Home Wwtp Phase 1 Design\Design\(2) Drawings\Current\sweet Home Wwtp Phase 1 Design\Sheets\1032109-IC-014 MNP-100 Main PLC OT Network Panel IO Slot 1 Input Module.dwg 1032109-IC-014 MNP-100 Main PLC OT Network Panel IO Slot 1 Input Module 7/28/2022 6:17 PM JLUTE 24.1s (LMS Tech)

GENERAL SHEET NOTES

1. MNP-100 SHALL BE OWNER FURNISHED CONTRACTOR INSTALLED.
2. ALL FIELD WIRING SHALL BE PROVIDED BY THE CONTRACTOR.

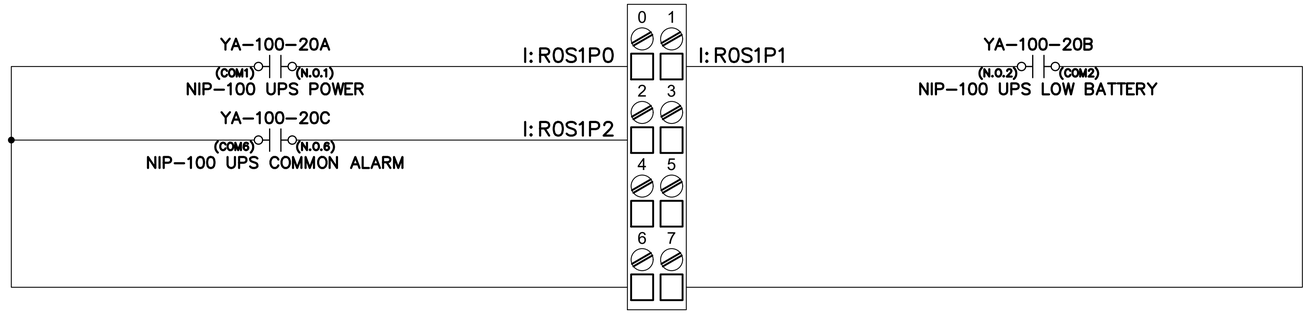

SLOT 1

POINT I/O
4 POINT SINK INPUT MODULE
AB 1734-IB4

NO.	DATE	BY	REVISION

NOTICE
0 ½ 1
IF THIS BAR DOES NOT MEASURE 1" THEN DRAWING IS NOT TO SCALE

MB DESIGNED
JL DRAWN
BP CHECKED

REGISTERED PROFESSIONAL ENGINEER 86683 Digitally Signed OREGON MAY 08, 2012 BENJAMIN E. PERRY
EXPIRES: 12-31-2022

WEST YOST Water. Engineered.

Landis Consulting
ENGINEERING SERVICES
6446 Fairway Ave. SE, Suite 220
Salem, OR 97306
503-584-1576
www.landisconsulting.com

Sweet Home Oregon at its best!

MAHLER WATER RECLAMATION FACILITY IMPROVEMENTS PROJECT PHASE 1

MNP-100
MAIN PLC / OT NETWORK PANEL
POINT I/O SLOT 1 INPUT MODULE

PROJECT NO.: 936-50-21-09 | SCALE: AS NOTED | DATE: AUGUST 2022

SHEET
IC-014
113 of 135

DocuSign Envelope ID: 09934EE9-0C55-40A3-8631-9C0AF6797111

G:\PROJECTS\103 - West Yost Associates\1032109 - Sweet Home Wwtp Phase 1 Design\Design\(2) Drawings\Current\sweet Home Wwtp Phase 1 Design\Sheets\1032109-IC-015 MNP-100 Main PLC OT Network Panel Point IO Slot 2 Input Module.dwg 1032109-IC-015 MNP-100 Main PLC OT Network Panel Point IO Slot 2 Input Module 7/28/2022 6:17 PM 1LUTE 24.1s (LMS Tech)

GENERAL SHEET NOTES

1. MNP-100 SHALL BE OWNER FURNISHED CONTRACTOR INSTALLED.
2. ALL FIELD WIRING SHALL BE PROVIDED BY THE CONTRACTOR.

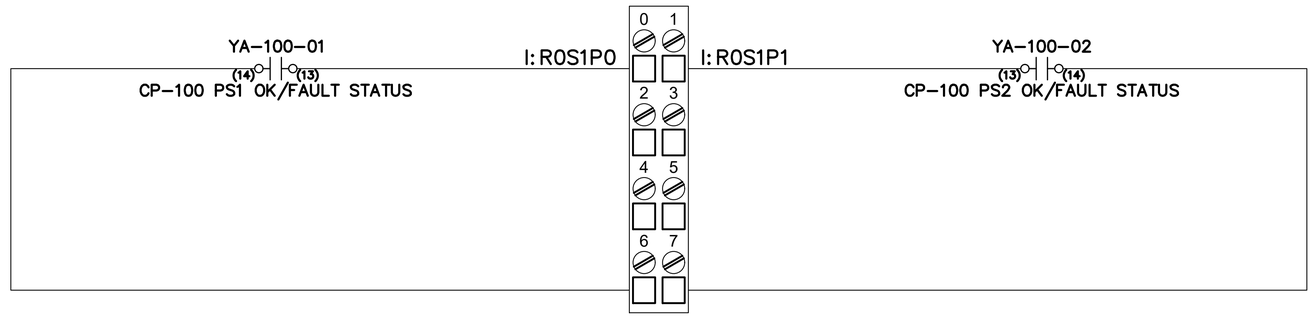

SLOT 2

POINT I/O
4 POINT SINK INPUT MODULE
AB 1734-IB4

NO.	DATE	BY	REVISION
△			
△			
△			
△			
△			
△			
△			

NOTICE
0 ½ 1
IF THIS BAR DOES NOT MEASURE 1" THEN DRAWING IS NOT TO SCALE

MB DESIGNED
JL DRAWN
BP CHECKED

REGISTERED PROFESSIONAL ENGINEER 86683 Digitally Signed OREGON MAY 08, 2012 BENJAMIN E. PERRY
EXPIRES: 12-31-2022

WEST YOST
Water. Engineered.

Landis Consulting
ENGINEERING SERVICES
6446 Fairway Ave. SE, Suite 220
Salem, OR 97306
503-584-1576
www.landisconsulting.com

Sweet Home Oregon at its best!

MAHLER WATER RECLAMATION FACILITY IMPROVEMENTS PROJECT PHASE 1

MNP-100
MAIN PLC / OT NETWORK PANEL
POINT I/O SLOT 2 INPUT MODULE

PROJECT NO.: 936-50-21-09 | SCALE: AS NOTED | DATE: AUGUST 2022

SHEET
IC-015
114 of 135

DocuSign Envelope ID: 09934EE9-0C55-40A3-8631-9C0AF6797111

G:\PROJECTS\103 - West Yost Associates\1032109 - Sweet Home Wwtp Phase 1 Design\Design\(2) Drawings\Current\sweet Home Wwtp Phase 1 Design\Sheets\1032109-IC-022 NIP-300 Network Interface Panel Layout (For CP-300).dwg
1032109-IC-022 NIP-300 Network Interface Panel Layout (For CP-300) 7/28/2022 6:16 PM JLUTE 24.1s (LMS Tech)

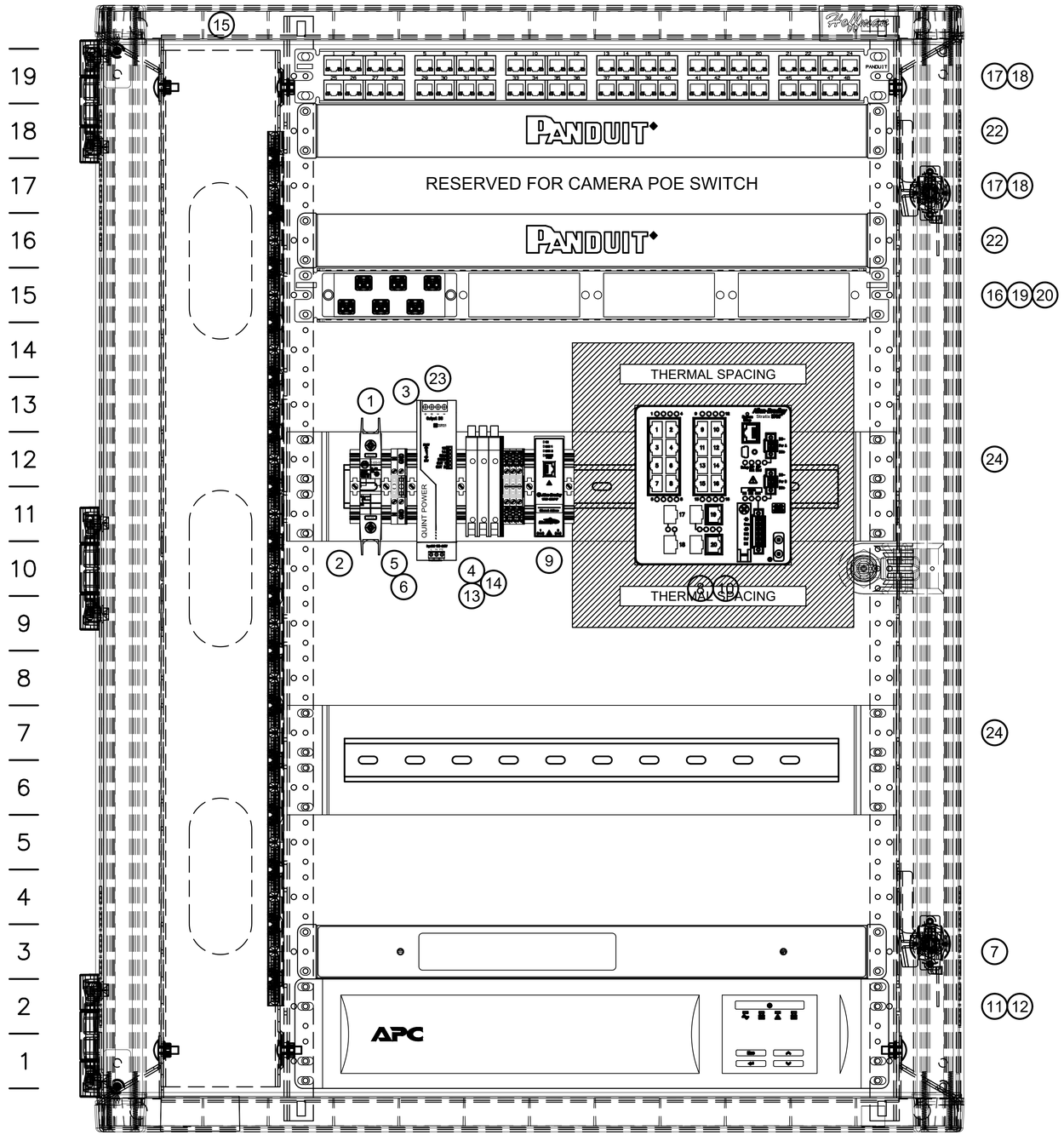

1. NIP-300 SHALL BE OWNER FURNISHED CONTRACTOR INSTALLED.
2. ALL FIELD WIRING SHALL BE PROVIDED BY THE CONTRACTOR.

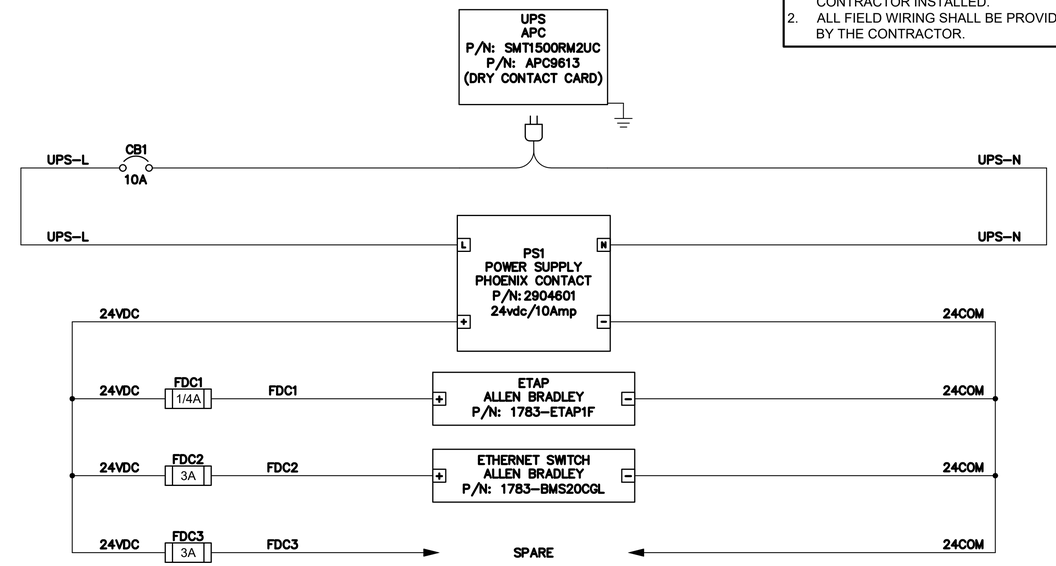

BILL OF MATERIAL

ITEM	QTY	PART #	MANUFACTURER	DESCRIPTION
1	1	1489-M1C100	ALLEN BRADLEY	CIRCUIT BREAKER, 10 AMP, 277VAC/48VDC, C-TRIP CURVE, 1-POLE DIN MOUNT
2	8	1492-EAJ35	ALLEN BRADLEY	END ANCHOR
3	2	1492-EBJ3	ALLEN BRADLEY	END BARRIER, 1492-J SERIES
4	3	1492-H5	ALLEN BRADLEY	FUSE HOLDER, 10-57V AC/DC, RED LED, 1/4 X 1-1/4
5	4	1492-J3	ALLEN BRADLEY	TERMINAL BLOCK , GRAY, 0.20"
6	1	1492-JG3	ALLEN BRADLEY	TERMINAL BLOCK , GREEN/YELLOW, GROUND
7	1	1492-N37	ALLEN BRADLEY	END BARRIER, 1492-H SERIES
8	3	1783-BMS20CGL	ALLEN BRADLEY	STRATIX 5700 ETHERNET SWITCH, MANAGED, 16 FAST COPPER PORTS, 2 GIGABIT ETHERNET COMBO PORTS , 2 GIGABIT ETH FIBER SFP SLOTS, LITE SOFTWARE, DLR
9	1	1783-ETAP1F	ALLEN BRADLEY	ETHERNET/IP TAP2 COPPER PORTS, 1 FIBER PORT
10	1	1783-SFP1GSX	ALLEN BRADLEY	STRATIX FIBER SFP, LC, 1000 MBIT CONNECTIVITY OVER MULTI-MODE FIBER
11	1	AP9613	APC	RELAY CARD
12	1	SMT1500RM2UC	APC	SMART-UPS, 1500VA, RACK MOUNT, 8 OUTLET, SMARTCONNECT
13	1	ABC-1/4-R	BUSSMANN	FUSE, ABC SERIES, 1/4 AMP, 1/4"X1-1/4", FAST-ACTING, CERAMIC
14	2	ABC-3-R	BUSSMANN	FUSE, ABC SERIES, 3 AMP, 1/4"X1-1/4", FAST-ACTING, CERAMIC
15	1	EWMW362825	HOFFMAN	COMMUNICATION CABINET, 19 RACK UNITS
16	1	CFAPPBL1	PANDUIT	OPTICOM RACK MOUNT FIBER ADAPTER PATCH PANELS, FITS 4 FAP'S OR CASSETTES
17	48	CJ688TGBL	PANDUIT	SNAP IN CONNECTOR, MINI-COM, TX6 PLUS UTP, CAT6 RJ45 MODULAR JACK, 8POS, 1-PORT
18	1	CPP48HDWBLY	PANDUIT	PATCH PANEL, MINI-COM, HIGH DENSITY, 48-PORT, FLAT, 1RMU, 1.72"H x 19"W x 1.08"D, STAINLESS STEEL
19	4	FAP6WAQDLCZ	PANDUIT	LC FIBER ADAPTER PANEL, 6 PORT, DUPLEX, MULTIMODE, OM3/OM4
20	1	FMT1	PANDUIT	OPTICOM RACK MOUNT FIBER TRAY
21	1	P12B19M	PANDUIT	POWER DISTRIBUTION UNIT, 1U, INPUT: 5-20P, OUTPUT: (12)5-20R
22	1	WMPLFSE	PANDUIT	CABLE MANAGEMENT, 1 RACK UNIT, 2.7" DEEP
23	1	2904601	PHOENIX CONTACT	POWER SUPPLY - QUINT4-PS/1AC/24DC/10
24	2	RLH-DRB-2	RLH INDUSTRIES	RACK MOUNT DIN RAIL BRACKET, 2 RU, 19" RACK WIDTH

NO.	DATE	BY	REVISION

NOTICE
0 ½ 1
IF THIS BAR DOES NOT MEASURE 1" THEN DRAWING IS NOT TO SCALE

MB DESIGNED
JL DRAWN
BP CHECKED

REGISTERED PROFESSIONAL ENGINEER 86683 OREGON MAY 08, 2012 BENJAMIN E. FERRY
Digitally Signed
EXPIRES: 12-31-2022

WEST YOST
Water. Engineered.

Landis Consulting
ENGINEERING SERVICES
6446 Fairway Ave. SE, Suite 220
Salem, OR 97306
503-584-1576
www.landisconsulting.com

Sweet Home Oregon at its best!

MAHLER WATER RECLAMATION FACILITY IMPROVEMENTS PROJECT PHASE 1

NIP-300
NETWORK INTERFACE PANEL
LAYOUT (FOR CP-300)

PROJECT NO.: 936-50-21-09 | SCALE: AS NOTED | DATE: AUGUST 2022

SHEET
IC-022
115 of 135

DocuSign Envelope ID: 09934EE9-0C55-40A3-8631-9C0AF6797111

G:\PROJECTS\103 - West Yost Associates\1032109 - Sweet Home Wwtp Phase 1 Design\Design\(2) Drawings\Current\sweet Home Wwtp Phase 1 Design\Sheets\IC-300 CP-300 Elevation View.dwg IC-300 CP-300 Elevation View 7/28/2022 6:16 PM JLUTE 24.1s (LMS Tech)

GENERAL SHEET NOTES

1. CP-300 SHALL BE OWNER FURNISHED CONTRACTOR INSTALLED.

SHEET KEY NOTES

1. DIN RAILS FOR POWER STORAGE DEVICES SHALL BE ATTACHED TO THE BACK PANEL USING MACHINE SCREWS, ONE SCREW PER DIN RAIL HOLE.

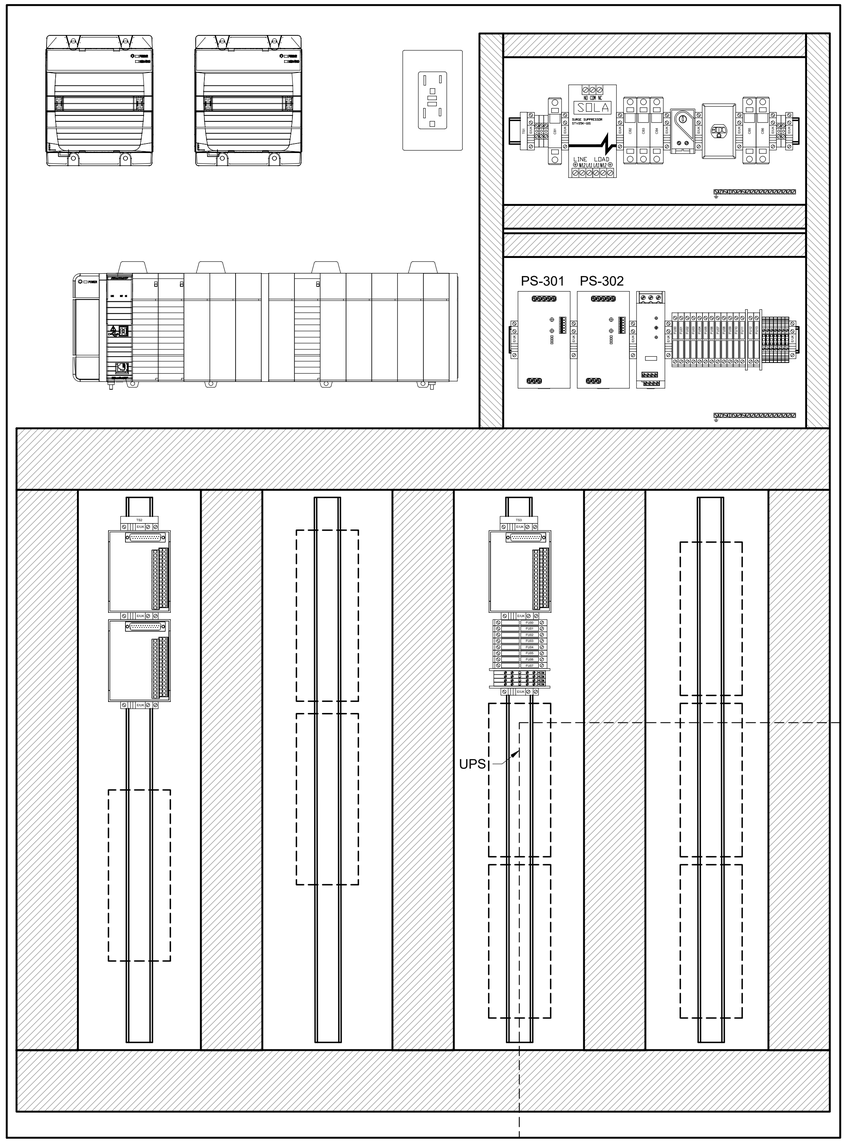

1 CONTROL PANEL CP-300 INTERIOR ELEVATION
SCALE: NTS

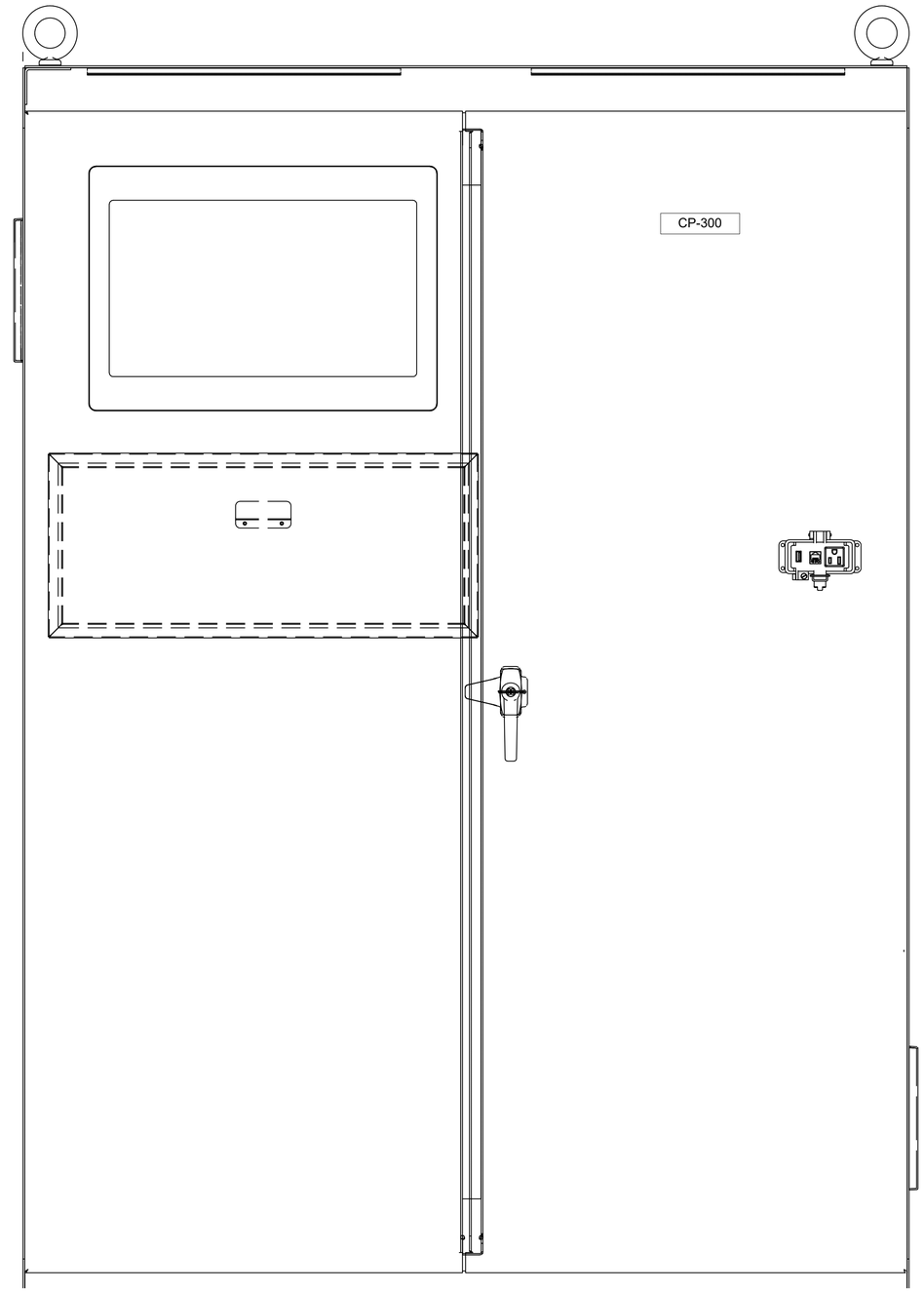

2 CONTROL PANEL CP-300 EXTERIOR ELEVATION
SCALE: NTS

NO.	DATE	BY	REVISION

NOTICE
0 ½ 1
IF THIS BAR DOES NOT MEASURE 1" THEN DRAWING IS NOT TO SCALE

MB DESIGNED
JL DRAWN
BP CHECKED

REGISTERED PROFESSIONAL ENGINEER 86683 OREGON MAY 08, 2012 BENJAMIN E. PERRY
Digitally Signed
EXPIRES: 12-31-2022

WEST YOST
Water. Engineered.

Landis Consulting
ENGINEERING SERVICES
6446 Fairway Ave. SE, Suite 220
Salem, OR 97306
503-584-1576
www.landisconsulting.com

Sweet Home Oregon at its best!

MAHLER WATER RECLAMATION FACILITY IMPROVEMENTS PROJECT PHASE 1

CP-300 ELEVATION VIEW

PROJECT NO.: 936-50-21-09 | SCALE: AS NOTED | DATE: AUGUST 2022

SHEET
IC-300
116 of 135

DocuSign Envelope ID: 09934EE9-0C55-40A3-8631-9C0AF6797111

G:\PROJECTS\103 - West Yost Associates\1032109 - Sweet Home Wwtp Phase 1 Design\Design\(2) Drawings\Current\sweet Home Wwtp Phase 1 Design\Sheets\IC-302 CP-300 Terminal Strip Detail.dwg IC-302 CP-300 Terminal Strip Detail
7/28/2022 6:16 PM JLUTE 24.1s (LMS Tech)

GENERAL SHEET NOTES

1. REFER TO SHEET ###### FOR SPECIFIC DIN RAIL LENGTHS.
2. CP-300 SHALL BE OWNER FURNISHED CONTRACTOR INSTALLED.

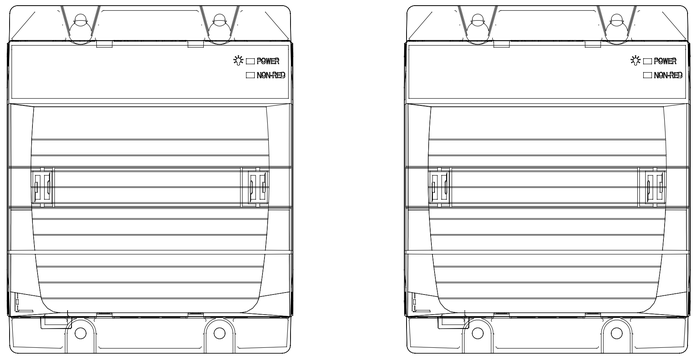

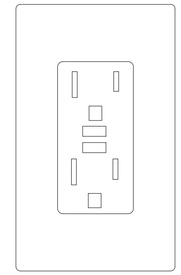

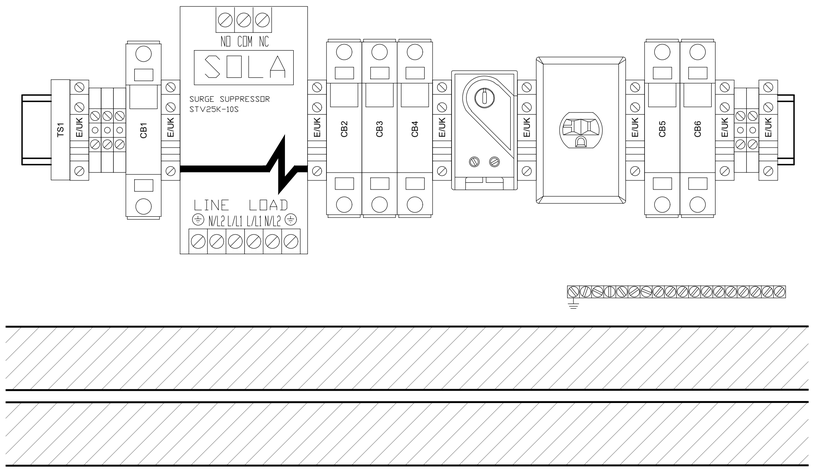

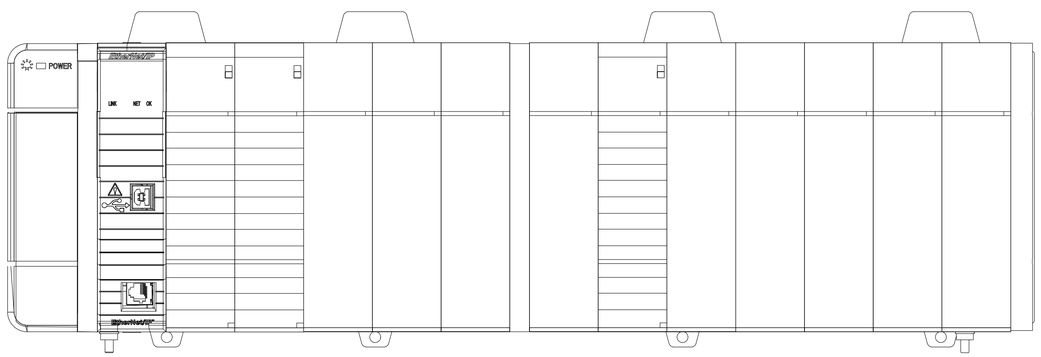

1 PLC ELEVATION
SCALE: NTS

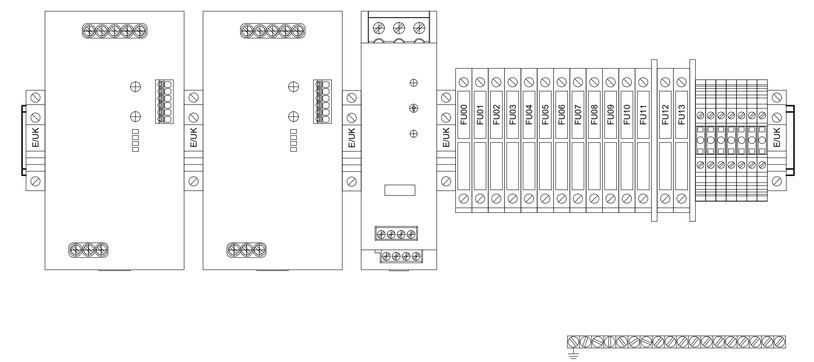

2 TERMINAL STRIP TS1
SCALE: NTS

NO.	DATE	BY	REVISION

NOTICE
0 ½ 1
IF THIS BAR DOES NOT MEASURE 1" THEN DRAWING IS NOT TO SCALE

MB DESIGNED
JL DRAWN
BP CHECKED

REGISTERED PROFESSIONAL ENGINEER 86683 OREGON BENJAMIN E. PERRY
Digitally Signed
MAY 08, 2012
EXPIRES: 12-31-2022

WEST YOST
Water. Engineered.

Landis Consulting
ENGINEERING SERVICES
6446 Fairway Ave. SE, Suite 220
Salem, OR 97306
503-584-1576
www.landisconsulting.com

Sweet Home Oregon at its best!

MAHLER WATER RECLAMATION FACILITY IMPROVEMENTS PROJECT PHASE 1

CP-300 TERMINAL STRIP DETAIL

PROJECT NO.: 936-50-21-09 | SCALE: AS NOTED | DATE: AUGUST 2022

SHEET
IC-302

DocuSign Envelope ID: 09934EE9-0C55-40A3-8631-9C0AF6797111

G:\PROJECTS\103 - West Yost Associates\1032109 - Sweet Home Wwtp Phase 1 Design\Design\(2) Drawings\Current\sweet Home Wwtp Phase 1 Design\Sheets\IC-303 CP-300 Terminal Strip Detail.dwg IC-303 CP-300 Terminal Strip Detail
7/28/2022 6:16 PM JLUTE 24.1s (LMS Tech)

GENERAL SHEET NOTES

1. REFER TO SHEET ###### FOR SPECIFIC DIN RAIL LENGTHS.
2. CP-300 SHALL BE OWNER FURNISHED CONTRACTOR INSTALLED.

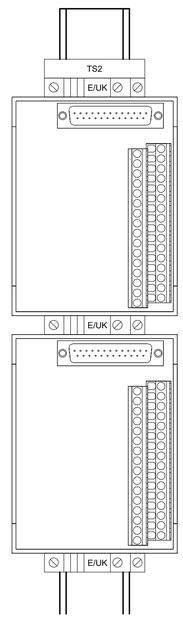

1 TERMINAL STRIP TS2
SCALE: NTS

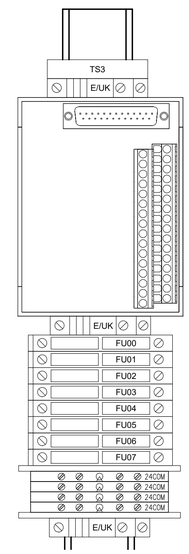

2 TERMINAL STRIP TS5
SCALE: NTS

NO.	DATE	BY	REVISION

NOTICE
0 ½ 1
IF THIS BAR DOES NOT MEASURE 1" THEN DRAWING IS NOT TO SCALE

MB
DESIGNED
JL
DRAWN
BP
CHECKED

REGISTERED PROFESSIONAL ENGINEER 86683 OREGON MAY 08, 2012 BENJAMIN E. FERRY
Digitally Signed
EXPIRES: 12-31-2022

WEST YOST
Water. Engineered.

Landis Consulting
ENGINEERING SERVICES
6446 Fairway Ave. SE, Suite 220
Salem, OR 97306
503-584-1576
www.landisconsulting.com

Sweet Home
Oregon at its best!

MAHLER WATER RECLAMATION FACILITY IMPROVEMENTS PROJECT PHASE 1

CP-300 TERMINAL STRIP DETAIL

PROJECT NO.: 936-50-21-09 | SCALE: AS NOTED | DATE: AUGUST 2022

SHEET
IC-303
118 of 135

DocuSign Envelope ID: 09934EE9-0C55-40A3-8631-9C0AF6797111

G:\PROJECTS\103 - West Yost Associates\1032109 - Sweet Home Wwtp Phase 1 Design\Sheets\IC-310 CP-300 Power Distribution Schematic.dwg IC-310 CP-300 Power Distribution Schematic 7/28/2022 6:59 PM JLUTE 24.1s (LMS Tech)

GENERAL SHEET NOTES

1. CONTRACTOR SHALL INDICATE INSTRUMENT TERMINAL BLOCK NUMBERS ON AS-BUILT DRAWINGS.
2. CP-300 SHALL BE OWNER FURNISHED CONTRACTOR INSTALLED.

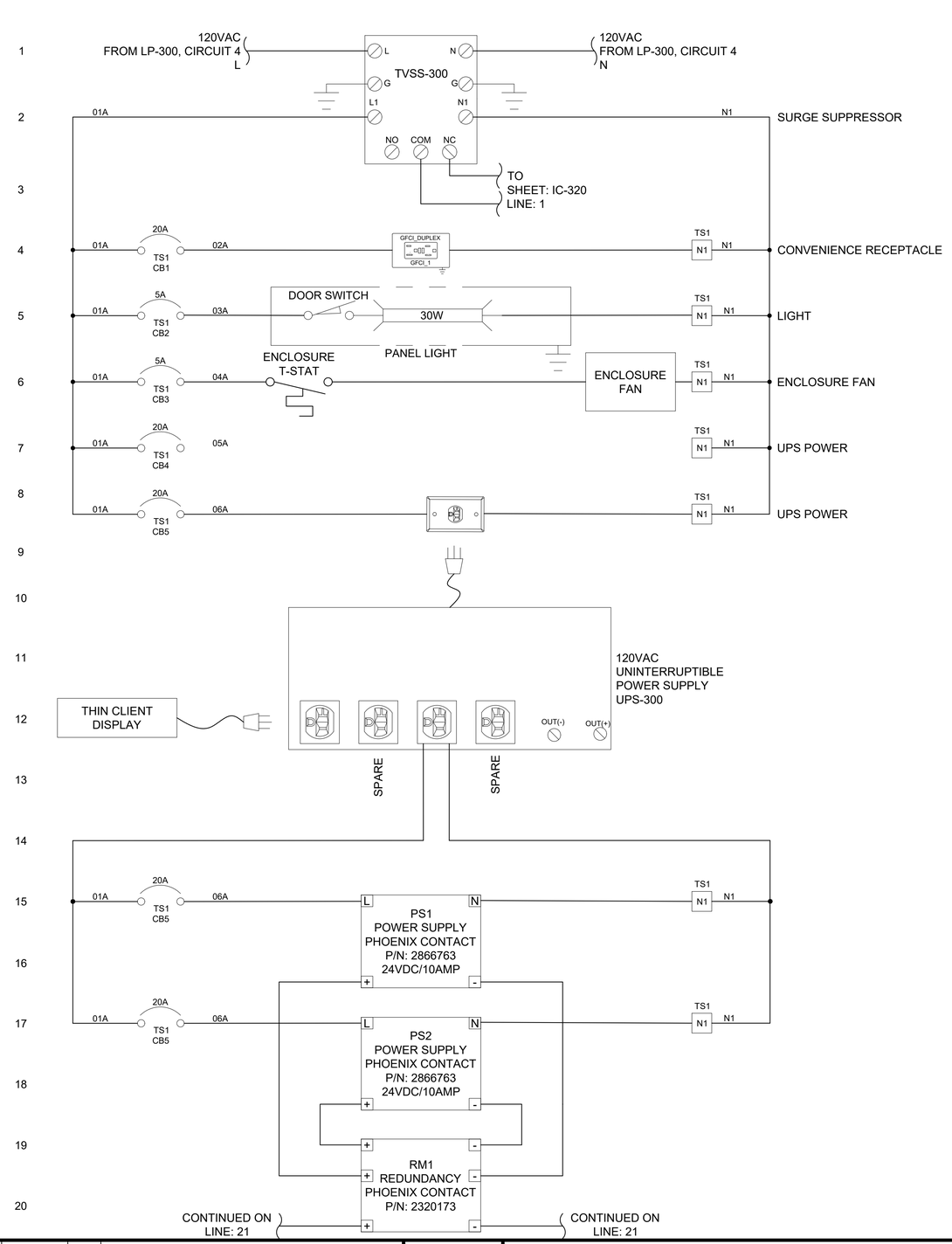

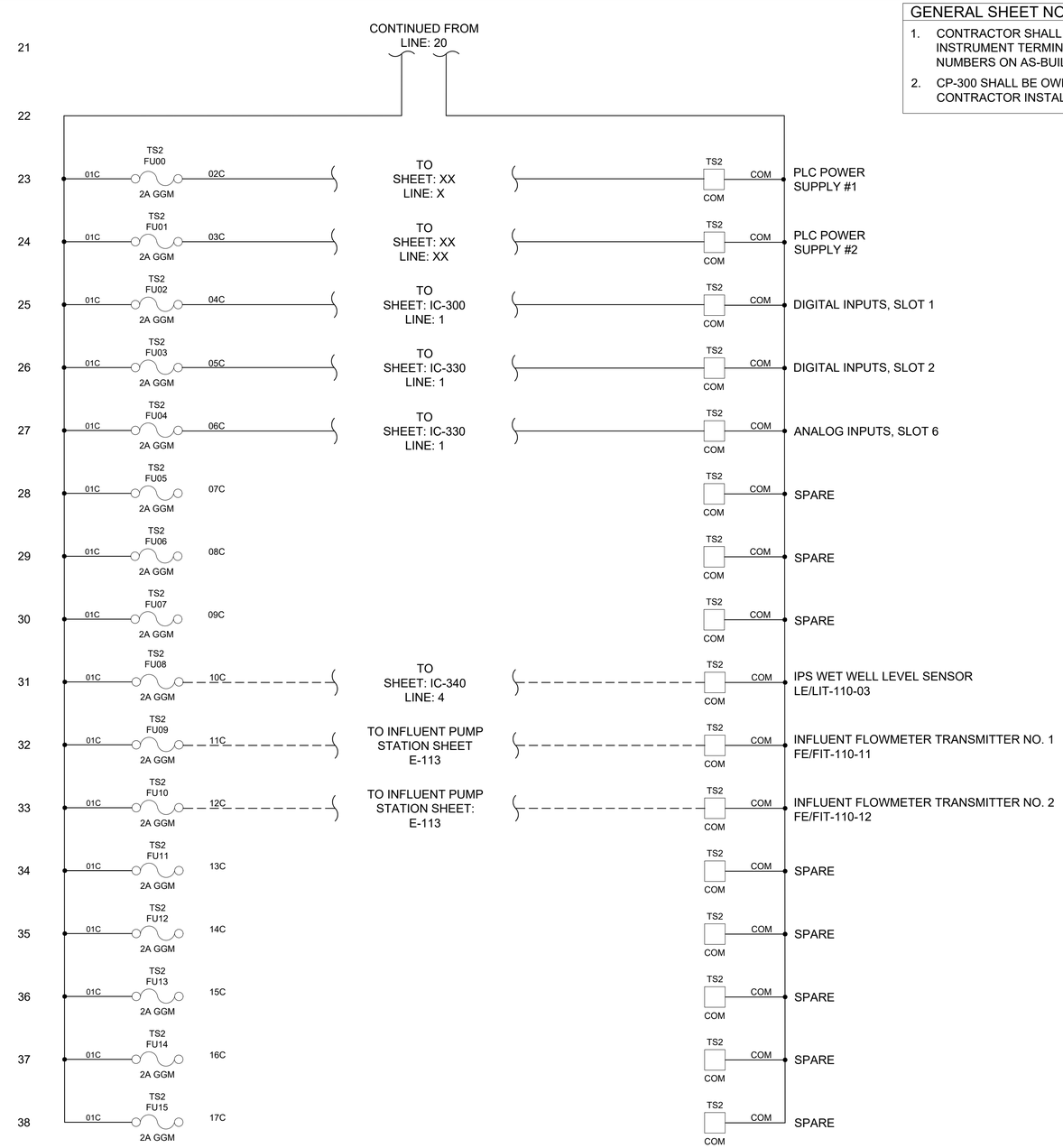

NO.	DATE	BY	REVISION

NOTICE
0 ½ 1
IF THIS BAR DOES NOT MEASURE 1" THEN DRAWING IS NOT TO SCALE

MB DESIGNED
JL DRAWN
BP CHECKED

REGISTERED PROFESSIONAL ENGINEER 86683 Digitally Signed OREGON MAY 08, 2012 BENJAMIN E. PERRY
EXPIRES: 12-31-2022

WEST YOST
Water. Engineered.

Landis Consulting
ENGINEERING SERVICES
6446 Fairway Ave. SE, Suite 220
Salem, OR 97306
503-584-1576
www.landisconsulting.com

Sweet Home Oregon at its best!

MAHLER WATER RECLAMATION FACILITY IMPROVEMENTS PROJECT PHASE 1

CP-300 POWER DISTRIBUTION SCHEMATIC

PROJECT NO.: 936-50-21-09 | SCALE: AS NOTED | DATE: AUGUST 2022

SHEET
IC-310

DocuSign Envelope ID: 09934EE9-0C55-40A3-8631-9C0AF6797111

G:\PROJECTS\103 - West Yost Associates\1032109 - Sweet Home Wwtp Phase 1 Design\Sheets\IC-320 CP-300 Digital Inputs Slot 1.dwg IC-320 CP-300 Digital Inputs Slot 1
7/28/2022 7:00 PM JLUTE 24.1s (LMS Tech)

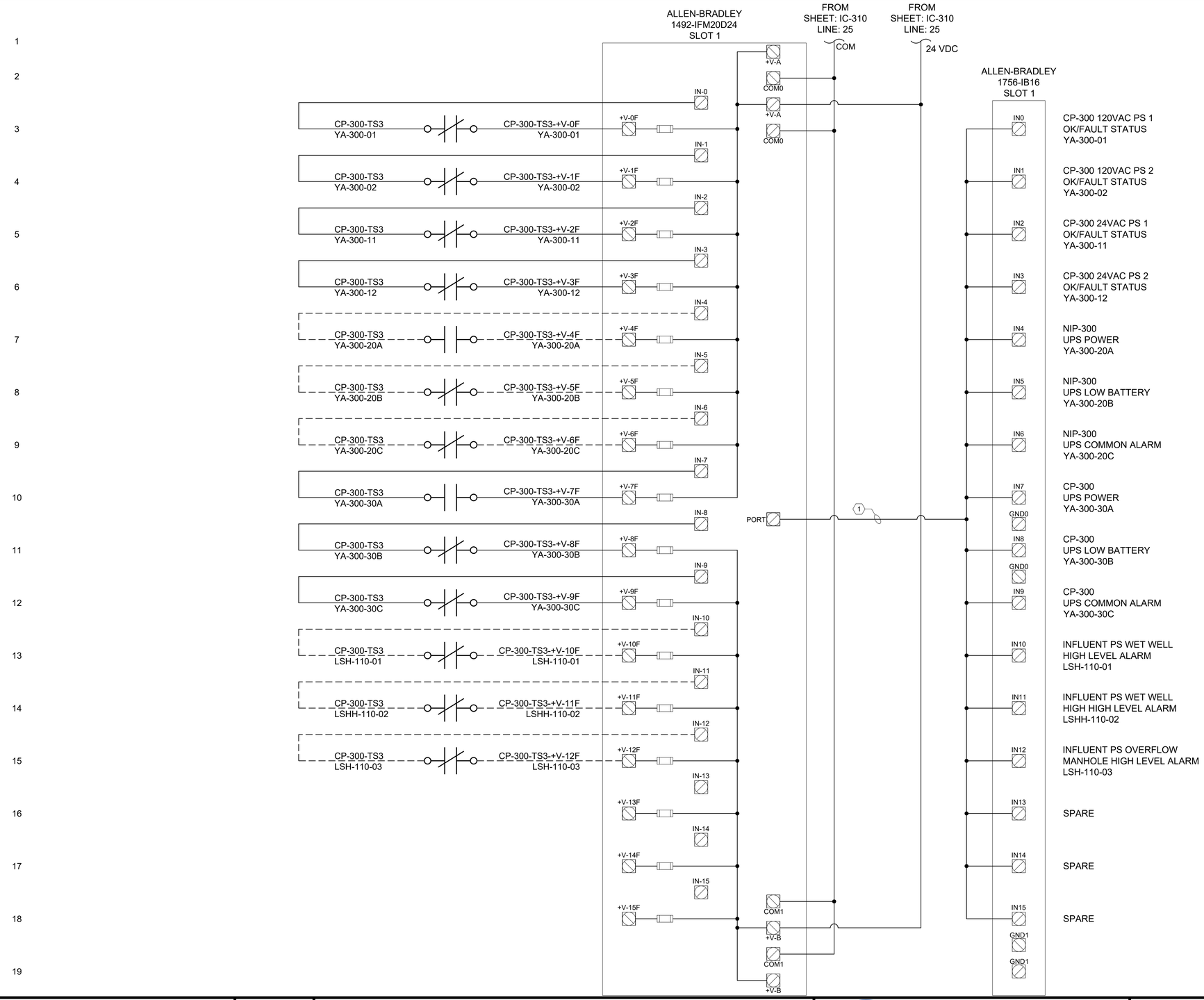

GENERAL SHEET NOTES

1. CONTRACTOR SHALL INDICATE INSTRUMENT TERMINAL BLOCK NUMBERS ON AS-BUILT DRAWINGS.
2. CP-300 SHALL BE OWNER FURNISHED CONTRACTOR INSTALLED.
3. ALL FIELD WIRING SHALL BE PROVIDED BY THE CONTRACTOR.

SHEET KEY NOTES

1. INTERFACE MODULE TO I/O MODULE AB 1492-CABLE010X.

NO.	DATE	BY	REVISION

NOTICE
0 ½ 1
IF THIS BAR DOES NOT MEASURE 1" THEN DRAWING IS NOT TO SCALE

MB DESIGNED
JL DRAWN
BP CHECKED

REGISTERED PROFESSIONAL ENGINEER 86683 OREGON MAY 08, 2012 BENJAMIN E. PERRY
Digitally Signed
EXPIRES: 12-31-2022

WEST YOST
Water. Engineered.

Landis Consulting
ENGINEERING SERVICES
6446 Fairway Ave. SE, Suite 220
Salem, OR 97306
503-584-1576
www.landisconsulting.com

Sweet Home Oregon at its best!

MAHLER WATER RECLAMATION FACILITY IMPROVEMENTS PROJECT PHASE 1

CP-300 DIGITAL INPUTS SLOT 1

PROJECT NO.: 936-50-21-09 | SCALE: AS NOTED | DATE: AUGUST 2022

SHEET
IC-320
120 of 135

DocuSign Envelope ID: 09934EE9-0C55-40A3-8631-9C0AF6797111

G:\PROJECTS\103 - West Yost Associates\1032109 - Sweet Home Wwtp Phase 1 Design\Sheets\IC-321 CP-300 Digital Inputs Slot 2.dwg IC-321 CP-300 Digital Inputs Slot 2
7/28/2022 7:01 PM JLUTE 24.1s (LMS Tech)

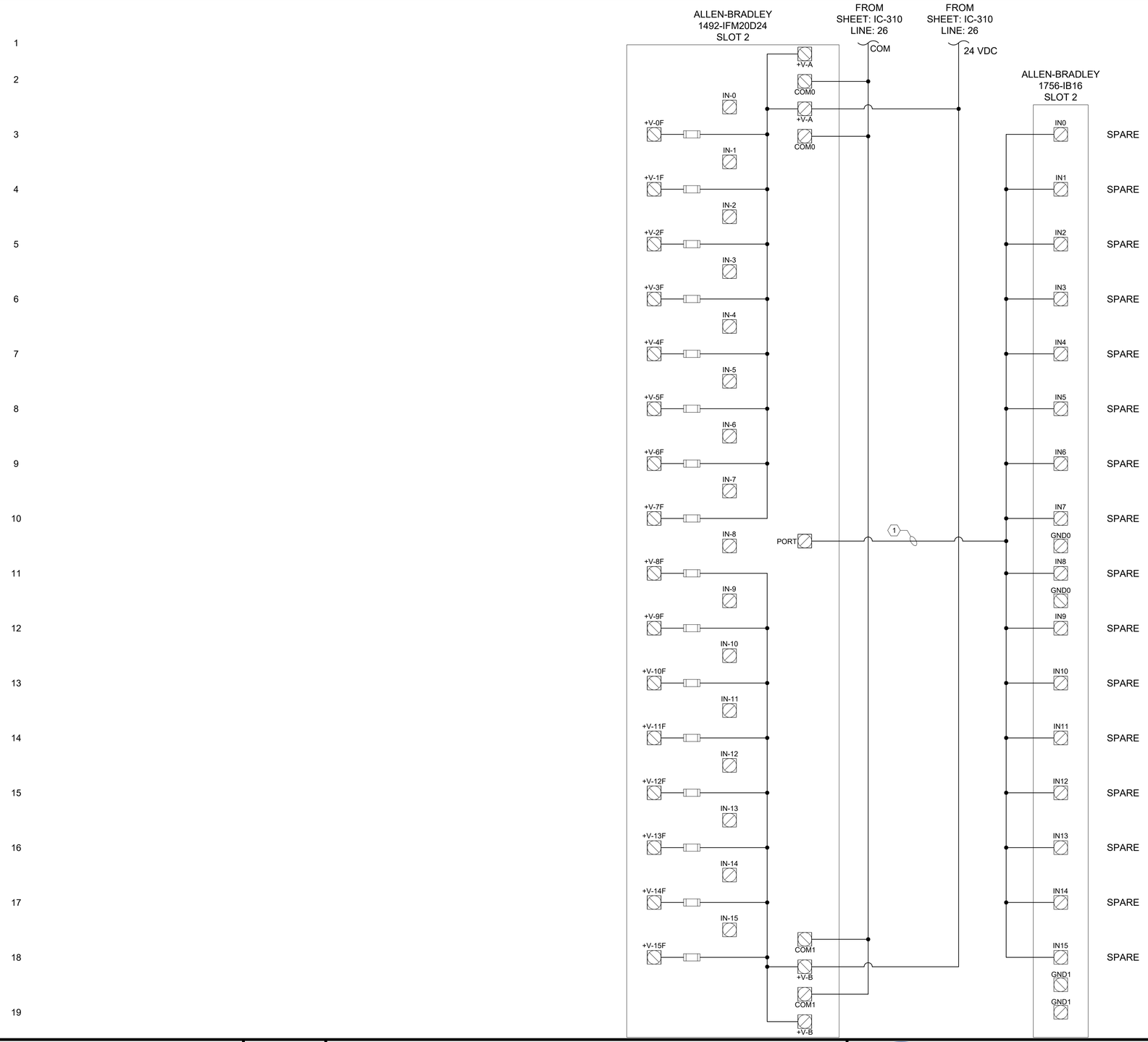

GENERAL SHEET NOTES

1. CONTRACTOR SHALL INDICATE INSTRUMENT TERMINAL BLOCK NUMBERS ON AS-BUILT DRAWINGS.
2. CP-300 SHALL BE OWNER FURNISHED CONTRACTOR INSTALLED.
3. ALL FIELD WIRING SHALL BE PROVIDED BY THE CONTRACTOR.

SHEET KEY NOTES

1. INTERFACE MODULE TO I/O MODULE AB 1492-CABLE010X.

NO.	DATE	BY	REVISION

NOTICE
0 ½ 1
IF THIS BAR DOES NOT MEASURE 1" THEN DRAWING IS NOT TO SCALE

MB
DESIGNED
JL
DRAWN
BP
CHECKED

REGISTERED PROFESSIONAL ENGINEER 86683 OREGON BENJAMIN E. PERRY
Digitally Signed
MAY 08, 2012
EXPIRES: 12-31-2022

WEST YOST
Water. Engineered.

Landis Consulting
ENGINEERING SERVICES
6446 Fairway Ave. SE, Suite 220
Salem, OR 97306
503-584-1576
www.landisconsulting.com

Sweet Home Oregon at its best!

MAHLER WATER RECLAMATION FACILITY IMPROVEMENTS PROJECT PHASE 1

CP-300 DIGITAL INPUTS SLOT 2

PROJECT NO.: 936-50-21-09 | SCALE: AS NOTED | DATE: AUGUST 2022

SHEET
IC-321
121 of 135

DocuSign Envelope ID: 09934EE9-0C55-40A3-8631-9C0AF6797111

G:\PROJECTS\103 - West Yost Associates\1032109 - Sweet Home Wwtp Phase 1 Design\Design\(2) Drawings\Current\sweet Home Wwtp Phase 1 Design\Sheets\IC-330 CP-300 Analog Inputs Slot 6 (1 of 2) 7/28/2022 7:05 PM JLUTE 24.1s (LMS Tech)
IC-330 CP-300 Analog Inputs Slot 6 (1 Of 2).dwg

GENERAL SHEET NOTES

1. CONTRACTOR SHALL INDICATE INSTRUMENT TERMINAL BLOCK NUMBERS ON AS-BUILT DRAWINGS.
2. THE CABLE BETWEEN THE 1756-IF8H AND THE 1492-AIFM8 IS MANUFACTURER SUPPLIED CABLE.
3. CP-300 SHALL BE OWNER FURNISHED CONTRACTOR INSTALLED.
4. ALL FIELD WIRING SHALL BE PROVIDED BY THE THE CONTRACTOR.

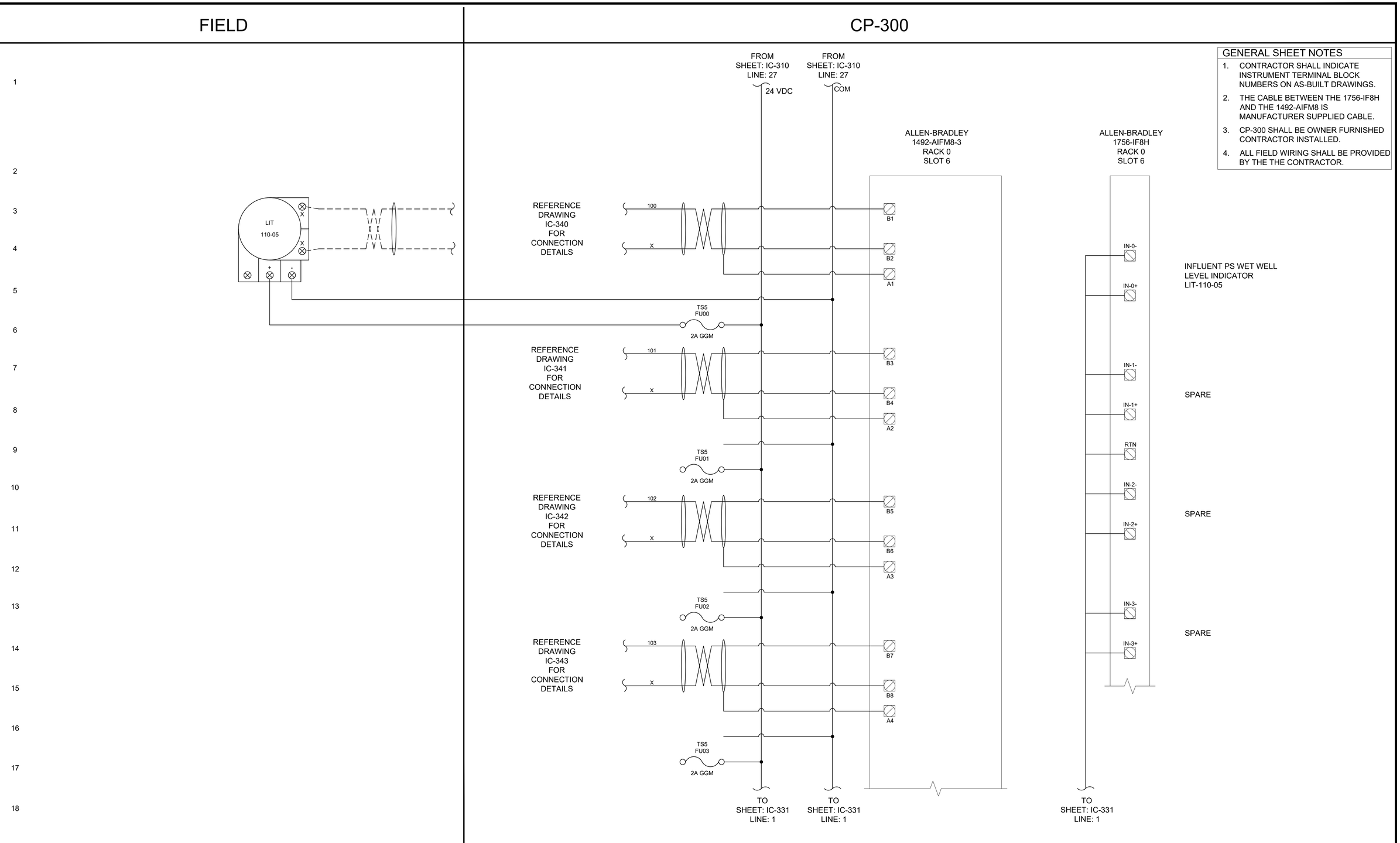

NO.	DATE	BY	REVISION

NOTICE
0 ½ 1
IF THIS BAR DOES NOT MEASURE 1" THEN DRAWING IS NOT TO SCALE

MB
DESIGNED
JL
DRAWN
BP
CHECKED

REGISTERED PROFESSIONAL ENGINEER
86683
Digitally Signed
OREGON
MAY 08, 2013
BENJAMIN E. PERRY
EXPIRES: 12-31-2022

WEST YOST
Water. Engineered.

Landis Consulting
ENGINEERING SERVICES
6446 Fairway Ave. SE, Suite 220
Salem, OR 97306
503-584-1576
www.landisconsulting.com

Sweet Home
Oregon at its best!

MAHLER WATER
RECLAMATION FACILITY
IMPROVEMENTS PROJECT
PHASE 1

CP-300 ANALOG INPUTS SLOT 6 (1 OF 2)

PROJECT NO.: 936-50-21-09 | SCALE: AS NOTED | DATE: AUGUST 2022

SHEET
IC-330

DocuSign Envelope ID: 09934EE9-0C55-40A3-8631-9C0AF6797111

G:\PROJECTS\103 - West Yost Associates\1032109 - Sweet Home Wwtp Phase 1 Design\Design\(2) Drawings\Current\sweet Home Wwtp Phase 1 Design\Sheets\IC-331 CP-300 Analog Inputs Slot 6 (2 Of 2).dwg IC-331 CP-300 Analog Inputs Slot 6 (2 of 2) 7/28/2022 7:07 PM JLUTE 24.1s (LMS Tech)

FIELD

1
2
3
4
5
6
7
8
9
10
11
12
13
14
15
16
17
18

CP-300

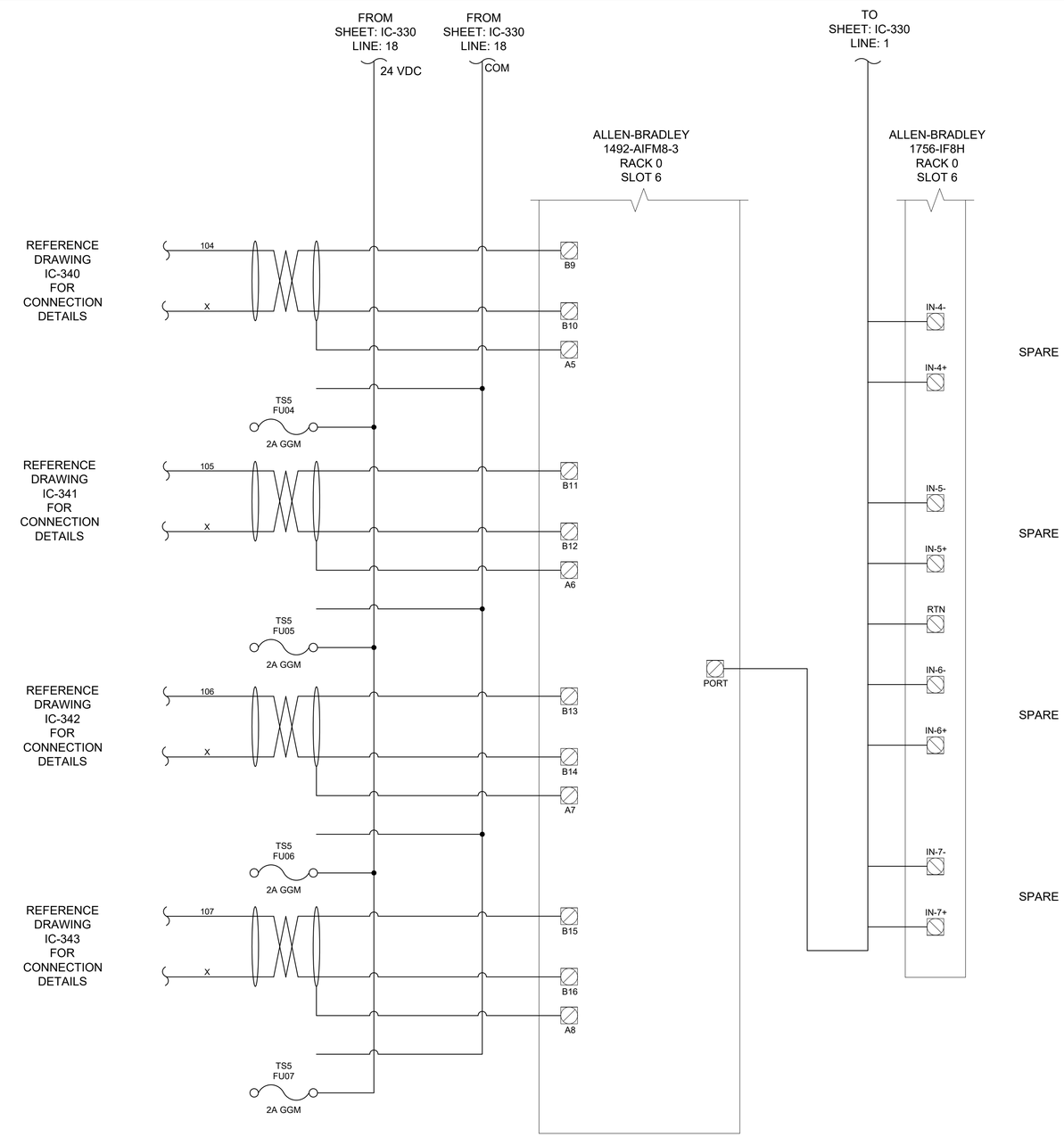

GENERAL SHEET NOTES

1. CONTRACTOR SHALL INDICATE INSTRUMENT TERMINAL BLOCK NUMBERS ON AS-BUILT DRAWINGS.
2. THE CABLE BETWEEN THE 1756-IF8H AND THE 1492-AIFM8 IS MANUFACTURER SUPPLIED CABLE.
3. CP-300 SHALL BE OWNER FURNISHED CONTRACTOR INSTALLED.
4. ALL FIELD WIRING SHALL BE PROVIDED BY THE CONTRACTOR.

NO.	DATE	BY	REVISION

NOTICE
0 ½ 1
IF THIS BAR DOES NOT MEASURE 1" THEN DRAWING IS NOT TO SCALE

MB
DESIGNED
JL
DRAWN
BP
CHECKED

REGISTERED PROFESSIONAL ENGINEER 86683 OREGON BENJAMIN E. PERRY
Digitally Signed
MAY 08, 2013
EXPIRES: 12-31-2022

WEST YOST
Water. Engineered.

Landis Consulting
ENGINEERING SERVICES
6446 Fairway Ave. SE, Suite 220
Salem, OR 97306
503-584-1576
www.landisconsulting.com

Sweet Home
Oregon at its best!

MAHLER WATER RECLAMATION FACILITY IMPROVEMENTS PROJECT PHASE 1

CP-300 ANALOG INPUTS SLOT 6 (2 OF 2)

PROJECT NO.: 936-50-21-09 | SCALE: AS NOTED | DATE: AUGUST 2022

SHEET
IC-331
123 of 135

DocuSign Envelope ID: 09934EE9-0C55-40A3-8631-9C0AF6797111

G:\PROJECTS\103 - West Yost Associates\1032109 - Sweet Home Wwtp Phase 1 Design\Design\(2) Drawings\Current\sweet Home Wwtp Phase 1 Design\Sheets\IC-340 CP-300 Instrument Loop Diagram Slot 6 Point 0.dwg IC-340 CP-300 Instrument Loop Diagram Slot 6 Point 0 7/28/2022 7:07 PM JLUTE 24.1s (LMS Tech)

FIELD	CP-300	PLC

GENERAL SHEET NOTES

1. CONTRACTOR SHALL INDICATE INSTRUMENT TERMINAL BLOCK NUMBERS ON AS-BUILT DRAWINGS.
2. CP-300 SHALL BE OWNER FURNISHED CONTRACTOR INSTALLED.
3. ALL FIELD WIRING SHALL BE PROVIDE BY THE CONTRACTOR.

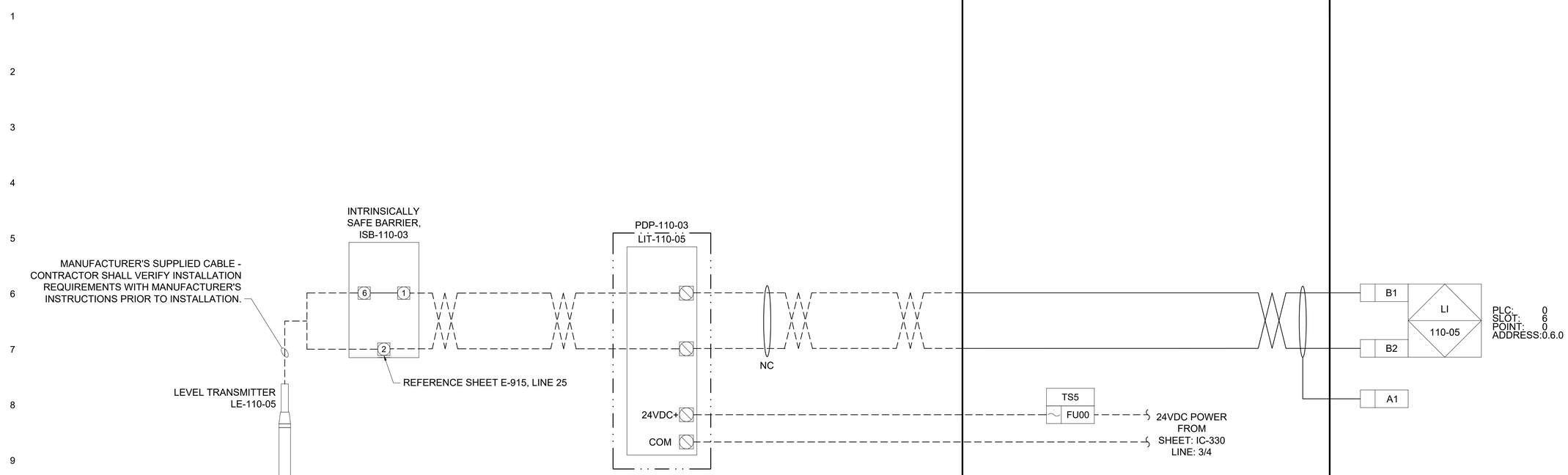

NO.	DATE	BY	REVISION

NOTICE

0 ½ 1

IF THIS BAR DOES NOT MEASURE 1" THEN DRAWING IS NOT TO SCALE

MB
DESIGNED
JL
DRAWN
BP
CHECKED

REGISTERED PROFESSIONAL ENGINEER 86683 Digitally Signed OREGON MAY 08, 2012 BENJAMIN E. PERRY
EXPIRES: 12-31-2022

WEST YOST
Water. Engineered.

Landis Consulting
ENGINEERING SERVICES
6446 Fairway Ave. SE, Suite 220
Salem, OR 97306
503-584-1576
www.landisconsulting.com

Sweet Home Oregon at its best!

MAHLER WATER RECLAMATION FACILITY IMPROVEMENTS PROJECT PHASE 1

CP-300 INSTRUMENT LOOP DIAGRAM
SLOT 6 POINT 0

PROJECT NO.: 936-50-21-09 | SCALE: AS NOTED | DATE: AUGUST 2022

SHEET
IC-340
124 of 135

DocuSign Envelope ID: 09934EE9-0C55-40A3-8631-9C0AF6797111

G:\PROJECTS\103 - West Yost Associates\1032109 - Sweet Home Wwtp Phase 1 Design\Design\(2) Drawings\Current\sweet Home Wwtp Phase 1 Design\Sheets\IC-341 CP-300 Instrument Loop Diagram Slot 6 Point 1.dwg IC-341 CP-300 Instrument Loop Diagram Slot 6 Point 1 7/28/2022 7:08 PM JLUTE 24.1s (LMS Tech)

FIELD	CP-300	PLC

1
2
3
4
5
6
7
8
9
10
11
12
13
14
15

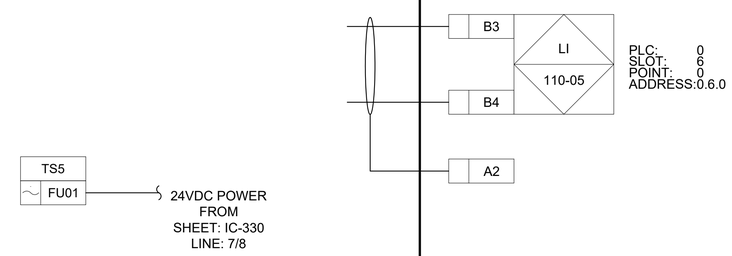

GENERAL SHEET NOTES

1. CONTRACTOR SHALL INDICATE INSTRUMENT TERMINAL BLOCK NUMBERS ON AS-BUILT DRAWINGS.
2. CP-300 SHALL BE OWNER FURNISHED CONTRACTOR INSTALLED.
3. ALL FIELD WIRING SHALL BE PROVIDED BY THE CONTRACTOR.

NO.	DATE	BY	REVISION

NOTICE
0 ½ 1
IF THIS BAR DOES NOT MEASURE 1" THEN DRAWING IS NOT TO SCALE

MB DESIGNED
JL DRAWN
BP CHECKED

REGISTERED PROFESSIONAL ENGINEER 86683 OREGON MAY 08, 2012 BENJAMIN E. PERRY
Digitally Signed
EXPIRES: 12-31-2022

WEST YOST
Water. Engineered.

Landis Consulting
ENGINEERING SERVICES
6446 Fairway Ave. SE, Suite 220
Salem, OR 97306
503-584-1576
www.landisconsulting.com

Sweet Home Oregon at its best!

MAHLER WATER RECLAMATION FACILITY IMPROVEMENTS PROJECT PHASE 1

CP-300 INSTRUMENT LOOP DIAGRAM
SLOT 6 POINT 1

PROJECT NO.: 936-50-21-09 | SCALE: AS NOTED | DATE: AUGUST 2022

SHEET
IC-341
125 of 135

DocuSign Envelope ID: 09934EE9-0C55-40A3-8631-9C0AF6797111

G:\PROJECTS\103 - West Yost Associates\1032109 - Sweet Home Wwtp Phase 1 Design\Design\(2) Drawings\Current\sweet Home Wwtp Phase 1 Design\Sheets\IC-342 CP-300 Instrument Loop Diagram Slot 6 Point 2.dwg IC-342 CP-300 Instrument Loop Diagram Slot 6 Point 2 7/28/2022 7:30 PM JLUTE 24.1s (LMS Tech)

FIELD	CP-300	PLC

1
2
3
4
5
6
7
8
9
10
11
12
13
14
15

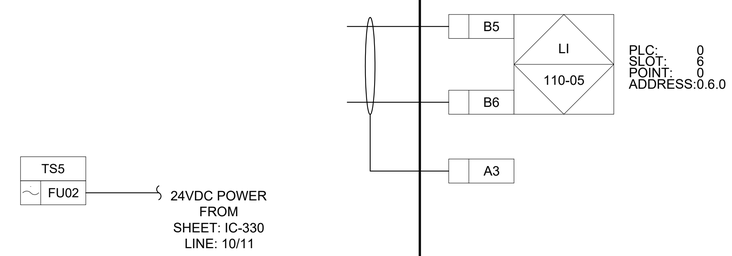

GENERAL SHEET NOTES

1. CONTRACTOR SHALL INDICATE INSTRUMENT TERMINAL BLOCK NUMBERS ON AS-BUILT DRAWINGS.
2. CP-300 SHALL BE OWNER FURNISHED CONTRACTOR INSTALLED.
3. ALL FIELD WIRING SHALL BE PROVIDED BY THE CONTRACTOR.

NO.	DATE	BY	REVISION

NOTICE
0 ½ 1
IF THIS BAR DOES NOT MEASURE 1" THEN DRAWING IS NOT TO SCALE

MB DESIGNED
JL DRAWN
BP CHECKED

REGISTERED PROFESSIONAL ENGINEER 86683 OREGON MAY 08, 2012 BENJAMIN E. PERRY
Digitally Signed
EXPIRES: 12-31-2022

WEST YOST
Water. Engineered.

Landis Consulting
ENGINEERING SERVICES
6446 Fairway Ave. SE, Suite 220
Salem, OR 97306
503-584-1576
www.landisconsulting.com

Sweet Home Oregon at its best!

MAHLER WATER RECLAMATION FACILITY IMPROVEMENTS PROJECT PHASE 1

CP-300 INSTRUMENT LOOP DIAGRAM
SLOT 6 POINT 2

PROJECT NO.: 936-50-21-09 | SCALE: AS NOTED | DATE: AUGUST 2022

SHEET
IC-342

DocuSign Envelope ID: 09934EE9-0C55-40A3-8631-9C0AF6797111

G:\PROJECTS\103 - West Yost Associates\1032109 - Sweet Home Wwtp Phase 1 Design\Design\(2) Drawings\Current\sweet Home Wwtp Phase 1 Design\Sheets\IC-343 CP-300 Instrument Loop Diagram Slot 6 Point 3.dwg IC-343 CP-300 Instrument Loop Diagram Slot 6 Point 3 7/28/2022 7:09 PM JLUTE 24.1s (LMS Tech)

FIELD	CP-300	PLC

1
2
3
4
5
6
7
8
9
10
11
12
13
14
15

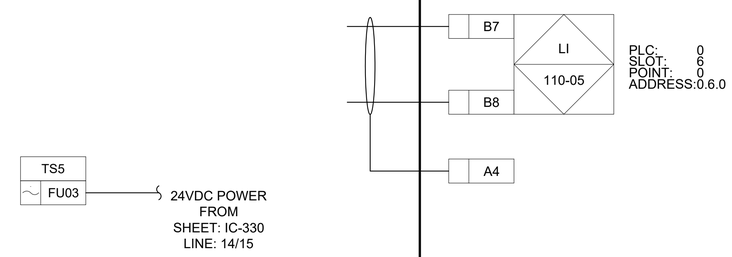

GENERAL SHEET NOTES

1. CONTRACTOR SHALL INDICATE INSTRUMENT TERMINAL BLOCK NUMBERS ON AS-BUILT DRAWINGS.
2. CP-300 SHALL BE OWNER FURNISHED CONTRACTOR INSTALLED.
3. ALL FIELD WIRING SHALL BE PROVIDED BY THE CONTRACTOR.

NO.	DATE	BY	REVISION

NOTICE
0 ½ 1
IF THIS BAR DOES NOT MEASURE 1" THEN DRAWING IS NOT TO SCALE

MB DESIGNED
JL DRAWN
BP CHECKED

REGISTERED PROFESSIONAL ENGINEER 86683 OREGON MAY 08, 2012 BENJAMIN E. PERRY
Digitally Signed
EXPIRES: 12-31-2022

WEST YOST
Water. Engineered.

Landis Consulting
ENGINEERING SERVICES
6446 Fairway Ave. SE, Suite 220
Salem, OR 97306
503-584-1576
www.landisconsulting.com

Sweet Home Oregon at its best!

MAHLER WATER RECLAMATION FACILITY IMPROVEMENTS PROJECT PHASE 1

CP-300 INSTRUMENT LOOP DIAGRAM
SLOT 6 POINT 3

PROJECT NO.: 936-50-21-09 | SCALE: AS NOTED | DATE: AUGUST 2022

SHEET
IC-343
127 of 135

DocuSign Envelope ID: 09934EE9-0C55-40A3-8631-9C0AF6797111

G:\PROJECTS\103 - West Yost Associates\1032109 - Sweet Home Wwtp Phase 1 Design\Design\(2) Drawings\Current\sweet Home Wwtp Phase 1 Design\Sheets\IC-344 CP-300 Instrument Loop Diagram Slot 6 Point 4.dwg IC-344 CP-300 Instrument Loop Diagram Slot 6 Point 4 7/28/2022 7:10 PM JLUTE 24.1s (LMS Tech)

FIELD	CP-300	PLC

1
2
3
4
5
6
7
8
9
10
11
12
13
14
15

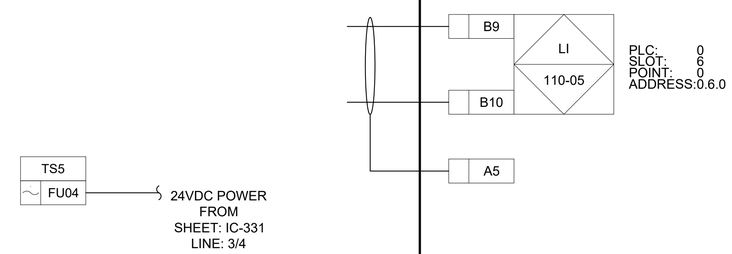

GENERAL SHEET NOTES

1. CONTRACTOR SHALL INDICATE INSTRUMENT TERMINAL BLOCK NUMBERS ON AS-BUILT DRAWINGS.
2. CP-300 SHALL BE OWNER FURNISHED CONTRACTOR INSTALLED.
3. ALL FIELD WIRING SHALL BE PROVIDED BY THE CONTRACTOR.

NO.	DATE	BY	REVISION

NOTICE
0 ½ 1
IF THIS BAR DOES NOT MEASURE 1" THEN DRAWING IS NOT TO SCALE

MB DESIGNED
JL DRAWN
BP CHECKED

REGISTERED PROFESSIONAL ENGINEER 86683 OREGON MAY 08, 2012 BENJAMIN E. PERRY
Digitally Signed
EXPIRES: 12-31-2022

WEST YOST
Water. Engineered.

Landis Consulting
ENGINEERING SERVICES
6446 Fairway Ave. SE, Suite 220
Salem, OR 97306
503-584-1576
www.landisconsulting.com

Sweet Home Oregon at its best!

MAHLER WATER RECLAMATION FACILITY IMPROVEMENTS PROJECT PHASE 1

CP-300 INSTRUMENT LOOP DIAGRAM
SLOT 6 POINT 4

PROJECT NO.: 936-50-21-09 | SCALE: AS NOTED | DATE: AUGUST 2022

SHEET
IC-344
128 of 135

DocuSign Envelope ID: 09934EE9-0C55-40A3-8631-9C0AF6797111

G:\PROJECTS\103 - West Yost Associates\1032109 - Sweet Home Wwtp Phase 1 Design\Design\(2) Drawings\Current\sweet Home Wwtp Phase 1 Design\Sheets\IC-345 CP-300 Instrument Loop Diagram Slot 6 Point 5.dwg IC-345 CP-300 Instrument Loop Diagram Slot 6 Point 5 7/28/2022 7:10 PM JLUTE 24.1s (LMS Tech)

FIELD	CP-300	PLC

1
2
3
4
5
6
7
8
9
10
11
12
13
14
15

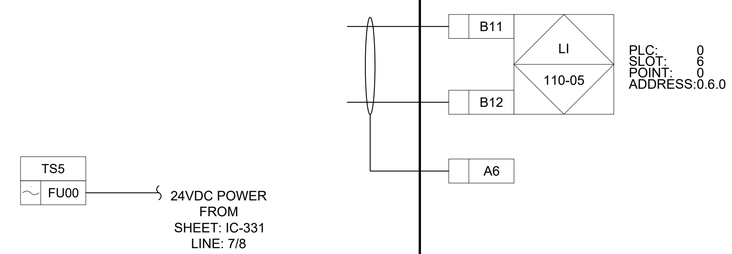

GENERAL SHEET NOTES

1. CONTRACTOR SHALL INDICATE INSTRUMENT TERMINAL BLOCK NUMBERS ON AS-BUILT DRAWINGS.
2. CP-300 SHALL BE OWNER FURNISHED CONTRACTOR INSTALLED.
3. ALL FIELD WIRING SHALL BE PROVIDED BY THE CONTRACTOR.

NO.	DATE	BY	REVISION

NOTICE
0 ½ 1
IF THIS BAR DOES NOT MEASURE 1" THEN DRAWING IS NOT TO SCALE

MB DESIGNED
JL DRAWN
BP CHECKED

REGISTERED PROFESSIONAL ENGINEER 86683 OREGON MAY 08, 2012 BENJAMIN E. PERRY
Digitally Signed
EXPIRES: 12-31-2022

WEST YOST
Water. Engineered.

Landis Consulting
ENGINEERING SERVICES
6446 Fairway Ave. SE, Suite 220
Salem, OR 97306
503-584-1576
www.landisconsulting.com

Sweet Home
Oregon at its best!

MAHLER WATER RECLAMATION FACILITY IMPROVEMENTS PROJECT PHASE 1

CP-300 INSTRUMENT LOOP DIAGRAM
SLOT 6 POINT 5

PROJECT NO.: 936-50-21-09 | SCALE: AS NOTED | DATE: AUGUST 2022

SHEET
IC-345

DocuSign Envelope ID: 09934EE9-0C55-40A3-8631-9C0AF6797111

G:\PROJECTS\103 - West Yost Associates\1032109 - Sweet Home Wwtp Phase 1 Design\Design\(2) Drawings\Current\sweet Home Wwtp Phase 1 Design\Sheets\IC-346 CP-300 Instrument Loop Diagram Slot 6 Point 6.dwg IC-346 CP-300 Instrument Loop Diagram Slot 6 Point 6 7/28/2022 7:11 PM JLUTE 24.1s (LMS Tech)

FIELD	CP-300	PLC

1
2
3
4
5
6
7
8
9
10
11
12
13
14
15

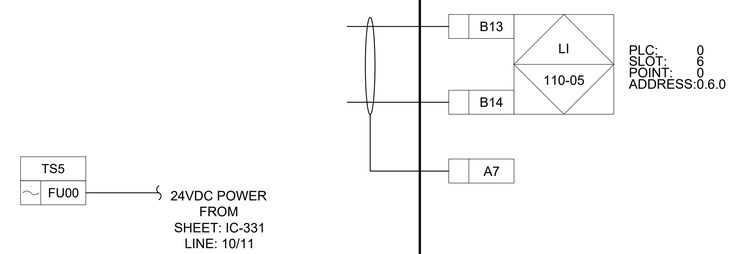

GENERAL SHEET NOTES

1. CONTRACTOR SHALL INDICATE INSTRUMENT TERMINAL BLOCK NUMBERS ON AS-BUILT DRAWINGS.
2. CP-300 SHALL BE OWNER FURNISHED CONTRACTOR INSTALLED.
3. ALL FIELD WIRING SHALL BE PROVIDED BY THE CONTRACTOR.

NO.	DATE	BY	REVISION

NOTICE
0 ½ 1
IF THIS BAR DOES NOT MEASURE 1" THEN DRAWING IS NOT TO SCALE

MB DESIGNED
JL DRAWN
BP CHECKED

REGISTERED PROFESSIONAL ENGINEER 86683 OREGON MAY 08, 2012 BENJAMIN E. PERRY
Digitally Signed
EXPIRES: 12-31-2022

WEST YOST
Water. Engineered.

Landis Consulting
ENGINEERING SERVICES
6446 Fairway Ave. SE, Suite 220
Salem, OR 97306
503-584-1576
www.landisconsulting.com

Sweet Home Oregon at its best!

MAHLER WATER RECLAMATION FACILITY IMPROVEMENTS PROJECT PHASE 1

CP-300 INSTRUMENT LOOP DIAGRAM
SLOT 6 POINT 6

PROJECT NO.: 936-50-21-09 | SCALE: AS NOTED | DATE: AUGUST 2022

SHEET
IC-346
130 of 135

DocuSign Envelope ID: 09934EE9-0C55-40A3-8631-9C0AF6797111

G:\PROJECTS\103 - West Yost Associates\1032109 - Sweet Home Wwtp Phase 1 Design\Design\(2) Drawings\Current\sweet Home Wwtp Phase 1 Design\Sheets\IC-347 CP-300 Instrument Loop Diagram Slot 6 Point 7.dwg IC-347 CP-300 Instrument Loop Diagram Slot 6 Point 7 7/28/2022 7:12 PM JLUTE 24.1s (LMS Tech)

FIELD	CP-300	PLC

1
2
3
4
5
6
7
8
9
10
11
12
13
14
15

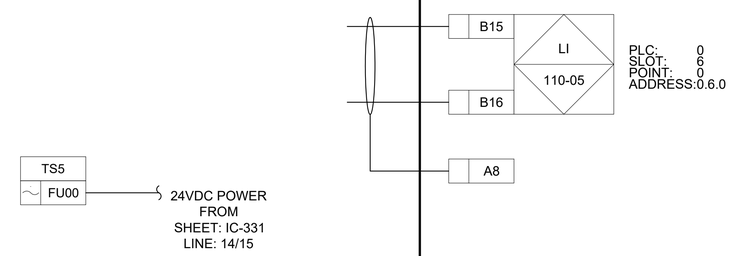

GENERAL SHEET NOTES

1. CONTRACTOR SHALL INDICATE INSTRUMENT TERMINAL BLOCK NUMBERS ON AS-BUILT DRAWINGS.
2. CP-300 SHALL BE OWNER FURNISHED CONTRACTOR INSTALLED.
3. ALL FIELD WIRING SHALL BE PROVIDED BY THE CONTRACTOR.

NO.	DATE	BY	REVISION

NOTICE
0 ½ 1
IF THIS BAR DOES NOT MEASURE 1" THEN DRAWING IS NOT TO SCALE

MB DESIGNED
JL DRAWN
BP CHECKED

REGISTERED PROFESSIONAL ENGINEER 86683 OREGON MAY 08, 2012 BENJAMIN E. PERRY
Digitally Signed
EXPIRES: 12-31-2022

WEST YOST
Water. Engineered.

Landis Consulting
ENGINEERING SERVICES
6446 Fairway Ave. SE, Suite 220
Salem, OR 97306
503-584-1576
www.landisconsulting.com

Sweet Home Oregon at its best!

MAHLER WATER RECLAMATION FACILITY IMPROVEMENTS PROJECT PHASE 1

CP-300 INSTRUMENT LOOP DIAGRAM
SLOT 6 POINT 7

PROJECT NO.: 936-50-21-09 | SCALE: AS NOTED | DATE: AUGUST 2022

SHEET
IC-347
131 of 135

DocuSign Envelope ID: 09934EE9-0C55-40A3-8631-9C0AF6797111

GENERAL INSTRUMENT SYMBOLS

LOCATION/ACCESSIBILITY	DISCRETE INSTRUMENTS	SHARED DISPLAY AND CONTROL (DCS)	PLC	DISCRETE HARDWARE INTERLOCK
FIELD MOUNTED 1. FIELD OR LOCALLY MOUNTED. 2. ACCESSIBLE TO AN OPERATOR AT DEVICE.				
PRIMARY LOCATION NORMALLY ACCESSIBLE TO AN OPERATOR 1. CENTRAL OR MAIN CONTROL ROOM. 2. FRONT OF MAIN PANEL OR CONSOLE MOUNTED. 3. VISIBLE ON VIDEO DISPLAY. 4. ACCESSIBLE TO AN OPERATOR AT DEVICE OR CONSOLE.				
PRIMARY LOCATION NORMALLY INACCESSIBLE TO AN OPERATOR 1. CENTRAL OR MAIN CONTROL ROOM. 2. REAR OF PANEL OR CABINET MOUNTED. 3. NOT VISIBLE ON VIDEO DISPLAY. 4. NOT NORMALLY ACCESSIBLE TO AN OPERATOR AT DEVICE OR CONSOLE.				
AUXILIARY LOCATION NORMALLY ACCESSIBLE TO AN OPERATOR 1. SECONDARY OR LOCAL CONTROL ROOM. 2. FIELD OR LOCAL CONTROL PANEL. 3. FRONT OF SECONDARY OR LOCAL PANEL MOUNTED. 4. VISIBLE ON VIDEO DISPLAY. 5. ACCESSIBLE TO AN OPERATOR AT DEVICE OR CONSOLE.				
AUXILIARY LOCATION NORMALLY INACCESSIBLE TO AN OPERATOR 1. SECONDARY OR LOCAL CONTROL ROOM. 2. FIELD OR LOCAL CONTROL PANEL. 3. REAR OF SECONDARY OR LOCAL PANEL OR CABINET MOUNTED. 4. NOT VISIBLE ON VIDEO DISPLAY. 5. NOT NORMALLY ACCESSIBLE TO AN OPERATOR AT DEVICE OR CONSOLE.				

ABBREVIATIONS

AG	ABOVE GROUND	MAX	MAXIMUM
ATM	ATMOSPHERE	MCC	MOTOR CONTROL CENTER
BL	BATTERY LIMIT	MCP	MAIN CONTROL PANEL
BTL	BOTTOM TANGENT LINE	MIN	MINIMUM
BYP	BYPASS	MOV	MOTOR OPERATED VALVE
CC	CHEMICAL CLEANOUT	MW	MANWAY
CL	CENTERLINE	NC	NORMALLY CLOSED
CO	CLEANOUT	NNF	NORMALLY NO FLOW
CONN	CONNECTION	NO	NORMALLY OPEN
CSC	CAR SEAL CLOSED	NOZ	NOZZLE
CSO	CAR SEAL OPEN	O/C	OPEN/CLOSE
CTR	CENTER	O/O	ON/OFF
DCS	DISTRIBUTED CONTROL SYSTEM	OIT	OPERATOR INTERFACE TERMINAL
DES	DESIGN	OP	OUTPUT
DIA	DIAMETER	OSBL	OUTSIDE BATTERY LIMITS
DP	DESIGN PRESSURE	OVHD	OVERHEAD
D/P	DIFFERENTIAL PRESSURE	PLC	PROGRAMMABLE LOGIC CONTROLLER
DRN	DRAIN	PRESS	PRESSURE
DT	DESIGN TEMPERATURE	PV	PROCESS VARIABLE
DWG	DRAWING	(R)	RELOCATED
(E)	EXISTING	REQD	REQUIRED
EL	ELEVATION	RIO	REMOTE IO PANEL
ESD	EMERGENCY SHUTDOWN	RTD	RESISTANCE TEMPERATURE DETECTOR
FOF	FACE OF FLANGE	SC	SAMPLE CONNECTION
(F)	FURNISHED	SCH	SCHEDULE
FC	FAIL CLOSED	SD	SHUTDOWN
FI	FAIL INDETERMINATE	SG	SPECIFIC GRAVITY
FL	FAIL LOCKED (LAST POSITION)	SIS	SAFETY INSTRUMENTED SYSTEM
FLG	FLANGE	SO	STEAM OUT
FO	FAIL OPEN	SP	SET POINT
FP	FULL PORT	SS	STAINLESS STEEL S/S START/STOP
FV	FULL VACUUM	STD	STANDARD
GO	GEAR OPERATED	T/C	THERMOCOUPLE
GR	GRADE	TDH	TOTAL DIFFERENTIAL HEAD
HC	HOSE CONNECTION	TEMP	TEMPERATURE
HDR	HEADER	THRD	THREADED
HH	HAND HOLE	TYP	TYPICAL
HOA	HAND/OFF/AUTOMATIC	UG	UNDERGROUND
HP	HIGH PRESSURE	UV	ULTRAVIOLET
HPT	HIGH POINT	UVT	ULTRAVIOLET TRANSMITTANCE
IAS	INSTRUMENT AIR SUPPLY	UVI	ULTRAVIOLET INTENSITY
ISBL	INSIDE BATTERY LIMITS	VNT	VENT
LC	LOCKED CLOSED	VAC	VACUUM
LCP	LOCAL CONTROL PANEL	VB	VORTEX BREAKER
LO	LOCKED OPEN	VFD	VARIABLE FREQUENCY DRIVE
LP	LOW PRESSURE	W/	WITH
LPT	LOW POINT	W/O	WITHOUT
MTL	MATERIAL		

INSTRUMENT IDENTIFICATION LETTERS

	FIRST LETTER		SUCCEEDING LETTERS		
	MEASURED OR INITIATING VARIABLE	MODIFIER	READOUT OR PASSIVE FUNCTION	OUTPUT FUNCTION	MODIFIER
A	ANALYSIS		ALARM		
B	BURNER, FLAME, COMBUSTION		USER'S CHOICE	USER'S CHOICE	USER'S CHOICE
C	USER'S CHOICE (TYPICALLY CONDUCTIVITY - ELECTRICAL)			CONTROL, COMMAND	CLOSED
D	USER'S CHOICE (TYPICALLY DENSITY OR SPECIFIC GRAVITY)	DIFFERENTIAL			DIVERT
E	VOLTAGE		SENSOR (PRIMARY ELEMENT)		
F	FLOW RATE	RATIO (FRACTION)			
G	USER'S CHOICE OR GAUGING (DIMENSIONAL)		GLASS, VIEWING DEVICE		
H	HAND				HIGH
I	CURRENT (ELECTRICAL)		INDICATE		
J	POWER	SCAN			
K	TIME, TIME SCHEDULE	TIME RATE OF CHANGE		CONTROL STATION	
L	LEVEL		LIGHT		LOW
M	USER'S CHOICE (TYPICALLY MOISTURE OR HUMIDITY)	MOMENTARY			MIDDLE, INTERMEDIATE
N	USER'S CHOICE		USER'S CHOICE	USER'S CHOICE	USER'S CHOICE
O	USER'S CHOICE		ORIFICE, RESTRICTION		OPEN
P	PRESSURE, VACUUM		POINT (TEST) CONNECTION		
Q	QUANTITY OR HEAT DUTY	INTEGRATE, TOTALIZE			
R	RADIATION		RECORD		
S	SPEED, FREQUENCY	SAFETY		SWITCH	
T	TEMPERATURE			TRANSMIT	THROUGH
U	MULTIVARIABLE		MULTIFUNCTION	MULTIFUNCTION	MULTIFUNCTION
V	VIBRATION, MECHANICAL ANALYSIS			VALVE, DAMPER, LOUVER	
W	WEIGHT, FORCE, TORQUE		WELL		
X	UNCLASSIFIED	X AXIS	UNCLASSIFIED	UNCLASSIFIED	UNCLASSIFIED
Y	EVENT, STATE OR PRESENCE	Y AXIS		RELAY, COMPUTE, CONVERT	
Z	POSITION, DIMENSION	Z AXIS		DRIVER, ACTUATOR, UNCLASSIFIED FINAL CONTROL ELEMENT	

TYPICAL INSTRUMENT TAG NUMBERS & DESIGNATION

HS ID HOA 1A

- INSTRUMENT TYPE SEE 'INSTRUMENT IDENTIFICATION LETTERS'
- ADDITIONAL INSTRUMENT IDENTIFICATION SEE 'HAND SWITCH ABBREVIATIONS'
- INSTRUMENT IDENTIFICATION (FIRST TWO DIGITS DENOTE ASSOCIATED AREA)
- WHEN USED, LETTER DISTINGUISHES BETWEEN MULTIPLE SIMILAR DEVICES
- USED WHEN MULTIPLE TRAINS ARE USED AND REPRESENTS THE TRAIN NUMBER

HAND SWITCH ABBREVIATIONS

AO = AUTO/OFF
AM = AUTO/MANUAL
CM = COMPUTER/MANUAL
CL = COMPUTER LOCAL
ES = EMERGENCY STOP
FR = FORWARD/REVERSE
FOR = FORWARD/OFF/REVERSE
FS = FAST/SLOW
FOS = FAST/OFF/SLOW
HOA = HAND/OFF/AUTOMATIC
LLS = LEAD/LAG/STANDBY
LOC = LOCAL/OFF/COMPUTER
LOR = LOCAL/OFF/REMOTE
LOS = LOCKOUT/STOP
LA = LOCAL/AUTO
LR = LOCAL/REMOTE
OC = OPEN/CLOSE
OCA = OPEN/CLOSE/AUTO
OO = ON/OFF
OOA = ON/OFF/AUTO
OSC = OPEN/STOP/CLOSE
RES = RESET
RSL = RAISE/STOP/LOWER
SS = START/STOP
SOR = START/OFF/RESET
V/B = VFD/BYPASS

PIPING LINE SYMBOLS

PRIMARY (AG & UG)
SECONDARY / UTILITY (AG & UG)
FUTURE OR EXISTING ON NEW P&IDs
JACKETED OR DOUBLE CONTAINMENT

INSTRUMENT LINE SYMBOLS

INSTRUMENT SUPPLY OR CONNECTION TO PROCESS
PNEUMATIC SIGNAL
ELECTRIC SIGNAL (ANALOG)
ELECTRIC SIGNAL (DISCRETE)
HYDRAULIC SIGNAL
CAPILLARY TUBE
ELECTROMAGNETIC, SONIC, OPTICAL, OR NUCLEAR SIGNAL
SOFTWARE OR DATA LINK
MECHANICAL LINK

FLOW STREAM IDENTIFIERS

CS = COMBINED SLUDGE
CAS = CAUSTIC SODA
DG = DIGESTER GAS
DR = DRAIN
DS = DIGESTER SOLIDS
FA = FOUL AIR
FBW = FILTER BACKWASH
FE = FINAL EFFLUENT
GR = GRIT
HW = HOT WATER
ML = MIXED LIQUOR
PA = PROCESS AIR
PDR = PLANT DRAIN
PE = PRIMARY EFFLUENT
PI = PRIMARY INFLUENT
POL = POLYMER
PS = PRIMARY SLUDGE
RAS = RETURN ACTIVATED SLUDGE
RS = RAW SEWAGE
SCM = SCUM
SCRN = SCREENINGS
SE = SECONDARY EFFLUENT
TE = TERTIARY EFFLUENT
TWAS = THICKENED WASTE ACTIVATED SLUDGE
UW = UTILITY WATER
WAS = WASTE ACTIVATED SLUDGE

TYPICAL EQUIPMENT TAG NUMBERS & DESIGNATION

BLO-110-01

- UNIQUE IDENTIFIER
- EQUIPMENT AREA
- EQUIPMENT TYPE (SEE CHART ABOVE)

AER = AERATOR
BIN = BIN
BLO = BLOWER
CEL = CELL
CLA = CLARIFIER
CLS = CLASSIFIER
CND = CONDENSATE TRAP
CON = CONVEYOR
DIF = DIFFUSER
DIG = DIGESTER
DIS = DISINFECTION UNIT
FED = FEEDER
FLT = FILTER
HEX = HEAT EXCHANGER
MIX = MIXER
PMP = PUMP
PRS = PRESS
SCN = SCREEN
SMP = SUMP
THK = THICKENER
TNK = TANK
WEL = WET WELL

PIPELINE IDENTIFICATION DESCRIPTION

DD"-PPP-MTL

- PIPE SIZE - INCHES UNLESS OTHERWISE NOTED
- PROCESS CODE - DENOTES ASSOCIATED PROCESS STREAM
- MATERIAL CODE - DENOTES ASSOCIATED MATERIAL ABBREVIATION

OFF-PAGE CONNECTORS AND TIE-IN SYMBOL

A. OFF-PLOT CONNECTOR

CONNECTOR NUMBER — SERVICE DESCRIPTION | XX | P&ID No | ORIGIN/DESTINATION

B. PRIMARY/SECONDARY LINES AND INSTRUMENT SIGNAL CONNECTOR

CONNECTOR NUMBER — SERVICE DESCRIPTION | XX | P&ID No | ORIGIN /DESTINATION

C. UTILITY CONNECTOR

CONNECTOR NUMBER — XX | P&ID No

D. TIE-IN SYMBOL

TIE-IN NUMBER — T XXX

INPUT / OUTPUT SIGNALS

MEASURED VARIABLE OR OUTPUT FUNCTION FROM 'INSTRUMENT IDENTIFICATION LETTERS' TABLE

ANALOG INPUT (AI)
ANALOG OUTPUT (AO)
DISCRETE INPUT (DI)
DISCRETE OUTPUT (DO)

DRAIN CONNECTORS

CLOSED DRAIN

CONNECTOR NUMBER — XXXX
DESTINATION LINE — YYY
SERVICE CODE P&ID#

OPEN DRAIN

CONNECTOR NUMBER — XXXX
DESTINATION LINE — YYY
SERVICE CODE P&ID#

CLOSED DRAIN (NO P&ID)

DESTINATION LINE — YYY
SERVICE CODE

OPEN DRAIN (NO P&ID)

DESTINATION LINE — YYY
SERVICE CODE

NO.	DATE	BY	REVISION

NOTICE
0 ½ 1
IF THIS BAR DOES NOT MEASURE 1" THEN DRAWING IS NOT TO SCALE

NED DESIGNED
AT DRAWN
WJS CHECKED

REGISTERED PROFESSIONAL ENGINEER
DocuSigned by:
51615PE
4B04F76859FC46F...
8/2/2022 OREGON
JAN. 02, 1999
PRESTON VAN METER
EXPIRES : 6/30/2024

WEST YOST Water. Engineered.

Sweet Home Oregon at its best!

MAHLER WATER RECLAMATION FACILITY IMPROVEMENTS PROJECT PHASE 1

LEGENDS, SYMBOLS AND ABBREVIATIONS 1

PROJECT NO.: 936-50-21-09 | SCALE: AS SHOWN | DATE: August 2022

SHEET
I-001
132 of 135

C:\Users\aaron\AppData\Local\Autodesk\AutoCAD Plant 3D\CollaborationCache\SweetHome-P3D\PID DWG\Legend\I-001.dwg I-001 7/29/2022 2:12 PM AARON 24.1s (LMS Tech)

DocuSign Envelope ID: 09934EE9-0C55-40A3-8631-9C0AF6797111

PRIMARY ELEMENT SYMBOLS

- XX — GENERAL SYMBOL IN-LINE ELEMENT XX = FS, FG, FE, FT
- FT XXXX — IN-LINE FLOW ELEMENT WITH INTEGRAL TRANSMITTER XXXX = MASS, CORIOLIS, THERMAL, INT. ORIFICE ...
- FT FE XXXX — IN-LINE FLOW ELEMENT WITH SEPARATE TRANSMITTER XXXX = MASS, CORIOLIS, THERMAL...
- ORIFICE
- M — MAGNETIC
- TURBINE OR PROPELLER
- ULTRASONIC
- VORTEX
- PITOT TUBE
- AVERAGING PITOT TUBE
- FLOW NOZZLE
- VENTURI
- WEDGE METER
- LE — RADAR (NON-CONTACT)
- LE — ULTRASONIC LEVEL SENSOR
- LE — ULTRASONIC LEVEL SENSOR (GUIDED)
- LS* — FLOAT SWITCH FLOAT SWITCH * = L/LL/H/HH
- FS* — FLOW SWITCH * = H/L
- FG — FLOW GLASS
- FLOW CONDITIONING DEVICES (e.g., STRAIGHTENING VANES)
- FO — RESTRICTION ORIFICE
- AE X — ANALYZER ELEMENT X INDICATES TYPE
  pH = HYDROGEN POTENTIAL
  DO = DISSOLVED OXYGEN
  H2S = HYDROGEN SULFIDE
  LEL = LOWER EXPLOSIVE LIMIT
  O2 = OXYGEN
  ORP = OXYGEN REDUCTION POTENTIAL
- ROTAMETER
- FI — ROTAMETER WITH INTEGRAL VALVE (SHOWN WITH OPTIONAL INTEGRAL VALVE)
- FLUME
- WEIR
- POSITIVE DISPLACEMENT
- ORIFICE IN QUICK CHANGE FITTING
- TARGET

PROCESS EQUIPMENT

- HORIZONTAL CENTRIFUGAL PUMP
- VERTICAL INLINE PUMP
- SUBMERSIBLE PUMP
- PROPELLER PUMP
- PROGRESSIVE CAVITY PUMP
- POSITIVE DISPLACEMENT PUMP
- LIQUID RING VACUUM PUMP
- VERTICAL CAN PUMP
- SCREW PUMP
- POSITIVE DISPLACEMENT BLOWER
- CENTRIFUGAL BLOWER
- CENTRIFUGAL COMPRESSOR
- RECIPROCATING COMPRESSOR
- SCREW COMPRESSOR
- DOME ROOF TANK
- CLOSED TOP TANK
- OPEN TOP TANK / WET WELL/ CHANNEL
- CLARIFIER
- GRIT CLASSIFIER
- WASH PRESS
- MULTI-RAKE
- MANUAL BAR SCREEN
- SUBMERSIBLE MIXER
- GRIT CHAMBER
- CLOTH FILTER
- DRAFT TUBE PUMP
- SCREW CONVEYOR
- FLOCCULATION TANK
- OUTFALL DIFFUSER
- ROTARY SCREEN THICKENER
- AERATION DIFFUSER
- SPIRAL HEAT EXCHANGER
- SCREW PRESS

VALVE SYMBOLS (N.C. WHEN SHADED)

- GATE VALVE
- CHECK VALVE
- STOP CHECK VALVE
- GLOBE VALVE
- BUTTERFLY VALVE
- NEEDLE VALVE
- BALL VALVE
- BALANCING VALVE
- PLUG VALVE
- DIAPHRAGM VALVE
- 3-WAY VALVE
- 4-WAY VALVE
- PINCH VALVE
- ANGLE VALVE
- KNIFE VALVE
- SLUICE OR SLIDE GATE

PIPING FITTINGS

- FLANGE
- WELDED CONNECTION
- CAP
- CONCENTRIC REDUCER
- ECCENTRIC REDUCER
- HOSE CONNECTION
- SPACER
- BLANK
- OPEN FIGURE 8 BLIND
- CLOSED FIGURE 8 BLIND
- PLUG
- BLIND FLANGE

PIPING SPECIALTY ITEMS

- Y-TYPE STRAINER
- CONE STRAINER
- T-TYPE STRAINER
- DUPLEX STRAINER
- BASKET STRAINER
- TEMPORARY STRAINER
- FILTER
- D — DETONATION ARRESTOR
- F — FLAME ARRESTOR
- T — STEAM TRAP
- EXHAUST HEAD
- S — IN-LINE SILENCER
- S — VENT SILENCER
- MECHANICAL COUPLING
- EJECTOR
- RS — REMOVABLE SPOOL
- DS — DESUPERHEATER
- FLEXIBLE HOSE
- EXPANSION JOINT
- DAMPER
- BREATHER
- VENT COVER
- IN-LINE MIXER
- DIVERTER VALVE
- ROTARY VALVE
- EXCESS FLOW VALVE
- PULSATION DAMPENER
- PI — PRESSURE INDICATOR

CONTROL VALVE ACTUATOR SYMBOLS

- MANUAL OPERATOR
- DIAPHRAGM
- PRESSURE BALANCED DIAPHRAGM
- HANDWHEEL WITH ACTUATOR
- CYLINDER - PISTON
- M — MOTOR OPERATED - CONSTANT SPEED
- E/H — ELECTRO-HYDRAULIC
- S — SINGLE SOLENOID
- S R — SINGLE SOLENOID - MANUAL RESET
- S R — SINGLE SOLENOID - REMOTE RESET

MISCELLANEOUS INSTRUMENT SYMBOLS

- CHEMICAL SEAL- DIAPHRAGM
- ANNULAR SEAL
- PILOT LIGHT OR GAUGE GLASS ILLUMINATOR X INDICATES COLOR
  R = RED B = BLUE G = GREEN
  A = AMBER W = WHITE
- DUAL FUNCTION OR INSTRUMENTS SHARING COMMON HOUSING
- I — UNDEFINED INTERLOCK LOGIC

SELF-ACTUATED DEVICES

- RUPTURE DISC - PRESSURE RELIEF SAFETY HEAD FOR PRESSURE RELIEF (EXPLOSION PANEL)
- RUPTURE DISC - VACUUM RELIEF SAFETY HEAD FOR VACUUM RELIEF (EXPLOSION PANEL)
- PRESSURE RELIEF - SAFETY VALVE
- VACUUM RELIEF VALVE
- PRESSURE AND VACUUM RELIEF VALVE CONSERVATION VENT
- P — PILOT OPERATED RELIEF VALVE WITH REMOTE SENSOR (USE APPROPRIATE RELIEF VALVE SYMBOL)
- PRESSURE REDUCING REGULATOR (SELF-CONTAINED)
- BACK PRESSURE REGULATOR (SELF-CONTAINED)
- BACK PRESSURE REGULATOR W/ EXTERNAL TAP
- PRESSURE REDUCING REGULATOR W/ EXTERNAL TAP
- DIFFERENTIAL PRESSURE REDUCING REGULATOR
- TEMPERATURE REGULATOR FILLED SYSTEM TYPE

NO.	DATE	BY	REVISION

NOTICE
0 ½ 1
IF THIS BAR DOES NOT MEASURE 1" THEN DRAWING IS NOT TO SCALE

NED DESIGNED
AT DRAWN
WJS CHECKED

REGISTERED PROFESSIONAL ENGINEER — OREGON — 8/2/2022 — JAN. 02, 1999 — PRESTON VAN METER
EXPIRES : 6/30/2024

WEST YOST
Water. Engineered.

Sweet Home Oregon at its best!

MAHLER WATER RECLAMATION FACILITY IMPROVEMENTS PROJECT PHASE 1

LEGENDS, SYMBOLS AND ABBREVIATIONS 2

PROJECT NO.: 936-50-21-09 | SCALE: AS SHOWN | DATE: August 2022

SHEET I-002

C:\Users\aaron\AppData\Local\Autodesk\AutoCAD Plant 3D\CollaborationCache\SweetHome-P3D\PID DWG\Legend\I-002.dwg I-002 7/29/2022 2:14 PM AARON 24.1s (LMS Tech)

DocuSign Envelope ID: 09934EE9-0C55-40A3-8631-9C0AF6797111

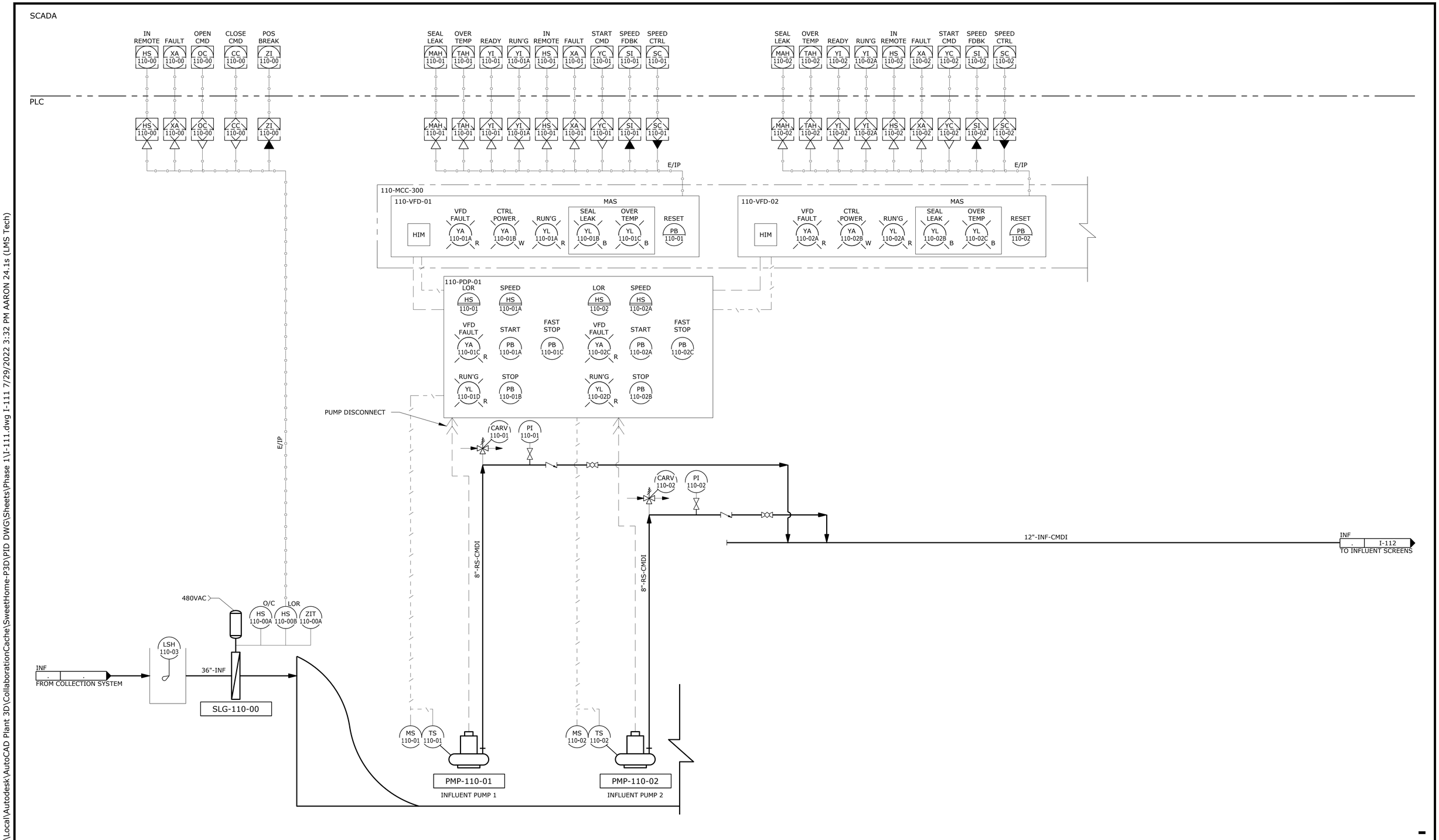

NO.	DATE	BY	REVISION

NOTICE
0 ½ 1
IF THIS BAR DOES NOT MEASURE 1" THEN DRAWING IS NOT TO SCALE

NED
DESIGNED
AT
DRAWN
WJS
CHECKED

REGISTERED PROFESSIONAL ENGINEER
OREGON
PRESTON VAN METER
EXPIRES : 6/30/2024

WEST YOST
Water. Engineered.

Sweet Home
Oregon at its best!

MAHLER WATER RECLAMATION FACILITY IMPROVEMENTS PROJECT PHASE 1

INFLUENT PUMP STATION 1

PROJECT NO.: 936-50-21-09 | SCALE: AS SHOWN | DATE: August 2022

SHEET
I-111
134 of 135

C:\Users\aaron\AppData\Local\Autodesk\AutoCAD Plant 3D\CollaborationCache\SweetHome-P3D\PID DWG\Sheets\Phase 1\I-111.dwg I-111 7/29/2022 3:32 PM AARON 24.1s (LMS Tech)

DocuSign Envelope ID: 09934EE9-0C55-40A3-8631-9C0AF6797111

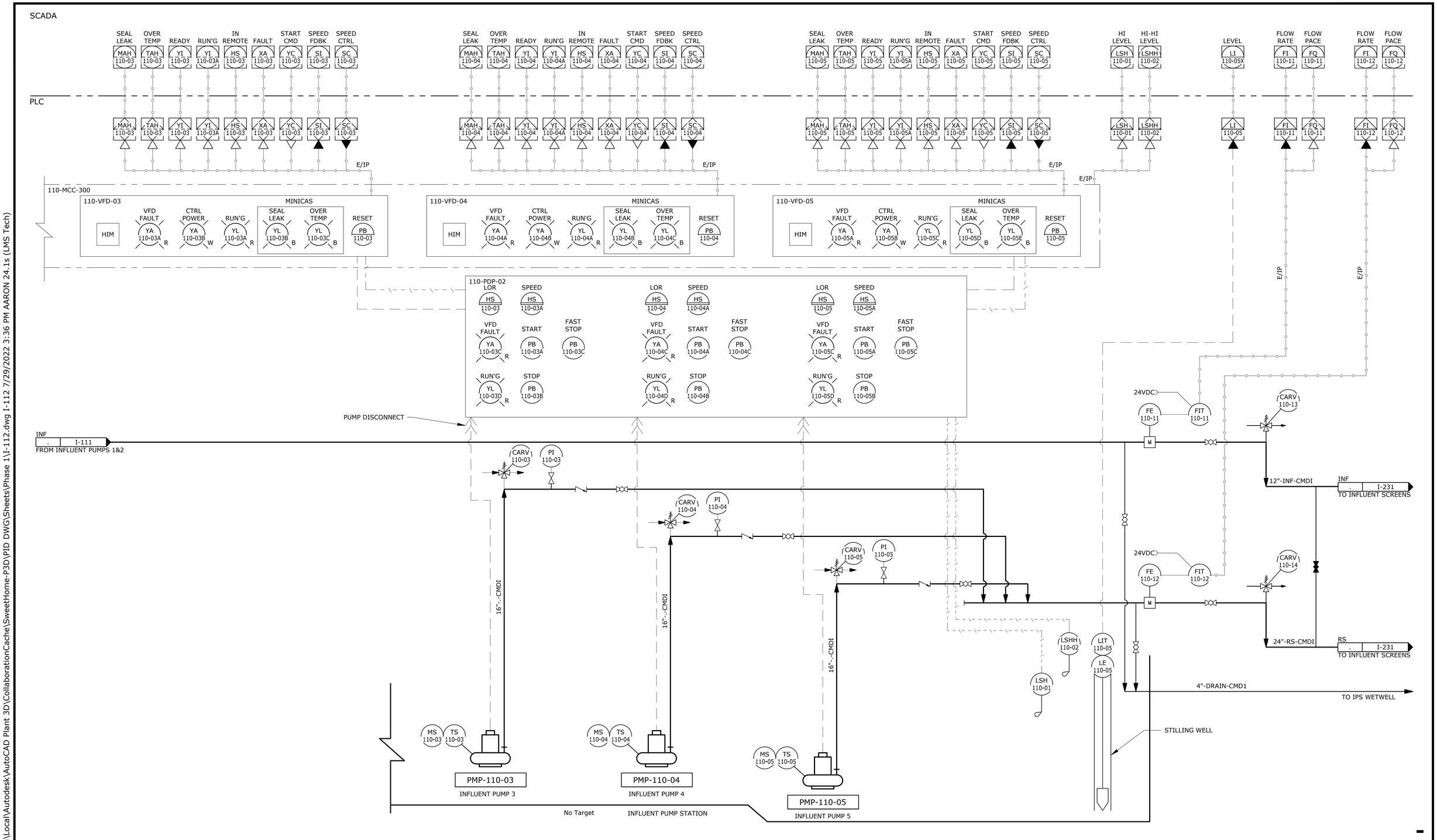

NO.	DATE	BY	REVISION

NOTICE

0 ½ 1

IF THIS BAR DOES NOT MEASURE 1" THEN DRAWING IS NOT TO SCALE

NED
DESIGNED
AT
DRAWN
WJS
CHECKED

REGISTERED PROFESSIONAL ENGINEER
51615PE
OREGON
JAN. 02, 1999
PRESTON VAN METER
EXPIRES : 6/30/2024

WEST YOST
Water. Engineered.

Sweet Home
Oregon at its best!

MAHLER WATER RECLAMATION FACILITY IMPROVEMENTS PROJECT PHASE 1

INFLUENT PUMP STATION 2

PROJECT NO.: 936-50-21-09 | SCALE: AS SHOWN | DATE: August 2022

SHEET
I-112
135 of 135

C:\Users\aaron\AppData\Local\Autodesk\AutoCAD Plant 3D\CollaborationCache\SweetHome-P3D\PID DWG\Sheets\Phase 1\I-112.dwg I-112 7/29/2022 3:36 PM AARON 24.1s (LMS Tech)

CITY OF SWEET HOME

CONTRACT DOCUMENTS

FOR

MAHLER WATER RECLAMATION FACILITY IMPROVEMENTS PROJECT PHASE 1

SUPPLEMENTAL INFORMATION

GEOTECHNICAL DATA REPORT

AUGUST 2022

(THIS PAGE LEFT BLANK INTENTIONALLY)

City of Sweet Home
Mahler Water Reclamation Facility Improvements

Geotechnical Data Report

Final Submittal

Prepared for

July 2022

This page intentionally left blank.

Table of Contents

1.0 Introduction 1
1.1 General 1
1.2 Project Description 1
1.3 Purpose and Scope of Work 3
2.0 Site Conditions 4
2.1 Site Description 4
2.2 Regional Geology 4
3.0 Site Investigations 5
3.1 General 5
3.2 Exploratory Borings 5
3.3 Piezometers 6
3.4 Borehole Backfill and Abandonment 6
4.0 Laboratory Testing 7
5.0 Subsurface Conditions 9
5.2 Groundwater 12
6.0 Limitations 13
7.0 References 14

List of Tables

Table 4-1. Laboratory Test Results Summary 8
Table 5-1. Definition of Rock Strength Descriptions 10
Table 5-2. Depth of Fill / Depth to Rock Summary 11
Table 5-3. Groundwater Level Measurements 12

List of Figures

Figure 1 Vicinity Map
Figure 2 Site Plan
Figure 3A Geologic Cross Section – Building A
Figure 3B Geologic Cross Section – MEB Building
Figure 3C Geologic Cross Section – Aeration Basin No. 3

Figure 3D Geologic Cross Section – Primary Clarifier
Figure 3E Geologic Cross Section – Secondary Clarifier 90 (SC90)
Figure 3F Geologic Cross Section – Influent Pump Station

Appendices

Appendix A Boring Logs
Appendix B Rock Core Photos
Appendix C Laboratory Test Results

Acronyms and Abbreviations

ASTM	American Society for Testing and Materials
bgs	below ground surface
bpf	blows per foot
GDR	Geotechnical Data Report
$I_{S(50)}$	point load index
LBVS	Little Butte Volcanic Series
MJA	McMillen Jacobs Associates
N-value	standard penetration test blows to advance final foot
OAR	Oregon Administrative Rules
PGA	peak ground acceleration
RQD	Rock Quality Designation
SPT	Standard Penetration Test
USGS	United States Geological Survey
West Yost	West Yost Associates, Inc.
WRF	Wastewater Reclamation Facility

Distribution

To: Preston Van Meter, P.E.
West Yost Associates, Inc.

From: Wolfe Lang, P.E., G.E.
McMillen Jacobs Associates

Prepared By: Jeff Quinn, P.E.
McMillen Jacobs Associates

Reviewed By: Wolfe Lang, P.E., G.E.
McMillen Jacobs Associates

Revision Log

Revision No.	Date	Revision Description
Final Submittal	July 22, 2022	Final Submittal to West Yost

1.0 Introduction

1.1 General

McMillen Jacobs Associates (MJA) has been retained by West Yost Associates, Inc. (West Yost) to provide geotechnical engineering services for the City of Sweet Home Mahler Water Reclamation Facility Improvements project. The project owner is the City of Sweet Home. The Project site location is shown in the Vicinity Map, Figure 1. This Geotechnical Data Report (GDR) presents the results of our field explorations and laboratory testing, as well as a discussion on the site geology.

1.2 Project Description

The City of Sweet Home Mahler Water Reclamation Facility (WRF) is located at 1357 Pleasant Valley Road, in Sweet Home, Oregon. The WRF has been in service since 1947 with two major upgrades completed in 1974 and 1994 (Brown & Caldwell, 2016). Our project understanding is based on our communication with West Yost and the 90 percent submittal plans entitled *Mahler Water Reclamation Facility Improvements Project – Phase 1*, dated June 2022, prepared by West Yost. This GDR addresses both the Phase 1 and Phase 2 project improvements. However, Phase 2 of the project is only in the preliminary design stages and several details are still being worked out by West Yost. The proposed Phase 1 and Phase 2 improvements are shown in Figure 2.

1.2.1 Phase 1 WRF Improvements

The proposed Phase 1 WRF improvements will include the following:

- *Main Electrical and Blower (MEB) Building*: The 22- by 67.5-foot MEB Building will be located within the north-central part of the WRF site. The interior of the building will be supported on a 6-inch-thick slab on grade foundation, while the perimeter of the structure will be supported on a 1.5-foot-wide continuous spread footing. A new generator, which will be installed on the north side of the MEB Building, will be supported on 12- by 28-foot, 12-inch-thick reinforced concrete slab on grade with thickened edges. Site grades will be raised up to approximately 6 feet in this area to facilitate construction of the MEB Building, with approximately 4 to 6 feet of fill placed below the building footprint. The approximately 6-foot-tall fill slope on the east side of the MEB Building will descend at 2H:1V (horizontal:vertical).
- *Influent Pump Station (IPS)*: The new, 40- by 56-foot IPS will be constructed just north of the existing IPS, within the southeast corner of the WRF site. The approximate southern half of the IPS structure, which supports above-grade piping, will be supported on a 12-inch-thick reinforced concrete slab on grade with thickened edges. The approximate northern half of the IPS structure, which houses five submerged pumps, will be supported on a 28-inch-thick reinforced concrete slab with a base elevation of approximately 491.2 feet (e.g., about 26.2 feet below grade).
- *Temporary Generator*: A temporary electrical generator, supported on an 18-inch-thick reinforced concrete slab, will be installed on the south side of existing Secondary Clarifier SC60.

- *Existing Bathroom Relocation*: The existing bathroom, currently along the northern fence line and east of the existing entrance gate, will be moved to the north side of the boat ramp access road.
- *Retaining Walls*: To support new fills placed for site grading, as well as proposed cuts, there are six retaining walls (designated Wall 1 through Wall 6) proposed as part of Phase 1 improvements. The retaining walls will be cast-in-place, reinforced concrete cantilevered walls ranging in height from 2.5 to 6.75 feet.
- *Existing Structures/Facilities to Remain In Use*: Secondary Clarifier Nos. 1 through 3; RAS/WAS Pump Station; Aeration Basin; Chlorine Contact Chamber; Aerobic Digestor; Administration and Operations Building; Solids Building; Sand Filters; Lime Silo; and the electrical building on the south side of existing SC60.
- *Proposed Piping Improvements*: 12-inch storm drain;10-inch storm drain; 8-inch to 36-inch sanitary sewer; 12-inch IPS forcemain to headworks (HDPE pipe); 24-inch RS IPS to Headworks (HDPE pipe); 6-inch PS forcemain; 12-inch RDPS; 6-inch SL-WAS; 6-inch SL-D forcemain; 4-inch PSC; and 10-inch DIP waterline relocation.
- *Demolition of the Following Existing Structures*: Backwash Storage; Waste Backwash Storage; the approximately 25- by 50-foot storage building on the west side of the WRF site; and several buildings clustered together in the central portion of the WRF site including the carport, an approximately 40- by 40-foot CMU building, an approximately 25- by 50-foot Quonset Hut storage building, and an approximately 15- by 35-foot shed.
- *Other Improvements*: The existing asphalt pavement and concrete curbs along the main entrance road and within the approximate western half of the site. The approximate western half of the WRF site, an area north of the boat ramp access drive, and a narrow area along the south site boundary will be surfaced with gravel as part of the Phase 1 improvements.

1.2.2 Phase 2 WRF Improvements

Although Phase 2 plans are not available as of the time of report issuance, West Yost provided us with preliminary information, the details of which are provided in the following:

- *Primary Clarifier*: The new primary clarifier will consist of an approximately 65- by 85-foot reinforced concrete tank structure. The base depth of the new primary clarifier will be approximately 9.5 to 22.5 feet below existing site grades and will be supported on an 18-inch-thick, reinforced concrete mat foundation system. The primary clarifier will be expanded to the north (designated Primary Clarifier 4) in a future project phase.
- *Secondary Clarifier 90 (SC90)*: SC90 will consist of an approximately 95-foot diameter, 17-foot-tall reinforced concrete tank structure. SC90 will be a primarily below-grade structure, with the tank walls being about 2 feet above finish grade. The base depth of the SC90 will be approximately 15 feet below existing site grades and will be supported on a reinforced concrete mat foundation.
- *Building A (O&M and Controls)*: This 40- by 120-foot building, oriented northeast-southwest, will be constructed at the west end of the WRF site and will be an at-grade structure supported on an interior slab-on-grade. The perimeter of the structure and interior load-bearing walls will be supported on shallow spread footings.

- *Building A (Headworks and Dewatering)*: This 40- by 120-foot building, oriented southeast-northwest, will abut the southeast corner of the O&M and Controls building to form the leg of the L-shaped Building A. This will be an at-grade structure supported on an interior slab-on-grade. The perimeter of the structure and interior load-bearing walls will be supported on shallow spread footings.
- *SC90 WAS and RAS Pump Stations*: Each of these two pump stations will be an approximately 10-foot diameter reinforced concrete vault structure with a base depth of approximately 16.5 feet below existing site grades and will be supported on a reinforced concrete mat foundation.
- *Existing Secondary Clarifier SC60 RAS/WAS Pump Station*: This pump station will be an approximately 10- by 20-foot reinforced concrete vault structure with a base depth of approximately 12.5 feet below existing site grades and will be supported on a reinforced concrete mat foundation.
- *Aeration Basin No. 3*: Aeration Basin No. 3 will consist of an approximately 40- by 75-foot reinforced concrete structure. The base depth of Aeration Basin No. 3 will be approximately 13 to 18 feet below existing site grades and will be supported on a reinforced concrete mat foundation. Aeration Basin No. 3 will be expanded to the north (designated Aeration Basin No. 4) in a future project phase and will likely be founded at the same depth as Aeration Basin No. 3.
- *Tertiary Filters*: The tertiary filters will be housed in an approximately 25- by 35-foot reinforced concrete tank structure. The base depth of Aeration Basin No. 3 will be approximately 18 feet below existing site grades and will be supported on a reinforced concrete mat foundation.
- *Tertiary Building, UV Disinfection, and UW Storage*: These facilities will be located adjacent to one another within an approximate 35- by 40-foot area. The UW Storage and UV Storage facilities will be constructed within the existing chlorine contact chamber. The portion of the Tertiary Building housing the utility water pumps will likely be approximately 7 feet below existing site grades.
- *Outfall*: The outfall pipe leads from the UV disinfection chamber to the South Santiam River. This will either be part of the Phase 2 improvements or in a future project phase.
- *Other Improvements*: New asphalt pavements along the entrance road from Pleasant Valley Road and withing most of the WRF site; new concrete curbs and sidewalks; two new entrance gates; and a new chain-link fence.

1.3 Purpose and Scope of Work

The primary purpose of this GDR is to compile sufficient geologic and geotechnical data at the project site to support the design and construction of the proposed improvements. This GDR presents a summary of geologic and geotechnical data collected from field explorations and testing, laboratory testing, a review of published geological sources, and other historical geotechnical information related to the project. Information contained in this GDR will be used to characterize subsurface conditions at the site and to develop recommendations for design and construction of the Project.

2.0 Site Conditions

2.1 Site Description

The existing WRF site is located on the south bank of the South Santiam River near its confluence with Ames Creek. The site is bordered by the Albany and Eastern railroad tracks to the south, a boat ramp access road and the South Santiam River beyond, private property to the west, and Ames Creek to the east. In general, the site slopes gently from the west to the east (i.e., towards Ames Creek) and gently from the south to the north towards the South Santiam River. The eastern two-thirds of the site, where most of the WRF is located, is situated on a relatively level terrace that generally sits 5 to 7 feet lower than the western one-third of the site and approximately 10 feet above Ames Creek to the east.

A paved access road runs along the north side of the site, from the Pleasant Valley Road WRF entrance at the west end of the site to the boat ramp and recreation use area at the north-northeast end of the site that provides public access to the South Santiam River. The paved WRF road, heading south from the access road from the main entrance gate, provides access to the main areas within the WRF. Bedrock is exposed along the South Santiam River and Ames Creek approximately 100 feet to the north-northeast of the site. Exposed bedrock on the riverbank slopes steeply into the river.

2.2 Regional Geology

The project site is located in the foothills of the Western Cascades, a north-south trending physiographic region that stretches from northern California to British Columbia, tucked between the Willamette Valley to the west and the younger High Cascades to the east. The Western Cascades in Oregon were formed by a series of volcanic events from approximately 35 to 17 million years ago. The region is marked by densely forested hills dissected by the region's many rivers (Madin, 1990; Schlicker and Deacon, 1967; Wilson, 1998; Popowski, 1996).

The Paleogene structural basement of this region of the Western Cascades is composed of non-marine volcaniclastic sedimentary rocks, tuff, basaltic andesite, andesite, and dacite of the Late Eocene to Oligocene Fisher Formation. The Fisher Formation is overlain by basalt lavas, ash-flow tuff, tuff, and non-marine sedimentary rocks of the Little Butte Volcanic Series. A subducting plate below the Eocene shoreline resulted in a volcanic chain that produced the volcanic activity responsible for the Fisher Formation and the Little Butte Volcanic Series. As the angle of the subducting plate shifted, the volcanic activity gradually shifted east of the region. The bedrock in the project area is composed of tholeiitic basalt from the Little Butte Volcanic Series.

Over the span of geologic time, quaternary sedimentary deposits of alluvium, colluvium, landslide deposits, and terrace deposits have accumulated on the volcanic rock surfaces and in the valleys formed by the rivers. The sediments that directly overlie the bedrock in the project area have been defined as alluvium. Regionally, the alluvium consists of unconsolidated gravel, sand, silt, and clay deposited in modern stream channels, adjoining flood plains, overbanks, and low bedrock terraces.

Across the project area, fill materials are present near the ground surface. These materials were generally placed to re-grade the site prior to development.

3.0 Site Investigations

3.1 General

The subsurface exploration was completed in three phases, between 2018 and 2022, and consisted of five boreholes (designated B-1 through B-5) and 35 probe-holes (designated P-01 through P-35).

The site investigations were performed under the direction of a geologist or geotechnical engineer from MJA, who examined and logged the soil and rock conditions encountered in the borings. The soils were classified in the field in accordance with the Visual-Manual Procedure (ASTM D 2488). Sample depths, stratigraphy, groundwater occurrence and soil engineering characteristics were also recorded. The stratigraphic contacts indicated on the logs represent the approximate boundaries between soil and rock; actual transitions may be more gradual. The boring logs are presented in Appendix A. The soil and rock samples were transported to the MJA Portland office for further examination. The rock core samples were transported, stored, cataloged, and disposed of in accordance with the Standard Practices for Preserving and Transporting Rock Core Samples (ASTM D 5079). The rock core photos are included in Appendix B

3.2 Exploratory Borings

Phase one was completed between April 30 and May 2, 2018 and included the advancement of five boreholes (B-1 through B-5) and fifteen probe-holes (P-01 through P-15). The Phase one borings were completed by Western States Soil Conservations Services of Hubbard, Oregon using a truck-mounted CME-75 drill rig. The boreholes were advanced to depths ranging from 5.8 to 23 feet bgs using mud-rotary drilling techniques within soil materials, and HQ-triple-tube wireline coring in rock materials in accordance with ASTM D 2113. The probe-holes were advanced using hollow-stem auger drilling techniques and extended to depths ranging from 2.5 to 15 feet bgs at which point drilling refusal was encountered at the top of the bedrock surface.

Phase two was completed on October 29, 2019 and consisted of the advancement of 12 probe-holes (designated P-16 through P-27). The phase two probe-holes were completed by McCallum Rock Drilling of Salem, Oregon using a track-mounted Furakawa 900 drill rig. The probe-holes were advanced to depths ranging from 11 to 26 feet bgs using air percussion drilling methods.

Phase three was completed on June 20, 2022 and consisted of eight probe-holes (designated P-28 through P-35) advanced by PLI Systems of Hillsboro, Oregon using a truck-mounted Mobile B-75 drill rig. The probe-holes were advanced using hollow-stem auger drilling techniques and extended to depths ranging from 3.7 to 19 feet bgs.

In borings B-2 through B-5 and probe-holes P-28 through P-35, disturbed soil samples were collected in conjunction with a SPT at selected intervals using a standard 2-inch diameter split-barrel sampler, and automatic safety hammer system. In each test, the sampler was advanced 18 inches by dropping the 140-pound hammer a distance of 30 inches for each strike in accordance with ASTM D 1586. The number of hammer blows for each six inches of penetration was recorded. The standard penetration resistance (N-value) of the soil is calculated as the sum of the number of blows required for the final 12 inches of sampler penetration. The SPT N-values of greater than 50 blows per six inches of penetration is referred

to as refusal. The N-value is an indication of the relative density of granular soils and the relative consistency of cohesive soils. Uncorrected N-values are presented on the boring logs. In addition to the SPT sampling, relatively undisturbed samples were obtained in selected borings by pushing a 3-inch inside diameter thin wall sampler (Shelby Tube) in accordance with ASTM D 1587.

In the probe-holes in which SPT sampling was not performed, soil samples were taken from borehole cuttings. These sampling locations are shown in boring logs.

3.3 Piezometers

Two-inch diameter piezometers were installed in two boreholes to allow for long-term, stabilized groundwater level measurements. Piezometers were installed in the following boreholes:

- Boring B-3, screened between 9 and 12 feet bgs.
- Boring B-5, screened between 5.5 and 8.5 feet bgs.

3.4 Borehole Backfill and Abandonment

Piezometer construction and borehole backfilling and abandonment was performed in accordance with the requirements of the Oregon Department of Water Resources (OAR 690-240, Construction, Maintenance, Alteration, Conversion, and Abandonment of Monitoring Wells, Geotechnical Holes, and Other Holes in Oregon).

4.0 Laboratory Testing

Field samples obtained from exploratory borings were delivered to the MJA Portland office for further examination and storage. Each of the samples was re-examined and compared to the field boring log description to confirm the field classifications and maintain consistency. Representative samples were then selected for laboratory testing. Testing was performed on soil and rock samples from boreholes B-1, B-3, and B-5. The laboratory test results are provided in Appendix B. The laboratory testing included the following index and strength property tests, performed in accordance with relevant ASTM standards:

- Moisture content analyses (ASTM D 2216).
- Atterberg limits tests (ASTM D 4318).
- Point load tests of rock core (ASTM D 5731).
- Unconfined compressive strength of intact rock core (ASTM D 7012).

Point load testing was performed by MJA. All other laboratory testing was performed by Northwest Testing, Inc. of Wilsonville, Oregon. Laboratory test results are presented in Appendix B. A summary of the laboratory test results is provided in Table 4-1 on the following page. Comprehensive laboratory test results are presented in Appendix C.

Table 4-1. Laboratory Test Results Summary

Sample Location or ID				Soil Description			Moisture %	Atterberg Limits			Strength Testing		
											Point Load Strength Index, PLI	PLI Test Type	UCS[1]
Boring	Sample, No.	Top Depth (feet)	Bottom Depth (feet)	Geologic Unit	USCS Soil Type	Soil or Rock Description		Liquid Limit (LL)	Plastic Limit (PL)	Plasticity Index (PI)	Corrected Point Load Strength Index, $I_{s(50)}$ (PSI)	Diametral or Axial	PSI
B-1	R-1	5.2	6.3	LBVS Basalt		BASALT							25,302
B-3	S-2	5	6.5	FILL	CH	SANDY FAT CLAY	44.8	51	28	23			
B-5	S-1	2.5	4	FILL	SM	SILTY SAND with Gravel	26.3	44	28	16			
B-5	R-1	11.7	12.4	LBVS Basalt		BASALT							29,919
B-5	R-2	18.0	19.0	LBVS Basalt		BASALT							6,932
B-5	R-2	16.8	17.2	LBVS Basalt		BASALT					513	Diametral	12,563[2]
B-5	R-2	16.3	16.8	LBVS Basalt		BASALT					304	Diametral	7,437[2]
B-5	R-2	16.8	17.0	LBVS Basalt		BASALT					653	Diametral	13,717[2]
B-5	R-2	17.2	18.0	LBVS Basalt		BASALT					268	Diametral	5,098[2]
B-5	R-2	17.6	18.0	LBVS Basalt		BASALT					569	Diametral	13,951[2]
B-5	R-3	22.5	23.0	LBVS Basalt		BASALT					579	Diametral	13,315[2]
B-5	R-1	9.0	9.5	LBVS Basalt		BASALT					407	Diametral	9,778[2]
B-5	R-2	12.4	12.8	LBVS Basalt		BASALT					714	Diametral	17,138[2]
B-5	R-2	15.8	16.7	LBVS Basalt		BASALT					383	Diametral	9,185[2]
B-5	R-2	16.3	16.7	LBVS Basalt		BASALT					690	Diametral	14,493[2]

[1] UCS = Unconfined compressive strength.
[2] UCS results from point load strength index testing are based on a correlation factor of 24.5, which was calculated by plotting the relationship between UCS and point load strength index test results.

5.0 Subsurface Conditions

The materials encountered in the explorations were grouped into three geotechnical units: Pavement, Fill, and Basalt (Little Butte Volcanic Series – Tholeiitic Basalt). These units have been defined by their geologic origin, stratigraphic position, engineering properties, and their distribution in the subsurface. Variations in subsurface conditions may exist between the locations of the borings. Contacts between the units may be more gradational than shown in the boring logs in Appendix A. The SPT N-values, shown on the boring logs and discussed below, are reported as counted in the field (uncorrected). Photos of rock core samples are provided in Appendix C. Cross sections of subsurface conditions are shown in Figures 3A through 3F. The following sections describe each geotechnical unit in greater detail.

5.1.1 Pavement

Asphalt concrete (AC) pavement was encountered in 12 borings (P-01, P-03, P-04, P-16, P-17, P-19, P-23, P-25, P-29, P-31, P-32, and P-34). The AC pavement ranged from about 4 to 6 inches in thickness and was typically underlain by about 4 inches of crushed rock base. Portland Cement Concrete (PCC) pavement was encountered in two borings (B-1 and P-27). In B-1, the PCC pavement was about 18 inches thick and underlain by about 12 inches of crushed rock base. In P-27, the PCC pavement section was about 6 inches thick.

5.1.2 Fill

Undocumented fill materials were present in all the explorations and were likely placed for site grading and development. We observed highly variable fill depths across the site, extending from the existing ground surface to depths ranging from 2 to 16.5 feet bgs. Additionally, the fill depths often varied considerably over short distances. The fill was underlain by bedrock, and generally consisted of silt with variable amounts of organics, lean to fat clay with variable amounts of sand and gravel, sand and gravel with variable amounts of silt and clay, and organic soil with variable amounts of sand. Undocumented fill refers to materials placed without (available) records of subgrade conditions or evaluation of compaction. Standard Penetration Tests (SPTs) conducted within the fill yielded N-values ranged from 0 to 45 blows per foot (bpf). The higher N-values were generally recorded at the fill-bedrock contact.

5.1.3 Basalt - Little Butte Volcanic Series Tholeiitic Basalt

The Little River Butte Volcanic Series (LRBV) in the project area consists of tholeiitic basalt and is bedrock in this area. The basalt was encountered beneath the fill in all the explorations. The contact between fill and LBVS was generally selected based on auger refusal, drilling resistance, drill cuttings, and/or SPT refusal (more than 50 blow counts for 6 inches or less of penetration). The depth to the LRBV ranged from 2.0 feet to 16.5 feet bgs.

The strength of the basalt rock generally varies from strong to very strong (R4 to R5). Rock strength descriptors are presented in Table 5-1. The basalt is slightly weathered to fresh, moderately to highly fractured (i.e., joint spacing from 3 feet to 2 inches), and gray. The joints were generally sub-horizontal or high angle, smooth to rough, planar, curved, and irregular in shape. The occasional joint had a less than

0.1-inch-thick light blue green coating. Core recovery ranged from 80 to 100 percent. The Rock Quality Designation of the cored rock (RQD) ranged from 42 to 86 percent, with an average value of 67 percent.

Table 5-1. Definition of Rock Strength Descriptions

Grade[1]	Approximate Uniaxial Compressive Strength (psi)	Qualitative Description
R0	35 – 150	Extremely Weak
R1	150 – 700	Very Weak
R2	700 – 3,600	Weak
R3	3,600 – 7,200	Medium Strong
R4	7,200 – 14,500	Strong
R5	14,500 – 36,000	Very Strong
R6	>36,000	Extremely Strong

[1] Rock strength grades from Brown (1981).

Three unconfined compressive strength tests were completed on selected rock core samples. The unconfined compressive strength of the rock cores ranged from 6,932 psi to 25,919 psi with an average value of 19,384 psi. The results of point load tests indicate the Point Load Index ($I_{S(50)}$) of the basalt ranged between approximately 268 psi and 714 psi, with an average value of 508 psi. Depth to rock at each exploration is summarized in Table 5-2. The depth to bedrock is also included on the geologic cross sections shown in Figures 3A through 3F.

Table 5-2. Depth of Fill / Depth to Rock Summary

Exploration ID	Associated Structure(s)	Ground Surface Elevation (feet)	Depth to Rock (feet)	Rock Surface Elevation (feet)
B-1	--	516.5	2.5	514.0
B-2	SC90 WAS Pump Station	518.3	16.5	501.8
B-3	Primary Clarifier	529.9	11	518.9
B-4	Building A – O&M & Controls	538.6	4.5	534.1
B-5	MEB Building	528.8	8.5	520.3
P-01	--	517.3	11	506.3
P-02	--	526.1	11.5	514.6
P-03	Primary Clarifier	530.4	16	514.4
P-04	Building A – Headworks & Dewatering	530.8	7.5	523.3
P-05	Building A – Headworks & Dewatering	533.1	3.5	529.6
P-06	Building A – O&M & Controls	536.2	3.5	532.7
P-07	--	538.0	2.5	535.5
P-08	Building A – O&M & Controls	535.3	7.5	527.8
P-09	--	530.5	4	526.5
P-10	--	530.1	5.5	524.6
P-11	MEB Building	529.8	5.5	524.3
P-12	MEB Building	526.4	5	521.4
P-13	Future Aeration Basin No. 4	523.6	8.5	515.1
P-14	Aeration Basin No. 3	521.7	5.5	516.2
P-15	--	519.1	2.5	516.6
P-16	IPS	517.1	12.0	505.1
P-17	--	516.5	6.0	510.5
P-18	SC90, SC60 RAS/WAS Pump Station	518.5	9.0	509.5
P-19	--	518.0	6.0	512.0
P-20	SC90 RAS Pump Station	525.4	8.0	517.4
P-21	Primary Clarifier, Aeration Basin No. 3	521.8	6.0	515.8
P-22	Aeration Basin No. 3	518.5	7.0	511.5
P-23	Primary Clarifier	530.4	15.0	515.4
P-24	MEB Building	529.7	3.0	526.7
P-25	Future Outfall	506.4	2.0	504.4
P-26	Future Outfall	507.2	3.0	504.2
P-27	--	516.6	10.0	506.6
P-28	IPS	516.5	11.0	505.5
P-29	IPS	517.3	12.5	504.8
P-30	SC90	519.8	11.0	508.8
P-31	SC90	520.8	10.0	510.8
P-32	Primary Clarifier, Future Primary Clarifier No. 4	530.4	10.0	520.4
P-33	Future Outfall	529.6	3.5	526.1
P-34	Tertiary Filters	516.9	15.0	501.9
P-35	-	517.5	6.0	511.5

5.2 Groundwater

Two-inch diameter, PVC groundwater observation wells were installed in borings B-3 and B-5. Initial groundwater levels recorded on May 2, 2018, with subsequent levels recorded on October 29, 2019, and on June 20, 2022. We also observed groundwater in nine other exploration locations, as summarized in Table 5-3. Groundwater levels are noted on the boring logs in Appendix A.

Groundwater levels may vary with precipitation, the time of year, and/or other factors. Generally, groundwater highs occur near the end of the wet season in late spring and groundwater lows occur near the end of the dry season in the early fall.

Table 5-3. Groundwater Level Measurements

Boring ID	Piezometer	Borehole Elevation (feet)	Depth to Groundwater (feet)			Groundwater Elevation (feet)		
			May 2, 2018	Oct 29, 2019	June 20, 2022	May 2, 2018	Oct 29, 2019	June 20, 2022
B-2	No	518.3	2.5	-	-	515.8	-	-
B-3	Yes	529.9	2.9	3.6	8.2	527.0	526.3	521.7
B-4	No	538.6	2.0	-	-	536.6	-	-
B-5	Yes	528.8	5.0	7.0	6.8	523.8	521.8	522.0
P-03	No	530.4	8.5	-	-	521.9	-	-
P-09	No	530.5	3.0	-	-	527.5	-	-
P-13	No	523.6	6.0	-	-	517.6	-	-
P-15	No	519.1	2.5	-	-	516.6	-	-
P-29	No	517.3	-	-	10.5	-	-	506.8
P-31	No	520.8	-	-	9.2	-	-	511.6
P-32	No	530.4	-	-	9.7	-	-	520.7

6.0 Limitations

This Geotechnical Data Report has been prepared for the City of Sweet Home Mahler Water Reclamation Facility Improvements Project located in Sweet Home, Oregon. This report contains a compilation of information from field explorations, laboratory test data, and published literature. The professional judgments and characterizations presented herein are based on this information. McMillen Jacobs Associates is not responsible for errors and omissions that may appear in the field exploration and laboratory test results performed by others.

It shall be noted that the geotechnical data were obtained at specific exploration locations at specific times. It must be acknowledged that variations in soil/rock conditions exist between exploration locations, and this report does not necessarily reflect the variations between explorations. The nature and extent of variation may not become evident until exposed during construction. No analyses, interpretations between exploration locations, conclusions, or design recommendations are contained in this report. This report should be made available to prospective contractors for use as factual data only, and not as a warranty of subsurface conditions.

The scope of our geotechnical services has not included an environmental evaluation regarding the presence or absence of hazardous or toxic materials in the soil, surface water, groundwater, or air, on or below the site, or for evaluation of disposal of contaminated soils or groundwater, should they be encountered.

This report has been completed within the limitations of the agreement between the Owners and West Yost Associates, Inc. and the West Yost Associates, Inc.-approved scope of work, schedule, and budget with McMillen Jacobs Associates. The services rendered have been performed in a manner consistent with the level of care and skill ordinarily exercised by members of the profession currently practicing under similar conditions in the same area. McMillen Jacobs Associates is not responsible for the use of this report in connection with anything other than the project at the project location.

MCMILLEN JACOBS ASSOCIATES

Wolfe Lang, P.E., G.E. Principal Geotechnical Engineer	Jeff Quinn, P.E. Senior Project Engineer

7.0 References

ASTM Standard, 2017, ASTM International, West Conshohocken, PA, 2017, www.astm.org.

Brown E.T. (Ed). 1981, Rock characterization, testing and monitoring - ISRM suggested methods, 171-183. Oxford, Pergoman.

Brown and Caldwell, 2016, City of Sweet Home Wastewater Facilities Plan, December 2016.

Madin, I.P., 1990. Earthquake-Hazard Geology Maps of the Portland metropolitan Area, Oregon: Oregon Department of Geology and Mineral Industries Open-File Report O-90-02.

Popowski, T.A., 1996. Geology, Structure, and Tectonic History if the /Tualatin Basin, Northwestern Oregon: Corvallis, Oregon, Oregon State University Master's Thesis.

Schlicker, H.G. and Deacon, R.J., 1967. Engineering Geology of the Tualatin Valley Region, Oregon: Oregon Department of Geology and Mineral Industries Bulletin 60.

Wilson, D.C., 1998, Post-middle Miocene geologic evolution of the Tualatin basin, Oregon: Oregon Geology, v. 60, no. 5, p. 99-116.

Figures

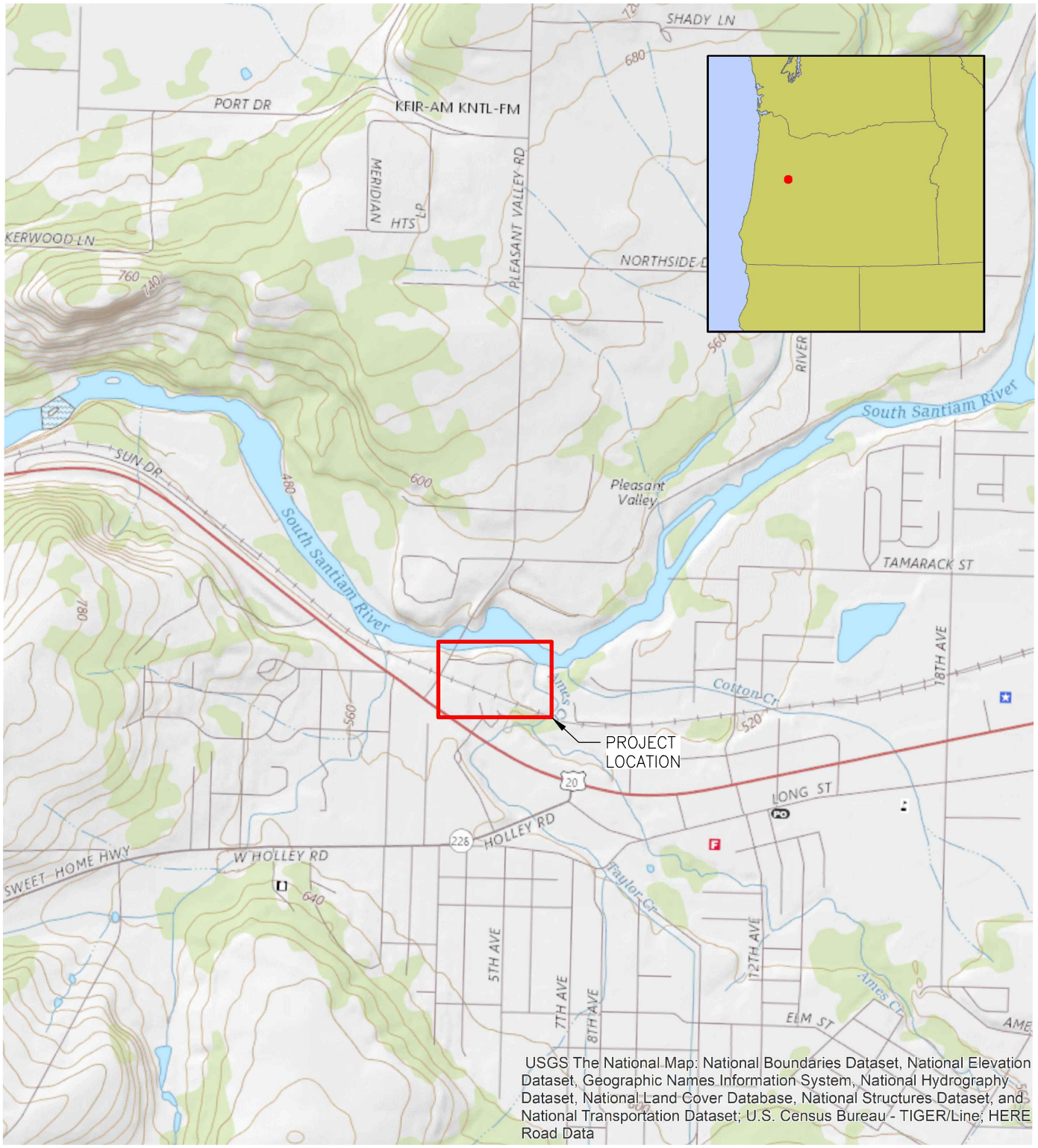

PROJECT VICINITY MAP

SCALE: NTS

N

McMILLEN JACOBS ASSOCIATES

CITY OF SWEET HOME

MAHLER WATER RECLAMATION FACILITY IMPROVEMENTS

GEOTECHNICAL DATA REPORT
PROJECT VICINITY MAP

FIG.1

JULY 2022

Path: C:\Users\cburke\Box\Jobs\6367.0 Sweet Home WWTP Final Design Review\900 Design Technology\970_Xrefs\Fig.1 – Vicinity map.dwg Plot date: Jul 21, 2022, CAD User: cburke

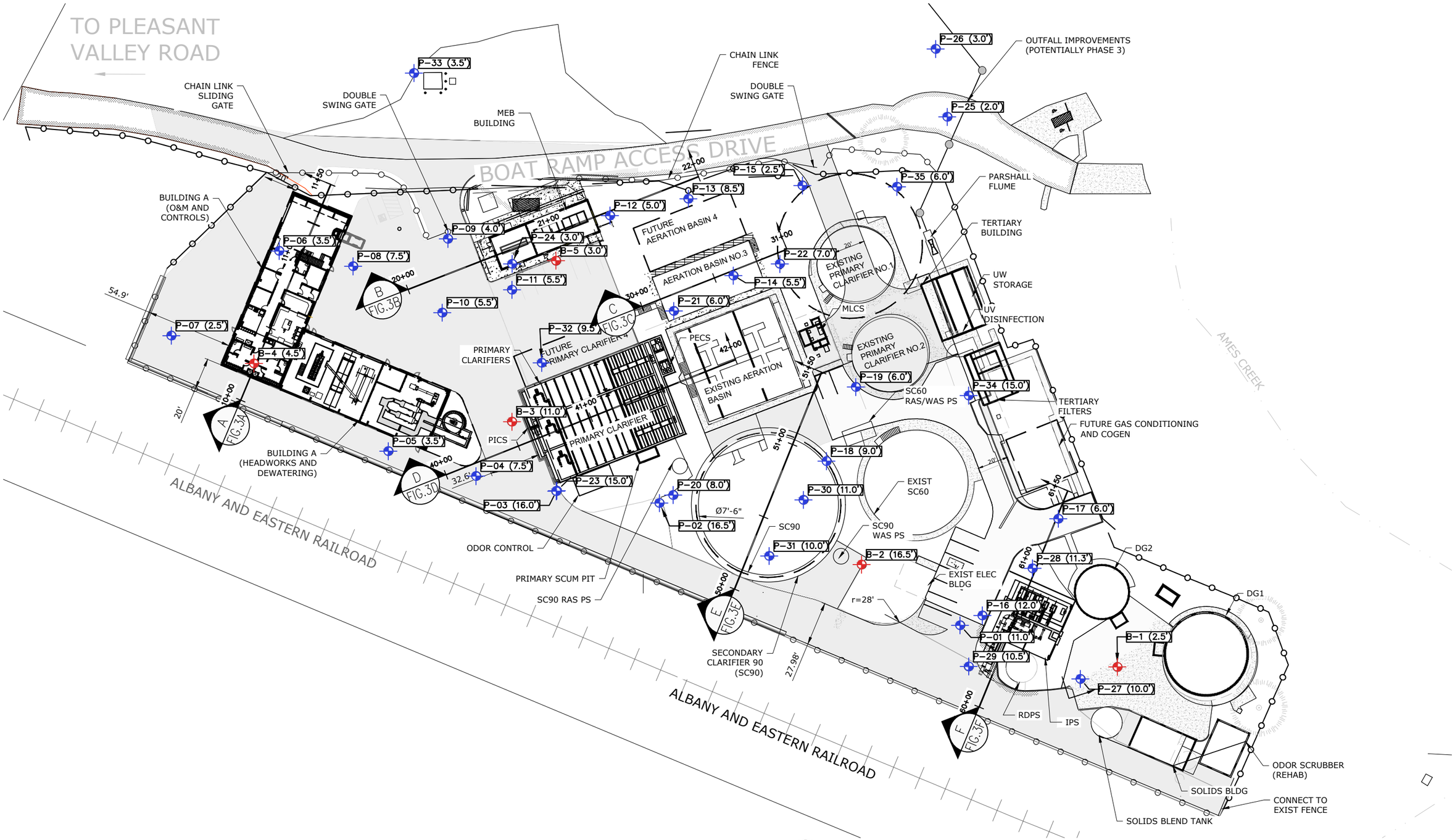

LEGEND:

B-1 (XX.X') BOREHOLE LOCATION (DEPTH TO ROCK IN FT)

P-01 (XX.X') PROBE-HOLE LOCATION (DEPTH TO ROCK IN FT)

EXPLORATION PLAN

SCALE: 1"=60'

0' 60' 120'

A

N

McMILLEN JACOBS ASSOCIATES

CITY OF SWEET HOME

MAHLER WATER RECLAMATION FACILITY IMPROVEMENTS

GEOTECHNICAL DATA REPORT
EXPLORATION PLAN

FIG.2

JULY 202

: C:\Users\cburke\Box\Jobs\63670 Sweet Home WWTP Final Design Review\900 Design Technology\970_Xrefs\SITE PLAN.dwg Plot date: Jul 22, 2022, CAD User: cburke

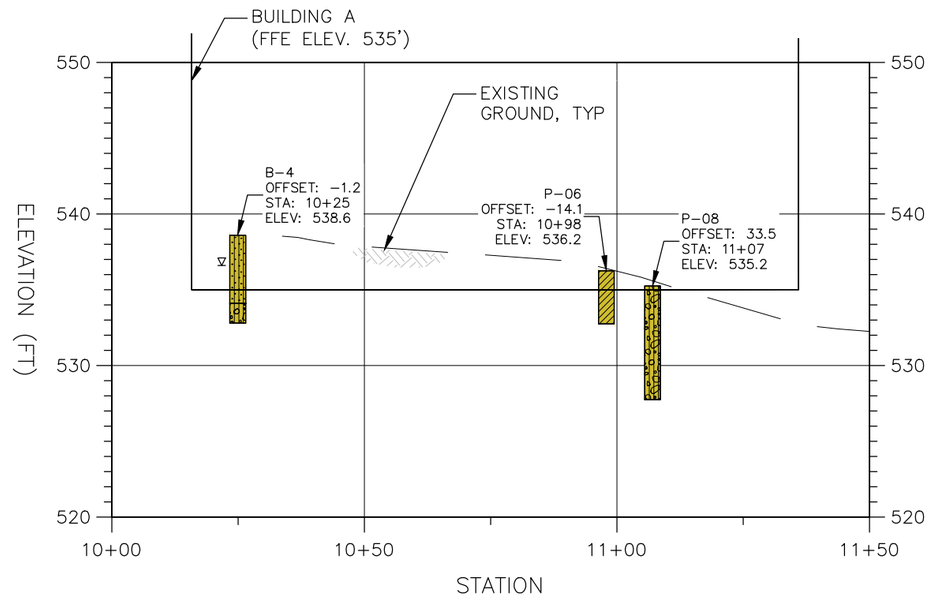

GEOLOGIC PROFILE STA 10+00 TO 11+50

SCALE: 1"=30' HORIZ
1"=10' VERT

0' 30' 60'
0' 10' 20'

A
FIG.2

BORING/PROBE-HOLE LEGEND:

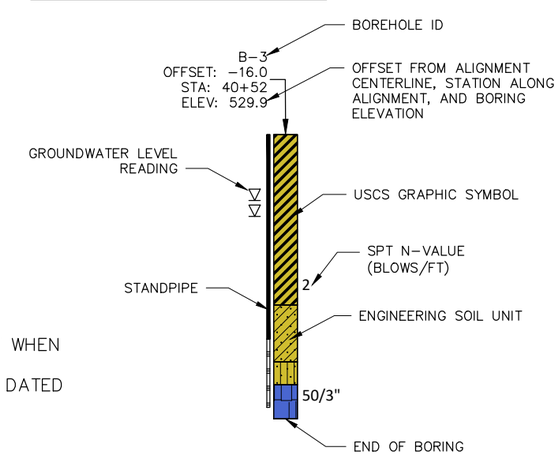

STRATIGRAPHIC LEGEND:

- WELL-GRADED GRAVEL (GW)
- SILTY GRAVEL (GM)
- CLAYEY GRAVEL (GC)
- SILTY SAND (SM)
- CLAYEY SAND (SC)
- SILT (ML)
- LEAN CLAY (CL)
- LOW PLASTICTIY ORGANIC CLAY (OL)
- FAT CLAY (CH)
- BASALT
- FILL
- BASALT

NOTES:

1. BOREHOLE LOCATIONS ARE APPROXIMATE.
2. BOREHOLE LOCATIONS ARE PROJECTED PERPENDICULAR TO ALIGNMENT.
3. OFFSETS ARE NEGATIVE LEFT OF ALIGNMENT AND POSITIVE RIGHT OF ALIGNMENT WHEN TRAVELING IN THE DIRECTION OF INCREASING STATION.
4. ALIGNMENT IS BASED ON 90% DRAWINGS PROVIDED BY WEST YOST ASSOCIATES, DATED JUNE 2022.

McMILLEN JACOBS ASSOCIATES

CITY OF SWEET HOME

MAHLER WATER RECLAMATION FACILITY IMPROVEMENTS

GEOTECHNICAL DATA REPORT
GEOLOGIC PROFILE
BUILDING A

FIG.3A

JULY 202

: C:\Users\cburke\Box\Jobs\6367.0 Sweet Home WWTP Final Design Review\900 Design Technology\970_Xrefs\PROFILES.dwg Plot date: Jul 22, 2022, CAD User: cburke

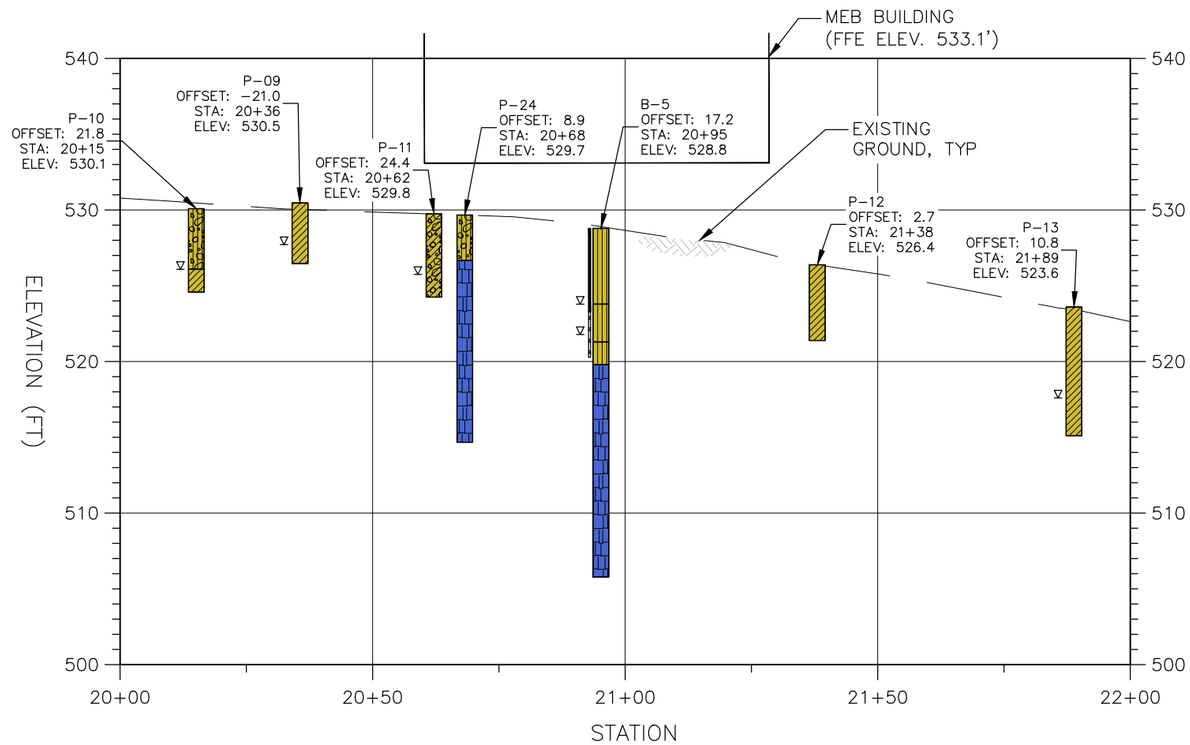

GEOLOGIC PROFILE STA 20+00 TO 22+00

SCALE: 1"=30' HORIZ
1"=10' VERT

0' 30' 60'

0' 10' 20'

B
FIG.2

BORING/PROBE-HOLE LEGEND:

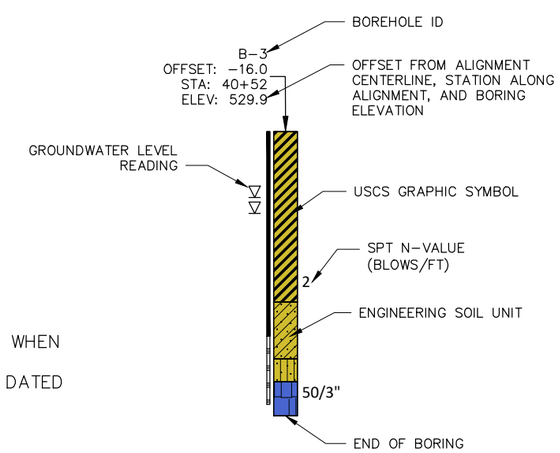

STRATIGRAPHIC LEGEND:

- WELL-GRADED GRAVEL (GW)
- SILTY GRAVEL (GM)
- CLAYEY GRAVEL (GC)
- SILTY SAND (SM)
- CLAYEY SAND (SC)
- SILT (ML)
- LEAN CLAY (CL)
- LOW PLASTICTIY ORGANIC CLAY (OL)
- FAT CLAY (CH)
- BASALT
- FILL
- BASALT

NOTES:

1. BOREHOLE LOCATIONS ARE APPROXIMATE.
2. BOREHOLE LOCATIONS ARE PROJECTED PERPENDICULAR TO ALIGNMENT.
3. OFFSETS ARE NEGATIVE LEFT OF ALIGNMENT AND POSITIVE RIGHT OF ALIGNMENT WHEN TRAVELING IN THE DIRECTION OF INCREASING STATION.
4. ALIGNMENT IS BASED ON 90% DRAWINGS PROVIDED BY WEST YOST ASSOCIATES, DATED JUNE 2022.

McMILLEN JACOBS ASSOCIATES

CITY OF SWEET HOME

MAHLER WATER RECLAMATION FACILITY IMPROVEMENTS

GEOTECHNICAL DATA REPORT
GEOLOGIC PROFILE
MEB BUILDING

FIG.3B

JULY 202

: C:\Users\cburke\Box\Jobs\63670 Sweet Home WWTP Final Design Review\900 Design Technology\970_Xrefs\PROFILES.dwg Plot date: Jul 22, 2022, CAD User: cburke

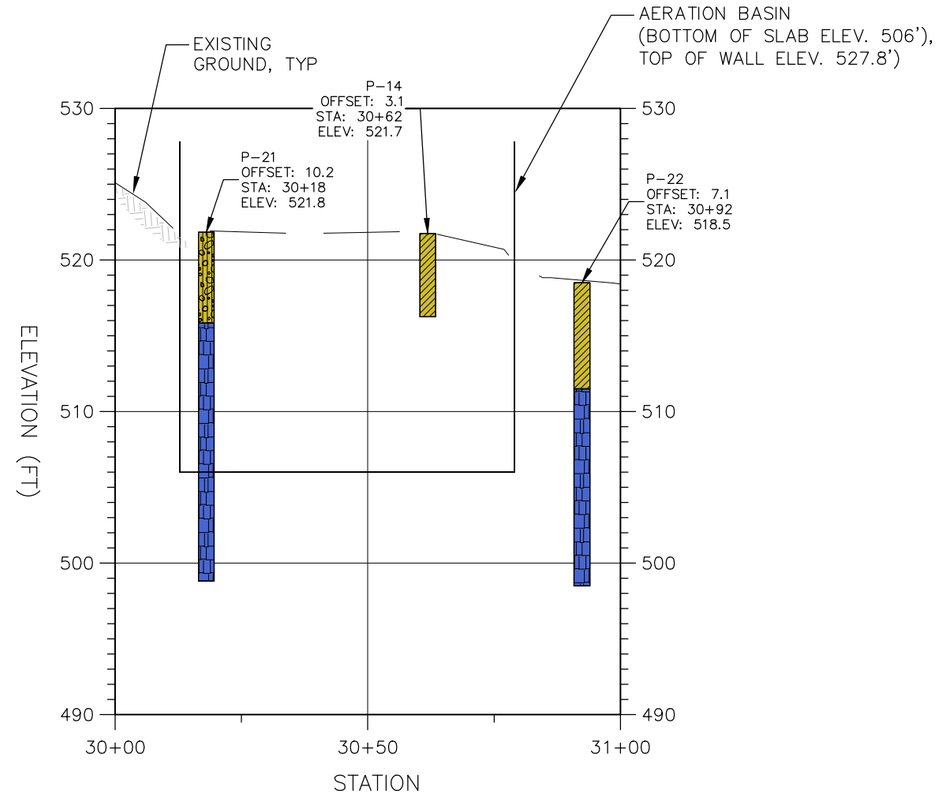

GEOLOGIC PROFILE STA 30+00 TO 31+00

SCALE: 1"=30' HORIZ
1"=10' VERT

0' 30' 60'
0' 10' 20'

C
FIG.2

BORING/PROBE-HOLE LEGEND:

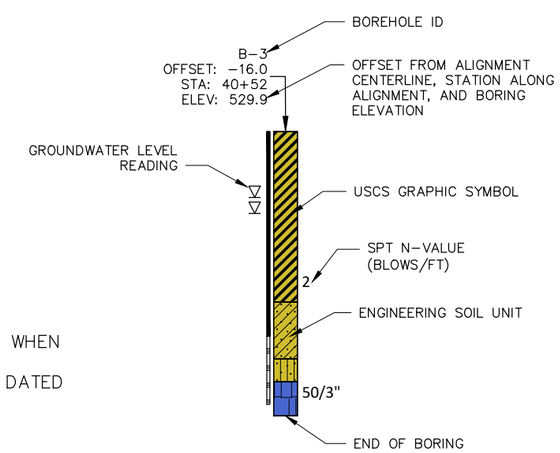

STRATIGRAPHIC LEGEND:

- WELL-GRADED GRAVEL (GW)
- SILTY GRAVEL (GM)
- CLAYEY GRAVEL (GC)
- SILTY SAND (SM)
- CLAYEY SAND (SC)
- SILT (ML)
- LEAN CLAY (CL)
- LOW PLASTICTIY ORGANIC CLAY (OL)
- FAT CLAY (CH)
- BASALT
- FILL
- BASALT

NOTES:

1. BOREHOLE LOCATIONS ARE APPROXIMATE.
2. BOREHOLE LOCATIONS ARE PROJECTED PERPENDICULAR TO ALIGNMENT.
3. OFFSETS ARE NEGATIVE LEFT OF ALIGNMENT AND POSITIVE RIGHT OF ALIGNMENT WHEN TRAVELING IN THE DIRECTION OF INCREASING STATION.
4. ALIGNMENT IS BASED ON 90% DRAWINGS PROVIDED BY WEST YOST ASSOCIATES, DATED JUNE 2022.

McMILLEN JACOBS ASSOCIATES

CITY OF SWEET HOME

MAHLER WATER RECLAMATION FACILITY IMPROVEMENTS

GEOTECHNICAL DATA REPORT
GEOLOGIC PROFILE
AERATION BASIN NO. 3

FIG.3C

JULY 202

: C:\Users\cburke\Box\Jobs\63670 Sweet Home WWTP Final Design Review\900 Design Technology\970_Xrefs\PROFILES.dwg Plot date: Jul 22, 2022, CAD User: cburke

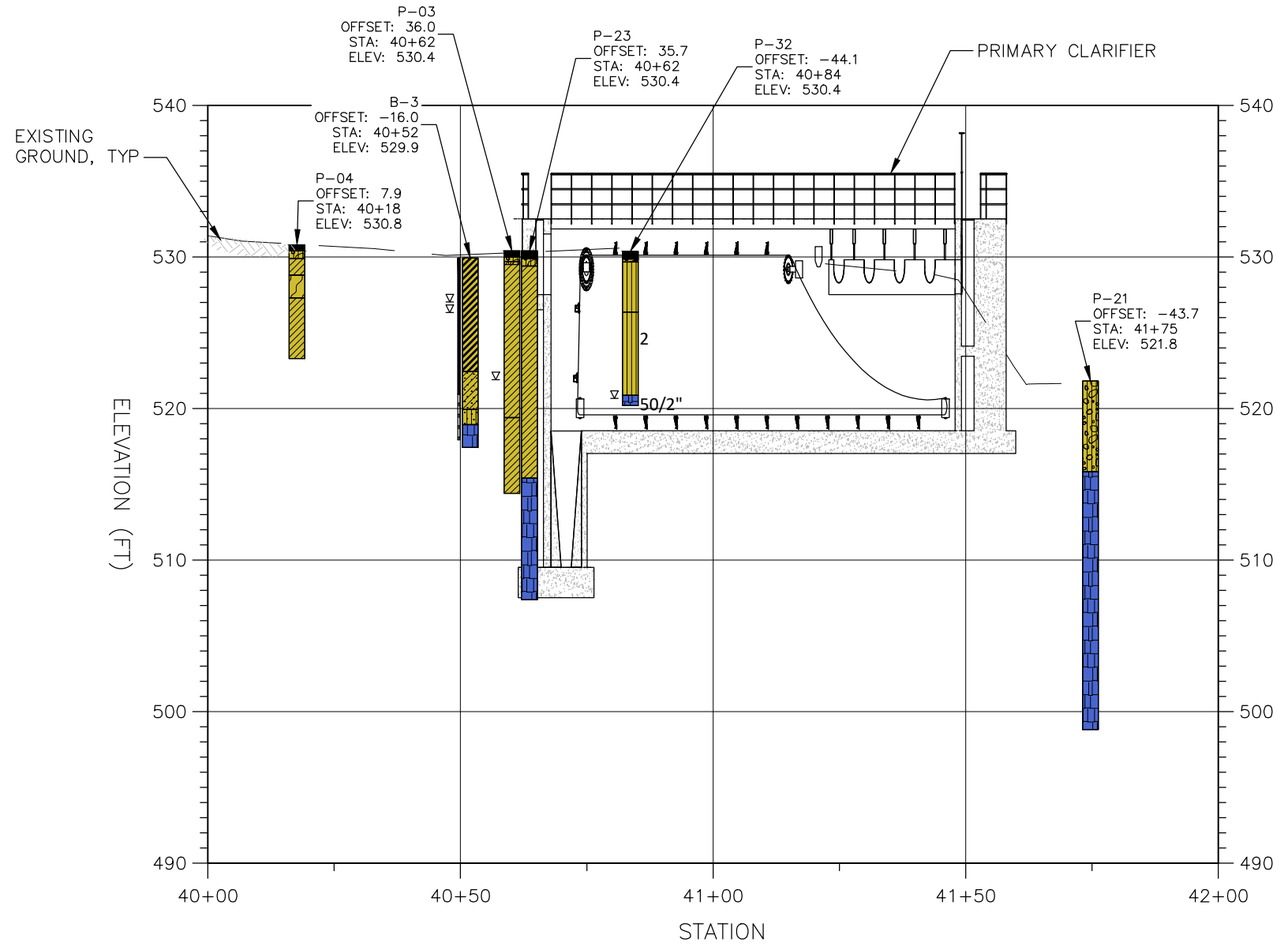

GEOLOGIC PROFILE STA 40+00 TO 42+00

SCALE: 1"=30' HORIZ
1"=10' VERT

0' 30' 60'
0' 10' 20'

D
FIG.2

BORING/PROBE-HOLE LEGEND:

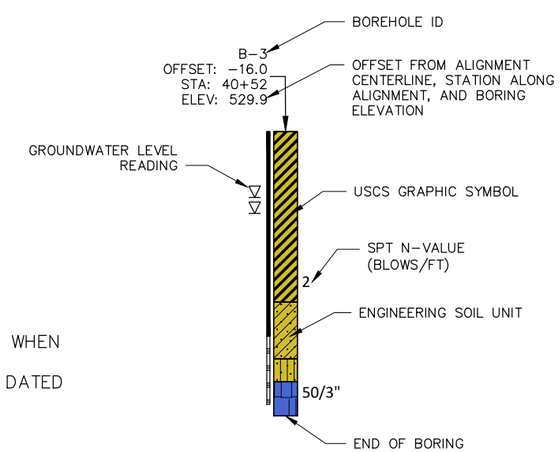

STRATIGRAPHIC LEGEND:

- WELL-GRADED GRAVEL (GW)
- SILTY GRAVEL (GM)
- CLAYEY GRAVEL (GC)
- SILTY SAND (SM)
- CLAYEY SAND (SC)
- SILT (ML)
- LEAN CLAY (CL)
- LOW PLASTICTIY ORGANIC CLAY (OL)
- FAT CLAY (CH)
- BASALT
- FILL
- BASALT

NOTES:

1. BOREHOLE LOCATIONS ARE APPROXIMATE.
2. BOREHOLE LOCATIONS ARE PROJECTED PERPENDICULAR TO ALIGNMENT.
3. OFFSETS ARE NEGATIVE LEFT OF ALIGNMENT AND POSITIVE RIGHT OF ALIGNMENT WHEN TRAVELING IN THE DIRECTION OF INCREASING STATION.
4. ALIGNMENT IS BASED ON 90% DRAWINGS PROVIDED BY WEST YOST ASSOCIATES, DATED JUNE 2022.

McMILLEN JACOBS ASSOCIATES

CITY OF SWEET HOME

MAHLER WATER RECLAMATION FACILITY IMPROVEMENTS

GEOTECHNICAL DATA REPORT
GEOLOGIC PROFILE
PRIMARY CLARIFIER

FIG.3D

JULY 202

C:\Users\cburke\Box\Jobs\6367.0 Sweet Home WWTP Final Design Review\900 Design Technology\970_Xrefs\PROFILES.dwg Plot date: Jul 22, 2022, CAD User: cburke

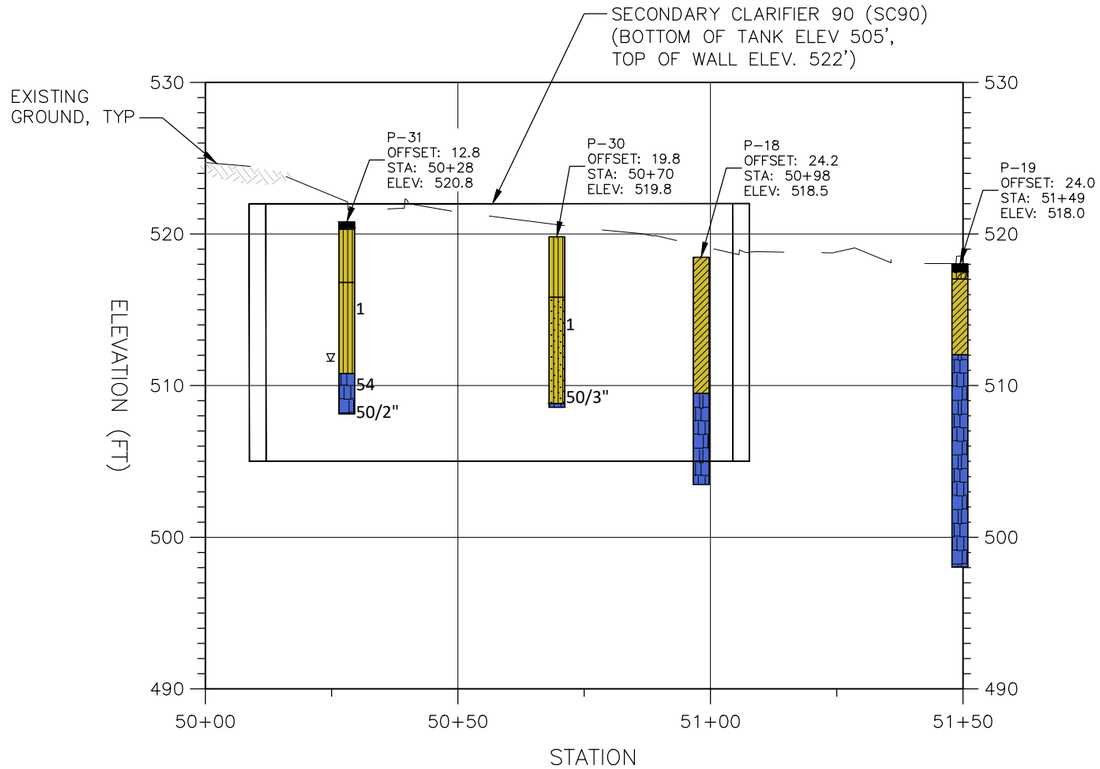

GEOLOGIC PROFILE STA 50+00 TO 51+50

SCALE: 1"=30' HORIZ
1"=10' VERT

0' 30' 60'

0' 10' 20'

E
FIG.2

BORING/PROBE-HOLE LEGEND:

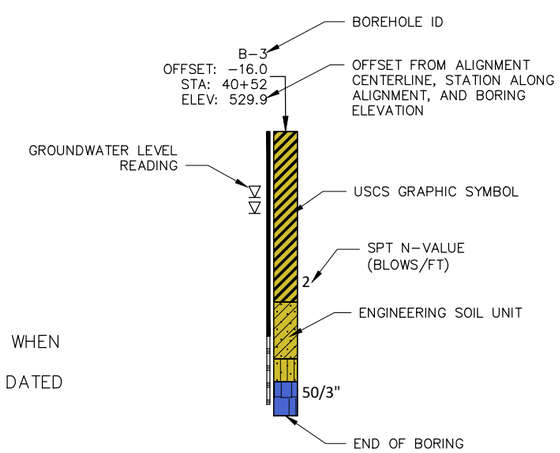

STRATIGRAPHIC LEGEND:

- WELL-GRADED GRAVEL (GW)
- SILTY GRAVEL (GM)
- CLAYEY GRAVEL (GC)
- SILTY SAND (SM)
- CLAYEY SAND (SC)
- SILT (ML)
- LEAN CLAY (CL)
- LOW PLASTICTIY ORGANIC CLAY (OL)
- FAT CLAY (CH)
- BASALT
- FILL
- BASALT

NOTES:

1. BOREHOLE LOCATIONS ARE APPROXIMATE.
2. BOREHOLE LOCATIONS ARE PROJECTED PERPENDICULAR TO ALIGNMENT.
3. OFFSETS ARE NEGATIVE LEFT OF ALIGNMENT AND POSITIVE RIGHT OF ALIGNMENT WHEN TRAVELING IN THE DIRECTION OF INCREASING STATION.
4. ALIGNMENT IS BASED ON 90% DRAWINGS PROVIDED BY WEST YOST ASSOCIATES, DATED JUNE 2022.

McMILLEN JACOBS ASSOCIATES

CITY OF SWEET HOME

MAHLER WATER RECLAMATION FACILITY IMPROVEMENTS

GEOTECHNICAL DATA REPORT
GEOLOGIC PROFILE
SECONDARY CLARIFIER 90 (SC90)

FIG.3E

JULY 202

C:\Users\cburke\Box\Jobs\63670 Sweet Home WWTP Final Design Review\900 Design Technology\970_Xrefs\PROFILES.dwg Plot date: Jul 22, 2022, CAD User: cburke

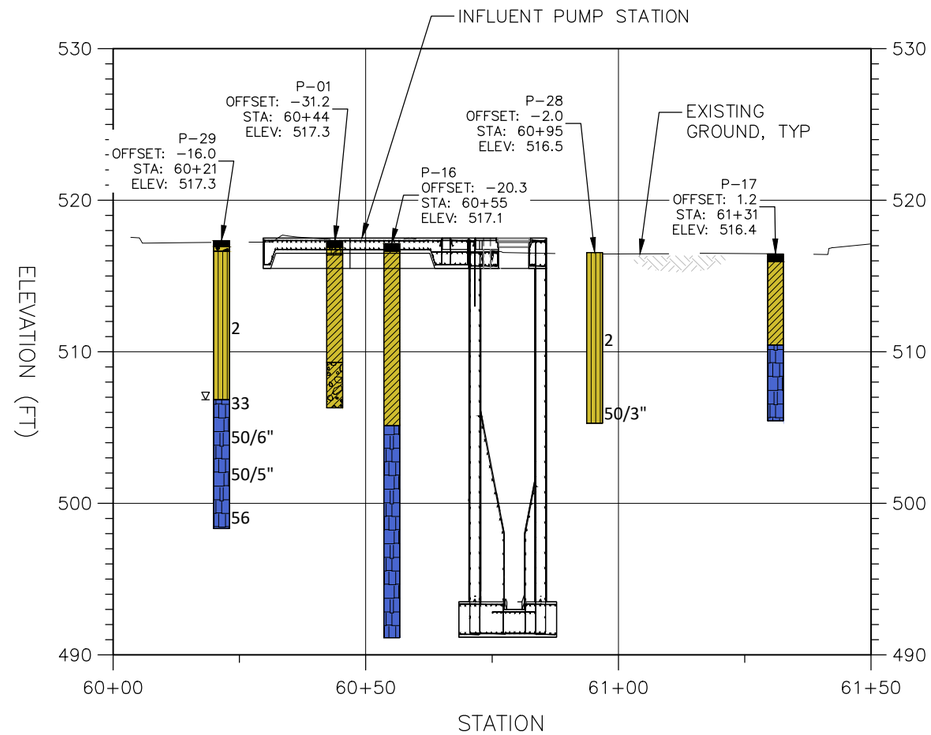

GEOLOGIC PROFILE STA 60+00 TO 61+50

SCALE: 1"=30' HORIZ
1"=10' VERT

0' 30' 60'
0' 10' 20'

F
FIG.2

BORING/PROBE-HOLE LEGEND:

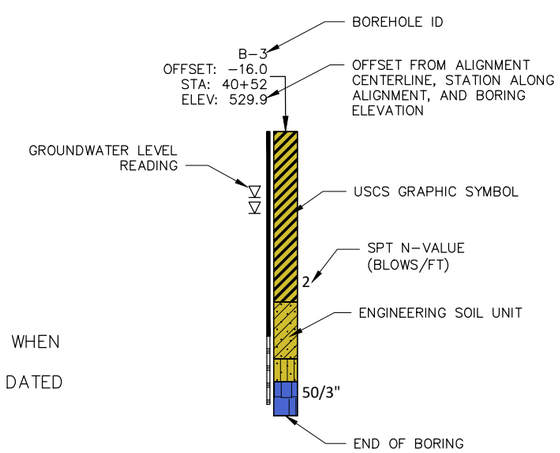

STRATIGRAPHIC LEGEND:

- WELL-GRADED GRAVEL (GW)
- SILTY GRAVEL (GM)
- CLAYEY GRAVEL (GC)
- SILTY SAND (SM)
- CLAYEY SAND (SC)
- SILT (ML)
- LEAN CLAY (CL)
- LOW PLASTICTIY ORGANIC CLAY (OL)
- FAT CLAY (CH)
- BASALT
- FILL
- BASALT

NOTES:

1. BOREHOLE LOCATIONS ARE APPROXIMATE.
2. BOREHOLE LOCATIONS ARE PROJECTED PERPENDICULAR TO ALIGNMENT.
3. OFFSETS ARE NEGATIVE LEFT OF ALIGNMENT AND POSITIVE RIGHT OF ALIGNMENT WHEN TRAVELING IN THE DIRECTION OF INCREASING STATION.
4. ALIGNMENT IS BASED ON 90% DRAWINGS PROVIDED BY WEST YOST ASSOCIATES, DATED JUNE 2022.

McMILLEN JACOBS ASSOCIATES

CITY OF SWEET HOME

MAHLER WATER RECLAMATION FACILITY IMPROVEMENTS

GEOTECHNICAL DATA REPORT
GEOLOGIC PROFILE
INFLUENT PUMP STATION

FIG.3F

JULY 202

C:\Users\cburke\Box\Jobs\63670 Sweet Home WWTP Final Design Review\900 Design Technology\970_Xrefs\PROFILES.dwg Plot date: Jul 22, 2022, CAD User: cburke

Appendix A

Boring Logs

Project: Sweet Home WWTP Schematic Design
Project Location: Sweet Home, OR
Project Number: 5834.0

Log of Boring B-1

Date(s) Drilled: 04/30/2018	Geotechnical Consultant: McMillen Jacobs Associates	Logged By: J. Irizarry	Checked By: K. Elliott
Drilling Method/ Rig Type: Mud Rotary and HQ Wireline/CME 75	Drilling Contractor: Western States Soil Conservation, Inc.	Total Depth of Borehole: 13.5 ft	
Hole Diameter: 4.00 in	Hammer Weight/Drop (lb/in.)/Type: 140 lb / 30 in / Automatic	Ground Surface Elevation/Datum: 516.5 ft	
Location: Survey	Coordinates: 7617396.39 E, 275319.73 N	Elevation Source: Site Survey	

ELEV. (FT) / WATER LEVEL / DEPTH (FT)	SAMPLE TYPE	RECOVERY (%)	SAMPLE #	BLOW COUNTS	PENETRATION RESISTANCE BLOWS/FT (BLOWS/FT 20 40 60 80; MC; LL/PL)	GRAPHIC LOG	USCS	MATERIAL DESCRIPTION	BACKFILL INFORMATION	REMARKS AND TESTS
								Concrete - 18" thick (Pavement)		
							GM	Dense, moist, gray Silty Gravel (GM); Fine to coarse angular gravel, low plasticity silt (Base Aggregate)		
512 / 5		100	RUN 1					BASALT, very strong (R5), slightly weathered to fresh, moderately to highly fractured, planar, stepped, smooth to rough joints with very narrow apertures (Little Butte Volcanic Series - Tholeiitic Basalt) *Run 1: 3.5-8.5 feet.* *RQD = 59%*		At 2.5 feet very slow, very rough drilling. At 3.5 feet switch to rock coring. From 5.20 feet to 6.30 feet, UCS = 25,300 psi.
507 / 10		80	RUN 2					*Run 2: 8.5 -13.5 feet:* *RQD = 42%* *Planar and irregular, smooth to slightly rough joints.*		
502 / 15										Borehole completed at 13.5ft. below ground surface (bgs).
497 / 20										
492 / 25										
487 / 30										

McMILLEN JACOBS ASSOCIATES

Boring B-1

Sheet 1 of 1

Project: Sweet Home WWTP Schematic Design
Project Location: Sweet Home, OR
Project Number: 5834.0

Log of Boring B-2

Date(s) Drilled: 05/01/2018	Geotechnical Consultant: McMillen Jacobs Associates	Logged By: J. Irizarry	Checked By: K. Elliott
Drilling Method/ Rig Type: Mud Rotary/CME 75	Drilling Contractor: Western States Soil Conservation, Inc.	Total Depth of Borehole: 16.5 ft	
Hole Diameter: 4.00 in	Hammer Weight/Drop (lb/in.)/Type: 140 lb / 30 in / Automatic	Ground Surface Elevation/Datum: 518.2 ft	
Location: Survey	Coordinates: 7617232.28 E, 275385.44 N	Elevation Source: Site Survey	

ELEV. (FT) / WATER LEVEL / DEPTH (FT)	SAMPLE TYPE	RECOVERY (%)	SAMPLE #	BLOW COUNTS	USCS	MATERIAL DESCRIPTION	BACKFILL INFORMATION	REMARKS AND TESTS
					OL/OH	Organic Soil (OL/OH); Mulch (Fill)		
5/2/2018 1		47	S1	7-5-11 (N=16)	CL	Very stiff, moist, brown to gray brown, Sandy LEAN CLAY with Gravel (CL); Medium plasticity, medium to low toughness, fine to coarse sand, fine angular gravel (Fill)		
514 / 5		27	S2	2-4-4 (N=8)	SM	Loose, moist to wet, brown, Silty SAND with Gravel (SM); Fine to coarse sand, fine angular gravel, medium plasticity, slow dilatancy (Fill)		
		53	S3	2-3-1 (N=4)	SM	Very loose, wet, brown, Silty SAND (SM); Fine to medium sand, low plasticity fines, rapid dilatancy (Fill)		
509 / 10		73	S4	2-0-0 (N=WOR)		*At 10.0 grades to orange-brown, occurrence of trace, fine, angular gravel, and slow dilatancy.*		
		33	S5	0-0-1 (N=1)				
504 / 15		100	S5	17-18-27 (N=45)	GC	Very dense, moist, gray and olive-brown, CLAYEY GRAVEL with Sand (GC); Fine to coarse angular gravel, fine to coarse sand, medium plasticity fines (Fill)		
499 / 20								Borehole completed at 16.5ft. below ground surface (bgs).
494 / 25								
489 / 30								

PENETRATION RESISTANCE BLOWS/FT: BLOWS/FT 20 40 60 80; MC; LL/PL

GRAPHIC LOG

McMILLEN JACOBS ASSOCIATES

Boring B-2

Sheet 1 of 1

Project: Sweet Home WWTP Schematic Design
Project Location: Sweet Home, OR
Project Number: 5834.0

Log of Boring B-3

Date(s) Drilled: 05/02/2018	Geotechnical Consultant: McMillen Jacobs Associates	Logged By: J. Irizarry	Checked By: K. Elliott
Drilling Method/ Rig Type: Mud Rotary/CME 75	Drilling Contractor: Western States Soil Conservation, Inc.	Total Depth of Borehole: 12.5 ft	
Hole Diameter: 4.00 in	Hammer Weight/Drop (lb/in.)/Type: 140 lb / 30 in / Automatic	Ground Surface Elevation/Datum: 529.9 ft	
Location: Survey	Coordinates: 7617007.93 E, 275477.18 N	Elevation Source: Site Survey	

ELEV. (FT)	DEPTH (FT)	SAMPLE TYPE	RECOVERY (%)	SAMPLE #	BLOW COUNTS	USCS	MATERIAL DESCRIPTION	REMARKS AND TESTS
			53	S1	3-2-1 (N=3)	CH	Soft, moist, gray with trace orange mottles, Sandy FAT CLAY (CH); High plasticity, medium toughness, fine sand, occasional organics (Fill)	
525	5		60	S2	0-1-1 (N=2)		*At 5.0 feet grades to scattered woody organics.*	
			100	S3	1-1-1 (N=2)	SC	Very loose, moist to wet, gray, CLAYEY SAND (SC); Fine to medium sand, medium plasticity and medium toughness fines, occasional 1-inch sandy lenses of slow dilatancy (Fill)	
520	10		87	S4	0-16-49 (N=65)	SM	Medium dense, wet, red-brown, SILTY SAND (SM); Fine to medium sand, low plasticity fines, slow dilatancy (Fill)	At 11.0 feet very rough , very slow drilling.
			0	S5	50/0" (Refusal)		Dark gray basalt chips in cuttings (Little Butte Volcanic Series - Tholeiitic Basalt)	Borehole completed at 12.5ft. below ground surface (bgs).
515	15							
510	20							
505	25							
500	30							

PENETRATION RESISTANCE BLOWS/FT: BLOWS/FT 20 40 60 80; MC; LL/PL

BACKFILL INFORMATION

McMILLEN JACOBS ASSOCIATES

Boring B-3

Sheet 1 of 1

Project: Sweet Home WWTP Schematic Design
Project Location: Sweet Home, OR
Project Number: 5834.0

Log of Boring B-4

Date(s) Drilled: 05/01/2018	Geotechnical Consultant: McMillen Jacobs Associates	Logged By: J. Irizarry	Checked By: K. Elliott
Drilling Method/ Rig Type: Mud Rotary/CME 75	Drilling Contractor: Western States Soil Conservation, Inc.	Total Depth of Borehole: 5.8 ft	
Hole Diameter: 4.00 in	Hammer Weight/Drop (lb/in.)/Type: 140 lb / 30 in / Automatic	Ground Surface Elevation/Datum: 538.6 ft	
Location: Survey	Coordinates: 7616842.35 E, 275514.57 N	Elevation Source: Site Survey	

ELEV. (FT) / WATER LEVEL / DEPTH (FT)	SAMPLE TYPE	RECOVERY (%)	SAMPLE #	BLOW COUNTS	PENETRATION RESISTANCE BLOWS/FT (BLOWS/FT 20 40 60 80; MC; LL/PL)	GRAPHIC LOG	USCS	MATERIAL DESCRIPTION	BACKFILL INFORMATION	REMARKS AND TESTS
5/2/2018 1							SM	Medium dense, moist to wet, dark gray, SILTY SAND with Gravel (SM); Fine to medium sand, fine angular gravel, low plasticity fines, slow dilatancy, scattered organics (Fill)		
		20	S1	7-10-7 (N=17)						
534 5		120	S2	28-50/3" (Refusal)			GM	Very dense, moist, gray and orange, SILTY GRAVEL with Sand (GM); Fine to coarse gravel, fine to coarse sand, medium plasticity fines (Fill)		At 4.5 feet very slow, very rough drilling.
529 10										Borehole completed at 5.8ft. below ground surface (bgs).
524 15										
519 20										
514 25										
509 30										

McMILLEN JACOBS ASSOCIATES

Boring B-4

Sheet 1 of 1

Project: Sweet Home WWTP Schematic Design
Project Location: Sweet Home, OR
Project Number: 5834.0

Log of Boring B-5

Date(s) Drilled: 05/02/2018	Geotechnical Consultant: McMillen Jacobs Associates	Logged By: J. Irizarry	Checked By: K. Elliott
Drilling Method/ Rig Type: Mud Rotary and HQ Wireline/CME 75	Drilling Contractor: Western States Soil Conservation, Inc.	Total Depth of Borehole: 23.0 ft	
Hole Diameter: 4.00 in	Hammer Weight/Drop (lb/in.)/Type: 140 lb / 30 in / Automatic	Ground Surface Elevation/Datum: 528.8 ft	
Location: Survey	Coordinates: 7617036.16 E, 275580.52 N	Elevation Source: Site Survey	

ELEV. (FT) / WATER LEVEL / DEPTH (FT)	SAMPLE TYPE	RECOVERY (%)	SAMPLE #	BLOW COUNTS	PENETRATION RESISTANCE BLOWS/FT (BLOWS/FT 20 40 60 80; MC LL/PL)	GRAPHIC LOG	USCS	MATERIAL DESCRIPTION	BACKFILL INFORMATION	REMARKS AND TESTS
		53	S1	1-5-6 (N=11)			ML	Stiff, moist, gray, Sandy SILT (ML); Low plasticity, medium toughness, fine sand, trace coarse sand, occasional organics (Fill)		
524 / 5		53	S2	1-1-1 (N=2)			ML	Soft, moist to wet, green to red-brown, Sandy SILT (ML); Low plasticity, low toughness, fine to medium sand, occasional organics (Fill)		
10/29/2019 / 519 / 10		73	S3	1-4-11 (N=15)			ML	Stiff, wet, gray and red-brown, Sandy SILT (ML); Low plasticity, medium toughness fines, fine sand, trace medium and coarse sand, occasional organics (Fill)		At 8.5 feet, more difficulty drilling, driller remarks likely weathered rock.
		100	RUN 1					Run 1: 9.0 - 13.0 feet, RQD = 75%; BASALT, very strong (R5), slightly weathered to fresh, moderately to highly fractured, planar and curved, smooth to rough, high angle and sub-horizontal narrow joints (Little Butte Volcanic Series - Tholeiitic Basalt)		At 9.0 feet, switch to rock coring. RQD = 75%. From 11.7 feet to 12.4 feet UCS = 29,919 psi. At 13.0 feet RQD = 86%.
514 / 15		100	RUN 2					*Run 2: 13.0-18.0 feet, RQD = 86%, addition of irregular joints and < 0.1" thick light blue green staining/coating of occasional joints.*		
509 / 20		100	RUN 3					*Run 3: 18.0-23.0 feet, RQD = 74%, grade to medium strong based on testing*		At 18.0 feet RQD = 74%. From 18.0 feet to 19.0 feet UCS = 6,932 psi.
504 / 25										Borehole completed at 23ft. below ground surface (bgs).
499 / 30										

McMILLEN JACOBS ASSOCIATES

Boring B-5

Sheet 1 of 1

Project: Sweet Home WWTP Schematic Design
Project Location: Sweet Home, OR
Project Number: 5834.0

Log of Boring P-01

Date(s) Drilled: 04/30/2018	Geotechnical Consultant: McMillen Jacobs Associates	Logged By: J. Irizarry	Checked By: K. Elliott
Drilling Method/ Rig Type: 4-1/4" Hollow stem auger/CME 75	Drilling Contractor: Western States Soil Conservation, Inc.	Total Depth of Borehole: 11.0 ft	
Hole Diameter: 4.25 in	Hammer Weight/Drop (lb/in.)/Type	Ground Surface Elevation/Datum: 517.3 ft	
Location: Survey	Coordinates: 7617295.47 E, 275346.48 N	Elevation Source: Site Survey	

ELEV. (FT) / WATER LEVEL / DEPTH (FT)	SAMPLE TYPE	RECOVERY (%)	SAMPLE #	BLOW COUNTS	PENETRATION RESISTANCE BLOWS/FT (BLOWS/FT 20 40 60 80; MC; LL/PL)	GRAPHIC LOG	USCS	MATERIAL DESCRIPTION	BACKFILL INFORMATION	REMARKS AND TESTS
								Asphalt (Pavement)		
							GM	Dense, gray, Silty GRAVEL (GM); (Base Aggregate)		
513 / 5			S1				CL	Very soft to soft, moist, brown, LEAN CLAY with Sand (CL); Low plasticity, medium toughness, fine sand, trace medium sand, occasional organics (Fill)		At 9.0 feet driller remarks that the material stiffens.
508 / 10							GC	Very loose to loose, moist to wet, gray brown, CLAYEY GRAVEL with Sand (GC); Fine to coarse angular basalt gravel, fine to coarse sand, low plasticity fines (Fill)		At 10.0 feet, driller remarks that the material feels like rock but the auger is able to continue to spin. Auger refusal at 11 feet.
503 / 15										Borehole completed at 11ft. below ground surface (bgs). Grab samples obtained from auger cuttings during exploration. Reported relative density and apparent consistency based on reactions while drilling.
498 / 20										
493 / 25										
488 / 30										

McMILLEN JACOBS ASSOCIATES

Boring P-01

Sheet 1 of 1

Project: Sweet Home WWTP Schematic Design
Project Location: Sweet Home, OR
Project Number: 5834.0

Log of Boring P-02

Date(s) Drilled: 05/01/2018 - 01/05/2018	Geotechnical Consultant: McMillen Jacobs Associates	Logged By: J. Irizarry	Checked By: K. Elliott
Drilling Method/ Rig Type: 4-1/4" Hollow stem auger/CME 75	Drilling Contractor: Western States Soil Conservation, Inc.	Total Depth of Borehole: 11.5 ft	
Hole Diameter: 4.25 in	Hammer Weight/Drop (lb/in.)/Type	Ground Surface Elevation/Datum: 526.1 ft	
Location: Survey	Coordinates: 7617102.54 E, 275424.97 N	Elevation Source: Site Survey	

ELEV. (FT) / WATER LEVEL / DEPTH (FT)	SAMPLE TYPE	RECOVERY (%)	SAMPLE #	BLOW COUNTS	PENETRATION RESISTANCE BLOWS/FT (BLOWS/FT 20 40 60 80; MC; LL/PL)	GRAPHIC LOG	USCS	MATERIAL DESCRIPTION	BACKFILL INFORMATION	REMARKS AND TESTS
522 / 5 / 517 / 10							CL	Soft to very soft, moist, brown to light brown, Sandy LEAN CLAY with Gravel (CL); Low plasticity, fine angular gravel, occasional organics (Fill)		At 2.5 feet very slow, very rough drilling. Auger refusal at 11.5 feet.
512 / 15 / 507 / 20 / 502 / 25 / 497 / 30										Borehole completed at 11.5ft. below ground surface (bgs). Grab samples obtained from auger cuttings during exploration. Reported relative density and apparent consistency based on reactions while drilling.

McMILLEN JACOBS ASSOCIATES

Boring P-02

Sheet 1 of 1

Project: Sweet Home WWTP Schematic Design
Project Location: Sweet Home, OR
Project Number: 5834.0

Log of Boring P-03

Date(s) Drilled: 04/30/2018	Geotechnical Consultant: McMillen Jacobs Associates	Logged By: J. Irizarry	Checked By: K. Elliott
Drilling Method/ Rig Type: 4-1/4" Hollow stem auger/CME 75	Drilling Contractor: Western States Soil Conservation, Inc.	Total Depth of Borehole: 16.0 ft	
Hole Diameter: 4.25 in	Hammer Weight/Drop (lb/in.)/Type	Ground Surface Elevation/Datum: 530.4 ft	
Location: Survey	Coordinates: 7617036.27 E, 275432.54 N	Elevation Source: Site Survey	

ELEV. (FT) / WATER LEVEL / DEPTH (FT)	SAMPLE TYPE	RECOVERY (%)	SAMPLE #	BLOW COUNTS	PENETRATION RESISTANCE BLOWS/FT (BLOWS/FT 20 40 60 80; MC; LL/PL)	GRAPHIC LOG	USCS	MATERIAL DESCRIPTION	BACKFILL INFORMATION	REMARKS AND TESTS
							GM	Asphalt (Pavement) Base rock (Fill)		
526 / 5							CL	Very soft to soft, moist, dark gray-brown, LEAN CLAY with Sand (CL); Fine sand (Fill)		
521 / 10 (4/30/2018)							CL	Very soft to soft, moist to wet, gray, Sandy LEAN CLAY (CL); Medium plasticity, fine to medium sand (Fill) *At 13.0 feet, grades to brown, moist to wet, decrease in sand content.*		
516 / 15										Auger refusal at 16 feet.
511 / 20										Borehole completed at 16ft. below ground surface (bgs). Grab samples obtained from auger cuttings during exploration. Reported relative density and apparent consistency based on reactions while drilling.
506 / 25										
501 / 30										

McMILLEN JACOBS ASSOCIATES

Boring P-03

Sheet 1 of 1

Project: Sweet Home WWTP Schematic Design
Project Location: Sweet Home, OR
Project Number: 5834.0

Log of Boring P-04

Date(s) Drilled: 04/30/2018 - 04/30/2018	Geotechnical Consultant: McMillen Jacobs Associates	Logged By: J. Irizarry	Checked By: K. Elliott
Drilling Method/ Rig Type: 4-1/4" Hollow stem auger/CME 75	Drilling Contractor: Western States Soil Conservation, Inc.	Total Depth of Borehole: 7.5 ft	
Hole Diameter: 4.25 in	Hammer Weight/Drop (lb/in.)/Type	Ground Surface Elevation/Datum: 530.8 ft	
Location: Survey	Coordinates: 7616984.89 E, 275442.28 N	Elevation Source: Site Survey	

ELEV. (FT) / WATER LEVEL / DEPTH (FT)	SAMPLE TYPE	RECOVERY (%)	SAMPLE #	BLOW COUNTS	PENETRATION RESISTANCE BLOWS/FT (BLOWS/FT 20 40 60 80; MC; LL/PL)	GRAPHIC LOG	USCS	MATERIAL DESCRIPTION	BACKFILL INFORMATION	REMARKS AND TESTS
								Asphalt - 5" thick (Pavement)		
							GM	Dense, moist, gray Silty GRAVEL (GM); Fine to coarse angular gravel, low plasticity silt, 5 inches thick (Base Aggregate)		
							CL			
			S1				OL/ OH	Very soft to soft, moist, dark gray-brown, LEAN CLAY (CL); (Fill)		At 2.5 feet driller remarks that material becomes stiffer, woody material began smoking so driller added water to hole, very slow drilling. Organic chemical odor in the wood fiber of Sample 1.
								Hard, moist, brown, Organic Soil with Sand (OL/OH); Frequent hard wood in clay (Fill)		
526 / 5							CL	Very soft to soft, moist, green-brown with brown-orange mottles, LEAN CLAY (CL); Low plasticity, fine sand, trace medium sand (Fill)		
			S2							Auger refusal at 7.5 feet.
521 / 10										Borehole completed at 7.5ft. below ground surface (bgs). Grab samples obtained from auger cuttings during exploration. Reported relative density and apparent consistency based on reactions while drilling.
516 / 15										
511 / 20										
506 / 25										
501 / 30										

McMILLEN JACOBS ASSOCIATES

Boring P-04

Sheet 1 of 1

Project: Sweet Home WWTP Schematic Design
Project Location: Sweet Home, OR
Project Number: 5834.0

Log of Boring P-05

Date(s) Drilled: 05/01/2018 - 05/01/2018	Geotechnical Consultant: McMillen Jacobs Associates	Logged By: J. Irizarry	Checked By: K. Elliott
Drilling Method/ Rig Type: 4-1/4" Hollow stem auger/CME 75	Drilling Contractor: Western States Soil Conservation, Inc.	Total Depth of Borehole: 3.5 ft	
Hole Diameter: 4.25 in	Hammer Weight/Drop (lb/in.)/Type	Ground Surface Elevation/Datum: 533.1 ft	
Location: Survey	Coordinates: 7616928.58 E, 275458.29 N	Elevation Source: Site Survey	

ELEV. (FT) / WATER LEVEL / DEPTH (FT)	SAMPLE TYPE	RECOVERY (%)	SAMPLE #	BLOW COUNTS	PENETRATION RESISTANCE BLOWS/FT (BLOWS/FT 20 40 60 80; MC; LL/PL)	GRAPHIC LOG	USCS	MATERIAL DESCRIPTION	BACKFILL INFORMATION	REMARKS AND TESTS
							CL	Very soft to soft, moist, brown to light brown, LEAN CLAY with Sand (CL); Low plasticity, medium toughness, fine sand, trace coarse angular gravel, occasional organics (Fill)		Auger refusal at 3.5 feet.
529 / 5										Borehole completed at 3.5ft. below ground surface (bgs).
524 / 10										Grab samples obtained from auger cuttings during exploration. Reported relative density and apparent consistency based on reactions while drilling.
519 / 15										
514 / 20										
509 / 25										
504 / 30										

McMILLEN JACOBS ASSOCIATES

Boring P-05

Sheet 1 of 1

Project: Sweet Home WWTP Schematic Design
Project Location: Sweet Home, OR
Project Number: 5834.0

Log of Boring P-06

Date(s) Drilled: 04/30/2018 - 04/30/2018	Geotechnical Consultant: McMillen Jacobs Associates	Logged By: J. Irizarry	Checked By: K. Elliott
Drilling Method/ Rig Type: 4-1/4" Hollow stem auger/CME 75	Drilling Contractor: Western States Soil Conservation, Inc.	Total Depth of Borehole: 3.5 ft	
Hole Diameter: 4.25 in	Hammer Weight/Drop (lb/in.)/Type	Ground Surface Elevation/Datum: 536.2 ft	
Location: Survey	Coordinates: 7616858.52 E, 275586.88 N	Elevation Source: Site Survey	

ELEV. (FT) / WATER LEVEL / DEPTH (FT)	SAMPLE TYPE	RECOVERY (%)	SAMPLE #	BLOW COUNTS	PENETRATION RESISTANCE BLOWS/FT (BLOWS/FT 20 40 60 80; MC; LL/PL)	GRAPHIC LOG	USCS	MATERIAL DESCRIPTION	BACKFILL INFORMATION	REMARKS AND TESTS
			S1				CL	Stiff, moist to wet, brown, LEAN CLAY (CL); Low plasticity, medium toughness, trace fine to medium sand, fine gravel, occasional woody organics (Fill)		Auger refusal at 3.5 feet.
532 / 5										Borehole completed at 3.5ft. below ground surface (bgs).
527 / 10										Grab samples obtained from auger cuttings during exploration. Reported relative density and apparent consistency based on reactions while drilling.
522 / 15										
517 / 20										
512 / 25										
507 / 30										

McMILLEN JACOBS ASSOCIATES

Boring P-06

Sheet 1 of 1

Project: Sweet Home WWTP Schematic Design
Project Location: Sweet Home, OR
Project Number: 5834.0

Log of Boring P-07

Date(s) Drilled: 04/30/2018	Geotechnical Consultant: McMillen Jacobs Associates	Logged By: J. Irizarry	Checked By: K. Elliott
Drilling Method/ Rig Type: 4-1/4" Hollow stem auger/CME 75	Drilling Contractor: Western States Soil Conservation, Inc.	Total Depth of Borehole: 2.5 ft	
Hole Diameter: 4.25 in	Hammer Weight/Drop (lb/in.)/Type	Ground Surface Elevation/Datum: 538.0 ft	
Location: Survey	Coordinates: 7616789.32 E, 275532.46 N	Elevation Source: Site Survey	

ELEV. (FT)	DEPTH (FT)	SAMPLE TYPE	RECOVERY (%)	SAMPLE #	BLOW COUNTS	PENETRATION RESISTANCE BLOWS/FT (BLOWS/FT 20 40 60 80; MC; LL/PL)	GRAPHIC LOG	USCS	MATERIAL DESCRIPTION	BACKFILL INFORMATION	REMARKS AND TESTS
								GM	Very loose to loose, moist, dark brown, SILTY GRAVEL with Sand (GM); Angular fine to coarse gravel with cobbles, low plasticity fines (Fill)		Auger refusal at 2.5 feet.
533	5										Borehole completed at 2.5ft. below ground surface (bgs). Grab samples obtained from auger cuttings during exploration. Reported relative density and apparent consistency based on reactions while drilling.
528	10										
523	15										
518	20										
513	25										
508	30										

McMILLEN JACOBS ASSOCIATES

Boring P-07

Sheet 1 of 1

Project: Sweet Home WWTP Schematic Design
Project Location: Sweet Home, OR
Project Number: 5834.0

Log of Boring P-08

Date(s) Drilled: 04/30/2018	Geotechnical Consultant: McMillen Jacobs Associates	Logged By: J. Irizarry	Checked By: K. Elliott
Drilling Method/ Rig Type: 4-1/4" Hollow stem auger/CME 75	Drilling Contractor: Western States Soil Conservation, Inc.	Total Depth of Borehole: 7.5 ft	
Hole Diameter: 4.25 in	Hammer Weight/Drop (lb/in.)/Type	Ground Surface Elevation/Datum: 535.2 ft	
Location: Survey	Coordinates: 7616905.96 E, 275577.01 N	Elevation Source: Site Survey	

ELEV. (FT) WATER LEVEL DEPTH (FT)	SAMPLE TYPE	RECOVERY (%)	SAMPLE #	BLOW COUNTS	PENETRATION RESISTANCE BLOWS/FT (BLOWS/FT 20 40 60 80; MC; LL/PL)	GRAPHIC LOG	USCS	MATERIAL DESCRIPTION	BACKFILL INFORMATION	REMARKS AND TESTS
531 / 5			S1				GM	Very loose to loose, moist, dark brown, SILTY GRAVEL with Sand (GM); Fine to coarse angular to subangular gravel, fine to coarse sand, low plasticity fines, occasional woody organics (Fill)		Slight petroleum odor while drilling. Auger refusal at 7.5 feet.
526 / 10										Borehole completed at 7.5ft. below ground surface (bgs). Grab samples obtained from auger cuttings during exploration. Reported relative density and apparent consistency based on reactions while drilling.
521 / 15										
516 / 20										
511 / 25										
506 / 30										

McMILLEN JACOBS ASSOCIATES

Boring P-08

Sheet 1 of 1

Project: Sweet Home WWTP Schematic Design
Project Location: Sweet Home, OR
Project Number: 5834.0

Log of Boring P-09

Date(s) Drilled: 05/01/2018	Geotechnical Consultant: McMillen Jacobs Associates	Logged By: J. Irizarry	Checked By: K. Elliott
Drilling Method/ Rig Type: 4-1/4" Hollow stem auger/CME 75	Drilling Contractor: Western States Soil Conservation, Inc.	Total Depth of Borehole: 4.0 ft	
Hole Diameter: 4.25 in	Hammer Weight/Drop (lb/in.)/Type	Ground Surface Elevation/Datum: 530.5 ft	
Location: Survey	Coordinates: 7616966.80 E, 275594.59 N	Elevation Source: Site Survey	

ELEV. (FT) / WATER LEVEL / DEPTH (FT)	SAMPLE TYPE	RECOVERY (%)	SAMPLE #	BLOW COUNTS	PENETRATION RESISTANCE BLOWS/FT (BLOWS/FT 20 40 60 80; MC; LL/PL)	GRAPHIC LOG	USCS	MATERIAL DESCRIPTION	BACKFILL INFORMATION	REMARKS AND TESTS
5/2/2018			S1				CL	Moist, gray-brown, Sandy LEAN CLAY with Gravel (CL); Low plasticity, fine to coarse sand, fine angular gravel, scattered organics (Fill)		Slight petroleum odor. Auger refusal at 4 feet.
526 / 5										Borehole completed at 4ft. below ground surface (bgs). Grab samples obtained from auger cuttings during exploration. Reported relative density and apparent consistency based on reactions while drilling.
521 / 10										
516 / 15										
511 / 20										
506 / 25										
501 / 30										

McMILLEN JACOBS ASSOCIATES

Boring P-09

Sheet 1 of 1

Project: Sweet Home WWTP Schematic Design
Project Location: Sweet Home, OR
Project Number: 5834.0

Log of Boring P-10

Date(s) Drilled: 04/30/2018	Geotechnical Consultant: McMillen Jacobs Associates	Logged By: J. Irizarry	Checked By: K. Elliott
Drilling Method/ Rig Type: 4-1/4" Hollow stem auger/CME 75	Drilling Contractor: Western States Soil Conservation, Inc.	Total Depth of Borehole: 5.5 ft	
Hole Diameter: 4.25 in	Hammer Weight/Drop (lb/in.)/Type	Ground Surface Elevation/Datum: 530.1 ft	
Location: Survey	Coordinates: 7616963.18 E, 275547.22 N	Elevation Source: Site Survey	

ELEV. (FT)	DEPTH (FT)	SAMPLE TYPE	RECOVERY (%)	SAMPLE #	BLOW COUNTS	USCS	MATERIAL DESCRIPTION	BACKFILL INFORMATION	REMARKS AND TESTS
						GM	Very loose to loose, moist, brown, SILTY GRAVEL with Sand (GM); Fine to coarse gravel, fine and coarse sand, low plasticity. (Fill)		
526	5					CL	Very soft to soft, wet, gray-brown, LEAN CLAY with Sand (CL); Low plasticity, fine sand, trace angular fine angular gravel. (Fill)		Auger refusal at 5.5 feet.
521	10								Borehole completed at 5.5ft. below ground surface (bgs). Grab samples obtained from auger cuttings during exploration. Reported relative density and apparent consistency based on reactions while drilling.
516	15								
511	20								
506	25								
501	30								

PENETRATION RESISTANCE BLOWS/FT: BLOWS/FT 20 40 60 80; MC; LL/PL

GRAPHIC LOG

5/1/2018 1

McMILLEN JACOBS ASSOCIATES

Boring P-10

Sheet 1 of 1

Project: Sweet Home WWTP Schematic Design
Project Location: Sweet Home, OR
Project Number: 5834.0

Log of Boring P-11

Date(s) Drilled: 04/30/2018 - 04/30/2018	Geotechnical Consultant: McMillen Jacobs Associates	Logged By: J. Irizarry	Checked By: K. Elliott
Drilling Method/ Rig Type: 4-1/4" Hollow stem auger/CME 75	Drilling Contractor: Western States Soil Conservation, Inc.	Total Depth of Borehole: 5.5 ft	
Hole Diameter: 4.25 in	Hammer Weight/Drop (lb/in.)/Type	Ground Surface Elevation/Datum: 529.8 ft	
Location: Survey	Coordinates: 7617007.94 E, 275561.88 N	Elevation Source: Site Survey	

ELEV. (FT)	DEPTH (FT)	WATER LEVEL	SAMPLE TYPE	RECOVERY (%)	SAMPLE #	BLOW COUNTS	PENETRATION RESISTANCE BLOWS/FT (BLOWS/FT 20 40 60 80; MC; LL/PL)	GRAPHIC LOG	USCS	MATERIAL DESCRIPTION	BACKFILL INFORMATION	REMARKS AND TESTS
525	5	5/1/2018 1			S1				GC	Very loose to loose, moist to wet, brown to gray brown, Clayey GRAVEL with Sand (GC); Fine to coarse gravel, fine to coarse sand (Fill)		Auger refusal at 5.5 feet.
520	10											Borehole completed at 5.5ft. below ground surface (bgs). Grab samples obtained from auger cuttings during exploration. Reported relative density and apparent consistency based on reactions while drilling.
515	15											
510	20											
505	25											
500	30											

McMILLEN JACOBS ASSOCIATES

Boring P-11

Sheet 1 of 1

Project: Sweet Home WWTP Schematic Design
Project Location: Sweet Home, OR
Project Number: 5834.0

Log of Boring P-12

Date(s) Drilled: 04/30/2018	Geotechnical Consultant: McMillen Jacobs Associates	Logged By: J. Irizarry	Checked By: K. Elliott
Drilling Method/ Rig Type: 4-1/4" Hollow stem auger/CME 75	Drilling Contractor: Western States Soil Conservation, Inc.	Total Depth of Borehole: 5.0 ft	
Hole Diameter: 4.25 in	Hammer Weight/Drop (lb/in.)/Type	Ground Surface Elevation/Datum: 526.4 ft	
Location: Survey	Coordinates: 7617070.84 E, 275609.56 N	Elevation Source: Site Survey	

ELEV. (FT) / WATER LEVEL / DEPTH (FT)	SAMPLE TYPE	RECOVERY (%)	SAMPLE #	BLOW COUNTS	PENETRATION RESISTANCE BLOWS/FT (BLOWS/FT 20 40 60 80; MC; LL/PL)	GRAPHIC LOG	USCS	MATERIAL DESCRIPTION	BACKFILL INFORMATION	REMARKS AND TESTS
522 / 5			S1				CL	Very soft to soft, moist, brown, Gravelly LEAN CLAY with Sand (CL); Low plasticity, fine to coarse angular gravel, fine to coarse sand (Fill)		Auger refusal at 5 feet.
517 / 10										Borehole completed at 5ft. below ground surface (bgs). Grab samples obtained from auger cuttings during exploration. Reported relative density and apparent consistency based on reactions while drilling.
512 / 15										
507 / 20										
502 / 25										
497 / 30										

McMILLEN JACOBS ASSOCIATES

Boring P-12

Sheet 1 of 1

Project: Sweet Home WWTP Schematic Design
Project Location: Sweet Home, OR
Project Number: 5834.0

Log of Boring P-13

Date(s) Drilled: 04/30/2018 - 04/30/2018	Geotechnical Consultant: McMillen Jacobs Associates	Logged By: J. Irizarry	Checked By: K. Elliott
Drilling Method/ Rig Type: 4-1/4" Hollow stem auger/CME 75	Drilling Contractor: Western States Soil Conservation, Inc.	Total Depth of Borehole: 8.5 ft	
Hole Diameter: 4.25 in	Hammer Weight/Drop (lb/in.)/Type	Ground Surface Elevation/Datum: 523.6 ft	
Location: Survey	Coordinates: 7617121.16 E, 275620.34 N	Elevation Source: Site Survey	

ELEV. (FT) / WATER LEVEL / DEPTH (FT)	SAMPLE TYPE	RECOVERY (%)	SAMPLE #	BLOW COUNTS	PENETRATION RESISTANCE BLOWS/FT (BLOWS/FT 20 40 60 80; MC; LL/PL)	GRAPHIC LOG	USCS	MATERIAL DESCRIPTION	BACKFILL INFORMATION	REMARKS AND TESTS
519 / 5 / 5/6/2018 1							CL	Very soft to soft, moist to wet, dark brown to gray brown, Sandy LEAN CLAY with Gravel (CL); Low plasticity, fine to coarse sand, fine angular gravel (Fill)		Loose gravelly material begins caving at the ground surface. Auger refusal at 8.5 feet.
514 / 10										Borehole completed at 8.5ft. below ground surface (bgs). Grab samples obtained from auger cuttings during exploration. Reported relative density and apparent consistency based on reactions while drilling.
509 / 15										
504 / 20										
499 / 25										
494 / 30										

McMILLEN JACOBS ASSOCIATES

Boring P-13

Sheet 1 of 1

Project: Sweet Home WWTP Schematic Design
Project Location: Sweet Home, OR
Project Number: 5834.0

Log of Boring P-14

Date(s) Drilled: 05/01/2018	Geotechnical Consultant: McMillen Jacobs Associates	Logged By: J. Irizarry	Checked By: K. Elliott
Drilling Method/ Rig Type: 4-1/4" Hollow stem auger/CME 75	Drilling Contractor: Western States Soil Conservation, Inc.	Total Depth of Borehole: 5.5 ft	
Hole Diameter: 4.25 in	Hammer Weight/Drop (lb/in.)/Type	Ground Surface Elevation/Datum: 521.7 ft	
Location: Survey	Coordinates: 7617149.97 E, 275571.01 N	Elevation Source: Site Survey	

ELEV. (FT) / WATER LEVEL / DEPTH (FT)	SAMPLE TYPE	RECOVERY (%)	SAMPLE #	BLOW COUNTS	PENETRATION RESISTANCE BLOWS/FT (BLOWS/FT 20 40 60 80; MC; LL/PL)	GRAPHIC LOG	USCS	MATERIAL DESCRIPTION	BACKFILL INFORMATION	REMARKS AND TESTS
517 / 5			S1				CL	Very soft to soft, wet, gray-brown, Sandy LEAN CLAY with Gravel (CL); Low plasticity, fine to coarse sand, fine angular gravel (Fill)		Observed groundwater at approximately 4.0 feet water present, difficult to measure due to gravel.
										Auger refusal at 5.5 feet.
512 / 10										Borehole completed at 5.5ft. below ground surface (bgs).
										Grab samples obtained from auger cuttings during exploration. Reported relative density and apparent consistency based on reactions while drilling.
507 / 15										
502 / 20										
497 / 25										
492 / 30										

McMILLEN JACOBS ASSOCIATES

Boring P-14

Sheet 1 of 1

Project: Sweet Home WWTP Schematic Design
Project Location: Sweet Home, OR
Project Number: 5834.0

Log of Boring P-15

Date(s) Drilled: 04/30/2018	Geotechnical Consultant: McMillen Jacobs Associates	Logged By: J. Irizarry	Checked By: K. Elliott
Drilling Method/ Rig Type: 4-1/4" Hollow stem auger/CME 75	Drilling Contractor: Western States Soil Conservation, Inc.	Total Depth of Borehole: 2.5 ft	
Hole Diameter: 4.25 in	Hammer Weight/Drop (lb/in.)/Type	Ground Surface Elevation/Datum: 519.1 ft	
Location: Survey	Coordinates: 7617194.34 E, 275628.88 N	Elevation Source: Site Survey	

ELEV. (FT) / WATER LEVEL / DEPTH (FT)	SAMPLE TYPE	RECOVERY (%)	SAMPLE #	BLOW COUNTS	PENETRATION RESISTANCE BLOWS/FT (BLOWS/FT 20 40 60 80; MC; LL/PL)	GRAPHIC LOG	USCS	MATERIAL DESCRIPTION	BACKFILL INFORMATION	REMARKS AND TESTS
							GC	Very loose to loose, moist to wet, brown, CLAYEY GRAVEL with Sand (GC); Fine angular gravel, fine to coarse sand (Fill)		Auger refusal at 2.5 feet.
4/30/2018										Borehole completed at 2.5ft. below ground surface (bgs).
515 / 5										Grab samples obtained from auger cuttings during exploration. Reported relative density and apparent consistency based on reactions while drilling.
510 / 10										
505 / 15										
500 / 20										
495 / 25										
490 / 30										

McMILLEN JACOBS ASSOCIATES

Boring P-15

Sheet 1 of 1

Project: Sweet Home WWTP Schematic Design
Project Location: Sweet Home, OR
Project Number: 5834.0

Log of Boring P-16

Date(s) Drilled: 10/29/2019	Geotechnical Consultant: McMillen Jacobs Associates	Logged By: L. Ferguson	Checked By: J. Quinn
Drilling Method/ Rig Type: Air Track Probe/Furukawa HCR900	Drilling Contractor: McCallum Rock Drilling	Total Depth of Borehole: 26.0 ft	
Hole Diameter: 3.00 in	Hammer Weight/Drop (lb/in.)/Type: N/A	Ground Surface Elevation/Datum: 517.1 ft	
Location: Sweet Home WWTP	Coordinates: 7617309.79 E, 275352.81 N	Elevation Source: Site Survey	

ELEV. (FT) / WATER LEVEL / DEPTH (FT)	SAMPLE TYPE	RECOVERY (%)	SAMPLE #	BLOW COUNTS	PENETRATION RESISTANCE BLOWS/FT (BLOWS/FT 20 40 60 80; MC; LL/PL)	GRAPHIC LOG	USCS	MATERIAL DESCRIPTION	BACKFILL INFORMATION	REMARKS AND TESTS
								Asphalt (Pavement)		
							CL	Soft, moist, brown, CLAY (CL) (Fill)		
513 / 5										
508 / 10										
								BASALT, hard, gray (Little Butte Volcanic Series - Tholeiitic Basalt)		
503 / 15										
498 / 20										
493 / 25										
488 / 30										Borehole completed at 26ft. below ground surface (bgs).

McMILLEN JACOBS ASSOCIATES

Boring P-16

Sheet 1 of 1

Project: Sweet Home WWTP Schematic Design
Project Location: Sweet Home, OR
Project Number: 5834.0

Log of Boring P-17

Date(s) Drilled: 10/29/2019	Geotechnical Consultant: McMillen Jacobs Associates	Logged By: L. Ferguson	Checked By: J. Quinn
Drilling Method/ Rig Type: Air Track Probe/Furukawa HCR900	Drilling Contractor: McCallum Rock Drilling	Total Depth of Borehole: 11.0 ft	
Hole Diameter: 3.00 in	Hammer Weight/Drop (lb/in.)/Type: N/A	Ground Surface Elevation/Datum: 516.4 ft	
Location: Sweet Home WWTP	Coordinates: 7617358.56 E, 275414.92 N	Elevation Source: Site Survey	

ELEV. (FT)	DEPTH (FT)	USCS	MATERIAL DESCRIPTION	REMARKS AND TESTS
			Asphalt (Pavement)	
		CL	Soft, moist, brown, CLAY (CL) (Fill)	
512	5			
			Basalt, hard, gray (Little Butte Volcanic Series - Tholeiitic Basalt)	
507	10			
				Borehole completed at 11ft. below ground surface (bgs).
502	15			
497	20			
492	25			
487	30			

SAMPLE TYPE | RECOVERY (%) | SAMPLE # | BLOW COUNTS | PENETRATION RESISTANCE BLOWS/FT (BLOWS/FT 20 40 60 80; MC; LL/PL) | GRAPHIC LOG | BACKFILL INFORMATION

McMILLEN JACOBS ASSOCIATES

Boring P-17

Sheet 1 of 1

Project: Sweet Home WWTP Schematic Design
Project Location: Sweet Home, OR
Project Number: 5834.0

Log of Boring P-18

Date(s) Drilled: 10/29/2019	Geotechnical Consultant: McMillen Jacobs Associates	Logged By: L. Ferguson	Checked By: J. Quinn
Drilling Method/ Rig Type: Air Track Probe/Furukawa HCR900	Drilling Contractor: McCallum Rock Drilling	Total Depth of Borehole: 15.0 ft	
Hole Diameter: 3.00 in	Hammer Weight/Drop (lb/in.)/Type: N/A	Ground Surface Elevation/Datum: 518.5 ft	
Location: Sweet Home WWTP	Coordinates: 7617209.77 E, 275451.86 N	Elevation Source: Site Survey	

ELEV. (FT)	DEPTH (FT)	WATER LEVEL	SAMPLE TYPE	RECOVERY (%)	SAMPLE #	BLOW COUNTS	PENETRATION RESISTANCE BLOWS/FT (BLOWS/FT 20 40 60 80; MC; LL/PL)	GRAPHIC LOG	USCS	MATERIAL DESCRIPTION	BACKFILL INFORMATION	REMARKS AND TESTS
514	5								CL	Soft, moist, brown, CLAY (CL) (Fill)		
509	10									BASALT, hard, gray (Little Butte Volcanic Series - Tholeiitic Basalt)		
504	15											Borehole completed at 15ft. below ground surface (bgs).
499	20											
494	25											
489	30											

McMILLEN JACOBS ASSOCIATES

Boring P-18

Sheet 1 of 1

Project: Sweet Home WWTP Schematic Design
Project Location: Sweet Home, OR
Project Number: 5834.0

Log of Boring P-19

Date(s) Drilled: 10/29/2019	Geotechnical Consultant: McMillen Jacobs Associates	Logged By: L. Ferguson	Checked By: J. Quinn
Drilling Method/ Rig Type: Air Track Probe/Furukawa HCR900	Drilling Contractor: McCallum Rock Drilling	Total Depth of Borehole: 20.0 ft	
Hole Diameter: 3.00 in	Hammer Weight/Drop (lb/in.)/Type: N/A	Ground Surface Elevation/Datum: 518.0 ft	
Location: Sweet Home WWTP	Coordinates: 7617228.61 E, 275499.48 N	Elevation Source: Site Survey	

ELEV. (FT) / WATER LEVEL / DEPTH (FT)	SAMPLE TYPE	RECOVERY (%)	SAMPLE #	BLOW COUNTS	PENETRATION RESISTANCE BLOWS/FT (BLOWS/FT 20 40 60 80; MC; LL/PL)	GRAPHIC LOG	USCS	MATERIAL DESCRIPTION	BACKFILL INFORMATION	REMARKS AND TESTS
								Asphalt (Pavement)		
							GM	Medium dense, gray, silty GRAVEL (GM) (Fill)		
							CL	Soft, moist, brown, CLAY (CL) (Fill)		
514 / 5										
								BASALT, hard, gray (Little Butte Volcanic Series - Tholeiitic Basalt)		
509 / 10										
504 / 15										
499 / 20										Borehole completed at 20ft. below ground surface (bgs).
494 / 25										
489 / 30										

McMILLEN JACOBS ASSOCIATES

Boring P-19

Sheet 1 of 1

Project: Sweet Home WWTP Schematic Design
Project Location: Sweet Home, OR
Project Number: 5834.0

Log of Boring P-20

Date(s) Drilled: 10/29/2019	Geotechnical Consultant: McMillen Jacobs Associates	Logged By: L. Ferguson	Checked By: J. Quinn
Drilling Method/ Rig Type: Air Track Probe/Furukawa HCR900	Drilling Contractor: McCallum Rock Drilling	Total Depth of Borehole: 20.0 ft	
Hole Diameter: 3.00 in	Hammer Weight/Drop (lb/in.)/Type: N/A	Ground Surface Elevation/Datum: 525.4 ft	
Location: Sweet Home WWTP	Coordinates: 7617111.38 E, 275430.15 N	Elevation Source: Site Survey	

ELEV. (FT) / WATER LEVEL / DEPTH (FT)	SAMPLE TYPE	RECOVERY (%)	SAMPLE #	BLOW COUNTS	PENETRATION RESISTANCE BLOWS/FT (BLOWS/FT 20 40 60 80; MC; LL/PL)	GRAPHIC LOG	USCS	MATERIAL DESCRIPTION	BACKFILL INFORMATION	REMARKS AND TESTS
521 / 5							CL	Soft, moist, brown, CLAY (CL) (Fill)		
516 / 10								BASALT, hard, gray (Little Butte Volcanic Series - Tholeiitic Basalt)		
511 / 15										
506 / 20										Borehole completed at 20ft. below ground surface (bgs).
501 / 25										
496 / 30										

McMILLEN JACOBS ASSOCIATES

Boring P-20

Sheet 1 of 1

Project: Sweet Home WWTP Schematic Design
Project Location: Sweet Home, OR
Project Number: 5834.0

Log of Boring P-21

Date(s) Drilled: 10/29/2019	Geotechnical Consultant: McMillen Jacobs Associates	Logged By: L. Ferguson	Checked By: J. Quinn
Drilling Method/ Rig Type: Air Track Probe/Furukawa HCR900	Drilling Contractor: McCallum Rock Drilling	Total Depth of Borehole: 23.0 ft	
Hole Diameter: 3.00 in	Hammer Weight/Drop (lb/in.)/Type: N/A	Ground Surface Elevation/Datum: 521.8 ft	
Location: Sweet Home WWTP	Coordinates: 7617111.78 E, 275548.31 N	Elevation Source: Site Survey	

ELEV. (FT) / WATER LEVEL / DEPTH (FT)	SAMPLE TYPE	RECOVERY (%)	SAMPLE #	BLOW COUNTS	PENETRATION RESISTANCE BLOWS/FT (BLOWS/FT 20 40 60 80; MC; LL/PL)	GRAPHIC LOG	USCS	MATERIAL DESCRIPTION	BACKFILL INFORMATION	REMARKS AND TESTS
							GM	Loose, gray, silty GRAVEL (GM) (Fill)		
517 / 5										
								BASALT, hard, gray (Little Butte Volcanic Series - Tholeiitic Basalt)		
512 / 10										
507 / 15										
502 / 20										
497 / 25										Borehole completed at 23ft. below ground surface (bgs).
492 / 30										

McMILLEN JACOBS ASSOCIATES

Boring P-21

Sheet 1 of 1

Project: Sweet Home WWTP Schematic Design
Project Location: Sweet Home, OR
Project Number: 5834.0

Log of Boring P-22

Date(s) Drilled: 10/29/2019	Geotechnical Consultant: McMillen Jacobs Associates	Logged By: L. Ferguson	Checked By: J. Quinn
Drilling Method/ Rig Type: Air Track Probe/Furukawa HCR900	Drilling Contractor: McCallum Rock Drilling	Total Depth of Borehole: 20.0 ft	
Hole Diameter: 3.00 in	Hammer Weight/Drop (lb/in.)/Type: N/A	Ground Surface Elevation/Datum: 518.5 ft	
Location: Sweet Home WWTP	Coordinates: 7617179.82 E, 275578.51 N	Elevation Source: Site Survey	

ELEV. (FT) / WATER LEVEL / DEPTH (FT)	SAMPLE TYPE	RECOVERY (%)	SAMPLE #	BLOW COUNTS	PENETRATION RESISTANCE BLOWS/FT (BLOWS/FT 20 40 60 80; MC; LL/PL)	GRAPHIC LOG	USCS	MATERIAL DESCRIPTION	BACKFILL INFORMATION	REMARKS AND TESTS
514 / 5							CL	Soft, moist, brown, slightly sandy CLAY (CL) (Fill)		
509 / 10								BASALT, hard, gray (Little Butte Volcanic Series - Tholeiitic Basalt)		
504 / 15										
499 / 20										Borehole completed at 20ft. below ground surface (bgs).
494 / 25										
489 / 30										

McMILLEN JACOBS ASSOCIATES

Boring P-22

Sheet 1 of 1

Project: Sweet Home WWTP Schematic Design
Project Location: Sweet Home, OR
Project Number: 5834.0

Log of Boring P-23

Date(s) Drilled: 10/29/2019	Geotechnical Consultant: McMillen Jacobs Associates	Logged By: L. Ferguson	Checked By: J. Quinn
Drilling Method/ Rig Type: Air Track Probe/Furukawa HCR900	Drilling Contractor: McCallum Rock Drilling	Total Depth of Borehole: 23.0 ft	
Hole Diameter: 3.00 in	Hammer Weight/Drop (lb/in.)/Type: N/A	Ground Surface Elevation/Datum: 530.4 ft	
Location: Sweet Home WWTP	Coordinates: 7617036.68 E, 275432.95 N	Elevation Source: Site Survey	

ELEV. (FT) / WATER LEVEL / DEPTH (FT)	SAMPLE TYPE	RECOVERY (%)	SAMPLE #	BLOW COUNTS	PENETRATION RESISTANCE BLOWS/FT (BLOWS/FT 20 40 60 80; MC; LL/PL)	GRAPHIC LOG	USCS	MATERIAL DESCRIPTION	BACKFILL INFORMATION	REMARKS AND TESTS
								Asphalt (Pavement)		
							GM	Medium dense, gray, slightly silty GRAVEL (GM) (Fill)		
							CL	Soft, moist, brown, CLAY (CL) (Fill)		
526 / 5										
521 / 10										
516 / 15								BASALT, hard, gray (Little Butte Volcanic Series - Tholeiitic Basalt)		
511 / 20										There was no return of rock chips until 22 feet bgs. Driller commented that the hole was being plugged by dirt and preventing return of rock fragments.
506 / 25										Borehole completed at 23ft. below ground surface (bgs).
501 / 30										

McMILLEN JACOBS ASSOCIATES

Boring P-23

Sheet 1 of 1

Project: Sweet Home WWTP Schematic Design
Project Location: Sweet Home, OR
Project Number: 5834.0

Log of Boring P-24

Date(s) Drilled: 10/30/2019	Geotechnical Consultant: McMillen Jacobs Associates	Logged By: L. Ferguson	Checked By: J. Quinn
Drilling Method/ Rig Type: Air Track Probe/Furukawa HCR900	Drilling Contractor: McCallum Rock Drilling	Total Depth of Borehole: 15.0 ft	
Hole Diameter: 3.00 in	Hammer Weight/Drop (lb/in.)/Type: N/A	Ground Surface Elevation/Datum: 529.7 ft	
Location: Sweet Home WWTP	Coordinates: 7617008.03 E, 275578.53 N	Elevation Source: Site Survey	

ELEV. (FT) / WATER LEVEL / DEPTH (FT)	SAMPLE TYPE	RECOVERY (%)	SAMPLE #	BLOW COUNTS	PENETRATION RESISTANCE BLOWS/FT (BLOWS/FT 20 40 60 80; MC; LL/PL)	GRAPHIC LOG	USCS	MATERIAL DESCRIPTION	BACKFILL INFORMATION	REMARKS AND TESTS
							GM	Loose, gray, silty GRAVEL (GM) (Fill)		
525 / 5								BASALT, hard, gray (Little Butte Volcanic Series - Tholeiitic Basalt)		Driller commented that it got wet around 5 feet bgs.
520 / 10										
515 / 15										Borehole completed at 15ft. below ground surface (bgs).
510 / 20										
505 / 25										
500 / 30										

McMILLEN JACOBS ASSOCIATES

Boring P-24

Sheet 1 of 1

Project: Sweet Home WWTP Schematic Design
Project Location: Sweet Home, OR
Project Number: 5834.0

Log of Boring P-25

Date(s) Drilled: 10/29/2019	Geotechnical Consultant: McMillen Jacobs Associates	Logged By: L. Ferguson	Checked By: J. Quinn
Drilling Method/ Rig Type: Air Track Probe/Furukawa HCR900	Drilling Contractor: McCallum Rock Drilling	Total Depth of Borehole: 15.0 ft	
Hole Diameter: 3.00 in	Hammer Weight/Drop (lb/in.)/Type: N/A	Ground Surface Elevation/Datum: 506.4 ft	
Location: Pleasant Valley Boat Ramp	Coordinates: 7617287.27 E, 275672.91 N	Elevation Source: Site Survey	

ELEV. (FT) / WATER LEVEL / DEPTH (FT)	SAMPLE TYPE	RECOVERY (%)	SAMPLE #	BLOW COUNTS	PENETRATION RESISTANCE BLOWS/FT (BLOWS/FT 20 40 60 80; MC LL/PL)	GRAPHIC LOG	USCS	MATERIAL DESCRIPTION	BACKFILL INFORMATION	REMARKS AND TESTS
								Asphalt (Pavement)		
							GM	Medium dense, gray, silty GRAVEL (GM) (Fill)		
								BASALT, hard, gray (Little Butte Volcanic Series - Tholeiitic Basalt)		
502 / 5										
497 / 10										
492 / 15										Borehole completed at 15ft. below ground surface (bgs).
487 / 20										
482 / 25										
477 / 30										

McMILLEN JACOBS ASSOCIATES

Boring P-25

Sheet 1 of 1

Project: Sweet Home WWTP Schematic Design
Project Location: Sweet Home, OR
Project Number: 5834.0

Log of Boring P-26

Date(s) Drilled: 10/29/2019	Geotechnical Consultant: McMillen Jacobs Associates	Logged By: L. Ferguson	Checked By: J. Quinn
Drilling Method/ Rig Type: Air Track Probe/Furukawa HCR900	Drilling Contractor: McCallum Rock Drilling	Total Depth of Borehole: 23.0 ft	
Hole Diameter: 3.00 in	Hammer Weight/Drop (lb/in.)/Type: N/A	Ground Surface Elevation/Datum: 507.2 ft	
Location: Pleasant Valley Boat Ramp	Coordinates: 7617279.85 E, 275716.52 N	Elevation Source: Site Survey	

ELEV. (FT) / WATER LEVEL / DEPTH (FT)	SAMPLE TYPE	RECOVERY (%)	SAMPLE #	BLOW COUNTS	PENETRATION RESISTANCE BLOWS/FT (BLOWS/FT 20 40 60 80; MC; LL/PL)	GRAPHIC LOG	USCS	MATERIAL DESCRIPTION	BACKFILL INFORMATION	REMARKS AND TESTS
							GM	Medium dense, gray, silty GRAVEL (GM) (Fill)		
503 / 5								BASALT, fractured, gray (Little Butte Volcanic Series - Tholeiitic Basalt)		Driller comments that between 5 and 12 feet bgs seemed like highly fractured rock.
498 / 10										
493 / 15								BASALT, hard, gray (Little Butte Volcanic Series - Tholeiitic Basalt)		
488 / 20										
483 / 25										Borehole completed at 23ft. below ground surface (bgs).
478 / 30										

McMILLEN JACOBS ASSOCIATES

Boring P-26

Sheet 1 of 1

Project: Sweet Home WWTP Schematic Design
Project Location: Sweet Home, OR
Project Number: 5834.0

Log of Boring P-27

Date(s) Drilled: 10/29/2019	Geotechnical Consultant: McMillen Jacobs Associates	Logged By: L. Ferguson	Checked By: J. Quinn
Drilling Method/ Rig Type: Air Track Probe/Furukawa HCR900	Drilling Contractor: McCallum Rock Drilling	Total Depth of Borehole: 26.0 ft	
Hole Diameter: 3.00 in	Hammer Weight/Drop (lb/in.)/Type: N/A	Ground Surface Elevation/Datum: 516.6 ft	
Location: Sweet Home WWTP	Coordinates: 7617372.72 E, 275312.04 N	Elevation Source: Site Survey	

ELEV. (FT)	DEPTH (FT)	SAMPLE TYPE	RECOVERY (%)	SAMPLE #	BLOW COUNTS	USCS	MATERIAL DESCRIPTION	REMARKS AND TESTS
							Concrete (Pavement)	
						CL	Soft, moist, brown, slightly sandy CLAY (CL) (Fill)	
512	5							
507	10						BASALT, hard, gray (Little Butte Volcanic Series - Tholeiitic Basalt)	
502	15							
497	20							
492	25							Borehole completed at 26ft. below ground surface (bgs).
487	30							

PENETRATION RESISTANCE BLOWS/FT: BLOWS/FT 20 40 60 80; MC; LL/PL

GRAPHIC LOG

BACKFILL INFORMATION

McMILLEN JACOBS ASSOCIATES

Boring P-27

Sheet 1 of 1

Project: Sweet Home WWTP Final Design Review
Project Location:
Project Number: 6367.0

Log of Boring P-28

Date(s) Drilled: 06/20/2022 - 06/20/2022	Geotechnical Consultant: McMillen Jacobs Associates	Logged By: A. Judy	Checked By: J. Quinn
Drilling Method/ Rig Type: 8.25" Hollow Stem Auger/CME 75	Drilling Contractor: PLI Systems, Inc.	Total Depth of Borehole: 11.2 ft	
Hole Diameter: 8.25 in	Hammer Weight/Drop (lb/in.)/Type: 140 lb / 30 in / Automatic	Ground Surface Elevation/Datum: 516.5 ft	
Location: See Figure 2 Site Plan	Coordinates: 7617342.00 E, 275383.00 N	Elevation Source: Site Survey	

ELEV. (FT) / WATER LEVEL / DEPTH (FT)	SAMPLE TYPE	RECOVERY (%)	SAMPLE #	BLOW COUNTS	PENETRATION RESISTANCE BLOWS/FT (BLOWS/FT 20 40 60 80; MC LL/PL)	GRAPHIC LOG	USCS	MATERIAL DESCRIPTION	BACKFILL INFORMATION	REMARKS AND TESTS
								Soft, moist, brown, SILT (ML); low plasticity, trace fine gravel, trace fine sand, trace wood fibers. (Fill)		
512 / 5		67	SPT-1	1-1-1 (N=2)			ML	*Becomes gray mottled at 5.5 feet.*		
		100	G-1							
507 / 10		64	SPT-2	1-7-50/3" (Refusal)				*10 - 11 feet: sample consists of approx. 50% wood fibers by volume.* *Auger refusal at 11.25 feet on basalt bedrock.*		Borehole completed at 11.25ft. below ground surface (bgs).
502 / 15										
497 / 20										
492 / 25										
487 / 30										

McMILLEN JACOBS ASSOCIATES

Boring P-28

Sheet 1 of 1

Project: Sweet Home WWTP Final Design Review
Project Location:
Project Number: 6367.0

Log of Boring P-29

Date(s) Drilled	06/20/2022 - 06/20/2022	Geotechnical Consultant	McMillen Jacobs Associates	Logged By	A. Judy	Checked By	J. Quinn
Drilling Method/ Rig Type	8.25" Hollow Stem Auger/CME 75	Drilling Contractor	PLI Systems, Inc.	Total Depth of Borehole	19.0 ft		
Hole Diameter	8.25 in	Hammer Weight/Drop (lb/in.)/Type	140 lb / 30 in / Automatic	Ground Surface Elevation/Datum	517.3 ft		
Location	See Figure 2 Site Plan	Coordinates	7617301.00 E, 275320.00 N	Elevation Source	Site Survey		

ELEV. (FT) / WATER LEVEL / DEPTH (FT)	SAMPLE TYPE	RECOVERY (%)	SAMPLE #	BLOW COUNTS	PENETRATION RESISTANCE BLOWS/FT (BLOWS/FT 20 40 60 80; MC LL/PL)	GRAPHIC LOG	USCS	MATERIAL DESCRIPTION	BACKFILL INFORMATION	REMARKS AND TESTS
								Asphalt - 5" thick (Pavement)		
								Base Aggregate - 3" thick (Fill)		
								Soft, moist, brown, SILT (ML); low plasticity, trace fine gravel, trace fine sand, trace wood fibers. (Fill)		
513		100	G-1							
5		20	SPT-1	1-0-2 (N=2)			ML			
		100	G-2							
508										
10		33	SPT-2	0-7-26 (N=33)				*Becomes wet at 10 feet.*		Auger grinding below 10 - 15 feet.
		100	G-3					BASALT; very weak, dark brown, highly weathered to decomposed (Little Butte Volcanic Series - Tholeiitic Basalt)		
		70	SPT-3	50/12" (Refusal)						
503										
15		98	SPT-4	26-50/5" (Refusal)				*Penetration rate decreases significantly at 15 feet; stronger rock inferred below this depth.*		Smooth, slow drilling below 15 feet.
		87	SPT-5	12-23-33 (N=56)				*Becomes dark blue-gray at 18 feet.*		
498										Borehole completed at 19ft. below ground surface (bgs).
20										
493										
25										
488										
30										

McMILLEN JACOBS ASSOCIATES

Boring P-29

Sheet 1 of 1

Project: Sweet Home WWTP Final Design Review
Project Location:
Project Number: 6367.0

Log of Boring P-30

Date(s) Drilled	06/20/2022 - 06/20/2022	Geotechnical Consultant	McMillen Jacobs Associates	Logged By	A. Judy	Checked By	J. Quinn
Drilling Method/ Rig Type	8.25" Hollow Stem Auger/CME 75	Drilling Contractor	PLI Systems, Inc.	Total Depth of Borehole	11.2 ft		
Hole Diameter	8.25 in	Hammer Weight/Drop (lb/in.)/Type	140 lb / 30 in / Automatic	Ground Surface Elevation/Datum	519.8 ft		
Location	See Figure 2 Site Plan	Coordinates	7617195.00 E, 275427.00 N	Elevation Source	Site Survey		

ELEV. (FT)	DEPTH (FT)	SAMPLE TYPE	RECOVERY (%)	SAMPLE #	BLOW COUNTS	USCS	MATERIAL DESCRIPTION	BACKFILL INFORMATION	REMARKS AND TESTS
			100	G-1		ML	Moist, light brown, SILT with gravel (ML); low plasticity, fine to coarse angular gravel. (Fill)		
515	5		100	SPT-1	1-0-1 (N=1)	SM	Very soft, wet, light brown, Silty SAND (SM); fine to medium sand, low plasticity fines. (Fill)		
510	10		40	SPT-2	8-11-50/3" (Refusal)		*Basalt inferred below 11 feet.* *Auger refusal at 11.25 feet on basalt bedrock.*		Borehole completed at 11.25ft. below ground surface (bgs).
505	15								
500	20								
495	25								
490	30								

PENETRATION RESISTANCE BLOWS/FT: BLOWS/FT (20 40 60 80); MC; LL/PL

McMILLEN JACOBS ASSOCIATES

Boring P-30

Sheet 1 of 1

Project: Sweet Home WWTP Final Design Review
Project Location:
Project Number: 6367.0

Log of Boring P-31

Date(s) Drilled	06/20/2022 - 06/20/2022	Geotechnical Consultant	McMillen Jacobs Associates	Logged By	A. Judy	Checked By	J. Quinn
Drilling Method/ Rig Type	8.25" Hollow Stem Auger/CME 75	Drilling Contractor	PLI Systems, Inc.	Total Depth of Borehole	12.7 ft		
Hole Diameter	8.25 in	Hammer Weight/Drop (lb/in.)/Type	140 lb / 30 in / Automatic	Ground Surface Elevation/Datum	520.8 ft		
Location	See Figure 2 Site Plan	Coordinates	7617173.00 E, 275391.00 N	Elevation Source	Site Survey		

ELEV. (FT) / WATER LEVEL / DEPTH (FT)	SAMPLE TYPE	RECOVERY (%)	SAMPLE #	BLOW COUNTS	PENETRATION RESISTANCE BLOWS/FT (BLOWS/FT 20 40 60 80; MC LL/PL)	GRAPHIC LOG	USCS	MATERIAL DESCRIPTION	BACKFILL INFORMATION	REMARKS AND TESTS
								Asphalt - 5" thick (Pavement)		
								Base Aggregate - 1" thick (Fill)		
							ML	Moist, light brown, SILT with gravel (ML); low plasticity, fine to coarse angular gravel. (Fill)		
516 / 5		33	SPT-1	0-0-1 (N=1)			ML	Very soft, moist to wet, Sandy SILT (ML); fine to medium sand, low plasticity fines. (Fill)		
511 / 10		40	SPT-2	30-38-16 (N=54)				*Basalt inferred below 10 feet.*		Rod chatter begins at 9 feet and increases significantly below 10 feet.
		147	SPT-3	50/2" (Refusal)				*Auger refusal at 12.67 feet on basalt bedrock.*		Borehole completed at 12.67ft. below ground surface (bgs).
506 / 15										
501 / 20										
496 / 25										
491 / 30										

McMILLEN JACOBS ASSOCIATES

Boring P-31

Sheet 1 of 1

Project: Sweet Home WWTP Final Design Review
Project Location:
Project Number: 6367.0

Log of Boring P-32

Date(s) Drilled	06/20/2022 - 06/20/2022	Geotechnical Consultant	McMillen Jacobs Associates	Logged By	A. Judy	Checked By	J. Quinn
Drilling Method/ Rig Type	8.25" Hollow Stem Auger/CME 75	Drilling Contractor	PLI Systems, Inc.	Total Depth of Borehole	10.2 ft		
Hole Diameter	8.25 in	Hammer Weight/Drop (lb/in.)/Type	140 lb / 30 in / Automatic	Ground Surface Elevation/Datum	530.4 ft		
Location	See Figure 2 Site Plan	Coordinates	7617027.00 E, 275515.00 N	Elevation Source	Site Survey		

ELEV. (FT) / WATER LEVEL / DEPTH (FT)	SAMPLE TYPE	RECOVERY (%)	SAMPLE #	BLOW COUNTS	PENETRATION RESISTANCE BLOWS/FT (BLOWS/FT 20 40 60 80; MC LL/PL)	GRAPHIC LOG	USCS	MATERIAL DESCRIPTION	BACKFILL INFORMATION	REMARKS AND TESTS
								Asphalt - 6" thick (Pavement)		
								Base Aggregate - 2" thick (Fill)		
		100	G-1				ML	Moist, dark brown, SILT with gravel (ML); low plasticity, fine to coarse gravel. (Fill)		
526 / 5		100	SPT-1	0-1-1 (N=2)			ML	Soft, moist, gray, SILT (ML); low plasticity, trace fine sand. (Fill) *Becomes gray at 4.5 feet.*		
521 / 10		47	SPT-2	50/2" (Refusal)				*Auger refusal at 10.17 feet on basalt bedrock.*		Rod chatter below 9.5 feet bgs.
516 / 15										Borehole completed at 10.17ft. below ground surface (bgs).
511 / 20										
506 / 25										
501 / 30										

McMILLEN JACOBS ASSOCIATES

Boring P-32

Sheet 1 of 1

Project: Sweet Home WWTP Final Design Review
Project Location:
Project Number: 6367.0

Log of Boring P-33

Date(s) Drilled	06/20/2022 - 06/20/2022	Geotechnical Consultant	McMillen Jacobs Associates	Logged By	A. Judy	Checked By	J. Quinn
Drilling Method/ Rig Type	8.25" Hollow Stem Auger/CME 75	Drilling Contractor	PLI Systems, Inc.	Total Depth of Borehole	3.7 ft		
Hole Diameter	8.25 in	Hammer Weight/Drop (lb/in.)/Type	140 lb / 30 in / Automatic	Ground Surface Elevation/Datum	529.6 ft		
Location	See Figure 2 Site Plan	Coordinates	7616945.00 E, 275701.00 N	Elevation Source	Site Survey		

ELEV. (FT) / WATER LEVEL / DEPTH (FT)	SAMPLE TYPE	RECOVERY (%)	SAMPLE #	BLOW COUNTS	PENETRATION RESISTANCE BLOWS/FT (BLOWS/FT 20 40 60 80; MC LL/PL)	GRAPHIC LOG	USCS	MATERIAL DESCRIPTION	BACKFILL INFORMATION	REMARKS AND TESTS
		100	G-1				GM	Moist, brown, Silty GRAVEL (GM); fine to coarse gravel, non-plastic fines. (Fill)		Strong rod chatter from ground surface to 3.5 feet bgs.
		0	SPT-1	50/2" (Refusal)				*Basalt inferred below 3.5 feet.* *Auger refusal at 3.67 feet on basalt bedrock.*		Auger bit grinding at 3.5 feet.
525 / 5										Borehole completed at 3.67ft. below ground surface (bgs).
520 / 10										
515 / 15										
510 / 20										
505 / 25										
500 / 30										

McMILLEN JACOBS ASSOCIATES

Boring P-33

Sheet 1 of 1

Project: Sweet Home WWTP Final Design Review
Project Location:
Project Number: 6367.0

Log of Boring P-34

Date(s) Drilled	06/20/2022 - 06/20/2022	Geotechnical Consultant	McMillen Jacobs Associates	Logged By	A. Judy	Checked By	J. Quinn
Drilling Method/ Rig Type	8.25" Hollow Stem Auger/CME 75	Drilling Contractor	PLI Systems, Inc.	Total Depth of Borehole	15.0 ft		
Hole Diameter	8.25 in	Hammer Weight/Drop (lb/in.)/Type	140 lb / 30 in / Automatic	Ground Surface Elevation/Datum	516.9 ft		
Location	See Figure 2 Site Plan	Coordinates	7617301.00 E, 275494.00 N	Elevation Source	Site Survey		

ELEV. (FT)	WATER LEVEL	DEPTH (FT)	SAMPLE TYPE	RECOVERY (%)	SAMPLE #	BLOW COUNTS	PENETRATION RESISTANCE BLOWS/FT (BLOWS/FT 20 40 60 80; MC LL/PL)	GRAPHIC LOG	USCS	MATERIAL DESCRIPTION	BACKFILL INFORMATION	REMARKS AND TESTS
										Asphalt - 5" thick (Pavement)		
										Base Aggregate - 2" thick (Fill)		
									GM	Moist, brown, Silty GRAVEL (GM); fine to coarse gravel, low plasticity fines. (Fill)		
				100	G-1					Soft to very soft, moist, brown, SILT (ML); low plasticity, trace fine sand. (Fill)		
512		5		40	SPT-1	1-1-3 (N=4)			ML			
507		10		33	SPT-2	1-0-1 (N=1)				*Becomes very soft, grades to Silt with sand at 10 feet.*		
502		15		100	SPT-3	50/2" (Refusal)				*Auger refusal at 15 feet on basalt bedrock.*		Borehole completed at 15ft. below ground surface (bgs).
497		20										
492		25										
487		30										

McMILLEN JACOBS ASSOCIATES

Boring P-34

Sheet 1 of 1

Project: Sweet Home WWTP Final Design Review
Project Location:
Project Number: 6367.0

Log of Boring P-35

Date(s) Drilled	06/20/2022 - 06/20/2022	Geotechnical Consultant	McMillen Jacobs Associates	Logged By	A. Judy	Checked By	J. Quinn
Drilling Method/ Rig Type	8.25" Hollow Stem Auger/CME 75	Drilling Contractor	PLI Systems, Inc.	Total Depth of Borehole	7.1 ft		
Hole Diameter	8.25 in	Hammer Weight/Drop (lb/in.)/Type	140 lb / 30 in / Automatic	Ground Surface Elevation/Datum	517.5 ft		
Location	See Figure 2 Site Plan	Coordinates	7617255.00 E, 275628.00 N	Elevation Source	Site Survey		

ELEV. (FT) / WATER LEVEL / DEPTH (FT)	SAMPLE TYPE	RECOVERY (%)	SAMPLE #	BLOW COUNTS	PENETRATION RESISTANCE BLOWS/FT (BLOWS/FT 20 40 60 80; MC LL/PL)	GRAPHIC LOG	USCS	MATERIAL DESCRIPTION	BACKFILL INFORMATION	REMARKS AND TESTS
							GM	Moist, dark gray and brown, Silty GRAVEL (GM); fine to coarse gravel. (Fill)		Rod chatter from ground surface to 5 feet bgs.
							ML	Soft, moist, brown, SILT (ML); low plasticity, trace fine sand. (Fill)		
513 / 5		60	SPT-1	0-1-2 (N=3)						Rod chatter and difficulty anvancing auger below 6 feet.
		0	SPT-2	50/1" (Refusal)				*Basalt inferred below 6 feet.* *Auger refusal at 7.08 feet on basalt bedrock.*		Borehole completed at 7.08ft. below ground surface (bgs).
508 / 10										
503 / 15										
498 / 20										
493 / 25										
488 / 30										

McMILLEN JACOBS ASSOCIATES

Boring P-35

Sheet 1 of 1

Appendix B

Rock Core Photos

BOREHOLE B-01, 3.5 TO 13.5 FEET

BOREHOLE B-05, 9.0 TO 16.3 FEET

McMILLEN JACOBS ASSOCIATES	SWEET HOME WWTP SCHEMATIC DESIGN GEOTECHNICAL DATA REPORT	JULY 2022
	CORE PHOTOGRAPHS	FIGURE B - 1

BOREHOLE B-05, 16.3 TO 23 FEET

McMILLEN JACOBS ASSOCIATES	SWEET HOME WWTP SCHEMATIC DESIGN GEOTECHNICAL DATA REPORT	JULY 2022
	CORE PHOTOGRAPHS	FIGURE B - 2

Appendix C

Laboratory Test Results

Northwest Testing, Inc.
A Division of Northwest Geotech, Inc.
9120 SW Pioneer Court, Suite B, Wilsonville, Oregon 97070 | ph: 503.682.1880 fax: 503.682.2753 | www.nwgeotech.com

TECHNICAL REPORT

Report To:	Mr. Farid Sariosseiri McMillen Jacobs Associates 1500 SW First Avenue, Suite 750 Portland, Oregon 97201	**Date:** **Lab No:**	5/14/18 18-108
Project:	Laboratory Testing – Sweet Home WWTP 5834.0	**Project No.:**	2286.1.1

Report of: Atterberg limits, moisture content, and compressive strength of rock

Sample Identification

NTI completed Atterberg limits, moisture content, and compressive strength of rock testing on samples delivered to our laboratory on May 9, 2018 by a McMillen Jacobs Associates representative. Testing was performed in accordance with the standards indicated. Our laboratory test results are summarized on the following tables and attached pages.

Laboratory Test Results

Atterberg Limits (ASTM D 4318)			
Sample ID	**Liquid Limit**	**Plastic Limit**	**Plasticity Index**
B-3 S-2 @ 5 – 6.5 ft.	51	28	23
B-5 S-1 @ 2.5 – 4 ft.	44	28	16

Moisture Content of Soil (ASTM D 2216)	
Sample ID	**Moisture Content (Percent)**
B-3 S-2 @ 5 – 6.5 ft.	44.8
B-5 S-1 @ 2.5 – 4 ft.	26.3

Copies: Addressee

This report shall not be reproduced except in full, without written approval of Northwest Testing, Inc.

Northwest Testing, Inc.
A Division of Northwest Geotech, Inc.
9120 SW Pioneer Court, Suite B, Wilsonville, Oregon 97070 | ph: 503.682.1880 fax: 503.682.2753 | www.nwgeotech.com

TECHNICAL REPORT

Report To:	Mr. Farid Sariosseiri McMillen Jacobs Associates 1500 SW First Avenue, Suite 750 Portland, Oregon 97201	**Date:**	5/14/18
		Lab No:	18-108
Project:	Laboratory Testing – Sweet Home WWTP 5834.0	**Project No.:**	2286.1.1

Laboratory Testing

Compressive Strength of Intact Rock Core Specimens (ASTM D 7012 Method C)				
Sample ID	**Diameter (inches)**	**Height (inches)**	**Rate of Loading (lbs/s)**	**Uniaxial Compressive Strength (psi)**
B-1 R-1 @ 5.2 – 6.3 ft.	2.41	4.88	100	25,302

Photo1: As received sample

Photo 2: Test sample before testing

Photo 3: Test sample after testing

This report shall not be reproduced except in full, without written approval of Northwest Testing, Inc.

Northwest Testing, Inc.
A Division of Northwest Geotech, Inc.
9120 SW Pioneer Court, Suite B, Wilsonville, Oregon 97070 | ph: 503.682.1880 fax: 503.682.2753 | www.nwgeotech.com

TECHNICAL REPORT

Report To:	Mr. Farid Sariosseiri McMillen Jacobs Associates 1500 SW First Avenue, Suite 750 Portland, Oregon 97201	**Date:**	5/14/18
		Lab No:	18-108
Project:	Laboratory Testing – Sweet Home WWTP 5834.0	**Project No.:**	2286.1.1

Laboratory Testing

Compressive Strength of Intact Rock Core Specimens (ASTM D 7012 Method C)				
Sample ID	**Diameter (inches)**	**Height (inches)**	**Rate of Loading (lbs/s)**	**Uniaxial Compressive Strength (psi)**
B-5 R-1 @ 11.7 – 12.4 ft.	2.41	4.85	100	25,919

Photo1: As received sample

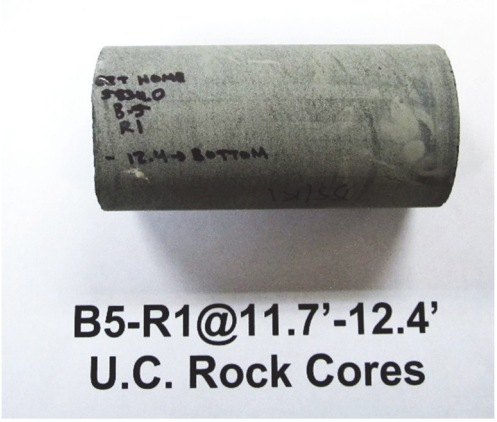

Photo 2: Test sample before testing

Photo 3: Test sample after testing

Laboratory Testing

This report shall not be reproduced except in full, without written approval of Northwest Testing, Inc.

Northwest Testing, Inc.
A Division of Northwest Geotech, Inc.
9120 SW Pioneer Court, Suite B, Wilsonville, Oregon 97070 | ph: 503.682.1880 fax: 503.682.2753 | www.nwgeotech.com

TECHNICAL REPORT

Report To:	Mr. Farid Sariosseiri McMillen Jacobs Associates 1500 SW First Avenue, Suite 750 Portland, Oregon 97201	**Date:**	5/14/18
		Lab No:	18-108
Project:	Laboratory Testing – Sweet Home WWTP 5834.0	**Project No.:**	2286.1.1

Compressive Strength of Intact Rock Core Specimens (ASTM D 7012 Method C)				
Sample ID	**Diameter (inches)**	**Height (inches)**	**Rate of Loading (lbs/s)**	**Uniaxial Compressive Strength (psi)**
B-5 R-2 @ 18 – 19 ft.	2.41	4.86	100	6932

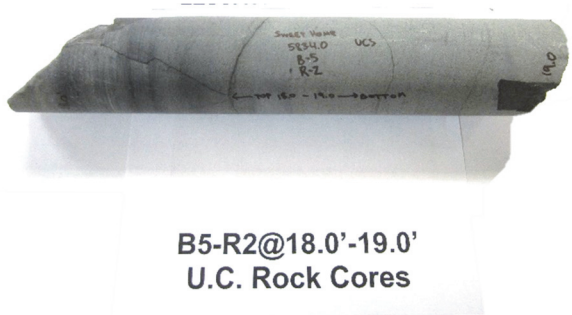

Photo1: As received sample

Photo 2: Test sample before testing

Photo 3: Test sample after testing

This report shall not be reproduced except in full, without written approval of Northwest Testing, Inc.

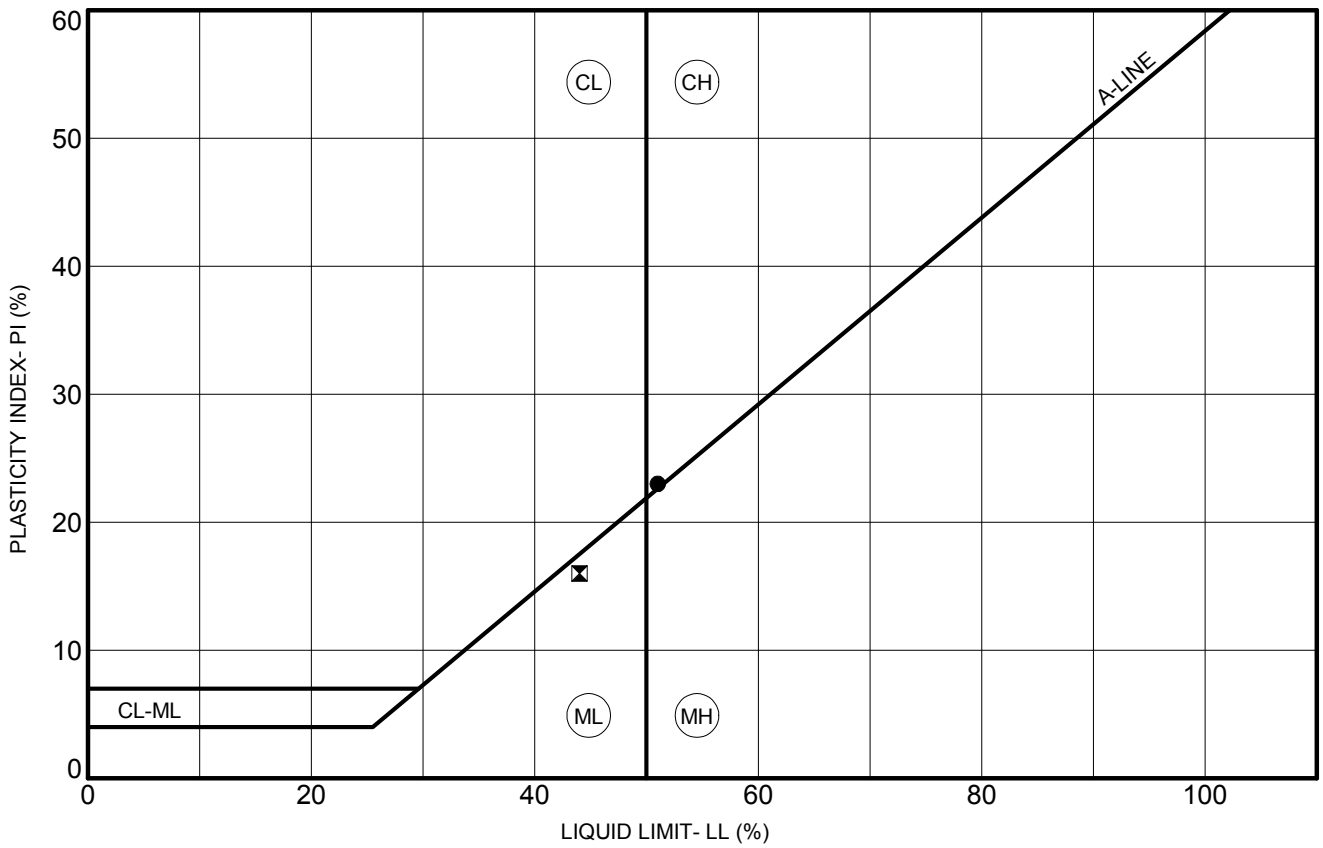

	Sample ID	Depth (ft)	Moisture Content %	LL	PL	PI	% Pass #200	Classification
●	**B-03**	**5.0**	**(44.8)**	**51**	**28**	**23**		**CH**
⧗	**B-05**	**2.5**	**(26.3)**	**44**	**28**	**16**		**ML**

McMILLEN JACOBS ASSOCIATES
1500 SW 1ST AVE STE 750
PORTLAND, OR 97201
TELEPHONE: 503.384.2906

ATTERBERG LIMITS

Project: Waste Water Treatment Plant - Schematic Design
Number: 5834.0
Sample Location: Sweet Home
Testing Agency: Northwest Testing, Inc.

JA_ATTERBERG_PORTLAND OFFICE ADDRESS 5834.0 SWEET HOME.GPJ JACOBS DATA TEMPLATE_GENERAL SOIL PROJECTS.GDT 6/11/18 REV-

Point Load Strength Index Test Results ASTM D-5731

PROJECT:	Sweet Home WWTP	**LAB SAMPLE NO.:**	
PROJECT NO.:	5834.0	**SAMPLE NO.:**	5834.0 - B-5
PROJECT LOCATION:	Sweet Home, OR	**SAMPLE DESCRIP:**	Basalt
SAMPLED BY:	Julia Irizarry	**DATE REPORTED:**	5/11/2018
DATE SAMPLED:	5/2/2018	**REPORTED BY:**	Devin Roth

Sample No.	Test Number	Test Type*	Rock Type	Width, W	Depth or Diameter, D	Failure Load, P	De^2	Point Load Strength Index, $I_{s(50)}$	Uniaxial Compressive Strength, UCS
				(in)	(in)	(lbs)	(in^2)	(psi)	(psi)
1	1	d	Basalt	5.31	2.36	5959	10313	513	12563
2	2	d	Basalt	5.91	2.36	3828	11459	304	7437
2B	3	d	Basalt	3.23	2.36	5158	6264	653	13717
3	4	d	Basalt	10.04	2.36	5104	19481	268	5098
3B	5	d	Basalt	5.59	2.36	6882	10848	569	13951
5	6	d	Basalt	6.69	2.36	8044	12987	579	13315
6	7	d	Basalt	5.12	2.36	4598	9931	407	9778
7	8	d	Basalt	4.13	2.36	6830	8021	714	17138
8	9	d	Basalt	11.42	2.36	8044	22154	383	9185
9	10	d	Basalt	5.20	2.36	7882	10084	690	14493
							Min	**268**	**5098**
							Max	**714**	**17138**
							Avg	**508**	**11667**

Size Corrected Point Load Index, $Is_{(50)}$

$I_{s(50)}$ = **508 psi** or **73,159 psf** or **3.5 MPa**

Mean Uniaxial Compressive Strength, σ_c

σ_c = **11,667 psi** or **1,680,111 psf** or **80 MPa**

*Test Type

d = diametral
a = axial
b = block
l= lump

Updated Project Schedule
Sweet Home Mahler WRF Improvements Project

ID	Task Name	Duration	Start	Finish
1	**Mahler WRF Improvements - Schedule Start Date (Phase 1 Design In Progress)**	**0 days**	**Wed 6/1/22**	**Wed 6/1/22**
2	**Update USDA PER and ER Documents**	**175 days**	**Wed 6/1/22**	**Tue 1/31/23**
3	Update USDA PER/ER Documents	80 days	Wed 6/1/22	Tue 9/20/22
4	**Draft PER/ER Revisions Submittal to City for Review**	**0 days**	**Tue 9/20/22**	**Tue 9/20/22**
5	City Review Period	10 days	Wed 9/21/22	Tue 10/4/22
6	Incorporate City comments and finalize Updated PER	5 days	Wed 10/5/22	Tue 10/11/22
7	**Submit updated PER to USDA and DEQ**	**0 days**	**Tue 10/11/22**	**Tue 10/11/22**
8	Agency PER/ER Review and Cross-Cutters	80 days	Wed 10/12/22	Tue 1/31/23
9	**Mahler WRF Phase 1 Design, Bidding and Construction**	**367 days**	**Wed 6/1/22**	**Thu 10/26/23**
10	**Phase 1 Design**	**50 days**	**Wed 6/1/22**	**Tue 8/9/22**
11	Phase 1 90% Design Completion	18 days	Wed 6/1/22	Fri 6/24/22
12	**Submit 90% Design to City and DEQ for review**	**0 days**	**Fri 6/24/22**	**Fri 6/24/22**
13	City and DEQ Review Period	10 days	Mon 6/27/22	Fri 7/8/22
14	Prepare Phase 1 Final Contract Documents for Bidding	17 days	Mon 7/11/22	Tue 8/2/22
15	**Phase 1 Final Contract Documents Complete**	**0 days**	**Tue 8/2/22**	**Tue 8/2/22**
16	**City Council Authorization to Proceed to Phase 1 Bidding**	**0 days**	**Tue 8/9/22**	**Tue 8/9/22**
17	**General Contractor Pre-Qualification**	**45 days**	**Wed 6/15/22**	**Tue 8/16/22**
18	**Begin Contractor PreQualification Process**	**0 days**	**Wed 6/15/22**	**Wed 6/15/22**
19	**Mandatory Pre-Submittal Meeting (10A @ Mahler WRF)**	**0 days**	**Thu 7/7/22**	**Thu 7/7/22**
20	**Contractor PQ Submittals Due @ 2P**	**0 days**	**Thu 7/28/22**	**Thu 7/28/22**
21	Contractor PQ Submittal Reviews	14 days	Thu 7/28/22	Tue 8/16/22
22	**PreQualified Contractors List Issued**	**0 days**	**Tue 8/16/22**	**Tue 8/16/22**
23	**Phase 1 Bidding and Contracts**	**54 days**	**Wed 8/10/22**	**Tue 10/25/22**
24	First Bid Advertisement Date	0 days	Wed 8/10/22	Wed 8/10/22
25	Bidding	25 days	Thu 8/11/22	Wed 9/14/22
26	**Bid Opening**	**0 days**	**Wed 9/14/22**	**Wed 9/14/22**
27	Bid Evaluation and Recommendation of Award	15 days	Thu 9/15/22	Wed 10/5/22
28	**City Council Award**	**0 days**	**Tue 10/11/22**	**Tue 10/11/22**
29	Finalize Contracts	10 days	Wed 10/12/22	Tue 10/25/22
30	**Phase 1 Construction**	**262 days**	**Wed 10/26/22**	**Thu 10/26/23**
31	Notice to Proceed & Contractor Mobilization	10 days	Wed 10/26/22	Tue 11/8/22
32	Construction to Substantial Completion & Punch List	212 days	Wed 11/9/22	Thu 8/31/23
33	Final Completion, Startup & Commissioning	40 days	Fri 9/1/23	Thu 10/26/23
34	**Mahler WRF Phase 2 WWTP Design, Bidding & Construction**	**871 days**	**Wed 6/1/22**	**Wed 10/1/25**
35	**Phase 2 Design**	**265 days**	**Wed 6/1/22**	**Tue 6/6/23**
36	Preliminary Design & Workshops	80 days	Wed 6/1/22	Tue 9/20/22
37	**Preliminary Design Submittal**	**0 days**	**Tue 9/20/22**	**Tue 9/20/22**
38	City Review Period	10 days	Wed 9/21/22	Tue 10/4/22
39	60% Final Design & Workshops	60 days	Wed 10/5/22	Tue 12/27/22
40	**60% Final Design Submittal**	**0 days**	**Tue 12/27/22**	**Tue 12/27/22**
41	City Review Period	10 days	Wed 12/28/22	Tue 1/10/23
42	90% Final Design	60 days	Wed 1/11/23	Tue 4/4/23
43	**90% Final Design Submittal**	**0 days**	**Tue 4/4/23**	**Tue 4/4/23**
44	City & DEQ Review Period	20 days	Wed 4/5/23	Tue 5/2/23
45	Prepare Phase 2 Final Contract Documents	20 days	Wed 5/3/23	Tue 5/30/23
46	**Phase 1 Final Contract Documents Complete**	**0 days**	**Tue 5/30/23**	**Tue 5/30/23**
47	**City Council Authorization to Proceed to Phase 2 Bidding**	**0 days**	**Tue 6/6/23**	**Tue 6/6/23**
48	**Phase 2 Bidding and Contracts**	**56 days**	**Tue 6/6/23**	**Wed 8/23/23**
49	First Bid Advertisement Date	0 days	Tue 6/6/23	Tue 6/6/23
50	Bidding	26 days	Wed 6/7/23	Wed 7/12/23
51	**Bid Opening**	**0 days**	**Wed 7/12/23**	**Wed 7/12/23**
52	Bid Evaluation and Recommendation of Award	15 days	Thu 7/13/23	Wed 8/2/23
53	**City Council Award**	**0 days**	**Wed 8/2/23**	**Wed 8/2/23**
54	Finalize Contracts	15 days	Thu 8/3/23	Wed 8/23/23
55	**Phase 2 Construction (Duration to be confirmed during Phase 2 Design)**	**550 days**	**Thu 8/24/23**	**Wed 10/1/25**
56	Notice to Proceed & Contractor Mobilization	10 days	Thu 8/24/23	Wed 9/6/23
57	Construction to Substantial Completion and Punch List	480 days	Thu 9/7/23	Wed 7/9/25
58	Final Completion, Startup & Commissioning	60 days	Thu 7/10/25	Wed 10/1/25
59	**Estimated Mahler WRF Improvements Completion Date**	**0 days**	**Wed 10/1/25**	**Wed 10/1/25**

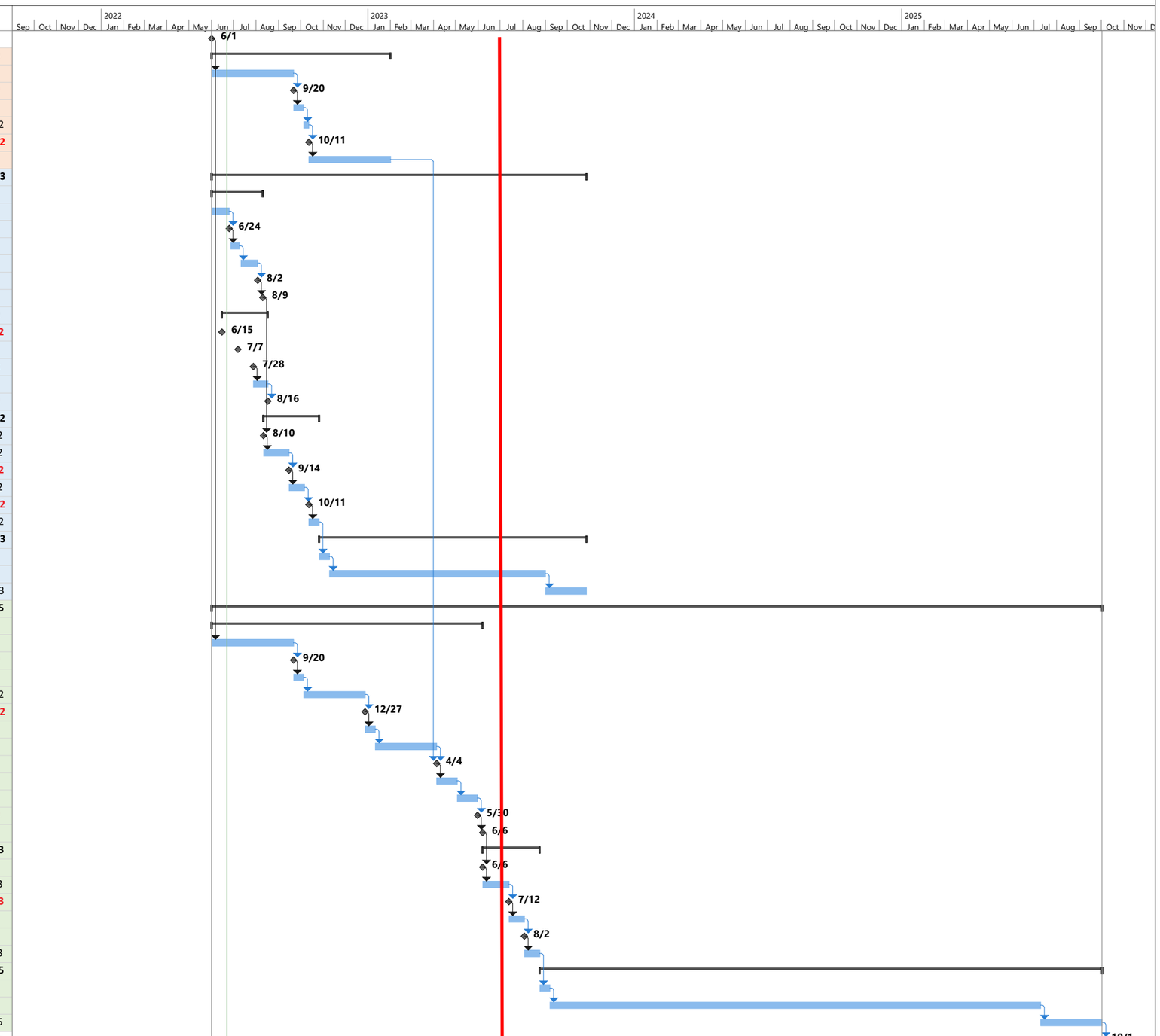

REQUEST FOR COUNCIL ACTION

Title:	Request for Council Action - 9th Avenue Waterline Replacement Project – Contract Award
Preferred Agenda:	August 9, 2022
Submitted By:	Trish Rice, Engineering Tech 2
Reviewed By:	Christy Wurster, City Manager Pro Tem Greg Springman, Public Works Director
Type of Action:	Resolution ____ Motion ___ Roll Call _X_ Other ____
Relevant Code/Policy:	n/a
Towards Council Goal:	Goal 1.1 Develop specific steps for implementation of the adopted infrastructure master plans
Attachments:	9th Avenue Waterline Replacement Project bid tabulation 9th Avenue Waterline Replacement Project contract documents Addendum #1 Pre-Bid Meeting sign-in sheet

Purpose of this RCA:

Staff requests Council approval to award the contract for the 9th Avenue Waterline Replacement Project and authorization to expend overlay funds for Grape St overlay improvements.

Background/Context:

On May 10, 2022, Council approved soliciting bids for the 9th Avenue Waterline Replacement Project. The bid consisted of Schedule A, 9th Avenue between Cedar St and Oak Ter, Grape St and Catalpa St off of 9th Ave; and Schedule B, Alder St from South Hills Trail to 9th Ave, 8th Ave from Alder St to Cedar St, and Birch St; and an additive alternate for Schedule B street paving. The work includes replacement of the waterlines and services, added fire hydrants, and street restoration overlay and corner ramp replacements (which is an ADA requirement when overlaying improved streets).

The construction budget is $985k. The engineer's estimate for Sch A + Sch B was $1,024,320. The project was purposely structured as Schedule A (9th Ave) and Schedule B (8th Ave) so that if the bids came in low enough then we could make the most efficient use of the funds to achieve the most work, and if not then we could also remove a schedule.

The mandatory pre-bid meeting on May 25 was attended by eight contractors. Bids closed on June 8 and we received 6 bids.

All of the bids exceeded the budget. The low base bid (Sch A + Sch B) was Trench Line Excavation, Inc at $1,013,925.55. Staff then evaluated the bids for only Sch A. Low bid was

$663,865.27 also by Trench Line Excavation, Inc. Staff recommends cutting Sch B to remain in budget and award only Sch A. This is well within budget, even after adding the industry standard 15% contingency.

Subsequent to staff's previous presentation on May 25, we recalled that paving Grape St in Sch A, which is an unimproved street, is not fundable by ARPA and will require an alternative funding source to complete. Staff request authorization to allocate streets overlay funds to complete Grape St paving. Grape St paving is estimated at $35-40k. The request is to authorize up to $45k to provide for paving contingency. Sufficient overlay funds are available.

Approx. $290k ARPA funds will remain available to reallocate to another project.

Council has an option to award the full contract if desired by reallocating funds from other water line items and/or streets line items, however staff does not recommend doing so at this time. The needed budget to include 15% contingency on a $1,013,925.55 contract would total $1,166,014.38. Therefore, awarding only Schedule A is recommended.

The Challenge/Problem:

How do we make efficient use of limited funds to complete needed water projects?

Stakeholders:

- Sweet Home Residents – Residents deserve well-maintained City infrastructure that meets their needs and improves their quality of life.
- Sweet Home City Council – The City Council has a goal to provide viable and sustainable infrastructure that serves development and improves residents' quality of life.
- Sweet Home City Staff – City Staff have an interest in completing projects that empower them to meet the Council's goals and which reduce staff time spent on reactive repairs.

Issues and Financial Impacts:

The low bid for Sch A only is $663,865.27, well within budget, even with 15% contingency.

The project will be funded using ARPA funds as per previous Council direction to allocate $1M to the small diameter replacement program. Subsequent to staff's previous presentation on May 25, we recalled that paving Grape St in Sch A, which is an unimproved street, is not fundable by ARPA and will require an alternative funding source to complete. Staff request authorization to allocate streets overlay funds to complete Grape St paving. Grape St paving is estimated at $35-40k. The request is to authorize up to $45k to provide for paving contingency. Sufficient overlay funds are available.

Approx. $290k ARPA funds will remain available to reallocate to another project.

Elements of a Stable Solution:

A stable solution will provide efficient completion of needed water maintenance and improvements.

Options:

1. *Option 1 – Award the contract for Schedule A to Trench Line Excavation, Inc., for $663,865.27, and reallocate $45k overlay funds for Grape St paving improvements.* Staff will execute the contract and give the contractor notice to proceed.
2. *Option 2 – Award the contract for Schedule A to Trench Line Excavation, Inc. and remove Grape St paving from the project.* Staff will execute the contract and give the contractor notice to proceed. The project cost would be reduced to approx. $630k.
3. *Option 1 – Award the contract for the full project for $1,013,925.55 to Trench Line Excavation, Inc., and allocate additional funds to complete the project.* Not recommended. The needed budget to include 15% contingency on a $1,013,925.55 contract would total $1,166,014.38.

4. *Option 4 – Reject all bids and re-bid the project.* This option will delay the completion of needed water system work and may result in more expensive bids now that the previous bid results are public knowledge.
5. *Option 5 – Reject all bids and cancel the project.* This option will delay the completion of needed water system work. The project will remain in the CIP and the unspent funds will be available for re-budgeting.

Recommendation:

Staff recommends *Option 1 – Award the contract for Schedule A to Trench Line Excavation, Inc. for $663,865.27, and reallocate $45k overlay funds for Grape St paving improvements.*

City of Sweet Home Public Works
1400 24th Ave
Sweet Home, OR 97386

City of Sweet Home
9th Ave Waterline Replacement Project
Bid Tabulation

Bids closed 6/8/2022
Bid tabulation completed 6/9/2022

				Wildish Construction Co		ML Houck Construction Co		Pacific Excavation, Inc*		Jesse Rodriguez Construction, LLC*		North Santiam Paving Co		Trench Line Excavation, Inc*	
	ITEM DESCRIPTION WITH BID UNIT PRICE	UNIT	APPROX. QTY	UNIT PRICE	TOTAL AMOUNT	UNIT PRICE	TOTAL AMOUNT	UNIT PRICE	TOTAL AMOUNT	UNIT PRICE	TOTAL AMOUNT	UNIT PRICE	TOTAL AMOUNT	UNIT PRICE	TOTAL AMOUNT
1	**Mobilization, Cleanup, Traffic & Erosion Control**	LS	1	$105,000.00	$105,000.00	$116,800.00	$116,800.00	$160,000.00	$160,000.00	$65,000.00	$65,000.00	$135,000.00	$135,000.00	$97,542.41	$97,542.41
				Mobilization	**$105,000.00**		**$116,800.00**		**$160,000.00**		**$65,000.00**		**$135,000.00**		**$97,542.41**
Bid Schedule A. 9th Avenue, Grape Street, Catalpa Street															
2	4" AWWA C900 PVC	LF	640	$72.00	$46,080.00	$58.00	$37,120.00	$64.00	$40,960.00	$75.00	$48,000.00	$68.50	$43,840.00	$52.94	$33,881.60
3	4" Fittings, Valves, and Appurtenances	LS	1	$8,000.00	$8,000.00	$9,585.00	$9,585.00	$2,300.00	$2,300.00	$7,960.00	$7,960.00	$10,200.00	$10,200.00	$6,605.27	$6,605.27
4	6" Fittings, Valves, and Appurtenances	LS	1	$15,000.00	$15,000.00	$8,158.00	$8,158.00	$8,700.00	$8,700.00	$5,656.00	$5,656.00	$7,100.00	$7,100.00	$5,897.64	$5,897.64
5	8" AWWA C900 PVC	LF	1460	$86.00	$125,560.00	$80.00	$116,800.00	$68.00	$99,280.00	$99.00	$144,540.00	$75.00	$109,500.00	$73.53	$107,353.80
6	8" Fittings, Valves, and Appurtenances	LS	1	$32,000.00	$32,000.00	$32,975.00	$32,975.00	$32,000.00	$32,000.00	$34,654.00	$34,654.00	$45,800.00	$45,800.00	$25,865.93	$25,865.93
7	1" AWWA C904 PEX Meter Service - Short Side	EA	22	$2,200.00	$48,400.00	$1,495.00	$32,890.00	$1,725.00	$37,950.00	$1,495.00	$32,890.00	$1,960.00	$43,120.00	$1,873.32	$41,213.04
8	1" AWWA C904 PEX Meter Service - Long Side	EA	27	$3,200.00	$86,400.00	$2,175.00	$58,725.00	$2,160.00	$58,320.00	$1,895.00	$51,165.00	$2,750.00	$74,250.00	$2,320.58	$62,655.66
9	Fire Hydrant Assembly (inc. Tee to hydrant)	EA	2	$13,000.00	$26,000.00	$8,315.00	$16,630.00	$9,600.00	$19,200.00	$8,200.00	$16,400.00	$11,000.00	$22,000.00	$8,644.55	$17,289.10
10	Connect to Existing	EA	4	$2,800.00	$11,200.00	$2,320.00	$9,280.00	$946.00	$3,784.00	$3,795.00	$15,180.00	$5,150.00	$20,600.00	$3,266.73	$13,066.92
11	Manhole Raise	EA	13	$1,900.00	$24,700.00	$255.00	$3,315.00	$335.00	$4,355.00	$975.00	$12,675.00	$250.00	$3,250.00	$674.44	$8,767.72
12	Valve Can Raise	EA	4	$745.00	$2,980.00	$200.00	$800.00	$307.00	$1,228.00	$450.00	$1,800.00	$180.00	$720.00	$633.35	$2,533.40
13	ADA Ramp Replace	EA	6	$10,200.00	$61,200.00	$6,690.00	$40,140.00	$3,400.00	$20,400.00	$7,900.00	$47,400.00	$14,600.00	$87,600.00	$6,237.82	$37,426.92
14	Sidewalk and Curb Replacement	LF	160	$200.00	$32,000.00	$192.25	$30,760.00	$132.00	$21,120.00	$136.00	$21,760.00	$208.00	$33,280.00	$145.43	$23,268.80
15	Trench - Level 2, 1/2" ACP Mixture	TON	410	$248.00	$101,680.00	$175.50	$71,955.00	$258.00	$105,780.00	$155.00	$63,550.00	$155.00	$63,550.00	$134.86	$55,292.60
16	Overlay - Level 2, 1/2" ACP Mixture	TON	855	$168.00	$143,640.00	$158.25	$135,303.75	$137.00	$117,135.00	$137.00	$117,135.00	$161.00	$137,655.00	$135.56	$115,903.80
17	Driveways - Level 2, 1/2" ACP Mixture	TON	15	$570.00	$8,550.00	$335.00	$5,025.00	$350.00	$5,250.00	$265.00	$3,975.00	$625.00	$9,375.00	$437.96	$6,569.40
18	Pavement Markings	LS	1	$7,000.00	$7,000.00	$4,578.00	$4,578.00	$3,900.00	$3,900.00	$3,300.00	$3,300.00	$5,300.00	$5,300.00	$2,731.26	$2,731.26
				Sch A Subtotal	**$780,390.00**		**$614,039.75**		**$581,662.00**		**$628,040.00**		**$717,140.00**		**$566,322.86**
Bid Schedule B. 8th Avenue, Birch Street, Alder Street															
19	6" AWWA C900 PVC	LF	380	$76.00	$28,880.00	$60.25	$22,895.00	$61.00	$23,180.00	$87.00	$33,060.00	$70.00	$26,600.00	$62.72	$23,833.60
20	6" Fittings, Valves, and Appurtenances	LS	1	$3,400.00	$3,400.00	$4,150.00	$4,150.00	$2,160.00	$2,160.00	$2,346.00	$2,346.00	$3,750.00	$3,750.00	$1,599.42	$1,599.42
21	8" AWWA C900 PVC	LF	1285	$90.00	$115,650.00	$80.00	$102,800.00	$75.00	$96,375.00	$99.00	$127,215.00	$98.60	$126,701.00	$77.78	$99,947.30
22	8" Fittings, Valves, and Appurtenances	LS	1	$30,000.00	$30,000.00	$24,610.00	$24,610.00	$19,500.00	$19,500.00	$23,858.00	$23,858.00	$31,500.00	$31,500.00	$19,575.94	$19,575.94
23	10" AWWA C900 PVC	LF	15	$300.00	$4,500.00	$117.00	$1,755.00	$189.00	$2,835.00	$155.00	$2,325.00	$181.00	$2,715.00	$292.44	$4,386.60
24	10" Fitting, Valves, and Appurtenances	LS	1	$5,000.00	$5,000.00	$5,305.00	$5,305.00	$4,900.00	$4,900.00	$5,459.00	$5,459.00	$6,600.00	$6,600.00	$3,865.27	$3,865.27
25	1" AWWA C904 PEX Meter Service - Short Side	EA	7	$2,500.00	$17,500.00	$1,395.00	$9,765.00	$1,840.00	$12,880.00	$1,550.00	$10,850.00	$2,050.00	$14,350.00	$1,946.87	$13,628.09
26	1" AWWA C904 PEX Meter Service - Long Side	EA	13	$3,500.00	$45,500.00	$2,025.00	$26,325.00	$2,470.00	$32,110.00	$1,895.00	$24,635.00	$2,700.00	$35,100.00	$2,316.49	$30,114.37
27	Connect to Existing	EA	4	$3,500.00	$14,000.00	$2,150.00	$8,600.00	$1,100.00	$4,400.00	$3,700.00	$14,800.00	$3,800.00	$15,200.00	$3,094.11	$12,376.44
28	Manhole Raise	EA	3	$1,900.00	$5,700.00	$255.00	$765.00	$560.00	$1,680.00	$950.00	$2,850.00	$250.00	$750.00	$953.72	$2,861.16
29	Valve Can Raise	EA	2	$745.00	$1,490.00	$200.00	$400.00	$307.00	$614.00	$555.00	$1,110.00	$170.00	$340.00	$524.11	$1,048.22
30	Catchbasin Installation	LS	1	$12,000.00	$12,000.00	$3,225.00	$3,225.00	$7,000.00	$7,000.00	$6,000.00	$6,000.00	$6,500.00	$6,500.00	$1,668.12	$1,668.12
31	ADA Ramp Replace	EA	3	$17,000.00	$51,000.00	$6,690.00	$20,070.00	$3,400.00	$10,200.00	$7,900.00	$23,700.00	$15,000.00	$45,000.00	$7,223.46	$21,670.38
32	Sidewalk and Curb Replacement	LF	40	$290.00	$11,600.00	$192.25	$7,690.00	$132.00	$5,280.00	$136.00	$5,440.00	$255.00	$10,200.00	$150.38	$6,015.20
33	Trench - Level 2, 1/2" ACP Mixture	TON	235	$198.00	$46,530.00	$175.50	$41,242.50	$264.00	$62,040.00	$195.00	$45,825.00	$155.00	$36,425.00	$156.91	$36,873.85
34	Overlay - Level 2, 1/2" ACP Mixture	TON	325	$172.00	$55,900.00	$158.25	$51,431.25	$137.00	$44,525.00	$137.00	$44,525.00	$161.00	$52,325.00	$139.87	$45,457.75
35	Driveways - Level 2, 1/2" ACP Mixture	TON	20	$520.00	$10,400.00	$335.00	$6,700.00	$380.00	$7,600.00	$265.00	$5,300.00	$625.00	$12,500.00	$410.41	$8,208.20
36	Birch Street Grind	LS	1	$9,000.00	$9,000.00	$11,900.00	$11,900.00	$47,900.00	$47,900.00	$14,960.00	$14,960.00	$4,200.00	$4,200.00	$16,930.37	$16,930.37
				Sch B Subtotal	**$468,050.00**		**$349,628.75**		**$385,179.00**		**$394,258.00**		**$430,756.00**		**$350,060.28**
Bid Schedule B. 8th Avenue Alder Street Paving Overlay Additive Alternate															
37	Overlay - Level 2, 1/2" ACP Mixture	TON	225	$185.00	$41,625.00	$135.00	$30,375.00	$140.00	$31,500.00	$134.00	$30,150.00	$161.00	$36,225.00	$142.52	$32,067.00
38	Driveways - Level 2, 1/2" ACP Mixture	TON	20	$550.00	$11,000.00	$335.00	$6,700.00	$360.00	$7,200.00	$265.00	$5,300.00	$625.00	$12,500.00	$410.41	$8,208.20
39	Pavement Markings	LS	1	$6,100.00	$6,100.00	$3,705.00	$3,705.00	$3,210.00	$3,210.00	$2,500.00	$2,500.00	$7,100.00	$7,100.00	$1,638.75	$1,638.75
40	Manhole Raise	EA	2	$1,900.00	$3,800.00	$255.00	$510.00	$417.00	$834.00	$950.00	$1,900.00	$250.00	$500.00	$1,266.71	$2,533.42
41	Valve Can Raise	EA	3	$745.00	$2,235.00	$200.00	$600.00	$343.00	$1,029.00	$555.00	$1,665.00	$205.00	$615.00	$633.60	$1,900.80
				Sch B Additive Alternate Subtotal	**$64,760.00**		**$41,890.00**		**$43,773.00**		**$41,515.00**		**$56,940.00**		**$46,348.17**

Total for Mobilization + Sch A	**$885,390.00**	**$730,839.75**	**$741,662.00**	**$693,040.00**	**$852,140.00**	**$663,865.27**
Total for Mobilization + Sch A + Sch B	**$1,353,440.00**	**$1,080,468.50**	**$1,126,841.00**	**$1,087,298.00**	**$1,282,896.00**	**$1,013,925.55**
Total for Mobilization + Sch A + Sch B + Additive Alternate	**$1,418,200.00**	**$1,122,358.50**	**$1,170,614.00**	**$1,128,813.00**	**$1,339,836.00**	**$1,060,273.72**

Apparent low bidder

* These bidders included Mobilization in their Schedule A subtotal as read out at bid opening, which resulted in Mobilization being counted twice when subtotaling the project without Schedule B at bid opening.
When this clerical error is accounted for as per OAR 125-249-0350 and OAR 137-049-0350(2)(b), the totals of all unit costs correctly sum up and agree with the bid totals as read out at bid opening.

FOR CONSTRUCTION OF

CITY OF SWEET HOME
9th Avenue Waterline Replacement Project

Department of Public Works, Engineering Division
1400 24th Avenue
Phone 541.367.6359

May 13, 2022

TABLE OF CONTENTS 2
INSTRUCTIONS TO BIDDERS 3
BID 4
CONTRACT 8
BID BOND 10
PAYMENT BOND 11
PERFORMANCE BOND 14
FIRST-TIER SUBCONTRACTOR DISCLOSURE FORM 17
BID FORM 18
PREVAILING WAGE for PUBLIC WORKS CONTRACTS 19
PAYMENT OF MEDICAL CARE AND PROVIDING WORKERS' COMPENSATION 19
PUBLIC WORKS BOND 20
RECIPROCAL PREFERENCE LAW 20
PROJECT DRAWINGS (SEPARATE ATTACHMENT) 21
SPECIAL PROVISIONS I 22
SPECIAL PROVISIONS II 28

INSTRUCTIONS TO BIDDERS

A mandatory pre-bid meeting will be held at **2:00 PM** local time on **Wednesday May 25, 2022.**

Sealed bids for the **9th Avenue Waterline Replacement Project** will be received on behalf of the City of Sweet Home by Greg Springman at **1400 24th Ave, Sweet Home, OR 97386** until bid closing time of **2:00 PM local time on Wednesday, June 08, 2022**. Bids will be opened and publicly read immediately following bid closing time. The outside of the Bid envelopes shall be clearly marked **9th Avenue Waterline Replacement Project** and show (1) the Bidder's name, (2) the Bid Opening time and date and (3) the Bidder's CCB license number, and shall be delivered to the City of Sweet Home by or before the above listed bid closing time.

The City will require that for projects greater than $100,000, the "First-Tier Subcontractor Disclosure Form" as contained in the bidding documents, be submitted with the bid documents in a separate sealed envelope by the Bid Closing or within two working hours of the Bid Closing, not later than **4:00 PM local time Wednesday, June 08, 2022.** The envelope shall be clearly marked "**Disclosure Form for 9th Avenue Waterline Replacement Project**", and shall include (1) Bidder's name, and (2) the submittal time and date deadline. Bidders who fail to submit the required disclosure will be considered non-responsive.

Submittals by Facsimile or Electronic Data Interchange (EDI) will not be accepted.

Contract specifications, and plan sets – in PDF file format –, may be obtained from the Bids and RFPs menu off the Government on the City of Sweet Home website at https://www.sweethomeor.gov/rfps. Questions about the project elements may be directed to Trish Rice, Engineering Technician II, Sweet Home Public Works, 1400 24th Avenue, Sweet Home, Oregon, 97386, contact by phone at 541-818-8037, or email price@sweethomeor.gov. Questions must be submitted in writing prior to 4:00 PM local time on Wednesday, June 1, 2022 to allow for timely issuance of any addenda.

Each bidder must possess or have access to the 2021 Oregon Standard Specifications for Construction. These are available online at: https://www.oregon.gov/ODOT/Business/Pages/Standard_Specifications.aspx

No bid shall be received or considered unless the bidder is registered with the Construction Contractors Board for construction projects or licensed with the Landscape Contractors Board for landscaping projects.

Bidders Checklist: All prospective bidders must include the following:

- Each bid must contain a statement as to whether the Bidder is a resident Bidder, as defined in ORS 279C.365. In determining the lowest responsible bidder, the City of Sweet Home will, for the purpose of awarding the Contract, add a percentage increase on the bid of a nonresident bidder equal to the percentage, if any, of the preference given to that bidder in the state in which the bidder resides.
- All bids shall contain a statement declaring that the Bidder agrees to comply with the provisions of ORS 279C. 800 to 279C.870 regarding payment of prevailing wages and the Bureau of Labor and industries fee.
- The project bid document set, with names and corporate information of the bidder, schedule of prices completely filled out, additional addendum items if any; however, project drawings do not need to be included.
- The First-Tier Subcontractor Disclosure Form as noted above.
- Each bid must contain Surety and Bond information.
- A 10% bid bond, certified check, or cashier's check shall accompany each bid on all projects and shall be forfeited if the bidder fails to enter into a Contract with the City of Sweet Home within ten (10) days after the date of the Notice of Award.

The City may reject any bid not in compliance with all prescribed public procedures and requirements, and may reject for good cause any and all submittals upon a finding of the City that it is in the best interest to do so, as determined solely by the City.

To the Honorable Mayor and City Council
City of Sweet Home, Oregon 97386

BIDDER'S DECLARATION AND UNDERSTANDING

The undersigned Bidder declares that the Contract Documents for the construction of the proposed improvement have been carefully examined; that the site has been personally inspected; that the Bidder is satisfied as to the quantities of materials, items of equipment and conditions or work involved including the fact that the description of the quantities of work and materials as included herein is brief and is intended only to indicate the general nature of such items and to identify the said quantities with the detailed requirements of the Contract Documents; and that the bid is made according to the provisions and under the terms of the Contract Documents, which documents are hereby made a part of this bid. The bidder has received and considered the following Addenda to specifications, if any, of revisions and/or additions to the plans;
No. _____ to No. _____ , inclusive; Plan Revision Sht. No. _____ ; Plan Addition Sht. No. _____ .

The minimum bid submittal requirement for this project shall include this Bid form and schedule(s) of prices, bid bond as required, first-tier subcontractor form and all other required attachments. All Contract Documents are included in this Bid by reference, whether attached or not.

The Bidder further declares that the only persons or parties interested in this bid are those named herein: that this bid is in all respects fair and without fraud: that it is made without collusion with any official of the City of Sweet Home, and that the bid is made without any connection or collusion with any person making another bid on this Contract.

The Bidder further declares that the provisions required by the Oregon Revised Statutes ORS 279C.800 relating to Prevailing Wage Rates shall be included in and made a part of the Contract. The Bidder further declares that all applicable sections relating to Public Contracts as set forth in ORS 279A to 279C have been complied with in making this bid, and, as required, shall be made a part of the Contract Documents as completely as if the same were fully set forth herein.

The Bidder further declares that they are registered, or shall become registered if awarded a contract, with the Construction Contractor's Board, and possess such additional licenses and certifications as required by law for the performance of the Work proposed herein as required by OAR 812.

The Bidder further agrees that its own judgment has been exercised regarding the interpretation of subsurface information and all data, which it believes pertinent from the Engineer, Owner, and other sources in arriving at these conclusions, have been utilized.

CONTRACT EXECUTION, BONDS AND CERTIFICATES OF INSURANCE

The Bidder agrees that if this bid is accepted, a Contract with the City of Sweet Home, Oregon, will be executed within ten (10) days after the date of the Notice of Award, in the form of Contract annexed hereto, and will at that time, deliver to the City of Sweet Home the Performance and Payment Bond required by Subsection 00130.4 of the Oregon Standard Specifications for Construction (as revised), the certificates of insurance as specified in these documents, and will, to the extent of this bid, furnish all machinery, tools, apparatus, and other means of construction and do the work and furnish all of the materials necessary to complete the work in the manner, in the time, and according to the methods as specified or shown in the Contract Documents.

It is the intent of the City of Sweet Home to award the Contract to the lowest responsible Bidder, provided the Bid has been submitted in accordance with the requirements of the Contract Documents and does not exceed the funds available. The City of Sweet Home shall have the right to waive informalities or irregularities in a Bid received and to accept the Bid which, in the City of Sweet Home's judgment, is in the City of Sweet Home's own best interest. In submitting this Bid, it is understood that the City of Sweet Home reserves the right to accept or reject in part or in whole, any and all bids received, to adjust the scope of the work within reasonable limits, to postpone award for a reasonable time, or award to the selected firm or contractor any subsequent engineering design and construction services contract, part or in whole, for recommended capital projects as allowed by law. The RFB does not commit the City of Sweet Home to pay any costs incurred to prepare a bid.

BIDDING, CONSTRUCTION, AND COMPLETION DATES

Mandatory pre-bid meeting will be held at the City of Sweet Home Public Works Department at 1400 24th Ave
2:00pm on Wednesday, May 25, 2022 *(Time & Date)*

Deadline for submitting written questions for inclusion in addenda:
4:00pm on Wednesday, June 01, 2022 *(Time & Date)*

Sealed bids will be received at the City of Sweet Home Public Works Department at 1400 24th Ave until
2:00pm on Wednesday, June 08, 2022 *(Time & Date)*

with 1st Tier Subcontractor Disclosure Forms until
4:00pm on Wednesday, June 08, 2022 *(Time & Date)*

The Bidder agrees to begin work within 10 calendar days after the date of the Notice to Proceed issued on or near;
June 27, 2022 *(Date)*

and, to complete the construction, in all respects by;
June 30, 2023 *(Date)*

Completion schedule – if not defined to certain date above – shall be set per #s of days as follows:
180 *(Days)*

Calendar days that inclement weather or adverse site conditions preclude normal construction activities shall be considered exempt.

RETAINAGE

To ensure the proper performance of the Contract, the City shall retain five (5%) of the amount of each progress payment until final completion and acceptance of all work covered by this contract.

LIQUIDATED DAMAGES

In the event the Bidder is awarded the Contract and shall fail to complete the work within the time stated above or extended time agreed upon, as more particularly set forth in the Contract Documents, liquidated damages, if required as specified in the Special Provisions I portion of this contract documents, shall be paid to the City of Sweet Home, Oregon, as provided under Subsection 00180.85 of the Oregon Standard Specifications.

BID BOND

Accompanying this bid is a certified check, cashier's check or Bidder's Bond in the sum of

_____ Dollars & Cents ($ _____), *(10% of total contract price)*

according to the General Requirements of the Contract Documents which is to be forfeited as liquidated damages, if, in the event that this bid is accepted, and the Bidder shall fail to execute the Contract and furnish satisfactory Performance and Payment Bond under the conditions and within the time specified in the Contract Documents; otherwise said check or bond is to be returned to the Bidder.

SURETY

If the Bidder is awarded a construction Contract on this bid, the Surety which will provide the Performance and Payment Bond will be:

_____ *(Name)*

_____ *(Address)*

_____ *(City, State)*

LUMP SUM OR UNIT PRICE WORK, MANNER of PAYMENT

The Bidder further proposes to accept as full payment for the work proposed herein the amounts computed under the provisions of the Contract Documents and based on the following lump sum or unit price amounts, it being expressly understood that the unit prices are independent of the exact quantities involved. The Bidder agrees that the lump sum prices and the unit prices represent a true measure of the labor and materials required to perform the work, including all allowances for overhead and profit for each type and unit of work called for in these Contract Documents. The amounts shall be shown in both words and figures. In the case of a discrepancy, the amount shown in words shall govern.

BIDDER

The name of the Bidder submitting this bid is:

_____ *(Name)*

_____ *(Address)*

_____ *(City, State, Zip)*

_____ *(Telephone)*

_____ *(Email)*

_____ *(Federal Tax ID No)*

_____ *(Construction Contractor Board No)*

_____ *(Workers' Comp Ins. Co.)*

_____ *(Workers' Comp Policy/Binder No)*

The above Bidder's name and address is the address to which all communications concerned with this bid and with the Contract shall be sent.

In accordance with ORS 279C.365, Bidder hereby declares that it (circle correct designation) **is / is not** a resident Bidder. If the bidder is non-resident, indicate _____ % preference of your state resident bidders.

In accordance with ORS 279C.800 to 279C.870, Bidder hereby declares that it complies with provisions for labor, materials, Industrial Accident Fund, liens, withholding taxes, and employee drug testing.

The names of the principal officers of the corporation submitting this bid, or of the partnership, or of all persons interested in this bid as principals, are as follows:

_____ _____

_____ _____

_____ _____

If Sole Proprietor of Partnership: IN WITNESS hereto the undersigned has set his/her hand this _____day of _____, 20_____.

_____ *(Signature of Bidder)*

_____ *(Title)*

If Corporation: IN WITNESS WHEREOF the undersigned corporation has caused this instrument to be executed and its seal affixed by its duly authorized officers this _____ day of _____, 20____.

_____ *(Name of Corporation)*

_____ *(By)*

_____ *(Title)*

_____ *(Attest)*

Secretary (*Mandatory Signature*)

(SEAL)

CONTRACT

THIS CONTRACT, made between the CITY OF SWEET HOME, a municipal corporation, hereinafter called "Owner" and _____. hereinafter called "Contractor".

WITNESSETH:

The Contractor, in consideration of the sums to be paid and other covenants herein contained, agrees to perform and complete the work herein described and to furnish all necessary machinery, tools, apparatus, equipment, supplies, materials, and labor and perform all work in accordance with the 2021 Oregon Standard Specifications for Construction, the Special Specifications bound herewith, and in accordance with such alterations or modifications of the same as may be made by the City, and according to such directions as may from time to time be made or given by the Engineer under the authority and within the meaning and purpose of this Contract. This agreement shall be binding upon the heirs, executors, administrators, successors, and assigns of the Contractor.

The applicable Drawings, the Oregon Standard Specifications for Construction, the Special Specifications, and the Schedule of Contract Prices bound herewith are hereby specifically referred to and by reference made a part hereof, and shall by such reference have the same force and effect as though all of the same were fully inserted herein.

The Contractor shall faithfully complete and perform all of the obligations of this Contract, and in particular, shall promptly, as due, make payment of all just debts and obligations incurred in the performance of said Contract and shall not permit any lien or claim to be filed or prosecuted against the City.

The Contractor, its subcontractors, if any, and all employers working under this Contract are subject employers under the Oregon Workers' Compensation Law and shall comply with ORS 656.017, which requires them to provide workers' compensation coverage for all their subject workers.

The Contractor agrees to protect, indemnify, and hold harmless the Owner, its officers, agents, and employees harmless against any and all loss, claims, or suits (including costs and attorney's fees) for or on account of injury to or death of persons, damage to, or destruction of property belonging to either the Owner or others occurring by reason of the act or neglect of the Contractor, Contractor's employees, or agents (including subcontractors) in connection with the performance of this Contract.

It is expressly understood that this Contract shall be governed by the laws of the State of Oregon. The statutes of the State of Oregon for public works contracts, specifically but not exclusively ORS 279C, as amended or superseded, including the latest additions and revisions, are incorporated by reference as part of the contract documents, and the party contracting with the Owner hereby covenants and agrees to comply with all of the obligations and conditions applicable to public contracts pursuant to ORS 279C as though each obligation or condition were set forth fully herein. In addition, if the contract identified above calls for a public improvement as that term is defined by ORS 279A.010, the party contracting with the Owner further agrees to comply with all obligations and conditions applicable to public contracts for public improvements pursuant to ORS 279C as though each obligation or condition were set forth fully herein.

The Contractor further declares by the signing of this Contract that all the provisions required by ORS 279A to 279C relating to Public Contracts, Purchasing, and Prevailing Wage Rates for work performed under the Contract with the Owner are made part of this Contract as completely as if the same were fully set forth herein.

In consideration of the faithful performance of all of the obligations herein set out and in consideration of the faithful performance of this Contract, the Owner agrees to pay to the Contractor the amount earned, as determined from the actual quantities of work performed and prices and other basis of payment specified, taking into consideration any amounts that may be deductible, under the terms of the Contract.

The Contractor agrees to complete the work within the time specified herein and to accept as full payment hereunder the amounts computed as determined by the Contract Documents and based on the said bid.

Said improvements shall be completed by the date specified in said Contract Documents and if not so completed, unless said time for completion is extended, as provided in the Contract Documents, or if extended, if the same is not completed within the time extended, the City will be caused to incur liquidated damages as specified in the

Contract Documents. Liquidated damages shall be retained out of any monies due or to become due under this agreement.

Payments shall be made as provided in the Contract Documents.

Should suit or action be undertaken to enforce any of the terms of this agreement or to seek damages for its breach, the prevailing party shall be entitled to an award of its reasonable attorney fees, including those incurred on appeal.

IN WITNESS WHEREOF the parties hereto have executed or caused to be executed by their duly authorized officials, the Contract and affixed their respective official seals.

CONTRACTOR:

DATE: _____

By: _____

Title: _____

By: _____

Title: _____

(Note: Signatures of two officers are required for a corporation.)

_____

Corporation Tax No. (if incorporated)

_____

Social Security No. (if individual)

OWNER:
CITY OF SWEET HOME, OREGON:

APPROVED AS TO FORM:

_____

City Attorney

DATE: _____

By: _____

Public Works Director

By: _____

City Manager

BID BOND

DATE. _____

BOND NO. _____.

AMOUNT OF BID: _____($).

KNOW ALL MEN BY THESE PRESENTS, that we

_____ *(Name of Contractor)*

as Principal, hereinafter called the PRINCIPAL, and

_____ *(Name of Surety)*

a corporation duly organized under the laws of the State of _____ having its principal place of business at _____, in the State of _____, and authorized to do business in the State of Oregon, as SURETY, hereinafter called the Surety, are held firmly and bound unto the City of Sweet Home, Oregon, as Obligee, hereinafter called the OBLIGEE, in the sum of

_____ Dollars & Cents ($ _____), *(10% of total contract price)*

for the payment of which sum well and truly to be made, the said Principal and the said Surety, bind ourselves, our heirs, executors, administrators, successors, and assigns, jointly and severally, firmly by these presents.

THE CONDITION OF THIS BOND IS SUCH THAT:

WHEREAS, the PRINCIPAL is herewith submitting his or its Bid for _____, said Bid, by reference thereto, being hereby made a part hereof.

NOW, THEREFORE, if the Obligee shall accept the bid of the Principal and the Principal shall enter into a Contract with the Obligee in accordance with the terms of such bid, and give such bond or bonds as may be specified in the bidding or Contracts Documents with good and sufficient surety for the faithful performance of such Contract and for the prompt payment of labor and materials furnished in the prosecution thereof, or on the event of the failure of the Principal to enter such Contract and give such bond or bonds, if the Principal shall pay to the Obligee the difference not to exceed the penalty hereof between the amount specified in said bid and such larger amount for which the Obligee may in good faith contract with another party to perform the Work covered by said bid, then this obligation shall be null and void, otherwise to remain in full force and effect.

A certified copy of the agent's power-of-attorney must be attached hereto.

Signed and sealed this _____ day of _____, 20____

PRINCIPAL	SURETY
By:	By:
Title:	Title:

IMPORTANT: Surety companies executing BONDS must appear on the Treasury Department's most current list (Circular 570 as amended) and be authorized to transact business in the state where the project is located.

PAYMENT BOND

DATE. _____

BOND NO. _____

TOTAL BID AMOUNT: _____

KNOW ALL MEN BY THESE PRESENTS, that we

_____ *(Name of Contractor)*

as CONTRACTOR (Principal), and

_____ *(Name of Surety)*

a corporation, duly organized to do a general surety business in the State of Oregon as SURETY, jointly and severally, bind ourselves, our heirs, executors, administrators, successors, and assigns firmly in the sum of

_____ Dollars & Cents ($ _____), *(total contract price)*

to the Owner for the payment of labor, materials, and equipment furnished for the use in the performance of the Contract, which is incorporated herein by reference. The Contractor and Surety, jointly and severally, agree that this Bond shall be deemed amended automatically and immediately, without formal and separate amendments, hereto, upon amendment to the Contract not increasing the Contract Price more than twenty five percent (25%). The term "amendment wherever used in this Bond, and whether referring to this Bond, the Contract, or the loan documents, shall include any alteration, extension, or modification of any character whatsoever.

With respect to the Owner, this obligation shall be null and void if the Contractor: 1) promptly makes payment, directly or indirectly, for all sums due Claimants, and 2) defends, indemnifies and holds harmless the Owner from claims, demands, liens or suits by any person or entity whose claim, demand, lien or suit is for the payment of labor, materials, or equipment furnished for use in the performance of the Contract.

With respect to Claimants, this obligation shall be null and void if the contractor promptly makes payment, directly or indirectly, for all sums due.

A Claimant is defined as persons claiming to have supplied labor or materials, for the prosecution of the work provided for in the Construction Contract, including any person having a direct contractual relationship with the Contractor furnishing the Bond or direct contractual relationship with any subcontractor, or an assignee of such person, or a person claiming monies due to the State Accident Insurance Fund Corporation, State Department of Unemployment Trust Fund, or the Department of Revenue, in connection with the performance of the Construction contact, has a right of action on the Contractor's Board as provided in ORS 279C.380 only if: 1) the person or the assignee of the person has not been paid in full; and 2) the person gives written notice of claim, as prescribed in ORS 279C.605, to the Contractor and the Secretary of State, in the Construction Contract with a state agency, or the clerk or auditor if the public body is other than a state agency.

The intent of this Bond shall be to include without limitation, the terms 'labor, materials or equipment, that part of water, gas, power, light, heat, oil. Gasoline, telephone service or rental equipment used in the Contract, architectural and engineering services required for performance of the work of the Contractor, and all other items for which a mechanic's lien may be asserted in the jurisdiction where the labor, materials or equipment were furnished.

The Contractor and Surety hereby jointly and severally agree with the Owner that every Claimant, who has not paid in full before the expiration of a period of one hundred twenty (120) days after the date on which the last of such Claimant's work or labor was done or performed, or materials were furnished by such Claimant, for which claim is made, may have a right of action on this Bond. The Owner shall not be liable for the payment of any costs or

expenses including attorneys' fees which the Owner may incur in connection with its defense of any such right of action.

No suit or action shall be commence on this Bond by any Claimant: 1) Unless claimant shall have given written notice to the Contractor and the Secretary of State, if the Contractor with a state agency, or the clerk or auditor of the public body which let the Contract if the public body is other than a state agency, within one hundred twenty (120) days after such Claimant did or performed the last of the work or labor, or furnished the last of the materials for which said claim is made, stating with substantial accuracy the amount claimed and the name of the party to whom the materials were furnished, or for whom the work or labor was done or performed. Such notice shall be served by mailing the same by registered mail or certified mail, postage prepaid, or hand delivered in an envelope addressed to the Contractor, and such other entity who is to receive notice, at any place where that party maintains an office, conducts business, or at its residence, or delivered to that location. 2) After the expiration of two (2) years from the date on which the Claimant last performed labor, materials or equipment. Any limitation embodied in this Bond, which is prohibited by any law controlling the project, shall be deemed to be amended so as to be equal to the minimum period of limitation permitted by law.

When the Claimant has satisfied the conditions of the above, the Surety shall promptly and at the Surety's expense take the following actions: 1) Send an answer to the Claimant, with a copy to the Owner, within forty-five (45) days after receipt of the claim, stating the amount that are undisputed and the basis for challenging any amount that are disputed. 2) pay or arrange for payment of any undisputed amounts.

The Surety's total obligation shall not exceed the amount of the bond and any amendment thereto as outlined above, and the amount of this Bond shall be credited for any payments made in good faith by Surety.

Amounts owed by the Owner to the Contractor under the Contract shall be used for the performance of the Contract and to satisfy claims, if any, under any Construction Performance Bond. By the Contractor furnishing and the Owner accepting this Bond, they agree that all funds earned by the Contractor in the performance of the Contract are dedicated to satisfy obligations of the Contractor and Surety under this Bond, subject to the Owner's priority to use the funds for the completion of the work.

The Surety shall not be liable to the Owner, Claimants or others for obligation of the contractor that are unrelated to the Contract. The Owner shall not be liable for payment of any costs or expenses of any Claimant under this Bond, and shall have under this Bond no obligations to make payments to, give notices on behalf of, otherwise have obligations to Claimants under this Bond.

The Surety hereby waives notice of any change, including changes of time, to the Construction Contract or to related subcontracts, purchase orders and to other obligations.

When this Bond has been furnished to comply with a statutory or other legal requirement in the location where the construction was to be performed, any provision in this Bond conflicting with said statutory or legal requirement shall be deemed deleted herefrom and provisions conforming to such statutory or other legal requirements shall be deemed incorporated herein. The intent is that this Bond shall be construed as a statutory bond and not as a common law bond.

Upon request by any person or entity appearing to be a potential beneficiary of this Bond, the Contractor shall promptly furnish a copy of this Bond or shall permit a copy to be made.

Definitions: 1) Construction Contract; The agreement between the Owner and the Contractor identified on the signature page, including all contract Documents and changes thereto.

IN WITNESS THEREOF, the parties hereto have caused this bond to be executed this _____ day of _____, 20_____.

(Corporate Seal)

_____
Principal

Title: _____

_____
Street/City Address

(Corporate Seal)

_____
Surety

Title: _____

_____
Street/City Address

(Corporate Seal)

_____
Surety Witness:

Title: _____

_____
Street/City Address

City of Sweet Home, 1400 24th Ave, Sweet Home OR 97386 *(Owner)*

9th Avenue Waterline Replacement Project *(Project)*

None *(Bond Modifications)*

PERFORMANCE BOND

DATE. _____

BOND NO. _____

TOTAL BID AMOUNT: _____

KNOW ALL MEN BY THESE PRESENTS, that we

_____ *(Name of Contractor)*

as CONTRACTOR (Principal), and

_____ *(Name of Surety)*

a corporation, duly organized to do a general surety business in the State of Oregon as SURETY, jointly and severally, bind ourselves, our heirs, executors, administrators, successors, and assigns firmly in the sum of

_____ Dollars & Cents ($ _____), *(total contract price)*

to the Owner for the performance of the Construction Contract and any extension thereof, and during the twelve (12) month guaranty period which contract, extension and guaranty are incorporated herein by reference.

If the Contractor performs the Construction Contract, the Surety and the Contractor shall have no obligation under this Bond, except to participate in conferences as provided in the following paragraph.

If there is no Owner Default, the Surety's obligation under this Bond shall arise after: 1) The Owner has notified the Contractor and the Surety at its address described on the signature page herein, that the Owner is considering declaring the contractor Default and has requested and attempted to arrange a conference with the Contractor and the Surety to be held no later than fifteen (15) days after receipt of such notice to discuss methods of performing the Construction Contract. If the Owner, the Contractor and Surety agree, the Contractor shall be allowed a reasonable time to perform the Construction Contract, but such an agreement shall not waive the Owner's right, if any subsequently to declare a Contractor Default; and 2) The Owner has declared a Contractor Default and formally terminated the Contractor's right to complete the contract. Such Contractor Default shall not be declared earlier than twenty (20) days after the Contractor and the Surety have received notice as provided in the above paragraph; and 3) The Owner has agreed to pay the Balance of the Contract Price to the Surety in accordance with the terms of the Construction Contract or to a contractor selected to perform the construction contract in accordance with the terms of the contract with the Owner.

When the Owner has satisfied the conditions of the above paragraph, the Surety shall promptly and at the Surety's expense take one of the following actions: 1) Arrange for the Contractor with consent of the Owner, to perform and complete the Construction Contract; or 2) Undertake to perform and complete the Construction Contract itself, through its agents or through independent contractors, which agents or independent contractors shall be acceptable to the Owner; or obtain bids or negotiated proposals from qualified contractors acceptable to the Owner for a contract for performance and completion of the Construction Contract, arrange for a contract to be prepared for execution by the Owner and the contractor selected with the Owner's concurrence, to be secured with performance and payment bonds executed by a qualified surety equivalent to the bonds issued on the Construction Contract, and pay to the Owner the amount of damages as described in the following paragraph in excess of the Balance of the Contract Price incurred by the Owner resulting from the Contractor's default; or 4) Waive its right to perform and complete, arrange for completion, or obtain a new contractor and with reasonable promptness under the circumstances: 4a) After investigation, determine the amount for which it may be liable to the Owner and, as soon as practicable after the amount is determined, tender payment therefore to the Owner; or 4b)Deny liability in whole or in part and notify the Owner citing reasons therefore.

If the Surety does not proceed as provided in the above paragraph with reasonable promptness, the Surety shall be deemed to be in default on this Bond fifteen (15) days after receipt of an additional written notice from the Owner to the Surety demanding that the Surety perform its obligations under this Bond, and the Owner shall be entitled to

enforce any remedy available to the Owner. If the Surety proceeds as provided in the above paragraph, and the Owner refuses the payment tendered or the Surety has denied liability, in whole or in part, without further notice the Owner shall be entitled to enforce any remedy available to the Owner.

After the Owner has terminated the Contractor's right to complete the Construction Contract, and if the Surety elects to act under the second above paragraph, then the responsibilities of the Surety to the Owner shall not be greater than those of the Contractor under the Construction Contract, and the responsibilities of the Owner to the Surety shall not be greater than those of the Owner under the Construction Contract. To the limit of the amount of this Bond, but subject to commitment by the Owner of the Balance of the Contract Price to mitigation of costs and damages on the Construction Contract, the Surety is obligated without duplication for: 1) The responsibilities of the Contractor for correction of defective work and completion of the Construction Contract; 2) Additional legal, design professional and delay costs resulting from the Contractor's Default, and resulting from the actions or failure to act of the Surety under the second above paragraph; and 3) Liquidated damages, or if no liquidated damages are specified in the Construction Contract, actual damages caused by delayed performance or non-performance of the Contractor.

Any proceeding, legal or equitable, under this Bond may be instituted in any court of competent jurisdiction in the location in which the work or part of the work is located and shall be instituted with two (2) years after Contractor Default or within two (2) years after the Contractor ceased working or within two (2) years after the Surety refuses or fails to perform its obligations under this Bond, whichever occurs first. If the provisions of this Paragraph are void or prohibited by law, the minimum period of limitation available to sureties as a defense in the jurisdiction of the suit shall be applicable.

The Surety shall not be liable to the Owner or others for obligation of the Contractor that are unrelated to the Construction Contract, and the Balance of the Contract Price shall not be reduced or set off on account of any such unrelated obligations. No right of action shall accrue on this Bond to any person or entity other than the Owner or its heirs, executors, administrators or successors.

The Surety hereby waives notice of any change, including changes of time, to the Construction Contract or to related subcontracts, purchase orders and to other obligations.

Notice to the Surety, the Owner or the Contractor shall be mailed by certified or registered mail or delivered to the address shown on the signature page.

When this Bond has been furnished to comply with a statutory or other legal requirement in the location where the construction was to be performed, any provision in this Bond conflicting with said statutory or legal requirement shall be deemed deleted herefrom and provisions conforming to such statutory or other legal requirements shall be deemed incorporated herein. The intent is that this Bond shall be construed as a statutory bond and not as a common law bond.

Definitions: 1) Balance of the Contract Price; The total amount payable by the Owner to the Contractor under the Construction Contract after all proper adjustments have been made, including allowance to the Contractor of any amounts received or to be received by the Owner in settlement of insurance or other claims for damages to which the Contractor is entitled, reduced by all valid and proper payments made to or on behalf of the Contractor under the Construction Contract.

2) Construction Contract; The agreement between the Owner and the Contractor identified on the signature page, including all contract Documents and changes thereto.

3) Contractor Default; Failure of the contractor, which has neither been remedied nor waived, to perform or otherwise to comply with the terms of the Construction contract.

4) Owner Default; Failure of the Owner, which has neither been remedied nor waived, to pay the Contractor as required by the Construction contract or to perform and complete or comply with the other terms thereof.

IN WITNESS THEREOF, the parties hereto have caused this bond to be executed this _____ day of _____, 20_____.

(Corporate Seal)

_____
Principal

Title: _____

_____
Street/City Address

(Corporate Seal)

_____
Surety

Title: _____

_____
Street/City Address

(Corporate Seal)

_____
Surety Witness:

Title: _____

_____
Street/City Address

City of Sweet Home, 1400 24th Ave, Sweet Home OR 97386 *(Owner)*

9th Avenue Waterline Replacement Project *(Project)*

None *(Bond Modifications)*

FIRST-TIER SUBCONTRACTOR DISCLOSURE FORM

Project Name: **9th Avenue Waterline Replacement Project**

Bid Closing Date & Time: Wednesday, June 08, 2022, 2:00 PM.

Bid Open Time: Wednesday, June 08, 2022, 2:00 PM.

Disclosure Due Date & Time: Wednesday, June 08, 2022, 4:00 PM.

Bid total greater than $100,000? _____ (Yes / No, if No, subcontractor information is not required).

If the bidder will not be using any subcontractors that are subject to the above disclosure requirements, the Bidder is required to indicate "NONE" on this form.

Bidders are required to disclose information about certain first-tier subcontractors when the contract value for a Public Improvement is greater than $100,000, see ORS 279C.370. Specifically, when the contract amount of a first-tier subcontractor furnishing labor or labor and materials would be greater than or equal to: (i) 5% of the project Bid, but at least $15,000 whichever is greater; or (ii) $350,000 regardless of the percentage of the total project bid, the Bidder must disclose the following information about that subcontractor either in its Bid submission, or within two hours after Bid Closing:

- The name of each subcontractor, and
- The category of work to be performed, and
- The dollar value of the subcontract.

Compliance with the disclosure and submittal requirements outlined herein and in ORS 279C.370 and its amendments is a matter of Responsiveness. Bids that are submitted by the Bid Closing Time, but for which the disclosure submittal has not been made by the specified deadline, are not Responsive and shall not be considered for Contract award.

Subcontractor's Name	Category of Work	Dollar Value of Subcontract

Use additional sheets of this page if necessary.

Submitted by: _____ (Bidder & Contact Name), _____ (Phone #).

BID FORM

	ITEM DESCRIPTION WITH BID UNIT PRICE	UNIT	APPROX. QTY	UNIT PRICE	TOTAL AMOUNT
1	Mobilization, Cleanup, Traffic & Erosion Control	LS	1		
Bid Schedule A. 9th Avenue, Grape Street, Catalpa Street					
2	4" AWWA C900 PVC	LF	640		
3	4" Fittings, Valves, and Appurtenances	LS	1		
4	6" Fittings, Valves, and Appurtenances	LS	1		
5	8" AWWA C900 PVC	LF	1460		
6	8" Fittings, Valves, and Appurtenances	LS	1		
7	1" AWWA C904 PEX Meter Service - Short Side	EA	22		
8	1" AWWA C904 PEX Meter Service - Long Side	EA	27		
9	Fire Hydrant Assembly (inc. Tee to hydrant)	EA	2		
10	Connect to Existing	EA	4		
11	Manhole Raise	EA	13		
12	Valve Can Raise	EA	4		
13	ADA Ramp Replace	EA	6		
14	Sidewalk and Curb Replacement	LF	160		
15	Trench - Level 2, 1/2" ACP Mixture	TON	410		
16	Overlay - Level 2, 1/2" ACP Mixture	TON	855		
17	Driveways - Level 2, 1/2" ACP Mixture	TON	15		
18	Pavement Markings	LS	1		
				Sch A Subtotal	
Bid Schedule B. 8th Avenue, Birch Street, Alder Street					
19	6" AWWA C900 PVC	LF	380		
20	6" Fittings, Valves, and Appurtenances	LS	1		
21	8" AWWA C900 PVC	LF	1285		
22	8" Fittings, Valves, and Appurtenances	LS	1		
23	10" AWWA C900 PVC	LF	15		
24	10" Fitting, Valves, and Appurtenances	LS	1		
25	1" AWWA C904 PEX Meter Service - Short Side	EA	7		
26	1" AWWA C904 PEX Meter Service - Long Side	EA	13		
27	Connect to Existing	EA	4		
28	Manhole Raise	EA	3		
29	Valve Can Raise	EA	2		
30	Catchbasin Installation	LS	1		
31	ADA Ramp Replace	EA	3		
32	Sidewalk and Curb Replacement	LF	40		
33	Trench - Level 2, 1/2" ACP Mixture	TON	235		
34	Overlay - Level 2, 1/2" ACP Mixture	TON	325		
35	Driveways - Level 2, 1/2" ACP Mixture	TON	20		
36	Birch Street Grind	LS	1		
				Sch B Subtotal	
Bid Schedule B. 8th Avenue Alder Street Paving Overlay Additive Alternate					
37	Overlay - Level 2, 1/2" ACP Mixture	TON	225		
38	Driveways - Level 2, 1/2" ACP Mixture	TON	20		
39	Pavement Markings	LS	1		
40	Manhole Raise	EA	2		
41	Valve Can Raise	EA	3		
	Sch B Additive Alternate Subtotal				
				Total Bid	

PREVAILING WAGE for PUBLIC WORKS CONTRACTS
OREGON BOLI SPECIFICATIONS

All the provisions required by ORS 279C.800 through ORS 279C.870 relating to the payment of prevailing wage rates for work performed under the Contract with the City of Sweet Home shall be complied with.

Each worker in each trade or occupation employed in the performance of this contract either by the contractor, subcontractor, or other person doing or contracting to do, or contracting for the whole or any part of the work on this contract, must be paid not less than the applicable state prevailing rate of wage in accordance with ORS 279C.838 and 279C.840.

Each year the Oregon Bureau of Labor and Industries (BOLI) publishes two rates publications (and amendments to both) that are available by calling 971-673-0839 or online at the BOLI website at:
https://www.oregon.gov/boli/employers/Pages/prevailing-wage-rates.aspx

Prevailing wage rates that apply to this contract are the January 1, 2022, Prevailing Wage Rates for Public Works Contracts as amended by April 1, 2022 Prevailing Wage Rate Amendments in Oregon and the January 1, 2022, PWR Apprenticeship Rates.

Oregon law requires that the higher of the state prevailing wage rates (PWR) or federal Davis-Bacon rates be paid to workers on projects subject to both the state PWR law and federal Davis-Bacon Act. 9th Avenue Waterline Replacement Project does not require Davis-Bacon rates. Only Oregon BOLI Prevailing Wage Rates apply to this project.

If the contractor fails to pay for any labor or services, the City can pay for this labor or services and withhold these amounts from payments due the contractor. ORS 279C.520; OAR 839-025-0020(2)(b).

The contractor shall pay daily, weekly, weekend and holiday overtime as required in ORS 279C.540.

The contractor shall give written notice to the workers of the number of hours per day and days per week they may be required to work. ORS 279C.520(2); OAR 839-025-0020(2)(c)

Contractors and subcontractors are required to prepare weekly certified payroll reports and statements and submit them to the City by the fifth business day of each month (ORS 279C.845; OAR 839-025-0010). Contractor payment will be withheld until the City is in receipt of these certified weekly payroll reports. Information submitted on certified statements may be used only to ensure compliance with the provisions of ORS 279C.800 through ORS 279C.870.

Contractors and subcontractors which are on BOLI's List of PWR Contractors Ineligible to Receive Public Works Contracts, as well as any firm, corporation, partnership or association in which the contractor or subcontractor has a financial interest, are ineligible to receive public works contracts until removed from the list. The current version of the list is available on the BOLI website at:
https://www.oregon.gov/boli/employers/Pages/pwr-ineligible-contractors.aspx

PAYMENT OF MEDICAL CARE AND PROVIDING WORKERS' COMPENSATION

Oregon BOLI Law ORS 279C.530

The contractor shall make prompt payment for all medical services for which the contractor has agreed to pay, and for all amounts for which the contractor collects or deducts from the worker's wages. ORS 279C.530; OAR 839-025-0020(2)(d)

All subject employers working under this Contract shall comply with ORS 656.017 and provide the required Workers' Compensation coverage, unless such employers are exempt under ORS 656.126. Contractor shall ensure that each of its subcontractors complies with these requirements.

PUBLIC WORKS BOND

Oregon Public Contracting Law

In addition to the required payment bond and performance bond, unless exempt under ORS 279C.836 (7), (8), or (9), the contractor and every subcontractor is required to file a $30,000 Public Works Bond with the Construction Contractor's Board before starting work on the project, to be used exclusively for unpaid wages determined to be due by BOLI.

The contractor shall include in every subcontract a provision requiring the subcontractor to have said Public Works Bond filed with the Construction Contractor's Board before starting work on the project, unless the subcontractor is exempt. The contractor is required to verify that subcontractors, unless exempt, have filed a public works bond before permitting a subcontractor to start work on a project.

The Statutory Public Works Bond form is available from BOLI upon request or may be downloaded from https://www.oregon.gov/boli/employers/Documents/public-works-bond.pdf.

RECIPROCAL PREFERENCE LAW

Oregon's Reciprocal Preference Law

Oregon's reciprocal preference law, ORS 279A.120, requires public contracting agencies, in determining the lowest responsible bidder, to add a percent increase to each out-of-state bidder's bid price which is equal to the percent of preference given to local bidders in the bidder's home state. For example, if the low bidder is from a state that grants a 10 percent preference to its own in-state bidders, the Oregon agency must add 10 percent to that bidder's price when evaluating the bid.

OAR 125-246-0310: Reciprocal Preferences.

(1) When evaluating offers according to OAR 125-247-0255 through 125-247-0260, 125-249-0390 or 125-249-0640 through 125-249-0660, Authorized Agencies must add a percentage increase to the Offer of a Nonresident Offeror equal to the percentage, if any, of the preference that would be given to that Offeror in the state in which the Offeror resides. An Authorized Agency may rely on the list maintained by the Department according to ORS 279A.120(4) to determine:
   (a) Whether the Nonresident Offeror's state gives preference to in-state Offerors; and if so,
   (b) The amount of such preference (Percentage).
(2) Authorized Agencies must add a percentage to the Offer that matches the Percentage described in Section (1) before determining Tie-Offers in accordance with OAR 125-246-0300.

The National Association of Procurement Officials (NASPO) has gathered information on preference laws of all states. See https://www.naspo.org/research-innovation/state/OR for more details. This list is for your use in making contract awards under Oregon's reciprocal preference law. If you are in need of any assistance in the application of this law, please call or contact the State Procurement Office:

State of Oregon
Department of Administrative Services
State Procurement Office
1225 Ferry Street SE, U-140,
Salem, OR 97301-4285.
Tel: 503-378-4642.

See Attached.

SPECIAL PROVISIONS I

GENERAL REQUIREMENTS AND INFORMATION

The Oregon Standard Specifications for Construction (as revised), American Public Works Association (APWA) and American Water Works Association (AWWA) Standard Specifications, and ADA Accessibility Guidelines for Buildings and Facilities (ADAAG), etc. as applicable, are the Construction Specifications for this project. Other sections of the Oregon Standard Specifications may also apply and their omission as a direct reference herein does not relieve the Contractor from those standards. The cost of other items not specifically called for in the bid will be considered incidental to the Project and no additional payments will be made.

The General Requirements and Information references, as provided in the Special Provisions I are general in nature, those descriptions and references in the Technical Specification portion of the Special Provision II section are related more specifically to the particulars of the Project.

NOTE: All codes, standards, workmanship, material testing, general items, products, execution, special provisions, measurement and payments etc., are well documented in the Specifications noted above, and are NOT repeated here, but are included herein in whole or in part as reference and shall be applicable.

DESCRIPTION NARRATIVE OF WORK

The Work consists of improvements to the water system and pavement overlay in two areas of the City. Schedule A will be improvements along 9th Avenue between Oak Terrace and Cedar Street, including Grape and Catalpa Streets. Schedule B will be work along 8th Avenue between Cedar Street and Alder Street, Birch Street between 7th and 8th Avenue, and Alder Street between 9th Avenue and Elkhorn Street.

Schedule A is the construction of 8" PVC waterline on 9th Avenue, 4" PVC waterline on Grape Street, 4" PVC waterline on Catalpa Street, replacing existing 2" and smaller waterline in the area. All PVC waterline shall be C900 pipe. Improvements will tie into the existing water grid at the north end of 9th Avenue, the intersection of 9th Avenue and Elm Street, the intersection of 9th Avenue and Dogwood Street and at the intersection of 9th Avenue and Cedar Street. Water service laterals for 49 residences will be replaced as part of the work. Water service meter vaults will be replaced as part of the work, the meters will be replaced separately by the City. Two fire hydrant assemblies will be installed as part of the project, one at the intersection of 9th Avenue and Grape Street and one at the intersection of 9th Avenue and Catalpa Street. The fire hydrant assembly will include all ductile iron pipe, valves, fittings, and hydrants required. The existing road surface will then have a nominal 2" asphalt overlay. Due to the existing road surface construction, Grape Street will require a 4" asphalt overlay. Existing manholes and valve cans will be raised to match the new asphalt surface. Curb and sidewalk that is removed as part of the work will be replaced, and several sidewalk ramps will be replaced with ADA compliant ramps.

Schedule B is the construction of 8" PVC waterline on 8th Avenue between Cedar Street and Alder Street, 6" PVC waterline on Birch Street between 7th Avenue and 8th Avenue, and 8" PVC waterline on Alder Street between 9th Avenue and Elkhorn Street. All PVC waterline shall be C900 pipe. Improvements will tie into the existing improvements at Cedar Street and 8th Avenue, 7th Avenue and Birch Street, Alder Street and Elkhorn Street, and Alder and 8th Street. Water service laterals for 20 residences will be replaced as part of the work. Water service meter vaults will be replaced, the water meters have been previously replaced by the City. A catch basin will be installed on the east side of 8th Avenue and will connect to the existing ditch along the west side of 8th Avenue. The existing road surface will then have a 2" asphalt overlay. Existing manholes and valve cans will be raised to match the new asphalt surface. Curb and sidewalk that is removed as a part of the project will be replaced, and several sidewalk ramps will be replaced with ADA compliant ramps.

Schedule B includes the additive alternate of paving the section of 8th Avenue and Alder Street that is outside of the current City limits.

TIME AND PLACE OF RECEIVING BIDS

Sealed bids will be received at the City of Sweet Home Public Works Department at 1400 24th Ave , Sweet Home, Oregon, at which time as noted in the bid documents, the sealed bids will be publicly opened and read. Bids submitted after the specified time will not be received or opened.

The City of Sweet Home reserves the right to accept the bids and award a contract to the lowest responsible bidder; to postpone the acceptance of the Bid and the award of the contract for a period not to exceed thirty (30) calendar day; or to reject any and all bids received and further advertise the project for bids. The City of Sweet Home may reject any bid not in compliance with all prescribed public bidding procedures and requirements, and may reject for good cause any or all bids upon a finding of the City that it is in the public interest to do so.

The City of Sweet Home reserves the right to accept all, or any component in part, any Bid Schedule (e.g. A, B,…) grouped bid items, or individual bid items as noted in the specifications.

CONSTRUCTION SCHEDULE

The work, as described in these Plans and Specifications, is to begin no earlier than that approved by City Council and noted in the Notice to Proceed. Following the Award of Contract, and prior to issuance of the Notice to Proceed, a Pre-Construction meeting will be held, at which the Contractor shall submit a written Work Schedule, Traffic Control Schedule, Erosion Control Plan, or other documents to the Engineer. The Work Schedule shall specify the project work days to be utilized within the allowable completion time. Failure to complete the work within the completion time prescribed shall be considered cause for assessing liquidated damages, as set forth in Paragraph "LIQUIDATED DAMAGES" of these Special Provisions.

The construction schedule, as approved by the Engineer, will be an integral part of the Contract and will establish interim contract completion dates for the various activities. "Day" used throughout the Contract, unless otherwise stated, means "calendar day". Should any activity not be completed within five (5) days after the stated scheduled date, the Engineer shall have the right to order the Contractor to expedite completion of the activity by whatever means the Engineer deems appropriate and necessary without additional compensation to the Contractor.

It is expressly understood, and agreed, that failure by the Engineer to exercise the option to either order the Contractor to expedite an activity, or to expedite the activity by other means, shall not be considered precedent setting for any other activities.

TYPE OF BID

The Bid for the work is to be submitted on a unit price basis as called for in the Bid. The estimate of quantities of work to be done as tabulated in the Bid, and although stated with as much accuracy as possible, is approximate only, and is assumed solely for the convenience of the Contractor while assembling the Bid.

BASIS OF AWARD

Award, if made, will be to a lowest responsible bidder (as defined by O.R.S.) for any combination of schedules as stated above which is determined by the City to be in the City's best interest to award.

PERMITS

The contractor shall be responsible for acquiring any permits necessary for the completion of the work, i.e. fill & grade, water & wastewater plumbing, stormwater, or building construction on private property.

INCIDENTAL ITEMS

It is the intent of these documents that the bid items listed in the Bid shall provide full and complete payment for this project, as described in the Plan and Specifications. Payment for any incidental items, whether noted on the Plans and Specifications or not, which are necessary for the completion of the project as designed, but not listed explicitly as or with a bid item, shall be considered to have been included with the Bid.

PREQUALIFICATION

Prequalification is not required for this project.

When they occur if stated in the Instructions to Bidders, prequalification statements on standard ODOT or AGC Form 40 forms must be received by the City of Sweet Home on the date stated. Prequalification shall state the bidder's experience in handling work of this type and magnitude, availability of equipment and supervisory

personnel, giving references on previous similar projects, etc. Bids that are submitted by Contractors that have not prequalified will be considered non-responsive, and the bid will not be opened. Faxed Prequalification statements will not be accepted.

UTILITIES

The utilities shown on the Plans are located to the best degree possible from the information available, but are not guaranteed to be either accurate or complete. The existence of existing utility conflicts, not indicated on the Plans, shall not be the basis of extra work claims except that the cost of extra materials actually required to perform the work, and incorporated into the work, may be submitted for reimbursement in accordance with the General Conditions. The decision of the Engineer, as to the validity of such claims, shall be final. IN ACCORDANCE WITH ORS 757.542 TO 757.562 inclusive, it shall be the responsibility of the Contractor to notify all utility companies and organizations of his intention to begin construction. The Contractor alone shall be responsible for protecting all utilities and replacing utilities damaged by the Contractor during construction.

LIMITATION / SUBMISSION REQUIREMENTS

The City of Sweet Home reserves the right to:

- Accept or reject any or all bids received as a result of the RFB,
- Negotiate with qualified Bidders, as allowed by law.
- Cancel any RFB, in part or in whole, if it is determined to be in the best interest of the City to do so,
- Award to the selected firm or contractor any subsequent engineering design and construction services contract, part or in whole, for recommended capital projects,
- The RFB does not commit the City of Sweet Home to pay any costs incurred to prepare a bid.

SAFETY REQUIREMENTS

The Contractor shall have the sole responsibility for complying with the requirements of the Oregon Occupational Safety and Health Code, particularly Division 3, OAR 437-003, "Construction". Failure of the Contractor to comply with specific requirements shall be the Contractor's liability. No liability for safety violations will be assumed by the Engineer, City, or other involved parties. The Contractor shall comply with all Federal, State, County and City regulations.

PROTECTION OF FACILITIES

The Contractor shall make provisions for protection of all work during the period of construction, and shall repair or replace any facilities damaged by flood, fire, vandalism, neglect, or other means prior to acceptance of the completed facility by the Owner.

INSPECTION/ENGINEER

The term Inspector, Engineer, or the authorized representative of the Owner, for the purposes of approving materials and workmanship, shall be the City of Sweet Home.

SPECIFICATIONS

The Contractor shall perform all work in conformance with the construction drawings, special provisions and in compliance with the Oregon Standard Specifications for Construction (as revised) as if said specifications were bound herewith, or as they may be modified by the Special Provisions herein.

PROJECT WARRANTY

In addition to other specific warranties required by these Specifications, all work, including material and workmanship supplied by the Contractor shall be warranted to be free of defect for one (1) year from the date the written Final Acceptance by the City of Sweet Home. The Contractor also agrees to hold the City harmless from claims of any kind arising from damage due to said defects. The Contractor shall make all repairs, and replacements promptly upon receipt of written orders for same from the Owner. If the Contractor fails to make the repairs and

replacements promptly, the Owner may do the Work, and the Contractor and his surety shall be liable for the cost thereof.

TEMPORARY PROTECTION AND DIRECTION OF TRAFFIC

This shall include all temporary protection and direction of traffic per Oregon Standard Specifications for Construction, ODOT specifications, and as shown on the drawings or as stated herein. Traffic Control shall be per current edition of the Manual on Uniform Traffic Control Devices (MUTCD).

Traffic control devices which are expected to be in place for the duration of the project may be shown on the drawings. The Contractor shall provide such other traffic control devices as may be required at locations where construction is of short duration (i.e., street intersections and access to private property).

Adequate warning protection will be required for pedestrians, residents, and any material stored in a staging area in the right-of-way, or roadway. Night time protection with lighted barricades may be required. Emergency vehicles must have access or have access provided when needed.

A traffic control plan shall be submitted to the Engineer for review and approval. Following approval, the plan SHALL BE ADHERED TO AT ALL TIMES. The Contractor may find it necessary to consider various traffic control options for different stages of construction. Limited street closure to through traffic will not be allowed on this project. The Contractor must submit and receive approval from the Engineer **prior** to any modifications to the approved plan. If, in the opinion of the Engineer, the Contractor fails to comply with the drawings or the approved traffic control plan, or fails to protect the public safety, in addition to other penalties as described in the Standard Construction Specification, payment for this item shall be reduced at the discretion of the Engineer

The Contractor shall furnish the Engineer with the name and phone number of a responsible person with authority to ensure that the provisions of the plan are complied with, particularly with regard to 24 hour availability to provide a one (1) hour response to problems. The Contractor shall, at all times, protect access to private property.

Access for all residents must be maintained at all times, provide 48 hour written notice to the residents when specific driveways may be out of use. Maintaining access at all times to adjoining properties shall be incidental to the Contract and no extra payment shall be made for work relating to maintaining access, including temporary rock or asphalt necessary for the convenience and safety of the public.

EROSION CONTROL

As required per DSL, COE, DEQ, and any other National permits. All construction activities shall conform to City NPDES permit and Stormwater Control Best Management Practices.

Erosion control measures shall protect excessive sediment runoff into catchbasins or ditch channels located at or near the work areas. Material deposits in excess must be removed by the contractor. The City of Sweet Home will not provide removal. This will include control of runoff from any areas used for staging when or if the staging area is in a portion of the street right-of-way.

FINAL CLEANUP

Final cleanup of all work sites or staging areas shall remove construction materials, equipment, debris, and dirt or gravel from all surfaces, as well as from catch basins and storm drains, that may have been impacted by construction activities. This may also include periodic street sweeping regularly since there are local residents within the work zone.

LIQUIDATED DAMAGES

Liquidated damages shall be assessed as described in Section 00180.85 of the Oregon Standard Specifications for Construction. Liquidated damages shall apply against the Contractor and accrue to the Owner at the rate of Two Hundred Dollars ($200) per day per Schedule for each and every day that the project remains uncompleted beyond the time period outlined in the Construction Schedule.

BONDING REQUIREMENTS

A performance bond and payment bond in the amount of 100% of the contract price shall be furnished to the City of Sweet Home upon executing the contract.

A warranty bond for one year is required from the date of the acceptance by the City. The City of Sweet Home shall be named on the bond as the project Owner.

QUALITY CONTROL TESTING

The Owner reserves the right to perform any testing as may be required to determine compliance with the specifications. Costs for such testing shall be the Owner's responsibility unless testing indicates noncompliance. Costs for such testing indicating noncompliance shall be borne by the Contractor. Noncomplying Work shall be corrected and testing will be repeated until the Work complies with the specifications. Contractor shall pay any costs for retesting non-complying Work.

The Contractor shall cooperate in every respect with the activities of the testing agency.

PROPERTY PIN AND SURVEY/GPS MONUMENT PROTECTION

All property pins adjacent to and within the work area shall be protected from disturbance. If property corners are disturbed during the course of the work, and are not specifically referenced in the Bid Tabulations as requiring setting or resetting, they shall be replaced by a licensed surveyor at the Contractor's expense.

The care and protection, and replacement of damaged or dislodged property monumentation shall also apply to all City and Linn County Survey Markers, GPS Monuments, DLC Corner Monuments, and other position control points.

PRE-BID MEETING

A mandatory pre-bid meeting will be held at **2:00 PM** local time on **Wednesday May 25, 2022.** The meeting location is **1400 24th Ave, Sweet Home, OR 97386.** The meeting will begin in the office and then proceed to the project site(s).

PRE-CONSTRUCTION MEETING

A Pre-Construction meeting will be required on this project after the bidder award. When it occurs as noted in the Instructions to Bidders, the meeting will be located at City Hall, and scheduled to take place anytime within ten (10) working days following the Notice of Award. Weather and or other construction scheduling issues may modify this time frame. The Construction Contract and the Notice to Proceed will generally be issued at the meeting.

RETAINAGE

To ensure the proper performance of the Contract, the Owner shall retain five (5%) of the amount of each progress payment until final completion and acceptance of all work covered by this contract.

WAGES AND SALARIES

Attention of Contractors is particularly called to the requirements concerning wages to be paid to certain categories and classifications of employees.

DISPOSAL OF EXCESS MATERIAL

All excess trench excavation, existing sidewalk or curb, and other materials designated to be removed under the contract shall be disposed of off site at the Contractor's expense and in a legal manner. Fill permits, stating Contractor provided quantity, transportation carrier, and fill destination, if within the City Limits, shall be acquired by the City as needed.

PAYMENT

The contractor shall accept the compensation as full payment for furnishing all materials, labor, tools, and equipment necessary to complete the work. Compensation shall include loss or damage arising from the nature of the work or action of the elements, or any unforeseen difficulties, which may be encountered during the prosecution of the work.

The quantities listed in the bid schedule do not govern final payment. Payments to the contractor will be made only for the actual quantities of the work performed and for the quantities of work performed as extra work or under supplemental agreement. When items of work are not listed in the bid schedule, the work shall be considered incidental and no separate payment shall be paid.

If the contract cost is determined wholly or in part, on a lump-sum basis, Engineer may use unit prices bid by Contractor in making progress estimates on the work. In case said unit prices do not, in the opinion of the Engineer, truly represent actual relative costs of different parts of work, a percentage of the unit price may be used in making progress estimates.

END OF GENERAL REQUIREMENTS AND INFORMATION

The Oregon Standard Specifications for Construction (as revised), American Public Works Association (APWA) and American Water Works Association (AWWA) Standard Specifications, and ADA Accessibility Guidelines for Buildings and Facilities (ADAAG), etc. as applicable, are the Construction Specifications for this project. Other sections of the Oregon Standard Specifications may also apply and their omission as a direct reference herein does not relieve the Contractor from those standards. The cost of other items not specifically called for in the bid will be considered incidental to the Project and no additional payments will be made.

The General Requirements and Information references, as provided in the Special Provisions I are general in nature, those descriptions and references in the Technical Specification portion of the Special Provision II section are related more specifically to the particulars of the Project. The cost of other items not specifically called for in the Bidder's Bid will be considered incidental to the Project and no additional payments will be made.

NOTE: All codes, standards, workmanship, material type, material testing, general items, products, execution, special provisions, measurement and payments etc. related to the items noted below, are well documented in the Standard Specifications 00100 through 03010 and are NOT repeated here, but are included herein by reference.

All bid items include excavation, earthwork, and aggregate base and finish concrete work. All concrete shall be class 3600psi per Oregon Standard Specifications except as noted for Porous Concrete. All concrete segments shall be minimum of 4" in thickness, with exception of driveway and sidewalk apron areas which shall be 6" or 8" in thickness. Use compacted ¾"- or 1"- base fill under all sidewalk portions. Fill back edges of concrete walks smooth with native material to grade of adjacent yards.

Notification to immediately adjacent corner residents shall be made in writing by the contractor 48 hours in advance of the work. Notification shall state Project Name, Contractor Company Name, contact and phone, City Contact and Phone, the date of the work scheduled and a request to keep parked vehicles out of the corner area. Adequate warning protection will be required for pedestrians, residents, and any material stored in a staging area in the right-of-way, or roadway. Access for all residents must be maintained at all times, provide 48 hour written notice to the residents when specific driveways may be impacted.

All named material brands shall be "or equal." Requests for alternate or substitution shall be submitted to City for review and approval prior to ordering materials.

Following this section is a map(s) showing the project work site location in Sweet Home.

Bid Items.

BID ITEM NO. 1 – Mobilization, Cleanup, Staking, Traffic & Erosion Control.
This item shall include all mobilization and final cleanup within the project area. This will also include periodic street sweeping and to provide final cleanup of all work sites or staging areas to remove construction materials, equipment, debris, and dirt or gravel from all surfaces, as well as from catch basins and storm drains, that may have been impacted by construction activities, since there are local residents within the work zone. This includes any staging area required.

This item shall include all Work Zone Traffic Control required by the City of Sweet Home, OHSA MUTCD, and Oregon Department of Transportation Standards. This bid item shall be considered full pay for all labor, materials, and equipment required to plan for, coordinate, sign, flag, detour, or direct traffic impacted by this project in accordance with Section 00225 of the ODOT Standard Specifications. A general traffic control plan shall be submitted – and approved – to the City prior to the beginning of work.

Adequate warning protection will be required for any material stored in a staging area in the right-of-way, or along the longitudinal cut drop off running lengthwise on the roadway. Night time protection of stored materials with lighted barricades may be required. This will include control of runoff from any areas used for staging when or if the staging area is a portion of the street right-of-way. Material deposits in excess must be removed by the contractor. The City of Sweet Home will not provide removal.

Access for all residents must be maintained at all times, provide written notice to the resident when specific driveways may be out of use. Emergency vehicles must have access or have access provided when needed.

This item shall include erosion control measures to protect runoff into catchbasins or drainage ditches located on the local streets where the work will be performed. Bio-Filter bags or other forms of sediment barriers may be used.

BID ITEM NO. 2 – 4" AWWA C900 PVC.

This per linear foot bid item includes all labor, materials, and equipment to install 4" AWWA C900 PVC pipe and waterline per AWWA and Oregon Specifications for Construction. This item shall include all warning wire and tape.

This bid item shall include all testing procedures for pipeline pressure and disinfection per AWWA standards.

This bid item shall include 12 gauge blue color tracer wire and warning tape on all plastic pipelines. Tracer wire material from Copperhead Ind. is detailed in Bid Item No. 4 and No. 5, for the meter services. Connection to service lines, adjacent tee configurations and existing tracer wires shall be with locking waterproof and corrosion proof wire connectors Copperhead Ind. Blue SnakeBite locking connectors LSC 1230B or 3WB-01. Tracer wire shall be secured to the PVC pipeline at 10 foot intervals per 01140.45, and be coiled into valve boxes with 12 inches available from the surface. Tracer wire shall be securely and firmly attached to any existing Ductile or Cast Iron piping, with similar connectors and stainless steel strapping as necessary. Place Underground Marking Tape 12 inches over the pipeline during the backfill, taking care not to damage the tape.

A continuity check on the tracer wire is required prior to final paving. Contractor shall contact city personnel within 48-hours after installation of the last meter service. City Maintenance shall perform a Locate Test on all main and services.

Care needs to be taken around existing water services, stormwater, and gas service lines. The depth of each service should be verified prior to major excavation, and repair options should be made available.

This bid item shall include all roadway sawcutting, excavation of roadway pavement, base material and along with existing curb, driveway apron and wings, and sidewalk sections Excavated material hauled offsite and deposited at another property location within the City of Sweet Home will need a Fill & Grade Permit from the City Building Program Office, located in City Hall at 3225 Main St, 541-367-7993, for information.

This bid item shall include all Class B Granular pipe zone and trench backfill consisting of compacted crushed rock of 1"-0" or ¾"-0" as approved. Compaction tests on the compacted backfill per standard spacing.

BID ITEM NO. 3 – 4" Fittings, Valves, and Appurtenances

This lump sum bid item includes all labor, materials, testing, and equipment required to install all nominal 4" fittings, valves, and appurtenances as shown on the plans and/or required for the completion of the project. All water pipe fittings, valves, and appurtenances, including all gaskets, shall be NSF 61 compliant. All fittings, valves, and appurtenances shall be of ductile iron construction, unless approved in writing by the City.

This bid item includes cast iron valve boxes with PVC extensions shall be furnished and installed with all buried valves, see standard detail drawing. Box and cover shall be H20 rated. Valves shall include a VC212 valve centering device.

Install all fittings, valves, and appurtenances per manufacturer instructions. Comply with AWWA C600.

This bid item includes all thrust blocks. Furnish and place thrust blocks, sized as shown on the Plans. Concrete shall conform to Oregon Standard Specifications Section 00440, Commercial Grade Concrete. Compressive field strength shall not be less than 3,000 psi at 28 days. Maximum aggregate size shall be 1½-inches. Slump shall be between 2 and 4 inches. Thrust blocking shall be placed between undisturbed earth and the waterline fitting to be anchored in such a manner that the fitting is accessible for repair and nuts and bolts are not encased. 6 mil thick plastic sheeting shall be placed between fittings and poured concrete. Thrust blocks shall be neatly formed with plywood. Contractor shall install as required to prevent lateral movement and uplift. Concrete shall cure for a minimum of five (5) days prior to hydrostatic testing.

BID ITEM NO. 19 – 6" AWWA C900 PVC.
This per linear foot bid item includes all labor, materials, and equipment to install 6" AWWA C900 PVC pipe and waterline per AWWA and Oregon Specifications for Construction. This item shall include all warning wire and tape.

This bid item shall include all testing procedures for pipeline pressure and disinfection per AWWA standards.

This bid item shall include 12 gauge blue color tracer wire and warning tape on all plastic pipelines. Tracer wire shall be from Copperhead Ind. Connection to service lines, adjacent tee configurations and existing tracer wires shall be with locking waterproof and corrosion proof wire connectors Copperhead Ind. Blue SnakeBite locking connectors LSC 1230B or 3WB-01. Tracer wire shall be secured to the PVC pipeline at 10 foot intervals per 01140.45 and be coiled into valve boxes with 12 inches available from the surface. Tracer wire shall be securely and firmly attached to any existing Ductile or Cast Iron piping, with similar connectors and stainless steel strapping as necessary. Place Underground Marking Tape 12 inches over the pipeline during the backfill, taking care not to damage the tape.

A continuity check on the tracer wire is required prior to final paving. Contractor shall contact city personnel within 48-hours after installation of the last meter service. City Maintenance shall perform a Locate Test on all main and services.

Care needs to be taken around existing water services, stormwater, and gas service lines. The depth of each service should be verified prior to major excavation, and repair options should be made available.

This bid item shall include all roadway sawcutting, excavation of roadway pavement, and base material Excavated material hauled offsite and deposited at another property location within the City of Sweet Home will need a Fill & Grade Permit from the City Building Program Office, located in City Hall at 3225 Main St, 541-367-7993, for information.

This bid item shall include all Class B Granular pipe zone and trench backfill consisting of compacted crushed rock of 1"-0" or ¾"-0" as approved. Compaction tests on the compacted backfill per standard spacing.

BID ITEM NO. 4, 20 – 6" Fittings, Valves, and Appurtenances
This lump sum bid item includes all labor, materials, testing, and equipment required to install all nominal 6" fittings, valves, and appurtenances as shown on the plans and/or required for the completion of the project. All water pipe fittings, valves, and appurtenances, including all gaskets, shall be NSF 61 compliant. All fittings, valves, and appurtenances shall be of ductile iron construction, unless approved in writing by the City.

This bid item includes cast iron valve boxes with PVC extensions shall be furnished and installed with all buried valves, see standard detail drawing. Box and cover shall be H20 rated. Valves shall include a VC212 valve centering device.

Install all fittings, valves, and appurtenances per manufacturer instructions. Comply with AWWA C600.

This bid item includes all thrust blocks. Furnish and place thrust blocks, sized as shown on the Plans. Concrete shall conform to Oregon Standard Specifications Section 00440, Commercial Grade Concrete. Compressive field strength shall not be less than 3,000 psi at 28 days. Maximum aggregate size shall be 1½-inches. Slump shall be between 2 and 4 inches. Thrust blocking shall be placed between undisturbed earth and the waterline fitting to be anchored in such a manner that the fitting is accessible for repair and nuts and bolts are not encased. 6 mil thick plastic sheeting shall be placed between fittings and poured concrete. Thrust blocks shall be neatly formed with plywood. Contractor shall install as required to prevent lateral movement and uplift. Concrete shall cure for a minimum of five (5) days prior to hydrostatic testing.

BID ITEM NO. 5, 21 – 8" AWWA C900, PVC Water.
This per linear foot bid item includes all labor, materials, and equipment to install 8" AWWA C900 PVC pipe and waterline per AWWA and Oregon Specifications for Construction. This item shall include all warning wire and tape.

This bid item shall include all testing procedures for pipeline pressure and disinfection per AWWA standards.

This bid item shall include 12 gauge blue color tracer wire and warning tape on all plastic pipelines. Tracer wire shall be from Copperhead Ind. Connection to service lines, adjacent tee configurations and existing tracer wires shall be with locking waterproof and corrosion proof wire connectors Copperhead Ind. Blue SnakeBite locking connectors LSC 1230B or 3WB-01. Tracer wire shall be secured to the PVC pipeline at 10 foot intervals per 01140.45 and be coiled into valve boxes with 12 inches available from the surface. Tracer wire shall be securely and firmly attached to any existing Ductile or Cast Iron piping, with similar connectors and stainless steel strapping as necessary. Place Underground Marking Tape 12 inches over the pipeline during the backfill, taking care not to damage the tape.

A continuity check on the tracer wire is required prior to final paving. Contractor shall contact city personnel within 48-hours after installation of the last meter service. City Maintenance shall perform a Locate Test on all main and services.

Care needs to be taken around existing water services, stormwater, and gas service lines. The depth of each service should be verified prior to major excavation, and repair options should be made available.

This bid item shall include all roadway sawcutting, excavation of roadway pavement, and base material Excavated material hauled offsite and deposited at another property location within the City of Sweet Home will need a Fill & Grade Permit from the City Building Program Office, located in City Hall at 3225 Main St, 541-367-7993, for information.

This bid item shall include all Class B Granular pipe zone and trench backfill consisting of compacted crushed rock of 1”-0” or ¾”-0” as approved. Compaction tests on the compacted backfill per standard spacing.

BID ITEM NO. 6, 22 – 8” Fittings, Valves, and Appurtenances

This lump sum bid item includes all labor, materials, testing, and equipment required to install all nominal 8” fittings, valves, and appurtenances as shown on the plans and/or required for the completion of the project. All water pipe fittings, valves, and appurtenances, including all gaskets, shall be NSF 61 compliant. All fittings, valves, and appurtenances shall be of ductile iron construction, unless approved in writing by the City.

This bid item includes cast iron valve boxes with PVC extensions shall be furnished and installed with all buried valves, see standard detail drawing. Box and cover shall be H20 rated. Valves shall include a VC212 valve centering device.

Install all fittings, valves, and appurtenances per manufacturer instructions. Comply with AWWA C600.

This bid item includes all thrust blocks. Furnish and place thrust blocks, sized as shown on the Plans. Concrete shall conform to Oregon Standard Specifications Section 00440, Commercial Grade Concrete. Compressive field strength shall not be less than 3,000 psi at 28 days. Maximum aggregate size shall be 1½-inches. Slump shall be between 2 and 4 inches. Thrust blocking shall be placed between undisturbed earth and the waterline fitting to be anchored in such a manner that the fitting is accessible for repair and nuts and bolts are not encased. 6 mil thick plastic sheeting shall be placed between fittings and poured concrete. Thrust blocks shall be neatly formed with plywood. Contractor shall install as required to prevent lateral movement and uplift. Concrete shall cure for a minimum of five (5) days prior to hydrostatic testing.

BID ITEM NO. 23 – 10” AWWA C900, PVC Water.

This per linear foot bid item includes all labor, materials, and equipment to install 10” AWWA C900 PVC pipe and waterline per AWWA and Oregon Specifications for Construction. This item shall include all warning wire and tape.

This bid item shall include all testing procedures for pipeline pressure and disinfection per AWWA standards.

This bid item shall include 12 gauge blue color tracer wire and warning tape on all plastic pipelines. Tracer wire shall be from Copperhead Ind. Connection to service lines, adjacent tee configurations and existing tracer wires shall be with locking waterproof and corrosion proof wire connectors Copperhead Ind. Blue SnakeBite locking connectors LSC 1230B or 3WB-01. Tracer wire shall be secured to the PVC pipeline at 10 foot intervals per 01140.45 and be coiled into valve boxes with 12 inches available from the surface. Tracer wire shall be securely and firmly attached to any existing Ductile or Cast Iron piping, with similar connectors and stainless steel strapping

as necessary. Place Underground Marking Tape 12 inches over the pipeline during the backfill, taking care not to damage the tape.

A continuity check on the tracer wire is required prior to final paving. Contractor shall contact city personnel within 48-hours after installation of the last meter service. City Maintenance shall perform a Locate Test on all main and services.

Care needs to be taken around existing water services, stormwater, and gas service lines. The depth of each service should be verified prior to major excavation, and repair options should be made available.

This bid item shall include all roadway sawcutting, excavation of roadway pavement, and base material Excavated material hauled offsite and deposited at another property location within the City of Sweet Home will need a Fill & Grade Permit from the City Building Program Office, located in City Hall at 3225 Main St, 541-367-7993, for information.

This bid item shall include all Class B Granular pipe zone and trench backfill consisting of compacted crushed rock of 1”-0” or ¾”-0” as approved. Compaction tests on the compacted backfill per standard spacing.

BID ITEM NO. 7, 25 – 1” AWWA C904 PEX Meter Service – Short Side.
This per each bid item includes all labor, materials, and equipment to install meter service assemblies of 1” AWWA C904-06 Cross-linked Polyethylene (PEX) blue water service line, 12 awg tracer wire and warning tape, ball valve FB1100-4-Q-NL corporation stop, tapping saddle Romac 202NS or equal, locking wing 1”x3/4” Ford BA63-332W-Q-NL meter curb stop with meter swivel nut, Ford 3/4" L31-13-NL Angle Meter Coupling with meter swivel nut, all other required appurtenances, and DFW Meter Box with Lid, part numbers DFW486WBC4-12-BODY and DFW 486C-4M-NHK-LID. All fittings in contact with potable water shall be NSF 61 compliant.

PEX 1” service piping shall be SDR 9, CTS MuniciPEX (PEXa) by REHAU or equal. Installation shall have all compression joint fittings, with stainless steel insert-stiffeners Ford Insert 53-72-Q or equal, installed 24” depth below grade level, with a slight serpentine trench lay for expansion/contraction. Due to meter depth, lay pipe segments horizontally and vertically straight with a 1” Quarter Bend Ell using Mueller, Ford, McDonald or equal compression fittings transitioning to the meter curb stop, without curvature of the pipeline. If curvature anywhere is necessary, with City approval, use a recommended curvature radius of 30 pipe diameters (no less than 20 diameters (10 per manuf.)), and under no circumstances reversing the coil direction.

Tracer wire shall be Copperhead Ind. 12 awg SuperFlex Tracer Wire attached to the PEX service line with zip-ties, not duct tape, at 10 foot intervals, and be routed into the meter box with a minimum of 12” extended and coiled. Tracer wire connection junctions shall be Copperhead Ind. Blue SnakeBite locking connectors.

The meter box shall be a 11”x18”x12” DFW meter box, part number DFQ486WBC4-12-BODY. The box cover shall be DFW486C-4M-NHK-LID. The base support of the meter box shall be Class B crushed rock, and be a minimum thickness of 2” below the base of the water meter box.

This bid item shall also include the roadway sawcutting, excavation and backfill quantities for the trenching of the service line.

This item includes erosion control measures to protect excessive sediment runoff into catch basins or ditch channels located at or near the work areas.

This item shall include all incidental grass seed and finish top soil material used for minor backfilling and grading behind or adjacent to new sidewalk panels, back curbs, or ramp assemblies to match to existing adjacent surface grade.

BID ITEM NO. 8, 26 – 1” AWWA C904 PEX Meter Service – Long Side.
This per each bid item includes all labor, materials, and equipment to install meter service assemblies of 1” AWWA C904-06 Cross-linked Polyethylene (PEX) blue water service line, 12 awg tracer wire and warning tape, ball valve FB1100-4-Q-NL corporation stop, tapping saddle Romac 202NS or equal, locking wing 1”x3/4” Ford BA63-332W-Q-NL meter curb stop with meter swivel nut, Ford 3/4" L31-13-NL Angle Meter Coupling with meter swivel nut, all other required appurtenances, and DFW Meter Box with Lid, part numbers DFW486WBC4-12-BODY and DFW 486C-4M-NHK-LID. All fittings in contact with potable water shall be NSF 61 compliant.

PEX 1" service piping shall be SDR 9, CTS MuniciPEX (PEXa) by REHAU or equal. Installation shall have all compression joint fittings, with stainless steel insert-stiffeners Ford Insert 53-72-Q or equal, installed 24" depth below grade level, with a slight serpentine trench lay for expansion/contraction. Due to meter depth, lay pipe segments horizontally and vertically straight with a 1" Quarter Bend Ell using Mueller, Ford, McDonald or equal compression fittings transitioning to the meter curb stop, without curvature of the pipeline. If curvature anywhere is necessary, with City approval, use a recommended curvature radius of 30 pipe diameters (no less than 20 diameters (10 per manuf.)), and under no circumstances reversing the coil direction.

Tracer wire shall be Copperhead Ind. 12 awg SuperFlex Tracer Wire attached to the PEX service line with zip-ties, not duct tape, at 10 foot intervals, and be routed into the meter box with a minimum of 12" extended and coiled. Tracer wire connection junctions shall be Copperhead Ind. Blue SnakeBite locking connectors.

The meter box shall be a 11"x18"x12" DFW meter box, part number DFQ486WBC4-12-BODY. The box cover shall be DFW486C-4M-NHK-LID. The base support of the meter box shall be Class B crushed rock, and be a minimum thickness of 2" below the base of the water meter box.

This bid item shall also include the roadway sawcutting, excavation and backfill quantities for the trenching of the service line.

This item includes erosion control measures to protect excessive sediment runoff into catchbasins or ditch channels located at or near the work areas.

This item shall include all incidental grass seed and finish top soil material used for minor backfilling and grading behind or adjacent to new sidewalk panels, back curbs, or ramp assemblies to match to existing adjacent surface grade.

BID ITEM NO. 10, 27 – Connect to Existing

This per each bid item includes all labor, materials, testing, and equipment to connect improvements to the existing water system.

Excavation, backfill and paving quantities are not included in this bid item.

BID ITEM NO. 9 – Fire Hydrant Assembly.

This per each bid item includes all labor, materials, and equipment to install fire hydrants (Mueller Super Centurion 250 Model A423) per the project plans, including the water main hydrant tee, valves and boxes, hydrant leg, hydrant, main port Storz adapter, thrust restraints, blue reflective pavement marker, backfill, testing and painting, and any incidental items. The hydrant shall be painted a metallic silver for the barrel section, and the bonnet a color based on post construction flow tests per National Standard Color Codes.

This bid item includes all labor, materials, and equipment required to install AWWA C151 6" Class 52 Ductile Iron waterline to connect the fire hydrant assembly to the new watermain per standard AWWA and Oregon Specifications for Construction.

This bid item shall include all testing procedures for pipeline pressure and disinfection per AWWA standards.

Care needs to be taken around existing water services, stormwater and gas service lines. The depth of each service should be verified prior to major excavation, and repair options should be made available.

This bid item shall include all roadway sawcutting, excavation of roadway pavement, and base material. Excavated material hauled offsite and deposited at another property location within the City of Sweet Home will need a Fill & Grade Permit from the City Building Program Office, located in City Hall at 3225 Main St, 541-367-7993, for information.

This bid item shall include all Class B Granular pipe zone and trench backfill consisting of compacted crushed rock of 1"-0" or ¾"-0" as approved. Compaction tests on the compacted backfill per standard spacing.

BID ITEM NO. 11, 28, 40 – Manhole Rim Adjustment.
This per unit bid item shall include all manholes that fall within the overlay. Adjust all manhole rims to match new road surface elevation or as directed by City. Adjustments of nominal 2" or less shall use cast iron or steel risers. Adjustments of nominal 3" or greater shall use concrete risers. Work shall be conducted per OSSC Section 00490. Payment shall include, but not be limited to, all materials, labor, equipment, and permitting required to complete the Work. No separate measurement for these items shall occur.

BID ITEM NO. 12, 29, 41 – Valve Can Adjustment.
This per unit bid item shall include all valve cans that fall within the overlay. Adjustment all cans to match new road surface elevation or as directed by City. Work shall be conducted per OSSC Section 00490. Payment shall include, but not be limited to, all materials, labor, equipment, and permitting required to complete the Work. No separate measurement for these items shall occur. Blowoff assemblies shall be counted as two valve cans.

BID ITEM NO. 30 – Catchbasin Installation.
This lump sum item includes all materials, labor, and equipment required to install a catchbasin at the intersection 8th Avenue at the intersection of Birch Street as shown on the plans. Catchbasin shall be of precast construction and shall conform to all ODOT requirements as shown on standard detail RD378.

This line item shall include all materials, labor, and equipment required to also install a 12" PVC that shall connect the existing storm drainage system on the other side of the road. 12" PVC pipe installed shall include tracer wire Tracer wire shall be Copperhead Ind. 12 awg SuperFlex Tracer Wire attached to the PVC pipe with zip-ties, not duct tape, at 10 foot intervals, and be routed into the catchbasin with a minimum of 12" coiled and secured with a zip tie. Tracer wire connection junctions shall be Copperhead Ind. Blue SnakeBite locking connectors.

BID ITEM NO. 13, 31 – ADA Ramp Replace.
This per unit bid item shall include all materials and labor required to construct an American Disability Act (ADA) compliant pedestrian ramp. This item includes the demolition of the existing ramp and all form work required to construct the ramp. Ramp design, form work, and construction shall conform to all ADA and ODOT requirements. Non-compliant ramps will not be accepted and shall be replaced at the Contractors expense. Payment shall include, but not be limited to, all materials, labor, equipment, and permitting required to complete the Work. No separate measurement for these items shall occur.

BID ITEM NO. 14, 32 – Sidewalk and Curb Replacement.
This per linear foot bid item shall include the removal and replacement of all curb, gutter, and sidewalk as a part of this project. Dimensions shall match existing. Joints shall be formed by tooling into fresh concrete. The joint shall be perpendicular to the concrete surface and ¼ of the thickness of the slab. Zip strips not allowed. Joint pattern shall match removed concrete.

This bid item includes all sawcutting, excavation, and backfill required to complete the work. All defective or rejected work shall be replaced at the contractors expense.

Mix Design Requirements:
1. Cement: Portland Cement, Type I or II, ASTM C150
2. Water / Cementitious Materials Ratio: 0.45-0.50 by weight
3. Strength: 3500 psi minimum, ASTM C39
4. Air Content: 2.5-5% by volume, ASTM C231
5. Water Reducer: Mid or High-Range
6. Maximum slump at time of placement: 5-inches or less

Excavated material hauled offsite and deposited at another property location within the City of Sweet Home will need a Fill & Grade Permit from the City Building Program Office, located in City Hall at 3225 Main St, 541-367-7993, for information.

This item does not include any costs, materials, or labor associated with ADA Ramp Replacement.

BID ITEM NO. 15, 33 – Level 2, 1/2" ACP Mixture – Trench.
This per Ton bid item includes all labor, materials, and equipment required to install a 3" thick base course lift of Level 2 Asphalt Concrete Pavement per Oregon Standard Section 00744. It shall be used for all waterline trench areas. City and Contractor to verify locations.

Contractor must notify City 48 hours prior to placement of asphalt pavement for inspection. When, in the judgment of the City, the weather is such that satisfactory results cannot be achieved asphalt concrete paving operations shall be suspended. Owner shall not be liable for damages or claims of any kind or description due to the suspension of operations by the Engineer. HMAC shall not be placed when the ambient temperature is below 40º F, or surface is wet or frozen.

Adhere to all applicable State and/or OSHA regulations pertaining to road closure, traffic control, and other related safety precautions.

To provide for the convenience and safety of the traveling public, pavement replacement shall be performed immediately following the completion of backfilling operations. In the event that pavement replacement cannot be performed as such, the Contractor shall maintain the trench backfill on a daily basis, as directed, until pavement replacement has been completed.

BID ITEM NO. 16, 34, 37 – Level 2, 1/2" ACP Mixture – Overlay.
This per Ton bid item shall include the wearing course lift of 2" thick, Level 2 Asphalt Concrete Pavement per Oregon Standard Section 00744. It shall be used for all roadway areas, and work area shoulder excavations and infills. This bid item includes edge widening lifts and pre-level applications necessary for the primary overlay lift. City and Contractor to verify locations.

This bid item includes all sawcutting, excavation, road surface preparation, tack coat application, and road edge grinding as shown on plans or as directed by City. City and Contractor to verify locations.

Contractor must notify City 48 hours prior to placement of asphalt pavement for inspection. When, in the judgment of the City, the weather is such that satisfactory results cannot be achieved asphalt concrete paving operations shall be suspended. Owner shall not be liable for damages or claims of any kind or description due to the suspension of operations by the Engineer. HMAC shall not be placed when the ambient temperature is below 40º F, or surface is wet or frozen.

Adhere to all applicable City, County, State and Federal regulations pertaining to road closure, traffic control, and other related safety precautions.

BID ITEM NO. 17, 35, 38 – Level 2, 1/2" ACP Mixture – Driveway.
This per Ton bid item shall include the wearing course lift of 2" thick, Level 2 Asphalt Concrete Pavement, per Oregon Standard Section 00744. It shall be used for all driveway apron areas. Pave only to the property line or position noted by city staff. Existing driveways of asphalt or concrete that extend to the roadway do not need to be overlaid. This bid item includes any pre-level applications necessary for the primary overlay lift. City and Contractor to verify locations.

This bid item includes all sawcutting, excavation, road surface preparation, tack coat application, and road edge grinding as shown on plans or as directed by City. City and Contractor to verify locations.

Contractor must notify City 48 hours prior to placement of asphalt pavement for inspection. When, in the judgment of the City, the weather is such that satisfactory results cannot be achieved asphalt concrete paving operations shall be suspended. Owner shall not be liable for damages or claims of any kind or description due to the suspension of operations by the Engineer. HMAC shall not be placed when the ambient temperature is below 40º F, or surface is wet or frozen.

Adhere to all applicable City, County, State and Federal regulations pertaining to road closure, traffic control, and other related safety precautions.

BID ITEM NO. 18, 39 – Pavement Markings.
This lump sum bid item shall include the replacement and/or installation of all crosswalks, stop bars, and lane painting as shown on the plans. All pavement markings shall conform to all ODOT requirements.

Construction and material used shall be per Oregon Standard Section 00850, 00860 and 00867.

BID ITEM NO. 36 – Birch Street Grind.
This lump sum bid item shall include the curb to curb cold plane removal of 2" of asphalt on Birch Street. Contractor to coordinate precise limits with City. Cold plane removal shall be conducted in accordance with OSS Section 00620.

This bid item shall include all roadway sawcutting and removal of roadway pavement. Removed material hauled offsite and deposited at another property location within the City of Sweet Home will need a Fill & Grade Permit from the City Building Program Office, located in City Hall at 3225 Main St, 541-367-7993, for information.

END OF GENERAL TECHNICAL REQUIREMENTS

The City of Sweet Home is an Equal Opportunity/Affirmative Action Employer.
Women, Minorities and Disabled Persons are encouraged to apply.

This ITB is issued in accordance with the provisions of the laws including statutes, ordinances, resolutions, and rules, of the State of Oregon and the City of Sweet Home. Authorized & approved for posting by the City Council and the City Manager. Staff can amend the ITB and contract form to meet the best interests of the City with the approval of the City Manager.

THIS SOLICITATION IS NOT AN IMPLIED CONTRACT AND MAY BE MODIFIED OR REVOKED WITHOUT NOTICE.

CITY OF SWEET HOME
2022 WATERMAIN REPLACEMENT PROJECT
LINN COUNTY, OR

PROJECT NO. 2817-05
APRIL 2022

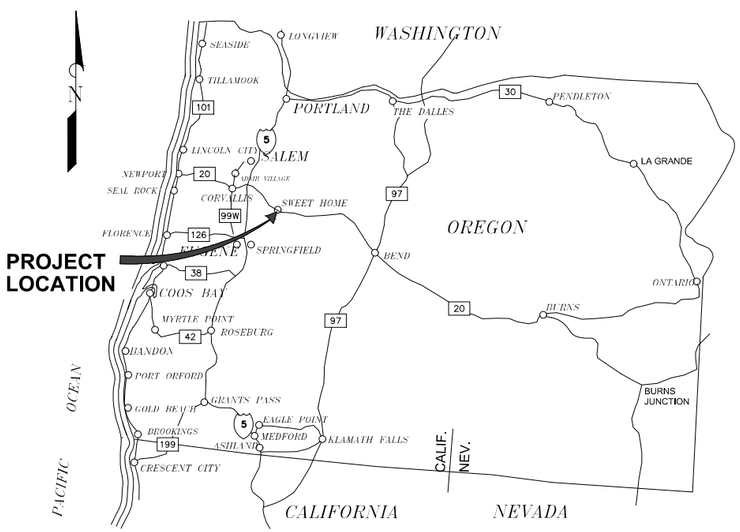

LOCATION MAP

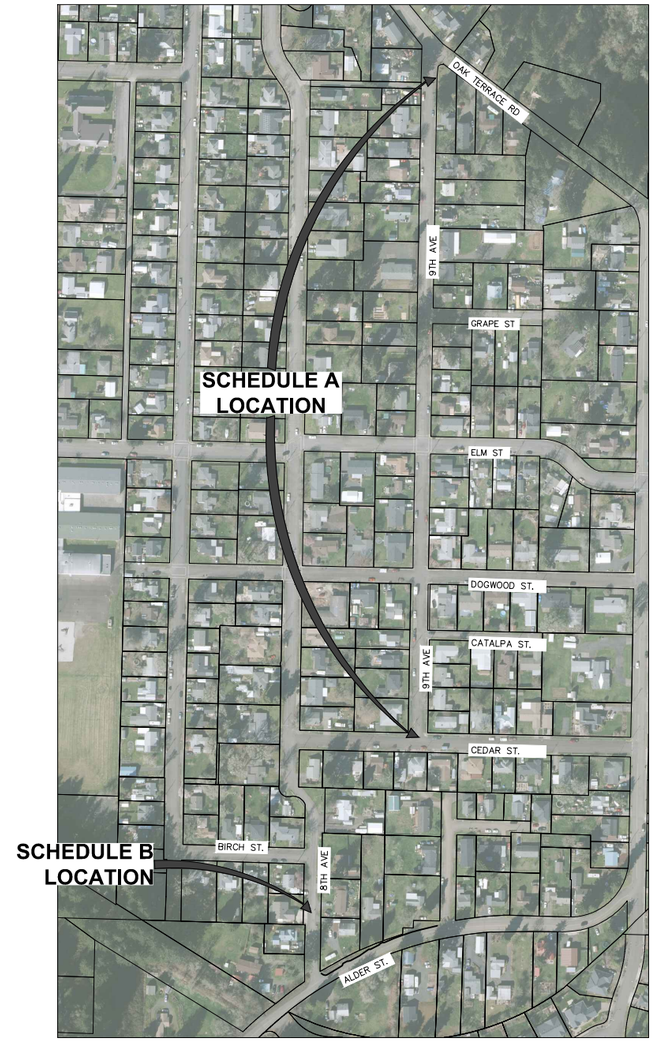

VICINITY MAP

NOT TO SCALE

REGISTERED PROFESSIONAL ENGINEER
83524PE
OREGON
NOV. 10, 2009
MATTHEW D. WADLINGTON
EXPIRATION DATE: 06/30/2022

Civil West Engineering Services, Inc.
200 FERRY ST SW
ALBANY, OR 97321
541-223-5130
www.civilwest.com

REV.	DATE	DESCRIPTION	BY

DESIGNED BY: ERM
DRAWN BY: FT
CHECKED BY: MDW
PROJECT NO: 2817-05

CITY OF SWEET HOME
LINN COUNTY OR.

2022 WATERMAIN REPLACEMENT PROJECT

COVER SHEET

Date
Sheet No. G1
APRIL 2

DATE:5/11/22 FILE:O:\CW_Projects\2817 Sweet Home\2817-005 9th Ave Water Distribution System Improvements Ph2\04 Final Design\Drawings\Dwg\2817-05-General.dwg

GENERAL NOTES

1. ATTENTION: OREGON LAW REQUIRES YOU TO FOLLOW RULES ADOPTED BY THE OREGON UTILITY NOTIFICATION CENTER. THOSE RULES ARE SET FORTH IN OAR 952-001-0010 THROUGH 952-001-0090. YOU MAY OBTAIN A COPY OF THE RULES BY CALLING THE CENTER.

   NOTE: THE TELEPHONE NUMBER FOR THE OREGON UTILITY NOTIFICATION CENTER IS (503) 232-1987.
   STAT. AUTH.: ORS 757.542 THROUGH ORS 757.562 AND ORS 757.993.

2. THE CONTRACTOR SHALL CONTACT 'ONE CALL' FOR UTILITY LOCATES PRIOR TO EXCAVATION. (1-800-332-2344)

3. THE EXISTING UTILITY CROSSINGS OF THE PIPELINES ARE SHOWN ACCORDING TO AVAILABLE INFORMATION. THE CONTRACTOR SHALL VERIFY THE LOCATION AND ELEVATION OF ALL THE UTILITY CROSSINGS ALONG THE LENGTH OF THE PIPELINES AS SPECIFIED. NO GUARANTEE IS MADE THAT ALL OF THE EXISTING UTILITIES ARE SHOWN. THE CONTRACTOR SHALL EXERCISE CAUTION WHEN EXCAVATING AND PROTECT ALL EXISTING UTILITIES FROM DAMAGE DURING HIS OPERATIONS.

4. OVERHEAD ELECTRICAL DISTRIBUTION SYSTEMS MAY NOT BE SPECIFICALLY INDICATED ON THE DRAWINGS BUT DO EXIST ALONG THE PIPELINE ROUTES.

5. EXISTING WATER METER BOXES AND VALVES MAY NOT BE SPECIFICALLY INDICATED ON THE DRAWINGS BUT DO EXIST ALONG THE PIPELINE ROUTES. CONTRACTOR SHALL LOCATE PRIOR TO THE START OF CONSTRUCTION.

6. THE LOCATION AND DEPTH SHOWN ON THESE DRAWINGS FOR THE EXISTING WATERLINES ARE APPROXIMATE ONLY AND BASED ON AS BUILT DRAWINGS, VALVE LOCATIONS AND OTHER INFORMATION. THERE ARE NO TRACER WIRES FOR LOCATING THE MAJORITY OF EXISTING WATERLINES AND EXISTING WATERLINES MAY BE IN CLOSE PROXIMITY TO NEW WATERLINE ROUTES.

7. CONTRACTOR SHALL POTHOLE AND LOCATE EXISTING WATERLINES PRIOR TO PLACEMENT OF NEW WATERLINES. EXISTING WATERLINES SHALL REMAIN IN SERVICE AND BE PROTECTED IN PLACE UNTIL COMPLETION OF NEW WATERLINES. CONTRACTOR SHALL PROVIDE TEMPORARY CONNECTIONS AS REQUIRED TO MAINTAIN CONTINUED SERVICE TO CUSTOMERS UNTIL COMPLETION OF NEW WATERLINE.

8. AFTER COMPLETION OF NEW WATERLINES AND ALL TESTING AND CONNECTIONS HAVE BEEN MADE. DESIGNATED PORTIONS OF THE EXISTING WATERLINES ARE TO BE ABANDONED IN PLACE. REMOVE TEMPORARY CONNECTIONS, EXISTING VALVES, COVERS AND PROVIDE END CAPS OR PLUGS AS REQUIRED FOR ABANDONMENT.

9. THE PIPELINE PROFILES HAVE BEEN MARKED TO INDICATE THE REQUIRED BACKFILL CLASSES (A, B, & E) SEE TECHNICAL SPECIFICATION FOR SPECIFIC BACKFILL MATERIAL REQUIREMENTS.

10. WHEN NO RECORD WAS AVAILABLE TO INDICATE THE ELEVATION OF AN EXISTING UTILITY A MINIMUM COVER OF 30-INCHES WAS ASSUMED. THE CONTRACTOR SHALL EXERCISE CAUTION WHILE EXCAVATING NEAR THESE ESTIMATED UTILITY LOCATIONS WHICH ARE INDICATED ON THE PROFILE DRAWINGS.

11. CONTRACTOR SHALL INSTALL NEW WATERLINES WITH A MINIMUM CLEARANCE OF 18-INCHES AT ALL CROSSINGS WITH SANITARY SEWER LINES AND/OR STORM DRAIN LINES, UNLESS OTHERWISE SPECIFIED OR APPROVED BY THE ENGINEER. WHERE NEW WATERLINES CROSS EXISTING UNDERGROUND TELEPHONE, ELECTRICAL, AND/OR GAS LINES, A MINIMUM CLEARANCE OF 6-INCHES SHALL BE UTILIZED, UNLESS OTHERWISE NOTED.

12. ALL MATERIALS IN CONTACT WITH WATER SHALL BE NSF 61 APPROVED.

13. ALL MATERIALS AND WORKMANSHIP SHALL CONFORM TO THE PROJECT DESIGN SPECIFICATIONS AND DRAWINGS. THESE DRAWINGS SHALL BE COORDINATED AND USED IN CONJUNCTION WITH THE TECHNICAL SPECIFICATIONS AND APPROVED SUBMITTALS.CONSTRUCTION PERMITS AS REQUIRED FROM LINCOLN COUNTY ROAD DEPARTMENT TO WORK WITHIN THE RIGHT-OF-WAY SHALL BE OBTAINED BY THE OWNER PRIOR TO THE START OF CONSTRUCTION.

14. PROPERTY AND RIGHT OF WAY LINES SHOWN IN THIS PLAN SET ARE APPROXIMATE AND BASED ON BEST AVAILABLE INFORMATION. CONTRACTOR SHALL OBTAIN TEMPORARY CONSTRUCTION ACCESS OR PERMISSION FROM PRIVATE LAND OWNERS PRIOR TO ENTERING PRIVATE PROPERTY.

15. PERMITS ASSOCIATED WITH THE TRENCH DE-WATERING SYSTEM SHALL BE THE RESPONSIBILITY OF THE CONTRACTOR.

16. IT IS THE RESPONSIBILITY OF THE CONTRACTOR TO POTHOLE EXISTING WATERLINES AND SURROUNDING UTILITIES TO DETERMINE THEIR EXACT LOCATION AND DEPTH. POTHOLE EXPLORATION SHALL OCCUR A MINIMUM OF SEVEN (7) DAYS PRIOR TO THE COMMENCEMENT OF WORK IN ANY AREA.

SHEET INDEX

SHEET INDEX

SHEET NO.	SHEET TITLE
	GENERAL
G1	COVER SHEET
G2	GENERAL NOTES
G3	LEGEND
	SCHEDULE A - 9TH ST
C1	9TH AVE EXISTING CONDITIONS
C2	9TH AVE IMPROVEMENTS OVERVIEW
C3	9TH AVE PLAN STA 0+00 TO 4+50
C4	9TH AVE PLAN STA 4+50 TO 8+75
C5	9TH AVE PLAN STA 8+75 TO 13+50
C6	9TH AVE PLAN STA 13+50 TO 16+64
	SCHEDULE B - 8TH & ALDER
C7	8TH & ALDER EXISTING CONDITION
C8	8TH & ALDER IMPROVEMENTS OVERVIEW
C9	8TH ST PLAN STA 0+00 TO 4+25
C10	8TH ST PLAN STA 4+25 TO 6+62
C11	BIRCH STREET
C12	ALDER STREET
	DETAILS
D1	WATER MAIN TRENCH AND BACKFILL DETAIL
D2	WATER SERVICE CONNECTION DETAIL
D3	THRUST BLOCK DETAIL
D4	VALVE BOX DETAIL
D5	FIRE HYDRANT ASSEMBLY DETAIL
D6	BLOW-OFF ASSEMBLY DETAIL
D7	ASPHALT CONCRETE PAVEMENT DETAIL
D8	SIDEWALK WITH LANDSCAPE STRIP DETAIL
D9	CURB AND GUTTER DETAIL
D10	CATCH BASIN DETAIL

GENERAL ABBREVIATIONS

AC	PAVEMENT
BC	BEGIN CURVE
BFV	BUTTERFLY VALVE
BLDG	BUILDING
BM	BENCH MARK
BOW	BACK OF WALK
CB	CATCH BASIN
CPLG	COUPLING
CTR	CENTER
CW	CITY WATER (POTABLE)
CWN	CITY WATER (NONPOTABLE)
D	DRAIN
DI	DUCTILE IRON
EC	END CURVE
EL	ELEVATION
EOC	EDGE OF CONCRETE
EOG	EDGE OF GRAVEL
EOP	EDGE OF PAVEMENT
EX	EXISTING
FH	FIRE HYDRANT
FL	FLOWLINE
FLG	FLANGE
FM	FORCE MAIN
GV	GATE VALVE
HDD	HORIZONTAL DIRECTIONAL DRILLING
HDPE	HIGH DENSITY POLYETHYLENE PIPE
HPC	HYPOCHLORITE
HS	HARVESTED SLUDGE
HSG	HIGH PRESSURE SLUDGE GAS
IE	INVERT ELEVATION
IP	IRON PIPE
LIP	LIP OF GUTTER
LT	LEFT
MH	MANHOLE
MJ	MECHANICAL JOINT
NG	NATURAL GAS
OF	OVERFLOW
PED	PEDESTAL
PRC	POINT OF REVERSE CURVATURE
PVC	POLY VINYL CHLORIDE PIPE
PVI	POINT OF VERTICAL INTERSECTION
ROW	RIGHT OF WAY
RS	RAW SEWAGE
RT	RIGHT
RW	RAW WATER
RWR	RECLAIMED WATER
SD	STORM DRAIN
SE	SPOT ELEVATION
SPW	SPILLWAY
SS	SANITARY SEWER
STA	STATION
SW	SIDEWALK
TBC	TOP BACK OF CURB
TD	TANK DRAIN
TG	TOP OF GRATE
TOE	TOP OF SLOPE
TOP	TOP OF BANK
TOC	TOP OF CURB
TRANS.	TRANSITION
TYP	TYPICAL
TW	TOP OF WALL
UNO	UNLESS NOTED OTHERWISE
V	VENT
VAC	VACUUM
VC	VENT (CHEMICAL)
WM	WATER METER
WV	WATER VALVE

REGISTERED PROFESSIONAL ENGINEER
83524PE
Matt Wadlington
OREGON
NOV. 10, 2009
MATTHEW D. WADLINGTON
EXPIRATION DATE: 06/30/2022

Civil West Engineering Services, Inc.
200 FERRY ST SW
ALBANY, OR 97321
541-223-5130
www.civilwest.com

REV.	DATE	DESCRIPTION	BY

DESIGNED BY: ERM
DRAWN BY: FT
CHECKED BY: MDW
PROJECT NO: 2817-05

CITY OF SWEET HOME
LINN COUNTY, OR.

2022 WATERMAIN REPLACEMENT PROJECT

GENERAL NOTES

Date APRIL 2
Sheet No. G2

DATE:5/11/22 FILE:O:\CW_Projects\2817 Sweet Home\2817-005 9th Ave Water Distribution System Improvements Ph2\04 Final Design\Drawings\Dwg\2817-05-General.dwg

EXISTING FEATURE LEGEND

SYMBOL LEGEND

- SANITARY SEWER MANHOLE
- STORM DRAIN MANHOLE
- CATCH BASIN
- WATER VALVE
- WATER METER
- FIRE HYDRANT
- CLEANOUT
- POWER POLE
- GUY ANCHOR
- POWER PEDESTAL
- TELEPHONE PEDESTAL
- SURVEY MARKER
- MAIL BOX
- AIR RELEASE VALVE
- BLOW OFF VALVE
- PROFILE SERVICE LATERAL CROSSING
- PROFILE TELEPHONE LINE CROSSING
- PROFILE ELECTRICAL LINE CROSSING
- PROFILE WATERLINE CROSSING
- PROFILE SANITARY SEWER CROSSING
- PROFILE STORM DRAIN CROSSING
- TREE/SHRUB
- STREET SIGN

LINETYPE LEGEND

- WATER LINE
- STORM DRAIN
- SANITARY SEWER
- ELECTRICAL
- OVER HEAD LINE
- TELEPHONE LINE
- GAS LINE
- TREELINE
- EDGE OF PAVEMENT
- RIGHT OF WAY
- CONTOURS

HATCH LEGEND

- CONCRETE
- PAVEMENT
- GRANULAR MATERIALS SUCH AS CRUSHED ROCK OR GRAVEL
- NATURAL GROUND
- WETLANDS
- BUILDING

NEW FEATURE LEGEND

SYMBOL LEGEND

- SANITARY SEWER MANHOLE
- STORM DRAIN MANHOLE
- CATCH BASIN
- WATER VALVE
- WATER METER
- FIRE HYDRANT
- CLEANOUT
- TEE/CROSS FITTING
- ELBOW FITTING
- REDUCER FITTING
- MECHANICAL JOINT ADAPTER
- AIR RELEASE VALVE
- BLOW OFF VALVE
- MAILBOX

LINETYPE LEGEND

- WATER LINE
- STORM DRAIN
- SANITARY SEWER
- ELECTRICAL
- OVER HEAD LINE
- TELEPHONE LINE
- GAS LINE
- CONTOURS

HATCH LEGEND

- CONCRETE
- PAVEMENT
- GRANULAR MATERIALS SUCH AS CRUSHED ROCK OR GRAVEL
- DRIVEWAY
- ADDITIVE ALTERNATE AC OVERLAY
- ADDITIVE ALTERNATE DRIVEWAY

REGISTERED PROFESSIONAL ENGINEER
83524PE
OREGON
NOV. 10, 2009
MATTHEW D. WADLINGTON
EXPIRATION DATE: 06/30/2022

Civil West Engineering Services, Inc.
200 FERRY ST SW
ALBANY, OR 97321
541-223-5130
www.civilwest.com

REV.	DATE	DESCRIPTION	BY

DESIGNED BY: ERM
DRAWN BY: FT
CHECKED BY: MDW
PROJECT NO: 2817-05

CITY OF SWEET HOME
LINN COUNTY OR.

2022 WATERMAIN REPLACEMENT PROJECT

LEGEND

Date
Sheet No. G3
APRIL 2

DATE:5/11/22 FILE:O:\CW_Projects\2817 Sweet Home\2817-005 9th Ave Water Distribution System Improvements Ph2\04 Final Design\Drawings\Dwg\2817-05-General.dwg

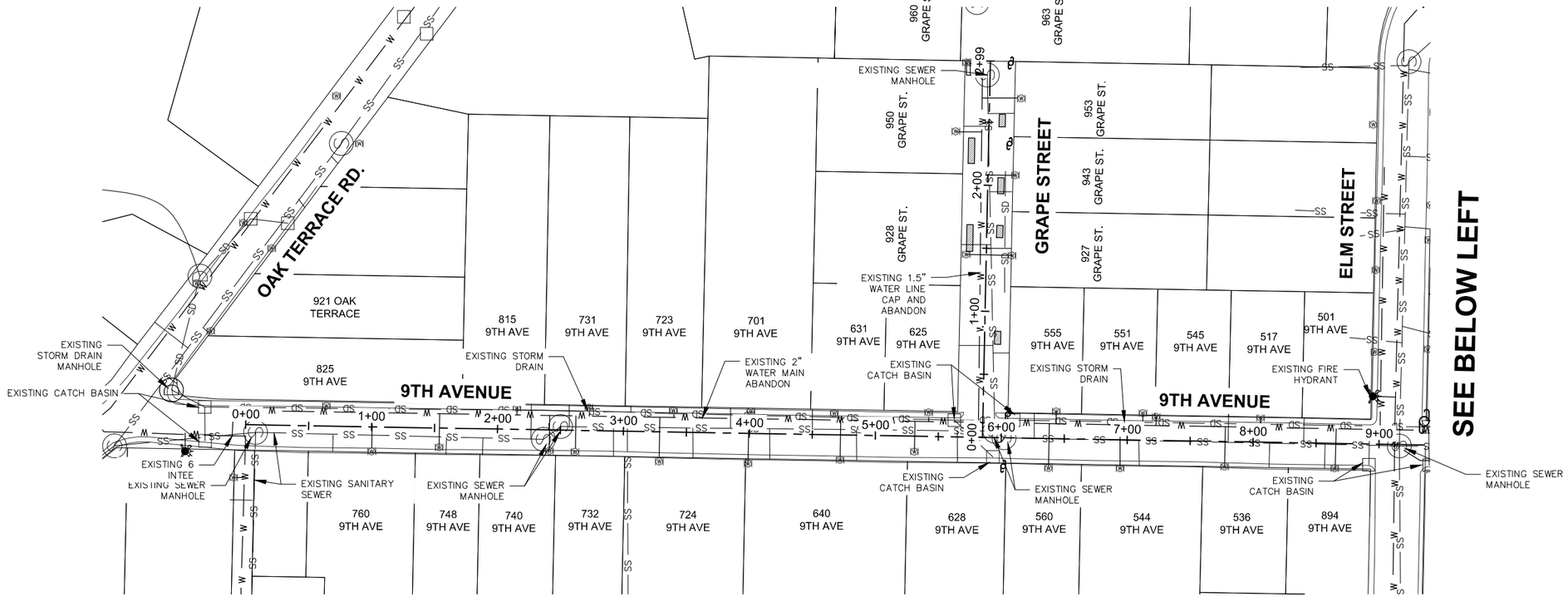

1 / C1 — 9TH AVE EXISTING CONDITIONS

SCALE: 1" = 100'

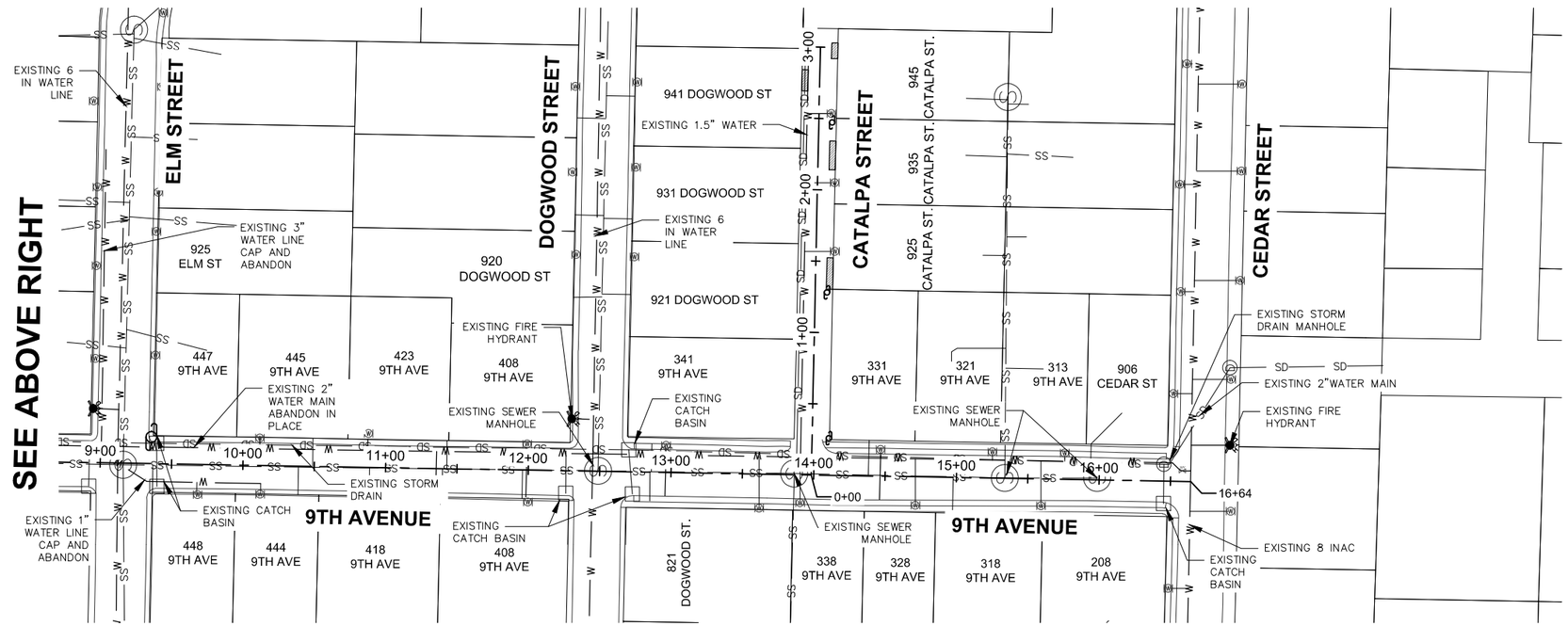

2 / C1 — 9TH AVE EXISTING CONDITIONS

SCALE: 1" = 100'

REGISTERED PROFESSIONAL ENGINEER
83524PE
OREGON
NOV. 10, 2009
MATTHEW D. WADLINGTON
RENEWS: 06/30/2022

Civil West Engineering Services, Inc.
541-223-5130
www.civilwest.com
200 FERRY ST SW
ALBANY, OR 97321

REV.	DATE	DESCRIPTION	BY

DESIGNED BY: ERM
DRAWN BY: FT
CHECKED BY: MDW
PROJECT NO: 2817-05

CITY OF SWEET HOME
LINN COUNTY, OR

2022 WATERMAIN REPLACEMENT PROGRAM

9TH AVE EXISTING CONDITIONS

Sheet No. C1

Date APRIL 2

DATE:5/11/22 FILE:O:\CW_Projects\2817 Sweet Home\2817-005 9th Ave Water Distribution System Improvements Ph2\04 Final Design\Drawings\Dwg\2817-05-DESIGN 9th.dwg

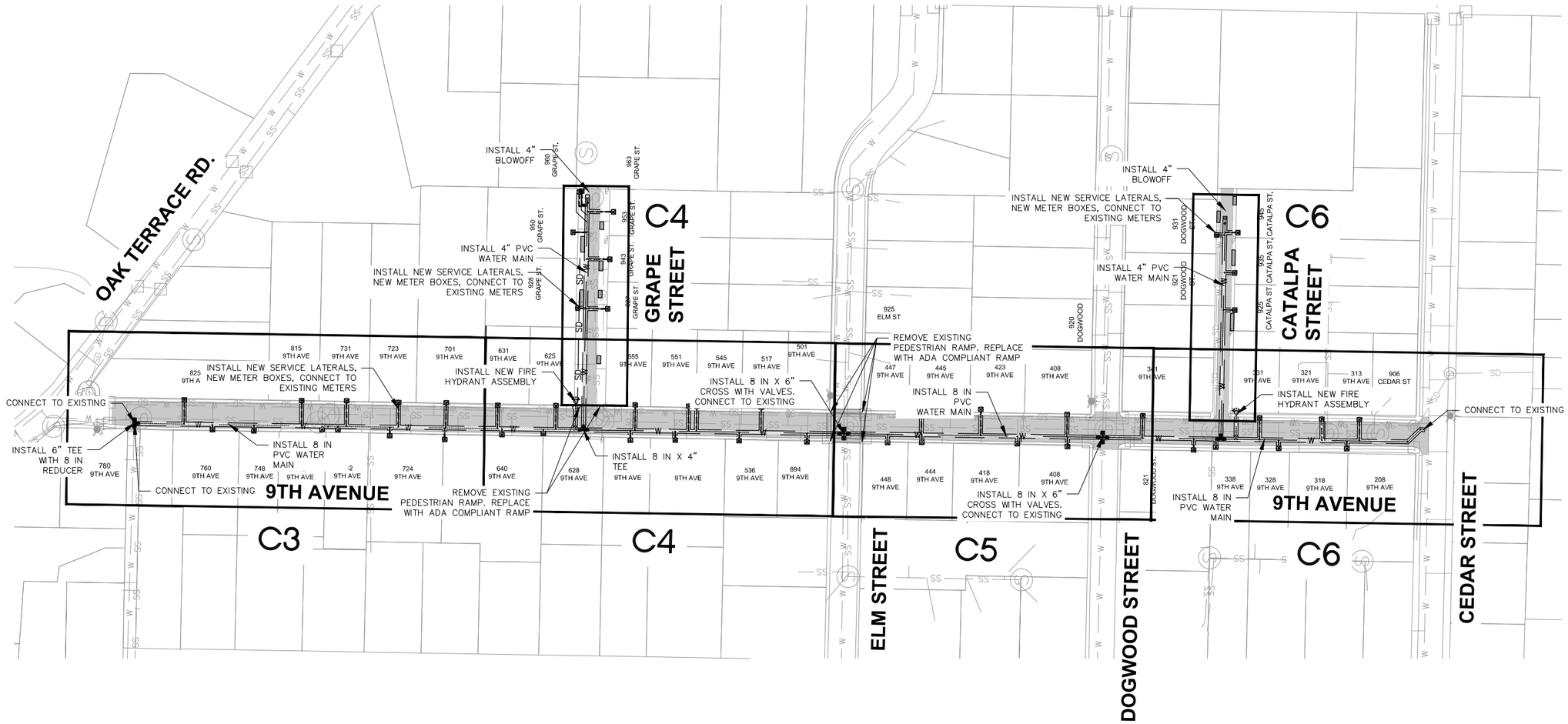

1
C2

IMPROVEMENT OVERVIEW PLAN

SCALE: NTS

REGISTERED PROFESSIONAL ENGINEER
83524PE
Matt Wadlington
OREGON
NOV. 10, 2009
MATTHEW D. WADLINGTON

RENEWS: 06/30/2022

Civil West Engineering Services, Inc.

541-223-5130
www.civilwest.com

200 FERRY ST SW
ALBANY, OR 97321

REV.	DATE	DESCRIPTION	BY

DESIGNED BY: ERM
DRAWN BY: FT
CHECKED BY: MDW
PROJECT NO: 2817-05

CITY OF SWEET HOME
LINN COUNTY, OR

2022 WATERMAIN REPLACEMENT PROGRAM

9TH AVE IMPROVEMENTS OVERVIEW

Sheet No. C2

Date APRIL 2

DATE:5/11/22 FILE:O:\CW_Projects\2817 Sweet Home\2817-005 9th Ave Water Distribution System Improvements Ph2\04 Final Design\Drawings\Dwg\2817-05-DESIGN 9th.dwg

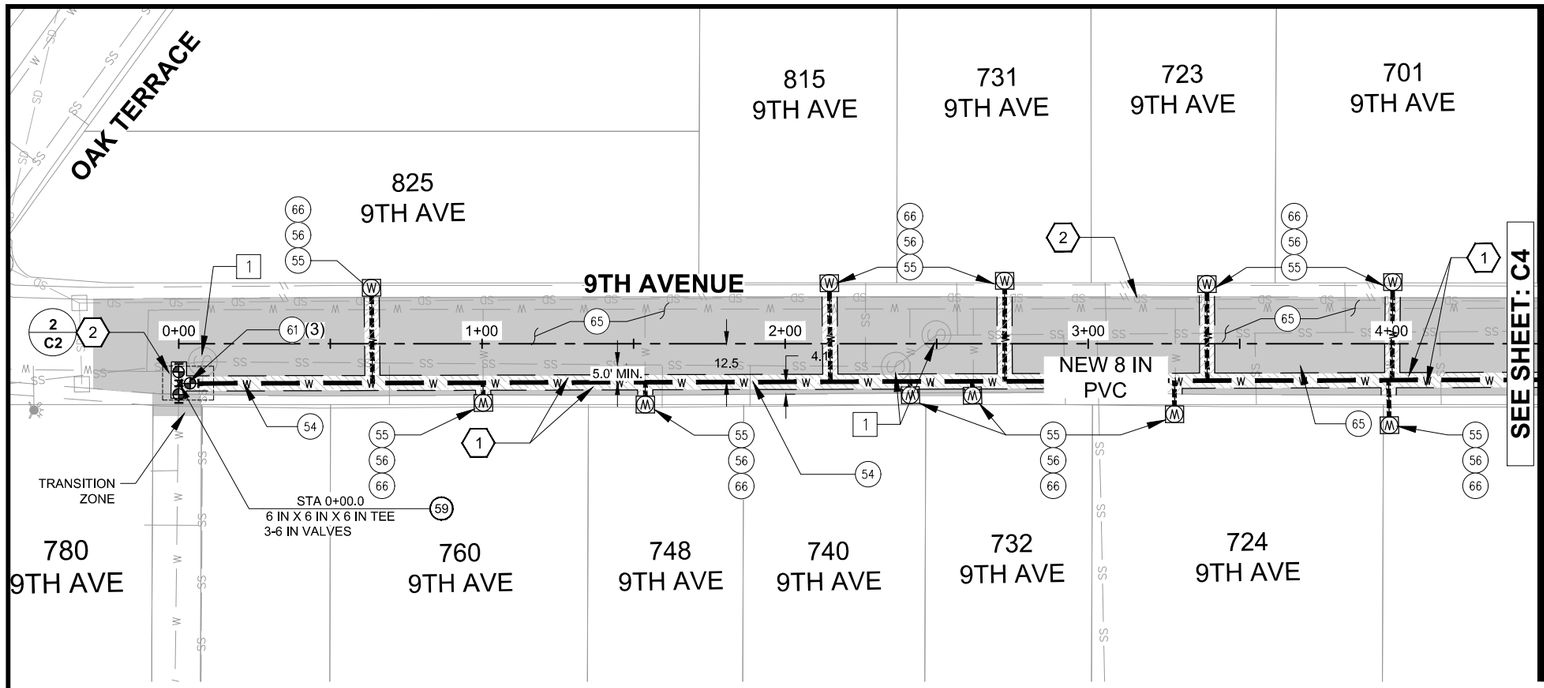

1 / C3 PLAN STA 0+00 TO 4+50

PLAN SCALE
25 0 25 50
SCALE IN FEET
1"=50'

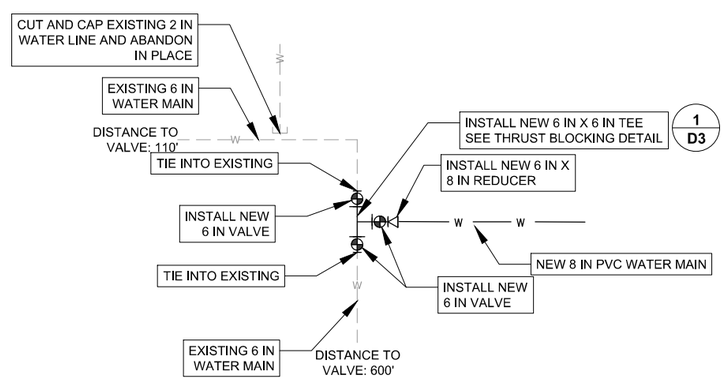

2 / C3 NEW 6 IN X 6 IN X 6 IN TEE CONNECTION
SCALE: NTS

DEMOLITION NOTES:

1	SAWCUT AND REMOVE.
2	CAP EXISTING AND ABANDON IN PLACE.

IMPROVEMENT NOTES:

54	INSTALL NEW PVC WATER PIPE (C-900) INCLUDING FITTINGS AND FIXTURES WITH 36" COVER MINIMUM. SEE DETAIL, 1/D1
55	INSTALL NEW WATER SERVICE LATERAL. SEE DETAILS, 1/D2
56	INSTALL NEW WATER METER BOX. SEE DETAILS, 1/D2
59	INSTALL THRUST BLOCKS AND MEGALUGS AT EACH TRANSITIONAL JOINT. SEE DETAIL, 1/D3
61	INSTALL NEW WATER VALVE PER PROJECT SPECIFICATIONS. SEE DETAIL, 1/D4
63	INSTALL NEW FIRE HYDRANT ASSEMBLY AND SERVICE LINE. ALL BEDDING, THRUST BLOCKS, AND FIXTURES SHALL CONFORM TO PROJECT PLANS AND SPECIFICATIONS. SEE DETAIL, 1/D5 1/D3
64	INSTALL BLOW OFF VALVE. SEE DETAIL, 1/D6
65	OVERLAY ASPHALT, MATCH EXISTING SLOPES, SEE DETAILS, 1/D7 2/D7
66	REPLACE SIDEWALK, CURB AND GUTTER, MATCH EXISTING. SEE DETAIL, 1/D8 1/D9
67	4" PERFORATED PIPE TO BE INSTALLED BY OTHERS
68	REMOVE EXISTING PEDESTRIAN RAMP. REPLACE WITH ADA COMPLIANT PEDESTRIAN RAMP

KEYED NOTES:

1	PROTECT IN PLACE. RAISE AS NEEDED
2	POTHOLE EXISTING PRIOR TO WATERLINE INSTALLATION

SHEET NOTES:

1. CONTRACTOR SHALL CONTACT "ONE CALL" FOR UTILITY LOCATES PRIOR TO THE START OF ANY EXCAVATION.
2. CONTRACTOR SHALL POTHOLE EXISTING WATERLINE PRIOR TO NEW WATERLINE CONSTRUCTION TO CONFIRM EXISTING WATERLINE DEPTH LOCATION, AND FITTING REQUIREMENTS FOR CONNECTION OF NEW WATERLINE TO EXISTING.
3. TYPICAL BURY FOR NEW WATERLINE SHALL BE 36" TO TOP OF PIPE. ADJUST DEPTH OF BURY AS REQUIRED TO MAINTAIN CONSTANT GRADE
4. AFTER COMPLETION OF NEW WATERLINE AND ALL TESTING AND CONNECTIONS HAVE BEEN MADE, DESIGNATED PORTIONS OF EXISTING WATERLINE ARE TO BE ABANDONED IN PLACE. EXISTING VALVES AND BOXES SHALL BE REMOVED IN THEIR ENTIRETY ALONG WITH ANY TEMPORARY SPOOLS AND CONNECTIONS. PROVIDE END CAPS, BLIND FLANGES OR PLUGS AS REQUIRED FOR COMPLETE ABANDONMENT OF DESIGNATED PORTIONS OF EXISTING WATERLINES.

REGISTERED PROFESSIONAL ENGINEER
83524PE
OREGON
NOV. 10, 2009
MATTHEW D. WADLINGTON
RENEWS: 06/30/2022

Civil West Engineering Services, Inc.
541-223-5130
www.civilwest.com
200 FERRY ST SW
ALBANY, OR 97321

REV.	DATE	DESCRIPTION	BY

DESIGNED BY: ERM
DRAWN BY: FT
CHECKED BY: MDW
PROJECT NO: 2817-05

CITY OF SWEET HOME
LINN COUNTY, OR

2022 WATERMAIN REPLACEMENT PROGRAM

9TH AVE PLAN STA 0+00 TO 4+50

Date APRIL 2
Sheet No. C3

DATE:5/11/22 FILE:O:\CW_Projects\2817 Sweet Home\2817-005 9th Ave Water Distribution System Improvements Ph2\04 Final Design\Drawings\Dwg\2817-05-DESIGN 9th.dwg

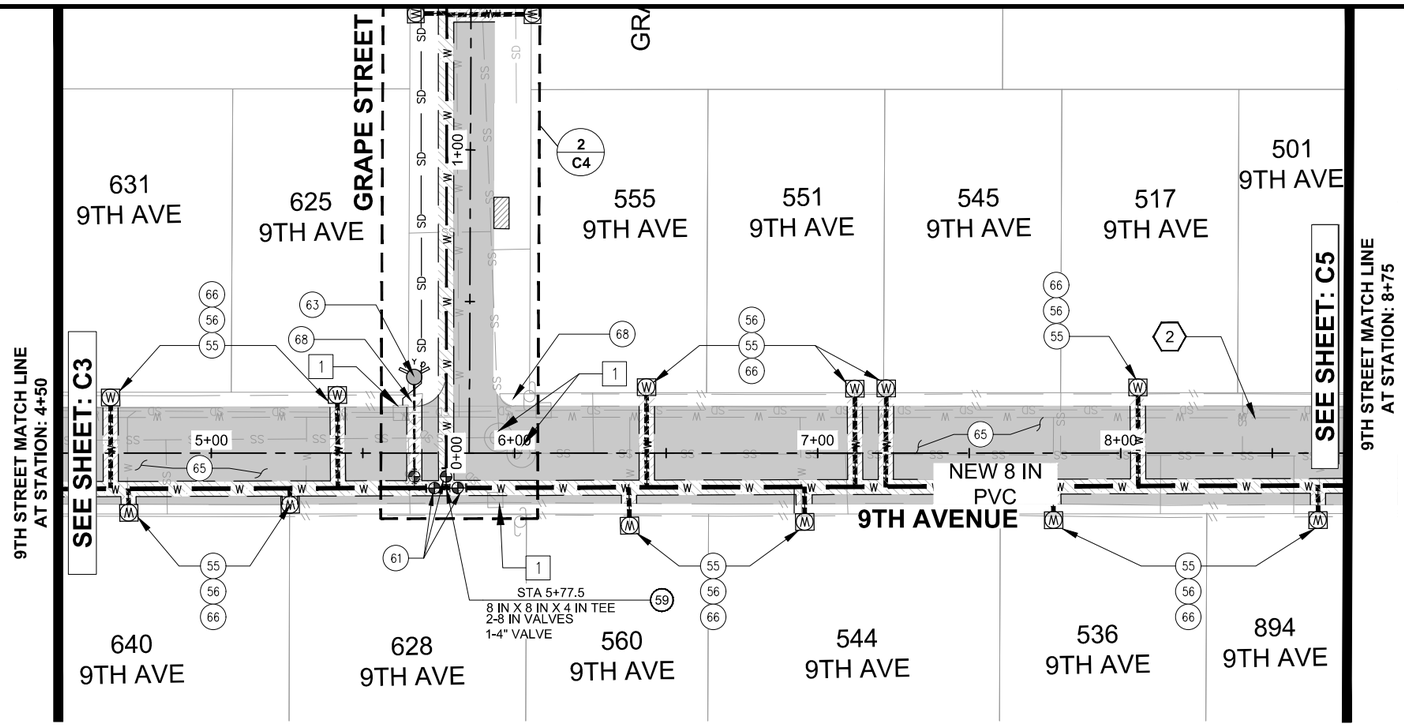

1 C4 PLAN STA 4+50 TO 8+75

PLAN SCALE
25 0 25 50
SCALE IN FEET
1"=50'

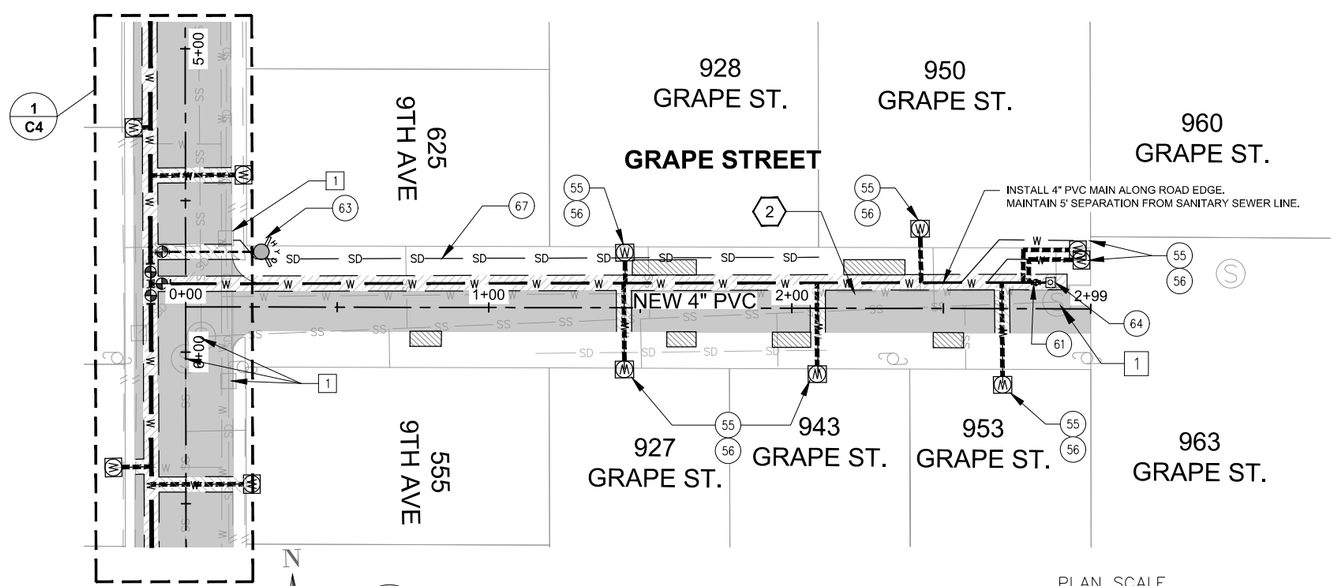

2 C4 GRAPE STREET IMPROVEMENTS

PLAN SCALE
25 0 25 50
SCALE IN FEET
1"=50'

DEMOLITION NOTES:

1	SAWCUT AND REMOVE.
2	CAP EXISTING AND ABANDON IN PLACE.

IMPROVEMENT NOTES:

54	INSTALL NEW PVC WATER PIPE (C-900) INCLUDING FITTINGS AND FIXTURES WITH 36" COVER MINIMUM. SEE DETAIL, 1/D1
55	INSTALL NEW WATER SERVICE LATERAL. SEE DETAILS, 1/D2
56	INSTALL NEW WATER METER BOX. SEE DETAILS, 1/D2
59	INSTALL THRUST BLOCKS AND MEGALUGS AT EACH TRANSITIONAL JOINT. SEE DETAIL, 1/D3
61	INSTALL NEW WATER VALVE PER PROJECT SPECIFICATIONS. SEE DETAIL, 1/D4
63	INSTALL NEW FIRE HYDRANT ASSEMBLY AND SERVICE LINE. ALL BEDDING, THRUST BLOCKS, AND FIXTURES SHALL CONFORM TO PROJECT PLANS AND SPECIFICATIONS. SEE DETAIL, 1/D5 1/D3
64	INSTALL BLOW OFF VALVE. SEE DETAIL, 1/D6
65	OVERLAY ASPHALT, MATCH EXISTING SLOPES, SEE DETAILS, 1/D7 2/D7
66	REPLACE SIDEWALK, CURB AND GUTTER, MATCH EXISTING. SEE DETAIL, 1/D8 1/D9
67	4" PERFORATED PIPE TO BE INSTALLED BY OTHERS
68	REMOVE EXISTING PEDESTRIAN RAMP. REPLACE WITH ADA COMPLIANT PEDESTRIAN RAMP

KEYED NOTES:

1	PROTECT IN PLACE. RAISE AS NEEDED
2	POTHOLE EXISTING PRIOR TO WATERLINE INSTALLATION

SHEET NOTES:

1. CONTRACTOR SHALL CONTACT "ONE CALL" FOR UTILITY LOCATES PRIOR TO THE START OF ANY EXCAVATION.
2. CONTRACTOR SHALL POTHOLE EXISTING WATERLINE PRIOR TO NEW WATERLINE CONSTRUCTION TO CONFIRM EXISTING WATERLINE DEPTH LOCATION, AND FITTING REQUIREMENTS FOR CONNECTION OF NEW WATERLINE TO EXISTING.
3. TYPICAL BURY FOR NEW WATERLINE SHALL BE 36" TO TOP OF PIPE. ADJUST DEPTH OF BURY AS REQUIRED TO MAINTAIN CONSTANT GRADE
4. AFTER COMPLETION OF NEW WATERLINE AND ALL TESTING AND CONNECTIONS HAVE BEEN MADE, DESIGNATED PORTIONS OF EXISTING WATERLINE ARE TO BE ABANDONED IN PLACE. EXISTING VALVES AND BOXES SHALL BE REMOVED IN THEIR ENTIRETY ALONG WITH ANY TEMPORARY SPOOLS AND CONNECTIONS. PROVIDE END CAPS, BLIND FLANGES OR PLUGS AS REQUIRED FOR COMPLETE ABANDONMENT OF DESIGNATED PORTIONS OF EXISTING WATERLINES.

REGISTERED PROFESSIONAL ENGINEER
83524PE
OREGON
NOV. 10, 2009
MATTHEW D. WADLINGTON
RENEWS: 06/30/2022

Civil West Engineering Services, Inc.
541-223-5130
www.civilwest.com
200 FERRY ST SW
ALBANY, OR 97321

REV.	DATE	DESCRIPTION	BY

DESIGNED BY: ERM
DRAWN BY: FT
CHECKED BY: MDW
PROJECT NO: 2817-05

CITY OF SWEET HOME
LINN COUNTY, OR

2022 WATERMAIN REPLACEMENT PROGRAM

9TH AVE PLAN STA 4+50 TO 8+75

Sheet No. C4

Date APRIL 2

DATE:5/11/22 FILE:O:\CW_Projects\2817 Sweet Home\2817-005 9th Ave Water Distribution System Improvements Ph2\04 Final Design\Drawings\Dwg\2817-05-DESIGN 9th.dwg

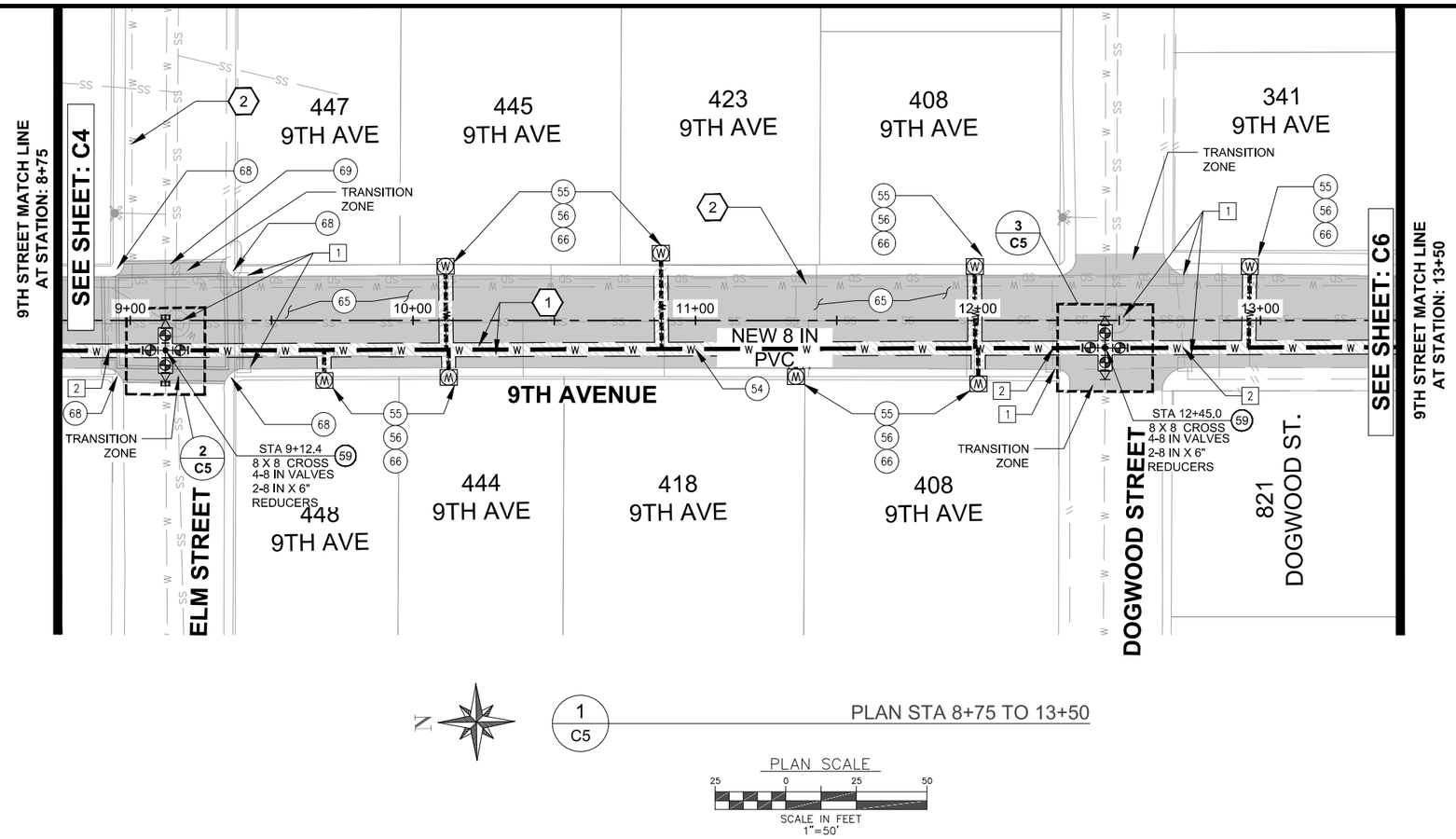

1 / C5 PLAN STA 8+75 TO 13+50

PLAN SCALE
25 0 25 50
SCALE IN FEET
1"=50'

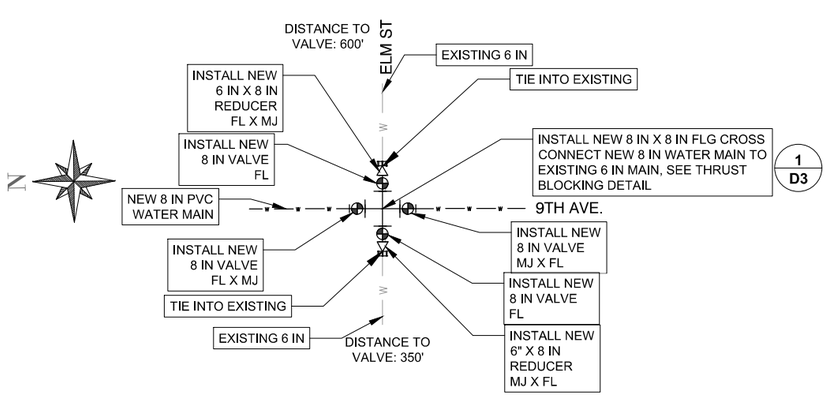

2 / C5 NEW 6 IN X 8 IN CROSS TEE AT ELM ST
SCALE: NTS

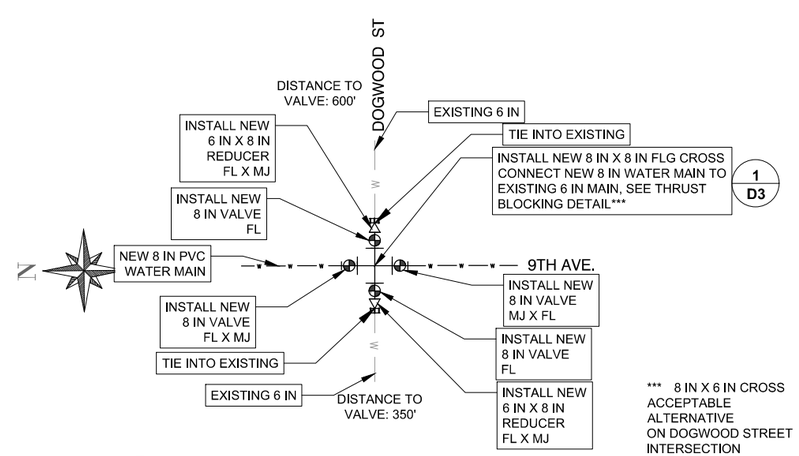

*** 8 IN X 6 IN CROSS ACCEPTABLE ALTERNATIVE ON DOGWOOD STREET INTERSECTION

3 / C5 NEW 6 IN X 8 IN CROSS TEE AT DOGWOOD ST
SCALE: NTS

DEMOLITION NOTES:

1	SAWCUT AND REMOVE.
2	CAP EXISTING AND ABANDON IN PLACE.

IMPROVEMENT NOTES:

54	INSTALL NEW PVC WATER PIPE (C-900) INCLUDING FITTINGS AND FIXTURES WITH 36" COVER MINIMUM. SEE DETAIL, 1/D1
55	INSTALL NEW WATER SERVICE LATERAL. SEE DETAILS, 1/D2
56	INSTALL NEW WATER METER BOX. SEE DETAILS, 1/D2
59	INSTALL THRUST BLOCKS AND MEGALUGS AT EACH TRANSITIONAL JOINT. SEE DETAIL, 1/D3
61	INSTALL NEW WATER VALVE PER PROJECT SPECIFICATIONS. SEE DETAIL, 1/D4
63	INSTALL NEW FIRE HYDRANT ASSEMBLY AND SERVICE LINE. ALL BEDDING, THRUST BLOCKS, AND FIXTURES SHALL CONFORM TO PROJECT PLANS AND SPECIFICATIONS. SEE DETAIL, 1/D5 1/D3
64	INSTALL BLOW OFF VALVE. SEE DETAIL, 1/D6
65	OVERLAY ASPHALT, MATCH EXISTING SLOPES, SEE DETAILS, 1/D7 2/D7
66	REPLACE SIDEWALK, CURB AND GUTTER, MATCH EXISTING. SEE DETAIL, 1/D8 1/D9
67	4" PERFORATED PIPE TO BE INSTALLED BY OTHERS
68	REMOVE EXISTING PEDESTRIAN RAMP. REPLACE WITH ADA COMPLIANT PEDESTRIAN RAMP
69	REMOVE AND REPLACE CROSSWALK THERMOPLASTIC PER ODOT TM530

KEYED NOTES:

1	PROTECT IN PLACE. RAISE AS NEEDED
2	POTHOLE EXISTING PRIOR TO WATERLINE INSTALLATION

SHEET NOTES:

1. CONTRACTOR SHALL CONTACT "ONE CALL" FOR UTILITY LOCATES PRIOR TO THE START OF ANY EXCAVATION.
2. CONTRACTOR SHALL POTHOLE EXISTING WATERLINE PRIOR TO NEW WATERLINE CONSTRUCTION TO CONFIRM EXISTING WATERLINE DEPTH LOCATION, AND FITTING REQUIREMENTS FOR CONNECTION OF NEW WATERLINE TO EXISTING.
3. TYPICAL BURY FOR NEW WATERLINE SHALL BE 36" TO TOP OF PIPE. ADJUST DEPTH OF BURY AS REQUIRED TO MAINTAIN CONSTANT GRADE
4. AFTER COMPLETION OF NEW WATERLINE AND ALL TESTING AND CONNECTIONS HAVE BEEN MADE, DESIGNATED PORTIONS OF EXISTING WATERLINE ARE TO BE ABANDONED IN PLACE. EXISTING VALVES AND BOXES SHALL BE REMOVED IN THEIR ENTIRETY ALONG WITH ANY TEMPORARY SPOOLS AND CONNECTIONS. PROVIDE END CAPS, BLIND FLANGES OR PLUGS AS REQUIRED FOR COMPLETE ABANDONMENT OF DESIGNATED PORTIONS OF EXISTING WATERLINES.

REGISTERED PROFESSIONAL ENGINEER
83524PE
OREGON
NOV. 10, 2009
MATTHEW D. WADLINGTON
RENEWS: 06/30/2022

Civil West Engineering Services, Inc.
541-223-5130
www.civilwest.com
200 FERRY ST SW
ALBANY, OR 97321

REV.	DATE	DESCRIPTION	BY

DESIGNED BY: ERM
DRAWN BY: FT
CHECKED BY: MDW
PROJECT NO: 2817-05

CITY OF SWEET HOME
LINN COUNTY, OR

2022 WATERMAIN REPLACEMENT PROGRAM

9TH AVE PLAN STA 8+75 TO 13+50

Sheet No. C5
Date APRIL 2

DATE:5/11/22 FILE:O:\CW_Projects\2817 Sweet Home\2817-005 9th Ave Water Distribution System Improvements Ph2\04 Final Design\Drawings\Dwg\2817-05-DESIGN 9th.dwg

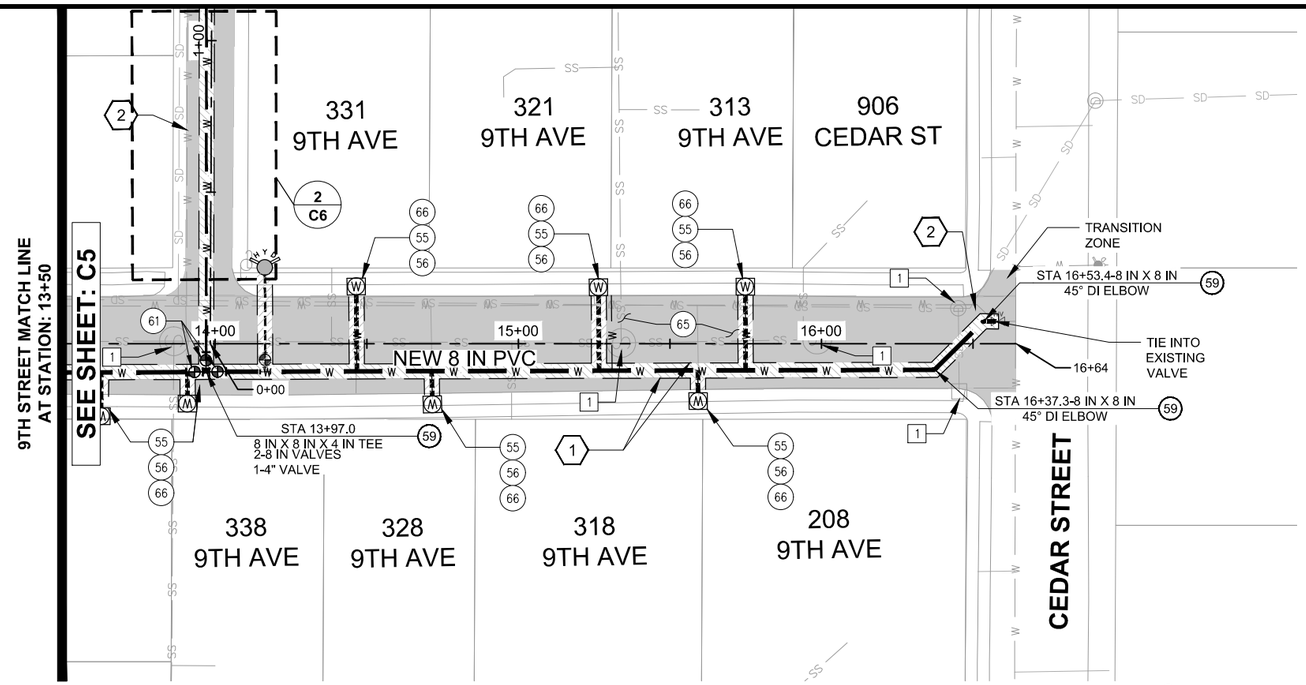

1 / C6 PLAN STA. 13+50 TO STA. 16+63

PLAN SCALE

25 0 25 50

SCALE IN FEET
1"=50'

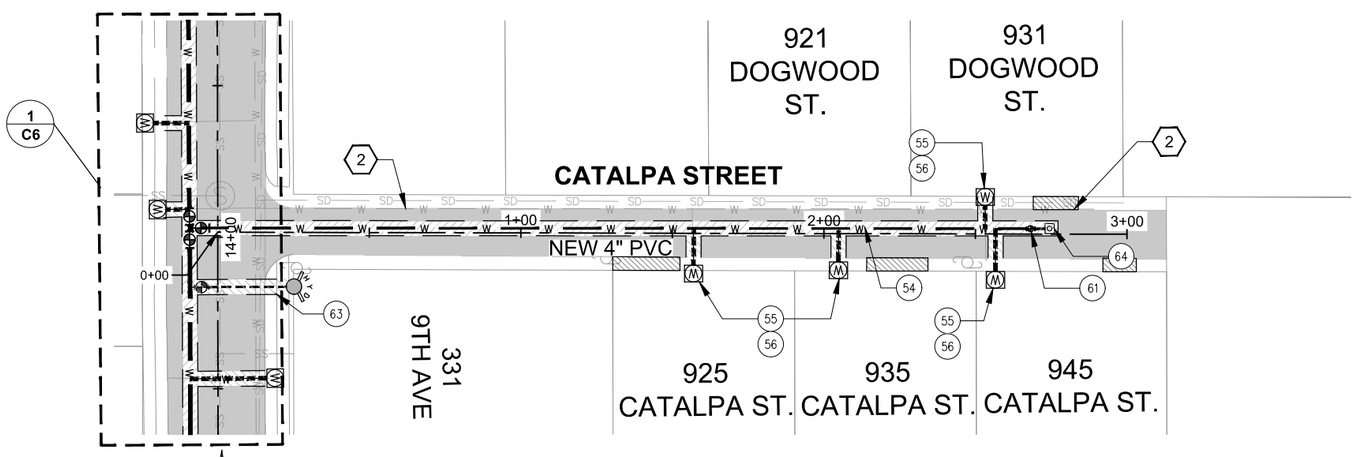

2 / C6 PLAN STA. 0+00 TO STA. 3+00

PLAN SCALE

25 0 25 50

SCALE IN FEET
1"=50'

DEMOLITION NOTES:

1	SAWCUT AND REMOVE.
2	CAP EXISTING AND ABANDON IN PLACE.

IMPROVEMENT NOTES:

54	INSTALL NEW PVC WATER PIPE (C-900) INCLUDING FITTINGS AND FIXTURES WITH 36" COVER MINIMUM. SEE DETAIL, 1/D1
55	INSTALL NEW WATER SERVICE LATERAL. SEE DETAILS, 1/D2
56	INSTALL NEW WATER METER BOX. SEE DETAILS, 1/D2
59	INSTALL THRUST BLOCKS AND MEGALUGS AT EACH TRANSITIONAL JOINT. SEE DETAIL, 1/D3
61	INSTALL NEW WATER VALVE PER PROJECT SPECIFICATIONS. SEE DETAIL, 1/D4
63	INSTALL NEW FIRE HYDRANT ASSEMBLY AND SERVICE LINE. ALL BEDDING, THRUST BLOCKS, AND FIXTURES SHALL CONFORM TO PROJECT PLANS AND SPECIFICATIONS. SEE DETAIL, 1/D5 1/D3
64	INSTALL BLOW OFF VALVE. SEE DETAIL, 1/D6
65	OVERLAY ASPHALT, MATCH EXISTING SLOPES, SEE DETAILS, 1/D7 2/D7
66	REPLACE SIDEWALK, CURB AND GUTTER, MATCH EXISTING. SEE DETAIL, 1/D8 1/D9
67	4" PERFORATED PIPE TO BE INSTALLED BY OTHERS
68	REMOVE EXISTING PEDESTRIAN RAMP. REPLACE WITH ADA COMPLIANT PEDESTRIAN RAMP

KEYED NOTES:

1	PROTECT IN PLACE. RAISE AS NEEDED
2	POTHOLE EXISTING PRIOR TO WATERLINE INSTALLATION

SHEET NOTES:

1. CONTRACTOR SHALL CONTACT "ONE CALL" FOR UTILITY LOCATES PRIOR TO THE START OF ANY EXCAVATION.
2. CONTRACTOR SHALL POTHOLE EXISTING WATERLINE PRIOR TO NEW WATERLINE CONSTRUCTION TO CONFIRM EXISTING WATERLINE DEPTH LOCATION, AND FITTING REQUIREMENTS FOR CONNECTION OF NEW WATERLINE TO EXISTING.
3. TYPICAL BURY FOR NEW WATERLINE SHALL BE 36" TO TOP OF PIPE. ADJUST DEPTH OF BURY AS REQUIRED TO MAINTAIN CONSTANT GRADE
4. AFTER COMPLETION OF NEW WATERLINE AND ALL TESTING AND CONNECTIONS HAVE BEEN MADE, DESIGNATED PORTIONS OF EXISTING WATERLINE ARE TO BE ABANDONED IN PLACE. EXISTING VALVES AND BOXES SHALL BE REMOVED IN THEIR ENTIRETY ALONG WITH ANY TEMPORARY SPOOLS AND CONNECTIONS. PROVIDE END CAPS, BLIND FLANGES OR PLUGS AS REQUIRED FOR COMPLETE ABANDONMENT OF DESIGNATED PORTIONS OF EXISTING WATERLINES.

REGISTERED PROFESSIONAL ENGINEER
83524PE
OREGON
NOV. 10, 2009
MATTHEW D. WADLINGTON
RENEWS: 06/30/2022

Civil West Engineering Services, Inc.
541-223-5130
www.civilwest.com
200 FERRY ST SW
ALBANY, OR 97321

REV.	DATE	DESCRIPTION	BY

DESIGNED BY: ERM
DRAWN BY: FT
CHECKED BY: MDW
PROJECT NO: 2817-05

CITY OF SWEET HOME
LINN COUNTY, OR

2022 WATERMAIN REPLACEMENT PROGRAM

9TH AVE PLAN STA 13+50 TO 16+64

Sheet No. C6

Date APRIL 2

DATE:5/11/22 FILE:O:\CW_Projects\2817 Sweet Home\2817-005 9th Ave Water Distribution System Improvements Ph2\04 Final Design\Drawings\Dwg\2817-05-DESIGN 9th.dwg

1
C7

EXISTING CONDITIONS

N

PLAN SCALE

50 0 50 100

SCALE IN FEET
1"=100'

REGISTERED PROFESSIONAL ENGINEER
83524PE
Matt Wadlington
OREGON
NOV. 10, 2009
MATTHEW D. WADLINGTON

RENEWS: 06/30/2022

Civil West Engineering Services, Inc.

541-223-5130
www.civilwest.com

200 FERRY ST SW
ALBANY, OR 97321

REV.	DATE	DESCRIPTION	BY

DESIGNED BY: ERM
DRAWN BY: FT
CHECKED BY:
PROJECT NO: 2817-05

CITY OF SWEET HOME
LINN COUNTY, OR

2022 WATERMAIN REPLACEMENT PROGRAM

8TH + ALDER EXISTING CONDITION

Sheet No. C7

Date APRIL 2

DATE:5/11/22 FILE:O:\CW_Projects\2817 Sweet Home\2817-005 9th Ave Water Distribution System Improvements Ph2\04 Final Design\Drawings\Dwg\2817-05 DESIGN ALDER.dwg

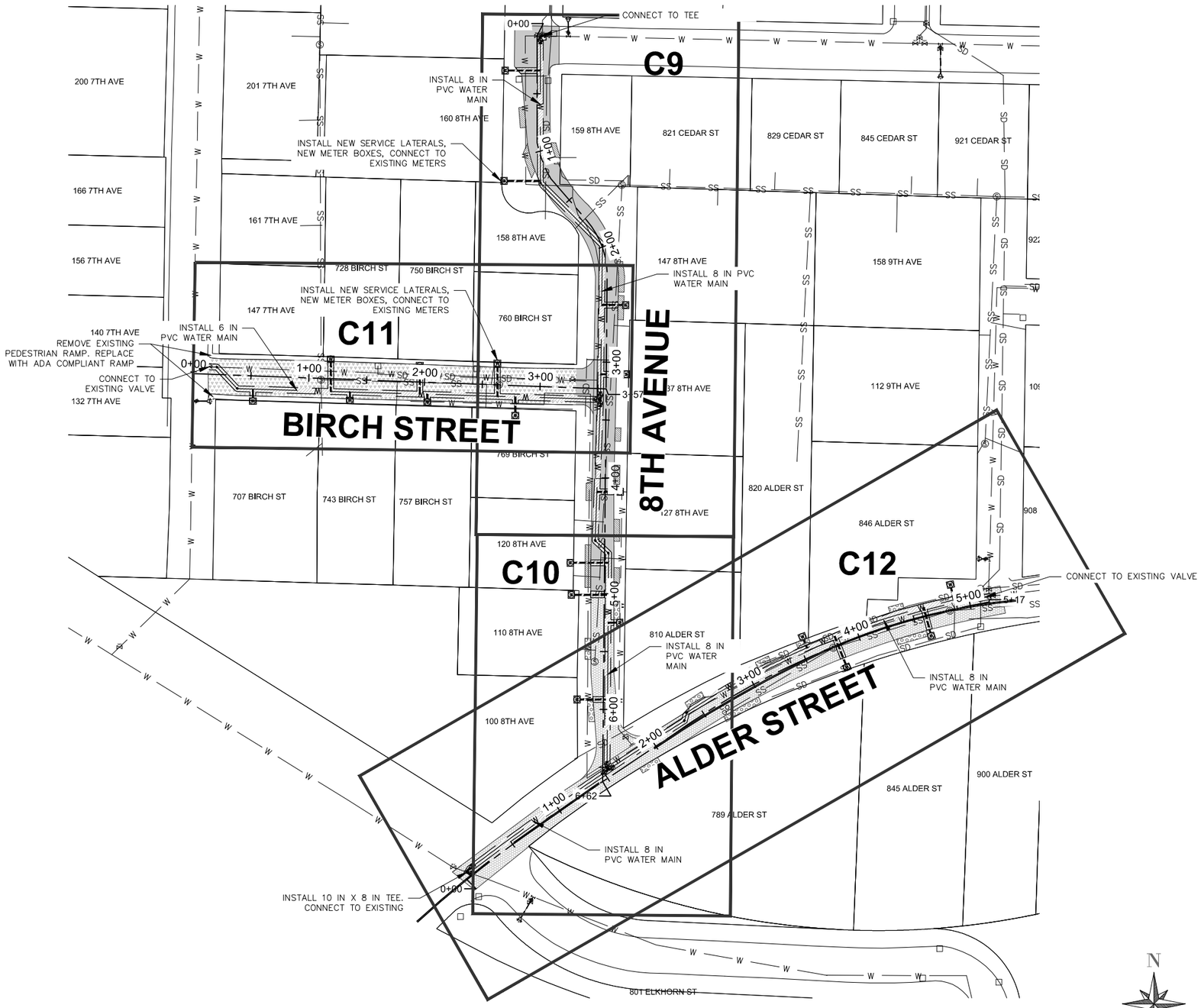

1
C8

IMPROVEMENT OVERVIEW

PLAN SCALE

50 0 50 100

SCALE IN FEET
1"=100'

REGISTERED PROFESSIONAL ENGINEER
83524PE
Matt Wadlington
OREGON
NOV. 10, 2009
MATTHEW D. WADLINGTON

RENEWS: 06/30/2022

Civil West Engineering Services, Inc.
200 FERRY ST SW
ALBANY, OR 97321
541-223-5130
www.civilwest.com

REV.	DATE	DESCRIPTION	BY

DESIGNED BY: ERM
DRAWN BY: FT
CHECKED BY:
PROJECT NO: 2817-05

CITY OF SWEET HOME
LINN COUNTY, OR

2022 WATERMAIN REPLACEMENT PROGRAM

8TH + ALDER IMPROVEMENTS
OVERVIEW

Sheet No. C8

Date APRIL 2

DATE:5/11/22 FILE:O:\CW_Projects\2817 Sweet Home\2817-005 9th Ave Water Distribution System Improvements Ph2\04 Final Design\Drawings\Dwg\2817-05 DESIGN ALDER.dwg

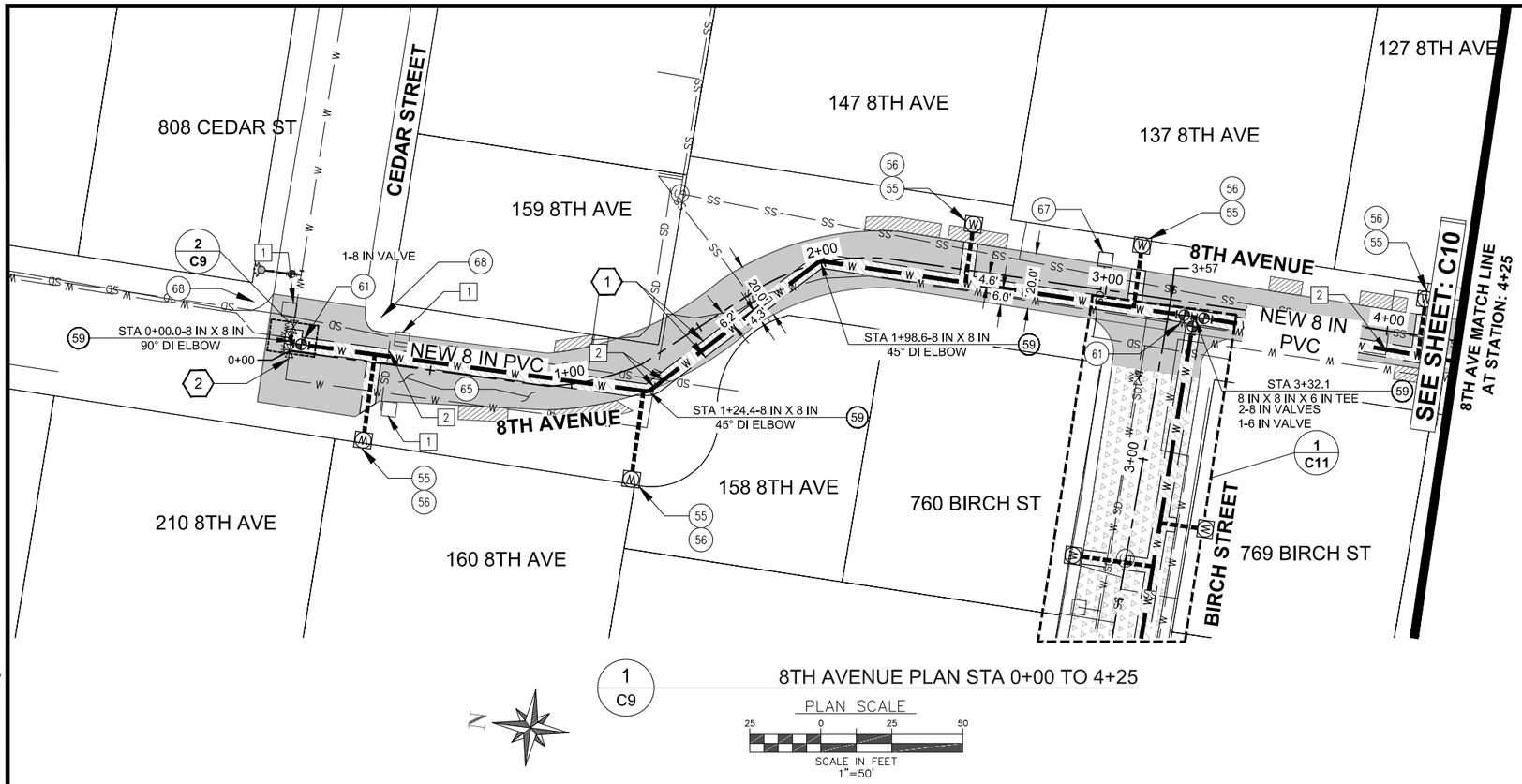

1 / C9 8TH AVENUE PLAN STA 0+00 TO 4+25

PLAN SCALE

SCALE IN FEET
1"=50'

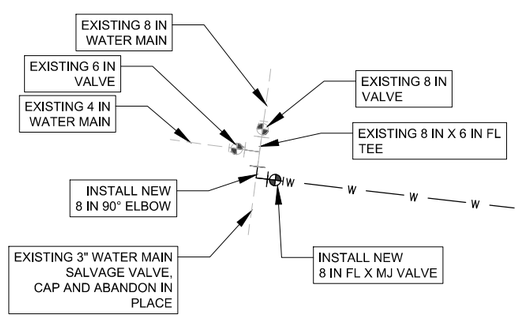

2 / C9 8TH AND CEDAR CONNECTION

SCALE: NTS

DEMOLITION NOTES:

1	SAWCUT AND REMOVE.
2	CAP EXISTING AND ABANDON IN PLACE.

IMPROVEMENT NOTES:

54	INSTALL NEW PVC WATER PIPE (C-900) INCLUDING FITTINGS AND FIXTURES WITH 36 IN COVER MINIMUM. SEE DETAIL, 1/D1
55	INSTALL NEW WATER SERVICE LATERAL. SEE DETAILS, 1/D2
56	INSTALL NEW WATER METER. CITY SHALL PROVIDE METER AND VAULT. SEE DETAILS, 1/D2
59	INSTALL THRUST BLOCKS AND MEGALUGS AT EACH TRANSITIONAL JOINT. SEE DETAIL, 1/D3
61	INSTALL NEW WATER VALVE PER PROJECT SPECIFICATIONS. SEE DETAIL, 1/D4
63	INSTALL NEW FIRE HYDRANT ASSEMBLY AND SERVICE LINE. ALL BEDDING, THRUST BLOCKS, AND FIXTURES SHALL CONFORM TO PROJECT PLANS AND SPECIFICATIONS. SEE DETAIL, 1/D5 1/D3
64	INSTALL BLOW OFF VALVE. SEE DETAIL, 1/D6
65	OVERLAY ASPHALT, MATCH EXISTING. SEE DETAILS, 1/D7 2/D7
66	REPLACE SIDEWALK, CURB AND GUTTER, MATCH EXISTING. SEE DETAIL, 1/D8 1/D9
67	INSTALL CATCH BASIN AND ~25 FT OF 12 IN PVC PIPE, TIE INTO DITCH. SEE DETAIL, 1/D10
68	REMOVE EXISTING PEDESTRIAN RAMP. REPLACE WITH ADA COMPLIANT PEDESTRIAN RAMP

KEYED NOTES:

1	PROTECT IN PLACE. RAISE AS NEEDED.
2	POTHOLE EXISTING PRIOR TO WATERLINE INSTALLATION.

SHEET NOTES:

1. CONTRACTOR SHALL CONTACT "ONE CALL" FOR UTILITY LOCATES PRIOR TO THE START OF ANY EXCAVATION.
2. CONTRACTOR SHALL POTHOLE EXISTING WATERLINE PRIOR TO NEW WATERLINE CONSTRUCTION TO CONFIRM EXISTING WATERLINE DEPTH LOCATION, AND FITTING REQUIREMENTS FOR CONNECTION OF NEW WATERLINE TO EXISTING.
3. TYPICAL BURY FOR NEW WATERLINE SHALL BE 36 IN TO TOP OF PIPE. ADJUST DEPTH OF BURY AS REQUIRED TO MAINTAIN CONSTANT GRADE
4. AFTER COMPLETION OF NEW WATERLINE AND ALL TESTING AND CONNECTIONS HAVE BEEN MADE, DESIGNATED PORTIONS OF EXISTING WATERLINE ARE TO BE ABANDONED IN PLACE. EXISTING VALVES AND BOXES SHALL BE REMOVED IN THEIR ENTIRETY ALONG WITH ANY TEMPORARY SPOOLS AND CONNECTIONS. PROVIDE END CAPS, BLIND FLANGES OR PLUGS AS REQUIRED FOR COMPLETE ABANDONMENT OF DESIGNATED PORTIONS OF EXISTING WATERLINES.

REGISTERED PROFESSIONAL ENGINEER
83524PE
OREGON
NOV. 10, 2009
MATTHEW D. WADLINGTON
RENEWS: 06/30/2022

Civil West Engineering Services, Inc.
541-223-5130
www.civilwest.com
200 FERRY ST SW
ALBANY, OR 97321

REV.	DATE	DESCRIPTION	BY

DESIGNED BY: ERM
DRAWN BY: FT
CHECKED BY: MDW
PROJECT NO: 2817-05

CITY OF SWEET HOME
LINN COUNTY, OR

2022 WATERMAIN REPLACEMENT PROGRAM

8TH ST PLAN STA 0+00 TO 4+25

Sheet No. C9

Date APRIL 2

DATE:5/11/22 FILE:O:\CW_Projects\2817 Sweet Home\2817-005 9th Ave Water Distribution System Improvements Ph2\04 Final Design\Drawings\Dwg\2817-05 DESIGN ALDER.dwg

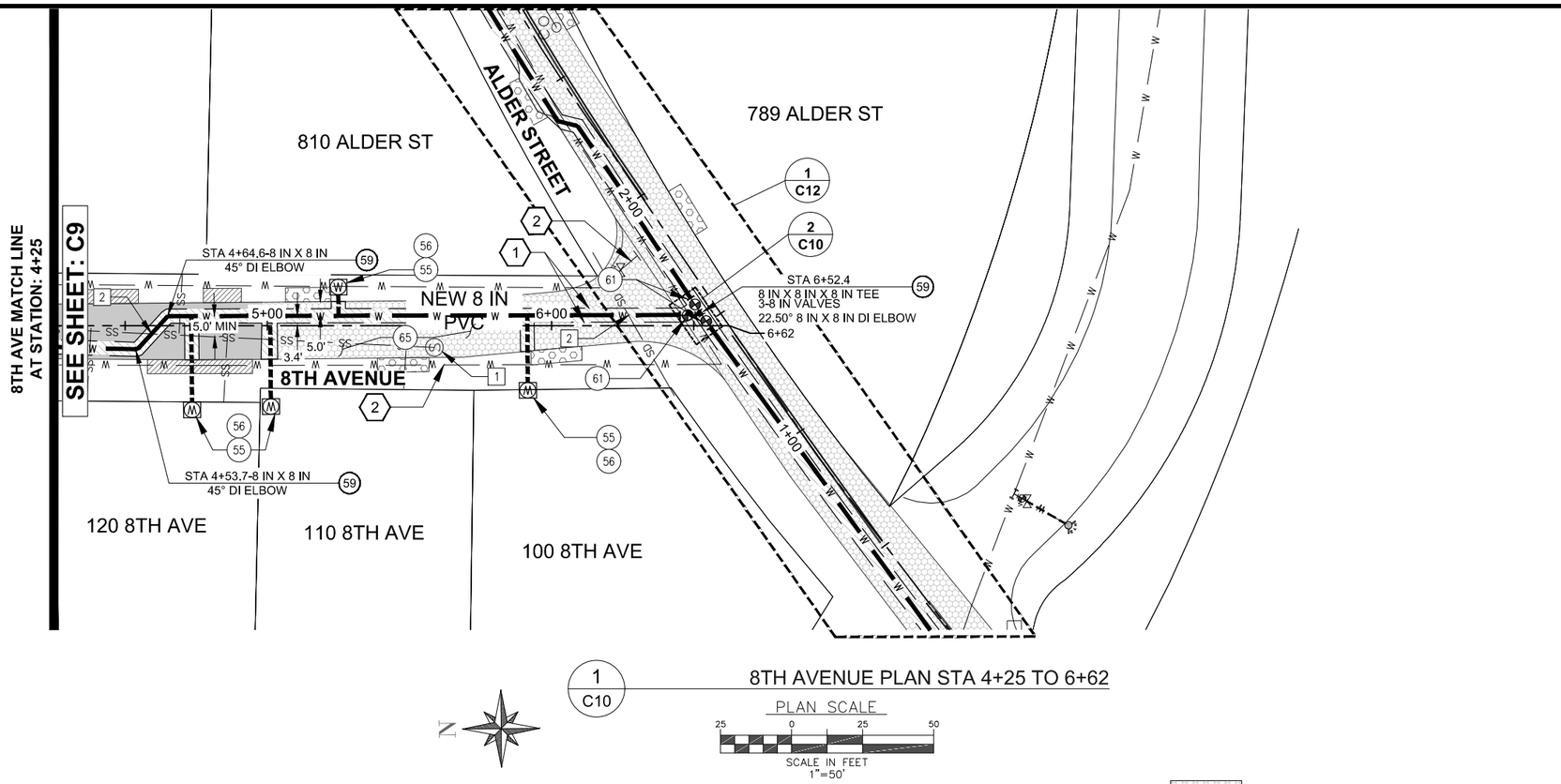

1 C10 8TH AVENUE PLAN STA 4+25 TO 6+62

PLAN SCALE
25 0 25 50
SCALE IN FEET
1"=50'

ADDITIVE ALTERNATE
AC OVERLAY

ADDITIVE ALTERNATE
DRIVEWAY

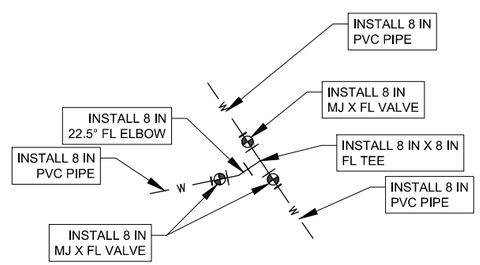

2 C10 8TH AND ALDER CONNECTION

SCALE: NTS

DEMOLITION NOTES:

1	SAWCUT AND REMOVE.
2	CAP EXISTING AND ABANDON IN PLACE.

IMPROVEMENT NOTES:

54	INSTALL NEW PVC WATER PIPE (C-900) INCLUDING FITTINGS AND FIXTURES WITH 36 IN COVER MINIMUM. SEE DETAIL, 1/D1
55	INSTALL NEW WATER SERVICE LATERAL. SEE DETAILS, 1/D2
56	INSTALL NEW WATER METER. CITY SHALL PROVIDE METER AND VAULT. SEE DETAILS, 1/D2
59	INSTALL THRUST BLOCKS AND MEGALUGS AT EACH TRANSITIONAL JOINT. SEE DETAIL, 1/D3
61	INSTALL NEW WATER VALVE PER PROJECT SPECIFICATIONS. SEE DETAIL, 1/D4
63	INSTALL NEW FIRE HYDRANT ASSEMBLY AND SERVICE LINE. ALL BEDDING, THRUST BLOCKS, AND FIXTURES SHALL CONFORM TO PROJECT PLANS AND SPECIFICATIONS. SEE DETAIL, 1/D5 1/D3
64	INSTALL BLOW OFF VALVE. SEE DETAIL, 1/D6
65	OVERLAY ASPHALT, MATCH EXISTING. SEE DETAILS, 1/D7 2/D7
66	REPLACE SIDEWALK, CURB AND GUTTER, MATCH EXISTING. SEE DETAIL, 1/D8 1/D9
67	INSTALL CATCH BASIN AND ~25 FT OF 12 IN PVC PIPE, TIE INTO DITCH. SEE DETAIL, 1/D10
68	REMOVE EXISTING PEDESTRIAN RAMP. REPLACE WITH ADA COMPLIANT PEDESTRIAN RAMP

KEYED NOTES:

1	PROTECT IN PLACE. RAISE AS NEEDED.
2	POTHOLE EXISTING PRIOR TO WATERLINE INSTALLATION.

SHEET NOTES:

1. CONTRACTOR SHALL CONTACT "ONE CALL" FOR UTILITY LOCATES PRIOR TO THE START OF ANY EXCAVATION.
2. CONTRACTOR SHALL POTHOLE EXISTING WATERLINE PRIOR TO NEW WATERLINE CONSTRUCTION TO CONFIRM EXISTING WATERLINE DEPTH LOCATION, AND FITTING REQUIREMENTS FOR CONNECTION OF NEW WATERLINE TO EXISTING.
3. TYPICAL BURY FOR NEW WATERLINE SHALL BE 36 IN TO TOP OF PIPE. ADJUST DEPTH OF BURY AS REQUIRED TO MAINTAIN CONSTANT GRADE
4. AFTER COMPLETION OF NEW WATERLINE AND ALL TESTING AND CONNECTIONS HAVE BEEN MADE, DESIGNATED PORTIONS OF EXISTING WATERLINE ARE TO BE ABANDONED IN PLACE. EXISTING VALVES AND BOXES SHALL BE REMOVED IN THEIR ENTIRETY ALONG WITH ANY TEMPORARY SPOOLS AND CONNECTIONS. PROVIDE END CAPS, BLIND FLANGES OR PLUGS AS REQUIRED FOR COMPLETE ABANDONMENT OF DESIGNATED PORTIONS OF EXISTING WATERLINES.

REGISTERED PROFESSIONAL ENGINEER
83524PE
OREGON
NOV. 10, 2009
MATTHEW D. WADLINGTON
RENEWS: 06/30/2022

Civil West Engineering Services, Inc.
541-223-5130
www.civilwest.com
200 FERRY ST SW
ALBANY, OR 97321

REV.	DATE	DESCRIPTION	BY

DESIGNED BY: ERM
DRAWN BY: FT
CHECKED BY: MDW
PROJECT NO: 2817-05

CITY OF SWEET HOME
LINN COUNTY, OR

2022 WATERMAIN REPLACEMENT PROGRAM

8TH ST PLAN STA 4+25 TO 6+62

Sheet No. C10

Date APRIL 2

DATE:5/11/22 FILE:O:\CW_Projects\2817 Sweet Home\2817-005 9th Ave Water Distribution System Improvements Ph2\04 Final Design\Drawings\Dwg\2817-05 DESIGN ALDER.dwg

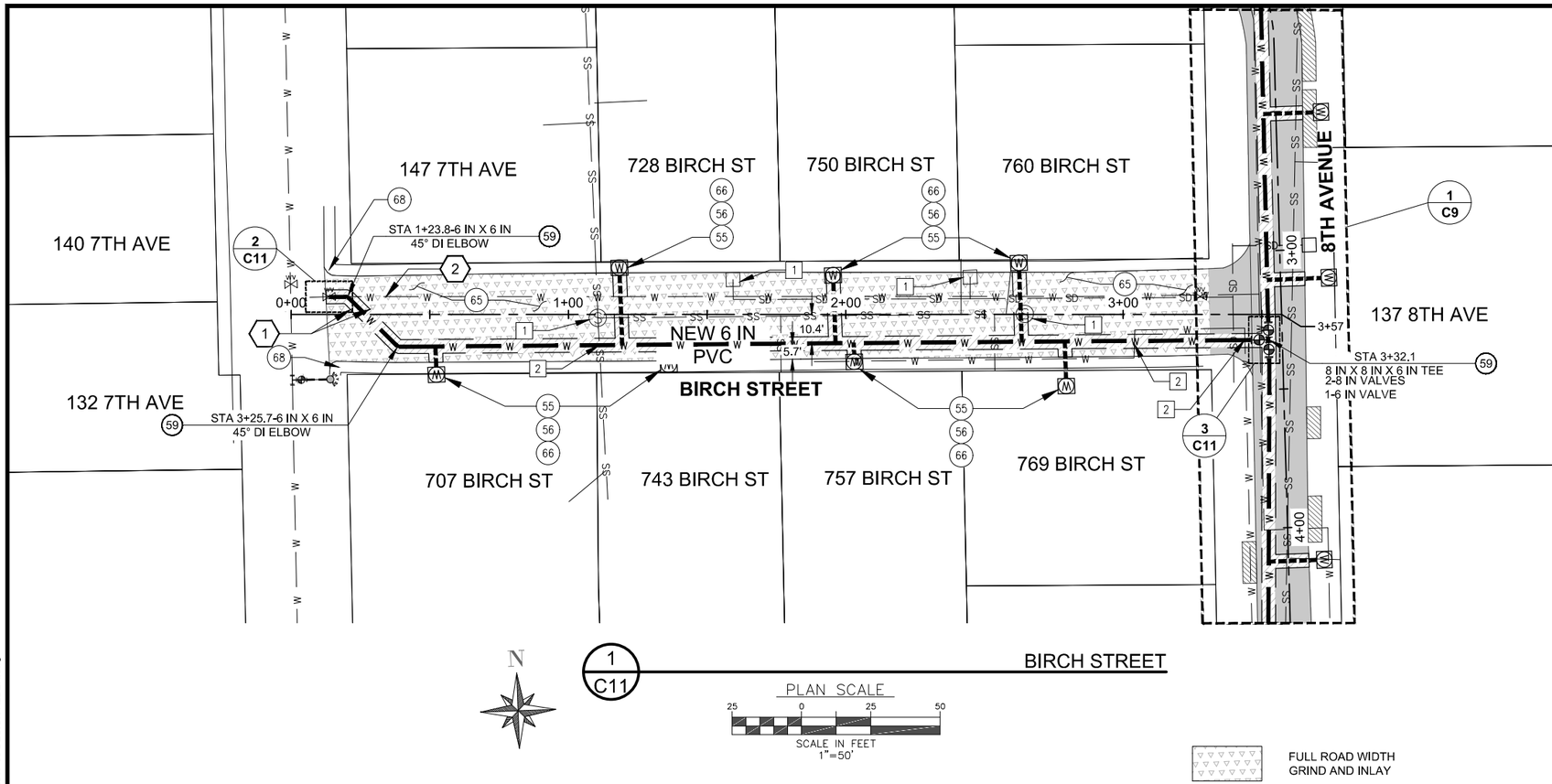

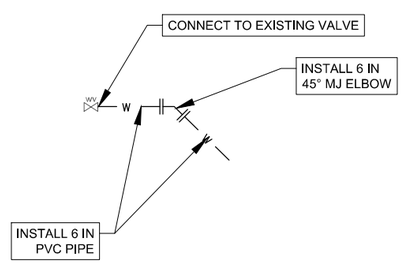

2 C11 BIRCH AND 7TH CONNECTION
SCALE: NTS

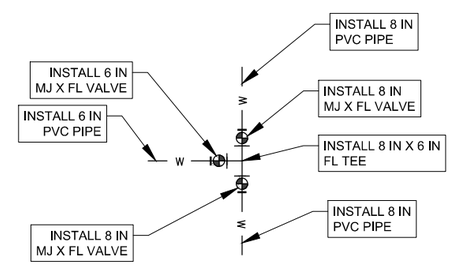

3 C11 BIRCH AND 8TH CONNECTION
SCALE: NTS

DEMOLITION NOTES:

1	SAWCUT AND REMOVE.
2	CAP EXISTING AND ABANDON IN PLACE.

IMPROVEMENT NOTES:

54	INSTALL NEW PVC WATER PIPE (C-900) INCLUDING FITTINGS AND FIXTURES WITH 36 IN COVER MINIMUM. SEE DETAIL, 1/D1
55	INSTALL NEW WATER SERVICE LATERAL. SEE DETAILS, 1/D2
56	INSTALL NEW WATER METER. CITY SHALL PROVIDE METER AND VAULT. SEE DETAILS, 1/D2
59	INSTALL THRUST BLOCKS AND MEGALUGS AT EACH TRANSITIONAL JOINT. SEE DETAIL, 1/D3
61	INSTALL NEW WATER VALVE PER PROJECT SPECIFICATIONS. SEE DETAIL, 1/D4
63	INSTALL NEW FIRE HYDRANT ASSEMBLY AND SERVICE LINE. ALL BEDDING, THRUST BLOCKS, AND FIXTURES SHALL CONFORM TO PROJECT PLANS AND SPECIFICATIONS. SEE DETAIL, 1/D5 1/D3
64	INSTALL BLOW OFF VALVE. SEE DETAIL, 1/D6
65	OVERLAY ASPHALT, MATCH EXISTING. SEE DETAILS, 1/D7 2/D7
66	REPLACE SIDEWALK, CURB AND GUTTER, MATCH EXISTING. SEE DETAIL, 1/D8 1/D9
67	INSTALL CATCH BASIN AND ~25 FT OF 12 IN PVC PIPE, TIE INTO DITCH. SEE DETAIL, 1/D10
68	REMOVE EXISTING PEDESTRIAN RAMP. REPLACE WITH ADA COMPLIANT PEDESTRIAN RAMP

KEYED NOTES:

1	PROTECT IN PLACE. RAISE AS NEEDED.
2	POTHOLE EXISTING PRIOR TO WATERLINE INSTALLATION.

SHEET NOTES:

1. CONTRACTOR SHALL CONTACT "ONE CALL" FOR UTILITY LOCATES PRIOR TO THE START OF ANY EXCAVATION.
2. CONTRACTOR SHALL POTHOLE EXISTING WATERLINE PRIOR TO NEW WATERLINE CONSTRUCTION TO CONFIRM EXISTING WATERLINE DEPTH LOCATION, AND FITTING REQUIREMENTS FOR CONNECTION OF NEW WATERLINE TO EXISTING.
3. TYPICAL BURY FOR NEW WATERLINE SHALL BE 36 IN TO TOP OF PIPE. ADJUST DEPTH OF BURY AS REQUIRED TO MAINTAIN CONSTANT GRADE
4. AFTER COMPLETION OF NEW WATERLINE AND ALL TESTING AND CONNECTIONS HAVE BEEN MADE, DESIGNATED PORTIONS OF EXISTING WATERLINE ARE TO BE ABANDONED IN PLACE. EXISTING VALVES AND BOXES SHALL BE REMOVED IN THEIR ENTIRETY ALONG WITH ANY TEMPORARY SPOOLS AND CONNECTIONS. PROVIDE END CAPS, BLIND FLANGES OR PLUGS AS REQUIRED FOR COMPLETE ABANDONMENT OF DESIGNATED PORTIONS OF EXISTING WATERLINES.

REGISTERED PROFESSIONAL ENGINEER
83524PE
OREGON
NOV. 10, 2009
MATTHEW D. WADLINGTON
RENEWS: 06/30/2022

Civil West Engineering Services, Inc.
541-223-5130
www.civilwest.com
200 FERRY ST SW
ALBANY, OR 97321

REV.	DATE	DESCRIPTION	BY

DESIGNED BY: ERM
DRAWN BY: FT
CHECKED BY: MDW
PROJECT NO: 2817-05

CITY OF SWEET HOME
LINN COUNTY, OR

2022 WATERMAIN REPLACEMENT PROGRAM

BIRCH STREET

Sheet No. C11
Date APRIL 2

DATE:5/11/22 FILE:O:\CW_Projects\2817 Sweet Home\2817-005 9th Ave Water Distribution System Improvements Ph2\04 Final Design\Drawings\Dwg\2817-05 DESIGN ALDER.dwg

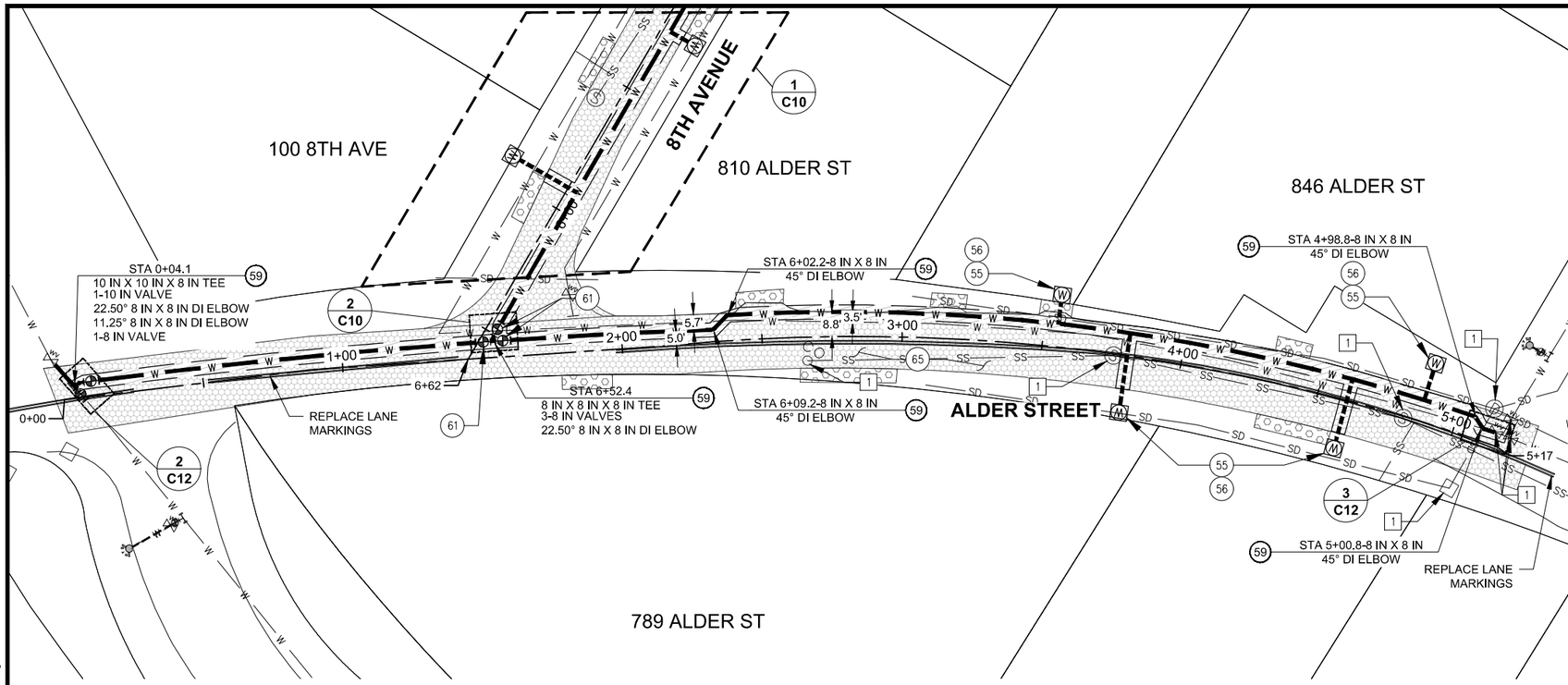

1 C12 ALDER STREET

PLAN SCALE

25 0 25 50

SCALE IN FEET
1"=50'

ADDITIVE ALTERNATE AC OVERLAY

ADDITIVE ALTERNATE DRIVEWAY

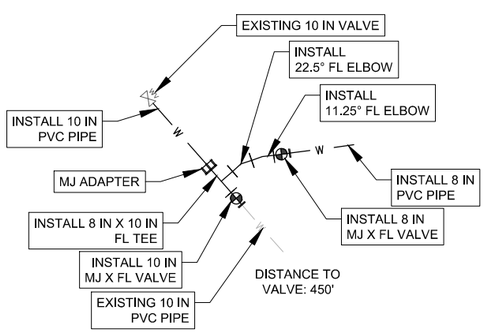

2 C12 ALDER CONNECTION

SCALE: NTS

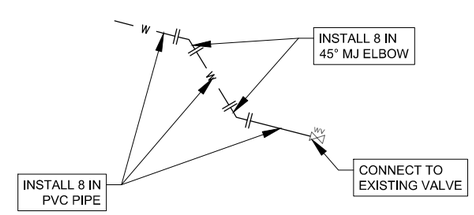

3 C12 ALDER AND 9TH CONNECTION

SCALE: NTS

DEMOLITION NOTES:

1	SAWCUT AND REMOVE.
2	CAP EXISTING AND ABANDON IN PLACE.

IMPROVEMENT NOTES:

54	INSTALL NEW PVC WATER PIPE (C-900) INCLUDING FITTINGS AND FIXTURES WITH 36 IN COVER MINIMUM. SEE DETAIL, 1/D1
55	INSTALL NEW WATER SERVICE LATERAL. SEE DETAILS, 1/D2
56	INSTALL NEW WATER METER. CITY SHALL PROVIDE METER AND VAULT. SEE DETAILS, 1/D2
59	INSTALL THRUST BLOCKS AND MEGALUGS AT EACH TRANSITIONAL JOINT. SEE DETAIL, 1/D3
61	INSTALL NEW WATER VALVE PER PROJECT SPECIFICATIONS. SEE DETAIL, 1/D4
63	INSTALL NEW FIRE HYDRANT ASSEMBLY AND SERVICE LINE. ALL BEDDING, THRUST BLOCKS, AND FIXTURES SHALL CONFORM TO PROJECT PLANS AND SPECIFICATIONS. SEE DETAIL, 1/D5 1/D3
64	INSTALL BLOW OFF VALVE. SEE DETAIL, 1/D6
65	OVERLAY ASPHALT, MATCH EXISTING. SEE DETAILS, 1/D7 2/D7
66	REPLACE SIDEWALK, CURB AND GUTTER, MATCH EXISTING. SEE DETAIL, 1/D8 1/D9
67	INSTALL CATCH BASIN AND ~25 FT OF 12 IN PVC PIPE, TIE INTO DITCH. SEE DETAIL, 1/D10
68	REMOVE EXISTING PEDESTRIAN RAMP. REPLACE WITH ADA COMPLIANT PEDESTRIAN RAMP

KEYED NOTES:

1	PROTECT IN PLACE. RAISE AS NEEDED.
2	POTHOLE EXISTING PRIOR TO WATERLINE INSTALLATION.

SHEET NOTES:

1. CONTRACTOR SHALL CONTACT "ONE CALL" FOR UTILITY LOCATES PRIOR TO THE START OF ANY EXCAVATION.
2. CONTRACTOR SHALL POTHOLE EXISTING WATERLINE PRIOR TO NEW WATERLINE CONSTRUCTION TO CONFIRM EXISTING WATERLINE DEPTH LOCATION, AND FITTING REQUIREMENTS FOR CONNECTION OF NEW WATERLINE TO EXISTING.
3. TYPICAL BURY FOR NEW WATERLINE SHALL BE 36 IN TO TOP OF PIPE. ADJUST DEPTH OF BURY AS REQUIRED TO MAINTAIN CONSTANT GRADE
4. AFTER COMPLETION OF NEW WATERLINE AND ALL TESTING AND CONNECTIONS HAVE BEEN MADE, DESIGNATED PORTIONS OF EXISTING WATERLINE ARE TO BE ABANDONED IN PLACE. EXISTING VALVES AND BOXES SHALL BE REMOVED IN THEIR ENTIRETY ALONG WITH ANY TEMPORARY SPOOLS AND CONNECTIONS. PROVIDE END CAPS, BLIND FLANGES OR PLUGS AS REQUIRED FOR COMPLETE ABANDONMENT OF DESIGNATED PORTIONS OF EXISTING WATERLINES.

REGISTERED PROFESSIONAL ENGINEER
83524PE
OREGON
NOV. 10, 2009
MATTHEW D. WADLINGTON
RENEWS: 06/30/2022

Civil West Engineering Services, Inc.
541-223-5130
www.civilwest.com
200 FERRY ST SW
ALBANY, OR 97321

REV.	DATE	DESCRIPTION	BY

DESIGNED BY: ERM
DRAWN BY: FT
CHECKED BY: MDW
PROJECT NO: 2817-05

CITY OF SWEET HOME
LINN COUNTY, OR

2022 WATERMAIN REPLACEMENT PROGRAM

ALDER STREET

Sheet No. C12

Date APRIL 2

DATE:5/11/22 FILE:O:\CW_Projects\2817 Sweet Home\2817-005 9th Ave Water Distribution System Improvements Ph2\04 Final Design\Drawings\Dwg\2817-05 DESIGN ALDER.dwg

rd300.dgn 20-JUL-2020

TABLE A

"A" (in)	"B" (in)	"C" (in)	"D" (in)
4	10	4	8
6	10	4	8
8	10	6	10
10	10	6	10
12	12	6	10
15	12	6	10
18	16	6	12
21	16	6	12
24	18	6	12
30	18	6	12
36	24	6	14
42	24	6	14
48	24	6	14
54	24	6	14
60	24	6	14
66	24	6	14
72	24	6	14

For pipes over 72" diameter, see general note 3.

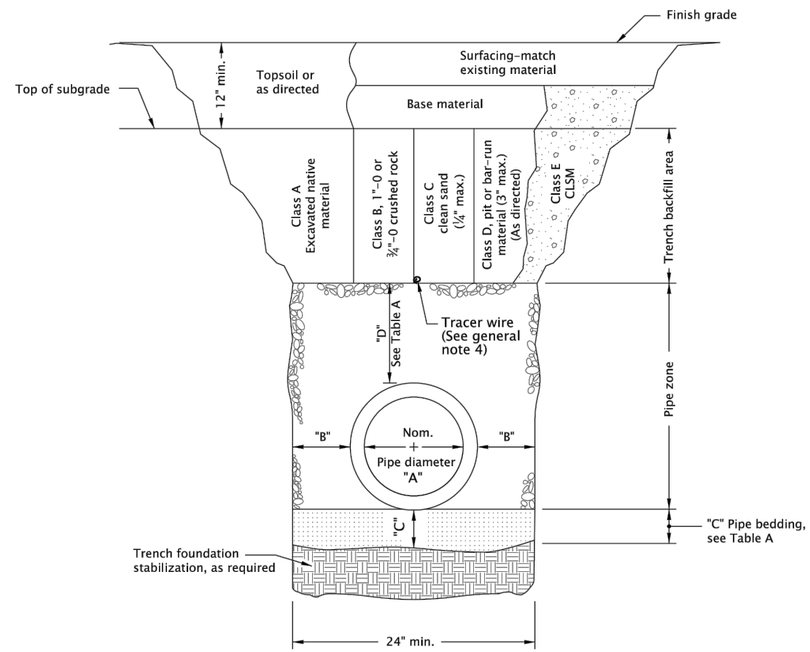

MULTIPLE INSTALLATIONS

DIAMETER	MIN. SPACE BETWEEN PIPES
Up to 48"	24"
48" to 72"	One half (½) dia. of pipe

GENERAL NOTES FOR ALL DETAILS ON THIS SHEET:

1. Surfacing of paved areas shall comply with street cut Std. Dwg. RD302.
2. For pipe installation in embankment areas where the trench method will not be used and the pipe is ≥ 36" diameter, increase dimension "B" to nominal pipe diameter.
3. Pipes over 72" diameter are structures, and are not applicable to this drawing.
4. See Std. Dwg. RD336 for tracer wire details (When required).

CALC. BOOK NO. N/A

SDR DATE 14-JUL-2014

NOTE: All material and workmanship shall be in accordance with the current Oregon Standard Specifications

The selection and use of this Standard Drawing, while designed in accordance with generally accepted engineering principles and practices, is the sole responsibility of the user and should not be used without consulting a Registered Professional Engineer.

OREGON STANDARD DRAWINGS

TRENCH BACKFILL, BEDDING, PIPE ZONE AND MULTIPLE INSTALLATIONS

2021

DATE	REVISION DESCRIPTION

RD300

Effective Date: June 1, 2021 - November 30, 2021

RD300

1 / D1 WATER MAIN TRENCH AND BACKFILL DETAIL
NOT TO SCALE

REGISTERED PROFESSIONAL ENGINEER 83524PE OREGON NOV. 10, 2009 MATTHEW D. WADLINGTON
RENEWS: 06/30/2022

Civil West Engineering Services, Inc.
541-223-5130
www.civilwest.com
200 FERRY ST SW
ALBANY, OR 97321

REV.	DATE	DESCRIPTION	BY

DESIGNED BY: ERM DRAWN BY: FT CHECKED BY: MDW
PROJECT NO: 2817-005

CITY OF SWEET HOME
LINN COUNTY, OR

2022 WATERMAIN REPLACEMENT PROGRAM

WATER MAIN TRENCH AND BACKFILL DETAIL

Sheet No. D1
Date APRIL 2

DATE:5/11/22 FILE:O:\CW_Projects\2817 Sweet Home\2817-005 9th Ave Water Distribution System Improvements Ph2\04 Final Design\Drawings\Dwg\2817-05-Details.dwg

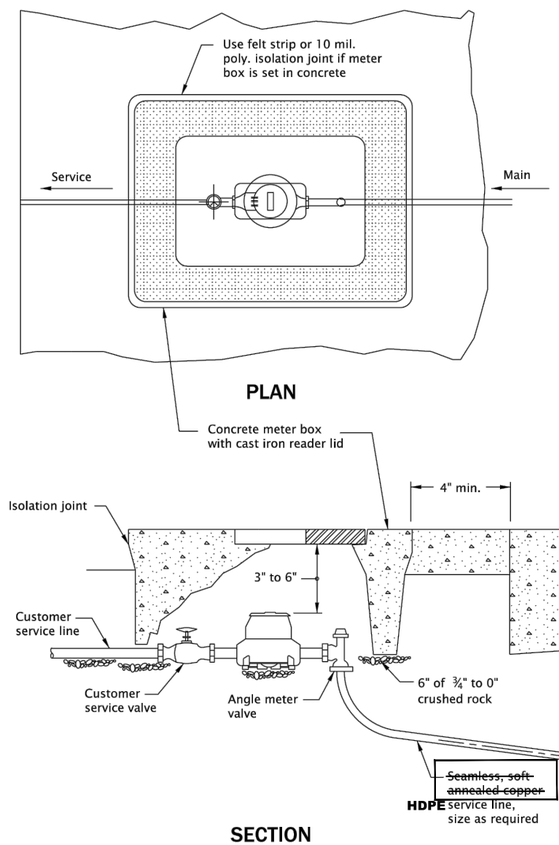

NOTES:

1. ONLY NEW METER BOX WILL BE INSTALLED AS PART OF CONSTRUCTION. METER TO BE INSTALLED BY THE CITY OF SWEET HOME.
2. METER BOX PART NO. DFW486WBC4-12-BODY. LID PART NO. DFW486C-4M-NHK-LID

GENERAL NOTES FOR ALL DETAILS ON THIS SHEET:

1. Meter to be centered and set plumb inside meter box.
2. Manufactured meter setter may be used for ¾" to 2" services.
3. Set meter box 4" minimum behind curb or sidewalk.
4. Meter boxes set in driveways shall have traffic lids.
5. See project plans for meter box size.
6. See project plans for details not shown.

CALC. BOOK NO. N/A

SDR DATE 25-JUL-2017

NOTE: All material and workmanship shall be in accordance with the current Oregon Standard Specifications

The selection and use of this Standard Drawing, while designed in accordance with generally accepted engineering principles and practices, is the sole responsibility of the user and should not be used without consulting a Registered Professional Engineer.

OREGON STANDARD DRAWINGS

¾" TO 2"
WATER SERVICE CONNECTION

2021

DATE	REVISION DESCRIPTION

RD274

Effective Date: June 1, 2021 - November 30, 2021

1 / D2 WATER SERVICE CONNECTION
NOT TO SCALE

rd274.dgn 20-JUL-2020

RD274

REGISTERED PROFESSIONAL ENGINEER
83524PE
OREGON
NOV. 10, 2009
MATTHEW D. WADLINGTON
RENEWS: 06/30/2022

Civil West Engineering Services, Inc.
541-223-5130
www.civilwest.com
200 FERRY ST SW
ALBANY, OR 97321

REV.	DATE	DESCRIPTION	BY

DESIGNED BY: ERM
DRAWN BY: FT
CHECKED BY: MDW
PROJECT NO: 2817-005

CITY OF SWEET HOME
LINN COUNTY, OR

2022 WATERMAIN REPLACEMENT PROGRAM

WATER SERVICE CONNECTION DETAIL

Sheet No. D2
Date APRIL 2

DATE:5/11/22 FILE:O:\CW_Projects\2817 Sweet Home\2817-005 9th Ave Water Distribution System Improvements Ph2\04 Final Design\Drawings\Dwg\2817-005-Details.dwg

THRUST BLOCKING

TABLE A

CONCRETE THRUST BLOCKING (HORIZONTAL)

		Thrust (T) at fittings in Pounds				
		A	B	C	D	E
PIPE DIA.	Table Pressure PSI	Tee & Dead Ends	90 deg Bend	45 deg Bend	22.5 deg Bend	11.25 deg Bend
4"	250	3035	4320	2315	1215	610
6"	250	6860	9735	5215	2720	1375
8"	250	12185	17310	9265	4835	2430
10"	250	19045	27045	14480	7560	3800
12"	250	27405	38940	20840	10880	5465
14"	250	37320	53010	28370	14815	7445
16"	250	48740	69245	37050	19360	9735

TABLE B

Soil Type	Soil Bearing Capacity (B) in PSF
Muck, peat, etc.	0
Soft Clay	1000
Sand	2000
Sand and gravel	3000
Sand and gravel cemented with clay	4000
Hard shale	10,000

TABLE C

CONCRETE BLOCKING FOR CONVEX VERTICAL BENDS

DIMENSION TABLE

PIPE DIA. in.	Table Pressure PSI	Bend Angle (deg)	Concrete Volume (cy)	Cube Size (ft)	Stirrup Dia. (in)	Stirrup Embmt. (in)	Stirrup Bar #
4"	250	11.25	0.21	1.8	⅝	17	5
		22.5	0.43	2.3			
		45	0.77	2.8			
6"	250	11.25	0.48	2.4	⅝	17	5
		22.5	0.95	3.0			
		45	1.79	3.6			
8"	250	11.25	0.86	2.9	⅝	17	5
		22.5	1.65	3.5			
		45	3.22	4.4			
10"	250	11.25	1.39	3.3	⅝	17	5
		22.5	2.62	4.1			
		45	4.97	4.1			
12"	250	11.25	1.94	3.7	⅝	17	5
		22.5	3.91	4.7			
		45	6.89	5.7	⅞	24	7
14"	250	11.25	2.62	4.1	⅝	17	5
		22.5	5.26	5.2	¾	20	6
		45	9.70	6.4	1	27	8
16"	250	11.25	3.44	4.5	⅝	17	5
		22.5	6.89	5.7	⅞	24	7
		45	12.63	7.0	1⅛	30	9

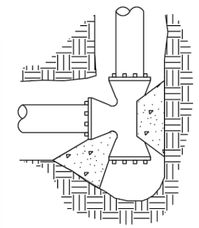

TEE

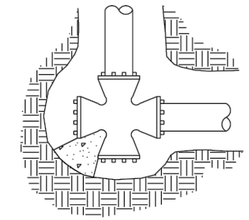

CROSS

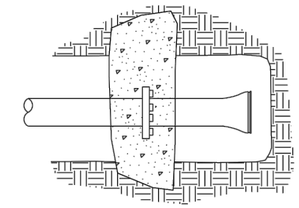

STRADDLE

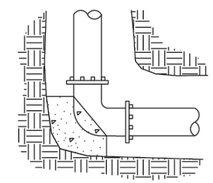

BEND

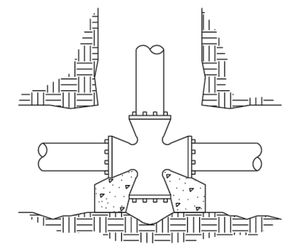

CROSS

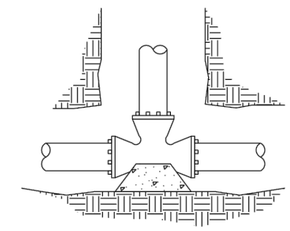

TEE

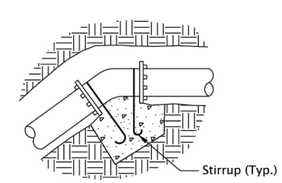

CONVEX VERTICAL BEND
(See Table C)

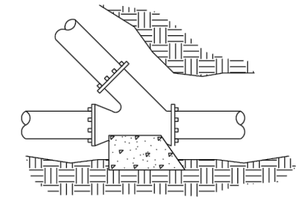

WYE

THRUST BLOCK BEARING AREA EQUATION

NOTE: WHEN THRUST BLOCK BEARING AREA IS NOT SPECIFIED ON THE PLANS OR DETERMINED BY THE ENGINEER, USE THE FOLLOWING PROCEDURE TO DETERMINE REQUIRED BEARING AREA.

1. Determine thrust (T) for type of fitting or joint and size of pipe from Table A.
2. Determine Design (Test) Pressure from Standard Specifications or Special Provisions.
3. Determine Table Pressure from Table A.
4. Determine Soil Bearing Capacity (B) of soil from Table B.
5. Determine required bearing area (A) in sq. ft. as follows:

$$\text{Thrust Block Bearing Area} = A = \left(\frac{T}{B}\right)\left(\frac{\text{Design (Test) Pressure}}{\text{Table Pressure}}\right)$$

Example: Design (Test) Pressure = 150 PSI
Pipe = 14"
Fitting = Tee
Soil = Sand

From Table A, T = 37320
From Table B, B = 2000

$$A = \left(\frac{37320}{2000}\right)\left(\frac{150}{250}\right) = 11.2 \text{ sq.ft.}$$

GENERAL NOTES FOR ALL DETAILS ON THIS SHEET:

1. Contractor to provide blocking adequate to withstand full test pressure.
2. Pour concrete blocking against undisturbed earth.
3. All concrete shall be commercial grade concrete.
4. Wrap pipe and/or fittings with 2 layers of polyethylene film where in contact with concrete
5. Keep concrete clear of all joints and accessories.
6. Stirrups shall be deformed galvanized cold rolled steel AASHTO M31 (ASTM A615), Grade 60. Coat with coal tar epoxy after installation.
7. See project plans for details not shown.

CALC. BOOK NO. N/A

SDR DATE 25-JUL-2017

NOTE: All material and workmanship shall be in accordance with the current Oregon Standard Specifications

The selection and use of this Standard Drawing, while designed in accordance with generally accepted engineering principles and practices, is the sole responsibility of the user and should not be used without consulting a Registered Professional Engineer.

OREGON STANDARD DRAWINGS

THRUST BLOCKING

2021

DATE	REVISION DESCRIPTION

RD250

Effective Date: June 1, 2021 - November 30, 2021

RD250

1
D3

THRUST BLOCK DETAIL
NOT TO SCALE

REGISTERED PROFESSIONAL ENGINEER
83524PE
OREGON
NOV. 10, 2009
MATTHEW D. WADLINGTON
RENEWS: 06/30/2022

Civil West Engineering Services, Inc.
541-223-5130
www.civilwest.com
200 FERRY ST SW
ALBANY, OR 97321

REV.	DATE	DESCRIPTION	BY

DESIGNED BY: ERM
DRAWN BY: FT
CHECKED BY: MDW
PROJECT NO: 2817-005

CITY OF SWEET HOME
LINN COUNTY, OR

2022 WATERMAIN REPLACEMENT PROGRAM

THRUST BLOCK DETAIL

Sheet No. D3

Date APRIL 2

20-JUL-2020

rd250.dgn

DATE:5/11/22 FILE:O:\CW_Projects\2817 Sweet Home\2817-005 9th Ave Water Distribution System Improvements Ph2\04 Final Design\Drawings\Dwg\2817-05-Details.dwg

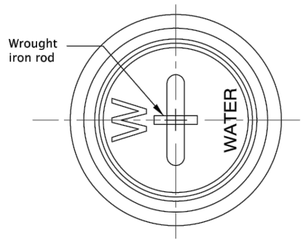

COVER PLAN

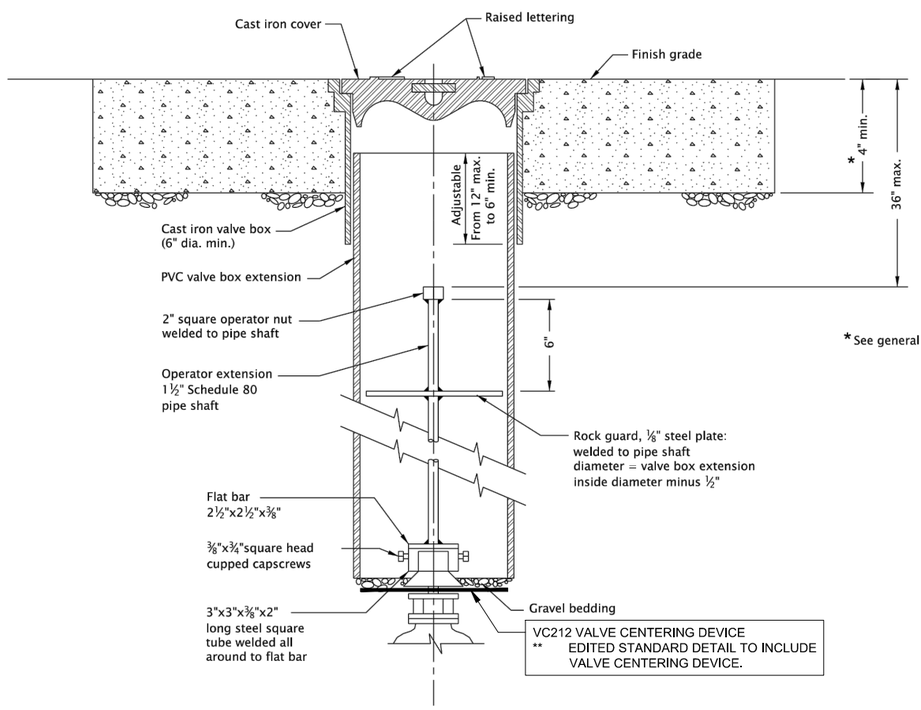

VALVE BOX EXTENSION SECTION

* See general note 8

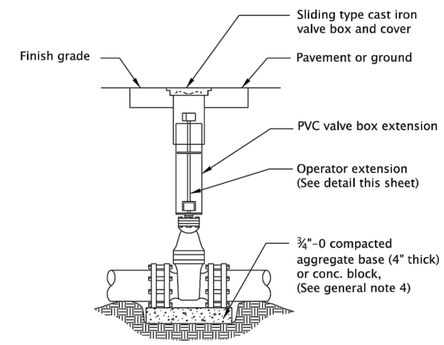

VALVE BOX ASSEMBLY DETAIL

GENERAL NOTES FOR ALL DETAILS ON THIS SHEET:

1. Valve box not to rest on operating assembly.
2. Operator extension required when valve nut is deeper than 4' from finish grade.
3. Center valve box on axis of operator nut.
4. Valves 12" and smaller shall be provided with compacted aggr. base on undisturbed ground. Valves greater than 12" shall be installed on precast concrete block, (4" thick).
5. Welds shall be minimum ¼" all around.
6. Hot dip galvanize operator extension after fabrication.
7. Casting shall meet H20 load requirement.
8. Provide concrete or asphalt pad (24" square, 4" thick), when required.
9. See project plans for details not shown.

CALC. BOOK NO. N/A

SDR DATE 25-JUL-2017

NOTE: All material and workmanship shall be in accordance with the current Oregon Standard Specifications

The selection and use of this Standard Drawing, while designed in accordance with generally accepted engineering principles and practices, is the sole responsibility of the user and should not be used without consulting a Registered Professional Engineer.

OREGON STANDARD DRAWINGS

VALVE BOX AND OPERATOR EXTENSION ASSEMBLY

2021

DATE	REVISION DESCRIPTION

RD258

Effective Date: June 1, 2021 - November 30, 2021

rd258.dgn 20-JUL-2020

RD258

1 / D4 VAVLE BOX DETAIL
NOT TO SCALE

REGISTERED PROFESSIONAL ENGINEER
83524PE
Matt Wadlington
OREGON
NOV. 10, 2009
MATTHEW D. WADLINGTON
RENEWS: 06/30/2022

Civil West Engineering Services, Inc.
541-223-5130
www.civilwest.com
200 FERRY ST SW
ALBANY, OR 97321

REV.	DATE	DESCRIPTION	BY

DESIGNED BY: ERM
DRAWN BY: FT
CHECKED BY: MDW
PROJECT NO: 2817-005

CITY OF SWEET HOME
LINN COUNTY, OR

2022 WATERMAIN REPLACEMENT PROGRAM

VALVE BOX DETAIL

Sheet No. D4

Date APRIL 2

DATE:5/11/22 FILE:O:\CW_Projects\2817 Sweet Home\2817-005 9th Ave Water Distribution System Improvements Ph2\04 Final Design\Drawings\Dwg\2817-05-Details.dwg

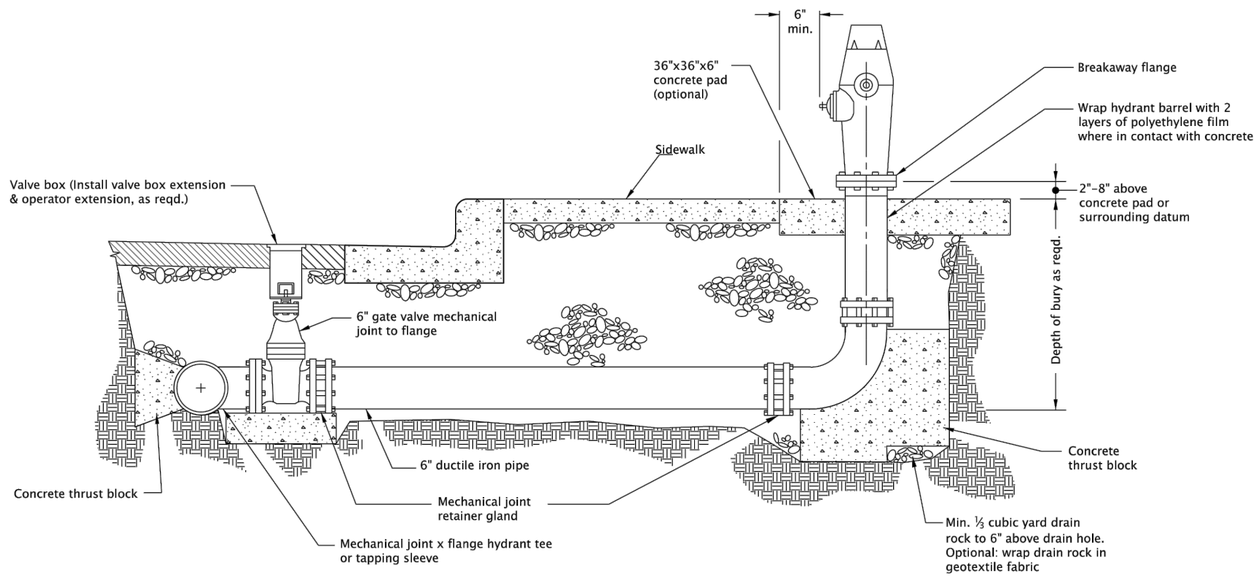

HYDRANT ASSEMBLY

GENERAL NOTES FOR ALL DETAILS ON THIS SHEET:

1. When pipe is shorter than 18', no joints allowed. Use mechanical joint retainer glands. Two ¾" galvanized tie rods may be used in lieu of thrust blocks for installations less than 18' long. Coat tie rods with two coats of coal tar epoxy.
2. When pipe is longer that 18' retainer glands not required.
3. There shall be a minimum of 18" horizontal clearance around hydrant.
4. When placed adjacent to curb, hydrant port shall be 24" from face of curb.
5. Concrete thrust blocks shall be constructed as per thrust blocking Std. Dwg. RD250. Do not block drain holes.
6. Extensions required for hydrant systems shall be installed to the manufacturer's specifications.
7. Hydrants shall be placed to provide a minimum of 5' clearance from driveways, poles, and other obstructions.
8. Hydrant pumper port shall face direction of access.
9. Set hydrant plumb in all directions.
10. See project plans for details not shown.

CALC. BOOK NO. N/A

SDR DATE 25-JUL-2017

The selection and use of this Standard Drawing, while designed in accordance with generally accepted engineering principles and practices, is the sole responsibility of the user and should not be used without consulting a Registered Professional Engineer.

NOTE: All material and workmanship shall be in accordance with the current Oregon Standard Specifications

OREGON STANDARD DRAWINGS

HYDRANT INSTALLATION

2021

DATE	REVISION DESCRIPTION

RD254

Effective Date: June 1, 2021 - November 30, 2021

RD254

1 / D5 FIRE HYDRANT ASSEMBLY DETAIL
NOT TO SCALE

rd254.dgn 20-JUL-2020

REGISTERED PROFESSIONAL ENGINEER 83524PE OREGON NOV. 10, 2009 MATTHEW D. WADLINGTON
RENEWS: 06/30/2022

Civil West Engineering Services, Inc.
200 FERRY ST SW
ALBANY, OR 97321
541-223-5130
www.civilwest.com

REV.	DATE	DESCRIPTION	BY

DESIGNED BY: ERM DRAWN BY: FT CHECKED BY: MDW
PROJECT NO: 2817-005

CITY OF SWEET HOME
LINN COUNTY, OR

2022 WATERMAIN REPLACEMENT PROGRAM

FIRE HYDRANT ASSEMBLY DETAIL

Sheet No. D5
Date APRIL 2

DATE:5/11/22 FILE:O:\CW_Projects\2817 Sweet Home\2817-005 9th Ave Water Distribution System Improvements Ph2\04 Final Design\Drawings\Dwg\2817-05-Details.dwg

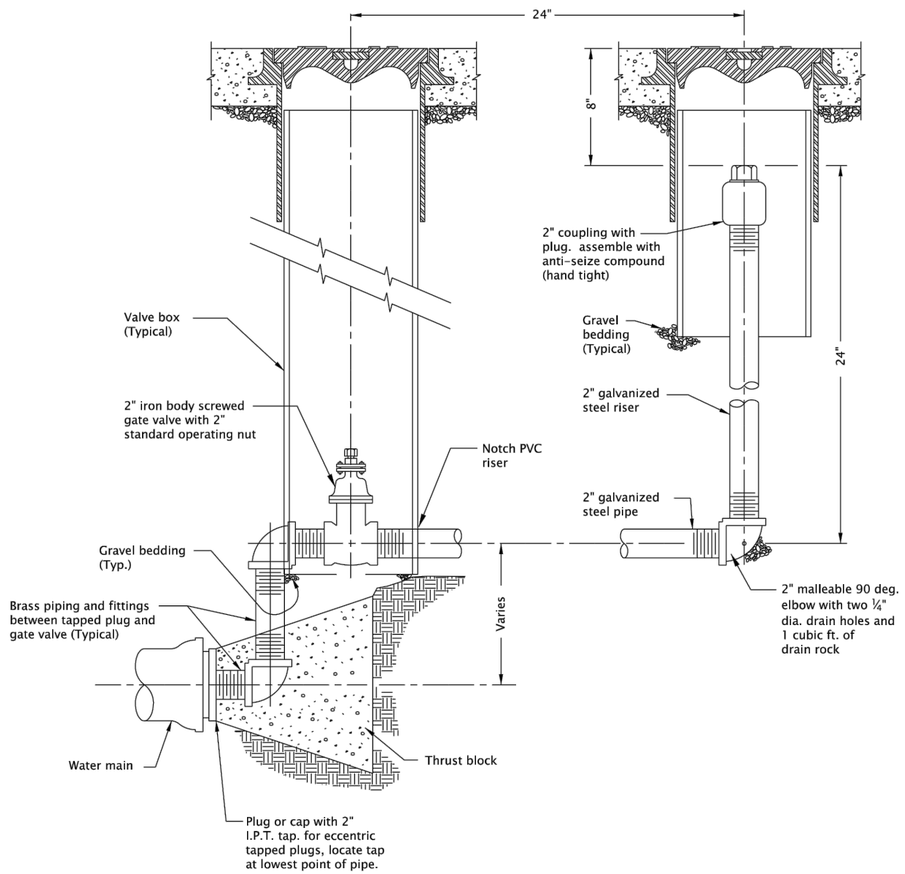

GENERAL NOTES FOR ALL DETAILS ON THIS SHEET:

1. Wrap main and fittings in thrust block zone with two layers of polyethylene film to facilitate future removal.
2. In lieu of concrete thrust block, restrain pipe or pour concrete straddle block.
3. See project plans for details not shown.

CALC. BOOK NO. N/A

SDR DATE 25-JUL-2017

The selection and use of this Standard Drawing, while designed in accordance with generally accepted engineering principles and practices, is the sole responsibility of the user and should not be used without consulting a Registered Professional Engineer.

NOTE: All material and workmanship shall be in accordance with the current Oregon Standard Specifications

OREGON STANDARD DRAWINGS

TYPICAL MAIN DEAD-END BLOWOFF ASSEMBLY

2021

DATE	REVISION DESCRIPTION

RD262

rd262.dgn 20-JUL-2020

RD262

Effective Date: June 1, 2021 - November 30, 2021

1 / D6 BLOW-OFF ASSEMBLY DETAIL
NOT TO SCALE

REGISTERED PROFESSIONAL ENGINEER
83524PE
OREGON
NOV. 10, 2009
MATTHEW D. WADLINGTON
RENEWS: 06/30/2022

Civil West Engineering Services, Inc.
541-223-5130
www.civilwest.com
200 FERRY ST SW
ALBANY, OR 97321

REV.	DATE	DESCRIPTION	BY

DESIGNED BY: ERM
DRAWN BY: FT
CHECKED BY: MDW
PROJECT NO: 2817-005

CITY OF SWEET HOME
LINN COUNTY, OR

2022 WATERMAIN REPLACEMENT PROGRAM

BLOW-OFF ASSEMBLY DETAIL

Sheet No. D6

Date APRIL 2

DATE:5/11/22 FILE:O:\CW_Projects\2817 Sweet Home\2817-005 9th Ave Water Distribution System Improvements Ph2\04 Final Design\Drawings\Dwg\2817-05-Details.dwg

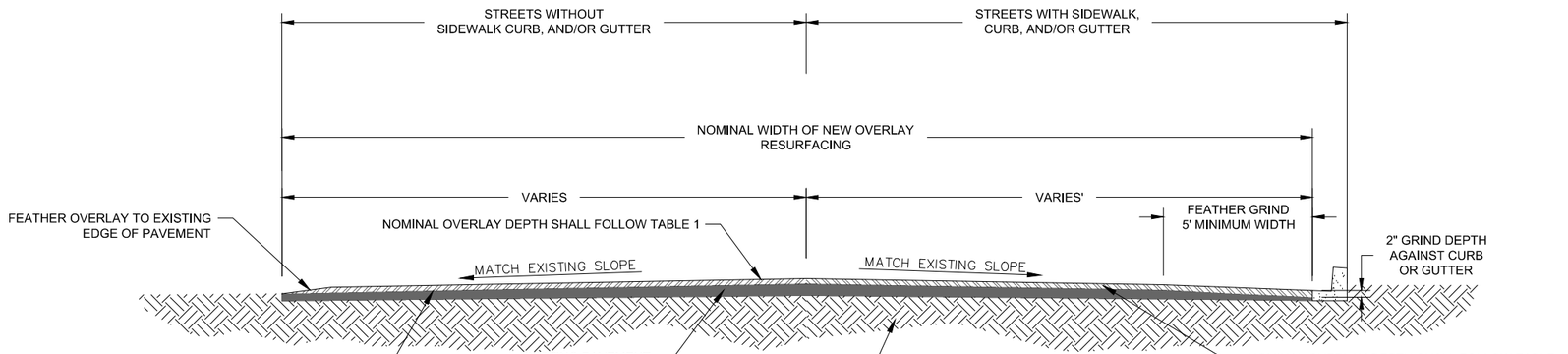

NOTES:

1. NOMINAL DEPTH OF AC OVERLAY SHALL FOLLOW TABLE 1
2. AC PAVEMENT SHALL BE A LEVEL 2-1/2 DENSE HMAC
3. MINIMUM CROSS SLOPE OF 1%

1 / D7 ASPHALT CONCRETE PAVEMENT DETAIL
NOT TO SCALE

TABLE 1	
STREET NAME	AC OVERLAY DEPTH
9TH AVENUE	2 IN
GRAPE STREET	4 IN
CATALPA STREET	2 IN
8TH AVENUE	2 IN
BIRCH STREET	2 IN
ALDER STREET	2 IN

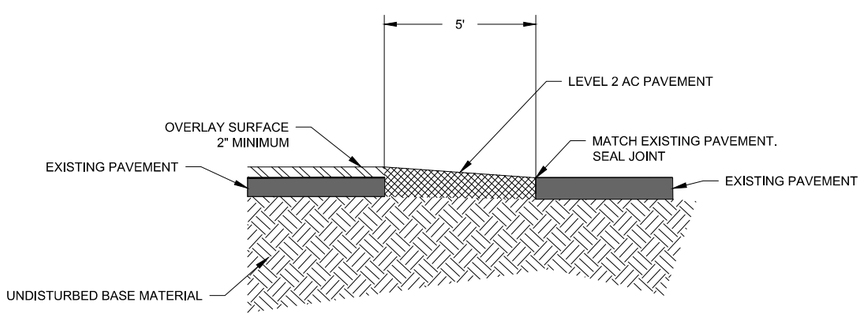

NOTES:

1. NOMINAL DEPTH OF AC OVERLAY SHALL FOLLOW TABLE 1
2. AC PAVEMENT SHALL BE A LEVEL 2-1/2 DENSE HMAC
3. CROSS SLOPE TO MATCH EXISTING PAVEMENT CROSS SLOPE

2 / D7 OVERLAY TRANSITION DETAIL
NOT TO SCALE

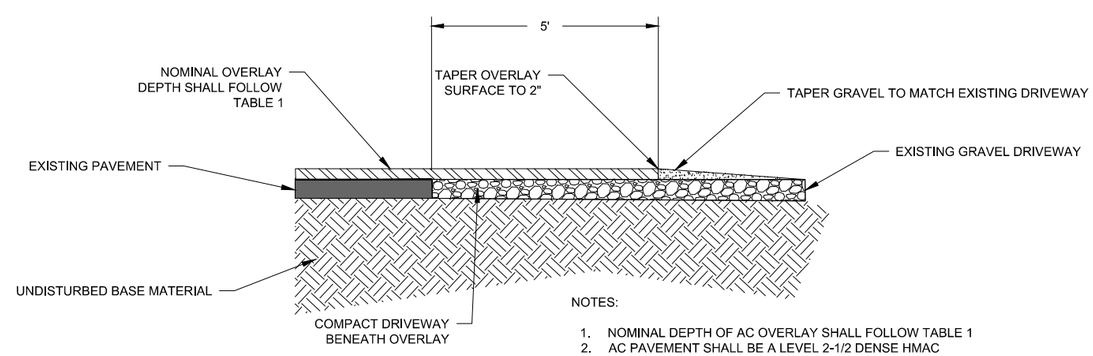

NOTES:

1. NOMINAL DEPTH OF AC OVERLAY SHALL FOLLOW TABLE 1
2. AC PAVEMENT SHALL BE A LEVEL 2-1/2 DENSE HMAC
3. CROSS SLOPE TO MATCH EXISTING PAVEMENT CROSS SLOPE

3 / D7 GRAVEL DRIVEWAY TRANSITION DETAIL
NOT TO SCALE

REGISTERED PROFESSIONAL ENGINEER
83524PE
OREGON
NOV. 10, 2009
MATTHEW D. WADLINGTON
RENEWS: 06/30/2022

Civil West Engineering Services, Inc.
541-223-5130
www.civilwest.com
200 FERRY ST SW
ALBANY, OR 97321

REV.	DATE	DESCRIPTION	BY

DESIGNED BY: ERM
DRAWN BY: FT
CHECKED BY: MDW
PROJECT NO: 2817-005

CITY OF SWEET HOME
LINN COUNTY, OR

2022 WATERMAIN REPLACEMENT PROGRAM

ASPHALT CONCRETE PAVEMENT DETAILS

Sheet No. D7
Date APRIL 2

DATE:5/11/22 FILE:O:\CW_Projects\2817 Sweet Home\2817-005 9th Ave Water Distribution System Improvements Ph2\04 Final Design\Drawings\Dwg\2817-05-Details.dwg

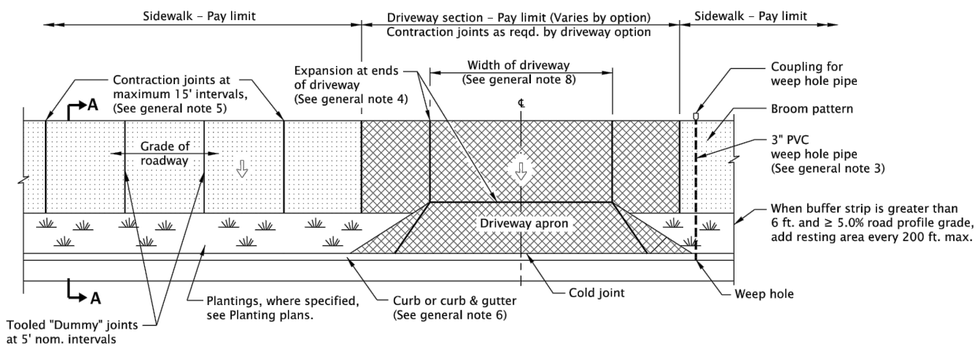

TYPICAL PLAN VIEW - SEPARATED SIDEWALK

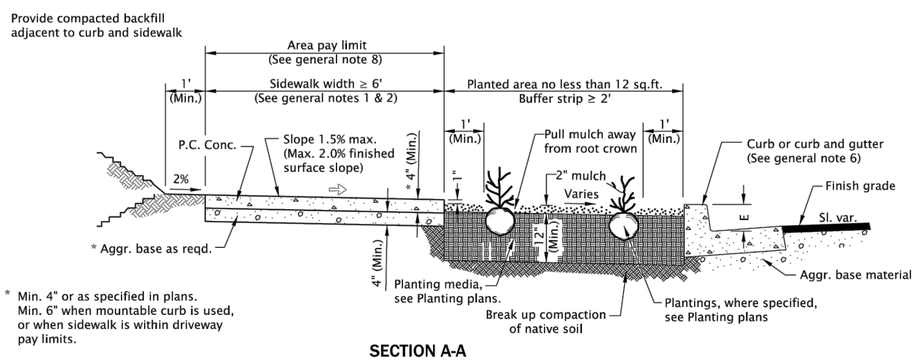

SECTION A-A

TYPICAL SETBACK SIDEWALK CROSS SECTION

E = curb exposure, see general note 6

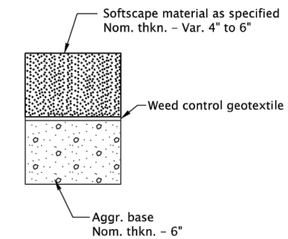

NON-PLANTED SOFTSCAPE CROSS SECTION

NOTES:
1 Use softscape materials allowed by jurisdiction.
2. Approved softscape materials:
   a) Loose, durable round rock 2"–4"in diameter
   b) Lava rock 2"–4"diameter
   c) Wood chips/bark mulch
   d) Sand
3. No crushed aggregate or pea gravel allowed.
4. Install softscape material flush with the top of sidewalk.

LEGEND

Sidewalk pay limit.

Driveway pay limit, varies by option, (See general note 8).

Cross slope 1.5% max. (Max. 2.0% finished surface slope) (Normal sidewalk cross slope)

GENERAL NOTES FOR ALL DETAILS ON THIS SHEET:

1. Include additional paved or unpaved 2' shy distance to vertical faces higher than 5' such as retaining walls, sound walls, fences and buildings.
2. Curb type and sidewalk width as shown on plans or as directed. On sidewalks 8' and wider, provide a longitudinal joint at the midpoint.
3. Install 3" pvc weep hole pipes in sidewalks where shown on plans, and allowed by jurisdiction. Place contraction joint over top of pipe. See Std. Dwg. RD700 for weep hole details.
4. Provide expansion joints around poles, posts, boxes, at ends of each driveway, and other fixtures which protrude through or against the structures. For sidewalk, monolithic curb & sidewalk, const. expansion joints at 45' maximum spacing. See Std. Dwg. RD722 for expansion joint details.
5. Const. contraction joints at 15' maximum spacing, and at ends of each curb ramp. See Std. Dwg. RD722 for contraction joint details.
6. Curb and gutter shown; see project plans for the curb design specified. For curb details, see Std. Dwgs. RD700 & RD701. ODOT standard E=7".
7. Sidewalk details are based on ODOT applicable standards.
8. Driveway encroaches into sidewalk shown; see project plans for the driveway design specified. For driveway details not shown, see Std. Dwgs. RD725, RD730, RD735, RD740, RD745 & RD750.
9. See project plans for details not shown.
10. Provide plantings in areas 12 SF or greater, as shown or directed. Treat areas less than 12 SF with mulch surfacing.

CALC. BOOK NO. N/A

SDR DATE 20-JUL-2020

NOTE: All material and workmanship shall be in accordance with the current Oregon Standard Specifications

The selection and use of this Standard Drawing, while designed in accordance with generally accepted engineering principles and practices, is the sole responsibility of the user and should not be used without consulting a Registered Professional Engineer.

OREGON STANDARD DRAWINGS

SEPARATED SIDEWALKS

2021

DATE	REVISION DESCRIPTION

RD721

Effective Date: June 1, 2021 – November 30, 2021

1 / D8 SIDEWALK WITH LANDSCAPE STRIP
NOT TO SCALE

REGISTERED PROFESSIONAL ENGINEER 83524PE OREGON NOV. 10, 2009 MATTHEW D. WADLINGTON
RENEWS: 06/30/2022

Civil West Engineering Services, Inc.
541-223-5130
www.civilwest.com
200 FERRY ST SW
ALBANY, OR 97321

REV.	DATE	DESCRIPTION	BY

DESIGNED BY: ERM
DRAWN BY: FT
CHECKED BY: MDW
PROJECT NO: 2817-005

CITY OF SWEET HOME
LINN COUNTY, OR

2022 WATERMAIN REPLACEMENT PROGRAM

SIDEWALK WITH LANDSCAPE STRIP DETAIL

Sheet No. D8
Date APRIL 2

DATE:5/11/22 FILE:O:\CW_Projects\2817 Sweet Home\2817-005 9th Ave Water Distribution System Improvements Ph2\04 Final Design\Drawings\Dwg\2817-05-Details.dwg
rd721.dgn 20-JUL-2020
RD721

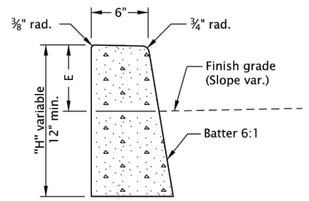

O.D.O.T. & City of Portland Standard "H"=16"

STANDARD CURB

(See general note 11)

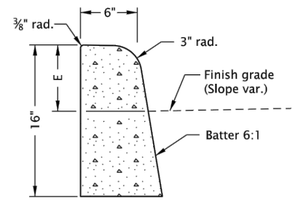

MOUNTABLE CURB

(See general note 11)

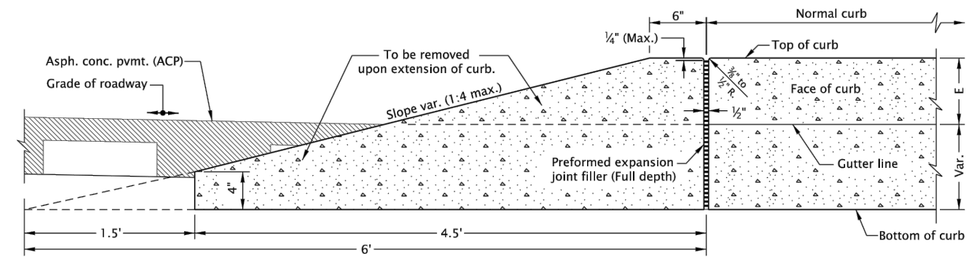

CURB ENDING DETAIL

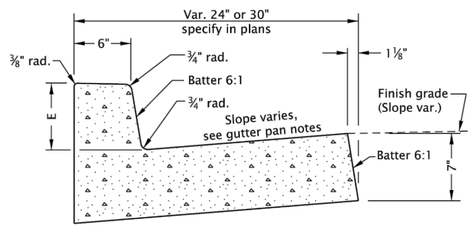

CURB AND GUTTER

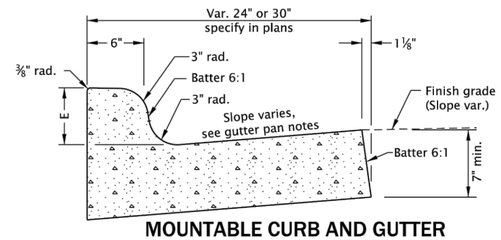

MOUNTABLE CURB AND GUTTER

GUTTER PAN NOTES:

Slope 5.0% normal.

Slope 4.0% max. at curb ramps.

Vary slope as reqd. for drainage. Vary where shown on plans, and allowed by jurisdiction.

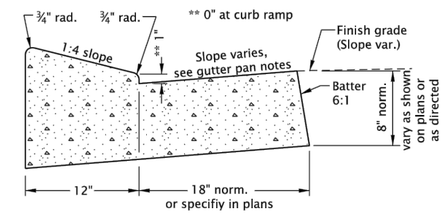

LOW PROFILE MOUNTABLE CURB AND GUTTER

(Where shown on plans)

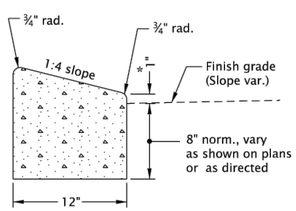

* 0" for Truck Apron

LOW PROFILE MOUNTABLE CURB

(See general note 11)

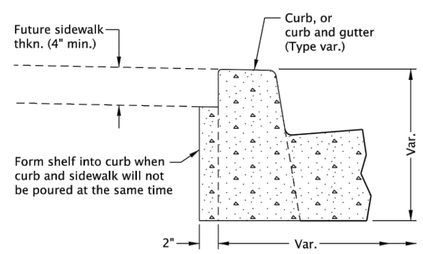

MODIFICATION FOR KEYWAY

(Where shown on plans)

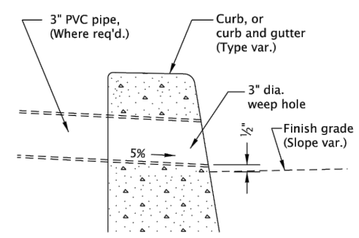

WEEP HOLE DETAIL

(Where shown on plans, and allowed by jurisdiction)

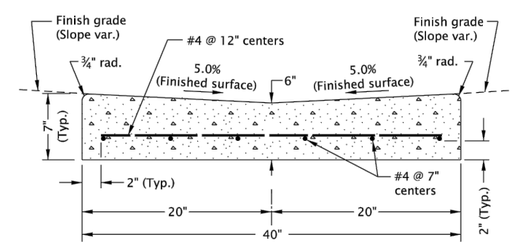

VALLEY GUTTER

CALC. BOOK NO. N/A

SDR DATE 20-JUL-2020

GENERAL NOTES FOR ALL DETAILS ON THIS SHEET:

1. Curb exposure "E" = 6" to 9", as measured vertically from flowline to highest point on curb. Vary as shown on plans or as directed. O.D.O.T standard "E"=7".
2. Const. curb expansion joints at 200' maximum spacing, and at points of tangency, and at ends of each driveways.
3. Const. curb contraction joints at 15' maximum spacing, and at ends of each inlet and curb ramp.
4. Transitions shall be used to connect curbs of different exposures "E". ("E" Is the total vertical dimension of those curb surfaces having a slope of 1:1 or steeper). Minimum desirable transition length shall be 20' for each 1" difference in "E".
5. Tops of all curbs shall slope toward the roadway at 1.5% max. (Max. 2.0% finished surface slope), unless otherwise shown, or as directed.
6. Dimensions are nominal, vary to conform with curb machine approved by the engineer.
7. Dimensions adjacent to radii are measured to the point of intersection of curb surfaces.
8. For sidewalk details, and monolithic curb & sidewalk, see Std. Dwgs. RD720 & RD721.
9. For drainage curbs, see Std. Dwg. RD701.
10. For curb ramp details, see Std. Dwgs. RD900 series.
11. On or along state highways, curb and gutter is required at curb ramp.

The selection and use of this Standard Drawing, while designed in accordance with generally accepted engineering principles and practices, is the sole responsibility of the user and should not be used without consulting a Registered Professional Engineer.

NOTE: All material and workmanship shall be in accordance with the current Oregon Standard Specifications

OREGON STANDARD DRAWINGS

CURBS

2021

DATE	REVISION DESCRIPTION

RD700

Effective Date: June 1, 2021 - November 30, 2021

RD700

1/D9 CURB AND GUTTER DETAIL

NOT TO SCALE

20-JUL-2020

rd700.dgn

REGISTERED PROFESSIONAL ENGINEER 83524PE OREGON NOV. 10, 2009 MATTHEW D. WADLINGTON

RENEWS: 06/30/2022

Civil West Engineering Services, Inc.

541-223-5130
www.civilwest.com

200 FERRY ST SW
ALBANY, OR 97321

REV.	DATE	DESCRIPTION	BY

DESIGNED BY: ERM
DRAWN BY: FT
CHECKED BY: MDW
PROJECT NO: 2817-005

CITY OF SWEET HOME
LINN COUNTY, OR

2022 WATERMAIN REPLACEMENT PROGRAM

CURB AND GUTTER DETAIL

Sheet No. D9

Date APRIL 2

DATE:5/11/22 FILE:O:\CW_Projects\2817 Sweet Home\2817-005 9th Ave Water Distribution System Improvements Ph2\04 Final Design\Drawings\Dwg\2817-005-Details.dwg

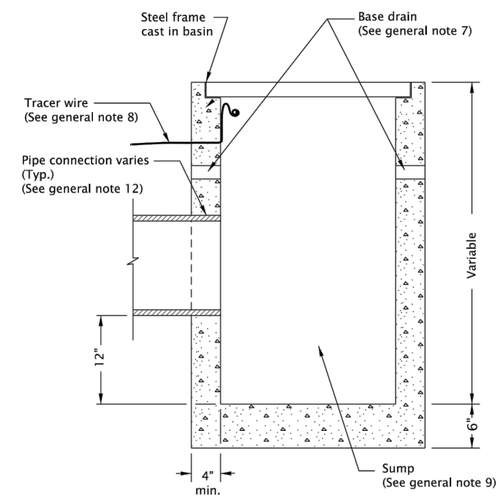

SECTION A-A

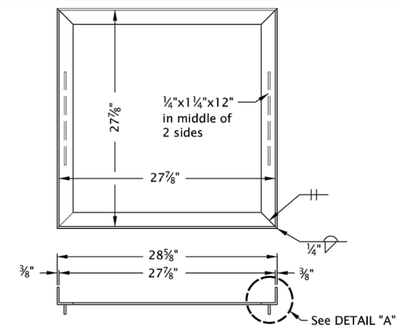

TYPE 3 FRAME - STEEL
(Hot-dip galvanize after fabrication)

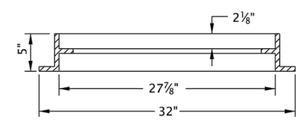

OPTIONAL CAST IRON FRAME
FOR A MORTAR-ON TYPE 3 CATCH BASIN

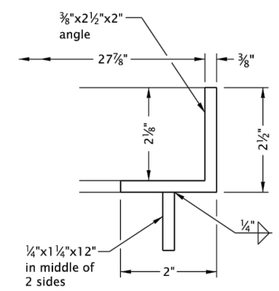

DETAIL "A"

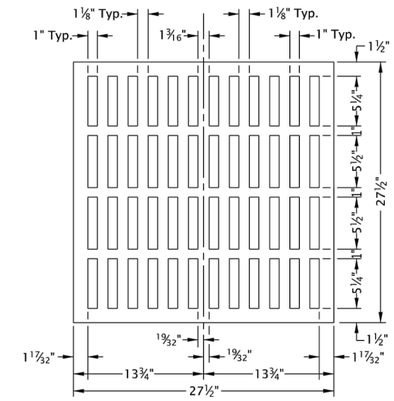

TYPE 3 CATCH BASIN GRATE

PRECAST RISER

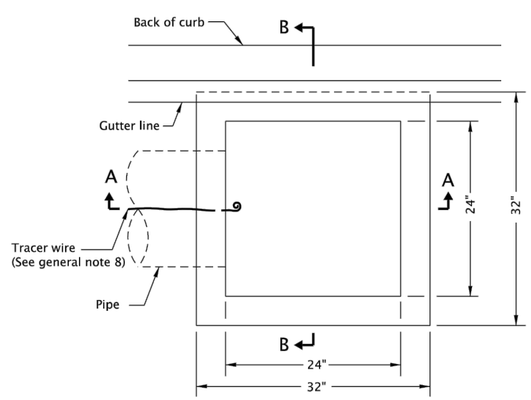

PLAN

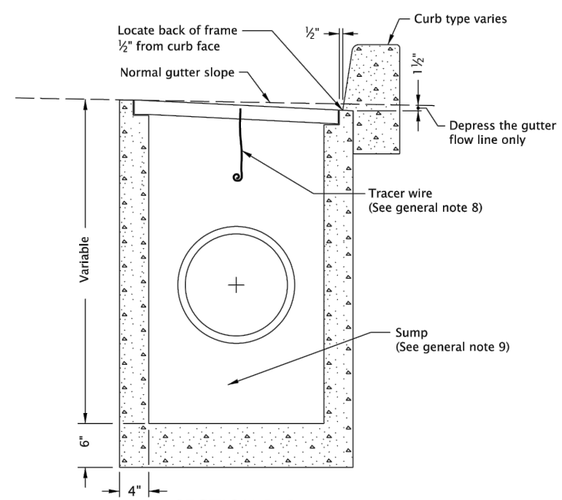

SECTION B-B

GENERAL NOTES FOR ALL DETAILS ON THIS SHEET:

1. Catch basin & grate shall meet H20 loading.
2. All concrete shall be commercial grade concrete.
3. Precast walls shall be a minimum of 4" thick.
4. For use by local agencies on low volume residental facilities as directed.
5. Depress gutter flowline and transition gutter as shown in Std. Dwg. RD366 perspective view.
6. Knockouts allowed for precast option.
7. If directed, install 3" dia. base drain with field installed mesh screen for subgrade drainage.
8. See Std. Dwg. RD336 for tracer wire details, or approved alternate.
9. Provide sump only where shown on plans, and allowed by jurisdiction.
   For sump details, see Std. Dwg. RD364.
10. Max. pipe diameter varies with pipe material.
11. All precast inlets shall conform to requirements of ASTM C913.
12. See Std. Dwg. RD339 for pipe to structure connections.
13. See project plans for details not shown.

CALC. BOOK NO. N/A

SDR DATE 21-JUL-2015

The selection and use of this Standard Drawing, while designed in accordance with generally accepted engineering principles and practices, is the sole responsibility of the user and should not be used without consulting a Registered Professional Engineer.

NOTE: All material and workmanship shall be in accordance with the current Oregon Standard Specifications

OREGON STANDARD DRAWINGS

TYPE "3" CATCH BASIN, FRAME AND GRATE

2021

DATE	REVISION DESCRIPTION

RD378

Effective Date: June 1, 2021 - November 30, 2021

RD378

rd378.dgn 20-JUL-2020

1
D10

CATCH BASIN DETAIL
NOT TO SCALE

REGISTERED PROFESSIONAL ENGINEER
83524PE
Matt Wadlington
OREGON
NOV. 10, 2009
MATTHEW D. WADLINGTON
RENEWS: 06/30/2022

Civil West Engineering Services, Inc.
541-223-5130
www.civilwest.com
200 FERRY ST SW
ALBANY, OR 97321

REV.	DATE	DESCRIPTION	BY

DESIGNED BY: ERM
DRAWN BY: FT
CHECKED BY: MDW
PROJECT NO: 2817-005

CITY OF SWEET HOME
LINN COUNTY, OR

2022 WATERMAIN REPLACEMENT PROGRAM

CATCH BASIN DETAIL

Sheet No. D10

Date APRIL 2

DATE:5/11/22 FILE:O:\CW_Projects\2817 Sweet Home\2817-005 9th Ave Water Distribution System Improvements Ph2\04 Final Design\Drawings\Dwg\2817-05-Details.dwg

CITY OF SWEET HOME

9TH AVENUE WATERLINE REPLACEMENT PROJECT
ADDENDUM #1
JUNE 2, 2022

The following clarifications, changes, additions to and/or deletions are hereby made a part of the solicitation for the above referenced project. Bidders shall acknowledge receipt of this addendum in the bid. Failure to do so may subject the bidder to disqualification.

RESPONSES TO BIDDER QUESTIONS

Q1: Could the additive alternate be awarded separately from Schedule B?
A: No, the additive alternate is a possible expansion to Schedule B, and would not be awarded independently.

Q2: Will Alder St require flagging?
A: Yes. Alder St connects to Hwy 228 and has no detour route available.

Q3: Is a Linn County right-of-way permit required for Schedule B?
A: Yes.

Q4: The specifications call for the meter box to be included in the water service bid items. The plans under improvement note 56 say the contractor furnishes the meter boxes for schedule A services and the City provides the meter boxes for schedule B on the plans. Will the City provide the meter boxes for schedule B?
A: This is an error in Sch B plan sheets. For both schedules, the City will provide the water meters and the contractor will provide the meter box as per technical specifications for bid items 7-8 and 25-26. See change to Sch B plans as indicated below.

Q5: Some of the water main fittings call out flanges or MJ connections others do not have a connection called out. Do you want valves flanged to adjacent fittings or is it contractor's choice where not called out?
A: The intent is that fittings be flanged to other fittings and MJ where connecting to pipe. For example, Sheet C5 detail 2 indicates valves that connect directly to pipe shall be FLxMJ (as for 9th Ave north/south valves), and valves connected to reducers shall be FLxFL with a FLxMJ reducer connecting to the pipe (as for Elm St east/west valves). This intent applies consistently to all assemblies whether called out or not.

Where connecting directly to existing valves such as Sheet C11 detail 2 (Birch and 7th connection) and elsewhere, the contractor shall confirm existing conditions and supply the appropriate fittings.

Q6: Are there any requirements for domestic material on this project?

A: No. To the best of the City's knowledge this project is not subject to Buy America requirements.

CHANGES, ADDITIONS, AND/OR DELETIONS TO THE DRAWINGS AND SPECIFICATIONS

New language is indicated by **bold underlined** font, deleted language is indicated by ~~strikethrough~~ font.

1. Schedule B, sheets C8 through C12, callout note 56 is changed as follows:

   ~~INSTALL NEW WATER METER. CITY SHALL PROVIDE METER AND VAULT.~~

   INSTALL NEW WATER METER (PROVIDED BY CITY). PROVIDE & INSTALL NEW METER BOX.

REQUEST FOR COUNCIL ACTION

Title:	Request for Council Action – Council of Governments Recruitment Services IGA - Amendment
Preferred Agenda:	August 09, 2022
Submitted By:	Julie Fisher, Administrative Services Manager
Reviewed By:	Christy Wurster, City Manager Pro Tem
Type of Action:	Resolution ___ Motion _x___ Roll Call ____ Other ____
Relevant Code/Policy:	City of Sweet Home Financial Policy
Towards Council Goal:	Goal 2.1: Update & Streamline Process Goal 2.5: Continue to Implement Best Financial Practices
Attachments:	None

Purpose of this RCA:
To authorize additional funds for Recruitment Services with OCWCOG.

Background/Context:

Staff requested direction from Council on their preferred recruitment strategy during the March 8, 2022 City Council meeting. The Council decided to use services by Oregon Cascades West Council of Governments (OCWCOG) for the executive search in the amount not to exceed $4,500.00.

Following the first round of interviews, it was the Council's desire to continue the recruitment to gain additional applicants. OCWCOG advertised the position for a second time, adding costs to the original contract. There were also additional travel costs and staff time for the second round of interviews.

The Challenge/Problem:
Should the City of Sweet Home extend funds for Oregon Cascades West Council of Governments for Recruitment Services in the amount of $1,500.00?

Stakeholders:
City of Sweet Home – Continued recruitment services with OCWCOG ensures a successful recruitment for our next City Manager.
Oregon Cascades West Council of Governments- provides clarity on charges and fees.

Issues and Financial Impacts:

The additional services will not exceed $1,500 including all costs.

Elements of a Stable Solution:
Approval or disapproval of the additional expenditures.

1. *Do Nothing*.
2. *Make a Motion to authorize staff to inter into an amended Intergovernmental Agreement with Oregon Cascades West Council of Governments for Recruitment Services.*

Recommendation:
Option #2 Make a Motion: *Authorize staff to enter into an amended Intergovernmental Agreement with Oregon Cascades West Council of Governments for Recruitment Services in an amount not to exceed $1,500.*

REQUEST FOR COUNCIL ACTION

Title:	Request for Council Action - Mahler WRF Special Inspections and Testing Services RFP
Preferred Agenda:	August 9, 2022
Submitted By:	Trish Rice, Engineering Tech 2
Reviewed By:	Christy Wurster, City Manager Pro Tem Greg Springman, Public Works Director
Type of Action:	Resolution ____ Motion _X_ Roll Call ___ Other ___
Relevant Code/Policy:	N/A
Towards Council Goal:	1.1 Develop specific steps for implementation of the adopted infrastructure master plans.
Attachments:	Special Inspections and Testing Services RFP

Purpose of this RCA:

Staff is requesting Council authorization to advertise the Special Inspections and Testing Services RFP for the Mahler WRF Improvements Project.

Background/Context:

Special inspections are required for facilities projects of this nature to assure compliance with project specifications and state building codes, above and beyond the routine inspections conducted by City or West Yost engineering staff and by the Building Official. Specific tests are required by the Oregon Structural Specialty Code. Examples of inspections and tests requiring specialized equipment and knowledge include, but may not be limited to: base rock compaction; rebar, steel, and concrete; and application of protective coatings. West Yost has prepared this RFP to assist the City with selecting a contractor specializing in such inspections and testing who will serve for both Phase 1 and Phase 2 construction. This contractor will be directly contracted with the City and will be independent of the construction contractor. Proposals will be due September 8, 2022. Selection will be made by a combination of price and qualifications. Contract award is anticipated to come before Council in late September to early October prior to breaking ground which is anticipated for November.

The Challenge/Problem:

To assure facilities construction work complies with project specifications and state building codes through the use of specialized equipment and knowledge.

Stakeholders:

- *City Residents*. Residents are the customers who deserve good service with the highest return on their taxes and fees that we can provide, and who trust the City to maintain their infrastructure systems at a high level of service.
- *Council Members*. Council members are the voice of the citizens we serve. Each member of this group is interested in providing the best service possible at the lowest possible cost. They must balance leadership with representation.
- *Public Works Department Staff.* This project will greatly improve the operability of the WWTP which is currently undersized and beyond its serviceable lifespan. Staff spends significant time fixing broken down equipment and fighting with system inefficiencies.
- *Management Team*. Comprised of five department heads, each with a responsibility to the citizens and Mayor to run their day-to-day operations as efficiently as possible.
- *Oregon DEQ*. The WWTP upgrade project is required to comply with DEQ regulations.

Issues and Financial Impacts:

These services are typically billed per test. The proposals will include the contractor's fee schedule and their estimated testing requirements for the project based on the design documents. Fees will be billed to the construction project budget line item.

Elements of a Stable Solution:

Procure a competent and affordable contractor for special inspections and testing services.

Options:

1. *Move to authorize staff to advertise the Special Inspections and Testing Services RFP.*
2. *Do nothing.* This is not a feasible option because specific tests are required by Oregon building codes.
3. *Request more information or give staff other direction.*

Recommendation:

Staff recommends Option 1, *Move to authorize staff to advertise the Special Inspections and Testing Services RFP.*

AUGUST 2022

Request for Proposals for Special Inspections and Testing Services

PREPARED FOR

City of Sweet Home
Mahler Water Reclamation Facility
Improvements Project

PREPARED BY

WEST YOST
Water. Engineered.

Request for Proposals for Special Inspections and Testing Services

Prepared for

City of Sweet Home
Mahler WRF Improvements Project

Project No. 936-50-21-09

WEST YOST
Water. Engineered.

AUGUST 2022

Table of Contents

INTRODUCTION **1**

THIRD-PARTY SPECIAL INSPECTIONS AND TESTING SERVICES OVERVIEW **2**

PROPOSAL ORGANIZATION AND CONTENT **4**

PROPOSAL SUBMITTAL INSTRUCTIONS **5**

PROPOSAL EVALUATION **5**

PROPOSAL CONDITIONS **5**

Interpretations and Addenda 5

Public Records 6

Acceptance, Rejection, or Cancellation of Award 6

Protests 6

Protests of Solicitation 6

Protests of Contract Award 6

Contract 7

LIST OF ATTACHMENTS

Attachment A. Drawings

Attachment B. Drawing S-002

Attachment C: City Standard Contract

Request for Proposals for Special Inspections and Testing Services

The City of Sweet Home (Owner) hereby solicits the submittal of Proposals from companies interested in providing Special Inspections and Testing Services for Sweet Home Mahler Water Reclamation Facility (Mahler WRF) Improvements Project (Project).

INTRODUCTION

The Owner anticipates the Mahler WRF Project will be constructed in multiple phases over a period of approximately three (3) years beginning in October 2022. A single Special Inspections and Testing Firm will contract directly with the Owner to provide third-party special inspections in accordance with Oregon code requirements for the full duration of the project. Mahler WRF Project are anticipated to include:

- **Liquid Stream Upgrades:** influent pump station (IPS), recycle drain pump station (RDPS), headworks, primary influent control structure (PICS), primary clarifiers, primary scum and sludge pumping, primary effluent control structure (PECS), existing aeration basin rehabilitation and expansion, third aeration basin, mixed liquor control structure (MLCS), 90-foot secondary clarifier with submersible RAS/WAS pump stations (SC90), submersible RAS/WAS pump stations for the existing 60-foot secondary clarifier, tertiary filtration, UV disinfection, utility water upgrades, Parshall Flume for effluent flow metering, associated electrical upgrades, and appurtenances and buildings.
- **Solids Stream Upgrades:** solids blend tank, solids thickening, solids feed pump station, primary anaerobic digester, digester mixing and heating systems, digested sludge storage tank, digested sludge transfer pump station, solids dewatering, dewatered cake storage, and associated appurtenances and buildings.
- **Electrical, Instrumentation and Controls Upgrades:** new electrical service and switchgear, motor control centers (MCCs), standby generator and automatic transfer switch, plant control panel, security and access systems, and associated appurtenances and buildings. Some electrical and controls equipment may be provided as Owner-supplied equipment. Owner's Integrator-of-Record will supply control panels and provide SCADA programming for the project. A new timber-framed Main Electrical and Blower Building will house the electrical switchgear, MCCs and control panels as well as new aeration blowers.
- **Plant Control and Maintenance Building:** a pre-engineered metal building (PEMB) with water quality laboratory, staff locker rooms, offices and multi-use areas, IT/OT room, archive storage, mechanical maintenance bay and associated appurtenances.
- **WWTP Outfall:** upsizing the existing outfall and construction of a new river outfall diffuser may be required either as part of the project or a separate phase of construction.

Mahler WRF improvements will be completed in multiple phases as follows:

- **Phase 1:** Influent pump station, Main Electrical and Blower Building, site demolition, site grading, retaining walls and yard piping. New electrical service and switchgear, standby generator and automatic transfer switch and other associated electrical upgrades.
- **Phase 2:** All other WWTP upgrades.
- **Phase 3:** New WWTP outfall (if required).

The current estimated cost of the project is $40 - $48 Million. Current anticipated timelines for each construction phase are as follows:

- Phase1: October 2022 – October 2023
- Phase 2: August 2023 – October 2025
- Phase 3: Summer 2025

Attachment A includes drawings showing project location and phased site plan. The WWTP Phase 1 Final Contract Documents for the Project are available for review City website, https://www.sweethomeor.gov/rfps.

THIRD-PARTY SPECIAL INSPECTIONS AND TESTING SERVICES OVERVIEW

A single Special Inspections and Testing Firm will be retained by the Owner for the full duration of the Mahler WRF Improvements Project. Special inspections and testing anticipated as part of the project will include, but not be limited to, the following:

- Civil construction inspections for roadway aggregate base rock, pipe trench aggregate backfill, hot-mix asphalt concrete (HMAC).
  - **Note**: Subgrade inspections will be performed by others.
- Concrete construction inspections per Oregon Structural Specialty Code (OSSC) Table 1705.3.
- Steel construction inspections per OSSC Table 1705.2.
- Coating inspections by NACE-certified coatings inspector to include the following:
  - **Pre-Surface Preparation**: Inspected to assure that grease and oil, sharp edges, and weld spatter are removed.
  - **Protective Coverings**: Inspection of placement of coverings to prevent contamination of surfaces from over blast or overspray.
  - **Ambient Conditions**: Monitor air and surface temperatures, relative humidity, and the dew point to assure that the work is done under proper weather conditions.
  - **Compressed Air Cleanliness**: Air used in blast cleaning, conventional spray application, and air for blow down is checked to assure that the air is free of moisture and oil contamination.
  - **Surface Preparation**: Abrasive equipment used for surface preparation is examined for adequacy to do the work. Proper storage and size of abrasives is verified, recycled abrasives are tested for contamination, proper degree of cleaning and surface profile is confirmed, and magnetic base readings are obtained. Areas of insufficient or inadequate surface preparation are marked for repair and rework prior to the application of coatings.
  - **Coating Mixing**: Mixing of coatings is observed to document that the specified material is used, and that multiple components are used within the allowable pot and shelf lives. All batch and lot numbers are documented for tracking purposes.
  - **Coating Application**: Application equipment is examined for cleanliness and adequacy to perform the work. Application techniques are observed and documented to ensure that coverage is obtained without detrimental runs, sags, pinholes or other deficiencies. Spot wet film thickness readings are taken to ensure that the correct amount of material is used.

- **Dry Film Thickness**: Dry film thickness of individual coats is measured and documented to ensure that it complies with the specification requirements and manufacturer's instructions. All dry film thickness surveys are measured according to SSPC-P A2 Standard.
- **Intercoat Cleanliness**: The integrity and cleanliness of each coat is examined prior to application of the next. This includes determination that the surfaces are free from oil/grease, dry spray, overspray, or other detrimental contamination.
- **Recoat Times**: The time between coats can be critical for certain materials. The minimum and maximum recoat times are observed and recorded and required conditioning agents or roughening between coats are verified to have been accomplished.
- **Final Inspection**: The entire coating system is examined until a quality product has been achieved. Final inspection operations include visual appearance, cure assessment and holiday detection.
- **Holiday Testing**: Capability to perform holiday testing to assure adequate cure of the lining system and ensure the lining is void and pinhole free and a continuous lining has been achieved. (If needed)
- **Documentation**: Detailed Daily Reports in PDF format with digital photographs and a final report summarizing the work performed on the Project.

- See drawing S002 included as Attachment B for structural special inspections and testing requirements.

The third-party Special Inspections and Testing Firm shall:

- Review and become familiar with Project Documents, schedules, estimates, etc. as necessary to perform the services as described.
- Coordinate special inspections and testing with General Contractor(s) throughout all project phases.
- Time is of the essence in the execution of special inspections and testing services. Typical response times desired shall be less than 24 hours for scheduling all special inspections and testing.
- Maintain field copies of all documentation at the jobsite for use by the City, Engineer and code inspection agencies.
- Optimize site visits to cover multiple tests or inspections throughout the project.
- Comply with the current edition of the Oregon Structural Specialty Code, Chapter 17. E.
- Provide monthly invoices to the Owner using an agreed upon schedule of values.
- Provide insurance coverage meeting the following minimum requirements:
  - Commercial General Liability of $1,000,000 combined single limit per occurrence and $2,000,000 aggregate.
  - Automobile liability limits of at least $1,000,000 combined single limit per accident.
  - Certificate of Insurance naming the Owner and Engineer as additionally insured.

PROPOSAL ORGANIZATION AND CONTENT

Proposals for Third-Party Special Inspections and Testing on the Mahler WRF Improvements Project shall be organized with the following sections and associated information:

1. Cover Letter signed by a company officer authorized to bind the company contractually and committing the company to provided services as requested.
2. Statement of Qualifications with company overview addressing the company's specific qualifications for serving as the Owner's Third-Party Special Inspections and Testing firm on the Mahler WRF Improvements Project. The SOQ shall include a summary of experience providing third-party special inspections and testing for projects of similar type, size and duration completed for Oregon municipalities.
    a. Provide References for a minimum of five (5) similar projects completed within the past seven (7) years. Similar projects shall be defined as municipal water and wastewater projects with a total construction cost of over $1 Million.
    b. Resumes of all proposed personal who will be involved in the Project, including inspector certifications.
    c. Location of the office and laboratory that will provide the requested services.
    d. Proposed response times for inspections and testing for the requested services.
3. Schedule of Values for all anticipated special inspections and testing, including:
    e. The Schedule of Values will be used as the basis of the contract as the specific testing requirements for the Project is current unknown.
    f. Current pricing for all anticipated field inspections and testing to be provided by the Third-Party Special Inspection and Testing company.
    g. Hourly rates shall be all-inclusive and shall include labor, insurance, mobilization, demobilization, data base, travel expenses, lodging, meals, office supplies, office equipment, photocopying, overhead and profit and all other expenses necessary to complete the referenced project according to "normal" industry standards per the specifications, exclusive of all taxes.
    h. Overhead costs shall include all costs associated with project management, corporate accounting, invoice preparation, office rental and all other expenses indirectly associated with field staff for the Third-Party Special Inspections and Testing company.
    i. Mileage charges on a per trip basis and proposed approaches for reducing mileage costs to be paid by the Owner. Proposers shall specify if mileage charges are included in base Hourly Rates provided in 3c or if those charges are tracked separately.
    j. There shall be no charges for overtime or holiday premium pay.
    k. Anticipated annual % increase in all fees for the following years: 2023, 2024, 2025 and 2026.
    l. The Schedule of Values negotiated between the Owner and Third-Party Special Inspections company shall be all-inclusive. No other expenses will be allowed.
4. In Appendix A, include copies of all forms to be utilized in the execution of special inspections and testing on the project.
5. In Appendix B, include any other pertinent information deemed important by the Proposer for consideration by the Owner.

PROPOSAL SUBMITTAL INSTRUCTIONS

Submit two (2) hard copies and one (1) electronic copy on USB drive of the proposal labeled "Proposal for Third-Party Special Inspections and Testing on the Mahler WRF Improvements Project" no later than **2:00 PM** local time on **Thursday, September 8, 2022** as follows:

Mr. Greg Springman
Public Works Director
City of Sweet Home Public Works Department
1400 24th Avenue
Sweet Home, OR 97386

If a Proposer deems any information requested to be proprietary information, provide one (1) additional hard copy with proprietary information redacted.

Questions regarding the RFP shall be directed to:

Ms. Trish Rice
Engineering Technician II
City of Sweet Home Public Works Department
1400 24th Avenue
Sweet Home, OR 97386
Ph: (541) 818-8037
E-mail: price@sweethomeor.gov

PROPOSAL EVALUATION

The City shall evaluate all proposals and select the submittal the City deems to be the highest scoring Proposer in accordance with ORS 279B. Scoring to be used to evaluate proposals will be based on the following:

Statement of Qualifications	30 points
Schedule of Values	70 points
Total Points	**100 points**

PROPOSAL CONDITIONS

Interpretations and Addenda

Owner will notify Proposers of addenda using the automated mailing list on the City's website. It is the responsibility of Proposers to verify they are listed with the correct contact information on the RFP-holders list.

If necessary, interpretations or clarifications in response to questions will be issued by Addenda to all parties listed on the City's website. Oral and other interpretations or clarifications will be without legal effect.

Questions received less than five (5) business days before the Proposal due date may not be answered.

Public Records

All proposals submitted are the property of the City of Sweet Home, thus subject to disclosure pursuant to Oregon Public Records law, as qualified by ORS 279B.060(6) for similar personal services contracts. Accordingly, proposals received and opened shall not be available for public inspection until after City's notice of intent to award this contract is issued. Thereafter, except for information marked "Proprietary", all documents received by City shall be available for public disclosure. The City will attempt to maintain the confidentiality of materials marked "Proprietary" to the extent permitted under the Oregon Public Records law. By responding to this RFP, Proposers waive any challenge to the City's decisions in this regard.

Marking all, or substantially all, or your proposal as "Proprietary" is not permitted and may be grounds for the City considering your proposal nonresponsive, at the City's sole discretion. If your proposal contains proprietary information protected under this section, please provide an additional redacted digital copy on the USB storage drive.

Acceptance, Rejection, or Cancellation of Award

1. This RFP does not constitute an offer to contract and does not commit Owner to the award of a Contract to anyone, or to pay any costs incurred in the preparation and submission of proposals.
2. All costs of the Proposal process, interviews, contract negotiations, and related expenses are the responsibility of the Proposer.
3. Owner reserves the right to waive any informality or irregularity in any proposal or proposals.
4. Owner reserves the right to delay, suspend, modify or cancel all or part of this RFP at any time before execution of the Contract for any reason determined to be in the Owner's best interest.
5. All submittals become the property of the Owner.

Protests

Protests of Solicitation

Proposers are directed to the protest procedures contained in ORS 279B.405 and OAR 137-047-0730. A prospective Proposer may file a protest of the solicitation if the prospective Proposer believes that the procurement process is contrary to law or that a solicitation document is unnecessarily restrictive, is legally flawed or improperly specifies a brand name. Protests shall be submitted to the City in writing no later than ten (10) days prior to the solicitation closing date.

Protests of Contract Award

Proposers are directed to the protest procedures contained in ORS 279B.410 and OAR 137-047-0740. A Proposer may protest the award of a public contract or a notice of intent to award a public contract, whichever occurs first, if:

- (a) The Proposer or proposer is adversely affected because the Proposer or proposer would be eligible to be awarded the public contract in the event that the protest were successful; and
- (b) The reason for the protest is that:

- (A) All lower bids or higher ranked proposals are nonresponsive;
- (B) The contracting agency has failed to conduct the evaluation of proposals in accordance with the criteria or processes described in the solicitation materials;
- (C) The contracting agency has abused its discretion in rejecting the protestor's bid or proposal as nonresponsive; or
- (D) The contracting agency's evaluation of bids or proposals or the contracting agency's subsequent determination of award is otherwise in violation of this chapter or ORS chapter 279A.

Protests shall be submitted to the City in writing no later than seven (7) days following the notice of intent to award.

Contract

The City desires to enter into an Agreement in the form included in Attachment C, which includes all goods and services specifically outlined in this RFP. The selected Proposer will be expected to sign the Agreement, which will incorporate this RFP and awardee's proposal. Any open terms in the Attachment C will be completed, based upon awardee's proposal. Negotiations shall be limited to cost and any other terms the City chooses to negotiate, in City's sole discretion.

Any contract requires that awardee will comply with all applicable federal and state laws, rules and regulations. This RFP is issued in accordance with the provisions of the laws including statutes, ordinances, resolutions, and rules, of the State of Oregon and the City of Sweet Home. Authorized & approved for posting by the City Council and the City Manager. Staff can amend the RFP and contract form to meet the best interests of the City with the approval of the City Manager.

THIS SOLICITATION IS NOT AN IMPLIED CONTRACT AND MAY BE MODIFIED OR REVOKED WITHOUT NOTICE.

Attachment A

Project Reference Drawings

MAHLER WATER RECLAMATION FACILITY IMPROVEMENTS PROJECT

2022

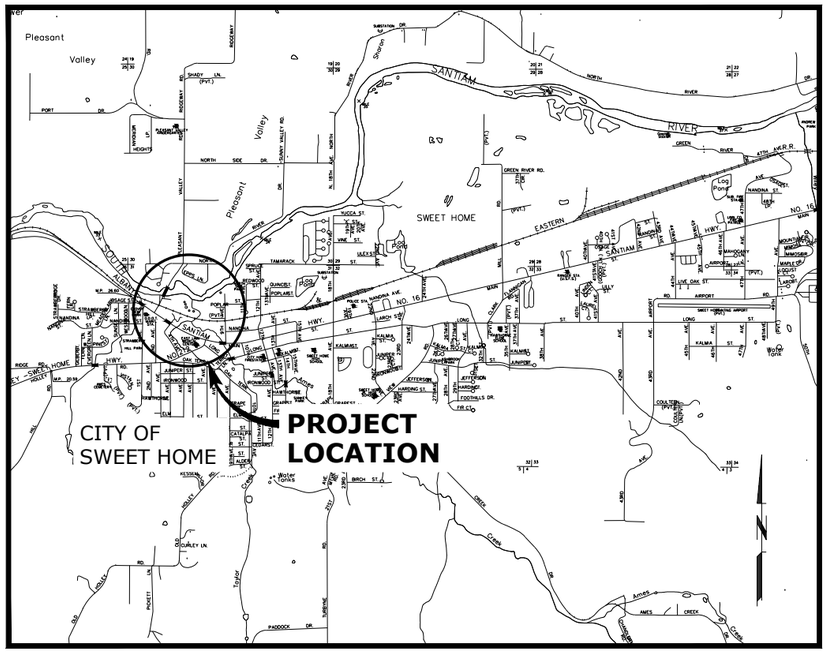

VICINITY MAP

SCALE: 1"=2000'

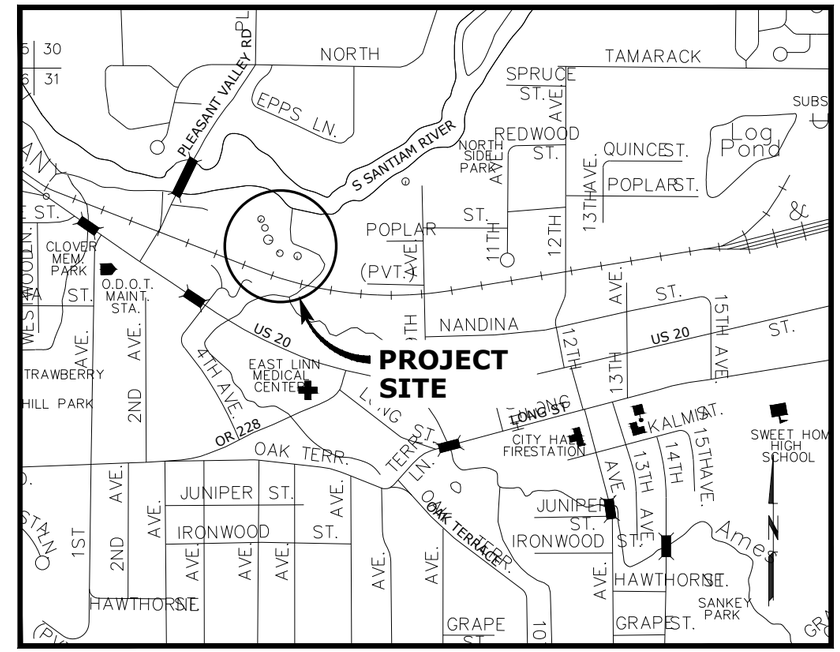

LOCATION MAP

SCALE: 1"=500'

WEST YOST
Water. Engineered.

ATTENTION: OREGON LAW REQUIRES THE CONTRACTOR TO FOLLOW THE RULES ADOPTED BY THE OREGON UTILITY NOTIFICATION CENTER. THOSE RULES ARE SET FORTH IN OAR 952-001-0010 THROUGH OAR 952-001-0090. THE CONTRACTOR MAY OBTAIN COPIES OF THE RULES BY CALLING THE UTILITY NOTIFICATION CENTER. (NOTE: THE TELEPHONE NUMBER FOR THE OREGON UTILITY NOTIFICATION CENTER IS 503-246-6699.)

C:\Users\bbarry\ACCDocs\Cadworks Inc\Sweet Home WWTP\Project Files\Active Design - CAD\2D Design\01_General\BVB\19-2605-OR-G.dwg G-000 6/7/2022 6:51 PM BBARRY 24.1s (LMS Tech)

NOTES:

1. CONTRACTOR TO CONFIRM ALL ACCESS POINTS FOR CONSTRUCTION AND STAGING AREAS WITH OWNER.

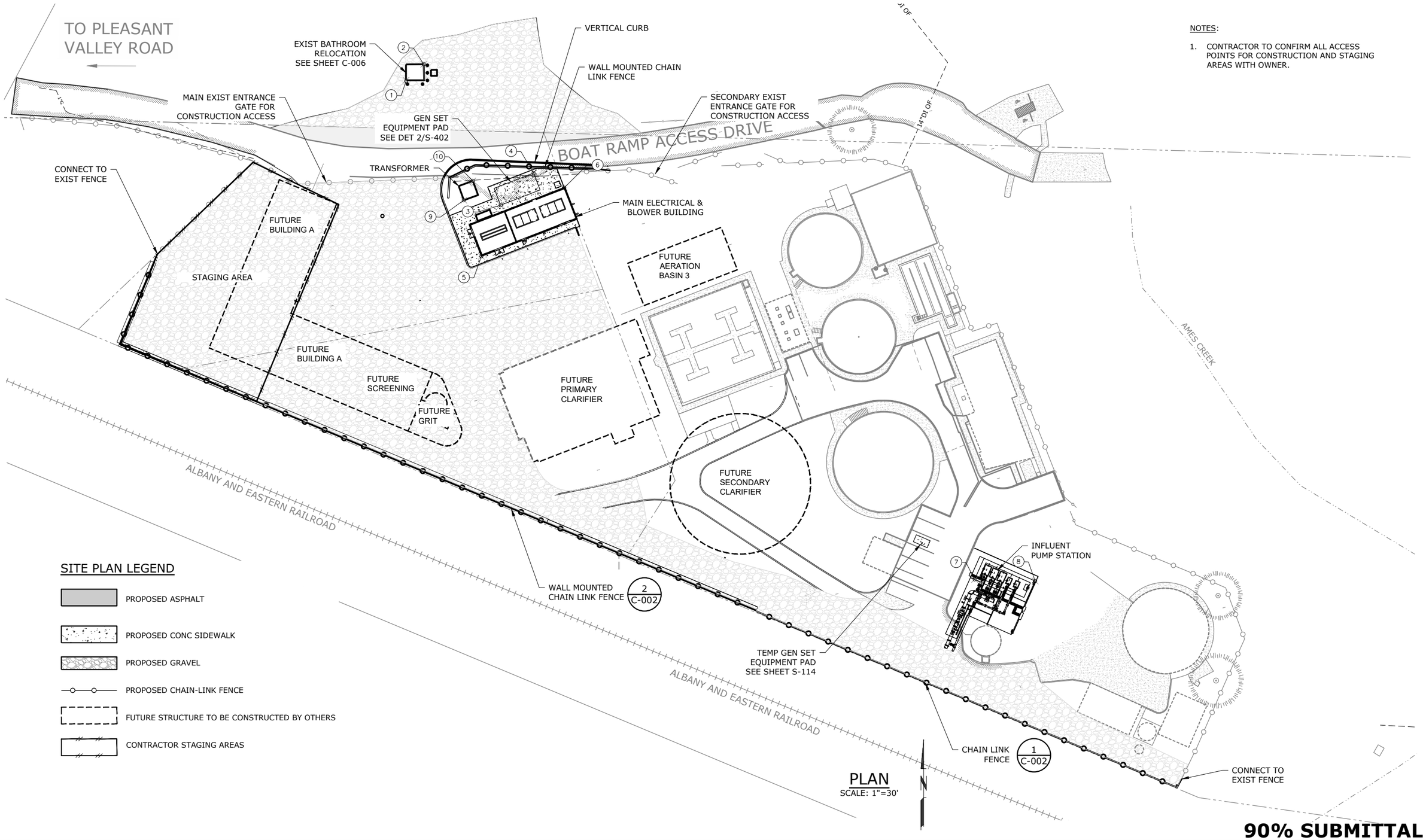

PLAN
SCALE: 1"=30'

SITE PLAN LEGEND

- PROPOSED ASPHALT
- PROPOSED CONC SIDEWALK
- PROPOSED GRAVEL
- PROPOSED CHAIN-LINK FENCE
- FUTURE STRUCTURE TO BE CONSTRUCTED BY OTHERS
- CONTRACTOR STAGING AREAS

90% SUBMITTAL

NO.	DATE	BY	REVISION

NOTICE
0 ½ 1
IF THIS BAR DOES NOT MEASURE 1" THEN DRAWING IS NOT TO SCALE

BVB DESIGNED
BVB DRAWN
WJM CHECKED

REGISTERED PROFESSIONAL ENGINEER 85993PE OREGON NOV. 14, 2017 BROOKE VICTORIA BARRY
EXPIRES : 12/31/2023

WEST YOST
Water. Engineered.

Sweet Home Oregon at its best!

MAHLER WATER RECLAMATION FACILITY IMPROVEMENTS PROJECT PHASE 1

OVERALL SITE PLAN PHASE 1

PROJECT NO.: 19-2065 | SCALE: AS SHOWN | DATE: JUNE 2022

SHEET C-030

P:\Clients\936 City Of Sweet Home\50-21-09 WWTP Phase 1 Final Design\CAD\Figures\19-2605-OR-C-SITE-PH1.dwg C-030 7/5/2022 9:22 AM BBARRY 24.1s (LMS Tech)

TO PLEASANT VALLEY ROAD

CHAIN LINK SLIDING GATE

DOUBLE SWING GATE

CHAIN LINK FENCE

DOUBLE SWING GATE

OUTFALL IMPROVEMENTS (POTENTIALLY PHASE 3)

BOAT RAMP ACCESS DRIVE

r=30'

BUILDING A (O&M AND CONTROLS)

FUTURE AERATION BASIN 4

AB3

20'

TERTIARY BUILDING

UW STORAGE

UV DISINFECTION

MLCS

54.9'

PRIMARY CLARIFIERS

FUTURE PRIMARY CLARIFIER 4

PECS

TERTIARY FILTERS

AMES CREEK

PICS

SC60 RAS/WAS PS

FUTURE GAS CONDITIONING AND COGEN

20'

BUILDING A (HEADWORKS AND DEWATERING)

32.6'

20'

EXIST SC60

ALBANY AND EASTERN RAILROAD

Ø7'-6"

SC90 WAS PS

SC90

ODOR CONTROL

DG2

PRIMARY SCUM PIT

EXIST ELEC BLDG

SC90 RAS PS

DG1

r=28'

27.98'

RDPS

ALBANY AND EASTERN RAILROAD

ODOR SCRUBBER (REHAB)

SOLIDS BLDG

CONNECT TO EXIST FENCE

SOLIDS BLEND TANK

SITE PLAN LEGEND

- PROPOSED ASPHALT PAVEMENT
- PROPOSED CONC SIDEWALK
- PROPOSED GRAVEL
- PROPOSED CHAIN-LINK FENCE
- FUTURE STRUCTURE TO BE CONSTRUCTED BY OTHERS

PLAN

SCALE: 1"=30'

N

30% SUBMITTAL

NO.	DATE	BY	REVISION

NOTICE

0 ½ 1

IF THIS BAR DOES NOT MEASURE 1" THEN DRAWING IS NOT TO SCALE

BVB DESIGNED

BVB DRAWN

WJM CHECKED

PRELIMINARY ONLY
DO NOT USE FOR CONSTRUCTION

JUNE 2022

West Yost
WWW.WESTYOST.COM

WEST YOST
Water. Engineered.

Sweet Home Oregon at its best!

MAHLER WATER RECLAMATION FACILITY IMPROVEMENTS PROJECT PHASE 2

CIVIL SITE

OVERALL SITE PLAN PHASE 2

PROJECT NO.: 19-2065 | SCALE: AS SHOWN | DATE: JUNE 2022

SHEET C-032

P:\Clients\936 City Of Sweet Home\50-21-09 WWTP Phase 1 Final Design\CAD\Figures\19-2605-OR-C-SITE-P2.dwg C-032 7/5/2022 11:40 AM BBARRY 24.1s (LMS Tech)

Attachment B

Drawing S-002

SPECIAL INSPECTIONS:

VERIFICATION AND INSPECTION	CONTINUOUS	PERIODIC	REFERENCED STANDARD
OSSC TABLE 1705.6, SOILS:			
1. VERIFY MATERIALS BELOW SHALLOW FOUNDATIONS ARE ADEQUATE TO ACHIEVE THE DESIGN BEARING CAPACITY.		X	
2. VERIFY EXCAVATIONS ARE EXTENDED TO PROPER DEPTH AND HAVE REACHED PROPER MATERIAL.		X	
3. PERFORM CLASSIFICATION AND TESTING OF COMPACTED FILL MATERIALS.		X	
4. VERIFY USE OF PROPER MATERIALS, DENSITIES AND LIFT THICKNESSES DURING PLACEMENT AND COMPACTION OF COMPACTED FILL.	X		
5. PRIOR TO PLACEMENT OF COMPACTED FILL, INSPECT SUBGRADE AND VERIFY THAT SITE HAS BEEN PREPARED PROPERLY.		X	
OSSC TABLE 1705.3, CONCRETE CONSTRUCTION:			
1. INSPECT REINFORCEMENT AND VERIFY PLACEMENT.		X	OSSC 1908.4
2. REINFORCING BAR WELDING:			
A. VERIFY WELDABILITY OF REINFORCING BARS OTHER THAN ASTM A706.		X	
B. INSPECT SINGLE PASS FILLET WELDS, MAXIMUM 5/16".		X	
C. INSPECT ALL OTHER WELDS.	X		
3. INSPECT ANCHORS CAST IN CONCRETE.		X	
4. INSPECT ANCHORS POST INSTALLED IN HARDENED CONCRETE MEMBERS.			
A. ADHESIVE ANCHORS INSTALLED IN HORIZONTALLY OR UPWARDLY INCLINED ORIENTATIONS TO RESIST SUSTAINED TENSION LOADS.	X		
B. MECHANICAL ANCHORS AND ADHESIVE ANCHORS NOT DEFINED IN 4.A.		X	
5. VERIFY USE OF REQUIRED MIX DESIGN.		X	OSSC 1904.1, 1904.2 1908.2, 1908.3
6. PRIOR TO CONCRETE PLACEMENT, FABRICATE SPECIMENS FOR STRENGTH TESTS, PERFORM SLUMP AND AIR CONTENT TESTS AND DETERMINE THE TEMPERATURE OF THE CONCRETE.	X		OSSC 1908.10
7. INSPECT CONCRETE AND SHOTCRETE PLACEMENT FOR PROPER APPLICATION TECHNIQUES.	X		OSSC 1908.6, 1908.7 1908.8
8. VERIFY MAINTENANCE OF SPECIFIED CURING TEMPERATURE AND TECHNIQUES.		X	OSSC 1908.9
9. INSPECT PRESTRESSED CONCRETE FOR:			
A. APPLICATION OF PRESTRESSING FORCES.	X		
B. GROUTING OF BONDED PRESTRESSING TENDONS.	X		
10. INSPECT ERECTION OF PRECAST CONCRETE MEMBERS.		X	
11. VERIFY IN-SITU CONCRETE STRENGTH PRIOR TO STRESSING OF TENDONS IN POST-TENSIONED CONCRETE AND PRIOR TO REMOVAL OF SHORES AND FORMS FROM BEAMS AND STRUCTURAL SLABS.		X	
12. INSPECT FORMWORK FOR SHAPE, LOCATION AND DIMENSIONS OF THE CONCRETE MEMBER BEING FORMED.		X	
OSSC TABLE 1705.2, STEEL CONSTRUCTION:			
1. MATERIAL VERIFICATION OF HIGH STRENGTH BOLTS, NUTS AND WASHERS:			
A. IDENTIFICATION MARKINGS TO CONFORM TO ASTM STANDARDS AND SPECIFIED IN THE APPROVED CONSTRUCTION DOCUMENTS.		X	AISC 360, SECTION A3.3 AND APPLICABLE ASTM MATERIAL STANDARDS
B. MANUFACTURER'S CERTIFICATE OF COMPLIANCE REQUIRED.		X	
2. INSPECTION OF HIGH STRENGTH BOLTING:			
A. SNUG TIGHT JOINTS.		X	AISC 360 SECTION M2.5
B. PRETENSIONED AND SLIP CRITICAL JOINTS USING TURN OF THE NUT WITHOUT MATCHMAKING, TWIST OFF BOLT OR DIRECT TENSION INDICATOR METHODS OF INSTALLATION.		X	
C. PRETENSIONED AND SLIP CRITICAL JOINTS USING TURN OF THE NUT METHOD MATCHMAKING OR CALIBRATED WRENCH METHODS OF INSTALLATION.	X		
3. MATERIAL VERIFICATION OF STRUCTURAL STEEL:			
A. FOR STRUCTURAL STEEL, IDENTIFICATION MARKINGS TO CONFORM TO AISC 360.		X	AISC 360, SECTION N2.1
B. FOR OTHER STEEL, IDENTIFICATION MARKINGS TO CONFORM TO ASTM STANDARDS SPECIFIED IN THE APPROVED CONSTRUCTION DOCUMENTS.		X	APPLICABLE ASTM MATERIAL STANDARDS
C. MANUFACTURER'S CERTIFIED TEST REPORTS.		X	
4. MATERIAL VERIFICATION OF COLD FORMED STEEL DECK:			
A. MANUFACTURER'S CERTIFIED TEST REPORTS.		X	
5. MATERIAL VERIFICATION OF WELD FILLER MATERIALS:			
A. IDENTIFICATION MARKINGS TO CONFORM TO AWS SPECIFICATION IN THE APPROVED CONSTRUCTION DOCUMENTS.		X	AISC 360, SECTION A3.5 AND APPLICABLE AWS A5 DOCUMENTS
B. MANUFACTURER'S CERTIFICATE OF COMPLIANCE REQUIRED.		X	
6. INSPECTION OF WELDING:			
A. STRUCTURAL STEEL AND COLD FORMED STEEL DECK			AWS D1.1
1. COMPLETE AND PARTIAL PENETRATION GROOVE WELDS.	X		
2. MULTIPASS FILLET WELDS.	X		
3. SINGLE PASS FILLET WELDS > 5/16".	X		
4. PLUG AND SLOT WELDS.	X		
5. SINGLE PASS FILLET WELDS ≤ 5/16".		X	AWS D1.3
6. FLOOR AND ROOF DECK WELDS.		X	
B. REINFORCING STEEL:			AWS D1.4 ACI 318, SECTION 4.2.2
1. VERIFY WELDABILITY OF REINFORCING BARS OTHER THAN ASTM A706.		X	
2. REINFORCING STEEL RESISTING FLEXURAL AND AXIAL FORCES IN INTERMEDIATE AND SPECIAL MOMENT FRAMES, AND BOUNDARY ELEMENTS OF SPECIAL STRUCTURAL WALLS OF CONCRETE AND SHEAR REINFORCEMENT.	X		
3. SHEAR REINFORCEMENT.	X		
4. OTHER REINFORCING STEEL.		X	
7. INSPECTION OF STEEL FRAME JOINT DETAILS FOR COMPLIANCE:			
A. DETAILS SUCH AS BRACING AND STIFFENING.		X	
B. MEMBER LOCATION.		X	
C. APPLICATION OF JOINT DETAILS AT EACH CONNECTION.		X	

NOTE: SPECIAL INSPECTION SHALL BE PROVIDED FOR ALL STRUCTURAL ELEMENTS REQUIRING SPECIAL INSPECTION REGARDLESS OF WHETHER THE WORK IS PERFORMED ONSITE OR OFFSITE (SHOP).

STRUCTURAL SUBMITTALS

SHOP DRAWINGS AND PRODUCT DATA SHALL BE SUBMITTED TO THE ENGINEER PRIOR TO ORDERING, FABRICATION AND CONSTRUCTION REGARDING ALL STRUCTURAL ITEMS INCLUDING:

CONCRETE MIX DESIGNS
CONCRETE AND MASONRY REINFORCING STEEL
ITEMS EMBEDDED IN CONCRETE
STRUCTURAL STEEL

IF THE SHOP DRAWINGS DIFFER FROM OR ADD TO THE DESIGN OF THE STRUCTURAL DRAWINGS, THEY SHALL BEAR THE SEAL AND SIGNATURE OF A STRUCTURAL ENGINEER REGISTERED IN THE STATE OF OREGON. ANY CHANGES TO THE STRUCTURAL DRAWINGS SHALL BE SUBMITTED TO THE ENGINEER AND ARE SUBJECT TO THE REVIEW AND ACCEPTANCE OF THE ENGINEER.

DESIGN DRAWINGS, SHOP DRAWINGS, AND CALCULATIONS FOR THE DESIGN AND FABRICATION OF ITEMS THAT ARE DESIGNED BY OTHERS, INCLUDING: COLD FORMED METAL STUDS, WINDOW WALL AND ALL OTHER GLAZING SYSTEMS. SHALL BEAR THE SEAL AND SIGNATURE OF A CIVIL OR STRUCTURAL ENGINEER REGISTERED IN THE STATE OF OREGON AND SHALL BE SUBMITTED TO THE ENGINEER PRIOR TO FABRICATION. CALCULATIONS SHALL BE INCLUDED FOR ALL CONNECTIONS TO THE STRUCTURE, CONSIDERING LOCALIZED EFFECTS ON THE STRUCTURAL ELEMENTS INDUCED BY THE CONNECTION LOADS. DESIGN SHALL BE BASED ON THE REQUIREMENTS OF THE OSSC.

SHOP DRAWINGS WILL BE REVIEWED FOR GENERAL COMPLIANCE WITH THE DESIGN INTENT OF THE CONTRACT DOCUMENTS ONLY. IT SHALL BE THE RESPONSIBILITY OF THE CONTRACTOR TO VERIFY COMPLIANCE WITH THE CONTRACT DOCUMENTS AS TO QUANTITY, LENGTH, ELEVATIONS, DIMENSIONS, ETC. CONTRACTOR SHALL NOT BE RELIEVED FROM RESPONSIBILITY FOR ERRORS OR OMISSIONS IN SHOP DRAWINGS OR SUBMITTALS BY THE ENGINEER'S REVIEW.

BRACING AND SHORING

DURING CONSTRUCTION THE STABILITY AND INTEGRITY OF THE EXISTING STRUCTURES SHALL BE MAINTAINED AT LEVELS GENERALLY ACCEPTABLE WITHIN THE CONSTRUCTION INDUSTRY BY THE USE OF BRACING, SHORING AND UNDERPINNING UNTIL THE PROPOSED STRUCTURAL MODIFICATIONS ARE COMPLETED. IN NO CASE SHALL THE EXISTING STRUCTURE BE ALLOWED TO BECOME UNSAFE DURING CONSTRUCTION.

BRACING AND SHORING SYSTEMS REQUIRED TO PROVIDE TEMPORARY SUPPORT OF THE EXISTING STRUCTURE DURING CONSTRUCTION SHALL BE DESIGNED TO SUPPORT THE DEAD, LIVE, SOIL, EARTHQUAKE AND WIND LOADS THAT MAY BE IMPOSED ON THE STRUCTURE DURING CONSTRUCTION IN ACCORDANCE WITH INDUSTRY STANDARDS AND GENERALLY ACCEPTED ENGINEERING PRINCIPLES.

THE CONTRACTOR SHALL SUBMIT PROPOSED SHORING, BRACING AND UNDERPINNING SYSTEMS TO THE ENGINEER OF RECORD FOR REVIEW. THE CONTRACTOR SHALL BE RESPONSIBLE FOR THE SUCCESSFUL COMPLETION OF THE WORK.

NO CONSTRUCTION OF THE BRACING, SHORING OR UNDERPINNING SYSTEMS, DEMOLITION FOR ITS CONSTRUCTION OR ORDERING MATERIALS TAKE PLACE UNTIL THE CONTRACTOR HAS RECEIVED REVIEWED SUBMITTALS BY THE ENGINEER OF RECORD.

THE BRACING, SHORING AND UNDERPINNING SUBMITTALS SHOW LAYOUT, SIZE OF MEMBERS, CONNECTION DETAILS, CONSTRUCTION SEQUENCE AND STRUCTURAL CALCULATIONS PREPARED BY A REGISTERED CIVIL OR STRUCTURAL ENGINEER LICENSED IN THE STATE OF OREGON.

EQUIPMENT AND NON-STRUCTURAL COMPONENTS:

DETERMINE ACTUAL EQUIPMENT AND NON-STRUCTURAL COMPONENT WEIGHTS, LOCATIONS AND SIZES SUPPLIED FOR THIS PROJECT. NOTIFY ENGINEER IF WEIGHTS EXCEED ALLOWANCES AND IF EQUIPMENT FOOTPRINTS DIFFER FROM THAT SHOWN OR NOTED ON STRUCTURAL DRAWINGS.

FOR EQUIPMENT AND NON-STRUCTURAL COMPONENTS WEIGHING MORE THAN 400 POUNDS, PREPARE AND SUBMIT SEISMIC CONNECTION AND ANCHORAGE CALCULATIONS AND DETAIL SEALED AND SIGNED BY A PROFESSIONAL CIVIL OR STRUCTURAL ENGINEER REGISTERED IN THE STATE OF OREGON.

COORDINATE BETWEEN SUBCONTRACTORS TO INSURE THE FOLLOWING:

ADDITIONAL SECONDARY FRAMING IS PROVIDED AS REQUIRED. DESIGN OF EQUIPMENT SUPPORTS AND SECONDARY FRAMING BY THE VENDOR'S ENGINEER SHALL CONFORM TO OSSC REQUIREMENTS.

EDGES OF DECKING, SHEATHING, SLAB, ETC. ARE SUPPORTED AT ALL OPENINGS. PENETRATIONS MADE THROUGH STRUCTURAL MEMBERS SHALL BE REINFORCED TO CONFORM TO THE RECOMMENDATIONS OF THE VENDOR'S ENGINEER AND TO THE SATISFACTION OF THE ENGINEER OF RECORD.

OPENINGS, PENETRATIONS AND ACCESSORIES ARE LOCATED TO AVOID INTERFERENCE WITH STRUCTURAL ELEMENTS.

PRE-ENGINEERED ELEMENTS ARE DESIGN TO SUPPORT ALL WEIGHTS AND FORCES.

BRACE EQUIPMENT AND ACCESSORIES PER SMACNA SEISMIC RESTRAINT MANUAL. UNUSUAL DUCTWORK, PIPING OR CONDUIT CONFIGURATIONS THAT FALL OUTSIDE OF SMACNA MINIMUM LIMITS SHOULD BE SECURELY RESTRAINED TO PREVENT MOVEMENT.

BRACE SUSPENDED CEILINGS IN ACCORDANCE WITH ASTM E580.

90% SUBMITTAL

NO.	DATE	BY	REVISION

NOTICE
0 ½ 1
IF THIS BAR DOES NOT MEASURE 1" THEN DRAWING IS NOT TO SCALE

ATG DESIGNED
ATG DRAWN
PVM CHECKED

STRUCTURAL REGISTERED PROFESSIONAL ENGINEER OREGON JANUARY 14, 2003 ALLAN T GOFFE
PRELIMINARY ONLY
DO NOT USE FOR CONSTRUCTION
EXPIRES 6/30/2023

WEST YOST
Water. Engineered.

Sweet Home Oregon at its best!

MAHLER WATER RECLAMATION FACILITY IMPROVEMENTS PROJECT PHASE 1

SPECIAL INSPECTIONS AND STRUCTURAL NOTES

PROJECT NO.: | SCALE: NONE | DATE: JUNE 2022

SHEET S-002

Attachment C

City Standard Contract

City of Sweet Home
Personal Services Contract for
Goods and Special Services

This Contract is by and between the City of Sweet Home ("City") and _____ ("Contractor") for the performance of _____ services for City, on an as needed basis.

A. RECITALS

City has conducted a formal solicitation for proposals from integration firms pursuant to Public Contracting law.

Contractor submitted its proposal, having examined the Request for Proposals (RFP), and was chosen as the most highly qualified Contractor, best suited to meet City's needs pursuant to the RFP criteria.

City has awarded the contract to Contractor.

B. CONTRACT EXHIBITS

The following exhibits are hereby incorporated by reference into this Contract:

Exhibit A – Scope of Work
Exhibit B – Oregon Personal Services Public Contracting Code Requirements
Exhibit C – Request for Proposal
Exhibit D – Contractor's Proposal
Exhibit E – Contractor's Schedule of Rates and Charges

C. AGREEMENT

1. Term

The term of this Contract shall be from its execution through completion of the City of Sweet Home Mahler Water Reclamation Facility Improvements Project, Phases 1 and 2. Construction completion is currently scheduled for 2026.

2. Scope of Work

Contractor shall provide all services and deliver all materials as specified in the attached Exhibits A, C and D, which are hereby incorporated into this Contract by this reference, and as may be described by future addenda to this Contract.

3. Compensation

3.1 Compensation. For the services described and performed by Contractor, the City agrees to pay, and the Contractor agrees to accept, compensation in accordance with the Schedule of Rates and Charges, attached within Exhibit E.

3.2 Invoices. Invoices for services of Contractor shall be billed to the City in summary form, itemized by projects and/or work tasks, on or about the first day of each month for all services performed through the last day of the previous

month. Reimbursable expenses shall be itemized and backup invoices provided if required by City.

3.3 Payments.

a. City will review Contractor's invoice and within ten (10) days of receipt notify Contractor in writing if there is a disagreement or dispute with the invoice. If there are no such disputes with the invoice, City shall pay the invoice amount in full within thirty (30) days of invoice date.

b. If City fails to make any payment due Contractor for services and expenses within thirty (30) days of the date on Contractor's invoice therefore, late fees will be added to amounts due Contractor at the rate of 1.0 percent per month from original invoice date. Invoices in dispute are not subject to such late fees until such time as they are no longer in dispute. In addition, Contractor may, after giving seven (7) days written notice to City, suspend services under this Contract until Contractor has been paid in full all amounts due for services, expenses, and charges, except any invoices in dispute.

4. Contractor Is an Independent Contractor

Contractor shall be an independent contractor for all purposes and shall be entitled to no compensation other than the compensation provided for under this Contract. While City reserves the right to set various schedules and evaluate the quality of Contractor's completed work, City cannot and will not control the means and manner of Contractor's performance. Contractor is responsible for determining the appropriate means and manner of performing work. Contractor is responsible for all federal and state taxes applicable to compensation and payment paid to Contractor under the Contract and will not have any amounts withheld by City to cover Contractor's tax obligations. Contractor is not eligible for any City fringe benefit plans.

5. Notices

All notices provided for hereunder shall be in writing and shall be deemed to be duly served on the date of delivery if delivered in person, when receipt of transmission is generated by the transmitting facsimile machine if delivered by facsimile transmission, on the day after deposit if delivered by overnight courier, or three days after deposit if delivered by placing in the U.S. mail, first-class, postage prepaid. Any notice delivered by facsimile transmission shall be followed by a hard copy. All notices shall be addressed as follows:

City:	Public Works Department City of Sweet Home 1400 24th Avenue Sweet Home, OR 97386	Phone: Fax:	(541) 367-6359 (541) 367-7592

Contractor: _____ Phone: _____
_____ Fax: _____
_____

6. Indemnification

Contractor shall indemnify and hold harmless City and its representatives, officers, directors, and employees from any loss or claim made by third parties to the extent arising directly or indirectly from Contractor's negligent performance and/or fault of Contractor, its employees, representatives, or subcontractors. If the loss or claim is caused by the joint concurrent negligence or other fault of City and Contractor, the loss or claim shall be borne by each in proportion to the degree of negligence or other fault attributable to each.

For claims based upon professional negligence, Contractor's obligation to indemnify indemnitees for defense costs (as defined) is not immediate and shall be satisfied at the time of any settlement or judgment as to Contractor's indemnity obligations under this Agreement.

7. Insurance Requirements

7.1 During the term of this Contract, Contractor shall maintain, at its own expense, the following types of insurance in the following amounts:

a. Commercial General Liability insurance, including coverage for premises operations, independent contractors, protected products, completed operations, contractual liability, personal injury, and broad form for property damage (including coverage for explosion, collapse, and underground hazards, if applicable):

   $2,000,000 – each occurrence (bodily injury)
   $2,000,000 – general aggregate
   $2,000,000 – property damage, contractual, etc.
   $2,000,000 – umbrella liability coverage
   Coverage shall also include contractual liability coverage for the indemnity provided under this contract.

b. Automobile Liability insurance limit shall not be less than $1,000,000 combined single limit per accident.

c. Workers' Compensation and employer's liability insurance per ORS Chapter 656. The employer's liability limit shall not be less than $1,000,000 per occurrence.

d. Errors and Omissions insurance covering Contractor's liability arising out of negligent acts, errors or omissions in its performance of work or services under this Contract. Such policy will have a combined single limit of not less than $2,000,000 per each claim, incident or occurrence for the term of the Project. Such policy will be on a claims made basis and will have an extended claims reporting period of five (5) years after final completion.

e. The limits required in this Section 7.1 may be met with a combination of underlying and umbrella coverage.

7.2 Except as required in 7.1(d) above, if any of the above required insurance is arranged on a “claims made” basis, “tail” coverage will be required at final completion or termination of this Contract for a duration of two (2) years.

7.3 Policies shall provide that City, its council, officers, representatives, employees, and agents will be included as an additional insured with respect to the coverages required in Section 7.1(a) and a waiver of subrogation against them shall be obtained for all coverages.

7.4 All coverages under Section 7.1 shall be primary over any insurance City may carry on its own.

7.5 City shall be solely responsible for any loss, damage or destruction to its own property, equipment, and materials used in conjunction with the work or services under this Contract.

7.6 All policies of insurance shall be issued by good, responsible companies, with a rating reasonably acceptable to City and that are qualified to do business in the state of Oregon.

7.7 Contractor shall furnish City with certificates of insurance evidencing all required coverages prior to commencing any work or services under this Contract. If requested by City, Contractor shall furnish City with executed copies of such policies of insurance. Contractor shall furnish City with at least 30 days’ written notice of cancellation of, or any modification to, the required insurance coverages. Failure to maintain any required insurance coverages in the minimum required amounts shall constitute a material breach of this Contract and shall be grounds for immediate termination of this Contract.

7.8 All liability insurance, except for Workers’ Compensation, Professional Liability, and Network Security and Privacy Liability (if applicable), required under this Contract must include an additional insured endorsement with the certificate of insurance specifying the City of Sweet Home, its officers, employees and agents as Additional Insureds, including additional insured status with respect to liability arising out of ongoing operations and completed operations, but only with respect to Contractor's activities to be performed under this Contract. Coverage shall be primary and non-contributory with any other insurance and self-insurance. The Additional Insured endorsement with respect to liability arising out of your ongoing operations must be on ISO Form CG 20 10 07 04 or equivalent and the Additional Insured endorsement with respect to completed operations must be on ISO form CG 20 37 04 13 or equivalent and attached to Certificate of Insurance.

8. Workers’ Compensation

8.1 Contractor, its subcontractors, if any, and all employers working under this Contract are subject employers under the Oregon Workers’ Compensation Law and shall comply

with ORS 656.017, which requires them to provide workers' compensation coverage for all subject workers.

8.2 Contractor warrants that all persons engaged in Contract work and subject to the Oregon Workers' Compensation Law are covered by a workers' compensation plan or insurance policy that fully complies with Oregon law. Contractor shall indemnify City for any liability incurred by City as a result of Contractor's breach of the warranty under this paragraph.

9. Hours of Employment

Contractor shall comply with all applicable state and federal laws regarding employment.

10. Assignments and Subcontractors

Contractor may not assign or subcontract any of its responsibilities under this Contract without City's prior written consent. Contractor's assigning or subcontracting of any of its responsibilities under the Contract without City's consent shall constitute a material breach of this Contract. Regardless of any assignment or subcontract, Contractor shall remain liable for all of its obligations under this Contract.

11. Labor and Material

Contractor shall provide and pay for all labor, materials, equipment, tools, water, heat, utilities, transportation, and other facilities and services necessary for the proper execution and completion of all Contract work, all at no cost to City other than the compensation provided in this Contract.

12. Ownership of Work and Documents

All work performed by Contractor and compensated by City pursuant to this Contract shall be the property of City upon full compensation for that work performed or document produced to Contractor, and it is agreed by the parties that such documents are works made for hire. Contractor hereby conveys, transfers and grants to City all rights of reproduction and the copyright to all such documents. City shall not be limited in any way in its use of the Documents and Data at any time, provided that any such use not within the purposes intended by this Agreement shall be at City's sole risk.

13. Termination for Convenience

13.1 This Contract may be terminated by mutual consent of the parties upon written notice. In addition, City may terminate all or part of this Contract upon determining that termination is in the best interest of City by giving seven (7) days' prior written notice of intent to terminate, without waiving any claims or remedies it may have against Contractor. Upon termination under this paragraph, Contractor shall be entitled to payment in accordance with the terms of this Contract for Contract work completed and accepted before termination less previous amounts paid and any claim(s) City has against Contractor. Pursuant to this paragraph, Contractor shall submit an itemized invoice for all unreimbursed Contract work completed before termination and all Contract closeout costs actually incurred by Contractor. City shall not be liable for any costs

invoiced later than thirty (30) days after termination unless Contractor can show good cause beyond its control for the delay.

13.2 City may unilaterally order Contractor to suspend all or part of the services under this Contract. If City suspends certain services under this Contract and later orders Contractor to resume those services, Contractor will be entitled to reimbursements for the costs actually and reasonably incurred, if any, in re-starting the suspended services.

14. Termination for Cause

City may terminate this Contract effective upon delivery of written notice to Contractor, or at such later date as may be established by City, under any of the following conditions:

14.1 If City funding is not obtained and continued at levels sufficient to allow for purchases of the indicated quantity of services. The Contract may be modified to accommodate a reduction in funds.

14.2 If federal or state regulations or guidelines are modified, changed, or interpreted in such a way that the services are no longer allowable or appropriate for purchase under this Contract or are no longer eligible for the funding proposed for payments authorized by this Contract.

14.3 If any license or certificate required by law or regulation to be held by Contractor to provide the services required by this Contract is for any reason denied, revoked, or not renewed.

15. **Termination for Default**

Either City or Contractor may terminate this Contract in the event of a breach of the Contract by the other. Prior to such termination, the party seeking termination shall give to the other party written notice of the breach and intent to terminate. If the party committing the breach has not entirely cured the breach within fifteen (15) days of the date of the notice, then the party giving the notice may terminate the Contract at any time thereafter by giving a written notice of termination.

If Contractor fails to perform in the manner called for in this Contract or if Contractor fails to comply with any other provisions of the Contract, City may terminate this Contract for default. Termination shall be effected by serving a notice of termination on Contractor setting forth the manner in which Contractor is in default. Contractor shall be paid the Contract price only for services performed in accordance with the manner of performance as set forth in this Contract.

16. Remedies

In the event of breach of this Contract the parties shall have the following remedies:

16.1 If terminated under paragraph 15 by City due to a breach by Contractor, City may complete the work either itself, by agreement with another contractor, or by a combination thereof. If the cost of completing the work exceeds the remaining unpaid balance of the total compensation provided under this Contract, then Contractor shall pay to City the amount of the reasonable excess.

16.2 In addition to the above remedies for a breach by Contractor, City also shall be entitled to any other equitable and legal remedies that are available.

16.3 If City breaches this Contract, Contractor's remedy shall be limited to termination of the Contract and receipt of Contract payments to which Contractor is entitled.

16.4 City shall not be liable for any indirect, incidental, consequential, or special damages under the Contract or any damages arising solely from terminating the Contract in accordance with its terms.

16.5 Upon receiving a notice of termination, and except as otherwise directed in writing by City, Contractor shall immediately cease all activities related to the services and work under this Contract. As directed by City, Contractor shall, upon termination, deliver to City all then existing work product that, if the Contract had been completed, would be required to be delivered to City.

17. Nondiscrimination

During the term of this Contract, Contractor shall not discriminate against any employee or applicant for employment on the basis of any protected class as defined in ORS279A.112(b).

18. Governing Law; Jurisdiction; Venue

This Contract shall be governed by and construed in accordance with the laws of the state of Oregon without regard to principles of conflicts of law. Any claim, action, suit or proceeding (collectively "Claim") between City and Contractor that arises from or relates to this Contract which results in litigation shall be brought and conducted solely and exclusively within the Circuit Court of Linn County for the state of Oregon; provided, however, if a Claim must be brought in a federal forum, then it shall be brought and conducted solely and exclusively within the United States District Court for the District of Oregon. CONTRACTOR BY EXECUTION OF THIS CONTRACT, HEREBY CONSENTS TO THE IN PERSONAM JURISDICTION OF SAID COURTS. Nothing herein shall be construed as a waiver of City's protections under the Oregon Tort Claims Act.

19. Compliance with Laws and Regulations

Contractor shall comply with all federal, state and local laws, regulations, executive orders and ordinances applicable to the services under this Contract. Without limiting the generality of the foregoing, Contractor expressly agrees to comply with: (i) ORS 659a.142; (ii) all regulations and administrative rules established pursuant to the foregoing laws; and (iii) City's performance under this Contract is conditioned upon Contractor's compliance with all applicable provisions of the Oregon Public Contracting Code, as more particularly set forth in Exhibit B and incorporated herein by this reference. Contractor, its sub-consultants and all employers providing work, labor or materials under this Contract are subject employers under the Oregon workers' compensation law and shall comply with ORS 656.017, which requires them to provide Oregon workers' compensation coverage that satisfies Oregon law for all their subject workers. Contractor shall adhere to all safety standards and regulations established by City for work performed on its premises or under its auspices.

20. Experience, Capabilities and Resources

By execution of this Contract, the Contractor agrees that:

Contractor is an experienced integration firm having the skill, legal capacity, and professional ability necessary to perform all the services required under this Contract to design or administer any work within the scope and complexity contemplated by this Contract.

Contractor has the capabilities and resources necessary to perform the obligations of this Contract.

Contractor is familiar with all current laws, rules, and regulations which are applicable to the design and construction of work which may fall within the scope of this Contract, and that all drawings, specifications, and other documents prepared by Contractor shall be prepared in a manner consistent with the professional skill and care ordinarily provided by firms practicing in the same or similar locality under the same or similar circumstances (herein the “Standard of Care”) and shall exercise the Standard of Care in complying with applicable and non-conflicting laws, rules, and regulations.

21. Drawings, Specifications and Other Documents

Contractor hereby agrees that it will, in a manner consistent with its standard of care defined in above in Section 20, prepare all drawings, specifications, and other documents pursuant to this Contract so that they are complete and that any project, if constructed in accordance with the intent established by such drawings, specifications, and other documents, shall be structurally sound and a complete and properly functioning facility.

22. Errors and Omissions

Contractor shall be responsible for correcting any errors or omissions in the drawings, specifications, and/or other documents which deviate from the standard of care set forth in Section 21. Contractor shall correct at no additional cost to City any and all such errors and omissions in the drawings, specifications, and other documents prepared by Contractor or its sub-consultants. Contractor further agrees to assist City in resolving problems relating to any project designs or specified materials that are caused by deviations from the Standard of Care

23. Contract Performance

Contractor shall at all times carry on the services diligently, without delay and punctually fulfill all requirements herein. Contractor shall not be liable for delays that are beyond Contractor’s control. Contract expiration shall not extinguish, prejudice, or limit either party's right to enforce this Contract with respect to any breach of Contractor’s warranties or a default or defect in performance by Contractor that has not been cured.

24. Access to Records

For not less than three (3) years after the Contract expiration and for the purpose of making audit, examination, excerpts, and transcripts, City, and its duly authorized representatives shall have access to Contractor's books, documents, papers, and records that are pertinent to this Contract. If, for any reason, any part of this Contract, or any resulting construction contract(s) is involved in litigation, Contractor shall retain all pertinent records for not less than three years or until all litigation is resolved, whichever is longer. Contractor shall provide full access to these records to City, and City's duly authorized representatives in preparation for and during litigation.

25. Representations and Warranties

Contractor represents and warrants to City that (1) Contractor has the power and authority to enter into and perform this Contract, (2) when executed and delivered, this Contract shall be a valid and binding obligation of Contractor enforceable in accordance with its terms, (3) Contractor shall, at all times during the term of this Contract, be duly licensed to perform the services, and if there is no licensing requirement for the profession or services, be duly qualified and competent, (4) the services under this Contract shall be performed in accordance with the professional skill, care and standards ordinarily used by professionals performing similar services under similar conditions. No other warranties are expressed or implied in this Agreement.

26. City Obligations

26.1 City shall provide full information in a timely manner regarding requirements for and limitations on projects and work tasks. With regard to subcontractor liens, City shall furnish to Contractor, within fifteen (15) days after receipt of a written request, information necessary and relevant for Contractor to evaluate, give notice of, or enforce lien.

26.2 City shall establish and update, if necessary, overall project budgets, including consulting and construction costs.

26.3 City shall furnish the services of consultants, when such services are requested by Contractor, reasonably required by the scope of a project, and agreed to by City.

26.4 City shall furnish all testing as required by law or the contract documents.

26.5 City shall furnish all legal accounting, auditing and insurance services as necessary for projects to meet the City's needs and interests, after Contractor has performed requisite project management and oversight duties.

26.6 City shall provide prompt written notice to Contractor if City becomes aware of any fault or defect in a project, including any errors, omissions or inconsistencies in Contractor's design or performance under the contract.

26.7 City shall pay Contractor in accordance with paragraph 3 and Exhibit E of this Contract, upon receipt of Contractor's submission of monthly invoices, and satisfactory progress and performance made in accordance with the scope of work. Payments shall reflect work completed, or progress made on a project to date, on a pro rata basis.

26.8 City shall report the total amount of all payments to Contractor, including any expenses, in accordance with federal Internal Revenue Service and State of Oregon Department of Revenue regulations.

26.9 City shall guarantee access to, and make all provisions for Contractor to enter upon public and private property necessary for performance of the Scope of Work over which City exercises control.

26.10 Extra work or work on contingency tasks is not permitted unless authorized by the City in writing. Failure of Contractor to secure written authorization for extra work shall constitute a waiver of all rights to an adjustment in the Agreement price or Agreement time.

27. Arbitration

All claims, disputes, and other matters in question between the City and Contractor arising out of, or relating to this Contract, including rescission, reformation, enforcement, or the breach thereof except for claims which may have been waived by the making or acceptance of final payment, may be decided by binding arbitration in City's sole discretion, in accordance with Uniform Oregon Arbitration Act ORS 36.600 et seq. and any additional rules mutually agreed to by both parties. If the parties cannot agree on rules within ten (10) days after the notice of demand, the presiding judge of the Linn County Circuit Court will establish rules to govern the arbitration. The City shall have the sole discretion as to whether or not dispute will be decided by arbitration rather than through the court process.

A claim by Contractor arising out of, or relating to this Contract must be made in writing and delivered to the City Manager not less than 30 days after the date of the occurrence giving rise to the claim. Failure to file a claim with the City Manager within 30 days of the date of the occurrence that gave rise to the claim shall constitute a waiver of the claim. A claim filed with the City Manager will be considered by the City Council at the Council's next regularly scheduled meeting. At that meeting the Council will render a written decision approving or denying the claim. If the claim is denied by the Council, the Contractor may file a written request for arbitration with the City Manager. No demand for arbitration shall be effective until the City Council has rendered a written decision denying the underlying claim. No demand for arbitration shall be made later than thirty (30) days after the date on which the City has rendered a written decision on the underlying claim. The failure to demand arbitration within said 30 days shall result in the City Council's decision being binding upon the City and Contractor.

Notice of demand for arbitration shall be filed in writing with the other party to the agreement. The demand for arbitration shall be made within the 30-day period specified above. The City, if not the party demanding arbitration, has the option of allowing the matter to proceed with binding arbitration or by written notice within five (5) days after receipt of a demand for arbitration, to reject arbitration and require the Contractor to proceed through the courts for relief. If arbitration is followed, the parties agree that the award rendered by the arbitrators will be final, judgment may be entered upon it in any court having jurisdiction thereof, and will not be subject to modifications or appeal except to the extent permitted by Oregon law.

28. Attorney Fees

If suit, action or arbitration is brought either directly or indirectly to rescind, reform, interpret or enforce the terms of this contract to the extent due to the negligent performance of the Contractor's employees, representatives or subcontractors, the prevailing party shall recover and the losing party hereby agrees to pay reasonable attorney's fees incurred in such proceeding, in both the trial and appellate courts, as well as the costs and disbursements. Further, if it becomes necessary for City to incur the services of an attorney to enforce any provision of this contract without initiating litigation, Contractor agrees to pay City's attorney's fees so incurred. Such costs and fees shall bear interest at the maximum legal rate from the date incurred until the date paid by losing party.

29. Successors and Assigns

The provisions of this Contract shall be binding upon and shall inure to the benefit of the parties hereto, and their respective successors and assigns.

30. Limitation of Liabilities

City shall not be liable for (i) any indirect, incidental, consequential, or special damages under the Contract or (ii) any damages of any sort arising solely from the termination of this Contract in accordance with its terms. Contractor shall not be liable for any consequential damages under this Contract.

31. Foreign Contractor

If Contractor is not domiciled in or registered to do business in the state of Oregon, Contractor shall promptly provide to the Oregon Department of Revenue and the Secretary of State Corporation Division all information required by those agencies relative to this Contract. Contractor shall demonstrate its legal capacity to perform the work under this Contract in the state of Oregon prior to entering into this Contract.

32. Confidentiality

Contractor shall maintain the confidentiality of any of City's information that has been so marked as confidential, unless withholding such information would violate the law, create the risk of significant harm to the public or prevent Contractor from establishing a claim or defense in an adjudicatory proceeding. Contractor shall require similar agreements from City's and/or Contractor's sub-consultants to maintain the confidentiality of information of City.

33. Force Majeure

Contractor shall not be deemed in default hereof nor liable for damages arising from its failure to perform its duties or obligations hereunder if such is due to causes beyond its reasonable control, including, but not limited to, acts of God, acts of civil or military authorities, fires, floods, windstorms, earthquakes, strikes or other labor disturbances, civil commotion or war, epidemics, pandemics, declared states of emergency, closing or reduction of force by the contractors or governmental permit reviewing entities, the enactment of governmental actions which cause delays or limit travel..

34. Waivers

No waiver by City of any provision of this Contract shall be deemed to be a waiver of any other provision hereof or of any subsequent breach by Contractor of the same or any other provision. City's consent to or approval of any act by Contractor requiring City's consent or approval shall not be deemed to render unnecessary the obtaining of City's consent to or approval of any subsequent act by Contractor, whether or not similar to the act so consented to or approved.

35. Severability

Any provision of this Contract which shall prove to be invalid, void or illegal shall in no way affect, impair or invalidate any other provision hereof, and such remaining provisions shall remain in full force and effect.

36. Survival

All provisions of this Agreement that would reasonably be expected to survive the termination of this Agreement will do so.

37. Headings

The captions contained in this Contract are for convenience only and shall not be considered in the construction or interpretation of any provision hereof.

38. Integration and Modification

This Contract, including the attached exhibits referenced in Section B, contains the entire agreement between the parties regarding the matters referenced herein and supersedes all prior written or oral discussions or agreements regarding the matters addressed by this Contract. Any modifications or amendments to this Contract will only be effective when made in writing and signed by authorized parties for each party to this Contract.

39. Authority

The representatives signing on behalf of the parties certify that they are duly authorized by the party for which they sign to make this Contract.

40. Certificate of Compliance with Oregon Tax Laws

By executing this Contract, Contractor certifies under penalty of perjury that Contractor is, to the best of Contractor's knowledge, not in violation of any Oregon tax laws described in ORS 305.385(6) and (7).

41. Time is of the Essence

Time is of the essence under this Contract.

CITY OF SWEET HOME

By:_____

Name: Christy Wurster

Title: City Manager Pro Tem

Date: _____

Authorized & Approved by the City Council.
City Manager approves contract.

Approved as to form.

By:_____

Name: Robert Snyder

Title: City Attorney

Date: _____

CONTRACTOR

By:_____
Authorized Signature

Name: _____

Title: _____

Date: _____

Exhibit A

Scope of Work

SERVICES AND RESPONSIBILITY OF CONTRACTOR

Provide Special Inspections and Testing Services for the Sweet Home Mahler Water Reclamation Facility Phases 1 and 2 in Sweet Home, Oregon.

Exhibit B

Oregon Public Contracting Requirements

ORS CHAPTERS 279B AND 279C REQUIREMENTS

(1) Consultant shall pay promptly, as due, all persons supplying labor or materials for the prosecution of the work provided for in the contract, and shall be responsible for such payment of all persons supplying such labor or material to any Subcontractor.

(2) Consultant shall promptly pay all contributions or amounts due the Industrial Accident Fund from such Consultant or Subcontractor incurred in the performance of the contract.

(3) Consultant shall not permit any lien or claim to be filed or prosecuted against the City on account of any labor or material furnished and agrees to assume responsibility for satisfaction of any such lien so filed or prosecuted.

(4) Consultant and any Subcontractor shall pay to the Department of Revenue all sums withheld from employees pursuant to ORS 316.617.

(5) If Consultant fails, neglects or refuses to make prompt payment of any claim for labor or materials furnished to the Consultant or a Subcontractor by any person in connection with the contract as such claim becomes due, the City may pay such claim to the persons furnishing the labor or material and charge the amount of payment against funds due or to become due Consultant by reason of the contract. The payment of a claim in the manner authorized hereby shall not relieve the Consultant or his surety from his or its obligation with respect to any unpaid claim. If the City is unable to determine the validity of any claim for labor or material furnished, the City may withhold from any current payment due Consultant an amount equal to said claim until its validity is determined and the claim, if valid, is paid.

(6) Consultant shall promptly, as due, make payment to any person, copartnership, association, or corporation, furnishing medical, surgical and hospital care or other needed care and attention, incident to sickness or injury, to employees of such Consultant, of all sums which the Consultant agrees to pay for such services and all monies and sums which the Consultant collected or deducted from the wages of employees pursuant to any law, contract or agreement for the purpose of providing or paying for such service.

(7) Consultant shall pay Consultant’s employees who work under the public contract at least time and a half for all overtime the employees work in excess of 40 hours in any one week, except for employees under a personal services public contract who are excluded under ORS 653.010 to 653.261 or under 29 U.S.C. 201 to 209 from receiving overtime.

(8) The Consultant must give notice to employees who work on this contract in writing, either at the time of hire or before commencement of work on the contract, or by posting a notice in a location frequented by employees, of the number of hours per day and the days per week that the employees may be required to work.

(9) All subject employers working under the Consultant are either employers that will comply with ORS 656.017, or employers that are exempt under ORS 656.126.

(10) All sums due the State Unemployment Compensation Fund from the Consultant or any Subcontractor in connection with the performance of the contract shall be promptly so paid.

(11) The contract may be canceled at the election of City for any willful failure on the part of Consultant to faithfully perform the contract according to its terms.

(12) Consultant certifies compliance with all applicable Oregon tax laws, in accordance with ORS 305.385.

(13) Consultant certifies that it has not discriminated against minorities, women or emerging small business enterprises in obtaining any required subcontractors.

Exhibit C

Request for Proposals

Exhibit D

Contractor's Proposal

Exhibit E

Contractor's Schedule of Rates and Charges

REQUEST FOR COUNCIL ACTION

Title:	Northside Park Property Line Adjustments
Preferred Agenda:	August 9, 2022
Submitted By:	Angela Clegg, Associate Planner
Reviewed By:	Blair Larsen CEDD Director Christy Wurster, City Manager Pro Tem
Type of Action:	Resolution ____ Motion _X_ Roll Call ____ Other ____
Relevant Code/Policy:	SHMC 16.32 Property Line Adjustment
Towards Council Goal:	Goal 2.1: Update and streamline processes
Attachments:	Applications PLA22-11, PLA22-12, PLA22-13, PLA22-14, PLA22-15

Purpose of this RCA:

Request for City Council to approve Northside Park Property Line Adjustments.

Background/Context:

According to the FY2019-2024 Sweet Home Park Capital Improvement Plan, revised December 14, 2018, Northside Park does not have a specific Concept Plan. However, development elements were identified provided funding became available.

In March 2021, staff became aware of a private donor wanting to install a dog park in the City of Sweet Home. Staff asked the donor if Northside Park would be a desirable location and the donor agreed to the location.

It was determined at the January 13, 2022 Park and Tree Committee meeting that the 2022-2023 Parks budget focus on improving Northside Park. Northside Park is currently 6 separate tax lots. To complete projects according to City Code staff has prepared a series of Property Line Adjustments that would make Northside Park one tax lot when complete. The same process was done at Sankey Park to allow for development to be done according to code.

Without the proposed Property Line Adjustments, development may violate the standards of Title 16 and 17 and applicable building code. The current development is considered preexisting, nonconforming, however any new development may cause further deviation from the development code. SHMC 16.32.020(B) The adjusted properties are not reduced below the minimum standards of the zoning district and do not otherwise violate standards of this title or Title 17 or any applicable building code.

The Challenge/Problem:

Northside Park is made up of six separate legal parcels of record. Staff found it difficult and confusing when permitting for development projects in Sankey Park and anticipates the same

issues at Northside Park once development begins. Some projects may cross multiple lot lines. This property line adjustment will simplify deliveries, site planning and permitting.

Due to the number of parcels that make up the park, references in site plans and permitting could get mislabeled. Reducing the number of parcels would improve and simplify all development and grant application processes.

Stakeholders:

- *Sweet Home City Council.* As the owner of the properties, the City of Sweet Home, through its elected representatives, the City Council, is responsible for any land use applications affecting the properties. In addition, the Council has set goals mandating that the City operate in a more efficient and effective manner.
- *City of Sweet Home Staff.* Staff will benefit from condensing the number of parcels in Northside Park from 6 down to one, as it will simplify grant applications, site planning, deliveries, and permitting processes, as well as reduce the risk of mistakes in those processes.
- *Contractors, Subcontractors and Inspectors.* The work these individuals perform will be simplified by having fewer parcels to account for.
- *City of Sweet Home Residents.* Sweet Home residents deserve good parks, and to have their tax dollars well managed, both of which will be improved by combining the parcels that make up Northside Park.

Issues and Financial Impacts:

City of Sweet Home – Combining six tax lots into one tax lot will require filing recording documents with the county. We anticipate that the fees will be under $500.

Elements of a Stable Solution:

Combining the parcels would streamline and simplify the Northside Park development process.

Options:

1. *Do Nothing*. Leave the park as six parcels.
2. *Approve and authorize the City Manager to sign Applications PLA22-11, PLA22-12, PLA22-13, PLA22-14 and PLA22-15 as presented*.
3. *Recommend a different configuration of property lines for Northside Park.* Staff would take these recommendations and revise the proposed property line adjustment map for review at a future Council meeting.

Recommendation:

Staff recommends option 2, *Motion to approve and authorize the City Manager to sign Applications PLA22-11, PLA22-12, PLA22-13, PLA22-14 and PLA22-15 as presented*. The property line adjustment would simplify and streamline future park improvement projects.

Northside Park Property Line Adjustments
Existing Properties before PLA's

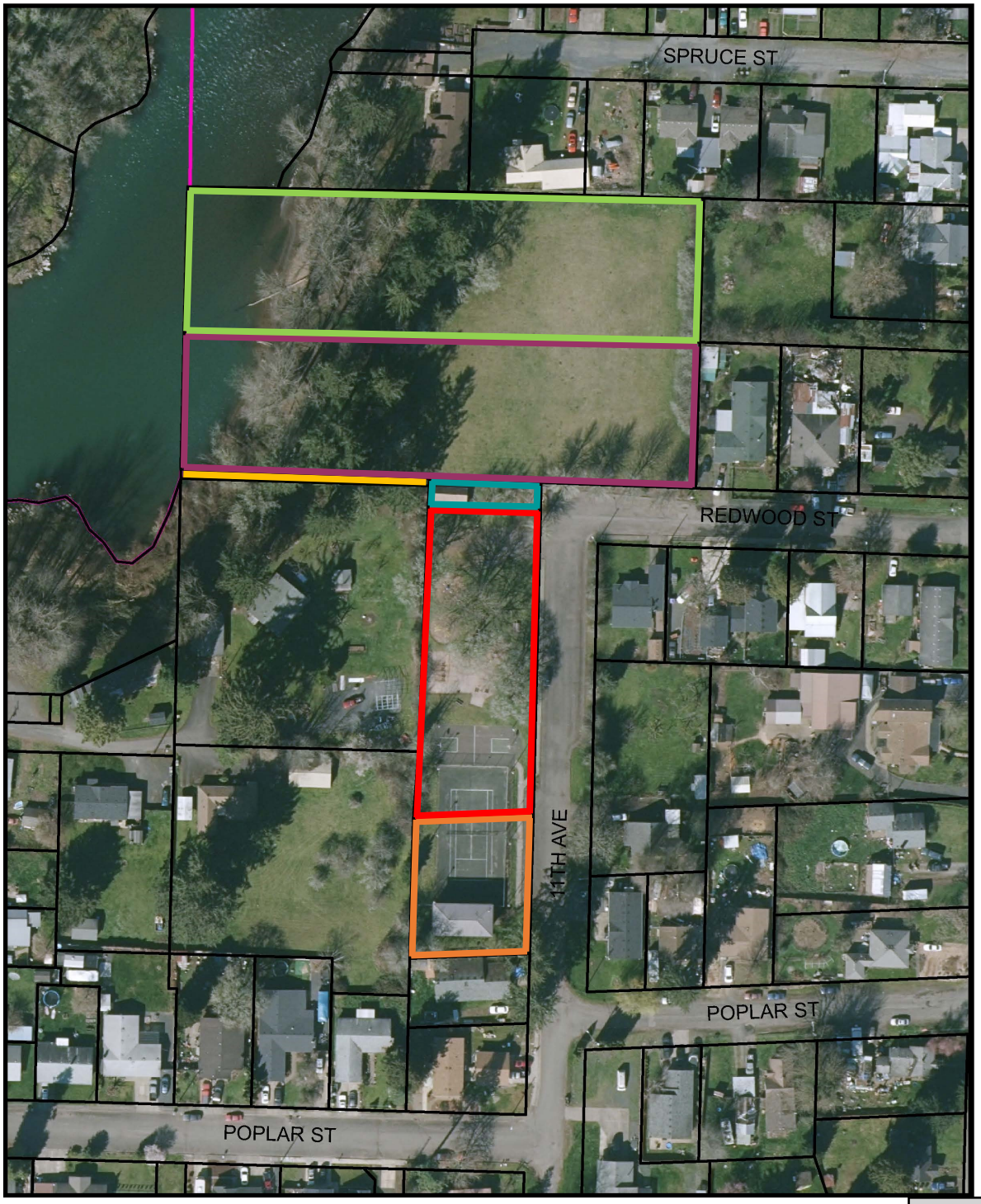

Legend

Tax lots

PIN

- 13S01E31AB02300
- 13S01E31AB01500
- 13S01E31AB08100
- 13S01E31AB08000
- 13S01E31AB01301
- 13S01E31AB01201

N

600 300 0 600

1 inch = 600 feet

City of Sweet Home
Community and Economic Development Department- Planning Program
3225 Main Street, Sweet Home, OR 97386 541-367-8113

Application for a Property Line Adjustment or a Property Line Adjustment / Replat

Date Received: _____
Date Complete: _____
File Number: PLA22-11
Application Fee $: ~~$160.00/$200.00~~
Receipt #: _____

Applicant's Name:
The City of Sweet Home

Applicant's Address:
3225 Main Street, Sweet Home, OR 97386

Applicant's Phone and e-mail:
541-367-8113, aclegg@sweethomeor.gov

Within 30 days following the filing of this application, the City Planner will make a determination of completeness regarding the application. If deemed complete, the application will be processed.

Property A

Owner's Name:
City of Sweet Home

Owner's Address:
3225 Main Street, Sweet Home, OR 97386

Owner's Phone and e-mail:
541-367-8113, aclegg@sweethomeor.gov

Property Address:
1712 11th Avenue, Sweet Home, OR 97386

Assessor's Map and Tax Lot:
13S01E31AB 2300

Property Size Before: 12,392 SF
Property Size After: 0 SF

Zoning Classification
R-1

Property B

Owner's Name:
City of Sweet Home

Owner's Address:
3225 Main Street, Sweet Home, OR 97386

Owner's Phone and email:
541-367-8113, aclegg@sweethomeor.gov

Property Address:
1780 11th Avenue, Sweet Home, OR 97386

Assessor's Map and Tax Lot:
13S01E31AB 1500

Property Size Before: 26,374 SF
Property Size After: 38,766 SF

Zoning Classification:
R-1

Submittal Requirements

The checklist on the other side of this application lists the required items must be submitted with this application and the Criteria the request must meet. Please address all items that apply to this request.

I certify that the statements contained on this application, along with the submitted materials, are in all respects true and are correct to the best of my knowledge and belief.

Applicant's Signature: _____ Date: _____

Property Owner's Signature: _____ Date: _____

Property Owner's Signature: _____ Date: _____

Property Owner's Signature: _____ Date: _____

Property Owner's Signature: _____ Date: _____

Northside Park Property Line Adjustment
Existing Property Lines
PLA22-11

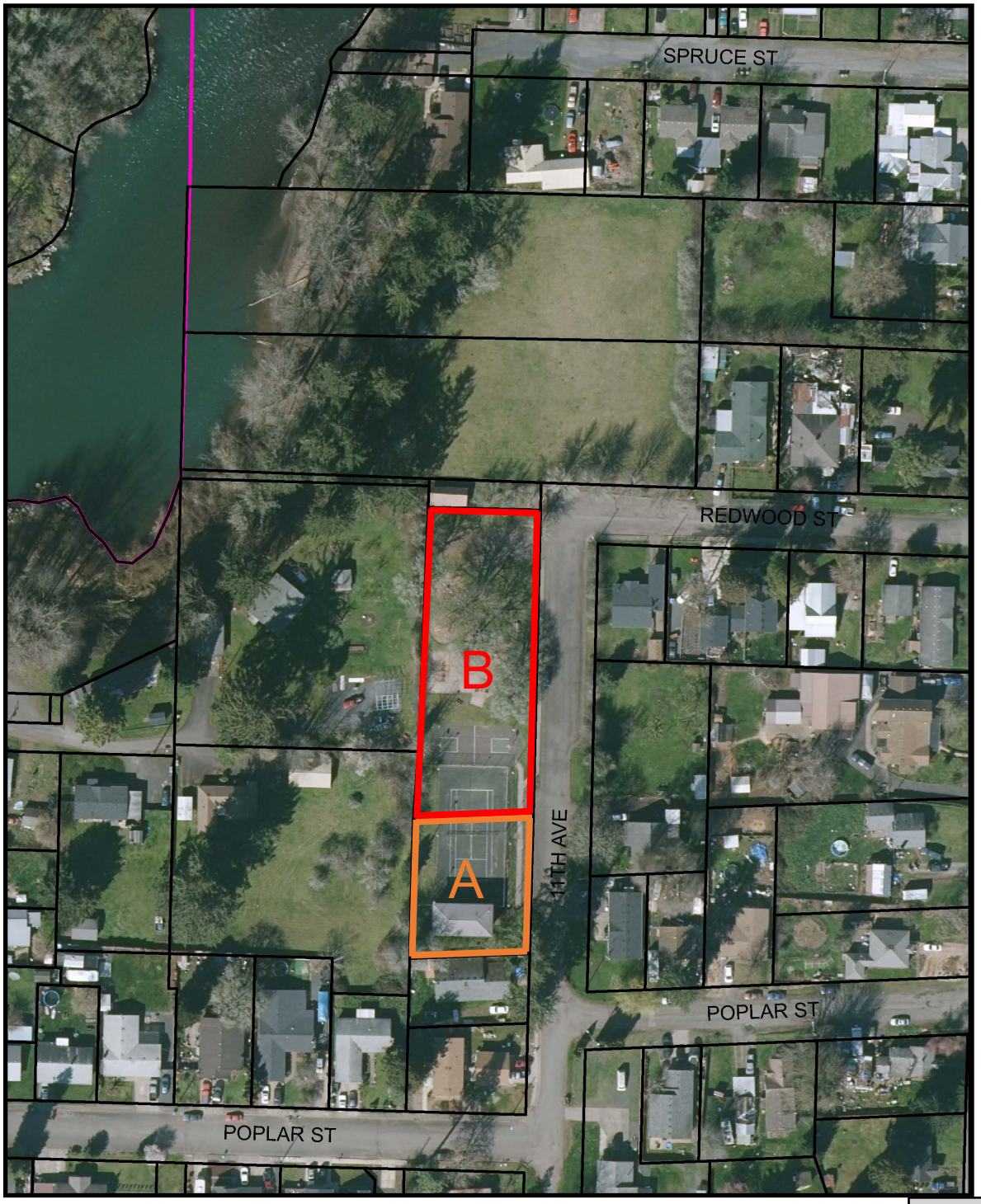

Legend

Tax lots

PIN

13S01E31AB02300

13S01E31AB01500

N

600 300 0 600

1 inch = 600 feet

Northside Park Property Line Adjustment
PLA22-11

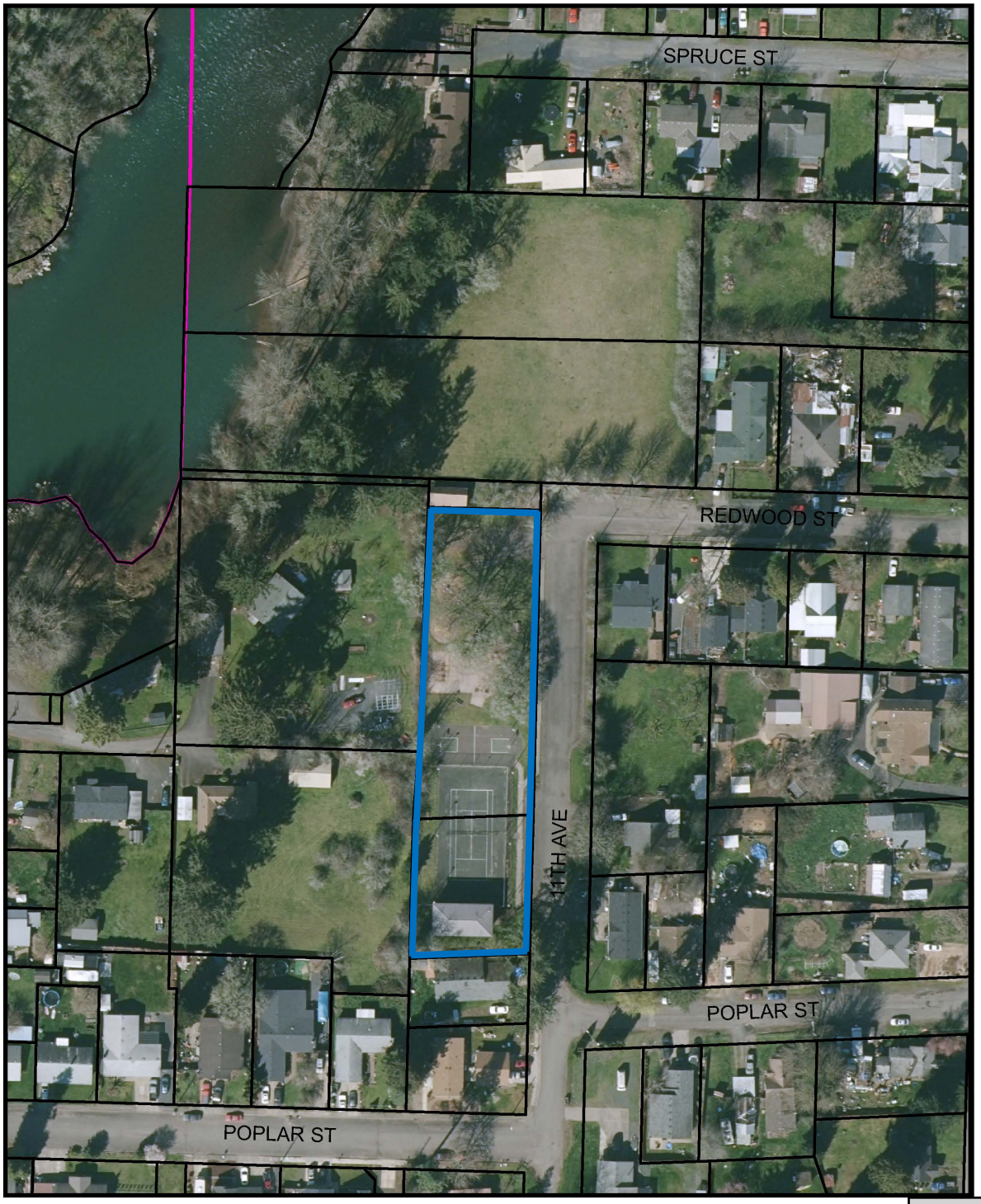

Legend

Tax lots

PIN

1st Merge

N

600 300 0 600

1 inch = 600 feet

City of Sweet Home
Community and Economic Development Department- Planning Program
3225 Main Street, Sweet Home, OR 97386 541-367-8113

Application for a Property Line Adjustment or a Property Line Adjustment / Replat

Date Received: _____
Date Complete: _____
File Number: PLA22-11
Application Fee $: ~~$160.00/$200.00~~
Receipt #: _____

Applicant's Name:
The City of Sweet Home

Applicant's Address:
3225 Main Street, Sweet Home, OR 97386

Applicant's Phone and e-mail:
541-367-8113, aclegg@sweethomeor.gov

Within 30 days following the filing of this application, the City Planner will make a determination of completeness regarding the application. If deemed complete, the application will be processed.

Property A

Owner's Name:
City of Sweet Home

Owner's Address:
3225 Main Street, Sweet Home, OR 97386

Owner's Phone and e-mail:
541-367-8113, aclegg@sweethomeor.gov

Property Address:
1712 11th Avenue, Sweet Home, OR 97386

Assessor's Map and Tax Lot:
13S01E31AB 2300

Property Size Before: 12,392 SF
Property Size After: 0 SF

Zoning Classification
R-1

Property B

Owner's Name:
City of Sweet Home

Owner's Address:
3225 Main Street, Sweet Home, OR 97386

Owner's Phone and email:
541-367-8113, aclegg@sweethomeor.gov

Property Address:
1780 11th Avenue, Sweet Home, OR 97386

Assessor's Map and Tax Lot:
13S01E31AB 1500

Property Size Before: 26,374 SF
Property Size After: 38,766 SF

Zoning Classification:
R-1

Submittal Requirements

The checklist on the other side of this application lists the required items must be submitted with this application and the Criteria the request must meet. Please address all items that apply to this request.

I certify that the statements contained on this application, along with the submitted materials, are in all respects true and are correct to the best of my knowledge and belief.

Applicant's Signature: _____ Date: _____

Property Owner's Signature: _____ Date: _____

Property Owner's Signature: _____ Date: _____

Property Owner's Signature: _____ Date: _____

Property Owner's Signature: _____ Date: _____

Northside Park
Existing Property Lines
PLA22-12

Legend

Tax lots

PIN

13S01E31AB 2300, 1500

13S01E31AB08100

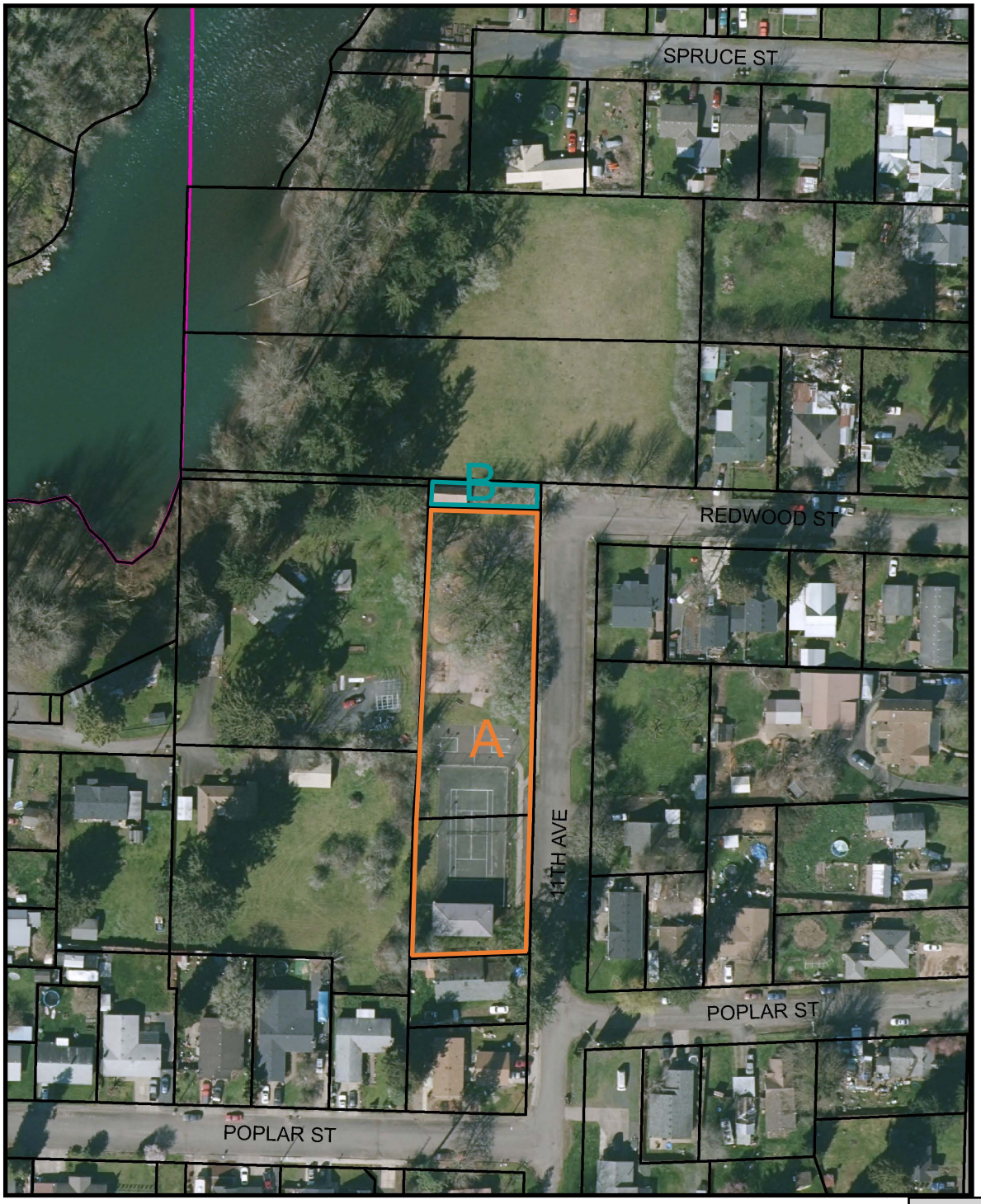

N

600 300 0 600

1 inch = 600 feet

Northside Park Property Line Adjustments
PLA22-12

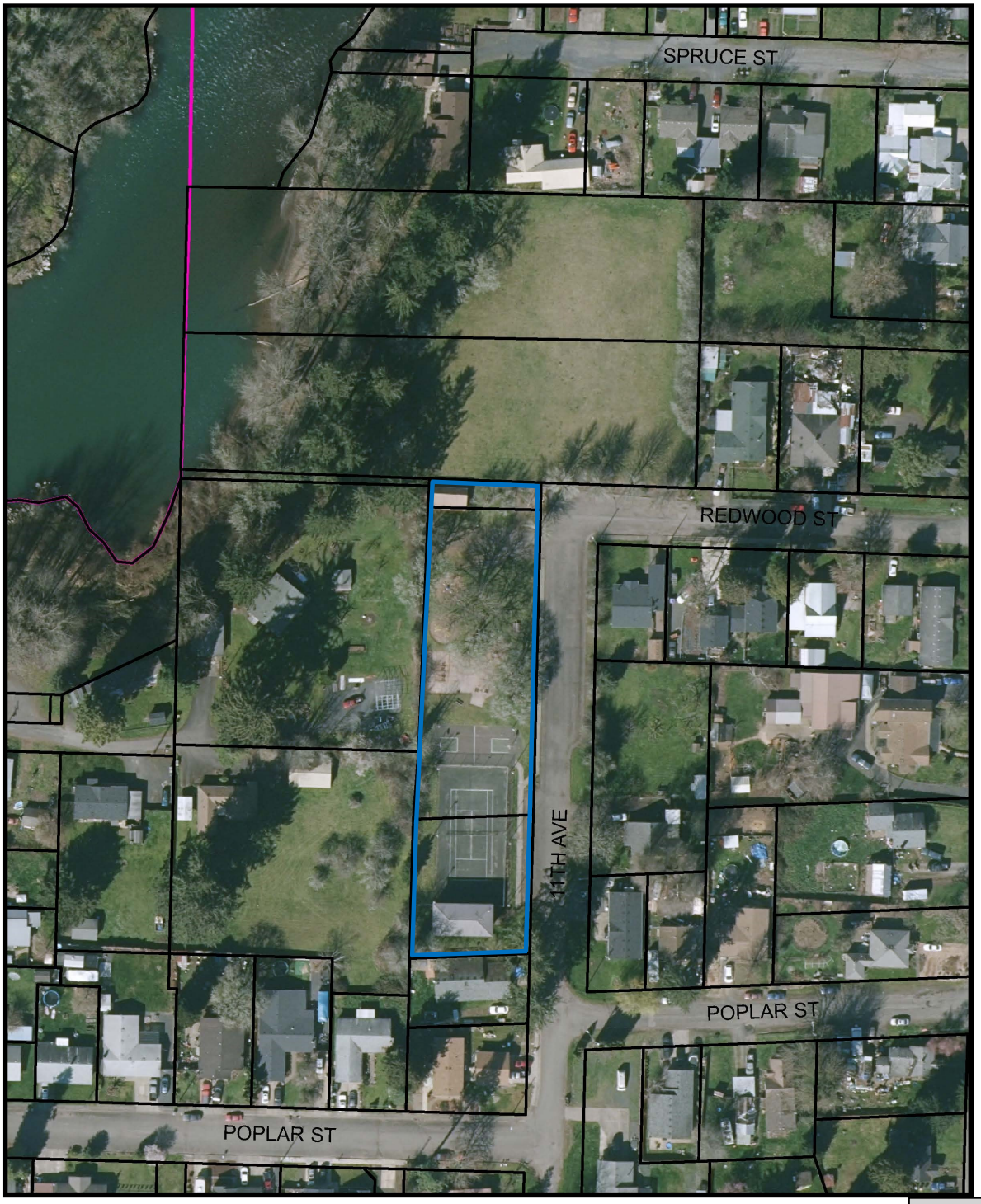

Legend

Tax lots

PIN

2nd Merge

N

600 300 0 600

1 inch = 600 feet

City of Sweet Home
Community and Economic Development Department- Planning Program
3225 Main Street, Sweet Home, OR 97386 541-367-8113

Application for a Property Line Adjustment or a Property Line Adjustment / Replat

Date Received: _____
Date Complete: _____
File Number: PLA22-11
Application Fee $: ~~$160.00/$200.00~~
Receipt #: _____

Applicant's Name:
The City of Sweet Home

Applicant's Address:
3225 Main Street, Sweet Home, OR 97386

Applicant's Phone and e-mail:
541-367-8113, aclegg@sweethomeor.gov

Within 30 days following the filing of this application, the City Planner will make a determination of completeness regarding the application. If deemed complete, the application will be processed.

Property A

Owner's Name:
City of Sweet Home

Owner's Address:
3225 Main Street, Sweet Home, OR 97386

Owner's Phone and e-mail:
541-367-8113, aclegg@sweethomeor.gov

Property Address:
1712 11th Avenue, Sweet Home, OR 97386

Assessor's Map and Tax Lot:
13S01E31AB 2300

Property Size Before: 12,392 SF
Property Size After: 0 SF

Zoning Classification
R-1

Property B

Owner's Name:
City of Sweet Home

Owner's Address:
3225 Main Street, Sweet Home, OR 97386

Owner's Phone and email:
541-367-8113, aclegg@sweethomeor.gov

Property Address:
1780 11th Avenue, Sweet Home, OR 97386

Assessor's Map and Tax Lot:
13S01E31AB 1500

Property Size Before: 26,374 SF
Property Size After: 38,766 SF

Zoning Classification:
R-1

Submittal Requirements

The checklist on the other side of this application lists the required items must be submitted with this application and the Criteria the request must meet. Please address all items that apply to this request.

I certify that the statements contained on this application, along with the submitted materials, are in all respects true and are correct to the best of my knowledge and belief.

Applicant's Signature: _____ Date: _____

Property Owner's Signature: _____ Date: _____

Property Owner's Signature: _____ Date: _____

Property Owner's Signature: _____ Date: _____

Property Owner's Signature: _____ Date: _____

Northside Park
Existing Properties before PLA's
PLA22-13

Legend

Tax lots

PIN

13S01E31AB 2300, 1500, 8100

13S01E31AB08000

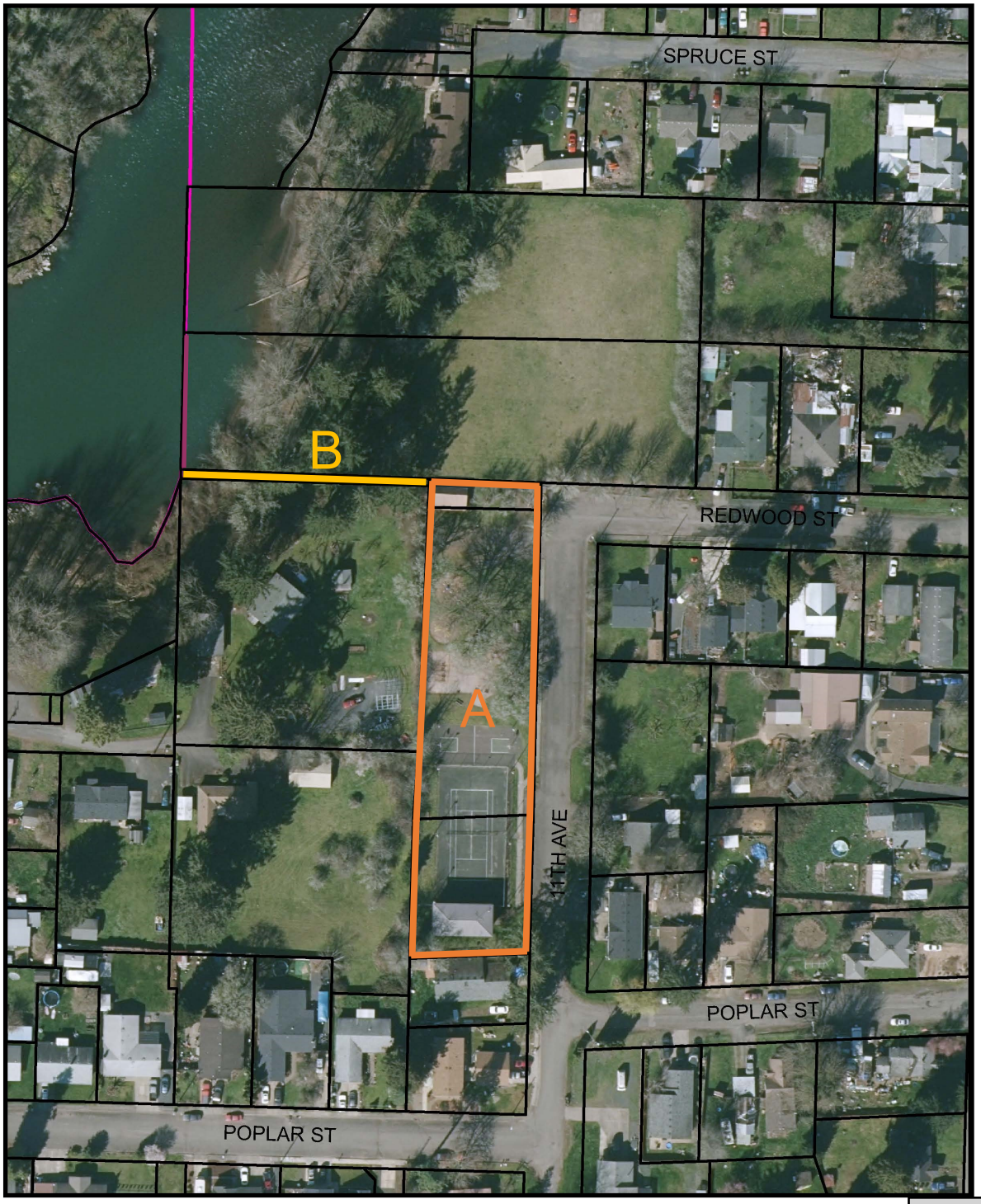

N

600 300 0 600

1 inch = 600 feet

Northside Park Property Line Adjustment
PLA22-13

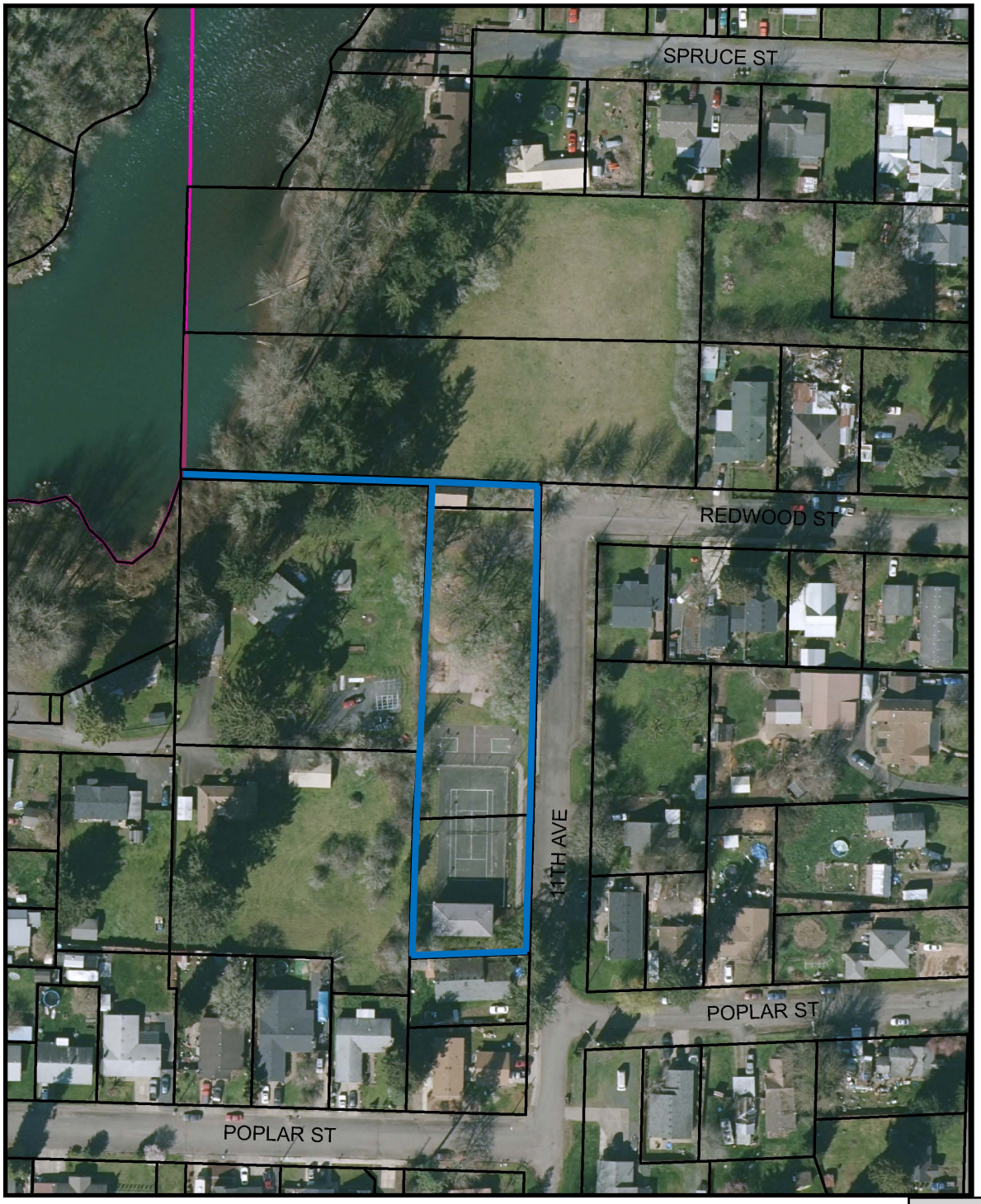

Legend

Tax lots

PIN

3rd Merge

N

600 300 0 600

1 inch = 600 feet

City of Sweet Home
Community and Economic Development Department- Planning Program
3225 Main Street, Sweet Home, OR 97386 541-367-8113

Application for a Property Line Adjustment or a Property Line Adjustment / Replat

Date Received: _____
Date Complete: _____
File Number: PLA22-11
Application Fee $: ~~$160.00/$200.00~~
Receipt #: _____

Applicant's Name:
The City of Sweet Home

Applicant's Address:
3225 Main Street, Sweet Home, OR 97386

Applicant's Phone and e-mail:
541-367-8113, aclegg@sweethomeor.gov

Within 30 days following the filing of this application, the City Planner will make a determination of completeness regarding the application. If deemed complete, the application will be processed.

Property A

Owner's Name:
City of Sweet Home

Owner's Address:
3225 Main Street, Sweet Home, OR 97386

Owner's Phone and e-mail:
541-367-8113, aclegg@sweethomeor.gov

Property Address:
1712 11th Avenue, Sweet Home, OR 97386

Assessor's Map and Tax Lot:
13S01E31AB 2300

Property Size Before: 12,392 SF
Property Size After: 0 SF

Zoning Classification
R-1

Property B

Owner's Name:
City of Sweet Home

Owner's Address:
3225 Main Street, Sweet Home, OR 97386

Owner's Phone and email:
541-367-8113, aclegg@sweethomeor.gov

Property Address:
1780 11th Avenue, Sweet Home, OR 97386

Assessor's Map and Tax Lot:
13S01E31AB 1500

Property Size Before: 26,374 SF
Property Size After: 38,766 SF

Zoning Classification:
R-1

Submittal Requirements

The checklist on the other side of this application lists the required items must be submitted with this application and the Criteria the request must meet. Please address all items that apply to this request.

I certify that the statements contained on this application, along with the submitted materials, are in all respects true and are correct to the best of my knowledge and belief.

Applicant's Signature: _____ Date: _____

Property Owner's Signature: _____ Date: _____

Property Owner's Signature: _____ Date: _____

Property Owner's Signature: _____ Date: _____

Property Owner's Signature: _____ Date: _____

Northside Park
Existing Properties before PLA's
PLA22-14

Legend

Tax lots

PIN

13S01E31AB 2300,1500,8100,8000

13S01E31AB01301

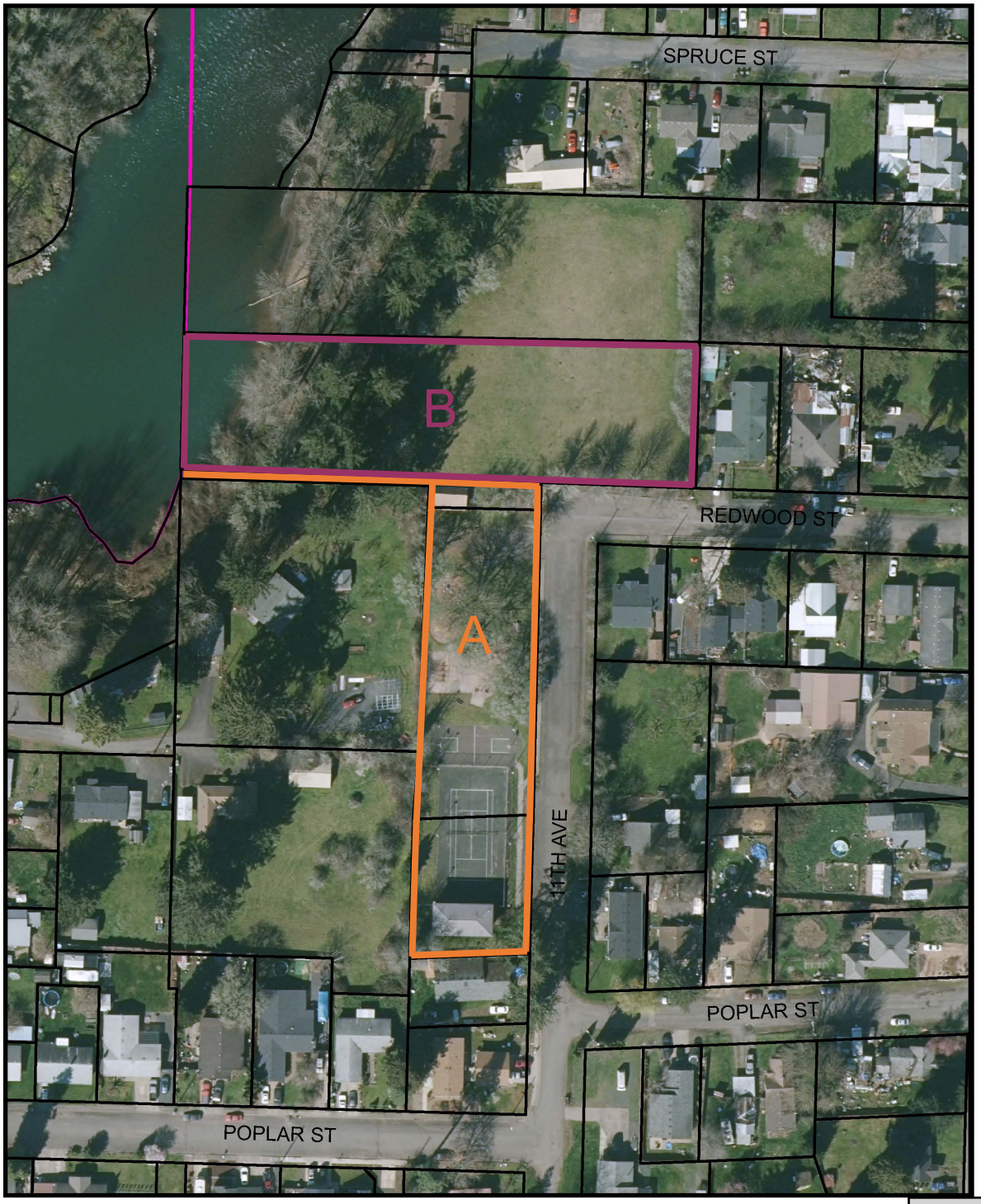

N

600 300 0 600

1 inch = 600 feet

Northside Park Property Line Adjustment
PLA22-14

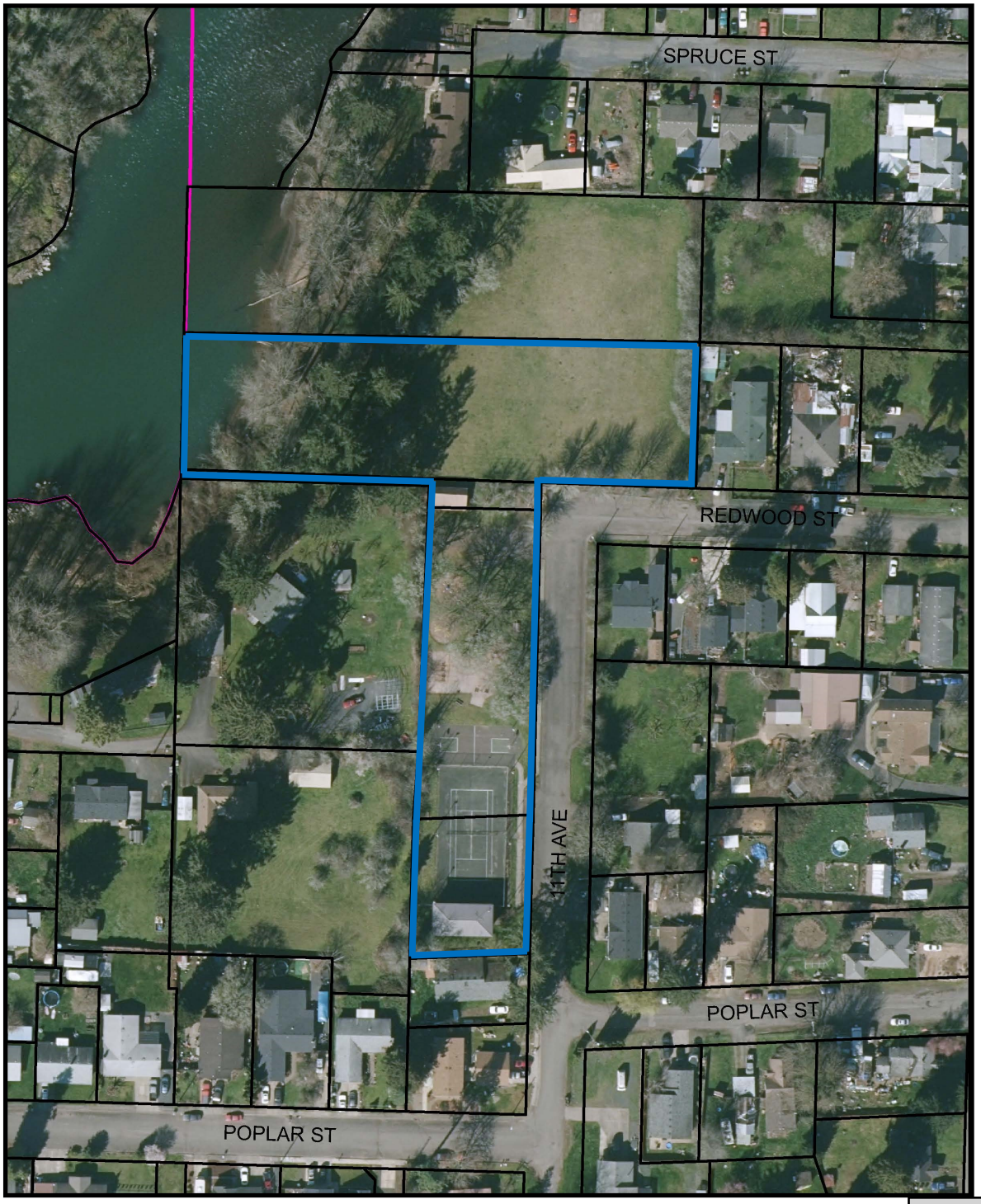

Legend

Tax lots

PIN

4th Merge

N

600 300 0 600

1 inch = 600 feet

City of Sweet Home
Community and Economic Development Department- Planning Program
3225 Main Street, Sweet Home, OR 97386 541-367-8113

Application for a Property Line Adjustment or a Property Line Adjustment / Replat

Date Received: _____
Date Complete: _____
File Number: PLA22-11
Application Fee $: ~~$160.00/$200.00~~
Receipt #: _____

Applicant's Name:
The City of Sweet Home

Applicant's Address:
3225 Main Street, Sweet Home, OR 97386

Applicant's Phone and e-mail:
541-367-8113, aclegg@sweethomeor.gov

Within 30 days following the filing of this application, the City Planner will make a determination of completeness regarding the application. If deemed complete, the application will be processed.

Property A

Owner's Name:
City of Sweet Home

Owner's Address:
3225 Main Street, Sweet Home, OR 97386

Owner's Phone and e-mail:
541-367-8113, aclegg@sweethomeor.gov

Property Address:
1712 11th Avenue, Sweet Home, OR 97386

Assessor's Map and Tax Lot:
13S01E31AB 2300

Property Size Before: 12,392 SF
Property Size After: 0 SF

Zoning Classification
R-1

Property B

Owner's Name:
City of Sweet Home

Owner's Address:
3225 Main Street, Sweet Home, OR 97386

Owner's Phone and email:
541-367-8113, aclegg@sweethomeor.gov

Property Address:
1780 11th Avenue, Sweet Home, OR 97386

Assessor's Map and Tax Lot:
13S01E31AB 1500

Property Size Before: 26,374 SF
Property Size After: 38,766 SF

Zoning Classification:
R-1

Submittal Requirements

The checklist on the other side of this application lists the required items must be submitted with this application and the Criteria the request must meet. Please address all items that apply to this request.

I certify that the statements contained on this application, along with the submitted materials, are in all respects true and are correct to the best of my knowledge and belief.

Applicant's Signature: _____ Date: _____

Property Owner's Signature: _____ Date: _____

Property Owner's Signature: _____ Date: _____

Property Owner's Signature: _____ Date: _____

Property Owner's Signature: _____ Date: _____

Northside Park
Existing Properties before PLA's
PLA22-15

Legend

Tax lots

PIN

13S01E31AB 2300,1500,8100,8000,1301

13S01E31AB01201

N

600 300 0 600

1 inch = 600 feet

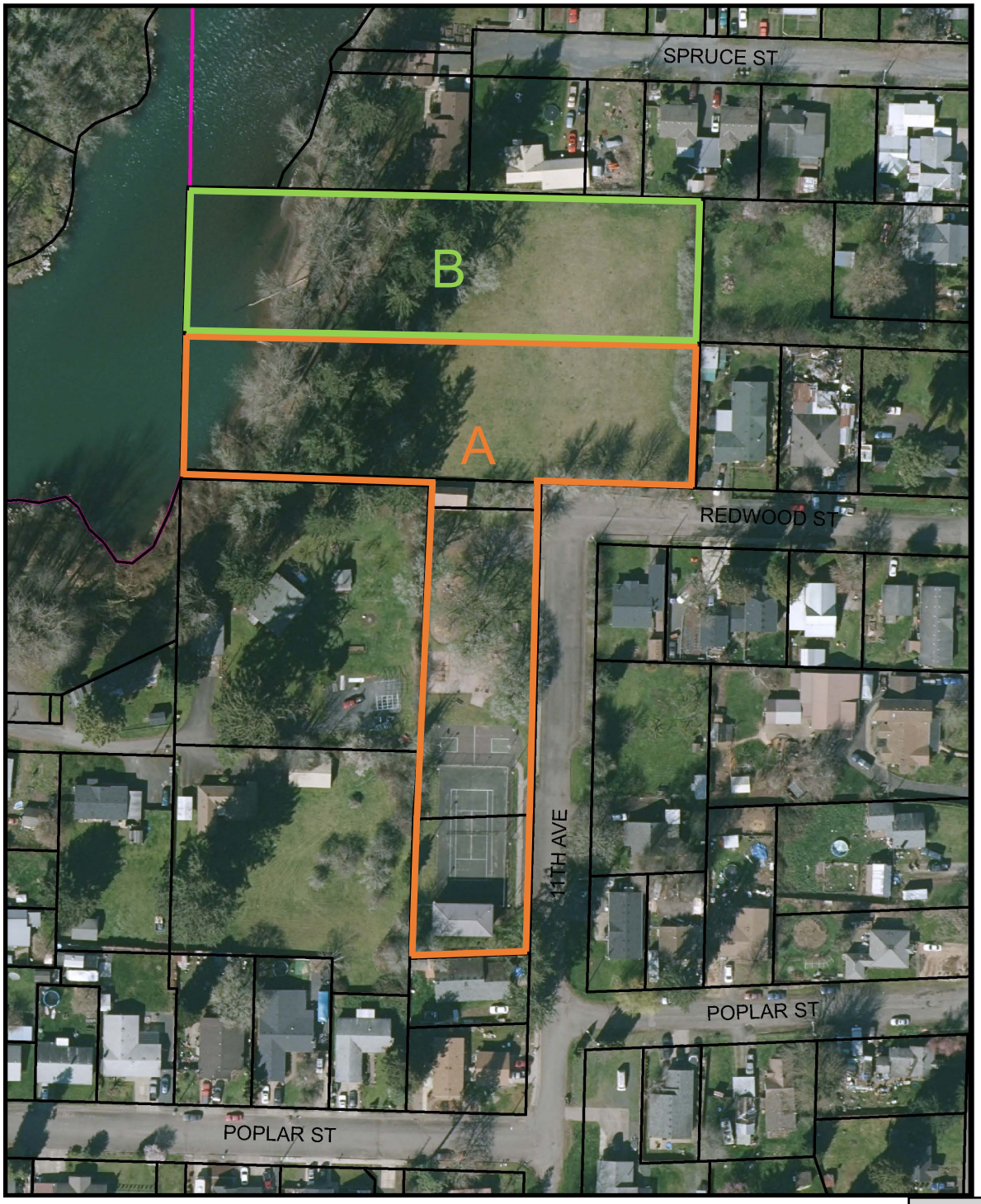

Northside Park
Existing Properties before PLA's
PLA22-15

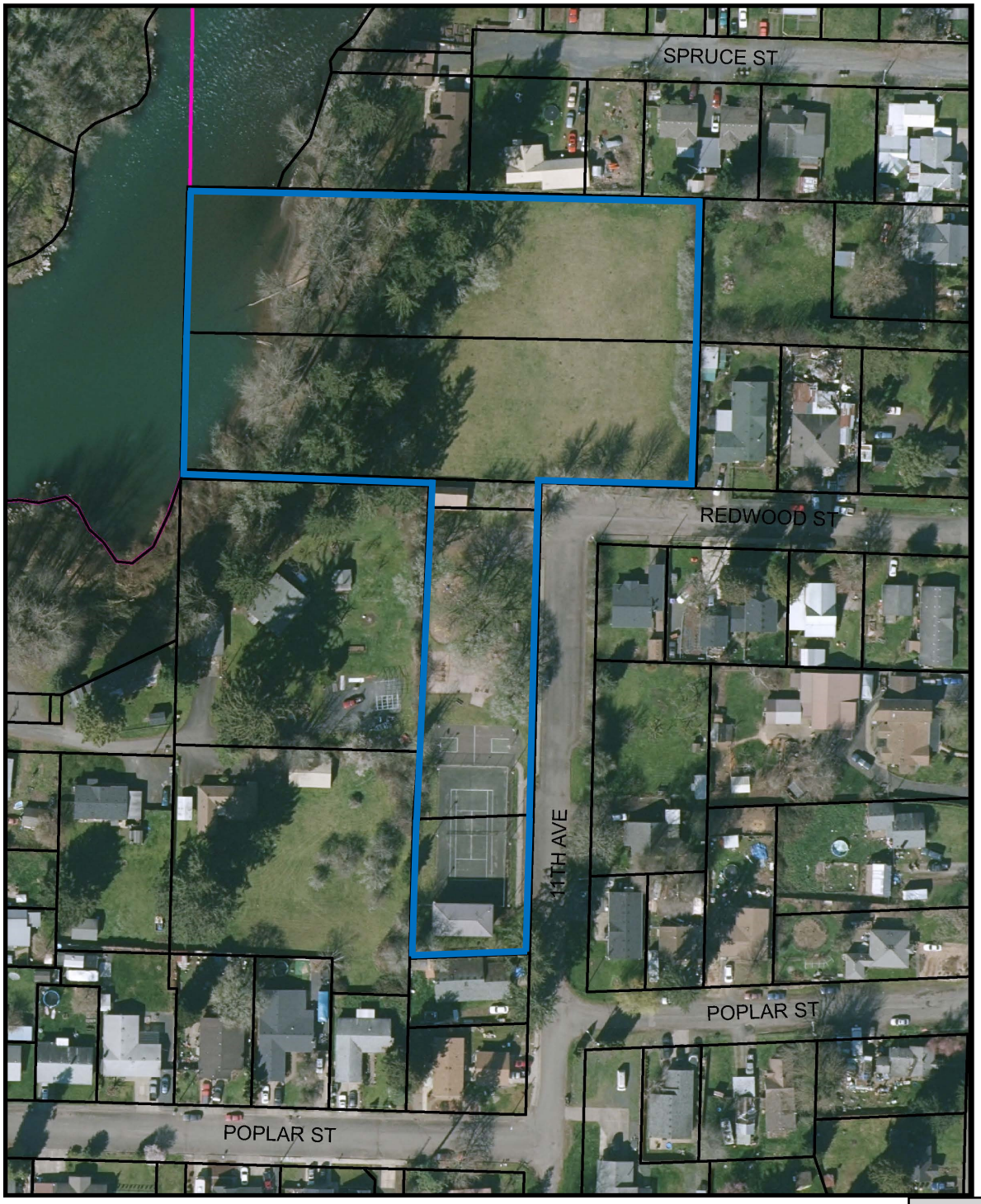

Legend

Tax lots

PIN

5th Merge

N

600 300 0 600

1 inch = 600 feet

ORDINANCE BILL NO. 4 FOR 2022

ORDINANCE NO. 1304

SWEET HOME ORDINANCE DECLARING A BAN ON PSILOCYBIN SERVICE CENTERS AND THE MANUFACTURE OF PSILOCYBIN PRODUCTS

WHEREAS, in November 2020, Oregon voters approved Ballot Measure 109, known as the Oregon Psilocybin Service Act (codified at ORS 475A), which allows for the manufacture, delivery and administration of psilocybin at licensed facilities; and

WHEREAS, ORS 475A.235 provides that the Oregon Health Authority will regulate the manufacturing, transportation, delivery, sale and purchase of psilocybin products and the provision of psilocybin services in the state; and

WHEREAS, the Oregon Health Authority has initiated a rulemaking process to implement the state's psilocybin regulatory program and intends to begin accepting applications for psilocybin-related licenses on January 2, 2023; and

WHEREAS, as of July 26, 2022, the Oregon Health Authority has not completed the rulemaking process for implementing the state's psilocybin regulatory program, and the City of Sweet Home is uncertain how the manufacture, delivery and administration of psilocybin at licensed psilocybin facilities will operate within the city; and

WHEREAS, ORS 475A.718 provides that a city council may adopt an ordinance to be referred to the electors of the city prohibiting the establishment of state licensed psilocybin product manufacturers and/or psilocybin service centers in the area subject to the jurisdiction of the city; and

WHEREAS, the City Council seeks to refer to the voters of Sweet Home the question of whether to establish a ban on state-licensed psilocybin product manufacturers and psilocybin service centers within the city's jurisdictional boundaries,

NOW THEREFORE,

The City of Sweet Home does ordain as follows:

Section 1. Prohibition.

The establishment of psilocybin product manufacturers licensed under ORS 475A.290 and psilocybin service centers licensed under ORS 475A.305 is prohibited in the City of Sweet Home.

Section 2. Referral.

This ordinance is referred to the electors of the city of Sweet Home for approval at the next statewide general election on November 8, 2022.

Section 3. Effective Date.

This ordinance takes effect and becomes operative 30 days after the day on which it is approved by a majority of voters.

PASSED by the Council and approved by the Mayor this 9th day of August, 2022.

_____
Mayor

ATTEST:

_____
City Manager Pro Tem - Ex Officio City Recorder

CONTRACT FOR
PROFESSIONAL SERVICES

This agreement is made and entered into between:

City of Sweet Home "**The Contractor**"

And

RURAL DEVELOPMENT INITIATIVES, INC. **"RDI"**

R E C I T A L S

A. RDI is an Oregon nonprofit corporation organized for the purpose of promoting and facilitating economic diversification for rural communities.

B. RDI is an independent contractor who desires to provide their professional services to the Contractor upon the terms and conditions set forth in this Contract.

NOW, THEREFORE, since it is to the mutual benefit that both parties work together and in collaboration with each other to successfully accomplish this worthy project and in consideration of the premises and of the mutual covenants contained herein, the parties agree as follows:

1. Appointment of Independent Contractor

The Contractor hereby appoints RDI as an independent contractor for the purpose of performing the services set forth on Attachment A, Scope of Work. No scope may be added without the full consent and agreement of both parties.

RDI will deliver all services under this scope.

2. Term

This contract shall be effective August 1, 2022 and unless sooner terminated pursuant to the provisions of Section 7, shall terminate June 30, 2023. It is understood that the timeframe for achieving the Contract's outcome will be somewhat flexible as informed by the good faith of RDI and the Contractor.

3. Relationship of the Parties: Subcontracts

A. RDI is an independent contractor in as much as the Contractor retains control of only the outcome of performance and that RDI has the appropriate licensing needed to provide the service and will provide the necessary equipment to perform such service; and both parties stand ready to absorb any losses which could possibly occur through this venture. Nothing contained herein shall be deemed to create a partnership, joint venture, employee or agency relationship between the parties. RDI shall not represent itself to the public as an agent, employee, partner or joint venturer of the Contractor without express written permission.

While working on this contract the Contractor will acknowledge RDI's branding on all related materials, intellectual property and public statements.

B. RDI shall not enter into any subcontract for any of the work scheduled under this Contract without obtaining the prior written approval of the Contractor.

4. Compensation

RDI shall be compensated for the scope of work referenced in Attachment A. The agreed upon amount is $20,000.00 for services.

RDI shall invoice the Contractor upon execution of the contract.

5. Expenses

No incurred expenses will be reimbursed, unless specified in Attachment A.

6. Indemnification and Insurance

To the fullest extent permitted by law, RDI shall indemnify and hold harmless the Contractor and its directors, employees and agents, from and against all claims, damages, losses and expenses, including, but not limited to, attorney fees, arising out of or resulting in any way from the performance or nonperformance of the activities described in this Contract except for any claims, damages, losses or expenses caused solely by the negligence of the Contractor, which the Contractor agrees to indemnify and hold RDI harmless there from.

7. Termination and Modification

A. This Contract may be terminated prior to its stated termination date by the mutual consent of both parties, or by either party for any reason upon 30 days advance written notice.

B. In the event of RDI's default, the Contractor, by written notice of default may terminate the whole or any part of this Contract immediately:

(1) if RDI fails to provide services called for by this Contract and listed on Attachment A within the time specified herein or any extension thereof granted by RDI; or

(2) if RDI fails to perform any of the other provisions of this Contract, or so fails to pursue the work as to endanger performance of this Contract in accordance with its terms, and after receipt of written notice from the Contractor, fails to correct such failures within 10 days or such longer period as the Contractor may authorize in such notice.

The rights and remedies of the Contractor provided in the above clause relating to defaults (including breach of contract) by RDI shall be in addition to any other rights and remedies provided by Oregon law or under this contract.

8. Ownership of Work Product

Work product independently produced by RDI under this Contract is the sole property of RDI, unless otherwise stipulated in Attachment A.

9. State Worker's Compensation Act

RDI and its subcontractors working under this Contract (if any), are subject employers under the Oregon Workers' Compensation Law, and shall comply with ORS 656.017, which requires an employer to provide Workers' Compensation coverage that satisfies Oregon law for all of an

employer's subject workers. The Contractor shall not be responsible for providing Worker's Compensation coverage to RDI or any of RDI's subcontractors or employees working under this Contract.

10. Independent Consultant

RDI shall perform all Services as an independent contractor. Although the Contractor reserves the right (a) to determine (and modify) the delivery schedule for the services and (b) to evaluate the quality of the completed performance, the Contractor cannot and will not control the means or manner of the RDI's performance. RDI is responsible for determining the appropriate means and manner of performing the services.

11. Assignment

Neither this Contract nor any interest in this Contract or in the rights thereunder shall be assigned, conveyed or transferred in any manner whatsoever, directly or indirectly by RDI.

12. Attorney Fees

If an action is instituted to declare or enforce any provision of this Contract, the prevailing party shall be entitled to recover reasonable attorney fees from the losing party in the trial and all appellate courts, in addition to any other recovery and costs.

13. Notices

Any notice required or permitted under this Contract shall be given when actually delivered or when deposited in the United States mail as certified mail with postage prepaid, addressed to the parties as indicated below their signatures, or to such other address as may be specified from time to time by notice in compliance with this Section.

14. Waiver

The failure by either party at any time to require performance of any provision of this Contract shall in no way affect the right to enforce that provision or be deemed a waiver of any subsequent breach of any such provision.

15. Integration and Amendment

This Contract is the final and complete agreement of the parties and there are no understandings, agreements or representations, oral or written, not contained here in regarding the subject matter of this Contract. This Contract may not be amended except by a written agreement signed by both parties.

16. Governing Law

This Contract shall be interpreted, construed, governed and enforced according to the laws of the State of Oregon.

"RDI"
Rural Development Initiatives, Inc.

Signature	Date
Heidi Khokhar, Executive Director	
Rural Development Initiatives	
91017 S Willamette Street	
Coburg, OR 97408	

93-1073746
Employer Identification Number

"THE CONTRACTOR"

Signature	Date
Christy Wurster, City Manager Pro Temp	
City of Sweet Home	
3225 Main Street	
Sweet Home, OR 97386	

Attachment A: SCOPE OF WORK

RDI will create the foundation for the combined Community and Youth Rural Leadership Program. The budget for this work is $20,000 and will include building community resources, securing funds for the first cohort, build the capacity of local trainers, and recruit cohort members for the combined program.

The breakdown of the budget by contract activity is as follows:

Sweet Home: August 1, 2022-June 30, 2023	
Combined Rural Community Leadership Program	
Stakeholder Development In-community & virtual meetings, stakeholder recruitment, material development, program design, logistics, and management	$7,500.00
Funder Development Grant research, complilation, sponsorhsip development, material creation,and management	$4,500.00
Community Trainer Trainings Trainer Recruitment, logisitics, material creation, curricumlum training, coaching and preparation calls	$3,000.00
First Cohort Recruitment Community wide recruitment for youth and community cohort members. Includes in-community recruitment events with a meal	$3,000.00
Additional Expenses: Travel, Food, Indirect Costs	$2,000.00
	$20,000.00

The following page gives a brief explanation of the above expenses and a tentative timeline of activities.

Community Design and Development Phase (July – October 2022)
Through in-community and virtual meetings RDI will build key community stakeholders who will be community champions for the combined program. This will include meetings to design the program. This will include but not be limited to:

- City of Sweet Home
- Youth Advisory Council
- Past Leadership Graduates
- Chamber of Commerce
- Fire Department
- School District
- Health Care Organizations
- Cascade Timber Consulting

Fund Development Phase (July 2022 – June 2023)
RDI, with partnership from community champions, will raise the needed $40,000 to launch the first cohort. RDI Staff will create and execute a fundraising plan that includes researching, applying for, and managing grants. Additional funds will be secured through community in-kind services and program sponsorships.

Train the Trainers Phase (October 2022 – March 2023)
RDI Executive Director and Lead Trainer will build the capacity of local community members through program coaching and training. Community Trainers will aid in the facilitation and training of the first cohort and each additional cohort with the end goal of program sustainability.

Cohort Recruitment (April –September 2023)
RDI Staff will host in-community and virtual recruitment meetings. The goal is to build a cohort of 35-40 members, 15-20 of the members will be 13-15 years old. The first cohort of the combined Community and Youth Leadership trainings will be delivered in Fall of 2023.

Additional Expenses:
Curriculum Materials & Supplies: This category includes the creation of recruitment materials and other program delivery supplies for an estimated 25 participants for a fall 2023 workshop delivery.

Travel Expenses (Mileage/Rental Car, Lodging, Meals): RDI program staff will take multiple trips into Sweet Home to consult with and gather information about community needs, priorities and interests. In addition host 2+ recruitment events for gathering community trainers and cohort members.

Shared Overhead/Indirect Expenses: This category includes expenses for technology support, website outreach, participant database management, rent, utilities, office equipment & supplies, and insurance.

City of Sweet Home
Sweet Home Public Library
1101 13th Avenue
Sweet Home, OR 97386
541-367-5007

Sweet Home Public Library

Statistics

	This month July 2022	Last month June 2022	Year to date 2022	Previous year 2021(total)
Patron Activity				
OPAC Logins	198	180	1409	3081
SIP2 Logins	450	442	3987	6775
Main Door Count	2548	2942	16208	n/a
Circulation and Renewals				
Checkouts	4902	4220	23665	28723
Renewed items	421	440	4454	9125
E-audio & E-book checkouts	447	457	3046	5491
Total items checked out	5770	5117	31165	43339
Holds Requested				
Holds by Staff	110	95	833	1683
Holds by OPAC	158	91	756	1495
Item Counts				
Total items in library	29203	29346	29203	32879
Public Access Computers				
Logins	184	219	1398	2104
Resource Sharing Savings				
Cost savings	3958.56	4269.97	24090.82	n/a
Items borrowed by consortium libraries	254	347	1682	n/a
Items borrowed from consortium libraries	314	260	1606	n/a

Events

Summer Reading events continue through the end of August. Our two Art & Story time in the Park events in July were each attended by over 50 kids. A special thank you to Council Member Coleman for stepping in at the last moment to read Apples to Oregon to the kids for one of the events.

In a partnership with The Museum of Natural and Cultural History, Oregon's Dino-Story will be at the Library from August 3rd until September 3rd. This is an interactive exhibit about Dinosaurs in Oregon.

Projects ongoing

We are continuing to streamline and updated processes for the benefit of staff and patrons.

New Library update

A meeting with a potential donor was been delayed to August or September, due to Jamboree traffic issues.

MEMORANDUM

TO: City Council
Christy Wurster, City Manager Pro Tem
Interested Parties
FROM: Blair Larsen, Community and Economic Dev. Director
DATE: August 9, 2022
SUBJECT: Community and Economic Development Department Report for July, 2022

The Community and Economic Development Department (CEDD) consists of the City's Building, Planning, Engineering, Economic Development, Code Enforcement, and Parks and Recreation programs. The following is a summary of activities and notes on current projects from July 1st, to July 31st, 2022.

1. BUILDING

- Summary of Building Program Permits Issued.

Permit Category	July, 2022	June, 2022	2022 YTD	2021 Total	2017-2021 Annual Average
Residential 1 and 2 Family Dwellings	3	0	28	23	28.0
Residential Demolition	0	0	5	9	8.2
Residential Manufactured Dwellings	0	0	2	16	13.8
Residential Mechanical Permits	14	13	68	120	110.2
Residential Plumbing	2	2	17	35	28.8
Residential Site Development	0	0	1	0	1.2
Residential Structural	9	3	31	56	48.8
Commercial Alarm or Suppression Systems	0	0	0	11	3.4
Commercial Demolition	0	0	2	4	3.4
Commercial Mechanical	1	0	11	19	14.6
Commercial Plumbing	0	1	3	9	11.0
Commercial Site Development	2	2	5	3	2.8
Commercial Structural	4	4	19	45	41.4
Total Permits	**35**	**25**	**192**	**350**	**315.6**
Value Estimate of All Permits	**$1,869,054.00**	**$169,109.01**	**$12,605,813.29**	**$16,811,721.35**	**$17,061,471.73**
Fees Collected	**$24,819.16**	**$7,240.18**	**$170,825.68**	**$250,671.91**	**$233,439.18**

2. PLANNING

- Summary of Final Decisions of Planning Division Applications:

Application Type	July, 2022	June, 2022	2022 YTD	2021 Total	2017-2021 Annual Average
Annexations	0	0	0	0	0.4
Code Amendments	0	0	0	1	0.8
Conditional Use	0	0	9	11	8.0
Partition	2	3	12	20	9.0
Planned Development/ Subdivision	0	1	3	4	1.2
Property Line Adjustments	1	3	11	21	12.0
Vacation	0	0	0	0	0
Variance	1	0	3	1	4.4
Zoning Map Amendment	0	1	1	4	2.2

- 1 Land Use Application was submitted in July.
- 1 Land Use Application is pending final approval.
- 3 Fence Permits were issued in July.
- 0 Temporary RV Permits were issued in July.
- The overhaul of development code portions of the Sweet Home Municipal Code (SHMC) is progressing as planned. The Planning Commission has completed their review of the draft code. Due to state notice requirements, we had to push the required Planning Commission public hearing to August 4th (it was previously scheduled for July 21, 2022). After that public hearing, the Commission may make a recommendation to the City Council that the updated code be adopted. The Council will then have an opportunity to review the document and consider changes. We have scheduled the required City Council public hearing for August 23rd. Based on Council feedback, after the required public hearing, Staff will schedule a special Council meeting for the first reading of the adoption ordinance. The reading will require approximately 6 and a half hours. This meeting can be scheduled anytime after August 23rd.
- The City has received a grant from the State to update our Transportation System Plan and create an Area Plan for the undeveloped land on the north side of the City. A consultant for the work is now on board, and the City has met with them to kick off the project.
- The City has also received a State grant for a Housing Needs Analysis (HNA). The consultant has been selected and will begin work soon. The purpose is to ensure that the City has both sufficient residential lands, and the proper mix of types and densities. This project is now underway, and Staff are meeting with the consultants every two weeks on the project.
- The Planning Commission last met on August 4th. The next scheduled meeting is September 1st, 2022.

3. ECONOMIC DEVELOPMENT

- Based on feedback from the Council at the June 28th work session, Staff are developing a Request for Proposals (RFP) for the quarry property that will outline all of the City's goals for the property and seek interest from developers for a public-private-partnership with the City. After Staff have finished a draft of the RFP, we will bring it to the Council for review, suggested changes, and, ultimately, approval.
- The Administration, Property, and Finance Committee met with some local property owners in June to discuss vacant buildings. One of the property owners, La Mota, is seeking to collaborate with the City on a project for their buildings that will bring traffic to the area, and provide space for entrepreneurs to start businesses. Staff has scheduled a meeting with them and other property owners and interested parties to establish a project scope and determine feasibility and costs.

4. CODE ENFORCEMENT

- Summary of Actions.

Case Status	July, 2022	June, 2022	2022 YTD	2021 Total	2018-2021 Annual Average
New Complaints	10	5	52	92	84.00
New Officer-Detected Violations	3	17	54	74	74.00
Violations Resolved	11	25	74	166	286.25
Complaints Noted with No Violation Found	1	5	13	16	22.75
Open Cases at End of Period	13	9	13	12	20
Citations	0	0	0	7	4.00
Abatements	0	0	2	1	0.33
Enforcement Type	**July, 2022**	**June, 2022**	**2022 YTD**	**2021 Total**	**2018-2021 Annual Average**
Animal	4	0	15	35	46.50
Blight	0	0	0	2	1.25
Illegal Burn	0	0	2	1	1.75
Illegal Dumping	0	0	1	0	0.50
Illegal Parking	0	1	6	11	9.75
Illegal Sign	0	0	0	1	2.75
Junk/Abandoned Vehicle	6	1	12	4	9.00
Minimum Housing	0	0	0	0	3.25
Occupying an RV	1	0	8	26	42.00
Open Storage	0	1	14	31	67.25
Other	0	0	3	11	20.75
Public Nuisance	0	0	2	17	48.5
Public Right-of-way	0	0	0	2	12.75
Tall Grass & Weeds	2	18	42	65	122.75
Vacant Lot	0	0	0	0	0.25

The City's Code Enforcement Officer responds to complaints submitted through the City's website, and actively patrols the City and works to resolve identified code violations.

5. PARKS

- The Park and Tree Committee will meet next on August 17th, 2022.
- Construction of Phase II of the Sankey Park Improvements is now complete. Design work is now underway for Phase III of the park improvements, which will focus on the upper portion of the park.
- Design work is underway for a new park adjacent to City Hall. The Park will include a donated playground structure and dog park.
- Design work is also underway for a dog park at Northside Park. Staff is working to consolidate the 6 lots that make up Northside Park into 1 lot.
- We are holding "Movies in the Park" in Sankey Park again this year. The turnout for June 17th ("Encanto") and July 15th ("Sing 2") were fantastic, with over 100 in attendance in June, and nearly 200 in July. We are looking forward to our final movie for this year on August 19th ("Space Jam 2").

6. OTHER PROJECTS

- Willow Street Neighborhood LID: Staff recently met with representatives of several state agencies at a "one stop" meeting and have a tentative plan for financing that will include a package of both forgivable loans and other loans with very attractive interest rates. Staff is currently working on loan applications. One application has been submitted, but the other program won't be reviewing applications until September.
- The ODOT Foster Lake Sidewalk Project: Construction has begun, but we don't yet have a solid estimate from ODOT on when it will be completed.
- Staff is working with ODOT on a pedestrian crossing at 22nd Avenue and Main Street. State Funding has been identified, and we have an agreement with ODOT on what improvements will be constructed and where. This will come at little to no cost to the City. This improvement will be combined with an existing ODOT project to replace ADA ramps at intersections on Main Street. Construction on the overall ramp replacement project has begun, and the pedestrian crossing will follow after construction on the ramps is complete. ODOT is preparing an amendment to the IGA to cover the pedestrian crossing.
- CEDD Staff have been developing designs for the budgeted City Hall renovation and emergency generator installation. This project has been included in the budget for this fiscal year, and we will be preparing a request for proposals soon.
- CEDD Staff continue to provide key support for the efforts to create a managed homeless facility. The site has been cleared, and a new fence has been erected along the south side of the easement. Water and power lines have been extended to the site, and the sewer line is expected to be completed soon. Staff is meeting with FAC on a weekly basis to coordinate site development. FAC has run into delays in their efforts to move the old City Hall annex building to the site, and staff is working with them to overcome this hurdle.

MEMORANDUM

TO: Christy Wurster, City Manager Pro Tem
FROM: Greg Springman, Public Works Director
DATE: August 9, 2022
SUBJECT: Public Works Activities Report – July 2022

This memorandum provides a brief periodic update of specific projects, WTP/WWTP O&M and Compliance status, and activities performed by the Public Works Department.

This table section summarizes work done on key maintenance activities.

Work Type	July, 2022	June, 2022	2022 YTD	2021	3 Yr Avg
Bathrooms/Garbage	18	20	116	169	503
Catch Basin Inspection/cleaning	0	0	3	6	28
Leaf Collection	0	0	0	1637	666
Hydrant Flushing	0	30	69	324	302
Locates	41	43	307	491	486
Meter Re-Read	60	80	417	1060	777
Mowing	26	34	93	40	84
Playground EQ Inspection	5	7	46	49	56
Pothole Repair	0	53	328	514	597
Sewer CCTV Miles	0.03	0.00	0.40	0.16	2.48
Street Sweeping Miles	122	121	718	893	2374
Water Main Repair	0	4	10	9	10
Water Service Repair	2	9	28	20	41
Water Turn Ons/Offs	55	79	385	677	877
Total Completed Work Orders	**580**	**742**	**3823**	**6050**	**6973**

WWTP and WTP Key Performance Indicators (KPIs)

	June, 2022	May, 2022	2022 YTD	2021	5 Yr Avg
Potable					
MG Treated	28.05	25.47	158.20	363.99	406.97
Backwash Water in MG	1.26	1.11	8.37	30.07	19.92
Ave daily demand in MG	0.94	0.82	0.87	1.00	1.12
Sanitary					
MG Treated	76.19	97.41	458.45	641.31	586.99
Max Daily Flow in MG	4.51	4.88	6.01	5.89	6.08
Average Flow in MG	2.54	3.14	2.52	1.76	1.61

* MG is Million Gallons

Note: Sweet Home Wastewater treatment plant experienced 3 exceedances for the month of June 2022.

- On 6/14/2022 Max daily TSS pounds was 400.0 on a permit limit of 240 pounds
- On 6/15/2022 Weekly Avg TTS pounds was 309.6 on a permit limit of 180 pounds
- For June Monthly Avg TTS pounds was 137.7 on a permit limit of 120

Current & Upcoming Projects

Wastewater Treatment Plant Improvement Project

Scope: Upgrades to equipment & processes for DEQ Compliance

Status: Engineer of Record (West Yost) has completed WWTP Final Design for Project I, Workshop dates are being scheduled for WWTP Final Design Project II. DEQ provided approval letter for Project 1 on July 7, 2022. West Yost will present WWTP Project 1 to Council in August 2022. Funding source for Phase II to be determined by Council at a future date.

Small Diameter Water Main Replacement

Scope: Engineer of Record and Staff has identified aged water mains throughout the 54 miles of water distribution system. Staff and West Yost will take a phase approach to replace the 5 miles of small diameter water mains.

Status: Project RFP bids from Contractors have been submitted. Staff determined Buy American Act requirements do not apply to this project. Staff to award Project in August 2022. to awarding the project.

Water Master Plan – West Yost

Scope: Develop Water Master Plan to support development.

Status: Water Master Plan is scheduled for completion in November 2022. Staff will provide updates as necessary.

Stormwater Master Plan – West Yost

Scope: Develop Stormwater Master Plan to support development

Status: Stormwater Master Plan is scheduled for completion in June 2023. Staff will provide updates as necessary.

Backwash Pump Evaluation – West Yost

Scope: Install backwash pump, utilizing the clearwell for filter backwashes and the corresponding effects on the distribution system and treatment.

Status: Project awarded to Pacific Excavation. Backwash pump has been back ordered, projected arrival date in November 2022. Construction started May 2022. Project on schedule, other than the arrival of the backwash pump.

Finished Water Pump VFD Evaluation – West Yost

Scope: Evaluate feasibility to add a Variable Frequency Drive (VFD) to the current finish water pumps to maintain a constant level in clearwell to help facilitate backwash pumping.

Status: Project awarded to Pacific Excavation, with VFD installation coordinated with The Automation Group (TAG). Construction started May 2022 has been on schedule, other than the backwash pump arrival in November 2022.

Fluoride at WTP

Scope: Fluoride system at WTP has failed/End of life budgeted for replacement this FY23.

Status: PW Staff ordered replacement parts. Arrival for replacement parts TBD. Staff will provide updates to Council as necessary.

Water Meter Modernization

Scope: Replace water meters through the entire water distribution system.

Status: Public Works staff purchased 3000 Kamstrup Smart Ultrasonic water meters. Public Works staff has installed 2040 meters to date, 68% completed.

Wastewater Filter Belt Press

Scope: Filter Belt Press was installed in approx. 1974 and is an operational and financial challenge to keep operating, looking to prepurchase new dewatering equipment for the wastewater treatment plant as part of the upgrade project.

Status: PW staff currently working with Engineer of Record to confirm sizing of dewatering equipment.

Oregon
Kate Brown, Governor

Department of Environmental Quality
Western Region Salem Office
4026 Fairview Industrial Dr SE
Salem, OR 97302-1142
Office: (503) 378-8240
Fax: (503) 373-7944
TTY: 711

July 7, 2022

Christy Wurster, City Manager
City of Sweet Home
3225 Main Street
Sweet Home, OR 97386

RE: WQ-City of Sweet Home Sewage Treatment System
File No. 86840, NPDES Permit No. 101657
Linn County
Approval – Phase 1 Plant Improvements

Dear Ms. Wurster:

DEQ has completed review of the June 2022 engineering plans for the proposed improvements to the City of Sweet Home sewage treatment facilities. The proposed changes to the original plans provide for a change in the phased approach to the plant upgrades. The following is a brief description of the Phase 1 project:

1. Replacement of the existing influent pump station. The existing influent pump station will be replaced with a new station employing five submersible pumps, each with variable speed drives. Two smaller pumps will be designed to handle dry weather flow, and three additional larger pumps will be designed to handle the peak day wet weather flow. The design average dry weather design flow in 2045 will be 1.1 MGD. The average wet weather design flow in 2045 with be 2.6 MGD. The firm capacity of the new pump station with the largest pump out of service will be 15.3 MGD.
2. The two dry weather pumps will each be 25 HP submersibles with VFDs rated at 1250 gpm and 42.5 feet TDH.
3. The three wet weather pumps will each be 75 HP submersibles with VFDs rated at 4700 gpm and 40 feet TDH.
4. Level control will be provided by a submerged hydrostatic transducer system.
5. A temporary forcemain will be installed to provide flow to the existing aeration basins due to the existing pump station being demolished. During the phase 2 project, plant hydraulics and yard piping will be significantly modified to incorporate the additional treatment units.
6. A new back-up power system will included consisting of a 900kW dedicated diesel powered generator with automatic transfer switch.
7. The plant will remain with only manually cleaned bar screens for the influent. Two mechanical screens are planned for the Phase 2 project.
8. Upgrades to the plant yard piping and electrical systems will be included.

The project is hereby approved provided the following conditions are met:

1. The design engineer or an authorized representative must inspect construction of the project, and shall certify proper construction in writing upon completion. Note that significant change orders should be cleared with DEQ beforehand. DEQ strongly encourages the City of Sweet Home to take an active role in construction and inspection.

2. Testing of each piece of equipment must be performed as set forth in the applicable sections of the specifications. Upon completion of such testing the field logs shall be retained and included with the above certification if requested by DEQ.

3. The operation of the subject facilities must not commence without DEQ approval of a new Operation and Maintenance Manual. DEQ recommends that a complete O&M Manual be submitted prior to the 50% construction point to avoid delay in the start-up due to the lack of an approved manual. The manual should be loose-leaf and tabbed to accommodate revisions and for ease of access, respectively. Upon approval, the City of Sweet Home must maintain copies of the O&M manual for operations staff and training purposes.

4. Effective erosion controls must be designed and implemented prior to commencement of construction and be maintained by the contractor throughout the project. All soil, including wheel mud from the contractor's equipment, must be contained on the site to the maximum extent practicable. If the construction results in the disturbance of more than one acre, application must be made for a National Pollutant Discharge Elimination System Stormwater Permit, No. 1200-C, prior to the commencement of construction.

5. The final project must conform to all applicable electrical, plumbing, building, fire, and mechanical codes and safety requirements.

Attached for your use is a standard certification form, copies of the Department's guidelines for the development of O&M Manuals for treatment plants and pump stations.

The City of Sweet Home, as the NPDES permittee, is responsible for ensuring that all of these conditions of approval are met. Submittals should be directed to the DEQ Salem office to the attention of Timothy McFetridge at the address of this letter. Phone: (503) 378-4995.

The Department looks forward to the start of construction and eventual completion/start-up of the new treatment facilities. The construction site will be visited by staff of DEQ during and after construction. Notification will be provided prior to construction inspections. If you have any questions regarding this letter of conditional final approval, feel free to contact me at the Salem DEQ office.

Sincerely,

Tim McFetridge

Timothy C. McFetridge, P.E.
Senior Environmental Engineer
DEQ, Salem Office

cc: Alexis Cooley, DEQ, Eugene
WQ – Compliance File, Salem DEQ

Preston Van Meter, P.E.
West Yost Associates
5 Centerpoint Drive, Suite 130
Lake Oswego, OR 97035

INSPECTION AND CERTIFICATION OF PROPER CONSTRUCTION

Timothy C. McFetridge, P.E.
Department of Environmental Quality
4026 Fairview Industrial Drive
Salem, OR 97302

Project Name_____

Project Location_____

I was the design engineer on the above-reference project and my authorized representative or I did supervise and inspect the construction.

I certify that such construction was inspected and found to be in accordance with the plans and specification, including any changes therein approved by the Department of Environmental Quality.

Supplemental Inspections Were Made By:

_____

_____
Design Engineer's Signature/Date

cc: Send copies to appropriate sewer system operator

Engineering Plan Review

Preparation of Operations and Maintenance Manuals for Domestic Wastewater Treatment Facilities

DEQ

State of Oregon
Department of
Environmental
Quality

December 2012

Last Updated: 12/12/2012
By: J. Gasik
DEQ 12-WQ-056

Preparation of Sewage Treatment Plant O&M Manuals

This document prepared by:

Oregon Department of Environmental Quality
811 SW 6th Avenue
Portland, OR 97204
1-800-452-4011
www.oregon.gov/deq

Preparation of Sewage Treatment Plant O&M Manuals

This document provides general instructions for completion of **operations and maintenance (O&M) manuals for domestic wastewater facilities**. This information is intended as guidance for wastewater treatment plant owners and should be interpreted and used in a manner fully consistent with the state's environmental cleanup laws and implementing rules. This document does not constitute rulemaking by the Oregon Environmental Quality Commission and may not be relied on to create a right or benefit, substantive or procedural, enforceable at law or in equity, by any person, including Oregon Department of Environmental Quality (ODEQ) employees.

Do You Have Comments or Suggestions for Improving this Guidance? Please let us know! Please contact an ODEQ plan review engineer at one of the offices listed below:

Northwest Region Offices	Western Region Offices	Eastern Region Offices
Mike Pinney, MS, PE 2020 SW 4th Ave., Suite 400 Portland, OR 97201 Phone: 503-229-5310 Fax: 503-229-6945 TTY: 503-229-5471	**Tim McFetridge, PE** 750 Front St NE, #120 Salem, OR 97301-1039 Phone: 503- 378-4995 Toll free in Oregon: 800-349-7677 Fax: 503-373-7944 TTY: 503-378-3684 **Jon Gasik, MS, PE** 221 Stewart Ave., Suite 201 Medford, OR 97501 Phone: 541-776-6242 Fax: 541-776-6262 Toll free in OR: 877-823-3216	**Heidi Williams, PE** 700 SE Emigrant, #330 Pendleton, OR 97801 Phone: 541-276-4063 1-800-304-3513 Fax: 541-278-0168

Table of Contents

Introduction 1
Purpose 1
Applicability 1
Regulatory Basis 1
General 2
Format 3
Contents 4
Table of Contents/Homepage: 4
Emergency Operations: 4
General: 4
Operation and Control of Unit Processes: 5
Operation and Control of Other Mechanical Systems: 7
Regulatory: Include the following (as applicable): 7
Appendices and Attachments 7
Submittals 9

Introduction

Purpose

This document is intended to help domestic wastewater treatment plant owners in writing operations and maintenance (O&M) manuals required by their permit. The use and reference of this information may improve the quality and usefulness of O&M manuals and reduce review time. Please note, however, that if any conflicts arise between this document and Oregon rules, regulations or the permit, then the applicable rules, regulations, and/or permit take priority over this document.

Applicability

The information in this document primarily applies to mechanical wastewater systems that either discharge to surface waters under a National Pollutant Discharge Elimination System (NPDES) permit, or irrigate recycled water under a Water Pollution Control Facilities (WPCF) permit. This document does not apply to satellite sewage pumping stations, lagoon systems, on-site (subsurface disposal) systems, or industrial wastewater treatment systems. For information regarding operations and maintenance of these other systems, please see:

- **Sewage Pumping Stations:** *Guidelines for Writing Pump Station O&M Manuals*, ODEQ, August, 1994
- **Lagoon Systems:** *Principles of Design and Operations of Wastewater Treatment Pond Systems for Plant Operators, Engineers, and Managers,* (EPA/600/R-11/088) August 2011
- **On-Site Systems:** *Guidelines for Writing Large On-site System Operation & Maintenance (O&M) Manuals for WPCF permitted facilities*, ODEQ, April 2000
- **Industrial Systems:** *Internal Management Directive, Operations, Monitoring and Management (OM&M) Plans for Land Application of Non-Sanitary Wastewater*, ODEQ, November 2002

Regulatory Basis

ODEQ regulates domestic wastewater systems under two types of permits. NPDES permits are for systems that may discharge to surface waters, and WPCF permits are issued to systems that do not discharge to surface waters. A permit is a legally enforceable agreement between the permit holder (permittee) and the ODEQ, as the permit issuer. Schedule F (General Conditions) of these permits requires proper operation and maintenance.

Oregon Administrative Rules Chapter 340 Division 52 requires domestic wastewater treatment facility owners prepare and received ODEQ approval of an O&M manual prior to operating.

General

An O&M manual should be targeted to operating the plant, especially in situations where time may be critical. It should be complete and thorough, but easy to use. It should not contain narrative copied from the Facilities Plan or Predesign Reports.

To present information in the most accessible manner, include less narrative and more drawings, schematics, tables, schedules, and checklists. An operator looking for a specific piece of information should not have to read an essay to find it. Avoid boilerplate language in favor of information that is specific to the treatment plant.

The manual should identify the author of the manual and any updates. The manual should also include the date prepared, finalized, and dates of any updates.

Format

Paper O&M manuals should be bound in 3-ring binders to accommodate future revisions. All manufacturers' literature should be bound separately. Sections should be tabbed and labeled as appropriate. Provide both cover and spine labels.

Electronic manuals (e-manuals) use a menu-driven or intuitive "drill down" navigation system that allows for quick retrieval of information. The user should be able to quickly and intuitively find the desired information without having to navigate an excessive number of sub-menus or links. Once at the desired information, the drill-down pathway should be easily identifiable.

For facilities that are committed to the electronic O&M manual format, a printed version is unnecessarily redundant and not required. However, all e-manuals must include:

1. Backup capabilities in case of computer failure; and
2. A printable user-guide on how to navigate and update the manual is required. The user-guide must describe log-in security features.
3. Manufacturers' literature in a print-friendly format (for example, pdf).

E-manuals should also:

1. Include an ever-present navigation menu with logically labeled tabs, buttons, or menu headings and drop downs. The user should be able to easily identify and return to the homepage with a single click.
2. Identify unit processes either graphically or via the menu system.
3. Be formatted and protected to easily allow necessary modifications and updates, but only by appropriate personnel. The e-manual should reflect when it was last updated.

NOTE: For satellite pump stations, ODEQ recommends a separate standalone O&M manual for each pump station in paper format. A satellite pump station is one that is not located at the wastewater treatment plant site. A printed copy of the O&M Manual should be maintained at each pump station.

Contents

The following is a recommended O&M manual outline.

Table of Contents/Homepage

The table of contents should correspond to the tabs. For e-manuals, the electronic menu system should act as a Table of Contents with tabs on the homepage.

Emergency Operations

This section should be separate and readily available in case of emergencies. Emergency phone numbers listed should include the Oregon Emergency Response System (OERS), local utility emergency contacts (gas, electric, and water), and the local ODEQ Regional Office. This section should include copy of, and/or link to, the emergency and SSO response plans. Describe or reference procedures for chlorine leaks, fires, gas leaks, power outages, etc.

General

a) Historical Background: Provide a narrative on the background and history on the facility. The level of description in ODEQ's approval letter for the project is a minimum. The engineer should be able to do better.
b) Overall Process Description: Briefly describe the type of treatment process employed and the various units or processes incorporated in the facility.
c) Plant Layout: Include plan-view diagrams of the plant and outfall, along with influent sewer manholes, pump stations, force mains, and any piped diversions, overflow dams, or bypass weirs. Show locations of power drops, main breakers, gas meters, backflow preventers, fuel tanks, chemical storage, and other such auxiliary equipment as may concern firemen responding to an alarm.
d) Design Data Table: Include design population and flows, design efficiency and effluent quality goals (BOD, TSS, ammonia, nutrients, etc), and design capacity for each process unit. The design data may normally be copied directly from the approved plans, which should include a complete listing as a reference.
e) Flow diagrams: Include simple schematics showing the individual units and flow sequence. Generally, separate diagrams for solids and liquids should be included.
f) Hydraulic Profile
g) Utilities: Include or reference a plan that shows how the plant is served with water, gas, electricity, phone, etc. The map should show the location of isolation valves, access points and other pertinent features. Describe the standby power system in detail. Provide explicit procedures to be followed on loss of utility power and conversion to standby power, and vice-versa. Develop a complete list of all non-maintained contacts that will have to be manually re-set on each occurrence. Describe the phasing of any start-ups controlled by time-delay relays. Provide instructions on which equipment to re-set and start up first. Tabulate whether various equipment items may be considered non-critical, describe which start-ups must be staggered, and provide instructions accordingly.
h) Preventative Maintenance & Asset Management Systems: ODEQ expects wastewater treatment plant owners to use an asset management system to schedule and track maintenance activities electronically. While commercial software packages can be expensive, EPA now offers a free, easy-to-use, asset management tool for small wastewater utilities known as Check Up Program for Small Systems (CUPSS). CUPSS includes preventative maintenance scheduling and is available at: http://water.epa.gov/infrastructure/drinkingwater/pws/cupss/index.cfm.

i) Operator and Management Responsibilities: Include operator certification requirements, plant staffing requirements, and a breakdown of workhours estimated to operate and maintain the facility. Include workhour allowances for continuing education for operators. Include delegation of authority. For instance, a discharge monitoring report (DMR) must be properly signed by a ranking elected official or their designated representative(s). Accordingly, the plant supervisor and/or operators must receive written delegation to sign DMRs.

j) Budget: Provide estimated budget costs for operating and maintaining the plant. The estimate should contain a breakdown by major category such as staffing and benefits, training, power, laboratory, parts, supplies, repairs, chemicals, sludge hauling and disposal costs, grit and screenings disposal, and so on.

Operation and Control of Unit Processes

Each unit process should be under a separate tab. The recommended unit process categories include: Influent Pump Station, Headworks, Primary, Secondary, Tertiary, Disinfection, Recycled Water, Solids Treatment/Storage, and Miscellaneous Equipment. Each unit process should contain the following information:

a) Description of Unit Processes:
   i) Describe each unit mechanically, including each unit component and its function.
   ii) Describe the feed. Prescribe normal operating positions of all gates and valves (normally open or closed). Provide a flow schematic showing valve, gate and pump locations, and employ and index system for identification.
   iii) Describe thoroughly the treatment process employed in each unit; chemical, biological, physical or combination.
   iv) Describe the relationship of each unit to adjacent units in the facility.
   v) Describe where and/or how additions or expansions to the plant are intended by the designer.

b) Control of Unit Processes:
   i) Describe thoroughly and in detail how each unit process is to be operated and how to control the unit process. Thoroughly discuss all applicable process control parameters. equipment item in detail. For example, a conventional activated sludge facility may employ any or all of the following parameters for process control: dissolved oxygen, settleable solids, suspended solids, volatile solids, total solids, total volatile solids, pH sludge volume index, sludge age, food to microorganism ratio, return sludge rate, and sludge wasting rate. These parameters should be defined and their significance to plant operation or process control thoroughly discussed. This discussion should include normal operational levels or ranges and how these levels are maintained. Include a discussion of solutions to common problems anticipated when operational ranges are not maintained. For parameters such as food to microorganism ratio, sludge volume index, sludge age, return sludge rates, give formulas and examples for calculating respective values. Often manufacturers have developed general guides, which can be adapted to a particular process.
   ii) Either in this section or an appendix should include forms for recording startup conditions. Forms for pump curves showing actual impeller trim and motor HP installed. Provide a tabulation of all control and alarm set-points and elevations. Normally, this can be copied from schedules in the plans or specifications. Either in the appropriate unit process section or in a "Forms" section, include forms for recording startup conditions. Forms may be developed by the engineer or adapted from the manufacturer's standard forms. The shutoff head, discharge head, and suction head of pumping equipment should be measured and recorded to create a basis for maintenance and also to estimate the actual pumping rate. Include the engineer's theoretical system-head design curve, with actual measured operating points entered at the time of start-up. Initial vibration levels should also be measured, diagrammed, and recorded for all major items of rotary equipment such as blowers,

pumps, and mixers. Power draws for each one at startup should be measured and recorded, including normal and shutoff, for future reference.

c) Common Operating and Control Problems:
   i) Discuss common operating problems such as: foaming, frothing, sludge bulking, rising sludge, ashing, shock loads, hydraulic washouts, short circuiting, and insufficient oxygen. Include the probably causes and possible remedies. Where appropriate, describe means by which the operator may visually identify certain problems.

d) Alternate Operational Modes
   i) Describe, if applicable, alternative operational modes. Include flow diagrams and valve settings. Discuss any changes in unit process control that may be necessitated by the alternative mode. Discuss any change in treatment efficiency.

e) Emergency Operations and Failsafe Modes
   i) Discuss all applicable failsafe features or features incorporated into design, such as: warning devices, standby power, high water, and overload alarms.

f) Start Up Procedures
   i) Discuss preparation for start-up. Include a discussion of pre start-up inspection, checklist, staffing duties and responsibilities, dry run, wet run, etc.
   ii) Devise and discuss a start-up procedure for each individual unit in regard to mechanical operation and unit process. Discussion should include relationship to overall plant operation. Discuss process monitoring and objectives desired during various stages of start-up phase. Describe any special technique that may be applicable, such as sludge seeding.

g) Equipment Maintenance Summary
   i) As discussed above, ODEQ expects wastewater treatment plant owners to schedule and track maintenance activities electronically. Accordingly, this section should include a completed spreadsheet from the electronic maintenance scheduling system to be used. The engineer must normally extract these items from the manufacturer's O&M information provided with each item of equipment. Plant maintenance staff should carefully review any engineer's draft of this section before it is finalized.
   ii) List all equipment suppliers and service reps telephone numbers and contact information.
   iii) Include a list of critical replacement parts that may have long delivery times associated with them. Normally the equipment manufacturers can make helpful recommendations. Indicate where the spares are to be stored.

h) Safety
   i) Keep Material Data Safety Sheets, (MSDS) available and up to date. Reference their location.
   ii) Discuss safety precautions: Prescribe means of preventing and/or procedures for testing for hazardous conditions, specifically toxic or explosive gases. Discuss and define Confined Space entry requirements.
   iii) Prescribe first aid procedures for dealing with accidents involving personal injury or provide a first aid handbook and training.

Operation and Control of Other Mechanical Systems

Such systems may include alarms, telemetry, emergency power and fuel transfer systems, landscaping irrigation, chemical feeders, HVAC, seal water, level controls, flowmeters, samplers, and so on. Provide information on how these systems work, and their operation and maintenance requirements. Supplement with appropriate diagrams as necessary. Any of these may be sufficiently complex to warrant a separate section in the manual.

Regulatory: Include the following (as applicable)

a) Copy of the permit

b) Draft Discharge Monitoring Report (DMR) form: See *Completing Discharge Monitoring Reports (DMRs)*, ODEQ, February 2012: http://www.deq.state.or.us/wq/wqpermit/docs/domdmrinstr.pdf

c) SSO response plan: See *Internal Management Directive, Sanitary Sewer Overflows (SSOs)*, ODEQ, November 2010: http://www.deq.state.or.us/wq/pubs/imds/SSOEnforcement.pdf

d) Laboratory QA/QA plan: See *QA GUIDANCE FOR SELF MONITORING LABORATORIES (NPDES and WPCF)*, ODEQ, October 2010: http://www.deq.state.or.us/lab/techrpts/docs/NPDESWPCF.pdf

e) Recycled Water Use Plan: See *INTERNAL MANAGEMENT DIRECTIVE, IMPLEMENTING OREGON'S RECYCLED WATER USE RULES*, ODEQ, June 2009: http://www.deq.state.or.us/wq/pubs/imds/RecycledWater.pdf

f) Biosolids/Sludge Management Plan: See *Internal Management Directive, Implementing Oregon's Biosolids Program*, ODEQ, December 2005: http://www.deq.state.or.us/wq/pubs/imds/biosolids.pdf

g) Hauled Waste Acceptance Plan: See Guidance Manual for the Control of Wastes Hauled to Publicly Owned Treatment Works, USEPA, EPA-833-B-98-003, September 1999: http://www.epa.gov/npdes/pubs/hwfinal.pdf

h) Sewer Use and/or Pretreatment Ordinance

Appendices and Attachments

a) **As-Built Drawings**. One set of reproducible drawings should be obtained from the design engineer and stored in a permanent archive. Alternatively, electronic versions of the as-built drawings should be linked or stored as part of the e-manual. One complete set of paper as-built record drawings should also be kept on file at the treatment plant.
b) **Manufacturer's O&M Literature**. Provide a list of manufacturers/suppliers and phone contacts for ordering equipment and spare parts. Cut-sheets and other manufacturer's literature should be contained in paper binders. General brochures and literature, if provided, should have irrelevant information marked out and/or relevant information highlighted. Information on equipment not provided or not applicable should not be included. (Reference, but do not submit to the State)
c) **WWTP Operating References**. Relevant publications on treatment plant O&M should be referenced or linked where appropriate. Links to relevant websites or e-publications are also encouraged.
d) **Post Startup Addendum**. This section should be provided to the operator to address any issues or alterations to the manual as a result of changes in intended operations during startup.

NOTE: At the writer's discretion, any applicable charts, graphs, guidelines, or documents that may be significant and useful to plant operation and maintenance should be included in the appendix. It is not necessary to submit these items for review.

Submittals

Submit complete draft O&M manuals for review by ODEQ and the plant operations staff well in advance of scheduled start-up (at least 90 days). Sewage treatment utilities are not authorized to accept or use treatment works without an approved manual, per OAR 340-52. For that reason, late submittal of the draft manual may delay plant start-up.

Manuals are expected to be maintained current through updating a master copy of the manual kept at the plantsite. This expectation also applies to ODEQ's file copy of the manual. Utilities should submit copies of insert pages reflecting all physical and procedural changes to ODEQ. For e-manuals, utilities may submit updated complete copies with the changes highlighted.

Volume 3, Issue 3 Summer 2022

EthicsMatters

In this issue >>> Gifts

- Legislative & Administrative Interest
- Travel Gift Exception
- Is it a Gift? Flowchart
- Requesting Advice
- Commission Updates

Commission Members

Dave M. Fiskum, Chair
Amber A. Hollister, Vice-Chair
Dan Mason
Karly Edwards
Shawn Lindsay
Alicia A. McAuley
Jonathan Thompson
Vacancy (1)
Vacancy (2)

Staff

Ronald A. Bersin, Executive Director
Susan Myers, Compliance & Education Coord.
Becky Maison, Operations & Policy Analyst 2
Hillary Murrieta, Investigator
Monica Walker, Investigator
Stephanie Heffner, Trainer
Vacancy, Trainer
Kathy Baier, Administrative Staff
David Hunter, Administrative Staff

Oregon Government Ethics Commission
3218 Pringle Road SE, Suite 220
Salem, Oregon 97302
503-378-5105
mail@ogec.oregon.gov
www.oregon.gov/ogec

What is a Legislative or Administrative Interest?

During a calendar year, a public official, or their relative or household member, may not solicit or receive any gift(s) valued in excess of $50 from a source that could reasonably be known to have a legislative or administrative interest. [ORS 244.025(1)]

To know if you can accept a gift or offer, you will need to determine whether the source of the gift could have a legislative or administrative interest in your decisions or votes as a public official.

A legislative or administrative interest is an economic interest, distinct from that of the general public, in any matter subject to the public official's decisions or votes. [ORS 244.020(10)]. So if a public official is in a position to take action or make a decision that could have an economic effect on the source of the gift, and if that economic effect is distinct from the effect on the general public, then the source of the gift has a legislative or administrative interest in the public official's decisions or votes.

An economic interest distinct from that of the general public is when an action affects the source of the gift in a different way or to a greater degree than it affects the general public. For example, a tuition increase will affect all registered students; however, a decision to award a scholarship to Becky has an economic effect on her that is distinct from the effect on the general public.

Continued on page 2

What Is a Legislative or Administrative Interest? (Continued)

Remember:

- If the source of a gift or offer *could have* a legislative or administrative interest in your decisions or votes as a public official, you cannot accept the gift/offer if it exceeds $50 from that source in a calendar year.

- If the source of a gift or offer *could not have* a legislative or administrative interest in your decisions or votes as a public official, you can accept the gift/offer, regardless of value.

Looking For A Speaker For An Event, Staff Training, Or Board Workshop?

OGEC's skilled trainers offer free customized one - two hour trainings on:

- Oregon Government Ethics law
- Executive Session provisions of Public Meetings law
- Lobby Registration law

Participants will hear real world examples, be able to ask questions, and walk away with resources that will help them comply with the law.

More information can be found online at oregon.gov/ogec/training or contact us at training@ogec.oregon.gov.

Examples of Legislative & Administrative Interests

There are many examples of legislative or administrative interests. Here are just a few:

- A cell phone provider has a legislative or administrative interest in a District Board Member who can vote to award a contract to that provider.
- A resort owner has a legislative or administrative interest in an agency administrator who can authorize travel plans for their employees.
- A property owner has a legislative or administrative interest in a city councilor or planning commissioner who can approve their development application.
- A public employee has a legislative or administrative interest in their boss, who can promote them or give them a raise.

How Are We Doing?

OGEC is conducting our annual customer satisfaction survey. Your comments help us determine what we are doing right and what we can improve upon.

2022 Customer Satisfaction Survey

We appreciate you taking a few minutes to share your thoughts and participate in the survey by August 31, 2022.

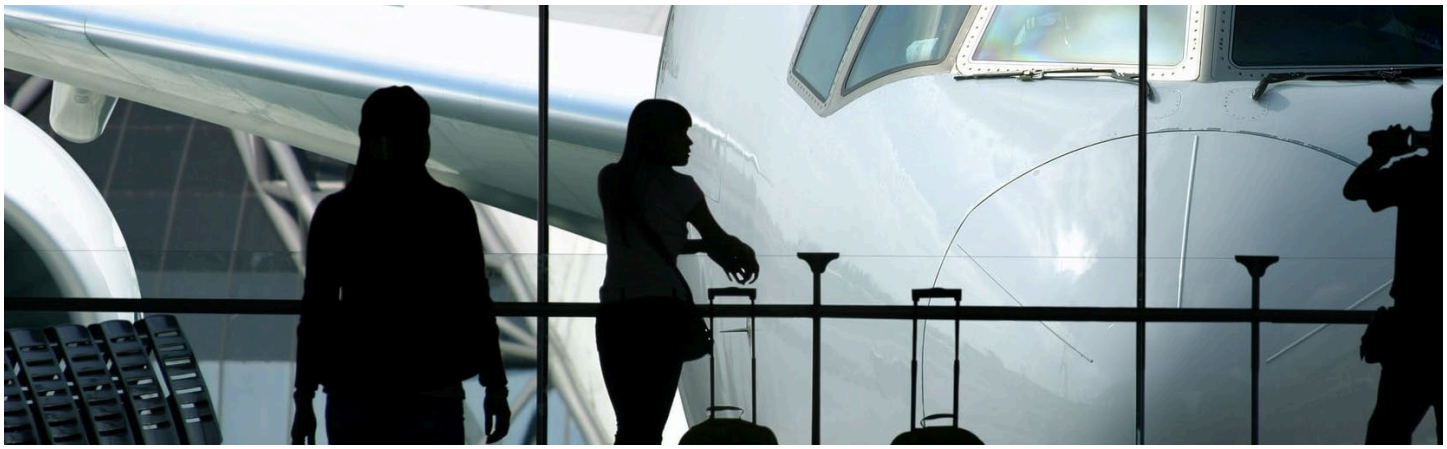

Invited To An Event?

With the excitement of being able to meet in person again, invitations to events are everywhere. Sometimes these invitations come with an offer to pay for your expenses. There are two exceptions to the definition of gift in ORS 244.020(7) which may allow public officials to accept such offers. Let's take a closer look at one of these provisions: ORS 244.020(7)(b)(F).

Public officials may accept payment of reasonable expenses paid by specific entities for attending conventions, fact-finding missions or trips, conferences, or other meetings. To qualify for this exception, the public official must be representing their government body, delivering a speech, making a presentation, or participating in a panel discussion at the event.

For this exception, what specific entities can pay for the expenses?

- Government entities: units of federal, state or local government
- Native American tribes that are federally recognized or formally acknowledged by a state
- Membership organizations to which a public body pays membership dues
- 501(c)3 nonprofit corporations

If you receive an offer to pay your expenses to attend an event or tour, remember Commission staff are always available by phone or email to provide guidance on whether you can accept the offer.

What Is A Fact-Finding Mission?

Activities directly related to the public official's duties that:

- have a cultural or educational purpose
- provide intergovernmental assistance, such as for the purpose of international aid or sharing best practices
- develop intergovernmental relationships

The sponsor of a fact finding mission should be directly and immediately associated with the event or location being visited.

Step 1: Is it a gift?

The restrictions in ORS 244.025 limit gifts that can be accepted by a public official, candidate, or a relative, or member of the household of a public official or candidate.

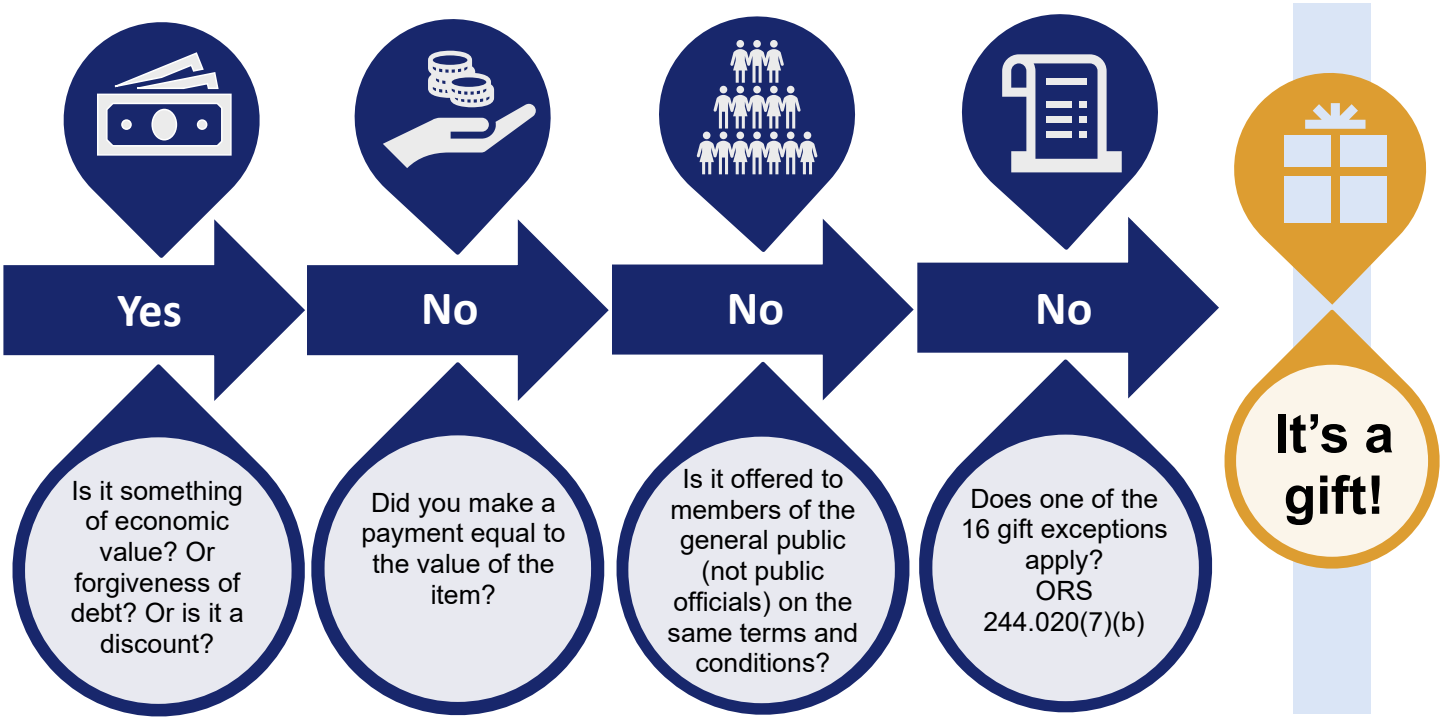

Step 2: Legislative or Administrative Interest?

Who is the source of the gift?

The source is the ultimate payer of the expense. OAR 199-005-0030

Does the source have a legislative or administrative interest?

Are you in a position where you could take official action that could have an economic impact on the source of the gift that is distinct from that of the general public? ORS 244.020(10)

What is the value of the gift?

What is the fair market value of the item. OAR 199-005-0005

You must keep track of the value of all gifts from the same source during the calendar year.

Step 3: Can you accept the gift?

Advice Requests

One of OGEC's core functions is to provide advice on the laws within its jurisdiction. OGEC staff may only provide advice on future or hypothetical scenarios, not events that have already occured. OGEC staff provide informal advice, by phone or email, as well as written staff advice and advisory opinions.

Staff Advice

If a complaint is filed and a violation found, the Commission will consider a public official's good faith reliance on staff advice before imposing a penalty. [ORS 244.284]

Staff Advisory Opinion

If a complaint is filed and a violation found, the Commission may only issue a letter of reprimand or education to a public official who acted in good faith reliance on a staff advisory opinion. [ORS 244.282]

Commission Advisory Opinion

If a complaint is filed and a violation found, the Commission may not impose a penalty on a public official for any good faith action taken in reliance on a commission advisory opinion. [ORS 244.280]

Request Advice

OGEC Office
503-378-5105

E-mail
mail@ogec.oregon.gov

Finding Issued Advice

Advice issued by the Commission is available to view online. Advice in the OGEC database is searchable and available at anytime.

To search and view advice visit the OGEC database **oregon.gov/OGEC/CMS/Advice**

Welcome Hillary Murrieta

In March, Hillary joined OGEC as an Investigator. We asked Hillary a few questions to get to know her.

Tell us about your background?

I graduated from the University of Oregon with a political science degree. After college, I spent six months as an au pair in Cartagena, Spain. When I returned, I found a job with Metropolitan Public Defender in Washington County, first as a legal assistant and then as an investigator. I spent over three years doing misdemeanor, minor and major felony, dependency, and delinquency cases. I then spent about eight months with the Parent Child Advocacy Division of the Multnomah County Office.

What inspired you to apply for OGEC?

I knew I wanted to continue being an investigator and was incredibly lucky to stumble across the position with OGEC; it piqued my interest immediately. I've always wanted to learn more about local governments across Oregon, so the ability to combine that with doing investigative work was a win-win for me.

Any hobbies or passions?

I am in a book club called "Women Who Read and Drink." I enjoy needlepointing, hiking/walking with my dog Buffy, watching trashy reality tv, playing Dungeons and Dragons, and anything The Witcher (tv, books, video game).

Commission Updates

It is always difficult saying "Goodbye" to Commissioners. Commissioner Robert Johnson joined OGEC in November of 2021 and we were excited to have him as part of the Commission. In May, Commissioner Johnson was elected judge and on June 7th, 2022, he was appointed to Oregon 16th Judicial District Circuit Court.

What inspired you to apply to be a member of the Oregon Government Ethics Commission?

Ethics is a central part of my personal and professional life. I thought that my personal perspectives and professional experience would serve Oregonians perfectly on OGEC.

Unfortunately, my stay was short, but I am confident that OGEC is in good hands as I transition on to the circuit court bench.

What aspect of the Commission did you enjoy or appreciate the most?

I appreciated the collaborative nature of the commission. The other commissioners were extremely helpful and professional, and it really made my service an enjoyable experience.

What are some key takeaways that you would care to share with current and/or future Commissioners?

I feel like serving on the commission is about moving things in the right direction. Of course, accountability is a part of that, but I really respect how OGEC is committed to education and making sure that Oregonians are protected by addressing issues creatively and compassionately.

We wish Judge Johnson all the best in his new role.

OGEC Commissioners are allowed to serve on multiple boards or agencies, but they cannot be a part of both the Judicial and Executive branches of government at the same time. Commissioner Johnson had to step down from the Commission once sworn is as a circuit court judge because the circuit court is part of the Judicial branch and OGEC is part of the Executive branch.

Join OGEC!

Have you considered representing your fellow Oregonians by serving as an OGEC Commission member? Commission members are vital participants in statewide decision-making.

The Oregon Government Ethics Commission meets on Fridays, every six weeks to decide on alleged violations of the Government Ethics law, Lobby Regulations, and exexutive session provisions of Public Meetings law. Commissioners can join the meeting in-person or virtually.

Apply through Workday!

Upcoming Commission Meetings

- **August 19, 2022**
- **September 23, 2022**

Find out more under the OGEC meeting section at **oregon.gov/ogec**

Oregon Government Ethics Commission

3218 Pringle Road SE
Suite 220
Salem, OR 97302

(503) 378-5105
mail@ogec.oregon.gov
www.oregon.gov/OGEC