CITY COUNCIL MEETING AGENDA

July 03, 2024 at 5:30 PM

Council Chambers at City Hall - 1123 W. Lake St. Sandpoint, Idaho

---

Call to Order

Roll Call

Pledge of Allegiance

Announcements and Reports

1. Presentation: Better Together Animal Alliance

Public Forum

Consent Calendar - action item

2. Approval of Minutes from Council's June 20, 2024, Special Meeting - ***action item***
3. Approval of Minutes from Council's June 20, 2024, Regular Meeting - ***action item***
4. Payables Report / Bills for Payment Approval - ***action item***
5. Proposed Resolution: Professional Services Agreement with Tischlerbise, Inc., for Development Impact Fee Study (City Agreement No. A24-1910-4) – ***action item***

Old/Unfinished Business - none

New Business

6. Proposed Resolution: Change Order No. 1 to Agreement with Ginno Construction of Idaho, Inc., for Construction of Inclusive Playground and Splash Pad at Travers Park (City Agreement No. A24-5300-6) - ***action item***
7. Discussion: Policy on Remote Public Comment

Adjourn

Public Participation Options and Information

Before the meeting, comment in writing: Email cityclerk@sandpointidaho.gov or deliver to City Hall.

Attend in person: See above for meeting location. Seating available on first-come, first-served basis.

Watch/listen live online: Register at https://www.sandpointidaho.gov/your-government/meetings.

After the meeting, view the recording on YouTube: https://www.youtube.com/c/CityofSandpoint.

PLEASE NOTE: Comments are allowed remotely by prior special accommodation request only.

For questions or requests for special accommodation: At least 48 hours prior to the meeting, send a message to the email address above or call (208) 263-3310.

Assisted listening devices available in chambers for use during public meetings.

Received By
JUN 20 2024
City of Sandpoint Idaho

SANDPOINT CITY COUNCIL AGENDA REQUEST FORM

Today's date: 6/14/24

Date of meeting 7/3/24

(City Council meetings are held the 1st and 3rd Wednesday of each month.)

Name of Citizen, Organization, Elected Official, or Department Head making request:

Kyle Schreiber

Address: 1123 W. Lake St, Sandpoint ID

Phone number and email address: kschreiber@sandpointidaho.gov

Authorized by: Justin Dick
name of City official *City official's signature*

(Department Heads, City Council members, and the Mayor are City officials.)

*Subject: Better Together Animal Alliance

Summary of what is being requested: Presentation by BTAA

The following information MUST be completed before submitting your request to the City Clerk:

1. Would there be any financial impact to the city? **Yes or** ☒ **No**

   If yes, in what way? _____

2. Name(s) of any individual(s) or group(s) that will be directly affected by this action: — Have they been contacted? **Yes or No**

   No Action - info only

3. Is there a need for a general public information or public involvement plan? **Yes or** ☒ **No**
   If yes, please specify and suggest a method to accomplish the plan: N/A

4. Is an enforcement plan needed? **Yes or** ☐ **No** ☒ Additional funds needed? **Yes or** ☐ **No** ☒

5. Have all the affected departments been informed about this agenda item? **Yes or** ☐ **No** ☐

This form must be submitted no later than 6 working days prior to the scheduled meeting. All pertinent paperwork to be distributed to City Council must be attached.

ITEMS WILL NOT BE AGENDIZED WITHOUT THIS FORM

***City Staff, please check one box:** Consent ☐ Old Business ☐ New Business ☐ Other/Unknown ☑

CITY COUNCIL SPECIAL MEETING/COMPREHENSIVE PLAN WORK SESSION MINUTES

June 20, 2024 at 4:00 PM

Council Chambers at City Hall - 1123 W. Lake St. Sandpoint, Idaho

Call to Order

Under the Mayor's direction, Community Planning and Development Director Jason Welker called the Sandpoint City Council special meeting/work session to order in Council chambers at Sandpoint City Hall, 1123 W. Lake St. in Sandpoint, Idaho.

Roll Call

PRESENT
Mayor Jeremy Grimm
Councilor Joel Aispuro
Councilor Justin Dick
Councilor Kyle Schreiber
Councilor Pam Duquette
Councilor Rick Howarth

ABSENT
Councilor Deb Ruehle

Council-Staff Work Session

1. Review of Proposed Edits to Chapters 6-12 of the Updated Comprehensive Plan

   Mr. Welker reviewed and discussed with the Mayor and Council members the proposed edits to the City's draft updated Comprehensive Plan, particularly Chapters 6 - 12. The table attached as **Exhibit A** to these minutes reflects a compilation table of the edits to the draft Plan, along with additional edits and notes from the City's Comprehensive Plan consultant, which were added following the meeting. It was noted that adoption of the updated plan would be considered following a public hearing that would be scheduled for Council's regular meeting on July 17, 2024.

The work session ended and was adjourned at 5:09 p.m.

Exhibit A to 6/20/24 Work Session Minutes

City of Sandpoint Comprehensive Plan

Review workshop changes & edits

Notes taken by Planning staff, encompassing the suggestions made during the work sessions on chapters 1-5 and additional edits suggested by councilors via email on chapters 6-12.

Acknowledgements & Introduction	
i.i.	updating Acknowledgements page to include new Mayor and Councilors; confirming Steering Committee participation is reflected correctly; Mayor Jeremy Grimm Former mayor Shelby Rongstad City Council: Deb Ruehle (City Council President) Joel Aispuro Justin Dick Rich Howarth Pam Duquette Kyle Schreiber Kate McCallister (former) Andy Groat (former) Jason Welker (former) Planning and Zoning Commission John Hastings, Chairman Wayne Benner Mose Dunkel Amelia Boyd Grant Simmons Ivan Rimar Scott Torpie Cate Huisman (former) Slate Kamp (former) Ben McGran (former) Luke Omodt (former) Tom Riggs (former) Forrest Schuck (former) Jason Welker (former) Sandpoint City Staff Cheryl Hughes, Central Services Director Sarah Lynds, Finance Director Jason Welker, Community Planning & Development Director

	Brandon Staglund, City Engineer Maeve Nevins-Lavtar, Parks, Planning and Development Manager Heather Upton, Art and Historic Preservation Officer Corey Coon, Police Chief Gavin Gilcrease, Fire Chief Bill Dean, City Planner Radhika Bipin, Assistant Planner Pete Skon, Building Official Katheryne Bradbury, Recreation Superintendent Melissa Ward, City Clerk Cassidy Brocaille, Deputy City Clerk
i.v.	Remove Appendix E, Downtown Waterfront Design Competition Report, and removing reference to the report within Chapter 3
	Chapter 1 Introduction
5	updating public participation data to reflect recent engagement events: "**26 Board, Commission, and Steering Committee Meetings."**
8	3rd paragraph, revise to: "Northwest Company fur trader David Thompson was one of the first settlers to establish a relationship with tribes in the area~~, including the Kalispel,~~ and helped establish fur trading in the area in 1809."
9	Update timeline bubbles as follows: Bubble number: 1: **Pre-1810:** The local Native tribes utilized Sandpoint as their summer encampment. 2: **Change date to 1810:** European fur trader David Thompson, establishes trading posts 3. Remove third bubble (1890) 5. **1898:** Farmin family acquires title to 160 acres west across Sand Creek and plats a new townsite 6. **1901:** Humbird Lumber Company is established, employing hundreds of workers 7. **1907:** Sandpoint becomes a City with a Mayor/Council form of government 8. **1910:** Long Wooden Bridge over Lake Pend d' Oreille is completed
9	3rd paragraph, revise to: "In 1892, Great Northern Railroad arrived in what is now Bonner County. Its first agents were L.D. Farmin and his wife Ella Mae. The Farmins acquired the title to 160 acres along the west edge of Sand Creek, a portion of which they soon had platted for a new townsite. Fires in the 1890s, coupled with regular floods and limited room to grow, nudged commercial businesses east of the creek to relocate to the new townsite west of Sand Creek. To this day, most commercial sites in Sandpoint still border the west side of Sand Creek, within the Farmin's original platted townsite.
9	6th paragraph, revise to: "By mid-1908, work had begun on the **Long Wooden Bridge** ~~bridge~~ connecting Sandpoint and Sagle. It was completed in 1910 and was just under two

Commented [MM1]: Removed the full last paragraph from page 32

Commented [MM2]: Need to mess with format for all these bubbles to fit.

	miles in length. The bridge was replaced and dedicated in 1934 and replaced again in 1956.
	Chapter 2 Community Vision
20	Revise bullet points as follows: • Sandpoint's natural beauty, open space, and scenic views should be protected through thoughtful development patterns. • Growth close to daily needs and existing services should be prioritized and future city expansion managed to preserve natural features **and wildlife habitat** and ensure services are not overburdened. • A mix of land uses and high-quality development that fosters **walkable,** accessible and enduring neighborhoods should be encouraged. • Recreational access to the surrounding lake, forests, and other natural features should be balanced with environmental protection and stewardship. • Our clean water, air quality, dark skies, and other natural resources should be safeguarded.
	Chapter 3 Community Character & Design
27	Under the "Highlights" section, revise: "Several City Boards and Commissions work to preserve and enhance the city's character, including the Sandpoint Arts, Culture and Historic Preservation Commission and ~~Tree Committee~~ **Urban Forestry Commission.**"
28	1st paragraph, revise to: "Sandpoint celebrates a thriving culture supported by its rich history and strong ~~arts council~~ **arts organizations**.
28	2nd paragraph, revise to: "~~Festivals~~ **Events** such as the ~~Sandpoint Music Fest~~ **Festival at Sandpoint**, Arts and Crafts Fair…"
30	Revise, "In an effort to increase the urban canopy beyond public spaces, **the** "NeighborWoods" ~~was a former~~ program **was** created to provide trees at no cost to property owners in exchange for their commitment to care for and nourish the new trees along the public right of way…"
35	Goal 4, D, revise to "D. ~~Secure~~ **Establish** diversified and sustainable funding to bring…"
	Chapter 4 Land Use & Growth
38	Revise the subheading "Heavy commercial/Industrial" to **"Light Industrial"** Change "Heavy Commercial/Industrial" to "**Light industrial**" in first sentence beneath this subheading
39	Revise, "Due to ~~pending~~ legislative changes **passed into Idaho law in 2024** ~~that will affect~~ **that affected** ACI requirements, the negotiation of a new boundary and agreement are included as implementation steps in Appendix A"
41	Revise the 1st bullet point under "Low Density Residential (LDR)" to: "Lot sizes: ~~4,000~~ **5,000** – 7,000 square feet

42	Update all references to "industrial" to "**light industrial**"
43	Under "Very Rural (CA-VR): Revise, "Very Rural areas are appropriate for designation as sending areas if a formal **transfer of development rights (**"TDR"**)** program is implemented by the City.
44	Revise the future land use map to put the western edge of the former University of Idaho property into "neighborhood mixed-use", where it is currently designated as Low Density residential, Medium Density Residential, and High Density Residential. On the map this means adopting the proposed edit shown on the left.  Proposed Edit  Draft Update Map
44	Future land use map: Change names of N/S Avenues from "1st, 5th…" to "**First Ave, Fifth Ave**." We do not use numerals in our downtown street names, rather the spelled-out words. This change needs to be implemented to all maps showing downtown street names.
45	Same edit to street names as described for page 44
46	Goal 2, B: Revise to "Reasonably mitigate the effects of new development on existing neighborhoods, **creating standards that encourage protecting heritage trees and native vegetation.**"
46	Goal 2, add: "**G: Encourage sustainable building practices for residential construction.**"
48	Goal 5, A, revise from "Renegotiate the ACI as an area that can reasonably be served by the City in the next ten (10) years." To, "**Continually collaborate with Bonner County and adjacent cities to renegotiate the ACI as an area that can reasonably be served by the City as required by law.**"
48	Goal 5, add: "**I: Discourage extension of urban level utilities in the ACI for low density development, and consult other municipalities when providing services in their ACIs.**"

Commented [MM3]: Is the category updated to Light Industrial/Commercial? I don't really see any reference appropriate to change to "light industrial" in the description.

Commented [JW4R3]: Yes. Please change to "Light Industrial/Commerical"

Chapter 5 Housing & Neighborhoods	
52	Revise, "Of the available housing in Sandpoint, around 15% is vacant. According to the Idaho Housing and Finance Association (IHFA), a healthy vacancy rate is around 6%. Close to half of vacant housing is rented for seasonal, recreational, or occasional use. In comparison, Bonner County has close to 30% vacancy rate, with over three quarters used for seasonal, recreation or occasional use." To… "**According to the U.S. Census Bureau, approximately 20% of housing units in Sandpoint are used for seasonal, recreational, or occasional use. In Bonner County, this number is around 30%. These high numbers reflect the area's appeal as a destination for vacation homes and part-time residences, significantly impacting the overall housing market dynamics in the region**."
53	Revise 3rd paragraph, "**According to the Census Bureau,** ~~T~~the estimated median monthly rent ~~has~~ increased by about ~~32%~~ **40.8%** ~~since~~ **between** 2010 **and 2020**, from $738 to ~~$915~~ **$1,039**. The 2020 **American Community Survey by the Census Bureau (**ACS**)** estimated the median housing value at $282,600, but more recent analysis shows that the current housing market supports a median sales price closer to $515,000**, with rents thought to have risen proportionally since 2020**. With HUD's 30% cost burdened metric, analysis shows that with Sandpoint's median household income of ~~$46,712~~ **$60,208** (ACS 2020), homeownership **and even rental housing in Sandpoint** is out of reach for many without becoming cost-burdened."
57	Goal 1, B: Revise, "Encourage housing above retail in mixed-use and commercial centers for year-round and ~~short-term~~ **seasonal** housing options and to enhance community vitality."
57	Goal 1, E: Revise, "Encourage development of single-family housing ~~on small parcels (less than 5,000 square feet)~~ within traditional and medium-density neighborhoods."
57	Goal 1, add: "**F: Explore alternatives to parking requirements to encourage a variety of housing types for a broad spectrum of income levels and age groups.**"
57	Goal 2, revise wording: "Housing is available to meet the needs of low and moderate income ~~households~~ **workers**."
57	Goal 2, B: Revise to, "Encourage workforce housing through ~~density bonuses~~ **various means as allowed by law**."
57	Goal 2, C, revise to "Integrate smaller infill ~~accessory~~ units to allow for mixed-income residents."
57	Goal 2, D: revise to "Coordinate regionally on **a** housing **action plan focused on** strategies for low- and moderate-income populations ~~through a housing authority or other mechanism~~."
57	Goal 2, add: "**F: Consider alternate impact fee structures to promote diversity of home sizes and types.**"

58	Goal 3, B, revise to, "Support the formation of active neighborhood organizations to advocate for the needs and improvements of ~~existing~~ **all** neighborhoods.
58	Goal 3, C, revise to, "Continue to manage short-term rentals to mitigate adverse impacts on year-round residential neighborhoods **as allowed by law**."
58	Goal 3, E, revise to, "Maintain the historic architectural integrity of **all** neighborhoods."
58	Goal 3, I, revise to: "Maintain and enhance neighborhood tree canopies **through incentives and other accommodations**."
58	Goal 4, add: "**F: Encourage green building and energy efficient design**."
	Chapter 6 Multimodal Transportation
66	3rd paragraph: Revise to, "Highway 2 has many access points in the form of wide driveways and intersections that are often confusing and unsafe. Proposed improvements include limiting many of these driveways to be right-in and right-out only and reconfiguring intersections to allow for better safety for auto traffic as well as pedestrians. **In the long run, the City supports exploring the feasibility of a western bypass for Highway 2**."
68	Goal 1, A: Revise to "Enhance access to businesses, shops, restaurants, and other destinations through ~~on-street parking, a sufficient supply of car and bike parking, parking management solutions, and convenient, accessible parking areas~~ **parking management solutions ensuring convenient, accessible parking areas for cars and bicycles**."
68	Goal 1,B, revise to: "Improve and enhance safety and traffic circulation to preserve an acceptable level of service (LOS) at intersections **without jeopardizing pedestrian safety**."
68	Goal 1, E: Revise "~~Limit the number of approaches onto collectors and arterials to minimize safety conflicts between pedestrians, bicyclists, and cars and trucks and preserve the function of the multimodal corridor~~. **Balance the benefits of a limited number of approaches onto arterials with the benefits of gridded streets**."
68	Goal 1, F: REMOVE COMPLETELY
68	Goal 1, G: revise to, "Review and implement a strategy to improve street lighting for improved safety while maintaining a balanced approach with the dark sky ordinance, **replacing existing lights with the most energy efficient lighting solutions available.**"
69	Add a Goal 3, D: **"Explore parking options at the entrances to town, encouraging efforts to reduce car-dependence such as ride-sharing and bike-share programs, while considering the needs of the elderly and disabled populations for accessible parking close to downtown businesses."** Add a Goal 3, E: **"Implement wayfinding and place-making signage at parking lots to direct visitors to key shopping and dining areas within Sandpoint's commercial center."**

69	Goal 4, E: revise to, "Ensure that transportation projects include measures such as native plantings in landscaping**,** ~~and~~ use of green stormwater infrastructure, **and considerations for reducing carbon emissions."**
71	Goal 8: C: Revise to **"Coordinate with Idaho Transportation Department in setting project…"**
71	Goal 8, add **"F: Evaluate opportunities for development of electric vehicle (EV) charging infrastructure to make Sandpoint an attractive destination for EV owners."**
	Chapter 7 Parks, Recreation, & Trails
74	1st paragraph under "Framework." Change "A watershed recreation master plan for this property is currently being developed to balance the needs of the many users, while safeguarding water quality." to… **"In 2023 a watershed recreation master plan was adopted (Appendix F of this plan), which balances the needs of the many users with safeguarding water quality."** Delete the sentence, "When completed, the plan will be incorporated into the Comprehensive Plan as Appendix F."
76	2nd paragraph, remove "Open Space Division" from "The City's Parks, Recreation & Open Space Division" Check throughout chapter 7 to remove "Open Space Division" references
77	Goal 1, A, revise to "Improve and expand trail and pathway connectivity to continually enhance community walkability and bike-ability **while considering impacts on wildlife corridors**."
77	Goal 1, C, revise to "Explore additional land acquisition for new parks **(including passive parks)** near newer or underserved neighborhoods."
77	Goal 1, E, revise to "Cultivate partnerships to support additional recreational facilities and amenities **that are equitably distributed across Sandpoint to benefit all residents**."
77	Goal 1, F, revise to "Increase**, enhance, and protect** public access to **open spaces and** the community's shorelines**, including existing rights-of-way.**"
77	Goal 1, G, revise to "Explore alternative uses for community open space such as plazas**,** ~~or~~ community gardens, **and dog parks**."
77	Goal 1, H, revise to "Design and work toward a zero waste parks and recreation system **by supporting recycling efforts at parks and outdoor events.**"
	Chapter 8: Public Facilities, Services, & Utilities
83	Under Wastewater Utility, 2nd paragraph: "~~The City plans to replace the wastewater treatment plant at its current location within the next 5-10 years. Once complete, the new treatment plant will provide service well into the future~~ **The City has initiated the preliminary engineering report for the replacement of the wastewater treatment plant, which, once complete, will provide service well into the future.**"
85	Under Stormwater Management, last paragraph add a sentence: "Given expected growth rates, Sandpoint is likely to pass the population threshold of 10,000 residents at the time of the 2030 sentence, which will trigger requirement that the City is compliant with

Commented [MM5]: What is the department named now? City's Parks and Recreation Division? Needs clarification.

Commented [JW6R5]: The Department is called Community Planning & Development. We no longer have a separate Parks & Recreation Department. But within the CPD department we do have a Parks & Recreation Division.

	federal discharge regulations for stormwater treatment. For this reason, Sandpoint is exploring the implementation of stormwater development impact fees in its current DIF rate study."
89	Goal 1, F, revise to "Explore and support use of renewable energy sources such as **roof-top** solar and wind **and other clean energies in local economic development efforts."**
89	Goal 1, I, revise to "Continue to improve the community's stormwater management infrastructure**, educating the public on issues relating to stormwater management**."
90	Goal 4, add: "**D: Explore opportunities for waste reduction and transition to sustainable materials within city operations."**
90	Goal 4, A, revise to "Develop and support local markets for **compost,** recycled materials and products."
91	Goal 5, E, revise to "Use regional partnerships, emergency planning and shared resources to reduce loss of life and property from hazards (**climate-related hazards such as** fire **and** flooding, train derailment, etc.)
92	Goal 8, A, Revise to "Continually improve governmental outreach to and engagement with citizens and businesses **through such means as public surveys, townhalls, and workshops**."
	Chapter 9 Jobs & Economic Development
103	To the green box situation and possible options for the Baldy/Utility Property; Possible Options: Add bullet **"City Park/Open Space"**
103	To the green box for the City Parking lot, add a possible option: "Refurbish existing lot, add paid parking." Remove 2nd bullet point "development + additional city structured parking."
105	Goal 1, E: Add "light" to "E. Ensure an adequate supply of appropriately zoned land for a diversified mix of commercial, **light** industrial, and office uses."
~~105~~	~~Goal 1, add: "**G: Balance and diversify local economy while maintaining environmental compatibility."**~~
105	Goal 1, Add: "**H. Encourage appropriate businesses to locate in Neighborhood Mixed-Use zones to minimize the distance traveled for everyday goods/services and employment.**"
107	Goal 5, B: Revise to "Cultivate an active and vibrant street life with outdoor seating, comfortable sidewalks and pedestrian crossings, convenient bicycle parking, and transit stops**, promoting Sandpoint as a true walking town**."
	Chapter 10 Airport Facility
	Goal 1 Add: **"D. Explore opportunities for monitoring pollution, contamination, and health hazards generated by airport activities."**
	Chapter 11 Natural Resources & Hazards
121	3rd Paragraph, Revise: "…efforts to improve water quality and ~~eliminate~~ **control** invasive species will continue." See comment #218 for reasoning. 5th Paragraph, "…**Douglas-fir**… …western **white** pine…"

Commented [MM7]: Since this graphic is recreated from Leland's Housing and Economic Analysis document, I've also edited the caption to read: "Source: Recreated **and updated** from Housing and Economic Analysis, Sandpoint, ID, Leland Group"

Commented [JW8R7]: Perfect. Thanks.

Commented [MM9]: Just to clarify, you don't want this added? It's crossed out.

Commented [JW10R9]: Sorry. Yes. Council struck that recommendation at our last workshop. Do not add anything.

126	Goal 1, A: Revise "...natural areas within the Area of City Impact (ACI)**,** within city limits**, and on City-owned property** to maintain..."
127	Goal 4, add: "**H: Collaborate with Bonner County to develop a county-wide disaster preparedness plan that addresses community needs.**"

12. Implementation

1	Row 2: Remove entirely	Removes "Incorporate the results of the Downtown Waterfront Competition into the Comprehensive Plan."
1	Row 3: Remove entirely	Removes "Implement the projects and code updates necessary to implement the Downtown Waterfront Vision"
1	Row 10: Revise Summary to, "Develop and implement a workforce housing strategy and priority plan~~, including a regional housing authority~~."	The housing authority idea has been scrapped, removes reference to it.
2	Row 2: Revise Summary **"Amend Multimodal Transportation Plan to incorporate additional public input."**	Current language: "Implement projects and programs identified in the Multimodal Transportation Plan as funding allows."
2	Row 3: Revise Summary "Update Title 10 and the UATP to ensure standards, **minimize lane widths and** provide sufficient space for sidewalks, street trees, and snow storage."	Current language: "Update Title 10 and the UATP to ensure standards provide sufficient space for sidewalks, street trees, and snow storage."
2	Council suggested alternative: "~~Implement~~ **Review and revise** the site-specific Master Plans for City Beach, Downtown Waterfront, Travers Park, and the Little Sand Creek Watershed Recreation Master Plan."	Removes "Implement the site-specific Master Plans for City Beach, Downtown Waterfront, Travers Park, and the Little Sand Creek Watershed Recreation Master Plan."
3	Row 5: Revise to, "Revisit and refine public engagement to detail the various methods of engagement to be used for different projects or processes**; create a community involvement best practices policy."**	Articulates objective of adopting a policy for community engagement
3	Row 9: Remove entirely	Removes "Construct a parking structure as part of a public-private partnership."
3	Row 9: Replace existing objective with: "**Explore options for paid parking at city beach and downtown parking lot.**"	New effort to implement paid parking in downtown locations.

Commented [MM11]: I can't find/understand these revisions in Chapter 12 Implementation. Are they intended to update the Appendix? That was managed by Amy and I don't have the most recent version.

CITY COUNCIL MEETING MINUTES

June 20, 2024 at 5:30 PM

Council Chambers at City Hall - 1123 W. Lake St. Sandpoint, Idaho

Call to Order

The regular meeting of the Sandpoint City Council was called to order at 5:30 p.m. on Thursday, June 20, 2024, in Council chambers at City Hall, 1123 W. Lake St., Sandpoint, Idaho.

Roll Call

PRESENT:
Mayor Jeremy Grimm
Councilor Deb Ruehle, City Council President
Councilor Joel Aispuro
Councilor Justin Dick
Councilor Kyle Schreiber
Councilor Pam Duquette (arrived at 5:35 p.m.)
Councilor Rick Howarth
Mayor and all Councilors present.

Under the City's adopted Code of Ethics and Civility, Mayor Grimm, as the presiding officer, identified and designated Police Chief Corey Coon as the law enforcement personnel in the room who would be serving as sergeant-at-arms for the meeting.

Pledge of Allegiance

Mayor Grimm led all present in the Pledge of Allegiance.

Announcements and Reports

1. Blackrock Cleanup Presentation

   Local resident Steve Gill, who works for the Idaho Department of Environmental Quality, along with Steve Geiger, Mayor of the City of Ponderay, provided a presentation on the planned cleanup of the Blackrock area on the shores of Lake Pend Oreille.

With the department heads now mostly in place and the organization functioning as envisioned, Mayor Grimm reported on his new part-time City Hall office hours, currently planned for all day Tuesdays and Wednesdays, as well as Thursday mornings. He will still be available Mondays and Fridays, as needed.

The Mayor also reported that he had provided to the City Council a letter he had drafted to the Army Corps of Engineers, copied to Bonneville Power Administration, regarding Albeni Falls Dam operations and lake levels, with plans to send that letter as soon as possible.

Mayor Grimm and Finance Director Sarah Lynds will be meeting, individually, with Council members to answer questions regarding the FY2025 budget; those meetings are in the process of being scheduled.

Finally, the Mayor reported on the decision of the Sandpoint Planning and Zoning Commission, during their meeting the evening before, to approve the requested conditional use permit and variance that will allow plans for construction of a new resort hotel at City Beach to proceed, replacing the current Best Western Edgewater Resort.

Police Chief Coon announced that Jackie Hanson would be retiring after 46 years of service with the Sandpoint Police Department. He presented Ms. Hanson with a certificate and an award, to applause and congratulations from all present.

At the Mayor's request and invitation, department heads and departmental staff representatives each provided a brief report on current and upcoming activities and projects in their respective departments.

Public Forum

Mayor Grimm announced that the next item on the agenda would be Public Forum, which allows the public to address the Mayor and Council on items that are listed on the Consent Calendar or on any relevant City of Sandpoint related topic not included on the agenda. The Mayor then recited the procedure and rules for speaking during Public Forum and during other opportunities for general public comment during the meeting. The Public Forum was then held, providing an opportunity for members of the public to speak under the rules and procedure relayed by the Mayor. Information only; no Council action.

Consent Calendar

The Consent Calendar, as outlined below, was approved as amended, with Councilor Howarth removing Item 5, Change Order to B&E Electric Agreement for SCADA Upgrade; Item 6, Amendment to Contract with Logan Simpson for Comprehensive Plan Update; and Item 7, Amendment to Contract with Jacobs Engineering for City Planner Services. These items were taken up by the Council at the end of the regular agenda under New Business.

Motion made by Councilor Dick, Seconded by Councilor Duquette.
Voting Yea: Councilor Ruehle, Councilor Aispuro, Councilor Dick, Councilor Schreiber, Councilor Duquette, Councilor Howarth

2. Bills approved for payment: $1,087,731.53 for regular payables
3. June 5, 2024, City Council meeting minutes approved as presented
4. Council Confirmation of Mayor's Appointments to the Sandpoint Sustainability Committee

   (The term expiration date is noted next to each board member's name.)

   Wayne Benner – June 30, 2025; Katrina Pielli – June 30, 2025; Christine Moon – June 30, 2026; Deborah Dickerson – June 30, 2026; Diana Duke – June 30, 2027; and Mary Wilkosz – June 30, 2027.

Items 5, 6 and 7 were removed from the Consent Calendar and placed under New Business.

8. Resolution 24-044 Idaho Gem Grant Agreement for Award to City of Sandpoint (IGG Application #006359) for Travers Skatepark Expansion Project approved
9. Resolution 24-045 Change Order No 2 to Agreement No. A23-5300-4 with Dreamland Skateparks for Travers Park Skatepark Expansion Project approved

Public Hearing

10. Public Hearing and Decision on Final Plat for Westpointe Place, four-lot subdivision in the vicinity of Ontario Street and Highway 2

    The Mayor recited the order and procedure for the public hearing and noted, for the record, that any written comments received were included in the meeting packet or otherwise provided to Council if received in time to do so.

    The Mayor and each Council member then confirmed no conflict of interest and no ex parté contact regarding this matter.*****

    Interim City Planner Daren Fluke provided an explanation of the subject of the public hearing and, along with Civil Engineer Brandon Staglund and City legal counsel Zachary Jones, fielded questions from the Council members and provided information as requested by Council.

Following the staff presentation, Darius Ruen and Tess Vogel with Ruen Yeager and Associates presented information on behalf of the applicant.

*****At 7:04 p.m., following the applicant's presentation, Mr. Jones advised and recommended that the Mayor or any City Council member who testified as a private citizen, prior to their election, during the public hearing on the Preliminary Plat for this subdivision should recuse themselves from further deliberation and from voting on this matter. Following that recommendation, Mayor Grimm and Councilors Schreiber and Duquette recused themselves and left the dais. Council President Ruehle assumed the role of presiding officer, with Councilors Dick, Aispuro and Howarth, remaining to deliberate and render a decision on this matter, along with Council President Ruehle.

The City Clerk recited a summary reminder of the rules and instructions for public testimony, and Council President Ruehle opened the public hearing. No members of the public testified on this matter, and the Council President closed the public hearing.

With no further deliberation, there was a motion as follows:

Motion that the Sandpoint City Council, after consideration of the criteria and relevant standards of Idaho Code and Sandpoint City Code, **approve** the three-lot final plat originally approved by the City Council under City application PS23-0003. The Council finds that Westpointe Plaza LLC's proposed final plat, containing one fewer lot than the four approved by the Council, complies with all conditions of approval and substantially conforms to the approved preliminary plat. Further, the City Council President is authorized to sign the plat on behalf of the City.

Motion made by Councilor Dick, Seconded by Councilor Howarth.
Voting Yea: Councilor Ruehle, Councilor Aispuro, Councilor Dick, Councilor Howarth
Voting Abstaining: Councilor Schreiber, Councilor Duquette

Following the conclusion of the public hearing and vote on Item 10, Mayor Grimm and Councilors Schreiber and Duquette returned to the dais at 7:09 p.m.

Old/Unfinished Business - none

New Business

11. Proposed Ordinance and Summary: Sign Code / Exempted Signs

    Community Planning and Development Director Jason Welker provided a presentation on the proposed amendment to a portion of the City's sign code, City Code 9-6-15 "Exempted Signs", that would allow for off-premise signs, which may contain letters or numbers, for the purpose of sponsoring public art, parks amenities, or recreational activities/programs at City facilities.

    Following the staff presentation, questions from Council fielded by Mr. Welker and Mr. Jones, and Council discussion, the Mayor and Councilors indicated a desire for further legal review as to standards and other factors related to any possible amendments to the Sign Code, along with review and recommendation by the Planning and Zoning Commission prior to Council consideration.

    Motion to postpone further consideration of the ordinance and a decision on this matter.

    Motion made by Councilor Ruehle, Seconded by Councilor Aispuro.
    Voting Yea: Councilor Ruehle, Councilor Aispuro, Councilor Dick, Councilor Schreiber, Councilor Duquette, Councilor Howarth

5. Resolution 24-041 Change Order No. 1 to SCADA Upgrades Professional Services Agreement with B & E Electric, Inc. (City Agreement A24-3401) approved

    REMOVED FROM THE CONSENT CALENDAR – PLACED UNDER NEW BUSINESS

6. Resolution 24-042 Fifth Amendment to Professional Services Agreement with Logan Simpson Design, Inc., for Sandpoint Comprehensive Plan Update (City Agreement 109-440) approved

   REMOVED FROM THE CONSENT CALENDAR – PLACED UNDER NEW BUSINESS

7. Resolution 24-043 First Amendment to Agreement with Jacobs Engineering Group, Inc. (City Agreement A24-1910-2) approved

   REMOVED FROM THE CONSENT CALENDAR - PLACED UNDER NEW BUSINESS

   Following questions posed by Councilor Howarth, fielded by Central Services Director Cheryl Hughes, Mr. Welker, and Mayor Grimm, there was a motion to approve all three of the items listed above - agenda items 5, 6, and 7 - that had been removed from the Consent Calendar by Councilor Howarth: Resolution for Change Order No. 1 to SCADA Upgrades Professional Services Agreement with B & E Electric, Inc. (City Agreement A24-3401); Resolution for the Fifth Amendment to Professional Services Agreement with Logan Simpson Design, Inc., for Sandpoint Comprehensive Plan Update (City Agreement 109-440); and Resolution for First Amendment to Agreement with Jacobs Engineering Group, Inc. (City Agreement A24-1910-2).

   Motion made by Councilor Dick, Seconded by Councilor Ruehle.
   Voting Yea: Councilor Ruehle, Councilor Aispuro, Councilor Dick, Councilor Schreiber, Councilor Duquette, Councilor Howarth

Adjourn

With no further business on the agenda, the meeting was adjourned at 7:42 p.m.

We presided over this meeting and can confirm that these minutes, prepared by the City Clerk, were approved by the Sandpoint City Council on _____.

_____
Jeremy Grimm, Mayor

Attest: _____
Melissa Ward, City Clerk

_____
Deb Ruehle, City Council President

CITY OF SANDPOINT INVOICE REGISTER
PAYABLE DATES OF: 06/21/2024 THROUGH 07/03/2024

Vendor Name	Invoice Number	Invoice Description / Service Area Description	GL Number Description	Line Item Amount	Invoice Amount
Vendor: ACCURATE TESTING LABS LLC					
	138943	WTP: BACTERIA TEST - NORTH			$150.00
		WATER TREATMENT	TECH SERVICES - LABORATORY	$150.00	
	139108	WTP: TTL SUSPENDED SOLIDS -SC			$45.00
		WATER TREATMENT	TECH SERVICES - LABORATORY	$45.00	
			Total For: ACCURATE TESTING LABS LLC		**$195.00**
Vendor: ADAM SKOOG					
	T0029-PER DIEM	T0029-PER DIEM-ISAC ANNUAL MEETING 06/23-06/26 ADAM SKOOG			$314.50
		INFORMATION TECHNOLOGY DIVISION	TRAINING AND TRAVEL	$314.50	
	T0029-MILEAGE	T0029-MILEAGE-ISAC ANNUAL MEETING 06/22/24-06/27/24-ADAM SKOOG			$104.25
		INFORMATION TECHNOLOGY DIVISION	TRAINING AND TRAVEL	$104.25	
			Total For: ADAM SKOOG		**$418.75**
Vendor: Alaska Air					
	T0034-0272372024484	T0034-FLIGHT-COMM HEALTH GRANT ACADEMY 2024-JEREMY GRIMM			$436.21
		MAYOR'S OFFICE	TRAINING AND TRAVEL	$436.21	
			Total For: Alaska Air		**$436.21**
Vendor: ALPINE MOTORS COMPANY INC					
	158801	LUBE, OIL & FILTER - PATROL			$50.35
		POLICE DEPARTMENT	SERVICES - AUTOMOTIVE - R&M	$50.35	
			Total For: ALPINE MOTORS COMPANY INC		**$50.35**
Vendor: Amzn Mktp Us					
	111-8467451-7097012	CASE OF TENNIS BALLS, 4) TENNIS RACKETS - YOUTH TENNIS LESSONS			$285.95
		RECREATION PROGRAMS	OPERATIONAL SUPPLIES/EQUIPMENT	$285.95	
	113-4159843-1102660	10PK 17X13" BLNK YRD SGN - REC PROGRAMS			$37.10
		RECREATION PROGRAMS	OPERATIONAL SUPPLIES/EQUIPMENT	$37.10	
			Total For: Amzn Mktp Us		**$323.05**
Vendor: ARROW CONSTRUCTION HOLDINGS, LLC					
	402620	ST: 7) HIGH VISIBILITY SAFETY VESTS			$75.07
		STREET MAINTENANCE	SAFETY/PPE/MEDICAL SUPPLIES/EQUIPME	$75.07	
	403743	ST: 5 GAL SEALANT TACK REMOVER			$95.43
		STREET MAINTENANCE	ROADWAY/PATH SUPPLIES/EQUIPMENT	$95.43	
			Total For: ARROW CONSTRUCTION HOLDINGS, LLC		**$1**
Vendor: AUTO HAUS INC					

Vendor Name	Invoice Number	Invoice Description / Service Area Description	GL Number Description	Line Item Amount	Invoice Amount
	4604	SHOP: HI-TEMP THREAD SEALANT			$16.99
		WATER DISTRIBUTION	VEHICLE & MACH SUPPLIES/PARTS	$5.66	
			Total For: AUTO HAUS INC		**$16.99**
Vendor: BONNER COUNTY DAILY BEE					
	0000023145-05222024	BCB#6126 ORD AMEND CITY CODE TITLE 2 CH 9 ADA			$60.82
		CITY CLERK'S OFFICE	ADVERTISING	$60.82	
			Total For: BONNER COUNTY DAILY BEE		**$60.82**
Vendor: BOUNDARY TRACTOR YAMAHA					
	BTC-2097690	KUBOTA TRACTOR STARTER - ALL PARKS			$407.00
		PARK MAINTENANCE & CAPITAL	VEHICLE & MACH SUPPLIES/PARTS	$407.00	
	BTC-2096699	SWITCH FOR ZERO TURN MOWER - ROW			$42.51
		PARK MAINTENANCE & CAPITAL	OPERATIONAL SUPPLIES/EQUIPMENT	$42.51	
	BTC-2096428	KIT SEALS - KUBOTA TRACTOR - ALL PARKS			$226.00
		PARK MAINTENANCE & CAPITAL	VEHICLE & MACH SUPPLIES/PARTS	$226.00	
			Total For: BOUNDARY TRACTOR YAMAHA		**$675.51**
Vendor: BROWN'S NORTHSIDE					
	S160414	ST: BALL VALVE - SNOW BLOWER			$50.00
		STREET MAINTENANCE	VEHICLE & MACH SUPPLIES/PARTS	$50.00	
	S160504	SC: AUTOMOTIVE LUBRICANT FILTER - FORD F250			$9.60
		WASTEWATER COLLECTIONS	VEHICLE & MACH SUPPLIES/PARTS	$9.60	
	S160593	GASKET, AFM DEVICE - 1141			$25.05
		FIRE DEPARTMENT - SANDPOINT	VEHICLE & MACH SUPPLIES/PARTS	$25.05	
			Total For: BROWN'S NORTHSIDE		**$84.65**
Vendor: CANON FINANCIAL SERVICES INC					
	32979471	UPSTAIRS/DOWNSTAIRS COPIERS - 5840I & 5550I			$469.77
		CENTRAL SERVICES DEPARTMENT	COPIER LEASE	$355.00	
			Total For: CANON FINANCIAL SERVICES INC		**$469.77**
Vendor: CIMLINE, INC					
	195678	ST: CRACK SEALER FOR STREET REPAIRS			$72,849.00
		STREET MAINTENANCE	CAPITAL EQUIPMENT & MACHINERY	$70,749.00	
			Total For: CIMLINE, INC		**$72,849.00**
Vendor: Comfort Suites Kennewick					
	T0031-66245837	T0031-LODGING WHILE ATTENDING TASER TRAINING			$129.38
		POLICE DEPARTMENT	TRAINING AND TRAVEL	$129.38	
			Total For: Comfort Suites Kennewick		**$129.38**
Vendor: CONSOLIDATED SUPPLY CO.					
	S011956510.001	WD: BALL VLV, CPLNGS, CURB BOX RPAIR LID			$549.00
		WATER DISTRIBUTION	OPERATIONAL SUPPLIES/EQUIPMENT	$549.00	

Vendor Name	Invoice Number	Invoice Description / Service Area Description	GL Number Description	Line Item Amount	Invoice Amount
	S011945127.001	4)TIMER, 2)EXP MODULE, 30)SPRY BUBBLR, 30)360 DEG BUBBLR - IRRIGATION - A			$475.09
		PARK MAINTENANCE & CAPITAL	IRRIGATION SUPPLIES	$475.09	
	S011930517.002	6) PVC NPPL, 6) PVC NPPL 883, 6) S80 PVC NPPL, 6) PVC FXF CPLG, 6) 1" PVC FXF			$119.29
		PARK MAINTENANCE & CAPITAL	IRRIGATION SUPPLIES	$119.29	
	S011926062.001	WTRPRF TMR, 2) FLO CNTRL, MTR BX, MTR BX CVR, MTR BX EXTNSN - SCHWEITZ			$825.85
		PARK MAINTENANCE & CAPITAL	IRRIGATION SUPPLIES	$825.85	
			Total For: CONSOLIDATED SUPPLY CO.		**$1,969.23**
Vendor: CO-OP GAS & SUPPLY CO.					
	35706	ST: 2 GAL SPRAYER TANK			$36.99
		STREET MAINTENANCE	ROADWAY/PATH SUPPLIES/EQUIPMENT	$36.99	
	43359	BACKPACK SPRAYER, HEARING PRTCTR - TOOLS - ALL PARKS			$171.98
		PARK MAINTENANCE & CAPITAL	OPERATIONAL SUPPLIES/EQUIPMENT	$171.98	
	70294	2) HYDRANT FROST FREE, MOUSE TRAP - SPORTS COMP - BIKE SKILLS CRS			$188.97
		PARK MAINTENANCE & CAPITAL	OPERATIONAL SUPPLIES/EQUIPMENT	$188.97	
	79483	50) MARKING CHALK - SPORTS COMP			$849.50
		PARK MAINTENANCE & CAPITAL	OPERATIONAL SUPPLIES/EQUIPMENT	$849.50	
	35101	ST: SNW BLWR GALV PIPE BRUSHING 1.25X1"			$8.99
		STREET MAINTENANCE	VEHICLE & MACH SUPPLIES/PARTS	$8.99	
			Total For: CO-OP GAS & SUPPLY CO.		**$1,256.43**
Vendor: EDGE ANALYTICAL INC					
	AEE0045	WWTP: CHROMIUM 6 FILTERED WATER-TESTING			$732.00
		WASTEWATER TREATMENT	TECH SERVICES - LABORATORY	$732.00	
			Total For: EDGE ANALYTICAL INC		**$732.00**
Vendor: EDNETICS INC					
	129733	STD/ANALOG USERS VOIP-MAY '24			$2,931.75
		INFORMATION TECHNOLOGY DIVISION	TELEPHONE - VOIP	$2,931.75	
			Total For: EDNETICS INC		**$2,931.75**
Vendor: ENVIRO-CLEAN EQUIPMENT					
	24-63121	WD: REPAIR ELBOW - VAC TRUCK			$5,357.41
		WATER DISTRIBUTION	VEHICLE & MACH SUPPLIES/PARTS	$5,357.41	
			Total For: ENVIRO-CLEAN EQUIPMENT		**$5,357.41**
Vendor: Event Tickets Purchase					
	PR97942613	NOMINATION APP FEE-ORCHIDS & ONIONS 2024			$53.50
		COMMUNITY DEVELOPMENT ADMINISTR	OPERATIONAL SUPPLIES/EQUIPMENT	$53.50	
			Total For: Event Tickets Purchase		**$53.50**
Vendor: FATBEAM LLC					
	45582	INTERNET SVCS - CITY HALL - JULY '24			$406.85
		INFORMATION TECHNOLOGY DIVISION	INTERNET - FIBER/T1	$406.85	
			Total For: FATBEAM LLC		**$4**

Vendor Name	Invoice Number	Invoice Description / Service Area Description	GL Number Description	Line Item Amount	Invoice Amount
Vendor: FORTE					
	0012113417	CREDIT CARD TRANSACTION FEES - MAY'24			$697.59
		PARK MAINTENANCE & CAPITAL	CREDIT CARD SERVICE	$5.13	
			Total For: FORTE		**$697.59**
Vendor: GAMETIME					
	PJI-0239989	RVR RCK CLMBR RPLCMNT OPT 1A, TOOL KIT, ARSL PAINT - PINE ST PLAYGROU			$1,884.39
		PARK MAINTENANCE & CAPITAL	OPERATIONAL SUPPLIES/EQUIPMENT	$1,884.39	
			Total For: GAMETIME		**$1,884.39**
Vendor: GENERAL FIRE APPARATUS INC					
	18841	VALVE VICKERS EATON - 1141			$323.56
		FIRE DEPARTMENT - SANDPOINT	VEHICLE & MACH SUPPLIES/PARTS	$323.56	
			Total For: GENERAL FIRE APPARATUS INC		**$323.56**
Vendor: GRANICUS SAAS					
	181519	GRANICUS WEBSITE SERVICES EXT 03/15/24 THRU 03/14/25			$4,345.47
		INFORMATION TECHNOLOGY DIVISION	SOFTWARE/SAAS - WEB/CODIFICATION/AG	$4,345.47	
			Total For: GRANICUS SAAS		**$4,345.47**
Vendor: HMH ENGINEERING					
	M23013-02	FLOODPLAIN REVIEW SVCS THRU 5/19/24			$4,365.00
		STREET CAPITAL & PROJECTS	OTHER PROF SERVICE - ENGINEERING/AR	$875.00	
	M24005-02	CEDAR ST RECONSTRUCTION SVCS THRU 5/19/24			$7,473.89
		STREET CAPITAL & PROJECTS	OTHER PROF SERVICE - ENGINEERING/AR	$6,203.33	
			Total For: HMH ENGINEERING		**$11,838.89**
Vendor: IDAHO DEPT OF WATER RESOURCES					
	060424-APPLICATION	APPLICATION FEE - BRIDGE REHAB			$20.00
		STREET CAPITAL & PROJECTS	OTHER PROF SERVICE - ENGINEERING/AR	$20.00	
			Total For: IDAHO DEPT OF WATER RESOURCES		**$20.00**
Vendor: INTERSTATE CONCRETE & ASPHALT					
	971888	WD: HOT ASPHALT			$430.11
		WATER DISTRIBUTION	ROADWAY/PATH SUPPLIES/EQUIPMENT	$430.11	
			Total For: INTERSTATE CONCRETE & ASPHALT		**$430.11**
Vendor: JAMES A SEWELL & ASSOC LLC					
	110351	RUTH & BOYER ALLEY SWR MAIN RPLCMNT THRU 5/31/24			$7,242.40
		WASTEWATER CAPITAL PROJECTS	CAPITAL IMPROVEMENTS OTHER THAN BU	$7,242.40	
			Total For: JAMES A SEWELL & ASSOC LLC		**$7,242.40**
Vendor: JARED RYAN SUNDBERG					
	1619	ST: MECHANICAL REPAIR SNOWBLOWER			$9,625.00
		STREET MAINTENANCE	VEHICLE & MACH SUPPLIES/PARTS	$9,625.00	

Vendor Name	Invoice Number	Invoice Description / Service Area Description	GL Number Description	Line Item Amount	Invoice Amount
			Total For: JARED RYAN SUNDBERG		**$9,625.00**
Vendor: JONATHAN GRIMM					
	T0034-PER DIEM	T0034- PER DIEM- COMM HEALTH GRANT ACAD- JEREMY GRIMM			$74.00
		MAYOR'S OFFICE	TRAINING AND TRAVEL	$74.00	
	T0034- MILEAGE	T0034-MILEAGE-COMM HEALTH GRANT ACAD-JEREMY GRIMM			$104.25
		MAYOR'S OFFICE	TRAINING AND TRAVEL	$104.25	
	T0034-TRANSPORTATION	T0034-UBER-COMM HEALTH GRANT ACAD-JEREMY GRIMM			$16.22
		MAYOR'S OFFICE	TRAINING AND TRAVEL	$16.22	
			Total For: JONATHAN GRIMM		**$194.47**
Vendor: J-U-B ENGINEERS INC					
	0174021	PILOT CHIP SEAL PROGRAM - 04/28/24 THRU 06/01/24			$8,818.19
		STREET CAPITAL & PROJECTS	OTHER PROF SERVICE - ENGINEERING/AR	$8,818.19	
	0174116	WWTP:FCLTY BNDSCRN SVCS 04/28/24 THRU 06/01/24			$3,684.30
		WASTEWATER CAPITAL PROJECTS	CAPITAL EQUIPMENT & MACHINERY	$3,684.30	
	0173882	MANHOLE REHAB - DESIGN SRVCS - 4/28/24 THRU 6/1/24			$5,070.00
		WASTEWATER CAPITAL PROJECTS	CAPITAL IMPROVEMENTS OTHER THAN BU	$5,070.00	
			Total For: J-U-B ENGINEERS INC		**$17,572.49**
Vendor: KELLER ASSOCIATES INC					
	0241717	LFT STATION RPLCMNT 5/5/24-6/1/24			$18,757.35
		WASTEWATER CAPITAL PROJECTS	CAPITAL IMPROVEMENTS OTHER THAN BU	$9,378.67	
			Total For: KELLER ASSOCIATES INC		**$18,757.35**
Vendor: LANCE BRACE					
	T0028-PER DIEM	T0028-PER DIEM-ISAC ANNUAL MEETING-06/23-06/26 LANCE BRACE			$314.50
		INFORMATION TECHNOLOGY DIVISION	TRAINING AND TRAVEL	$314.50	
	T0028-MILEAGE	T0028-MILEAGE-ISAC ANNUAL MEETING-06/22/24-06/26/24-LANCE BRACE			$104.25
		INFORMATION TECHNOLOGY DIVISION	TRAINING AND TRAVEL	$104.25	
			Total For: LANCE BRACE		**$418.75**
Vendor: Lifeloc Technologies					
	000024111	2) 250 - MOUTHPIECES FOR LIFELOC			$150.70
		POLICE DEPARTMENT	OPERATIONAL SUPPLIES/EQUIPMENT	$150.70	
			Total For: Lifeloc Technologies		**$150.70**
Vendor: MICHAEL D. TERRELL					
	5908	PLAYGROUND & SPLASHPAD DESIGN SERVICES - 05/16/24 THRU 06/15/24			$1,922.48
		PARK MAINTENANCE & CAPITAL	CAPITAL IMPROVEMENTS OTHER THAN BU	$961.24	
		PARK MAINTENANCE & CAPITAL	CAPITAL IMPROVEMENTS OTHER THAN BU	$961.24	
			Total For: MICHAEL D. TERRELL		**$1,922.48**
Vendor: MOUNTAIN DOG SIGN COMPANY INC					
	INV-11882	ADMIN/CLERK/LICENSE SIGN- FRONT DESK			$3
		CITY CLERK'S OFFICE	OFFICE SUPPLIES/EQUIPMENT	$347.31	

Vendor Name	Invoice Number	Invoice Description / Service Area Description	GL Number Description	Line Item Amount	Invoice Amount
			Total For: MOUNTAIN DOG SIGN COMPANY INC		**$347.31**
Vendor: NAPA AUTO PARTS					
	189149	WWTP: BLUE GEL THREADLOCKER ADHESIVE			$23.68
		WASTEWATER TREATMENT	OPERATIONAL SUPPLIES/EQUIPMENT	$23.68	
	186793	AIR FILTER FOR ZERO TURN - ALL PARKS			$13.71
		PARK MAINTENANCE & CAPITAL	VEHICLE & MACH SUPPLIES/PARTS	$13.71	
	189626	18MO WTY BAT, BAT CORE DEPOSIT - F-150 - ALL PARKS			$97.84
		PARK MAINTENANCE & CAPITAL	VEHICLE & MACH SUPPLIES/PARTS	$97.84	
	187145	OIL 5W20QT - RANGER			$4.79
		PARK MAINTENANCE & CAPITAL	VEHICLE & MACH SUPPLIES/PARTS	$4.79	
	187397	2) ANTIFREEZE FOR KUBOTA - ALL PARKS			$17.98
		PARK MAINTENANCE & CAPITAL	VEHICLE & MACH SUPPLIES/PARTS	$17.98	
			Total For: NAPA AUTO PARTS		**$158.00**
Vendor: NEWCO INC					
	895838	WTP: CHMCLS -CALC THIOSULFATE/NALCOLYTE			$2,454.54
		WATER TREATMENT	CHEMICAL SUPPLIES	$517.04	
	898495	WTP: SODIUM HYDROXIDE CHEMICALS			$5,331.00
		WATER TREATMENT	CHEMICAL SUPPLIES	$1,600.00	
	898523	WTP: ACH CHEMICAL - LAKE PLANT			$2,618.00
		WATER TREATMENT	CHEMICAL SUPPLIES	$2,183.00	
			Total For: NEWCO INC		**$10,403.54**
Vendor: NORTH 40 OUTFITTERS					
	045092/B	WWTP: UTILITY FABRIC/POST DRIVER/MWR BLDE			$215.43
		WASTEWATER TREATMENT	OPERATIONAL SUPPLIES/EQUIPMENT	$215.43	
	45267/B	ST: MAX-PRO GAS - HIGH HEAT SOLDERING			$12.99
		STREET MAINTENANCE	ROADWAY/PATH SUPPLIES/EQUIPMENT	$12.99	
	045054/B-C	CREDIT - TAX REFUNDED FOR BLGE PUMP PLUMBING KIT - BEACH			$(3.15)
		PARK MAINTENANCE & CAPITAL	VEHICLE & MACH SUPPLIES/PARTS	$(3.15)	
	045035/B	BILGE PUMP PLUMBING KIT (TAX REFUNDED) - BEACH BOAT			$48.14
		PARK MAINTENANCE & CAPITAL	VEHICLE & MACH SUPPLIES/PARTS	$48.14	
	45208/B	ZERO G HSE, 9 NZZL, SHWR STRM NZZL, HS SHT OFF, SFTY LGHT STRB, HSE SHT			$128.94
		PARK MAINTENANCE & CAPITAL	TURF/GROUND/TREE/PLANT SUPPLIES/EQ	$128.94	
	045070/B	ST: RED LUMBER CRAYON			$5.94
		STREET MAINTENANCE	PAINT & THERMO SUPPLIES/EQUIPMENT	$5.94	
	45059/B	RUFFIES 33 GAL TRASH 100CT - CITY HALL			$18.99
		GOVERNMENT BUILDING & GROUNDS DI	OPERATIONAL SUPPLIES/EQUIPMENT	$18.99	
	045056/B	SC: 20V BTRY, 20V FLEX GIRNDER			$159.94
		WASTEWATER COLLECTIONS	TOOLS	$159.94	
			Total For: NORTH 40 OUTFITTERS		**$587.22**
Vendor: NORTHERN STATES INC					
	107101	WWTP: YARD & INTERIOR PEST CONTROL			$5

Vendor Name	Invoice Number	Invoice Description / Service Area Description	GL Number Description	Line Item Amount	Invoice Amount
		WASTEWATER TREATMENT	SERVICES - GROUNDS - R&M	$583.18	
			Total For: NORTHERN STATES INC		**$583.18**
Vendor: Onestepgpscom					
	1411353	16 - GPS DEVICE SVCS - JUN'24			$223.20
		POLICE DEPARTMENT	TECH SERVICES - PUBLIC SAFETY MISC	$223.20	
			Total For: Onestepgpscom		**$223.20**
Vendor: OXARC INC					
	0032084210	WWTP: CHLORINE & SULFUR DIOXIDE			$7,189.38
		WASTEWATER TREATMENT	CHEMICAL SUPPLIES	$7,189.38	
	0032100213	WWTP: CHLORINE & SO2 -JUNE			$7,502.34
		WASTEWATER TREATMENT	CHEMICAL SUPPLIES	$7,502.34	
	0032097496	WD: POLARIZED SUNGLASSES - WES ALBIN			$34.69
		WATER DISTRIBUTION	SAFETY/PPE/MEDICAL SUPPLIES/EQUIPME	$34.69	
	0061741382	WWTP: SPECIALTY GASES			$171.92
		WASTEWATER TREATMENT	CHEMICAL SUPPLIES	$171.92	
	0032102521	ST: FACE SHIELD/WELDING SLEEVES			$154.97
		STREET MAINTENANCE	ROADWAY/PATH SUPPLIES/EQUIPMENT	$154.97	
			Total For: OXARC INC		**$15,053.30**
Vendor: PAC WEST PARTS					
	55509	DRIVE SHAFT - ZERO TURN MOWER - SPORTS CMPLX			$49.98
		PARK MAINTENANCE & CAPITAL	VEHICLE & MACH SUPPLIES/PARTS	$49.98	
			Total For: PAC WEST PARTS		**$49.98**
Vendor: PANHANDLE SEEP					
	1273	ST/WD: SEEP RECERT CLASS-X3			$450.00
		WATER DISTRIBUTION	TRAINING AND TRAVEL	$150.00	
			Total For: PANHANDLE SEEP		**$450.00**
Vendor: PASSWORD ANSWER SERVICE INC					
	10252715	AFTER HOURS ANSWER SERVICES JUN'24			$301.86
		PUBLIC WORKS ADMINISTRATION	TELEPHONE - LANDLINE & OTHER	$301.86	
			Total For: PASSWORD ANSWER SERVICE INC		**$301.86**
Vendor: PEAK SAND & GRAVEL INC					
	99031	1.60 TON TOPSOIL - LAKEVIEW			$50.00
		PARK MAINTENANCE & CAPITAL	OPERATIONAL SUPPLIES/EQUIPMENT	$50.00	
			Total For: PEAK SAND & GRAVEL INC		**$50.00**
Vendor: PONDERAY NURSERY AND GARDEN					
	271	4.0 CU YD SHREDDED BARK-ROW PLANTER BOXES-REMAINDER OF INVOICE 0516			$175.10
		STREET MAINTENANCE	TURF/GROUND/TREE/PLANT SUPPLIES/EQ	$175.10	
			Total For: PONDERAY NURSERY AND GARDEN		**$1**

Vendor Name	Invoice Number	Invoice Description / Service Area Description	GL Number Description	Line Item Amount	Invoice Amount
Vendor: Ramco Engineering, Inc.					
	0283741-IN	REPLACEMENT MIRROR - 1141			$512.52
		FIRE DEPARTMENT - SANDPOINT	VEHICLE & MACH SUPPLIES/PARTS	$512.52	
			Total For: Ramco Engineering, Inc.		**$512.52**
Vendor: REFRIGERASHAWN SERVICE CO					
	11505	SLUSHIE MACH-LACK OF REFRGRNT, RSTRCTD CPLRY TBE - BEACH SNACK SHA			$120.00
		CITY BEACH CONCESSIONS	SERVICES - EQUIPMENT - R&M	$120.00	
			Total For: REFRIGERASHAWN SERVICE CO		**$120.00**
Vendor: Safeway #0350					
	564803403200	4)GRNLA BAR, 2)WTR, 2)FRUIT SNACK - CHAFE FAMILY FUN RIDE 2024			$42.79
		RECREATION PROGRAMS	OPERATIONAL SUPPLIES/EQUIPMENT	$42.79	
	00048057	BAGELS, FRUIT, YOGURT-COFFEE BREAK JUN'24			$49.68
		CENTRAL SERVICES DEPARTMENT	SUSTENANCE/FOOD	$49.68	
			Total For: Safeway #0350		**$92.47**
Vendor: SANDPOINT BUILDING SUPPLY					
	2468528	3) REBAR GRADE 60 - IRRIGATION - 5TH AVE - ALL PARKS			$30.75
		PARK MAINTENANCE & CAPITAL	IRRIGATION SUPPLIES	$30.75	
			Total For: SANDPOINT BUILDING SUPPLY		**$30.75**
Vendor: SANDPOINT SUPER DRUG					
	24792/1	LYSOL SPRY, 3) GLS CLNR - ALL PARKS			$17.78
		PARK MAINTENANCE & CAPITAL	OPERATIONAL SUPPLIES/EQUIPMENT	$17.78	
	24665/1	ST: ROLLER CVR & HOLDER -NO PKNG			$28.76
		STREET MAINTENANCE	PAINT & THERMO SUPPLIES/EQUIPMENT	$28.76	
			Total For: SANDPOINT SUPER DRUG		**$46.54**
Vendor: SELKIRK PRESS INC					
	20884	DOOR HANGERS - CROS			$130.90
		POLICE DEPARTMENT	OPERATIONAL SUPPLIES/EQUIPMENT	$130.90	
			Total For: SELKIRK PRESS INC		**$130.90**
Vendor: SHERWIN-WILLIAMS CO					
	0649-5	ST: (6) 5 GAL MESH PAINT STRAINER			$13.72
		STREET MAINTENANCE	PAINT & THERMO SUPPLIES/EQUIPMENT	$13.72	
	4545-0	ST: (4) 4 INCH PAINT ROLLERS			$20.71
		STREET MAINTENANCE	PAINT & THERMO SUPPLIES/EQUIPMENT	$20.71	
			Total For: SHERWIN-WILLIAMS CO		**$34.43**
Vendor: SMS AUTOMOTIVE & MARINE INC					
	1770	WARNING LIGHTS INSTALL-1132			$576.80
		FIRE DEPARTMENT - SANDPOINT	VEHICLE & MACH SUPPLIES/PARTS	$576.80	
			Total For: SMS AUTOMOTIVE & MARINE INC		**$5**

Vendor Name	Invoice Number	Invoice Description / Service Area Description	GL Number Description	Line Item Amount	Invoice Amount
Vendor: SOUTH FORK HARDWARE (PARKS)					
	377419	1" PVC THREADED CAP - IRRIGATION REPAIR - 5TH AVE			$1.69
		PARK MAINTENANCE & CAPITAL	IRRIGATION SUPPLIES	$1.69	
	377878	RUSTOLEUM MARKING WAND, SPRAY - ALL PARKS			$46.64
		PARK MAINTENANCE & CAPITAL	TOOLS	$46.64	
	377422	3-PVC NPPL, PRESSURE CAP - ALL PARKS			$10.16
		PARK MAINTENANCE & CAPITAL	IRRIGATION SUPPLIES	$10.16	
	377491	TIE WIRE 16GA, 8) NUTS & BOLTS - BEACH			$13.19
		PARK MAINTENANCE & CAPITAL	OPERATIONAL SUPPLIES/EQUIPMENT	$13.19	
	378009	BATTERIES, WATER SPRAY NOZZLE - IRRIGATION - ALL PARK			$32.98
		PARK MAINTENANCE & CAPITAL	IRRIGATION SUPPLIES	$32.98	
	377744	5) PVC COUP, 6) PVC NPPLS - IRRIGATION - SPORTS COMP			$20.28
		PARK MAINTENANCE & CAPITAL	IRRIGATION SUPPLIES	$20.28	
	378723	WOOD SCREWS - BEACH MARINE DOCKS			$38.99
		PARK MAINTENANCE & CAPITAL	OPERATIONAL SUPPLIES/EQUIPMENT	$38.99	
	379279	GRAF RMVL SPRAY, 2) INDUSTRL SPRY - BEACH PARKING LOT			$30.37
		PARK MAINTENANCE & CAPITAL	OPERATIONAL SUPPLIES/EQUIPMENT	$30.37	
	379076	ORG/RED SPRAY, WHT PAINT - BEACH TOOLS			$17.98
		PARK MAINTENANCE & CAPITAL	TOOLS	$17.98	
	379078	10) REFLECTIVE 911 HOUSE NBR -MARINAS			$49.90
		PARK MAINTENANCE & CAPITAL	OPERATIONAL SUPPLIES/EQUIPMENT	$49.90	
	378335	NOTEBOOK, MEASURING GLASS, MEASURING CUP - SPORTS COMP			$12.27
		PARK MAINTENANCE & CAPITAL	OPERATIONAL SUPPLIES/EQUIPMENT	$12.27	
	379084	TOILET RPR KT, KRKY FLPPR, TOIL FILL VLV, TOIL TNK LVR - LAKEVIEW RESTROO			$77.26
		PARK MAINTENANCE & CAPITAL	OPERATIONAL SUPPLIES/EQUIPMENT	$77.26	
	379146	FUSE, 12) NUTS & BOLTS - MEMORIAL - TOOLS			$17.19
		PARK MAINTENANCE & CAPITAL	TOOLS	$17.19	
			Total For: SOUTH FORK HARDWARE (PARKS)		**$368.90**
Vendor: SOUTH FORK HARDWARE (PUB WKS)					
	378414	WD: (36) METER PADLOCKS			$431.64
		WATER DISTRIBUTION	OPERATIONAL SUPPLIES/EQUIPMENT	$431.64	
	378778	WWTP: 4 YLW JACKET TRAPS/ARMR ALL CRWSH			$42.45
		WASTEWATER TREATMENT	FACILITY SUPPLIES	$42.45	
	377719	ST: NO PKNG PAINT SUPPLIES			$44.32
		STREET MAINTENANCE	PAINT & THERMO SUPPLIES/EQUIPMENT	$44.32	
	377672	WD:LAMINATED PADLOCK-FIRE HYDRANTS			$431.64
		WATER DISTRIBUTION	OPERATIONAL SUPPLIES/EQUIPMENT	$431.64	
			Total For: SOUTH FORK HARDWARE (PUB WKS)		**$950.05**
Vendor: Squeakys Window Tinting					
	040839	WINDOW TINT - '23 FORD BRONCO			$250.00
		POLICE DEPARTMENT	VEHICLE & MACH SUPPLIES/PARTS	$250.00	
			Total For: Squeakys Window Tinting		**$2**

Vendor Name	Invoice Number	Invoice Description / Service Area Description	GL Number Description	Line Item Amount	Invoice Amount
Vendor: Staples 00105726					
	65732	POCKET FILE FOLDERS - PZE PROCESS			$29.99
		PLANNING DIVISION	OFFICE SUPPLIES/EQUIPMENT	$29.99	
	50150	ST: VERTICAL BADGE ID HOLDER			$9.99
		STREET MAINTENANCE	OPERATIONAL SUPPLIES/EQUIPMENT	$9.99	
	50062	WD/SC: LAPTOP CASE			$34.39
		WATER DISTRIBUTION	OFFICE SUPPLIES/EQUIPMENT	$17.20	
			Total For: Staples 00105726		**$74.37**
Vendor: STEEL LLC					
	19862767	FAN COIL/HEAT PUMP REPLACEMENT SVCS-NISSHA MED TECH BLDG-AIRPORT			$20,500.00
		GENERAL GOVERNMENT PROJECTS	CAPITAL IMPROVEMENTS OTHER THAN BU	$20,500.00	
			Total For: STEEL LLC		**$20,500.00**
Vendor: The Home Depot #1810					
	050031/4020866	OAK DOWEL, MOULDING - BEACH MARINAS			$13.64
		PARK MAINTENANCE & CAPITAL	OPERATIONAL SUPPLIES/EQUIPMENT	$13.64	
			Total For: The Home Depot #1810		**$13.64**
Vendor: Tlo Transunion					
	5922531-202405-1	CONTRACT CHGS-APR & MAY '24- BACKGROUND CHECKS			$270.00
		POLICE DEPARTMENT	BACKGROUND CHECK SERVICES	$270.00	
			Total For: Tlo Transunion		**$270.00**
Vendor: TML CONSTRUCTION INC					
	1673	SCRN RMVL/RPLCMNT & WSHWTR PIPING-TIME&MTRLS			$34,438.00
		WASTEWATER CAPITAL PROJECTS	CAPITAL EQUIPMENT & MACHINERY	$32,500.00	
			Total For: TML CONSTRUCTION INC		**$34,438.00**
Vendor: USA BLUE BOOK					
	INV00394352	WWTP: 5 BOXES GLOVES; 1 -TITRATOR CARTRIDGE			$170.05
		WASTEWATER TREATMENT	LABORATORY SUPPLIES	$170.05	
			Total For: USA BLUE BOOK		**$170.05**
Vendor: USA SOFTBALL OF IDAHO					
	345	7 COED SOFTBALL TEAMS - COED SOFTBALL			$224.00
		RECREATION PROGRAMS	LICENSES/DUES & SUBSCR (JOB RELATED)	$224.00	
			Total For: USA SOFTBALL OF IDAHO		**$224.00**
Vendor: VERIZON WIRELESS					
	9967079510	WIRELESS PHONE/DATA CHGS 05/21/24-06/20/24			$486.37
		WATER TREATMENT	TELEPHONE - WIRELESS	$40.01	
			Total For: VERIZON WIRELESS		**$486.37**
Vendor: VESTIS GROUP, INC					
	GEG1-003908	WWTP: FIRST AID SUPPLY KIT RESTOCK			$3[illegible]

Vendor Name	Invoice Number	Invoice Description / Service Area Description	GL Number Description	Line Item Amount	Invoice Amount
		WASTEWATER TREATMENT	SAFETY/PPE/MEDICAL SUPPLIES/EQUIPME	$339.09	
	GEG1-003892	MISC MEDICAL & FIRST AID SUPPLIES - SPD MEDICINE CABINET			$248.76
		POLICE DEPARTMENT	SAFETY/PPE/MEDICAL SUPPLIES/EQUIPME	$248.76	
			Total For: VESTIS GROUP, INC		**$587.85**
Vendor: WATERFRONT PROPERTY MANAGEMENT					
	53705	FUEL FOR FIRE BOAT-JUN'24			$237.30
		FIRE DEPARTMENT - SANDPOINT	FUEL - GASOLINE/DIESEL	$237.30	
			Total For: WATERFRONT PROPERTY MANAGEMENT		**$237.30**
Vendor: WELCH COMER & ASSOCIATES INC					
	44050020-003	BRIDGE ST SIDEWALK DSGN SVCS 04/21/24-05/18/24			$1,900.00
		STREET CAPITAL & PROJECTS	OTHER PROF SERVICE - ENGINEERING/AR	$1,900.00	
			Total For: WELCH COMER & ASSOCIATES INC		**$1,900.00**
Vendor: WESTERN STATES EQUIPMENT CO					
	IN002828267	ST: SNOW BLOWER GASKET			$2.28
		STREET MAINTENANCE	VEHICLE & MACH SUPPLIES/PARTS	$2.28	
	IN002828279	ST: SNW BLWR REGULATOR TP/GASKET			$56.93
		STREET MAINTENANCE	VEHICLE & MACH SUPPLIES/PARTS	$56.93	
	IN002828276	ST: SNOWBLOWER PLUG-KIT			$58.73
		STREET MAINTENANCE	VEHICLE & MACH SUPPLIES/PARTS	$58.73	
	IN002828269	ST: (2) SNWBLWR GASKET S KIT			$93.06
		STREET MAINTENANCE	VEHICLE & MACH SUPPLIES/PARTS	$93.06	
	IN002828275	ST: SNWBLWR WTR PUMP/CORE PUMP			$565.17
		STREET MAINTENANCE	VEHICLE & MACH SUPPLIES/PARTS	$565.17	
	IN002805914	ST: SNWBLWR ENGINE WASHERS			$18.42
		STREET MAINTENANCE	VEHICLE & MACH SUPPLIES/PARTS	$18.42	
	IN002807661	ST: SNWBLWR ENGINE HARD WASHERS			$2.12
		STREET MAINTENANCE	VEHICLE & MACH SUPPLIES/PARTS	$2.12	
	IN002807659	ST: SNWBLWR ENGINE BOLTS			$334.46
		STREET MAINTENANCE	VEHICLE & MACH SUPPLIES/PARTS	$334.46	
	IN002815778	ST: SNWBLWR ENGINE ASSMBLY SEAL			$106.87
		STREET MAINTENANCE	VEHICLE & MACH SUPPLIES/PARTS	$106.87	
	IN002817227	ST: SNWBLWR ENGINE SEAL/O-RING/STUDS			$223.36
		STREET MAINTENANCE	VEHICLE & MACH SUPPLIES/PARTS	$223.36	
	IN002817216	ST: SNWBLWR ENGINE GASKETS			$678.38
		STREET MAINTENANCE	VEHICLE & MACH SUPPLIES/PARTS	$678.38	
	IN002817223	ST: SNWBLWR ENGINE FLANGE BOLTS/GASKETS			$275.58
		STREET MAINTENANCE	VEHICLE & MACH SUPPLIES/PARTS	$275.58	
	IN002814339	ST: SNWBLWR ENGINE (6) BOLTS			$26.94
		STREET MAINTENANCE	VEHICLE & MACH SUPPLIES/PARTS	$26.94	
	IN002807653	ST: BACKHOE REPLACEMENT HOSE			$57.66
		STREET MAINTENANCE	VEHICLE & MACH SUPPLIES/PARTS	$57.66	
	IN002807641	ST: BACKHOE HOSE CLAMP - BOTTOM			$12.10

Vendor Name	Invoice Number	Invoice Description / Service Area Description	GL Number Description	Line Item Amount	Invoice Amount
		STREET MAINTENANCE	VEHICLE & MACH SUPPLIES/PARTS	$12.40	
	IN002807646	ST: BACKHOE HOSE CLAMP - TOP			$12.55
		STREET MAINTENANCE	VEHICLE & MACH SUPPLIES/PARTS	$12.55	
			Total For: WESTERN STATES EQUIPMENT CO		**$2,524.91**
Vendor: WITMER PUBLIC SAFETY GROUP INC					
	INV451788-2	REMAINDER OF PAYMENT FOR WILDLAND FIRE BOOTS			$133.07
		FIRE DEPARTMENT - SANDPOINT	UNIFORM & CLOTHING	$133.07	
			Total For: WITMER PUBLIC SAFETY GROUP INC		**$133.07**
Vendor: WORKPLACE LAW GROUP PC					
	WL100010	LABOR NEGOTIATION SERVICES - APR'24			$900.00
		CENTRAL SERVICES DEPARTMENT	OTHER PROF SERVICE - HUMAN RESOURC	$900.00	
			Total For: WORKPLACE LAW GROUP PC		**$900.00**
Vendor: Yokes Fresh Market					
	064890	JUICE,YOGURT,CREAM CHEESE,DONUTS-COFFEE BREAK JUN'24			$47.89
		CENTRAL SERVICES DEPARTMENT	SUSTENANCE/FOOD	$47.89	
			Total For: Yokes Fresh Market		**$47.89**
Vendor: ZIPLY FIBER					
	5035-061324	208-265-5035 PHONE CHGS- JUN'24			$59.97
		WASTEWATER COLLECTIONS	TELEPHONE - LANDLINE & OTHER	$59.97	
	6269-062224	PHONE CHGS - 911 TRANSFER 06/22/24-07/21/24			$13.80
		POLICE DEPARTMENT	TELEPHONE - LANDLINE & OTHER	$13.80	
	6708-062224	PHONE CHGS - CITY HALL 06/22/24-07/21/24			$100.00
		INFORMATION TECHNOLOGY DIVISION	TELEPHONE - LANDLINE & OTHER	$100.00	
	0918-062224	PHONE CHGS - FISHBACK 06/22/24-07/21/24			$59.97
		WASTEWATER COLLECTIONS	TELEPHONE - LANDLINE & OTHER	$59.97	
			Total For: ZIPLY FIBER		**$233.74**

City of Sandpoint Payroll Breakdown for June 2024
Employee Benefit Compensation Report
6/1/2024 To 6/30/2024

WAGES Employer Total	DENTAL Employer Total	TAXES Employer Total	SUPPLEMENTAL Employer Total	MEDICAL Employer Total	RETIREMENT Employer Total	Employer Total
$ 634,148.82	$ 3,982.50	$ 43,966.91	$ 17,154.28	$ 95,027.62	$ 80,953.80	$ 875,233.93

Signature: _____ Date:_____

Printed Name: _____

AGENDA REPORT

City Council Meeting

TODAY'S DATE: June 26, 2024

MEETING DATE: July 03, 2024

TO: Mayor and City Council

FROM: Jason Welker, Community Planning & Development Director

SUBJECT: Agreement No. A24-1910-4 with TischlerBise, Inc for updated Development Impact Fee Study

DESCRIPTION/BACKGROUND:

The City of Sandpoint's current Development Impact Fees (DIFs) were established following the last DIF study, which was completed, and its recommended fees adopted, in 2011. DIFs are one-time payments used to construct system improvements needed to accommodate new development. An impact fee represents new growth's fair share of capital facility needs. Sandpoint current collects impact fees for all new development within the City, with different fee schedules applying within the two Urban Renewal Areas (downtown and Northern) and outside of the Urban Renewal areas. Below is the current table of maximum allowable development impact fees for areas of the City outside of the Urban Renewal Areas from the 2011 study.

Figure 2. Summary of Maximum Allowable Development Impact Fees by Land Use: Outside Urban Renewal Areas

			Parks & Recreation	Police	Fire	Transportation: Streets *	Transportation: Pathways	TOTAL Impact Fee	Total Current Fee	Increase (Decrease)
Residential		Number of Bedrooms	~~~~~~~~~~~~~~~~~~ Per Housing Unit ~~~~~~~~~~~~~~~~~~							
	Multifamily/Other	All Sizes	$2,437	$214	$550	$2,872	$358	$6,431	$3,668	$2,763
	Single Family	0-3	$2,256	$198	$509	$3,138	$332	$6,433	$3,882	$2,551
	Single Family	4+	$3,378	$297	$763	$4,219	$497	$9,154	$3,882	$5,272
	Single Family	*Avg*	*$2,510*	*$220*	*$567*	*$3,382*	*$369*	*$7,048*	*$3,882*	*$3,166*
Nonresidential			~~~~~~~~~~~~~~~~~~ Per Square Foot of Floor Area ~~~~~~~~~~~~~~~~~~							
820	Commercial / Shpg Ctr Average		n/a	$0.13	$0.94	$7.14	$0.21	$8.43	$2.34	$6.09
710	Office		n/a	$0.04	$0.32	$2.65	$0.07	$3.08	$0.90	$2.18
151	Mini-Warehouse		n/a	$0.01	$0.07	$0.60	$0.02	$0.70	$0.52	$0.18
150	Warehousing		n/a	$0.01	$0.10	$0.85	$0.02	$0.99	$0.57	$0.42
140	Manufacturing		n/a	$0.01	$0.11	$0.92	$0.03	$1.07	$0.58	$0.49
110	Light Industrial		n/a	$0.03	$0.20	$1.68	$0.05	$1.95	$0.72	$1.23

** See other fee schedules for Urban Renewal Areas*

Note from the table that all new residential development pays fees based on the type of residential structure being built (multifamily unit vs. single family), while nonresidential development pays on a per square foot basis. Furthermore, residential development pays fees for park and recreation impacts, while

nonresidential development pays proportionally more for streets. The rationale behind these varying allocations for different public services based on type of development is just one part of what will be included in a new DIF study.

A Request for Proposals was released and posted on the City's website on May 17, 2024 with a proposal deadline of June 18, 2024 for a firm to conduct a new Development Impact Fee Study. The City received one proposal and that was from TischlerBise. The proposal scope includes all consulting services for the preparation and delivery of new/updated DIF recommendations. Thie process will include meeting with City staff, presentations to City Council, and development of a final report. The City has also requested the consultant include in the report a proposal for new development impact fees to support a stormwater system, which is something the City will be required to implement in the future should our population grow beyond 10,000 (expected as early as the 2030 census).

In addition to City staff, the Development Impact Fee Committee will be included in the study's development and public engagement opportunities will be available through presentations to the DIF Committee and to City Council.

The final report with recommendations is due by February 28th, 2025.

The project schedule as presented in the contract is below:

PROJECT SCHEDULE - SANDPOINT DEVELOPMENT IMPACT FEE STUDY

Tasks	Anticipated Dates	Meetings	Meetings/Deliverables
Task 1: Project Initiation/Data Acquisition	July, 2024	1	Data Request Memorandum
Task 2: Develop Land Use Assumptions and Development Projections	July - August, 2024	1	Technical Memorandum Outlining Recommended Land Use Assumptions
Task 3: Determine Capital Facility Needs and Service Levels	July - November, 2024	2	Memoranda as Appropriate
Task 4: Evaluate Different Allocation Methodologies	November - December, 2024	1	Memoranda as Appropriate
Task 5: Prepare Capital Improvements Program (CIP) Chapter	December, 2024	0	"Storyboard" Presentation on Fee Options
Task 6: Determine Need for and Calculate Credits	January, 2025	0	Draft Capital Improvement Plan
Task 7: Conduct Funding Source and Cash Flow Analysis	January, 2025	0	Memoranda as Appropriate
Task 8: Prepare Draft/Final DIF and CIP Report	January - February, 2025	1	Draft/Final Development Impact Fee and Capital Improvement Program Report
Task 9: Meetings with Development Impact Fee Advisory Committee	January - February, 2025	2	Draft DIF and CIP Report. Presentation materials as appropriate.

STAFF RECOMMENDATION:

Staff recommends City Council approve Agreement A24-1910-4 with TischlerBise, Inc. for an updated Development Impact Fee Study in the amount of $76,790.

ACTION:

Staff requests City Council approve A24-1910-4 Agreement A24-1910-4 with TischlerBise, Inc. for an updated Development Impact Fee Study in the amount of $76,790.

WILL THERE BE ANY FINANCIAL IMPACT? Yes HAS THIS ITEM BEEN BUDGETED? Yes

ATTACHMENTS:

Proposed Resolution

Agreement A24-1910-4 Tischler Bise Inc Development Impact Fee Study

2011 Development Impact Fee Study

No: 24-
Date: July 3, 2024

RESOLUTION
OF THE CITY COUNCIL
CITY OF SANDPOINT

TITLE: PROFESSIONAL SERVICES AGREEMENT WITH TISCHLERBISE, INC., FOR DEVELOPMENT IMPACT FEE STUDY (CITY AGREEMENT NO. A24-1910-4)

WHEREAS: Development Impact Fees (DIF) are one-time payments used to construct necessary system improvements for the purpose of accommodating new development, with these fees representing a fair share of capital facility needs paid by new growth;

WHEREAS: Sandpoint currently collects fees for all new development in the City, with different fee schedules for the two Urban Renewal Areas (URAs), Downtown and Northern, and outside of these URAs, which fees were established following acceptance of the last DIF study completed in 2011;

WHEREAS: The City solicited proposals for a new Development Impact Fee Study on May 17, 2024 with a submission deadline of June 18, 2024 and received one proposal from TischlerBise, Inc in response to this solicitation providing services for the preparation and delivery of new Development Impact Fee report and recommendations with a final report to be delivered to the City;

WHEREAS: Staff recommends that the study and report also include a proposal for new development impact fees to support a stormwater system, which the City will be required to implement in the future, should our population grow beyond 10,000, which is expected as early as the 2030 census; and

WHEREAS: In addition to City staff, the City's Development Impact Fee Advisory Committee (DIFAC) will be included in the development of the study, and public engagement opportunities will be available through presentations to DIFAC and to City Council, with the final report due no later than February 28, 2025.

NOW, THEREFORE, BE IT RESOLVED THAT: The Professional Services Agreement with TischlerBise, Inc., for Development Impact Fee Study and Report (City Agreement No. A24-1910-4), a copy of which is attached hereto and made a part hereof as if fully incorporated herein, is hereby approved.

BE IT FURTHER RESOLVED THAT: As set forth in the Procurement Process and Signature Authority Policy for Goods, Services, and Construction and further outlined in the City of Sandpoint Procurement Policy, on behalf of the City, the Mayor or his designee, as applicable, is authorized to execute the agreement referenced herein.

_____
Jeremy Grimm, Mayor

ATTEST:

_____
Melissa Ward, City Clerk

DocuSign Envelope ID: E291667C-BDE6-4A5F-AB26-106E7FA7093A

AGREEMENT BETWEEN OWNER AND CONSULTANT FOR PROFESSIONAL SERVICES

THIS IS AN AGREEMENT effective as of 07/05/2024 ("Effective Date") between City of Sandpoint ("Owner") and TischlerBise, Inc. ("Consultant").

Owner's Project, of which Consultant's services under this Agreement are a part, is generally identified as follows: Development Impact Fee Study ("Project").

Consultant's services under this Agreement are generally identified as follows: Prepare a Development Impact Fee Study and Report ("Services").

Other terms used in this Agreement are defined in Article 7.

Owner and Consultant further agree as follows:

ARTICLE 1 – SERVICES OF CONSULTANT

1.01 *Scope*

A. Consultant shall provide, or cause to be provided, the services set forth herein and in Exhibit A.

ARTICLE 2 – OWNER'S RESPONSIBILITIES

2.01 *General*

A. Owner shall pay Consultant as set forth in Article 4 and Appendix 1.

B. Owner shall furnish to Consultant any existing and available studies, reports, and other information pertinent to the Consultant's performance of the Services.

C. Owner shall advise Consultant of the identity and scope of services of any independent consultants retained by Owner to perform or furnish services pertinent to the Services.

D. Owner shall arrange for safe access to and make all provisions for Consultant to enter upon public and private property as required for Consultant to perform services under the Agreement.

E. Owner shall inform Consultant in writing of any specific requirements of safety or security programs that are applicable to Consultant, as a visitor to any Site under study.

F. Owner shall examine all alternative solutions, studies, reports, sketches, proposals, and other documents presented by Consultant (including obtaining advice of an attorney,

DocuSign Envelope ID: E291667C-BDE6-4A5F-AB26-106E7FA7093A

risk manager, insurance counselor, and other advisors or consultants as Owner deems appropriate with respect to such examination) and render in writing timely decisions pertaining thereto.

G. Recognizing and acknowledging that Consultant's services and expertise do not include the following services, Owner shall provide, as required for Consultant performance of its Services:

1. Accounting, bond and financial advisory (including, if applicable, "municipal advisor" services as described in Section 975 of the Dodd-Frank Wall Street Reform and Consumer Protection Act, 2010, and the municipal advisor registration rules issued by the Securities and Exchange Commission), independent cost estimating, and insurance counseling services.

2. Legal services with regard to issues pertaining to the Project as Owner requires, or Consultant reasonably requests.

H. Owner shall give prompt written notice to Consultant whenever Owner observes or otherwise becomes aware of:

1. any development that affects the scope or time of performance of Consultant's services;

2. the presence of any Constituent of Concern at any Site; or

3. any relevant, material defect or nonconformance in Consultant's services or Owner's performance of its responsibilities under this Agreement.

ARTICLE 3 – SCHEDULE FOR RENDERING SERVICES

3.01 *Commencement*

A. Consultant is authorized to begin rendering services as of the Effective Date.

3.02 *Time for Completion*

A. Consultant shall complete its obligations no later than February 28, 2025. Specific periods of time for rendering services or specific dates by which services are to be completed are provided in Exhibit A, and are hereby agreed to be reasonable.

B. If, through no fault of Consultant, such periods of time or dates are changed, or the orderly and continuous progress of Consultant's services is impaired, or Consultant's services are delayed or suspended, then the time for completion of Consultant's services, and the rates and amounts of Consultant's compensation, shall be adjusted equitably.

DocuSign Envelope ID: E291667C-BDE6-4A5F-AB26-106E7FA7093A

ARTICLE 4 – INVOICES AND PAYMENTS

4.01 *Invoices*

A. *Preparation and Submittal of Invoices:* Consultant shall prepare invoices in accordance with its standard invoicing practices and the terms of this Article and Exhibit B, Fee Schedule. Consultant shall submit its invoices to Owner on a monthly basis. Invoices are due and payable within 30 days of receipt.

4.02 *Payments*

A. *Disputed Invoices:* If Owner disputes an invoice, either as to amount or entitlement, then Owner shall promptly advise Consultant in writing of the specific basis for doing so, may withhold only that portion so disputed, and must pay the undisputed portion subject to the terms of Paragraph 4.01.

4.03 *Payment for Basic Services (Hourly Rates Plus Reimbursable Expenses) and Additional Services*

A. Using the procedures set forth in this Article, Owner shall pay Consultant for Basic Services as follows:

1. An amount equal to the cumulative hours charged to the Basic Services by each class of Consultant's employees times standard hourly rates for each applicable billing class, plus reimbursement of expenses incurred in connection with providing the Basic Services (including but not limited to expenses in the categories listed on the reimbursable expenses schedule in Exhibit B, Fee Schedule) and Consultant's sub-consultant charges, if any.

2. Consultant's standard hourly rates and reimbursable expenses schedule are set forth in Exhibit B, Fee Schedule.

3. The total compensation for Basic Services and reimbursable expenses shall not exceed $76,790 for this Project.

B. For Additional Services, Owner shall pay Consultant an amount equal to the cumulative hours charged to providing the Additional Services by each class of Consultant's employees, times standard hourly rates for each applicable billing class; plus reimbursement of expenses incurred in connection with providing the Additional Services (including but not limited to expenses in the categories listed on the reimbursable expenses schedule in Exhibit B, Fee Schedule) and Consultant's sub-consultant charges, if any.

ARTICLE 5 – GENERAL CONSIDERATIONS

5.03 *Standards of Performance*

A. *Standard of Care:* The standard of care for all professional Consulting and related services performed or furnished by Consultant under this Agreement will be the care

DocuSign Envelope ID: E291667C-BDE6-4A5F-AB26-106E7FA7093A

and skill ordinarily used by members of the subject profession practicing under similar circumstances at the same time and in the same locality. Consultant makes no warranties, express or implied, under this Agreement or otherwise, in connection with any services performed or furnished by Consultant.

B. *Technical Accuracy:* Owner shall not be responsible for discovering deficiencies in the technical accuracy of Consultant's services. Consultant shall correct deficiencies in technical accuracy without additional compensation, unless such corrective action is directly attributable to deficiencies in Owner-furnished information.

C. *Consultants:* Consultant may retain such Consultants as Consultant deems necessary to assist in the performance or furnishing of the services, subject to reasonable, timely, and substantive objections by Owner.

D. *Reliance on Others:* Subject to the standard of care set forth in Paragraph 5.01.A, Consultant and its Consultants may use or rely upon design elements and information ordinarily or customarily furnished by others, including, but not limited to, specialty contractors, manufacturers, suppliers, and the publishers of technical standards.

E. Consultant shall not be required to sign any document, no matter by whom requested, that would result in the Consultant having to certify, guarantee, or warrant the existence of conditions whose existence the Consultant cannot ascertain. Owner agrees not to make resolution of any dispute with the Consultant or payment of any amount due to the Consultant in any way contingent upon the Consultant signing any such document.

F. Consultant shall not have any professional engineering, architectural, landscape architecture, construction management, professional land surveying, or public works construction duties under this Agreement.

G. Consultant is not required to provide and does not have any responsibility for surety bonding or insurance-related advice, recommendations, counseling, or research, or enforcement of construction insurance or surety bonding requirements.

H. Consultant's services do not include providing legal advice or representation.

I. Consultant's services do not include (1) serving as a "municipal advisor" for purposes of the registration requirements of Section 975 of the Dodd-Frank Wall Street Reform and Consumer Protection Act (2010) or the municipal advisor registration rules issued by the Securities and Exchange Commission, or (2) advising Owner, or any municipal entity or other person or entity, regarding municipal financial products or the issuance of municipal securities, including advice with respect to the structure, timing, terms, or other similar matters concerning such products or issuances.

DocuSign Envelope ID: E291667C-BDE6-4A5F-AB26-106E7FA7093A

5.04 *Use of Documents*

A. All Documents are instruments of service, and Owner shall retain an ownership and property interest therein (including the copyright and the right of reuse at the discretion of the Owner) whether or not the Services or the Project is completed.

5.05 *Electronic Transmittals*

A. Owner and Consultant may transmit, and shall accept, Project-related correspondence, Documents, text, data, drawings, information, and graphics, in electronic media or digital format, either directly, or through access to a secure Project website, in accordance with a mutually agreeable protocol.

B. If this Agreement does not establish protocols for electronic or digital transmittals, then Owner and Consultant shall jointly develop such protocols.

C. When transmitting items in electronic media or digital format, the transmitting party makes no representations as to long term compatibility, usability, or readability of the items resulting from the recipient's use of software application packages, operating systems, or computer hardware differing from those used in the drafting or transmittal of the items, or from those established in applicable transmittal protocols.

5.06 *Insurance*

A. Consultant will maintain insurance coverage for Workers' Compensation, General Liability, Professional Liability, and Automobile Liability and will provide certificates of insurance to Owner upon request with City of Sandpoint named as Additional insured.

1. Worker's Compensation: Statutory limits in accordance with the State of Idaho

2. Automobile Bodily Injury and Property Damage Liability: $1,000,000 each occurrence

3. Professional Liability: Errors and Omissions: $500,000

4. Comprehensive Commercial General Liability: $1,000,000 per occurrence/ $2,000,000 aggregate

5.07 *Termination*

A. *Termination:* The obligation to provide further services under this Agreement may be terminated:

1. For cause,

a. By either party upon 30 days' written notice in the event of substantial failure by the other party to perform in accordance with the Agreement's terms through no fault of the terminating party.

DocuSign Envelope ID: E291667C-BDE6-4A5F-AB26-106E7FA7093A

b. By Consultant:

1) upon fourteen days' written notice if Owner demands that Consultant furnish or perform services contrary to Consultant's responsibilities as a licensed professional; or

2) upon fourteen days' written notice if the Consultant's services are delayed for more than 90 days for reasons beyond Consultant's control.

c. Consultant shall have no liability to Owner on account of a termination for cause by Consultant.

2. Notwithstanding the foregoing, this Agreement will not terminate as a result of a substantial failure under Paragraph 5.05.A.1.a or 5.05.A.1.b.1 if the party receiving such notice begins, within seven days of receipt of such notice, to correct its substantial failure to perform and proceeds diligently to cure such failure within no more than 30 days of receipt of notice; provided, however, that if and to the extent such substantial failure cannot be reasonably cured within such 30 day period, and if such party has diligently attempted to cure the same and thereafter continues diligently to cure the same, then the cure period provided for herein shall extend up to, but in no case more than, 60 days after the date of receipt of the notice.

B. *Termination for Convenience:* Owner may terminate the Agreement for Owner's convenience effective upon the Consultant's receipt of written notice from Owner.

C. The terminating party under Paragraphs 5.05.A or 5.05.B may set the effective date of termination at a time up to 30 days later than otherwise provided to allow Consultant to complete tasks whose value would otherwise be lost, to prepare notes as to the status of completed and uncompleted tasks, and to assemble Project materials in orderly files.

D. In the event of any termination under Paragraph 5.05, Consultant will be entitled to invoice Owner and to receive full payment for all services performed or furnished in accordance with this Agreement and all reimbursable expenses incurred through the effective date of termination.

E. In the event of termination by Owner for convenience, or by Consultant for cause, Consultant shall be entitled, in addition to invoicing for those items identified in Paragraph 5.05.D, to invoice Owner and receive payment of a reasonable amount for services and expenses directly attributable to termination, both before and after the effective date of termination, such as reassignment of personnel, costs of terminating contracts with Consultant's Consultants, and other related close-out costs, using methods and rates for Additional Services as set forth in Article 4 and Appendix 1.

5.08 *Controlling Law*

A. This Agreement is to be governed by the State of Idaho.

DocuSign Envelope ID: E291667C-BDE6-4A5F-AB26-106E7FA7093A

5.09 *Successors, Assigns, and Beneficiaries*

A. Owner and Consultant are hereby bound and the successors, executors, administrators, and legal representatives of Owner and Consultant (and to the extent permitted by Paragraph 6.07.B the assigns of Owner and Consultant) are hereby bound to the other party to this Agreement and to the successors, executors, administrators and legal representatives (and said assigns) of such other party, in respect of all covenants, agreements, and obligations of this Agreement.

B. Neither Owner nor Consultant may assign, sublet, or transfer any rights under or interest (including, but without limitation, moneys that are due or may become due) in this Agreement without the written consent of the other, except to the extent that any assignment, subletting, or transfer is mandated or restricted by law. Unless specifically stated to the contrary in any written consent to an assignment, no assignment will release or discharge the assignor from any duty or responsibility under this Agreement.

C. Unless expressly provided otherwise in this Agreement:

1. Nothing in this Agreement shall be construed to create, impose, or give rise to any duty owed by Owner or Consultant to any Constructor, or other third-party individual or entity, or to any surety for or employee of any of them.

2. All duties and responsibilities undertaken pursuant to this Agreement will be for the sole and exclusive benefit of Owner and Consultant and not for the benefit of any other party. Any and all Documents prepared by Consultant, including but not limited to the Report to be prepared pursuant to Exhibit A, are prepared solely for the use and benefit of Owner, unless expressly agreed otherwise by Consultant.

5.10 *Dispute Resolution*

A. Owner and Consultant agree to negotiate each dispute between them in good faith during the 30 days after notice of dispute. If negotiations are unsuccessful in resolving the dispute, then the dispute shall be mediated. If mediation is unsuccessful, then the parties may exercise their rights at law.

5.11 *Environmental Condition of Site – Not Used*

5.12 *Indemnification*

A. Consultant shall indemnify and hold the Owner, its officials, officers, employees, agents and assigns, harmless from and/or against any and all claims, damages, and liabilities (including reasonable attorney's fees) that may be suffered or incurred or that arise as a result of and which are caused by Consultant wrongful acts or omissions in the performance of its duties under this Agreement. This indemnification does not apply when such claims, damages, and liabilities are the result of negligent acts, errors, omissions or fault on the part of the Owner, its officials, officers, employees, agents or assigns. Nothing contained in this indemnification provision shall waive, in any manner,

DocuSign Envelope ID: E291667C-BDE6-4A5F-AB26-106E7FA7093A

the limits of liability provided to the Owner specified in Idaho Code §6-901 through 6-929, known as the Idaho Tort Claims Act.

5.13 *Records Retention*

A. Consultant shall maintain on file in legible form, for a period of five years following completion or termination of its services, all Documents, records (including cost records), and design calculations related to Consultant's services or pertinent to Consultant's performance under this Agreement. Upon Owner's request, Consultant shall provide a copy of any such item to Owner at cost.

5.14 *Miscellaneous Provisions*

A. *Notices:* Any notice required under this Agreement will be in writing, addressed to the appropriate party at its address on the signature page and given personally, by registered or certified mail postage prepaid, or by a commercial courier service. All notices shall be effective upon the date of receipt.

B. *Survival:* All express representations, waivers, indemnifications, and limitations of liability included in this Agreement will survive its completion or termination for any reason.

C. *Severability:* Any provision or part of the Agreement held to be void or unenforceable under any Laws or Regulations shall be deemed stricken, and all remaining provisions shall continue to be valid and binding upon Owner and Consultant, which agree that the Agreement shall be reformed to replace such stricken provision or part thereof with a valid and enforceable provision that comes as close as possible to expressing the intention of the stricken provision.

D. *Waiver:* A party's non-enforcement of any provision shall not constitute a waiver of that provision, nor shall it affect the enforceability of that provision or of the remainder of this Agreement.

E. *Accrual of Claims:* To the fullest extent permitted by Laws and Regulations, all causes of action arising under this Agreement shall be deemed to have accrued, and all statutory periods of limitation shall commence no later than the date of completion of the Services.

F. This is to certify that Consultant and its agents is not owned or operated by the government of China, nor will it be owned or operated by the government of China during the duration of any and all contracts entered into.

DocuSign Envelope ID: E291667C-BDE6-4A5F-AB26-106E7FA7093A

ARTICLE 6 – DEFINITIONS

6.03 *Defined Terms*

A. Wherever used in this Agreement (including the Exhibits and Appendix) terms (including the singular and plural forms) printed with initial capital letters have the meanings indicated in the text above, in the exhibits, or in the following provisions:

1. *Additional Services*—The services to be performed for or furnished to Owner by Consultant in accordance with Part 2 of Exhibit A of this Agreement.

2. *Agreement*—This written contract for study and report professional services between Owner and Consultant, including all exhibits identified in Paragraph 8.01 and any duly executed amendments.

3. *Basic Services*—The services to be performed for or furnished to Owner by Consultant in accordance with Part 1 of Exhibit A of this Agreement.

4. *Consultants*—Individuals or entities having a contract with Consultant to furnish services with respect to this Agreement as Consultant's independent professional associates and consultants; subcontractors; or vendors.

5. *Documents*—Data, studies, reports (including the Report referred to in Exhibit A), and other deliverables, whether in printed or electronic format, provided or furnished by Consultant to Owner pursuant to this Agreement.

6. *Effective Date*—The date indicated in this Agreement on which it becomes effective, but if no such date is indicated, the date on which this Agreement is signed and delivered by the last of the parties to sign and deliver.

7. *Consultant*—The individual or entity named as such in this Agreement.

8. *Laws and Regulations; Laws or Regulations*—Any and all applicable laws, statutes, rules, regulations, ordinances, codes, and orders of any and all governmental bodies, agencies, authorities, and courts having jurisdiction.

9. *Owner*—The individual or entity with which Consultant has entered into this Agreement and for which Consultant's services are to be performed.

10. *Project*—The total undertaking to be accomplished for Owner by Consultants, contractors, and others, including planning, study, design, construction, testing, commissioning, and start-up, and of which the Services to be performed or furnished by Consultant under this Agreement are a part.

DocuSign Envelope ID: E291667C-BDE6-4A5F-AB26-106E7FA7093A

ARTICLE 7 – EXHIBITS AND SPECIAL PROVISIONS

7.03 *Exhibits Included*

A. Exhibit A, Scope of Services.

B. Exhibit B, Fee Schedule

7.04 *Total Agreement*

A. This Agreement, (together with the exhibits included above) constitutes the entire agreement between Owner and Consultant and supersedes all prior written or oral understandings. This Agreement may only be amended, supplemented, modified, or canceled by a written instrument duly executed by both parties.

7.05 *Designated Representatives*

A. With the execution of this Agreement, Consultant and Owner shall designate specific individuals to act as Consultant's and Owner's representatives with respect to the Agreement. Such an individual shall have authority to transmit instructions, receive information, and render decisions relative to the Agreement on behalf of the respective party that the individual represents.

7.06 *Consultant's Certifications*

A. Consultant certifies that it has not engaged in corrupt, fraudulent, or coercive practices in competing for or in executing the Agreement. For the purposes of this Paragraph 8.04:

1. "corrupt practice" means the offering, giving, receiving, or soliciting of anything of value likely to influence the action of a public official in the selection process or in the Agreement execution;

2. "fraudulent practice" means an intentional misrepresentation of facts made (a) to influence the selection process or the execution of the Agreement to the detriment of Owner, or (b) to deprive Owner of the benefits of free and open competition;

3. "coercive practice" means harming or threatening to harm, directly or indirectly, persons or their property to influence their participation in the selection process or affect the execution of the Agreement.

\

\

DocuSign Envelope ID: E291667C-BDE6-4A5F-AB26-106E7FA7093A

IN WITNESS WHEREOF, the parties hereto have executed this Agreement, the Effective Date of which is indicated on page 1.

Owner: CITY OF SANDPOINT

By:
Print name: Jeremy Grimm
Title: MAYOR
Date Signed:

Consultant:

By: DocuSigned by: Colin McAweeney E713E3CE4419474...
Print name: Colin McAweeney
Title: Idaho Practice Leader
Date Signed: 6/26/2024

Address for Owner's receipt of notices:
1123 Lake Street
Sandpoint, Idaho 83864

Address for Consultant's receipt of notices:
999 W Main St
Suite 100
Boise, ID 83702

Designated Representative:

Title: Community Planning and Development Director
Phone Number: 208-255-1738
E-Mail Address: jwelker@sandpointidaho.gov

Designated Representative:

Title: Idaho Practice Leader
Phone Number: 208-515-7480
E-Mail Address: colin@tischlerbise.com

DocuSign Envelope ID: E291667C-BDE6-4A5F-AB26-106E7FA7093A

Exhibit A, Scope of Services between Owner and Consultant for the Development Impact Fee Study Professional Services dated July 05, 2024.

The following scope of work provides detailed steps to ensure this project is completed successfully and meets the legal requirements for impact fees, based on the State's enabling legislation, as well as national case law.

TASK 1: PROJECT INITIATION / DATA ACQUISITION

During this task, Consultant will meet with City to establish lines of communication, review and discuss project goals and expectations related to the project, review (and revise if necessary) the project schedule, request data and documentation related to new proposed development, and discuss roles in the project. The objectives of this initial discussion are outlined below:

- Obtain and review current demographics and other land use information for the City
- Review and refine work plan and schedule
- Assess additional information needs and required staff support
- Identify and collect data and documents relevant to the analysis

Meetings: One (1) on-site visit to meet with City project staff as appropriate.

Deliverables: Data request memorandum (prepared in advance of meeting).

TASK 2: PREPARE LAND USE ASSUMPTIONS AND DEVELOPMENT PROJECTIONS

The purpose of this task is to review and understand the current demographics of the City and determine the likely development future for the City in terms of new population, housing units, employment, and nonresidential building area over the next 10-20 years. Information from the City, as well other regional/State sources may serve as the basis for preparing projections of residential and nonresidential development for consideration by staff and the Impact Fee Advisory Committee. Consultant will prepare a plan that includes projections of changes in land uses, densities, intensities, and population.

Meetings: Discussions with City will be held as part of Task 1, as well as conference calls as needed.

Deliverables: Consultant will prepare a draft Technical Memorandum discussing the recommended land use factors and projections. After review and sign-off by the City, a final memorandum will be issued, which will become part of the final Impact Fee Report and Capital Improvements Plan.

TASK 3: DETERMINE CAPITAL FACILITY NEEDS AND SERVICE LEVELS

This Task as well as Tasks 4-7 may vary somewhat depending on the methodology applied to the fire and emergency services impact fee.

Identify Facilities/Costs Eligible for Impact Fee Funding. As an essential part of the nexus analysis, Consultant will evaluate the impact of development on the need for additional facilities, by type, and identify costs eligible for impact fee funding. Elements of the analysis include:

DocuSign Envelope ID: E291667C-BDE6-4A5F-AB26-106E7FA7093A

• Review facility plans, fixed asset inventories, and other documents establishing the relationship between development and facility needs by type.

• Identify planned facilities, vehicles, equipment, and other capital components eligible for impact fee funding.

• Prepare forecast of relevant capital facility needs.

• Adjust costs as needed to reflect other funding sources.
As part of calculating the fee, the City may include the construction contract price; the cost of acquiring land, improvements, materials, and fixtures; the cost for planning, surveying, and engineering fees for services provided for and directly related to the construction system improvement; and debt service charges, if the City might use impact fees as a revenue stream to pay the principal and interest on bonds, notes or other obligations issued to finance the cost of system improvements. All of these components will be considered in developing an equitable allocation of costs.

Identify Appropriate Level of Service (LOS) Standards. Consultant will review needs analyses and level of service for each facility type. Activities related to this Task include:

• Apply defined service standards to data on future development to identify the impacts of development on facility and other capital needs. This will include discussions with staff of the existing versus adopted LOS, as appropriate.

• Ascertain and evaluate the actual demand factors (measures of impact) that generate the need for each type of facility to be addressed in the study.

• Identify actual existing service levels for each facility type. This is typically expressed in the number of demand units served.

• Define service standards to be used in the impact fee analysis.

Meetings: One (1) meeting with City to discuss capital facility needs and levels-of-service.

Deliverables: Memoranda as appropriate. Results integrated into Draft/Final Impact Fee Report.

TASK 4: EVALUATE DIFFERENT ALLOCATION METHODOLOGIES

There are three basic methodologies that can be applied in the calculation of impact fees are the plan based, incremental expansion, and cost-recovery approaches. Selection of the particular methodology for each component of the impact fee will depend on which is most beneficial for the City. In a number of cases, Consultant will prepare the impact fees using several methodologies and will discuss the trade-offs with the City. This allows the utilization of a combination of methodologies within one fee category. For instance, a plan-based approach may be appropriate for a new building while an incremental approach may be appropriate for apparatus. By testing all possible methodologies, the City is assured that the maximum supportable impact fee will be developed.

Meetings: One (1) meeting with the Advisory Committee and City to discuss issues related to allocation

DocuSign Envelope ID: E291667C-BDE6-4A5F-AB26-106E7FA7093A

methodologies and relevant policy issues.

Deliverables: "Storyboard" presentation on fee options.

TASK 5: PREPARE CAPITAL IMPROVEMENTS PROGRAM (CIP)
This task will reflect an initial CIP. The CIP will incorporate anticipated new capital facilities due to growth.

Also included, as appropriate, will be replacement/retrofit/rehabilitation needs due to existing development. The CIP will represent the best estimates of the consultant team and City on the priority, timing, cost, and method of financing.

Deliverables: See Task 8.

TASK 6: DETERMINE NEED FOR "CREDITS" TO BE APPLIED AGAINST CAPITAL COSTS
There are two types of "credits" that are included in the calculation of impact fees, each with specific, distinct characteristics. The first is a credit due to possible double payment situations. This could occur when a property owner will make future contributions toward the capital costs of a public facility covered by an impact fee. The second is a credit toward the payment of an impact fee for the required dedication of public sites and improvements provided by the developer and for which the impact fee is imposed. Both types of credits will be considered and addressed in the impact fee study.

Deliverables: Memoranda as appropriate. See Task 8.

TASK 7: CONDUCT FUNDING AND CASH FLOW ANALYSIS
In order to prepare a meaningful capital funding strategy, it is important to not only understand the gross revenues, but also the capital facility costs and any deficits. In this case, some consideration should be given to anticipated funding sources. This calculation will allow the City to better understand the various revenue sources possible and the amount that would be needed if the impact fees were discounted.

The initial cash flow analysis will indicate whether additional funds might be needed or if the funding strategy might need to be changed to have new growth pay its fair share of new capital facilities. This could also affect the total credits calculated in the previous Task. Therefore, it is likely that several iterations will be conducted to refine the cash flow analysis reflecting the capital improvement needs.

Deliverables: See Task 8.

TASK 8: PREPARE IMPACT FEE AND CAPITAL IMPROVEMENTS PLAN, PUBLIC PRESENTATIONS
Consultant will prepare a draft report for the City's review. The report will summarize the need for impact fees in the City and the relevant methodologies employed in the calculation. It will also document all assumptions and cost factors. The report will include at a minimum the following information:

- Executive summary
- A detailed description of the methodologies used during the study

DocuSign Envelope ID: E291667C-BDE6-4A5F-AB26-106E7FA7093A

- A detailed description of all level of service standards and cost factors used and accompanying rationale
- A Capital Improvements Plan for fire and emergency medical services
- A detailed schedule of all proposed fees listed by land use type and activity
- Other information which adequately explains and justifies the resulting recommended fee Schedule
- Cash flow analysis
- Implementation and administration procedures

Following the City's review of the draft report, we will make mutually agreed upon changes to the impact fee report and issues a final version.

Consultant's report will have flow diagrams clearly indicating the methodology and approach, a series of tables for each fee category showing all the data assumptions and figures, and a narrative explaining all of the data assumptions, sources, and the methodologies. The report will be a stand-alone document clearly understood by all interested parties. Because of the firm's extensive experience in calculating impact fees and preparing such reports, we have developed a succinct written product that leaves a well-understood paper trail.

Meetings: One (1) meeting to present the draft Impact Fee Study and Capital Improvements Plan.

Deliverables: Draft and Final Impact Fee Study and Capital Improvements Plan.

TASK 9: PUBLIC OUTREACH

Impact Fee Advisory Committee. Meetings with the Impact Fee Advisory Committee will allow interested parties, designated by the City, to understand assumptions and raise any questions about the technical data and approach being used in the fee update. The intent is for these discussions to be an opportunity for interested parties to understand the soundness and reasonableness of the technical methodologies, and to a certain extent, the political and/or philosophical use of fees. Consultant proposes two meetings with this group. The first meeting would be an "open house" where members of the Advisory Committee, elected and appointed officials can come to learn about impact fees in general, as well as the process going forward and the land use assumptions. Meeting 2 would focus on the presentation of the draft Impact Fee Report.

Meetings: Two (2) meetings with Advisory Committee.

Deliverables: Presentation materials for meetings.

DocuSign Envelope ID: E291667C-BDE6-4A5F-AB26-106E7FA7093A

Project Schedule

Tasks Anticipated

Dates Meetings Meetings/Deliverables

Task 1: Project Initiation/Data Acquisition July, 2024
1 Data Request Memorandum

Task 2: Develop Land Use Assumptions and Development Projections - July - August, 2024
1 Technical Memorandum Outlining
1 Recommended Land Use Assumptions

Task 3: Determine Capital Facility Needs and Service Levels - July - November, 2024
2 Memoranda as Appropriate

Task 4: Evaluate Different Allocation Methodologies - November - December, 2024
1 Memoranda as Appropriate

Task 5: Prepare Capital Improvements Program(CIP) Chapter - December, 2024
"Storyboard" Presentation on Fee Options

Task 6: Determine Need for and Calculate Credits - January, 2025
Draft Capital Improvement Plan

Task 7: Conduct Funding Source and Cash Flow Analysis - January, 2025
Memoranda as Appropriate

Task 8: Prepare Draft/Final DIF and CIP Report - January - February, 2025
1 Draft/Final Development Impact Fee and Capital Improvement Program Report

Task 9: Meetings with Development Impact Fee Advisory Committee - January - February, 2025
2 Draft DIF and CIP Report. Presentation materials as appropriate.

PROJECT SCHEDULE - SANDPOINT DEVELOPMENT IMPACT FEE STUDY

Tasks	Anticipated Dates	Meetings	Meetings/Deliverables
Task 1: Project Initiation/Data Acquisition	July, 2024	1	Data Request Memorandum
Task 2: Develop Land Use Assumptions and Development Projections	July - August, 2024	1	Technical Memorandum Outlining Recommended Land Use Assumptions
Task 3: Determine Capital Facility Needs and Service Levels	July - November, 2024	2	Memoranda as Appropriate
Task 4: Evaluate Different Allocation Methodologies	November - December, 2024	1	Memoranda as Appropriate

DocuSign Envelope ID: E291667C-BDE6-4A5F-AB26-106E7FA7093A

Task 5: Prepare Capital Improvements Program (CIP) Chapter	December, 2024	0	"Storyboard" Presentation on Fee Options
Task 6: Determine Need for and Calculate Credits	January, 2025	0	Draft Capital Improvement Plan
Task 7: Conduct Funding Source and Cash Flow Analysis	January, 2025	0	Memoranda as Appropriate
Task 8: Prepare Draft/Final DIF and CIP Report	January - February, 2025	1	Draft/Final Development Impact Fee and Capital Improvement Program Report
Task 9: Meetings with Development Impact Fee Advisory Committee	January - February, 2025	2	Draft DIF and CIP Report. Presentation materials as appropriate.

DocuSign Envelope ID: E291667C-BDE6-4A5F-AB26-106E7FA7093A

Exhibit B, Fee Schedule, for the Development Impact Fee Study Professional Services dated July 05, 2024.

The table below summarizes estimated costs for the tasks reflected in Exhibit A, Scope of Services. Consultant to provide monthly invoices according to this Fee Schedule and based on the percentage complete for each task. Consultant shall not exceed costs as outlined in this Fee Schedule without both Parties in agreement of excess costs and an Amendment is fully executed to this Agreement. Amendment is required prior to additional costs being incurred.

CITY OF SANDPOINT DEVELOPMENT IMPACT FEE STUDY

Project Team Member:	Bise	McAweeney	Gilligan	Total	
Job Title:	Principal-in-Charge	Project Manager	Project Analyst	Hours	Cost
Hourly Rate	$235	$200	$180		
Task 1: Project Initiation/Data Acquisition	0	8	4	12	$2,320
Task 2: Develop Land Use Assumptions and Development Projections	2	16	24	42	$7,990
Task 3: Determine Capital Facility Needs and Service Levels	2	72	60	134	$25,670
Task 4: Evaluate Different Allocation Methodologies	8	24	4	36	$7,400
Task 5: Prepare Capital Improvements Program (CIP) Chapter	2	16	4	22	$4,390
Task 6: Determine Need for and Calculate Credits	2	8	2	12	$2,430
Task 7: Conduct Funding Source and Cash Flow Analysis	2	8	4	14	$2,790
Task 8: Prepare Draft/Final DIF and CIP Report	8	72	16	96	$19,160
Task 9: Meetings with Development Impact Fee Advisory Committee	0	16	8	24	$4,640
TOTAL:	26	240	126	392	$76,790

Capital Improvement Plans and Development Impact Fees

City of Sandpoint, Idaho

Submitted to:

City of Sandpoint, Idaho

September 28, 2011

Prepared by:

TischlerBise
Fiscal, Economic & Planning Consultants

4701 Sangamore Road
Suite S240
Bethesda, Maryland 20816
800.424.4318
www.tischlerbise.com

TischlerBise
4701 Sangamore Road
Suite S240
Bethesda, Maryland 20816
800.424.4318

www.tischlerbise.com

September 2011

CAPITAL IMPROVEMENT PLANS AND DEVELOPMENT IMPACT FEES

City of Sandpoint, Idaho

CONTENTS

EXECUTIVE SUMMARY 1
Overview 1
Unique Requirements of the Idaho Impact Fee Act 2
Summary of Capital Improvement Plans and Impact Fees 3
Figure 1. Summary of City of Sandpoint Impact Fee Methodologies 5
Maximum Allowable Development Impact Fees By Type of Land Use 5
Figure 2. Summary of Maximum Allowable Development Impact Fees by Land Use: Outside Urban Renewal Areas 6
Credits and Geographic Area 6
Figure 3. Summary of Maximum Allowable Development Impact Fees by Land Use: Downtown Urban Renewal Area 7
Figure 4. Summary of Maximum Allowable Development Impact Fees by Land Use: Northern Urban Renewal Area 7

INTRODUCTION TO IMPACT FEES 9
Definition 9
Legal Framework 9
Required Findings 10
Methodologies and Credits 11
Generic Impact Fee Calculation 12
Figure 5. Generic Impact Fee Formula 13

CAPITAL IMPROVEMENTS PLANS 14
Demand for Infrastructure 14
Figure 6. Summary of Growth Indicators 15
Figure 7. Projected Demand or Service Units 16
Proposed Means to Meet the Demand for Public Facilities 17
Figure 8. Summary of Infrastructure Level of Service Standards 17
Capital Improvement Plans 18
Parks and Recreation 18
Figure 9. Parks and Recreation Capital Improvement Plan 19
Police 19
Figure 10. Police CIP 20
Fire 20
Figure 11. Fire CIP 21
Transportation 21
Figure 12. Transportation (Streets) Capital Improvement Plan (Capacity Improvements) 23

Figure 13. Pathways CIP *24*
Funding Sources for Capital Improvements **24**
Historical Funding 24
Figure 14. General Fund Capital Outlays for Capacity Improvements *25*
Potential Funding from Development Impact Fees 25
Figure 15. Projected Development Impact Fee Revenue *25*
PARKS AND RECREATION DEVELOPMENT IMPACT FEES **27**
Figure 16. Parks Impact Fee Methodology Chart *28*
Parks & Recreation Infrastructure Standards and Cost Factors **29**
Parks Land and Improvements 29
Figure 17. Parks Level of Service Standards and Cost Factors *30*
Recreation Facility 31
Figure 18. Indoor Recreation Facility Level of Service Standards and Cost Factors *31*
Cost for Development Impact Fee Study 31
Figure 19. Development Fee Preparation Cost (Parks Portion) *32*
Credit Evaluation **32**
Parks and Recreation Input Variables and Development Impact Fees **32**
Figure 20. Parks and Recreation Input Variables and Maximum Allowable Impact Fees by Type and Size of Housing Unit *33*
Service Area **33**
Cash Flow Projections **33**
Figure 21. Cash Flow Summary for Parks *34*
POLICE DEVELOPMENT IMPACT FEES **35**
Figure 22. Police Fee Methodology Chart *36*
Cost Allocation for Police Infrastructure **37**
Figure 23. City of Sandpoint Police Proportionate Share Factors *37*
Figure 24. City of Sandpoint Police Cost Allocation and Levels of Service *38*
Police Infrastructure Standards and Levels of Service **38**
Figure 25. Police Station Level of Service Standard and Cost Factors *38*
Communications Infrastructure 39
Figure 26. Police Communications Infrastructure Level of Service Standards and Cost Factors *39*
Cost for Development Impact Fee Study 39
Figure 27. Development Fee Preparation Cost (Police Portion) *40*
Credit Evaluation **40**
Police Input Variables and Development Impact Fees **40**
Figure 28. Police Input Variables and Maximum Allowable Impact Fees by Land Use *42*
Service Area **43**
Cash Flow Projections **43**
Figure 29. Cash Flow Summary for Police *43*
FIRE DEVELOPMENT IMPACT FEES **44**
Figure 30. Fire Fee Methodology Chart *45*
Cost Allocation for Fire Infrastructure **45**
Figure 31. City of Sandpoint Fire Proportionate Share Factors *46*

Fire Infrastructure Standards and Levels of Service 46
Figure 32. Fire Station Level of Service Standards and Cost Factors 47
Apparatus and Major Equipment 47
Figure 33. Fire Apparatus Level of Service Standards and Cost Factors 48
Cost for Development Impact Fee Study 48
Figure 34. Development Fee Preparation Cost (Fire Portion) 48
Credit Evaluation 49
Fire Input Variables and Development Impact Fees 49
Figure 35. Fire Input Variables and Maximum Allowable Impact Fees by Land Use 51
Service Area 52
Cash Flow Projections 52
Figure 36. Cash Flow Summary for Fire 52

TRANSPORTATION DEVELOPMENT IMPACT FEES 53
Introduction 53
Functional Classification 54
Figure 37. Current System Level (Arterials and Collectors) Lane Miles in the City of Sandpoint 54
Overview of the City of Sandpoint Transportation Impact Fees 55
Figure 38. Transportation Impact Fee Methodology Chart 55
Projected Need for Road Capacity Improvements 56
Trip Generation 56
Figure 39. Adjustment for Journey-to Work Commuting 57
Figure 40. Commercial/Shopping Center Trip Rates and Pass-By Adjustments 58
Figure 41. Average Weekday Vehicle Trip Ends by Housing Type in City of Sandpoint 59
Figure 42. Average Persons and Trip Ends by Bedroom Range in City of Sandpoint 60
Vehicle Miles of Travel 60
Lane Capacity 60
Average Trip Length on Road System 61
Trip Length Weighting Factor by Type of Land Use 61
Development Prototypes 61
Figure 43. Road Impact Fee Input Variables 62
Travel Demand in the City of Sandpoint 62
Figure 44. Travel Demand Calibration for Road Impact Fees 63
Cost of Growth-Related Improvements 63
Figure 45. Cost Per VMT of Capacity Road Improvements 65
Cost for Impact Fee Study 66
Figure 46. Development Fee Preparation Cost (Streets Portion) 66
Credit Evaluation 66
Impact Fee Service Area 67
Transportation Input Variables and Development Impact Fees 67
Figure 47. Transportation (Streets) Input Variables and Maximum Allowable Impact Fees by Type of Land Use: Outside URAs 68
Impact Fees within Sandpoint's Urban Renewal Areas 68
Credits 68
Figure 48. Urban Renewal Areas Growth Share Calculation 69

Figure 49. Revenue Credit: Downtown Urban Renewal Area *70*
Figure 50. Revenue Credit: Northern Urban Renewal Area *71*
Impact Fees in the URAs 71
Figure 51. Transportation (Streets) Input Variables and Maximum Allowable Impact Fees by Type of Land Use: Downtown URA *72*
Figure 52. Transportation (Streets) Input Variables and Maximum Allowable Impact Fees by Type of Land Use: Northern URA *72*
Cash Flow Projections **73**
Figure 53. Cash Flow Summary for Transportation (Streets) *74*

TRANSPORTATION: MULTI-USE PATHWAYS **75**
Figure 54. Multi-use Pathway Fee Methodology Chart *76*
Cost Allocation for Multi-use Pathways Infrastructure **77**
Figure 55. Proportionate Share Calculation *77*
Multi-use Pathways Infrastructure Standards and Levels of Service **77**
Figure 56. City of Sandpoint Multi-use Pathway Inventory and Cost Estimate *78*
Cost for Development Impact Fee Study 78
Figure 57. Development Fee Preparation Cost (Pathways Portion) *78*
Credit Evaluation **79**
Pathways Input Variables and Development Impact Fees **79**
Figure 58. Multi-use Pathways Input Variables and Maximum Allowable Impact Fees by Land Use *81*
Service Area **82**
Cash Flow Projections **82**
Figure 59. Cash Flow Summary for Pathways *83*

PROPORTIONATE SHARE ANALYSIS **84**

IMPLEMENTATION AND ADMINISTRATION **86**
Nonresidential Development Categories **88**

APPENDIX: LAND USE ASSUMPTIONS & DEMOGRAPHICS **A-1**

TischlerBise
Fiscal, Economic & Planning Consultants

4701 SANGAMORE ROAD I SUITE S240 I BETHESDA, M
T: 800.424.4318 I F: 301.320.4860

80 ANNANDALE ROAD I PASADENA, CA 91105-1404
T: 818.790.6170 I F: 818.790.6235

WWW.TISCHLERBISE.COM

EXECUTIVE SUMMARY

OVERVIEW

TischlerBise was retained by the City of Sandpoint, Idaho, to analyze potential impact fee funding to meet the demands for public facilities generated by new development in the City. Capital improvements due to growth were identified for four types of public capital improvements: (1) Parks and Recreation, (2) Police, (3) Fire, and (3) Transportation. TischlerBise is also calculating development impact fees for road improvements in the City's Area of City Impact (ACI), which will need to be implemented by Bonner County.

TischlerBise has calculated impact fees for each category of capital improvements. Methodologies and calculations are presented in this report as supporting documentation for updating the current impact fees in Sandpoint.

The purpose of this study is to meet the requirements of the Idaho Development Impact Fee Act. Consistent with this enabling legislation, it is the intent of the City of Sandpoint to:

1. Ensure that adequate public facilities are available to serve new growth and development; and

2. Promote orderly growth and development by establishing uniform standards by which the City may require a payment of money imposed as a condition of development approval to pay for a proportionate share of the cost of system improvements needed to serve development.

Impact fees are one-time payments used to construct system improvements needed to accommodate new development. An impact fee represents new growth's fair share of capital facility needs. By law, impact fees can only be used for *capital* improvements, not operating or maintenance costs. Impact fees are subject to legal standards, which require fulfillment of three key elements: ***need, benefit and proportionality***.

- First, to justify a fee for public facilities, it must be demonstrated that new development will create a **need** for capital improvements.

- Second, new development must derive a **benefit** from the payment of the fees (i.e., in the form of public facilities constructed within a reasonable timeframe).

- Third, the fee paid by a particular type of development should not exceed its **proportional** share of the capital cost for system improvements.

TischlerBise documented appropriate demand indicators by type of development for the capital improvement plans and fees. Specific capital costs have been identified using local data and costs. This report includes summary tables indicating the specific factors used to derive the impact fees. These factors are referred to as level of service standards. The geographic area for the CIPs and implementation of the fees is the City of Sandpoint for all categories.

UNIQUE REQUIREMENTS OF THE IDAHO IMPACT FEE ACT

All requirements of the Idaho Development Impact Fee Act have been met in the supporting documentation prepared by TischlerBise. There are four requirements of the Idaho Act that are not common in the impact fee enabling legislation of other states. This overview offers further clarification of these unique requirements.

First, as specified in 67-8204(2) of the Idaho Act, "development impact fees shall be calculated on the basis of levels of service for public facilities . . . applicable to existing development as well as new growth and development."

Second, Idaho requires a Capital Improvements Plan (CIP) [see 67-8208]. The CIP requirements are summarized in this report, with detailed documentation provided in the discussion on infrastructure.

Third, the Idaho Act also requires documentation of any existing deficiencies in the types of infrastructure to be funded by impact fees [see 67-8208(1)(a)]. The intent of this requirement is to prevent charging new development to cure existing deficiencies. In the context of impact fees for the City of Sandpoint, the term "deficiencies" means a shortage or inadequacy of current system improvements when measured against the levels of service to be applied to new development. It does not mean a shortage or inadequacy when measured against some "hoped for" level of service.

TischlerBise used the current infrastructure cost per service unit (i.e., existing standards), or future levels of service where appropriate, multiplied by the projected increase in service units over an

appropriate planning timeframe, to yield the cost of growth-related system improvements. The relationship between these three variables can be reduced to a mathematical formula, expressed as A x B = C. In section 67-8204(16), the Idaho Act simply reorganizes this formula, stating the cost per service unit (i.e., impact fee) may not exceed the cost of growth-related system improvements divided by the number of projected service units attributable to new development (i.e., A = C ÷ B). By using existing infrastructure standards to determine the need for growth-related capital improvements, the City of Sandpoint ensures the same level-of-service standards are applicable to existing and new development. Using existing infrastructure standards also means there are no existing deficiencies in the current system that must be corrected from non-impact fee funding.

Fourth, Idaho requires a proportionate share determination [see 67-8207]. Basically local government must consider various types of applicable credits and/or other revenues that may reduce the capital costs attributable to new development. The impact fee methodologies and the cash flow analysis have addressed the need for credits to avoid potential double payment for growth-related infrastructure.

SUMMARY OF CAPITAL IMPROVEMENT PLANS AND IMPACT FEES

The impact fees calculated for the City of Sandpoint represent the highest amount feasible for each type of applicable land use, or *maximum allowable* amounts, which represents new growth's fair share of the cost for the appropriate capital facilities. The City may adopt fees that are less than the amounts shown. However, a reduction in impact fee revenue will necessitate an increase in other revenues, a decrease in planned capital expenditures, and/or a decrease in levels of service.

The **Parks and Recreation** impact fee is based on the Parks and Recreation capital improvement plan, which is derived from the City of Sandpoint's *adopted* level of service for Park facilities, which is lower than current levels of service, and the current level of service for City Recreation Facility space. Components include both land and improvements, and the fee is only calculated for residential development. Based on infrastructure needs for Park land and improvements, Indoor Recreation Facility space, and average household size by type of unit in Sandpoint, the maximum allowable Parks and Recreation impact fee for an average-size single family detached unit is $2,510 and $2,437 for multifamily/other unit. Also provided is Park impact fees by size of single family unit (by bedroom count). This allows for a more "progressive" schedule where smaller units with fewer persons per unit would be assessed a lower fee than larger units with more occupants. (See Figure 2.)

The **Police** impact fee is based on Police facilities and communications infrastructure serving the City of Sandpoint. Police impact fees are calculated for both residential and nonresidential development using proportionate share factors to allocate capital costs to residential or nonresidential land uses.

Police impact fees are based on an incremental approach using current levels of service for police facility space serving the City. Based on demand and infrastructure standards, the maximum allowable Police impact fees by type of land use are: $220 per average-size single family detached unit and $214 per multifamily/other unit. Residential fees are provided by size of single family housing unit (by bedroom). As noted above, this allows for a more "progressive" schedule where smaller units with fewer persons per unit would be assessed a lower fee than larger units with more occupants. (See Figure 2.) For nonresidential land uses, impact fee amounts vary by use and size of establishment. Examples of maximum allowable amounts are: $0.13 per square foot for retail; $0.04 per square foot for office; and $0.01 per square foot for manufacturing uses. (See Figure 2.)

The **Fire** impact fee is based on Fire facilities and apparatus/equipment serving the City of Sandpoint. Fire impact fees are calculated for both residential and nonresidential development using calls for service proportionate share factors to allocate capital costs to residential or nonresidential land uses. Fire impact fees are based on an incremental approach using current levels of service for fire facility space and apparatus serving the City. Based on demand and infrastructure standards, the maximum allowable Fire impact fees by type of land use are: $567 per average-size single family detached unit and $550 per multifamily/other unit. Residential fees are provided by size of single family housing unit (by bedroom). As noted above, this allows for a more "progressive" schedule where smaller units with fewer persons per unit would be assessed a lower fee than larger units with more occupants. (See Figure 2.) For nonresidential land uses, impact fee amounts vary by use and size of establishment. Examples of maximum allowable amounts are: $0.94 per square foot for retail; $0.32 per square foot for office; and $0.11 per square foot for manufacturing uses. (See Figure 2.)

The **Transportation** impact fee includes two main components (1) Streets and Intersection Improvements and (2) Multi-purpose Pathways. Both components are calculated for residential and nonresidential land uses. The City of Sandpoint development impact fee for Streets infrastructure addresses the need for circulation improvements as identified in the Urban Area Transportation Plan. Improvements are on arterials and collectors and include widenings, adding lanes, realignments, intersection improvements, and installation of traffic signals and roundabouts. All improvements will provide additional capacity and are needed to serve new development. For development outside Urban Renewal Areas (URA), maximum allowable impact fees by type of land use for the Streets component are: $3,382 per unit for an average-size single family detached unit and $2,872 per unit for multifamily/other unit. (Separate fee schedules are provided for each URA to account for property tax funding; see the end of this chapter.) Residential fees are provided by size of single family housing unit (by bedroom). As noted above, this allows for a more "progressive" schedule where smaller units that generate fewer vehicle trips per unit are assessed a lower fee than larger units with more vehicle trips. For nonresidential land uses, impact fee amounts vary by use and size of establishment. Examples of maximum allowable amounts are: $7.14 per square foot for retail; $2.65 per square foot for office; and $0.92 per square foot for manufacturing uses. (See Figure 2.)

The **Multi-use Pathways** fee component is derived using an incremental approach and is based on the current linear miles of multi-use pathways in the City of Sandpoint. The maximum allowable impact fees by type of land use for Pathways are: $369 per unit for an average-size single family detached unit and $358 per unit for multifamily/other unit. Residential fees are provided by size of single family housing unit (by bedroom). For nonresidential land uses, impact fee amounts vary by use and size of establishment. Examples of maximum allowable amounts are: $0.21 per square foot for retail; $0.07 per square foot for office; and $0.03 per square foot for manufacturing uses. (See Figure 2.)

A summary of methodologies used in the analysis is provided below in Figure 1.

Figure 1. Summary of City of Sandpoint Impact Fee Methodologies

Fee Category	Components	Methodologies
Parks and Recreation	• Park land acquisition • Park improvements • Recreation facility space	Incremental Expansion
Police	• Police Station • Communications Infrastructure	Incremental Expansion
Fire	• Fire Stations • Apparatus/Equipment	Incremental Expansion
Transportation	• Streets and Intersections • Multi-use Pathways	Plan-Based Incremental Expansion

MAXIMUM ALLOWABLE DEVELOPMENT IMPACT FEES BY TYPE OF LAND USE

Figure 2 provides a schedule of the *maximum allowable development impact fees* by type of land use for the City of Sandpoint. The fees represent the highest amount allowable for each type of applicable land use, which represents new growth's fair share of the cost for capital facilities. The City may adopt fees that are less than the amounts shown. However, a reduction in impact fee revenue will necessitate an increase in other revenues, a decrease in planned capital expenditures, and/or a decrease in levels of service.

The fees for residential development are to be assessed per housing unit with the option of assessing by size of unit (based on bedroom count) and should be collected when building permits are issued. For nonresidential development, the fees are assessed per square feet of floor area, and also should be collected when building permits are issued. Nonresidential development categories are consistent with the terminology and definitions contained in the reference book, *Trip Generation*, published by

the Institute of Transportation Engineers. These definitions can be found in the Implementation and Administration section at the back of this report.

Figure 2. Summary of Maximum Allowable Development Impact Fees by Land Use: Outside Urban Renewal Areas

			Parks & Recreation	Police	Fire	Transportation: Streets *	Transportation: Pathways	TOTAL Impact Fee	Total Current Fee	Increase (Decrease)
Residential		Number of Bedrooms	~~~~~~~~~~~~~~~~~~ Per Housing Unit ~~~~~~~~~~~~~~~~~~							
	Multifamily/Other	All Sizes	$2,437	$214	$550	$2,872	$358	*$6,431*	$3,668	$2,763
	Single Family	0-3	$2,256	$198	$509	$3,138	$332	*$6,433*	$3,882	$2,551
	Single Family	4+	$3,378	$297	$763	$4,219	$497	*$9,154*	$3,882	$5,272
	Single Family	*Avg*	*$2,510*	*$220*	*$567*	*$3,382*	*$369*	*$7,048*	*$3,882*	*$3,166*
Nonresidential			~~~~~~~~~~~~~~ Per Square Foot of Floor Area ~~~~~~~~~~~~~~							
820	Commercial / Shpg Ctr Average		n/a	$0.13	$0.94	$7.14	$0.21	*$8.43*	$2.34	$6.09
710	Office		n/a	$0.04	$0.32	$2.65	$0.07	*$3.08*	$0.90	$2.18
151	Mini-Warehouse		n/a	$0.01	$0.07	$0.60	$0.02	*$0.70*	$0.52	$0.18
150	Warehousing		n/a	$0.01	$0.10	$0.85	$0.02	*$0.99*	$0.57	$0.42
140	Manufacturing		n/a	$0.01	$0.11	$0.92	$0.03	*$1.07*	$0.58	$0.49
110	Light Industrial		n/a	$0.03	$0.20	$1.68	$0.05	*$1.95*	$0.72	$1.23

** See other fee schedules for Urban Renewal Areas*

CREDITS AND GEOGRAPHIC AREA

A general requirement common to impact fee methodologies is the evaluation of *credits*. Two types of credits should be considered, **future revenue credits** and **site-specific credits**. Revenue credits may be necessary to avoid potential double payment situations arising from a one-time impact fee plus the payment of other revenues (e.g., property taxes) that may also fund growth-related capital improvements. Because new development may provide front-end funding of infrastructure, there is a potential for double payment of capital costs due to future payments on debt for public facilities. No credits for existing or future principal and interest payments are necessary for the City of Sandpoint fees because there is no outstanding debt for the infrastructure categories in the fee program.

Credits are calculated and included for Transportation fees to account for tax increment financing in the City's Urban Renewal Areas. Also considered is a credit to account for General Fund contributions for appropriate capital improvements. This reduction is included to account for the extent to which new development may have already contributed to the cost of existing facilities where appropriate. This is shown throughout as: "Reduction for Prior General Fund Contribution."

The second type of credit is a **site-specific credit** for system improvements that have been included in the impact fee calculations. Policies and procedures related to site-specific credits for system improvements should be addressed in the ordinance that establishes the development fees.

However, the general concept is that developers may be eligible for site-specific credits only if they provide system improvements that have been included in the impact fee calculations. Project improvements normally required as part of the development approval process are not eligible for credits against impact fees.

Due to the credits mentioned above, reduced fee schedules are provided below that integrate the credit necessary to account for property tax funding of future road projects. All other fees stay the same except the Transportation (Streets) fee.

Figure 3. Summary of Maximum Allowable Development Impact Fees by Land Use: Downtown Urban Renewal Area

			Parks & Recreation	Police	Fire	Transportation: Streets *	Transportation: Pathways	TOTAL Impact Fee	Total Current Fee	Increase (Decrease)
Residential		Number of Bedrooms	~~~~~~~~~~ Per Housing Unit ~~~~~~~~~~							
	Multifamily/Other	All Sizes	$2,437	$214	$550	$2,435	$358	*$5,994*	$3,668	$2,326
	Single Family	0-3	$2,256	$198	$509	$2,661	$332	*$5,956*	$3,882	$2,074
	Single Family	4+	$3,378	$297	$763	$3,577	$497	*$8,512*	$3,882	$4,630
	Single Family	*Avg*	*$2,510*	*$220*	*$567*	*$2,867*	*$369*	*$6,533*	*$3,882*	*$2,651*
Nonresidential			~~~~~~~~~~ Per Square Foot of Floor Area ~~~~~~~~~~							
820	Commercial / Shpg Ctr	Average	n/a	$0.13	$0.94	$6.05	$0.21	*$7.34*	$2.34	$5.00
710	Office		n/a	$0.04	$0.32	$2.25	$0.07	*$2.68*	$0.90	$1.78
151	Mini-Warehouse		n/a	$0.01	$0.07	$0.51	$0.02	*$0.61*	$0.52	$0.09
150	Warehousing		n/a	$0.01	$0.10	$0.72	$0.02	*$0.86*	$0.57	$0.29
140	Manufacturing		n/a	$0.01	$0.11	$0.78	$0.03	*$0.93*	$0.58	$0.35
110	Light Industrial		n/a	$0.03	$0.20	$1.42	$0.05	*$1.69*	$0.72	$0.97

**Reduced due to credit in Urban Renewal Areas*

Figure 4. Summary of Maximum Allowable Development Impact Fees by Land Use: Northern Urban Renewal Area

			Parks & Recreation	Police	Fire	Transportation: Streets *	Transportation: Pathways	TOTAL Impact Fee	Total Current Fee	Increase (Decrease)
Residential		Number of Bedrooms	~~~~~~~~~~ Per Housing Unit ~~~~~~~~~~							
	Multifamily/Other	All Sizes	$2,437	$214	$550	$2,488	$358	*$6,047*	$3,668	$2,379
	Single Family	0-3	$2,256	$198	$509	$2,718	$332	*$6,013*	$3,882	$2,131
	Single Family	4+	$3,378	$297	$763	$3,654	$497	*$8,589*	$3,882	$4,707
	Single Family	*Avg*	*$2,510*	*$220*	*$567*	*$2,929*	*$369*	*$6,595*	*$3,882*	*$2,713*
Nonresidential			~~~~~~~~~~ Per Square Foot of Floor Area ~~~~~~~~~~							
820	Commercial / Shpg Ctr	Average	n/a	$0.13	$0.94	$6.18	$0.21	*$7.47*	$2.34	$5.13
710	Office		n/a	$0.04	$0.32	$2.30	$0.07	*$2.73*	$0.90	$1.83
151	Mini-Warehouse		n/a	$0.01	$0.07	$0.52	$0.02	*$0.62*	$0.52	$0.10
150	Warehousing		n/a	$0.01	$0.10	$0.74	$0.02	*$0.88*	$0.57	$0.31
140	Manufacturing		n/a	$0.01	$0.11	$0.79	$0.03	*$0.94*	$0.58	$0.36
110	Light Industrial		n/a	$0.03	$0.20	$1.45	$0.05	*$1.72*	$0.72	$1.00

**Reduced due to credit in Urban Renewal Areas*

Please note, calculations throughout this report are based on an analysis conducted using Excel software. Results are discussed in the memo using one-and two-digit places (in most cases). Figures are typically either truncated or rounded. In some instances, the analysis itself uses figures carried to their ultimate decimal places; therefore the sums and products generated in the analysis may not equal the sum or product if the reader replicates the calculation with the factors shown in the report (due to the rounding of figures shown, not in the analysis).

INTRODUCTION TO IMPACT FEES

DEFINITION

Development impact fees, also known as impact fees or development fees, are one-time payments used to fund capital improvements necessitated by new growth. Development impact fees have been utilized by local governments in various forms for at least fifty years. Impact fees do have limitations, and should not be regarded as the total solution for infrastructure financing needs. Rather, they should be considered one component of a comprehensive portfolio to ensure adequate provision of public facilities with the goal of maintaining current levels of service in a community. Any community considering development impact fees should note the following limitations:

- Development impact fees can only be used to finance capital infrastructure and cannot be used to finance ongoing operations and/or maintenance and rehabilitation costs;
- Development impact fees cannot be deposited in the local government's General Fund. The funds must be accounted for separately in individual accounts and earmarked for the capital expenses for which they were collected; and
- Development impact fees cannot be used to correct existing infrastructure deficiencies unless there is a funding plan in place to correct the deficiency for all current residents and businesses in the community.

LEGAL FRAMEWORK

U.S. Constitution. Like all land use regulations, development exactions—including development impact fees—are subject to the Fifth Amendment prohibition on taking of private property for public use without just compensation. Both state and federal courts have recognized the imposition of impact fees on development as a legitimate form of land use regulation, provided the fees meet standards intended to protect against regulatory takings. To comply with the Fifth Amendment, development regulations must be shown to substantially advance a legitimate governmental interest. In the case of impact fees, that interest is in the protection of public health, safety, and welfare by ensuring that development is not detrimental to the quality of essential public services.

There is little federal case law specifically dealing with impact fees, although other rulings on other types of exactions (e.g., land dedication requirements) are relevant. In one of the most important exaction cases, the U. S. Supreme Court found that a government agency imposing exactions on

development must demonstrate an "essential nexus" between the exaction and the interest being protected. (See *Nollan v. California Coastal Commission,* 1987.) In a more recent case (*Dolan v. City of Tigard, OR,* 1994), the Court ruled that an exaction also must be "roughly proportional" to the burden created by development. However, the *Dolan* decision appeared to set a higher standard of review for mandatory dedications of land than for monetary exactions such as development impact fees.

REQUIRED FINDINGS

There are three reasonable relationship requirements for development impact fees that are closely related to "rational nexus" or "reasonable relationship" requirements enunciated by a number of state courts. Although the term "dual rational nexus" is often used to characterize the standard by which courts evaluate the validity of development impact fees under the U.S. Constitution, we prefer a more rigorous formulation that recognizes three elements: "impact or need," "benefit," and "proportionality." The dual rational nexus test explicitly addresses only the first two, although proportionality is reasonably implied, and was specifically mentioned by the U.S. Supreme Court in the *Dolan* case. The reasonable relationship language of the statute is considered less strict than the rational nexus standard used by many courts. Individual elements of the nexus standard are discussed further in the following paragraphs.

Demonstrating an Impact. All new development in a community creates additional demands on some, or all, public facilities provided by local government. If the supply of facilities is not increased to satisfy that additional demand, the quality or availability of public services for the entire community will deteriorate. Impact/development impact fees may be used to recover the cost of development-related facilities, but only to the extent that the need for facilities is a consequence of development that is subject to the fees. The *Nollan* decision reinforced the principle that development exactions may be used only to mitigate conditions created by the developments upon which they are imposed. That principle clearly applies to impact fees. In this study, the impact of development on improvement needs is analyzed in terms of quantifiable relationships between various types of development and the demand for specific facilities, based on applicable level-of-service standards.

Demonstrating a Benefit. A sufficient benefit relationship requires that facility fee revenues be segregated from other funds and expended only on the facilities for which the fees were charged. Fees must be expended in a timely manner and the facilities funded by the fees must serve the development paying the fees. However, nothing in the U.S. Constitution or the State enabling Act requires that facilities funded with fee revenues be available *exclusively* to development paying the fees. In other words, existing development may benefit from these improvements as well.

Procedures for the earmarking and expenditure of fee revenues are typically mandated by the State enabling act, as are procedures to ensure that the fees are expended expeditiously or refunded. All of these requirements are intended to ensure that developments benefit from the fees they are required to pay. Thus, an adequate showing of benefit must address procedural as well as substantive issues.

Demonstrating Proportionality. The requirement that exactions be proportional to the impacts of development was clearly stated by the U.S. Supreme Court in the *Dolan* case (although the relevance of that decision to impact fees has been debated) and is logically necessary to establish a proper nexus. Proportionality is established through the procedures used to identify development-related facility costs, and in the methods used to calculate impact fees for various types of facilities and categories of development. The demand for facilities is measured in terms of relevant and measurable attributes of development. For example, the need for school improvements is measured by the number of public school-age children generated by development.

METHODOLOGIES AND CREDITS

Any one of several legitimate methods may be used to calculate development impact fees. The choice of a particular method depends primarily on the service characteristics and planning requirements for the facility type being addressed. Each method has advantages and disadvantages in a particular situation, and to some extent can be interchangeable, because each allocates facility costs in proportion to the needs created by development.

Reduced to its simplest terms, the process of calculating development impact fees involves two main steps: (1) determining the cost of development-related capital improvements and (2) allocating those costs equitably to various types of development. In practice, though, the calculation of impact fees can become quite complicated because of the many variables involved in defining the relationship between development and the need for facilities. The following paragraphs discuss three basic methods for calculating development impact fees and how those methods can be applied.

Plan-Based Fee Calculation. The plan-based method allocates costs for a specified set of improvements to a specified amount of development. The improvements are identified by a facility plan and development is identified by a land use plan. In this method, the total cost of relevant facilities is divided by total demand to calculate a cost per unit of demand. Then, the cost per unit of demand is multiplied by the amount of demand per unit of development (e.g., housing units or square feet of building area) in each category to arrive at a cost per specific unit of development (e.g., single family detached unit).

Cost Recovery or Buy-In Fee Calculation. The rationale for the cost recovery approach is that new development is paying for its share of the useful life and remaining capacity of facilities already built or land already purchased from which new growth will benefit. This methodology is often used for systems that were oversized such as sewer and water facilities.

Incremental Expansion Fee Calculation. The incremental expansion method documents the current level of service (LOS) for each type of public facility in both quantitative and qualitative measures, based on an existing service standard (such as square feet per student). This approach ensures that there are no existing infrastructure deficiencies or surplus capacity in infrastructure. New development is only paying its proportionate share for growth-related infrastructure. The level of service standards are determined in a manner similar to the current replacement cost approach used by property insurance companies. However, in contrast to insurance practices, the fee revenues would not be for renewal and/or replacement of existing facilities. Rather, revenue will be used to expand or provide additional facilities, as needed, to accommodate new development. An incremental expansion cost method is best suited for public facilities that will be expanded in regular increments, with LOS standards based on current conditions in the community.

Credits. Regardless of the methodology, a consideration of "credits" is integral to the development of a legally valid impact fee methodology. There are two types of "credits" each with specific, distinct characteristics, but both of which should be addressed in the development of development impact fees. The first is a credit due to possible double payment situations. This could occur when contributions are made by the property owner toward the capital costs of the public facility covered by the impact fee. This type of credit is integrated into the impact fee calculation. The second is a credit toward the payment of a fee for dedication of public sites or improvements provided by the developer and for which the facility fee is imposed. This type of credit is addressed in the administration and implementation of a facility fee program.

GENERIC IMPACT FEE CALCULATION

In contrast to development exactions, which are typically referred to as project-level improvements, impact fees fund growth-related infrastructure that will benefit multiple development projects, or the entire jurisdiction (often referred to as "system-level" improvements). The basic steps in a generic impact fee formula are illustrated in Figure 5. The first step (see the left box) is to determine an appropriate demand indicator, or service unit, for the particular type of infrastructure. The demand/service indicator measures the number of demand or service units for each unit of development. For example, an appropriate indicator of the demand for parks is population growth and the increase in population can be estimated from the average number of persons per occupied

housing unit. The second step in the generic impact fee formula is shown in the middle box below. Infrastructure units per demand unit are typically called Level-Of-Service (LOS) standards. In keeping with the park example, a common LOS standard is park acreage per thousand people. The third step in the generic impact fee formula, as illustrated in the right box, is the cost of various infrastructure units. To complete the park example, this part of the formula would establish the cost per acre for land acquisition and/or development.

Figure 5. Generic Impact Fee Formula

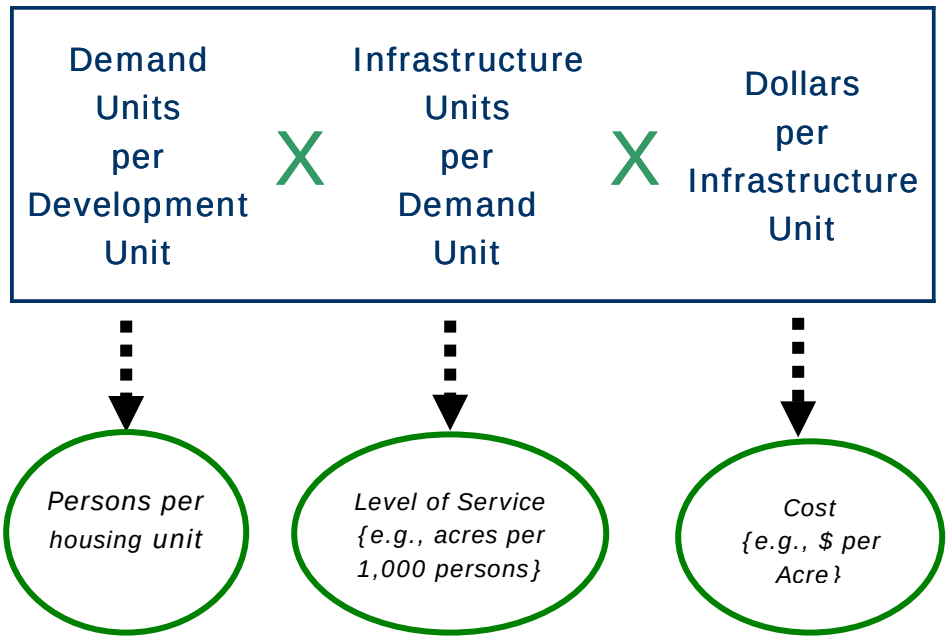

CAPITAL IMPROVEMENTS PLANS

The Idaho Development Impact Fee Act requires Capital Improvements Plans (CIP) that identifies infrastructure demands by new development activity and proposes public facilities to meet those demands. The growth-related capital improvements discussed below are based on the infrastructure standards and cost factors documented in the impact fee section of this report. As part of its annual budget process, the City of Sandpoint will provide more detailed data on specific projects consistent with this planning-level CIP, which is required by Idaho Code 67-8208.

DEMAND FOR INFRASTRUCTURE

TischlerBise calculated the demand for facilities using local infrastructure levels of service standards or capital improvement plans from the City of Sandpoint. Growth indicators for the development fee study are summarized in Figure 6. Residential growth is projected at 1.5 percent annual growth, and nonresidential growth (employment) is projected at a 1.45 percent growth in employment over the projection period. These projections were used to estimate potential revenue generated from the development fees and calculate future levels of service as required by Idaho Impact Fee law. Further detail on growth projections is provided in the Appendix to this report.

Figure 6. Summary of Growth Indicators

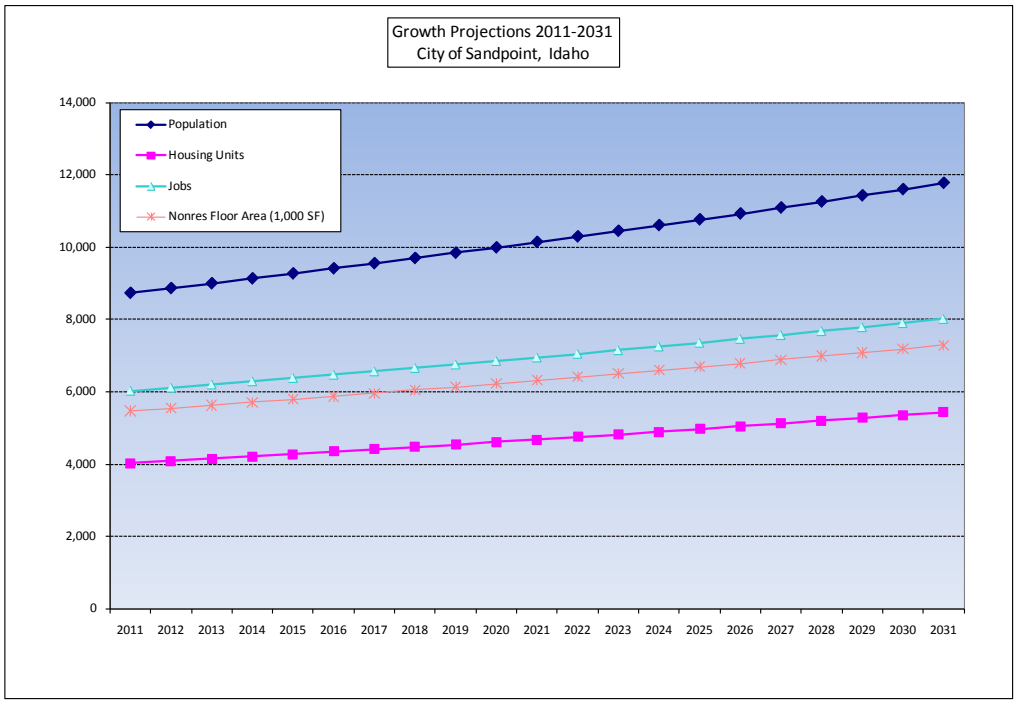

TischlerBise identified appropriate demand indicators or "service units," as defined by the Idaho Development Impact Fee Act. Projected service units over the next ten years are listed in Figure 7. For Parks infrastructure, service units are persons; for Police and Fire, service units are persons for residential development and nonresidential vehicle trips for nonresidential development; and for Transportation Streets improvements, service units are vehicle miles of travel for both residential and nonresidential development, and for Multi-use Pathways, service units are persons for residential development and nonresidential vehicle trips for nonresidential development. The Transportation chapter provides vehicle miles of travel (VMT) calculations/conversions and the Appendix provides greater detail on all service unit assumptions.

Figure 7. Projected Demand or Service Units

			Base Yr	1	2	3	4	5	6	7	8	9	10	11	12	13	14	15	20	Cumulative Increase	Avg. Ann. Increase
		Year=>	2011	2012	2013	2014	2015	2016	2017	2018	2019	2020	2021	2022	2023	2024	2025	2026	2031	2011-2031	2011-2031
SUMMARY OF DEMAND PROJECTIONS (City Limits)																					
TOTAL POPULATION			8,737	8,868	9,001	9,136	9,273	9,412	9,553	9,697	9,842	9,990	10,140	10,292	10,446	10,603	10,762	10,923	11,767	**3,030**	**152**
TOTAL HOUSING UNITS			4,034	4,094	4,155	4,218	4,281	4,345	4,410	4,477	4,544	4,612	4,681	4,751	4,823	4,895	4,968	5,043	5,433	**1,399**	**70**
TOTAL JOBS			6,016	6,103	6,192	6,282	6,373	6,465	6,559	6,654	6,751	6,848	6,948	7,048	7,151	7,254	7,359	7,466	8,023	**2,007**	**100**
TOTAL POPULATION AND JOBS			14,753	14,971	15,193	15,418	15,646	15,877	16,112	16,351	16,593	16,838	17,087	17,340	17,597	17,857	18,121	18,390	19,791	**5,038**	**252**
Jobs to Population Ratio			0.69	0.69	0.69	0.69	0.69	0.69	0.69	0.69	0.69	0.69	0.69	0.68	0.68	0.68	0.68	0.68	0.68		
RESIDENTIAL DEVELOPMENT																					
Population			8,737	8,868	9,001	9,136	9,273	9,412	9,553	9,697	9,842	9,990	10,140	10,292	10,446	10,603	10,762	10,923	11,767	**3,030**	**152**
Housing Units	*Unit Mix*																				
Single Family Detached	*66%*		2,655	2,695	2,735	2,776	2,818	2,860	2,903	2,947	2,991	3,036	3,081	3,127	3,174	3,222	3,270	3,319	3,576	**921**	**46**
Multifamily	*34%*		1,379	1,399	1,420	1,442	1,463	1,485	1,507	1,530	1,553	1,576	1,600	1,624	1,648	1,673	1,698	1,723	1,857	**478**	**24**
TOTAL			4,034	4,094	4,155	4,218	4,281	4,345	4,410	4,477	4,544	4,612	4,681	4,751	4,823	4,895	4,968	5,043	5,433	**1,399**	**70**
NONRESIDENTIAL DEVELOPMENT																					
Nonres Floor Area (1,000 SF)	*% of ttl*																				
Commercial (1,000 SF)	*16%*		863	876	889	902	915	928	941	955	969	983	997	1,012	1,026	1,041	1,056	1,072	1,152	**288**	**14**
Office/Instit (1,000 SF)	*43%*		2,348	2,382	2,417	2,452	2,487	2,523	2,560	2,597	2,635	2,673	2,712	2,751	2,791	2,831	2,872	2,914	3,131	**783**	**39**
Industrial/Flex (1,000 SF)	*41%*		2,259	2,292	2,325	2,359	2,393	2,427	2,463	2,498	2,535	2,571	2,609	2,646	2,685	2,724	2,763	2,803	3,013	**754**	**38**
TOTAL			5,470	5,550	5,630	5,712	5,795	5,879	5,964	6,050	6,138	6,227	6,317	6,409	6,502	6,596	6,692	6,789	7,296	**1,825**	**91**
Employment By Type																					
Commercial/Retail	21%		1,275	1,293	1,312	1,331	1,350	1,370	1,390	1,410	1,430	1,451	1,472	1,493	1,515	1,537	1,559	1,582	1,700	**425**	**21**
Office/Institutional	58%		3,467	3,517	3,568	3,620	3,672	3,725	3,779	3,834	3,890	3,946	4,003	4,061	4,120	4,180	4,241	4,302	4,623	**1,157**	**58**
Industrial/Flex	21%		1,275	1,293	1,312	1,331	1,350	1,370	1,390	1,410	1,430	1,451	1,472	1,493	1,515	1,537	1,559	1,582	1,700	**425**	**21**
TOTAL			6,016	6,103	6,192	6,282	6,373	6,465	6,559	6,654	6,751	6,848	6,948	7,048	7,151	7,254	7,359	7,466	8,023	**2,007**	**100**
VEHICLE TRIPS																					
Residential Trips	*Trip Rates*	*Adj. %*																			
Single Family Detached	*7.30*	*59%*	11,435	11,607	11,781	11,958	12,137	12,319	12,504	12,691	12,882	13,075	13,271	13,470	13,672	13,877	14,085	14,297	15,402	**3,966**	**198**
Multifamily	*6.20*	*59%*	5,043	5,118	5,195	5,273	5,352	5,432	5,514	5,597	5,681	5,766	5,852	5,940	6,029	6,120	6,211	6,305	6,792	**1,749**	**87**
TOTAL Residential Trips			16,478	16,725	16,976	17,231	17,489	17,751	18,018	18,288	18,562	18,841	19,123	19,410	19,701	19,997	20,297	20,601	22,193	**5,715**	**286**
Nonresidential Trips																					
Commercial (1,000 SF)	*42.94*	*38%*	14,089	14,293	14,500	14,711	14,924	15,140	15,360	15,583	15,809	16,038	16,270	16,506	16,746	16,988	17,235	17,485	18,790	**4,701**	**235**
Office/Instit (1,000 SF)	*11.01*	*50%*	12,926	13,113	13,304	13,496	13,692	13,891	14,092	14,296	14,504	14,714	14,927	15,144	15,363	15,586	15,812	16,041	17,239	**4,313**	**216**
Industrial/Flex (1,000 SF)	*3.82*	*50%*	4,314	4,377	4,440	4,505	4,570	4,636	4,704	4,772	4,841	4,911	4,982	5,055	5,128	5,202	5,278	5,354	5,754	**1,440**	**72**
TOTAL Nonresidential Trips			31,329	31,784	32,244	32,712	33,186	33,667	34,156	34,651	35,153	35,663	36,180	36,705	37,237	37,777	38,325	38,880	41,782	**10,453**	**523**
GRAND TOTAL Trips			47,807	48,509	49,220	49,943	50,675	51,419	52,173	52,939	53,716	54,504	55,303	56,115	56,938	57,774	58,621	59,482	63,976	**48,241**	**2,412**

ANNUAL INCREASES (City Limits)	*10-11*	*11-12*	*12-13*	*13-14*	*14-15*	*15-16*	*16-17*	*17-18*	*18-19*	*19-20*	*20-21*	*21-22*	*22-23*	*23-24*	*24-25*	*25-26*	*30-31*	*2011-2031 Avg Annual*
Population		131	133	135	137	139	141	143	145	148	150	152	154	157	159	161	174	**152**
Housing Units		61	61	62	63	64	65	66	67	68	69	70	71	72	73	75	80	**70**
Jobs		87	88	90	91	92	94	95	96	98	99	101	102	104	105	107	115	**100**
Nonres Floor Area (1,000 SF)		79	80	82	83	84	85	86	88	89	90	92	93	94	96	97	104	**91**

PROPOSED MEANS TO MEET THE DEMAND FOR PUBLIC FACILITIES

The demand for public facilities is a function of the projected demand/service units shown above and the infrastructure standards described in this report. For each type of capital improvement addressed in this report, a relationship is established between infrastructure units and demand/service units. Documentation of specific system improvements is contained in the discussion in the text of this report. For example, the City of Sandpoint currently has an adopted level of service of 8 acres of Parks per 1,000 persons (further discussion is in the Parks chapter). The cost of various infrastructure items have been summarized as cost factors per service unit. Documentation on specific system improvements is contained in the discussion of each type of infrastructure.

The State of Idaho requires impact fees to be calculated using levels of service "applicable to existing development as well as new growth and development." [See Idaho Statutes 67-8204(2).] Figure 8 provides detail on levels of service (or level of usage) and cost factors for each infrastructure category. Further detail for each category is provided in the respective chapter.

Figure 8. Summary of Infrastructure Level of Service Standards

Type of Public Facility	*LEVELS OF SERVICE*				*Infrastructure Cost Factor*	*Per Service Unit Cost Factor*		
	Infrastructure		*Service*					
PARKS and RECREATION	*Current*	*Adopted**	*Unit*	*Unit*		*Current*	*Adopted**	
Developed Parks	9.6	8.0	Acres of Parks	per 1,000 persons	$133,073 per acre	$1,273	$1,065	per person
Undeveloped Parks	1.1	0.0	Acres of Parks	per 1,000 persons	$30,000 per acre	$33	$0	per person
Public Recreation Facilities	0.62	na	Sq. Ft. of Indoor Rec Fac.	per person	$98 per sq. ft.	$61	na	per person
POLICE								
Police Station	0.48	na	sq. ft. of Police Station space	per person	$145 per sq. ft.	$70	na	per person
Police Station	0.04	na	sq. ft. of Police Station space	per nonres. vehicle trip	$145 per sq. ft.	$5	na	per nonres. trip
Communications Infrastructure	See ==>				$914,226 total cost (resid)	$21	na	per person
Communications Infrastructure	See ==>				$254,436 total cost (nonresid)	$2	na	per nonres. trip
FIRE								
Fire Station	0.64	na	sq. ft. of Fire Station space	per person	$134 per sq. ft.	$86	na	per person
Fire Station	0.14	na	sq. ft. of Fire Station space	per nonres. vehicle trip	$134 per sq. ft.	$19	na	per nonres. trip
Fire Apparatus/Major Equipment	0.38	na	units of Fire Apparatus	per 1,000 persons	$434,167 avg per unit	$166	na	per person
Fire Apparatus/Major Equipment	0.09	na	units of Fire Apparatus	per 1,000 nonres vehicle trip	$434,167 avg per unit	$37	na	per nonres. trip
TRANSPORTATION								
Streets/Intersection Improvements	See ==>				$4,304,243 growth-related costs	$95	na	per vehicle mile of travel
Multi-use Pathways	1.01	na	lin. mi. of Pathways	per 1,000 persons	$160,000 per lin. mi.	$162	na	per person
Multi-use Pathways	0.08	na	lin. mi. of Pathways	per 1,000 nonres vehicle trip	$160,000 per lin. mi.	$13	na	per nonres. trip

** Used in the Parks impact fee calculations.*

CAPITAL IMPROVEMENT PLANS

The following section provides a summary of the Capital Improvement Plans depicting *growth-related capital demands and costs* on which the fees are based. Each infrastructure category is discussed in turn.

Parks and Recreation

The City's Park system includes a total of 93.2 acres of developed and undeveloped parks. This results in a current level of service of 10.7 acres per 1,000 persons (9.6 acres of developed parks per 1,000 persons and 1.1 acres of undeveloped acres per 1,000 persons). Based on discussion and direction from the City, the impact fees herein are calculated based on the City's **adopted** level of service of 8 acres per 1,000 persons (lower than what is provided currently). The City plans to continue to maintain this adopted level of service. An incremental approach is used to derive the impact fee to ensure this level of service is maintained to serve new development.

In addition to Parks, the City has an Indoor Recreation facility, which is used to establish a current level of service that the City plans to maintain in the future. The use of existing standards means there are no existing infrastructure deficiencies. New development is only paying its proportionate share for growth-related infrastructure.

A summary of the Parks and Recreation CIP is included below in Figure 9. As shown, the following additional infrastructure is needed to maintain adopted levels of service over the next five years: 5.4 acres of developed parks; and 417 square feet of indoor recreation center space. Total projected Parks and Recreation capital improvement costs in current dollars are $759,902.

Figure 9. Parks and Recreation Capital Improvement Plan

	Year =>	Base Yr 2011	1 2012	2 2013	3 2014	4 2015	5 2016	5-Yr Net Increase
DEMAND PROJECTIONS *(cumulative)*								
Population		8,737	8,868	9,001	9,136	9,273	9,412	675
Single Family Housing Units		2,655	2,695	2,735	2,776	2,818	2,860	205
Multifamily Housing Units		1,379	1,399	1,420	1,442	1,463	1,485	107
CAPITAL IMPROVEMENT NEEDS DUE TO GROWTH								
PARKS & RECREATION								
Park Facilities: Acres Needed to Serve Growth								
ADOPTED LEVEL OF SERVICE			1 2012	2 2013	3 2014	4 2015	5 2016	5-Year Total
	Adopted LOS							
Developed Parkland (Acres Needed)	Acres per Person 0.008							
	Annual Acres		1.0	1.1	1.1	1.1	1.1	5.4
	Cumulative Acres		*1.0*	*2.1*	*3.2*	*4.3*	*5.4*	
	Cost/Acre							
Land Costs: Developed	Parkland Acquisition Cost $30,000		$31,453	$31,925	$32,404	$32,890	$33,383	$162,056
Improvement Costs: Developed	Park Improvement Cost $103,073		$108,066	$109,687	$111,332	$113,002	$114,697	$556,785
TOTAL ANNUAL COSTS			*$139,519*	*$141,612*	*$143,736*	*$145,892*	*$148,081*	*$718,841*
TOTAL CUMULATIVE COSTS			*$139,519*	*$281,131*	*$424,868*	*$570,760*	*$718,841*	
Recreation Facilities								
CURRENT LEVELS OF SERVICE			1 2012	2 2013	3 2014	4 2015	5 2016	5-Year Total
Recreation Facility (SF Needed)	Sq. Ft. per Person 0.62							
	Annual Square Feet		81.0	82.2	83.4	84.7	86.0	417.3
	Cumulative Square Feet		*81.0*	*163.2*	*246.6*	*331.3*	*417.3*	
	Cost/Sq. Ft.							
Recreation Facility Costs	Rec Ctr Costs $98		$7,970	$8,089	$8,210	$8,334	$8,459	$41,061
TOTAL ANNUAL COSTS			*$7,970*	*$8,089*	*$8,210*	*$8,334*	*$8,459*	$41,061
TOTAL CUMULATIVE COSTS			*$7,970*	*$16,059*	*$24,269*	*$32,603*	*$41,061*	
PARKS AND RECREATION TOTAL								
	GRAND TOTAL ANNUAL COSTS		*$147,489*	*$149,701*	*$151,947*	*$154,226*	*$156,539*	*$759,902*
	GRAND TOTAL CUMULATIVE COSTS		*$147,489*	*$297,190*	*$449,137*	*$603,363*	*$759,902*	

Police

The Sandpoint Police Department has two components impacted by growth: Police facility space and Communications Infrastructure. The City currently has a Police Station with 5,394 square feet. The current facility is at capacity per the City Police Department. To maintain current levels of service, new development in the City will require additional capacity to accommodate increased Police demand. The Police Department has indicated a need for additional space for evidence and records storage.

The City of Sandpoint Police Department is developing a mobile data computer system with the required wireless infrastructure throughout the City to allow for effective service by officers in the field. The City has developed the backbone of the system and is currently building out the remainder of the system.

The Police CIP is shown in Figure 10. Service units for residential development are persons and nonresidential vehicle trips for nonresidential development. The CIP depicts annual capital needs required by new development. The costs shown ($78,097 over 5 years) are those that are attributable to new development.

Figure 10. Police CIP

Year =>	Base Yr 2011	1 2012	2 2013	3 2014	4 2015	5 2016	5-Yr Net Increase
DEMAND PROJECTIONS *(cumulative)*							
Population	8,737	8,868	9,001	9,136	9,273	9,412	675
Nonresidential Vehicle Trips	31,329	31,784	32,244	32,712	33,186	33,667	2,338
CAPITAL IMPROVEMENT NEEDS DUE TO GROWTH							
POLICE							
Police Station		1 2012	2 2013	3 2014	4 2015	5 2016	5-Year Totals
Police Station: Growth-Related Needs							
SF Per Person	*0.48*	63	64	65	66	67	**326**
SF Per Nonres Trip	*0.04*	17	17	18	18	18	**88**
Annual Square Footage Needed Due to Growth		80	82	83	84	85	**414**
	Cost/SF						
Annual Police Station Costs — *Police Station Costs*	*$145*	*$11,647*	*$11,820*	*$11,996*	*$12,175*	*$12,356*	***$59,995***
Communications Infrastructure							
Communications Infrastructure: Growth-Related Needs							
Costs Per Person	*$21.13*	$2,769	$2,811	$2,853	$2,896	$2,939	**$14,268**
Costs Per Nonres Trip	*$1.64*	$745	$756	$767	$778	$789	**$3,835**
Annual Communications Infrastructure Costs Needed Due to Growth		*$3,514*	*$3,567*	*$3,620*	*$3,674*	*$3,728*	***$18,102***
GRAND TOTAL POLICE COSTS (Annual Due to Growth)		**$15,161**	**$15,387**	**$15,616**	**$15,849**	**$16,085**	**$78,097**

Fire

The Sandpoint Fire Department has two components impacted by growth: Fire Station Space and Apparatus/Major Equipment. The City currently has a Fire Station with 4,656 square feet and an Apparatus Bay with 5,454 square feet. To maintain current levels of service, new development in the City will require additional station and apparatus storage capacity to accommodate increased Fire demand for services.

Future growth in the City will also require an expansion of the department's fleet and communications infrastructure to serve new development to maintain current levels of service. An incremental expansion approach is used to determine current levels of service and the costs to serve growth to maintain this level of service.

The Fire CIP is shown in Figure 11. Service units for residential development are persons and nonresidential vehicle trips for nonresidential development. The CIP depicts annual capital needs required by new development. The costs shown ($301,622 over 5 years) are those that are attributable to new development.

Figure 11. Fire CIP

Year =>	Base Yr 2011	1 2012	2 2013	3 2014	4 2015	5 2016	5-Yr Net Increase
DEMAND PROJECTIONS *(cumulative)*							
Population	8,737	8,868	9,001	9,136	9,273	9,412	675
Nonresidential Vehicle Trips	31,329	31,784	32,244	32,712	33,186	33,667	2,338
CAPITAL IMPROVEMENT NEEDS DUE TO GROWTH							
Fire							
Fire Station		1 2012	2 2013	3 2014	4 2015	5 2016	5-Year Totals
Fire Station: Growth-Related Needs							
SF Per Person	*0.64*	84	86	87	88	89	**434**
SF Per Nonres Trip	*0.14*	65	66	67	68	69	**335**
Annual Square Footage Needed Due to Growth		149	152	154	156	158	**769**
	Cost/SF						
Annual Fire Station Costs *Fire Station Costs*	*$134*	$20,071	$20,368	$20,669	$20,974	$21,284	**$103,366**
Fire Apparatus & Major Equipment							
Fire Apparatus/Equipment: Growth-Related Needs							
Unit Per 1,000 Persons	*0.38*	0.05	0.05	0.05	0.05	0.05	**0.26**
Unit Per 1,000 Nonres Trips	*0.09*	0.04	0.04	0.04	0.04	0.04	**0.20**
Annual Units Needed Due to Growth		0.09	0.09	0.09	0.09	0.09	**0.46**
Costs Per Person	*$165.62*	$21,705	$22,031	$22,361	$22,697	$23,037	**$111,832**
Costs Per Nonres Trip	*$36.96*	$16,791	$17,034	$17,281	$17,532	$17,786	**$86,423**
Annual Communications Infrastructure Costs Needed Due to Growth		$38,496	$39,065	$39,643	$40,229	$40,823	**$198,255**
GRAND TOTAL Fire COSTS (Annual Due to Growth)		**$58,567**	**$59,433**	**$60,311**	**$61,203**	**$62,108**	**$301,622**

Transportation

Streets and Intersection Improvements

The City has identified a subset of road improvements from the City of Sandpoint's portion of the "Urban Area Transportation Plan (UATP)" needed due to growth, anticipated to be built within the next 10 years, and funded either in part or wholly through local means. The Plan includes identification of other funding sources along with City funding, a portion of which is growth-related. Of the total cost, the City anticipates its share to be $13.8 million, with the remaining funding coming from other sources. This *growth-related* Streets CIP is included below in Figure 9. The City has been collecting and spending Street impact fees and currently has approximately $177,909 in the Circulation (Transportation) impact fee account. This fund balance is subtracted from the City's total

cost to reflect new growth's remaining share of the street improvement program. Further detail is provided in the Transportation chapter.

Figure 12. Transportation (Streets) Capital Improvement Plan (Capacity Improvements)

Plan Timing	City Proj. #	Project	Classification		Description	CITY COST	CITY COST (Urb. Ren.)*	TOTAL CITY COST	OTHER COST	TOTAL PROJ. COST	CITY COSTS Growth %**	CITY COSTS Growth $
Years 1-5	S-052	Schweitzer Cutoff Rd	Minor Arterial	Upgrade	Widen to arterial 3-B2 from N Boyer Ave to Sand Creek Bridge	$243,200		$243,200	$2,956,800	$3,200,000	19%	$44,992
Years 1-5	S-1103	Schweitzer Cutoff Rd @ Boyer Ave	Minor Arterial	Intersection	Add 1-lane roundabout	*included above*						
Years 1-5	S-1012	Pine Street@ Division Ave	Minor Arterial	Intersection	Add traffic signal and left turn bays to EB and WB approaches	$400,000		$400,000		$400,000	83%	$332,686
Years 6-10	S-012	Downtown Two-Way Operation (Downtown URA)	Principal Arterial	Upgrade	Convert Church, Cedar, Pine and 1st Streets to two-way operations		$7,250,000	$7,250,000		$7,250,000	16%	$1,142,075
Years 6-10	S-045	US-2 Extension (Curve Project) (Downtown URA)	Principal Arterial	New Construction	Extend US-2 as Arterial 5 from Boyer ave to Cedar St		$500,000	$500,000	$5,000,000	$5,500,000	16%	$78,764
Years 6-10	S-050	Baldy Mountain Rd (Northern URA)	Minor Arterial	Upgrade	Widen to Arterial 3-B2-LD frin Boyer Ave to western City limit		$3,200,000	$3,200,000		$3,200,000	39%	$1,256,000
Years 6-10	S-065	Woodland Drive	Major Collector	Reconstruction	Expand to Collector 3 from Great Northern Rd to Boyer Ave	$690,000		$690,000		$690,000	95%	$654,733
Years 6-10	S-026	Larch street	Major Collector	Reconstruction	Boyer avenue to Division Avenue	$789,000		$789,000		$789,000	45%	$356,177
Years 6-10	S-036	Ontario Ave	Major Collector	New Construction	Ontario at US-2; realign Ontario to perpendicular with US-2@Ridley Vi	$432,500		$432,500		$432,500	93%	$402,225
Years 6-10	S-1024	Cedar St @ Boyer Ave		intersection	Install roundabout with Boyer Ave @ Main Street	$300,000		$300,000		$300,000	72%	$214,500
		TOTALS			**TOTALS (Years 1-10)**	**$2,854,700**	**$10,950,000**	**$13,804,700**	**$7,956,800**	**$21,761,500**	32%	**$4,482,152**

TOTAL Cost (City Growth Share)	**$4,482,152**
City of Sandpoint Circulation Impact Fee Fund Balance	$177,909
Net Growth-Related Streets Cost (City Share)	***$4,304,243***

Multi-use Pathway Improvements

The City of Sandpoint has a system of Multi-use Pathways that are used for alternative modes of transportation. The City intends to build new miles of Pathways to maintain the current level of service by implementing a Multi-use Pathway impact fee to be implemented on residential and nonresidential development. Current levels of service are based on the current number of linear miles of multi-use pathways in the City of Sandpoint (11.31 miles). The Pathways CIP is shown below.

Figure 13. Pathways CIP

	Base Yr	1	2	3	4	5	5-Yr Net
Year =>	2011	2012	2013	2014	2015	2016	Increase
DEMAND PROJECTIONS *(cumulative)*							
Population	8,737	8,868	9,001	9,136	9,273	9,412	675
Nonresidential Vehicle Trips	31,329	31,784	32,244	32,712	33,186	33,667	2,338

CAPITAL IMPROVEMENT NEEDS DUE TO GROWTH

MULTI-USE PATHWAYS

Multi-use Pathways			1	2	3	4	5	5-Year
Multi-use Pathways: Growth-Related Needs			2012	2013	2014	2015	2016	Totals
	Lin. Mi. per 1,000 Persons	*1.01*	0.13	0.13	0.14	0.14	0.14	**0.68**
	Lin. Mile Per 1,000 Nonres Trips	*0.08*	0.04	0.04	0.04	0.04	0.04	**0.18**
	Annual Linear Miles Needed Due to Growth		0.17	0.17	0.17	0.18	0.18	**0.87**
	Cumulative Linear Miles Needed Due to Growth		*0.17*	*0.34*	*0.51*	*0.69*	*0.87*	
		Cost/Lin. Ft.						
Annual Pathways Costs	*Multi-use Pathway Costs*	*$160,000*	$26,952	$27,353	$27,761	$28,174	$28,594	**$138,834**
	CUMULATIVE COSTS		*$26,952*	*$54,305*	*$82,066*	*$110,240*	*$138,834*	

FUNDING SOURCES FOR CAPITAL IMPROVEMENTS

In determining the proportionate share of capital costs attributable to new development, the Idaho Development Fee Act states that local governments must consider historical, available, and alternative sources of funding for system improvements. This section provides a historical perspective on capital outlays for infrastructure included in the development fee analysis.

Historical Funding

Figure 14 shows capital outlay for capacity improvements from the City's General Fund for the previous three fiscal years. As shown, the only expenditures for capacity improvements from the General Fund over the past three fiscal years has been for street and intersection improvements and police (for the mobile data project). Per the Idaho Code, the development fees include a credit to account for these prior General Fund contributions for capacity improvements. This reduction is

included to account for the extent to which new development may have already contributed to the cost of existing facilities. Impact fee funding will provide a dedicated source of revenue for necessary future capital expenditures to serve new growth.

Figure 14. General Fund Capital Outlays for Capacity Improvements

Fiscal Year =>	***2007-08***	***2008-09***	***2009-10***	
Total General Fund Expenditures	$7,231,033	$6,240,792	$6,174,961	
General Fund Expenditures for Capital Improvements				***Reduction for Capital Improvements Funding***
Circulation	$0	$0	$116,032	0.6%
Parks	$0	$0	$0	0.0%
Police	$48,720	$3,966	$33,085	0.4%
Fire	$0	$0	$0	0.0%
Total	*$48,720*	*$3,966*	*$149,117*	

Source: City of Sandpoint

Potential Funding from Development Impact Fees

Potential development impact fee revenues are summarized in Figure 15, assuming implementation of the fees at the maximum allowable level as indicated in this report. Because each type of impact fee must be accounted for separately, TischlerBise has provided cash flow summaries in the impact fee study for each type of public facility. Over the next five years, development fees are projected to generate approximately $2.8 million based on the land use assumptions detailed in the Appendix to fund growth-related capital improvements if implemented at the maximum allowable level. Average annual development fee revenue is projected to be approximately $554,000 per year.

Figure 15. Projected Development Impact Fee Revenue

(Current $ in thousands)	1 2012	2 2013	3 2014	4 2015	5 2016	*5-Year Average Annual*	*5-Year Cumulative Total*
REVENUES							
Subtotal Parks Fees	$150	$153	$155	$157	$160	*$155*	*$775*
Subtotal Police Fees	$17	$17	$17	$18	$18	*$17*	*$86*
Subtotal Fire Fees	$60	$61	$62	$63	$64	*$62*	*$310*
Subtotal Transportation (Streets) Fees	$371	$377	$382	$388	$393	*$382*	*$1,911*
Subtotal Transportation (Pathways) Fees	$28	$28	$29	$29	$30	*$29*	*$144*
TOTAL FEE REVENUE	**$626**	**$636**	**$645**	**$655**	**$664**	**$554**	**$2,772**

The level of funding from development fees is a function of planned capital improvements, fee methodology, projected service units, timing, and applicable credits. Each of these factors is discussed in detail in the body of this report.

PARKS AND RECREATION DEVELOPMENT IMPACT FEES

The Parks and Recreation impact fee is based on the cost per service unit method specified in Idaho Code 67-8204(16), also referred to as the incremental method elsewhere in this report. Parks and recreation capital improvements are allocated 100 percent to residential development. Per the Idaho Act, a service unit is a person. Facilities included in the fee calculation are:

- Park land acquisition and improvements
- Recreation facility space

For Park land and improvements, the fees are based on adopted levels of service, which is lower than the City's current level of service. For the Recreation facility component, levels of service are based on current levels of service. The fee includes costs for land acquisition and improvements for both components of the fee. The Idaho Act restricts capital improvement to those with a useful life of at least ten years, therefore parks and recreation vehicles and equipment are excluded.

Figure 16 diagrams the general methodology used to calculate the Parks Impact Fee. It is intended to read like an outline, with lower levels providing a more detailed breakdown of the impact fee components. The park impact fee is derived from the product of persons per housing unit (by type of unit) multiplied by the net capital cost per person. The boxes in the next level down indicate detail on the components included in the fee.

Figure 16. Parks Impact Fee Methodology Chart

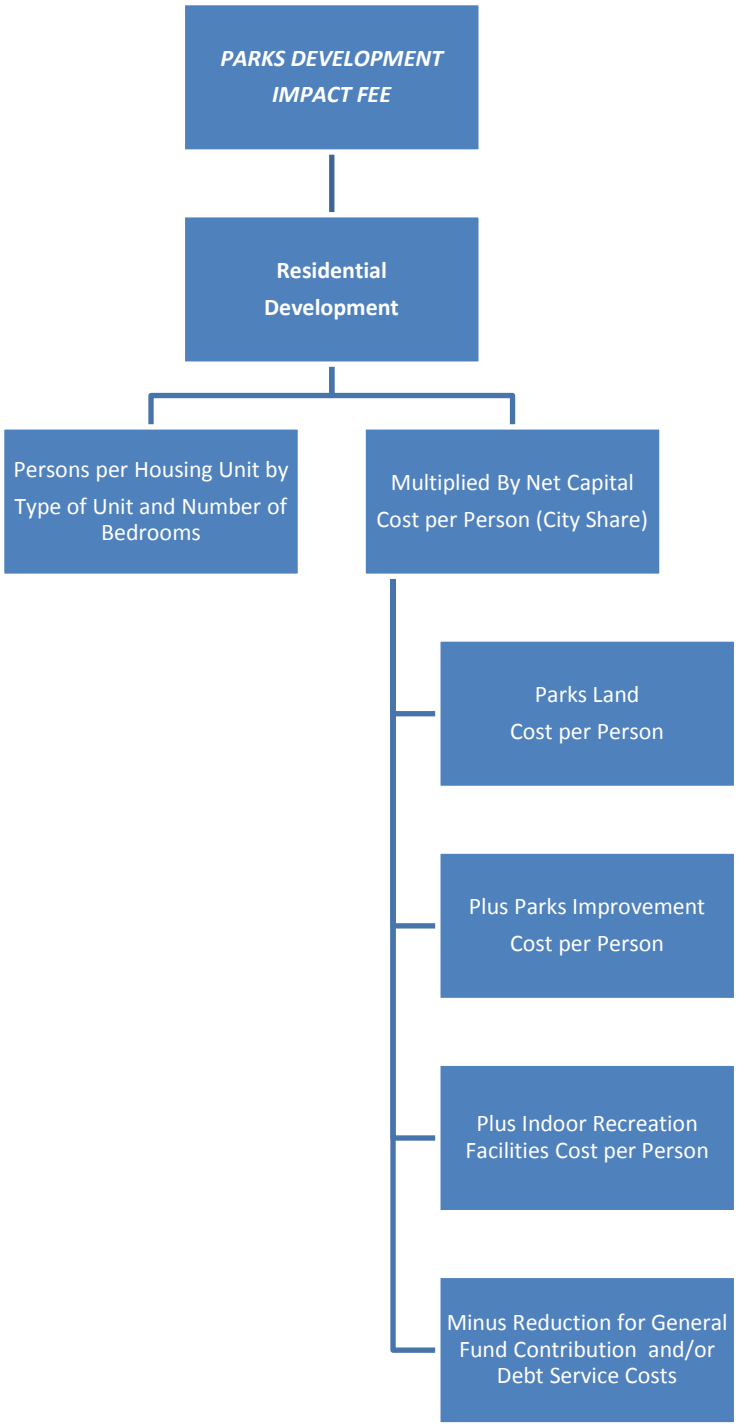

PARKS & RECREATION INFRASTRUCTURE STANDARDS AND COST FACTORS

Parks Land and Improvements

Park impact fees are based on an inventory of existing citywide Parks and current values of park improvements in the City of Sandpoint's park system. As required by Idaho Code 67-8204(2), levels of service are applicable to existing development as well as new growth and development. The use of existing or lower adopted standards means there are no existing infrastructure deficiencies. New development is only paying its proportionate share for growth-related infrastructure. Costs and acreages have been provided by City staff. For the City of Sandpoint's fees, levels of service are based on the **adopted** level of service for parks. The adopted level of service is *lower than the City's current level of service* (8 acres of developed park land per 1,000 compared to 10.7 acres per 1,000 persons).

As shown in Figure 17, the City has a total of 93.2 total acres of park land with 83.6 acres of developed acres and 9.6 acres of undeveloped parks in its system. This equates to a current level of service of 9.6 acres per 1,000 persons of developed parks and 1.1 acres per 1,000 persons of undeveloped acres. The City also has an adopted level of service as part of the *City of Sandpoint Parks Master Plan* set at 8 acres per 1,000 persons. Based on direction from the City, the impact fees take a conservative approach and are based on the adopted (lower) level of service. This level of service is used to determine future needs and costs for park development, which results in a lower level of infrastructure improvements needed thus accounting for excess capacity in the system and ensuring that new growth pays its pro rata share.

Further, it is assumed that future undeveloped park land is likely to come from means other than purchase such as developer contribution. Using the lower adopted level accounts for this likelihood.

Land and improvement costs reflect current replacement values. Amenity costs are from the City of Sandpoint and TischlerBise (and confirmed by City staff). Land costs are from recent purchases of property by the City of Sandpoint as well as an analysis by TischlerBise of County Assessor data for vacant and agricultural parcels of 5 to 20 acres in the City of Sandpoint. The total current value of land is approximately $2.8 million based on an estimated current purchase price of $30,000 per acre citywide. The inventory of improvements represents an investment with a current cost of approximately $8.6 million.

For the impact fee calculation, per person costs are as follows: adopted level of service is approximately $1,065 per person. Further detail is provided at the bottom of the following figure.

Figure 17. Parks Level of Service Standards and Cost Factors

	Park	Current City Classification	Developed Acreage	Undeveloped Acreage	TOTAL Acreage	Baseball Softball Fields	Football Soccer Fields	Multiuse Fields	Basketball Tennis Volleyball # of cts	Boating/ Fishing #	Buildings	Restrooms	Miscellaneous & Infras* (dev acres)	Playground Equipment	TOTAL Value Improvements
1	City Beach	Community Park	22.10		22.1				6.00	2.00	$250,000	$175,000	22.10	1.00	$1,960,000
2	3RD Avenue Pier	Neighborhood Park	0.26		0.3								0.26		$13,000
3	Hickory Street Park	Neighborhood Park	2.29		2.3						$11,500		2.29		$126,000
4	Lakeview Park	Neighborhood Park	12.00		12.0					1.00	$172,000	$60,000	12.00	1.00	$892,000
5	Cedars Park	Neighborhood Park		2.56	2.6								0.00		$0
6	Main Street Right of Way	Neighborhood Park		5.00	5.0								0.00		$0
7	Centennial Park	Special Use Area	7.3		7.3		2.00				$6,200		7.26		$619,200
8	Farmin Park	Special Use Area	0.3		0.3								0.28		$14,000
9	Great Northern Park	Special Use Area	7.2		7.2		2.00					$18,750	7.19		$628,250
10	Jeff Jones Town Square	Special Use Area	0.3		0.3							$160,000	0.30		$175,000
11	Old 9th Grade Center Field	Special Use Area	1.5		1.5			1.00					1.54		$107,000
12	Outdoor Shooting Range	Special Use Area	6.0		6.0						$40,000		6.00		$340,000
13	Pine Street Park	Special Use Area	1.9		1.9			1.00					1.93		$126,500
14	Travers Park	Special Use Area	17.8		17.8	4.00	1.00		4.00		$72,800	$93,000	17.80	1.00	$1,970,800
15	War Memorial Field	Special Use Area	4.6		4.6	1.00	1.00				$1,162,148		4.64		$1,644,148
16	Humbird Mill Park	Trailhead		2.0	2.0								0.00		$0
	Total Units		83.6	9.6	93.2										
						5.00	6.00	2.00	10.00	3.00	$1,714,648	$506,750	83.59	3.00	
	Current Value per Acre	$30,000	$30,000	Unit Price		$125,000	$125,000	$30,000	$60,000	$10,000			$50,000	$50,000	
	Subtotal Values	$2,507,700	$286,800	Value (Units x Price)		$625,000	$750,000	$60,000	$600,000	$30,000	$1,714,648	$506,750	$4,179,500	$150,000	
	TOTAL VALUES			***Land***	**$2,794,500**									***Improvements***	**$8,615,898**

* *Miscellaneous site improvements includes such items as parking, roads, picnic tables, benches, drinking fountains, signage and landscaping. Infrastructure includes such items as irrigation, electricity, water, lighting, drainage and earth work. Sports fields calculate irrigation cost into field cost.*

Cost per Developed Acre ***$103,073***

Level of Service Standards

Population in 2011	8,737	
	Current	***Adopted***
Developed Acres of Park Land Per 1,000 Residents	9.6	8.0
Undeveloped Acres of Park Land Per 1,000 Residents	1.1	0.0

				Cost per Person	
				CURRENT LOS	***ADOPTED LOS***
			City Share	***City Share***	***City Share***
			%	***$***	***$***
Developed Land Cost per Acre	$30,000	$30,000			
Undeveloped Land Cost per Acre	$30,000	$30,000			
Developed Park Land Cost Per Person	$287.02	$240.00	**100%**	**$287.02**	**$240.00**
Undeveloped Park Land Cost Per Person	$32.82	$0.00	**100%**	**$32.82**	**$0.00**
Average Improvement Cost Per Acre	*$103,073*	*$103,073*			
Developed Parks: Improvements Cost Per Person	$986.13	$824.58	**100%**	**$986.13**	**$824.58**
Undeveloped Parks: Improvements Cost Per Person	$0.00	$0.00	**100%**	**$0.00**	**$0.00**
TOTAL Cost Per Person (land + imps)	***$1,305.97***	***$1,064.58***		***$1,305.97***	***$1,064.58***

Source: City of Sandpoint

Recreation Facility

The recreation facility component of the Park and Recreation impact fee is based on the current and planned square footage and replacement value of the indoor recreational facility serving the City. As noted previously, Idaho Code 67-8204(2) requires that levels of service be applicable to existing development as well as new growth and development. The use of existing standards means there are neither existing infrastructure deficiencies nor surplus capacity in infrastructure. New development is only paying its proportionate share for growth-related infrastructure.

As shown in Figure 18, indoor recreational facility square footage in the City of Sandpoint totals 5,400. The current level of service is .62 square feet per person. The total value of the facility including land is estimated at $531,355, which results in a cost per capita of $60.81.

Figure 18. Indoor Recreation Facility Level of Service Standards and Cost Factors

Facility	*Square Footage*	*Current Replacement Cost/SF**	*Land Value*	*Cost*
Community Hall	5,400	$93	$31,355	$531,355
TOTAL	5,400	$98		$531,355

Population in 2011	8,737
Square Foot Per Capita	0.62
Cost per Capita	$60.81

** Cost estimate for Class D, Average, Community Recreation Center; Marshall & Swift Valuation Service*

Cost for Development Impact Fee Study

Included in the fee is the cost for preparation of the Parks and Recreation portion of the development impact fees as allowed by the Idaho Act. This is calculated based on the projected growth in Sandpoint population over the next five years, which represents the maximum period of time when the CIP and fees should be updated to reflect changes in development and levels of service. The cost per person of $21.63 is derived by dividing the consultant cost by the projected increase in population over five years. See Figure 19.

Figure 19. Development Fee Preparation Cost (Parks Portion)

		Residential
Proportionate Share		100.0%
Parks Consultant Fee	$14,610	$14,610
Increase in Population	5 years	675
Cost per Person		**$21.63**

CREDIT EVALUATION

The City does not have any outstanding debt for parks or recreation that will be retired through property taxes. In addition, the City plans to fund parks and recreation capacity improvements serving growth with impact fees and other non-General Fund sources. Included in the fee calculation is an examination of past funding for parks capacity improvements that were paid out of the General Fund. Based on an analysis from the past three years, we found that 0 percent of the General Fund is spent on parks and recreation capacity improvements. Therefore, no reduction to the gross capital cost is included.

PARKS AND RECREATION INPUT VARIABLES AND DEVELOPMENT IMPACT FEES

Infrastructure standards used to calculate park impact fees are shown in the top portion of Figure 20. For park impact fees, a "service unit" is a person. As specified in 67-8208(e), the variables shown in the table below are used to convert service units to development units.

Figure 20 summarizes service units, conversion factors, and cost factors per service unit for Parks development impact fees for the City of Sandpoint as detailed above. As indicated elsewhere, the impact fees are based on the City's adopted level of service for park land and improvements, which is reflected in the figure. The total capital cost per person is the sum of the individual cost factors at the top of the figure.

The Parks impact fee is the product of persons per housing unit multiplied by the total net capital cost per person. Fees are presented by size of single family housing unit based on household size by number of bedrooms (see Demographic analysis section of report for further detail). Each household size is multiplied by the net capital cost per person to derive the impact fee per unit. Also shown is a comparison with the City's current fees.

An example of the calculation for an average size single family detached unit is: the net capital cost per person ($1,147.02) multiplied by the persons per housing unit for that size unit (2.19) to arrive at

the development impact fee per average single family unit of $2,510. This reflects a $451.53 increase from the existing fee.

Figure 20. Parks and Recreation Input Variables and Maximum Allowable Impact Fees by Type and Size of Housing Unit

Parks and Recreation Level Of Service and Infrastructure Costs per Person		*Per Person**
Developed Parks: Land Cost Per Person		$240.00
Undeveloped Parks: Land Cost Per Person		$0.00
Developed Parks: Improvements Cost Per Person		$824.58
Undeveloped Parks: Improvements Cost Per Person		$0.00
Recreation Facility Cost		$60.81
Consultant Cost		$21.63
GROSS COST PER PERSON		*$1,147.02*
General Fund Reduction	*0%*	$0
Debt Service Credit		$0
NET CAPITAL COST		***$1,147.02***

** Adopted level of service*

Parks and Recreation Impact Fee Schedule

Residential			*Impact Fee per Housing Unit*		
Unit Type	*Number of Bedrooms*	*Persons per Housing Unit*	*Proposed Fee*	*Current Fee*	*Increase (Decrease)*
Multifamily/Other	All Sizes	2.12	$2,437.00	$2,058.47	$378.53
Single Family	0-3	1.97	$2,256.00	$2,058.47	$197.53
Single Family	4+	2.95	$3,378.00	$2,058.47	$1,319.53
Single Family	*Avg*	*2.19*	*$2,510.00*	$2,058.47	*$451.53*

SERVICE AREA

The development fees calculated are for the infrastructure needed by the City of Sandpoint. Therefore, the service area is the City of Sandpoint. Fees should be collected from development in Sandpoint and spent on parks and recreation improvements to serve this growth.

CASH FLOW PROJECTIONS

This section summarizes the potential cash flow to the City of Sandpoint, if the Parks development fee is implemented at the maximum allowable amounts. The cash flow projections are based on the

assumptions detailed in this study and provide an indication of the impact fee revenue and capital expenditures necessary to meet the demand for new parks and recreation facilities brought about by new development. To the extent the rate of development either accelerates or slows down, there will be a corresponding change in impact fee revenue and capital costs. The development projections on which the cash flow summary is based can be found in the Appendix to this report.

Figure 21 provides a summary of the projected five-year cash flow from the Parks and Recreation impact fee and associated capital costs. Impact fees are projected to generate an average of $155,000 per year if the fee is implemented at the maximum allowable level, for a five-year total of almost $775,000. Costs shown are incremental costs to serve new development. Projected fee revenue is anticipated to cover 100 percent of the total estimated parks capital costs.

Figure 21. Cash Flow Summary for Parks

(Current $ in thousands)	1 2012	2 2013	3 2014	4 2015	5 2016	*5-Year Average Annual*	*5-Year Cumulative Total*
REVENUES							
PARKS							
1 Parks Fee - SFD	$100	$101	$103	$105	$106	$103	$515
2 Parks Fee - Multifamily/Other Res	$50	$51	$52	$53	$53	$52	$260
Subtotal Parks Fees	$150	$153	$155	$157	$160	*$155*	*$775*
CAPITAL COSTS							
PARKS							
Park Land	$31	$32	$32	$33	$33	$32	$162
Park Improvements	$108	$110	$111	$113	$115	$111	$557
Recreation Facilities	$8	$8	$8	$8	$8	$8	$41
Consultant Cost	$3	$3	$3	$3	$3	$3	$15
Subtotal Parks Costs	$150	$153	$155	$157	$160	*$155*	*$775*
NET CAPITAL FACILITIES CASH FLOW - *PARKS*						*Current $ in thousands*	
Annual Surplus (or Deficit)	$0	$0	$0	$0	$0	$0	
Cumulative Surplus (or Deficit)	$0	$0	$0	$0	$0		$0

POLICE DEVELOPMENT IMPACT FEES

The Police development impact fee includes two components: Police Station and Communications Infrastructure. An incremental expansion approach is used for both components. Per the Idaho Act, capital improvements are limited to those improvements that have useful lives of ten or more years, therefore Police cars and other vehicles cannot be included.

Costs are allocated to both residential and nonresidential development using different demand indicators for each type of development. Residential development impact fees are calculated on a per capita basis and then converted to an appropriate amount for each type of housing based on household size. For nonresidential development, TischlerBise recommends using nonresidential vehicle trips as the best demand indicator for Police facilities. Trip generation rates are highest for commercial developments, such as shopping centers, and lowest for industrial/warehouse development. Office/institutional trip rates fall between the other two categories. This ranking of trip rates is consistent with the relative demand for Police services from nonresidential development.

Figure 22 diagrams the general methodology used to calculate the Police impact fee. It is intended to read like an outline, with lower levels providing a more detailed breakdown of the impact fee components. The residential portion of the Police fee is derived from the product of persons per housing unit (by type of unit) multiplied by the net capital cost per person. The nonresidential portion is derived from the product of nonresidential vehicle trips per 1,000 square feet of nonresidential space multiplied by the net capital cost per trip. The boxes in the next level down indicate detail on the components included in the fee.

Figure 22. Police Fee Methodology Chart

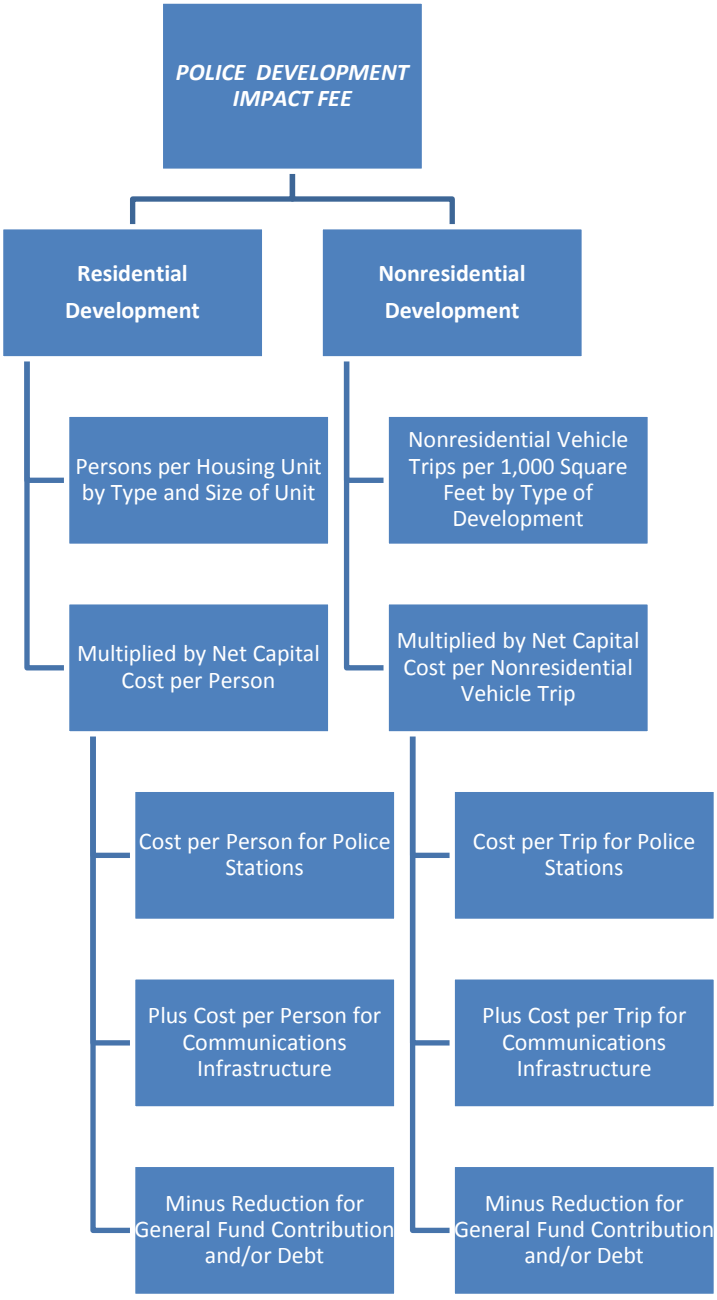

COST ALLOCATION FOR POLICE INFRASTRUCTURE

Proportionate share factors are used to allocate demand for facilities to residential and nonresidential development. To allocate costs, the City of Sandpoint Police Department provided calls for service data by Police District in an effort to determine whether calls for service were to residential or nonresidential development. However, because each geographic Police District has a mix of land uses and the Police Department does not currently track addresses for each call for service, TischlerBise recommends using a proportionate share allocation based on a functional population approach. Figure 23 indicates that 78 percent of demand is from residential development and 22 percent from nonresidential.

Figure 23. City of Sandpoint Police Proportionate Share Factors

	Demand Units in 2009		Demand Hours/Day	Person Hours	Proportionate Share
Residential					
Estimated Residents	8,615				
Residents Not Working		4,525	24	108,612	
Workers Living in City	4,090				
City Residents Working in City		1,772	16	28,352	
City Residents Working outside of City		2,318	16	37,088	
		Residential Subtotal		174,052	**78%**
Nonresidential					
Jobs Located in City	6,055				
City Residents Working in City		1,772	8	14,176	
Non-Resident Workers		4,283	8	34,264	
		Nonresidential Subtotal		48,440	**22%**
			TOTAL	222,492	**100%**

Source: US Census, OnTheMap Application and LEHD Origin-Destination Employment Statistics

The allocation to residential and nonresidential development can then be applied to calls for service (CFS) data to derive CFS per capita and CFS per nonresidential trip. See Figure 24.

Figure 24. City of Sandpoint Police Cost Allocation and Levels of Service

	2010			
Total Calls for Service*	6,083			
	Proportionate Share	*Estimated Calls for Service (CFS)*	*Service Units*	*CFS per Service Unit*
Residential	*78%*	4,759	8,737 Population	0.54
Nonresidential	*22%*	1,324	31,329 Nonres Vehicle Trips	0.04

** Calendar year calls for service and felonies*
Source: City of Sandpoint Police Department

POLICE INFRASTRUCTURE STANDARDS AND LEVELS OF SERVICE

The section below summarizes the methodologies and levels of service on which the development impact fees are based.

The City currently has a Police Station with 5,394 square feet. The current facility is at capacity per the City Police Department. To maintain current levels of service, new development in the City will require additional capacity to accommodate increased Police demand. The Police Department has indicated a need for additional space for evidence and records storage. Figure 25 details the City's current level of service and costs for Police station space.

Figure 25. Police Station Level of Service Standard and Cost Factors

Facility	*Square Feet*	*$/SF**	*Total Cost**
Police Station	5,394	$145	$782,130
Total	5,394	$145	$782,130

	Proportionate Share	*2011 Demand Units*	*Cost per Demand Unit*
Residential	78%	8,737 Population	$70.02
Nonresidential	22%	31,329 Nonres Vehicle Trips	$5.43

SF per Person	*0.48*
SF per Nonres Trip	*0.04*

** Marshall & Swift Valuation Service (Class D, Good)*
Source: City of Sandpoint

Communications Infrastructure

Level of service standards and cost factors for Police Communications Infrastructure are shown in Figure 26. The City of Sandpoint Police Department is developing a wireless communications infrastructure system throughout the City, which includes voice (land mobile radio "LMR"), data, and capabilities to allow for effective interoperable communications by officers in the field responding to requests for service. The City has developed a portion of the backbone of the system and is currently building out the remainder of the system. The Police Department estimates that the cost of building out the complete wireless communications system (data and LMR) at $800,000 to $900,000. The *current* value of the system (including LMR infrastructure and data) is estimated at almost $240,000, reflecting recent expenditures from FY 2007-08 to FY 2011-12 as well as prior investments. The current value of the system is used to derive the current level of service, which is $21.13 per person and $1.64 per nonresidential vehicle trip. New growth will pay its pro rata share of the planned costs according to the current levels of service as documented below. Figure 26 shows the costs and levels of service for residential and nonresidential development.

Figure 26. Police Communications Infrastructure Level of Service Standards and Cost Factor

Facility	*Current Value of System*
Wireless Network Communications Infra. (includes data & voice (land mobile radio (LMR))	$239,538

	Proportionate Share	*2012 Demand Units*	*Cost per Demand Unit*
Residential	78%	8,868 Population	$21.13
Nonresidential	22%	31,784 Nonres Vehicle Trips	$1.64

Source: City of Sandpoint

Cost for Development Impact Fee Study

Included in the fee is the cost for preparation of the Police portion of the development impact fees as allowed by the Idaho Act. This is calculated based on the projected growth in Sandpoint population and nonresidential development over the next five years, which represents the maximum period of time when the CIP should be updated to reflect changes in development and levels of service. The cost per person of $10.15 and the cost per nonresidential trip of $0.81 is derived by multiplying the consultant cost for preparing the development impact fees by the respective proportionate share

then dividing by either the projected increase in population or increase in nonresidential trips over three years. See Figure 27.

Figure 27. Development Fee Preparation Cost (Police Portion)

		Residential	*Nonresidential*
Service Unit		Person	Vehicle Trip
Proportionate Share		78%	22%
Public Safety Consultant Fee	$8,766	$6,858	$1,908
Increase in Service Units	5 years	675	2,338
Cost per Service Unit		**$10.15**	**$0.81**

CREDIT EVALUATION

The City does not have any current outstanding debt for Police capital improvements that will be retired through property taxes. Included in the fee calculation is an examination of past funding for police capacity improvements that were paid out of the General Fund as required by Idaho impact few law. Based on an analysis from the past three years, we found that 0.4 percent of the General Fund has been spent on police capacity improvements. Therefore, a credit is included.

POLICE INPUT VARIABLES AND DEVELOPMENT IMPACT FEES

For Police infrastructure, a "service unit" for residential development is a person and for nonresidential development, it is a vehicle trip. As specified in 67-8208(e), the variables shown in the table below are used to convert service units to development units.

Level of service standards for the Police development impact fees are shown in Figure 28. Development impact fees are based on persons per housing unit by type and size for the residential fee and vehicle trip ends per 1,000 square feet for nonresidential development. Average weekday vehicle trip ends are from the reference book, *Trip Generation (Seventh Edition, 2008)*, published by the Institute of Transportation Engineers (ITE). A vehicle trip end represents a vehicle either entering or exiting a development (as if a traffic counter were placed across a driveway). To calculate impact fees, trip generation rates are adjusted to avoid double counting each trip at both the origin and destination points—thereby allocating the trip to the appropriate land use.

The basic trip adjustment factor is 50 percent for all nonresidential development except commercial. For commercial/shopping center development, the trip adjustment factor is less than 50 percent because retail uses attract vehicles as they pass by on arterial and collector roads. For example, when

someone stops at a convenience store on the way home from work, the convenience store is not the primary destination. For an average size shopping center, the ITE manual indicates that on average 25 percent of the vehicles that enter are passing by on their way to some other primary destination. The remaining 75 percent of attraction trips have the shopping center as their primary destination. Because attraction trips are half of all trips, the trip adjustment factor is 75 percent multiplied by 50 percent, or approximately 38 percent of the trip ends. (See the Appendix for further discussion.)

Figure 28 summarizes service units, conversion factors, and cost factors per service unit for the Police development impact fees as detailed above.

Maximum allowable Police development impact fees by land use type are also shown below in Figure 28. Residential fees are per housing unit and nonresidential fees are per gross square foot of floor area. The fees are calculated by multiplying the service units per land use type by the net capital cost per service unit.

An example of the calculation for an average size single family detached unit is: the net capital cost per person ($100.86) multiplied by the persons per housing unit for that size unit (2.19) to arrive at the development impact fee per average single family unit of $220. This reflects a $62.92 decrease from the existing fee. For nonresidential land uses, the trip rate for the respective type of use is multiplied by the trip adjustment factor and then multiplied by the impact fee per trip. For example, the impact fee for a shopping center is calculated as follows: 42.94 x 38% x $7.85 to yield an impact fee amount of $.13 per square foot.

Figure 28. Police Input Variables and Maximum Allowable Impact Fees by Land Use

Residential

		Per Person
Police Facilities Capital Cost		$70.02
Communications Infrastructure		$21.13
Consultant Cost		$10.15
GROSS CAPITAL COST		*$101.30*
General Fund Reduction	*0.4%*	($0.44)
Debt Service Credit		$0.00
NET CAPITAL COST		***$100.86***

Residential Impact Fees per Housing Unit			**Impact Fee per Housing Unit**		
Unit Type	***Number of Bedrooms***	***Persons per Housing Unit***	***Proposed Fee***	***Current Fee***	***Increase (Decrease)***
Multifamily/Other	All Sizes	2.12	$214.00	$282.92	($68.92)
Single Family	0-3	1.97	$198.00	$282.92	($84.92)
Single Family	4+	2.95	$297.00	$282.92	$14.08
Single Family	*Avg*	*2.19*	*$220.00*	$282.92	*($62.92)*

Nonresidential

		Per Nonres Trip
Police Facilities Capital Cost		$5.43
Communications Infrastructure		$1.64
Consultant Cost		$0.81
GROSS CAPITAL COST		*$7.88*
General Fund Reduction	*0.4%*	($0.03)
Debt Service Credit		$0.00
NET CAPITAL COST		***$7.85***

			Impact Fee per Square Foot of Floor Area		
	Weekday Vehicle Trip Ends	***Trip Rate Adj. Factors***	***Proposed Fee***	***Current Fee***	***Increase (Decrease)***
Nonresidential Development Fee	*(Per 1,000 sq. ft.)*		*(Per Square Foot of Floor Area)*		
820 Commercial / Shpg Ctr Average	42.94	38%	$0.13	$0.08	$0.05
710 Office	11.01	50%	$0.04	$0.08	($0.04)
151 Mini-Warehouse	2.50	50%	$0.01	$0.08	($0.07)
150 Warehousing	3.56	50%	$0.01	$0.08	($0.07)
140 Manufacturing	3.82	50%	$0.01	$0.08	($0.07)
110 Light Industrial	6.97	50%	$0.03	$0.08	($0.05)

SERVICE AREA

Given the nature of Police services and the existence of one station with future capacity expansions serving the entire City, it is recommended that one impact fee service area be used for the Police impact fee.

CASH FLOW PROJECTIONS

This section summarizes the potential cash flow to the City of Sandpoint, if the Police development fees are implemented at the maximum allowable amounts. The cash flow projections are based on the assumptions detailed in this study and provide an indication of the impact fee revenue and capital expenditures necessary to meet the demand for police facilities brought about by new development. To the extent the rate of development either accelerates or slows down, there will be a corresponding change in impact fee revenue and capital costs. The development projections on which the cash flow summary is based can be found in the Appendix to this report.

Figure 29 provides a summary of the projected five-year cash flow from the Police impact fee and associated capital costs. Impact fee revenues are projected to generate an average of $17,000 per year if the fee is implemented at the maximum allowable level, for a five-year total of approximately $86,000. Five-year Police capital costs to serve growth are projected at approximately $87,000. Projected fee revenue covers approximately 99 percent of the capital costs.

Figure 29. Cash Flow Summary for Police

(Current $ in thousands)	1 2012	2 2013	3 2014	4 2015	5 2016	*5-Year Average Annual*	*5-Year Cumulative Total*
REVENUES							
POLICE							
3 Police Fee - SFD	$9	$9	$9	$9	$9	$9	$45
4 Police Fee - Multifamily/Other Res	$4	$4	$5	$5	$5	$5	$23
5 Police Fee - Commercial	$2	$2	$2	$2	$2	$2	$8
6 Police Fee - Office/Instit	$1	$1	$2	$2	$2	$2	$8
7 Police Fee - Industrial	$0	$0	$1	$1	$1	$1	$3
Subtotal Police Fees	$17	$17	$17	$18	$18	*$17*	*$86*
CAPITAL COSTS							
POLICE							
Police Facilities	$12	$12	$12	$12	$12	$12	$60
Communications Infrastructure	$4	$4	$4	$4	$4	$4	$18
Consultant Cost	$2	$2	$2	$2	$2	$2	$9
Subtotal Police Costs	$17	$17	$17	$18	$18	*$17*	*$87*
NET CAPITAL FACILITIES CASH FLOW- *POLICE*						*Current $ in thousands*	
Annual Surplus (or Deficit)	($0)	($0)	($0)	($0)	($0)	($0)	
Cumulative Surplus (or Deficit)	($0)	($0)	($0)	($0)	($1)		($1)

FIRE DEVELOPMENT IMPACT FEES

The Fire development impact fee includes two components: Fire Stations and Apparatus/Major Equipment. An incremental expansion methodology is used for both components. Per the Idaho Act, capital improvements are limited to those improvements that have useful lives of ten or more years, therefore major apparatus is included but cars and other vehicles are not.

Costs are allocated to both residential and nonresidential development using different demand indicators for each type of development. Residential development impact fees are calculated on a per capita basis and then converted to an appropriate amount for each type of housing based on household size. For nonresidential development, TischlerBise recommends using nonresidential vehicle trips as the best demand indicator for Fire facilities. Trip generation rates are highest for commercial developments, such as shopping centers, and lowest for industrial/warehouse development. Office/institutional trip rates fall between the other two categories. This ranking of trip rates is consistent with the relative demand for Fire services from nonresidential development.

Figure 22 diagrams the general methodology used to calculate the Fire impact fee. It is intended to read like an outline, with lower levels providing a more detailed breakdown of the impact fee components. The residential portion of the Fire fee is derived from the product of persons per housing unit (by type of unit) multiplied by the net capital cost per person. The nonresidential portion is derived from the product of nonresidential vehicle trips per 1,000 square feet of nonresidential space multiplied by the net capital cost per trip. The boxes in the next level down indicate detail on the components included in the fee.

Figure 30. Fire Fee Methodology Chart

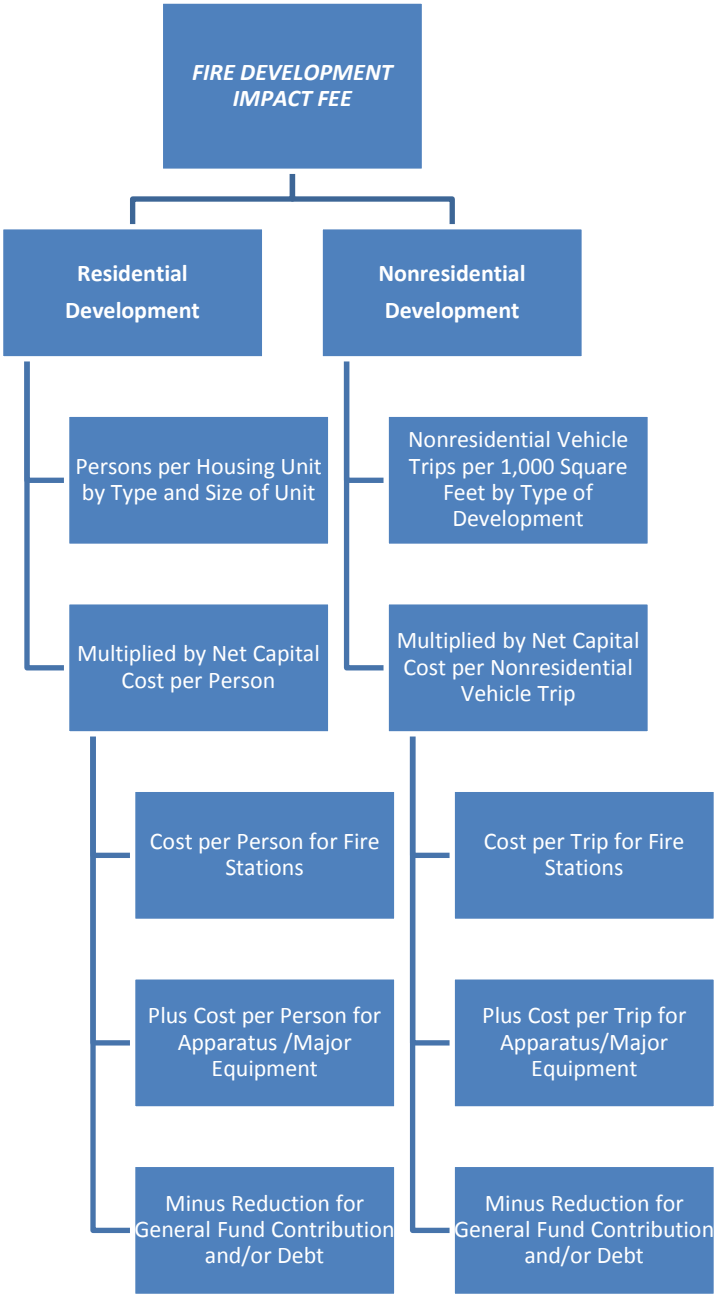

COST ALLOCATION FOR FIRE INFRASTRUCTURE

Proportionate share factors are used to allocate demand for facilities to residential and nonresidential development. To allocate costs, the City of Sandpoint Fire Department provided calls

for service data by type of land use. The calls for service data were from three years 2008, 2009, and 2010 and reflect Fire/EMS calls since the Fire Department is a first responder to EMS calls. As shown in Figure 31, of a 3-year total of 1,319 calls for service to known types of development, 56 percent were to residential development and 44 percent were to nonresidential development.

Outside/street incidents were allocated according to the estimated number of vehicle trips associated with development within the City of Sandpoint. (A detailed discussion of trip generation rates and vehicle trip calculations is provided in the Transportation chapter and Appendix of this report.)

Figure 31. City of Sandpoint Fire Proportionate Share Factors

		2008-2010 Fire/EMS City of Sandpoint Calls for Service	
Residential		712	
Outside/Streets	*35%*	21	
Residential Subtotal		*733*	*56%*
Nonresidential		547	
Outside/Streets	*65%*	39	
Nonresidential Subtotal		*586*	*44%*
Development Total		*1,319*	*100%*
Unknown/Not Reported		61	
Grand Total		**1,380**	

Source: City of Sandpoint Fire Department

FIRE INFRASTRUCTURE STANDARDS AND LEVELS OF SERVICE

The section below summarizes the methodologies and levels of service on which the development impact fees are based.

The City currently has a Fire Station with 4,656 square feet and an Apparatus Bay with 5,454 square feet. To maintain current levels of service, new development in the City will require additional station and apparatus storage capacity to accommodate increased Fire demand for services. Additional capacity is likely to be needed in the northern/airport area of the City, which will augment the current system by alleviating pressure on the existing station and adding secondary response

capabilities. Figure 32 details the City's current level of service and costs for Fire station and apparatus bay space. The total replacement cost of existing space totals $1.36 million, which is allocated to residential and nonresidential development using proportionate share factors to derive a per person and per trip cost. An example of the formula is: ($1,358,196 x 56%) / 8,737 = $86.35 per person.

Figure 32. Fire Station Level of Service Standards and Cost Factors

Facility	*Square Ft*	*$/SF*	*Total Cost*
Fire Station Office and Dorm	4,656	$116	$540,096
Fire Station Apparatus Bay	5,454	$150	$818,100
Total	10,110	$134	$1,358,196

	Proportionate Share	*2011 Demand Units*	*Cost per Demand Unit*
Residential	56%	8,737 Population	$86.35
Nonresidential	44%	31,329 Nonres Vehicle Trips	$19.27

SF per Person	*0.64*
SF per Nonres Trip	*0.14*

Source: City of Sandpoint

Apparatus and Major Equipment

Level of service standards and cost factors for Fire Apparatus and Major Equipment are shown in Figure 33. Future growth in the City will require an expansion of the department's fleet and communications infrastructure to serve new development to maintain current levels of service. An incremental expansion approach is used to determine current levels of service and the costs to serve growth to maintain this level of service. The current value of Fire apparatus and major equipment is $2.6 million, including the current communications system with a replacement value of $400,000. This results in a per person cost of $165.62 and a per trip cost of $36.96.

Figure 33. Fire Apparatus Level of Service Standards and Cost Factors

Type of Vehicle/Equipment	*Units in Service*	*Unit Price*	*Replacement Cost*
Engines	3	$400,000	$1,200,000
Aerial Truck	1	$720,000	$720,000
Rescues	1	$150,000	$150,000
SCBA Equipment	1	$135,000	$135,000
Communications System		$400,000	$400,000
Total	6	$434,167	$2,605,000

	Proportionate Share	*2011 Demand Units*		*Cost per Demand Unit*
Residential	56%	8,737	Population	$165.62
Nonresidential	44%	31,329	Nonres Vehicle Trips	$36.96

Units per 1,000 Persons	*0.38*
Units Per 1,000 Nonres Trips	*0.09*

Source: City of Sandpoint

Cost for Development Impact Fee Study

Included in the fee is the cost for preparation of the Fire portion of the development impact fees as allowed by the Idaho Act. This is calculated based on the projected growth in Sandpoint population and nonresidential development over the next five years, which represents the maximum period of time when the CIP should be updated to reflect changes in development and levels of service. The cost per person of $7.21 and the cost per nonresidential trip of $1.66 is derived by multiplying the consultant cost for preparing the development impact fees by the respective proportionate share then dividing by either the projected increase in population or increase in nonresidential trips over three years. See Figure 27.

Figure 34. Development Fee Preparation Cost (Fire Portion)

		Residential	*Nonresidential*
Service Unit		Person	Vehicle Trip
Proportionate Share		56%	44%
Fire Consultant Fee	$8,766	$4,869	$3,897
Increase in Service Units	5 yrs	675	2,338
Cost per Service Unit		**$7.21**	**$1.66**

CREDIT EVALUATION

The City does not have any current outstanding debt for Fire capital improvements that will be retired through property taxes. Included in the fee calculation is an examination of past funding for fire capacity improvements that were paid out of the General Fund as required by Idaho impact few law. Based on an analysis from the past three years, we found that 0 percent of the General Fund has been spent on fire capacity improvements. Therefore, no credit is necessary.

FIRE INPUT VARIABLES AND DEVELOPMENT IMPACT FEES

For Fire infrastructure, a "service unit" for residential development is a person and for nonresidential development, it is a vehicle trip. As specified in 67-8208(e), the variables shown in the table below are used to convert service units to development units.

Level of service standards for the Fire development impact fees are shown in Figure 28. Development impact fees are based on persons per housing unit by type and size for the residential fee and vehicle trip ends per 1,000 square feet for nonresidential development. Average weekday vehicle trip ends are from the reference book, *Trip Generation (Seventh Edition, 2008)*, published by the Institute of Transportation Engineers (ITE). A vehicle trip end represents a vehicle either entering or exiting a development (as if a traffic counter were placed across a driveway). To calculate impact fees, trip generation rates are adjusted to avoid double counting each trip at both the origin and destination points—thereby allocating the trip to the appropriate land use.

The basic trip adjustment factor is 50 percent for all nonresidential development except commercial. For commercial/shopping center development, the trip adjustment factor is less than 50 percent because retail uses attract vehicles as they pass by on arterial and collector roads. For example, when someone stops at a convenience store on the way home from work, the convenience store is not the primary destination. For an average size shopping center, the ITE manual indicates that on average 25 percent of the vehicles that enter are passing by on their way to some other primary destination. The remaining 75 percent of attraction trips have the shopping center as their primary destination. Because attraction trips are half of all trips, the trip adjustment factor is 75 percent multiplied by 50 percent, or approximately 38 percent of the trip ends. (See the Appendix for further discussion.)

Figure 28 summarizes service units, conversion factors, and cost factors per service unit for the Fire development impact fees as detailed above.

Maximum allowable Fire development impact fees by land use type are also shown below in Figure 28. Residential fees are per housing unit and nonresidential fees are per gross square foot of floor area. The fees are calculated by multiplying the service units per land use type by the net capital cost per service unit.

An example of the calculation for an average size single family detached unit is: the net capital cost per person ($259.81) multiplied by the persons per housing unit for that size unit (2.19) to arrive at the development impact fee per average single family unit of $567. This reflects a $93.46 increase from the existing fee. For nonresidential land uses, the trip rate for the respective type of use is multiplied by the trip adjustment factor and then multiplied by the impact fee per trip. For example, the impact fee for a shopping center is calculated as follows: 42.94 x 38% x $57.89 to yield an impact fee amount of $.94 per square foot.

Figure 35. Fire Input Variables and Maximum Allowable Impact Fees by Land Use

Residential

	Per Person
Fire & Rescue Facilities Capital Cost	$86.35
Fire & Rescue Apparatus/Equipment Capital Cost	$165.62
Consultant Cost	$7.21
GROSS CAPITAL COST	**$259.18**
General Fund Reduction	0% $0.00
Debt Service Credit	$0.00
NET CAPITAL COST	***$259.18***

Residential Impact Fees per Housing Unit

			Impact Fee per Housing Unit		
Unit Type	*Number of Bedrooms*	*Persons per Housing Unit*	*Proposed Fee*	*Current Fee*	*Increase (Decrease)*
Multifamily/Other	All Sizes	2.12	$550.00	$473.54	$76.46
Single Family	0-3	1.97	$509.00	$473.54	$35.46
Single Family	4+	2.95	$763.00	$473.54	$289.46
Single Family	*Avg*	*2.19*	*$567.00*	$473.54	*$93.46*

Nonresidential

	Per Nonres Trip
Fire & Rescue Facilities Capital Cost	$19.27
Fire & Rescue Apparatus/Equipment Capital Cost	$36.96
Consultant Cost	$1.66
GROSS CAPITAL COST	*$57.89*
General Fund Reduction	0% $0.00
Debt Service Credit	$0.00
NET CAPITAL COST	***$57.89***

			Impact Fee per Square Foot of Floor Area		
	Weekday Vehicle Trip Ends	*Trip Rate Adj. Factors*	*Proposed Fee*	*Current Fee*	*Increase (Decrease)*
Nonresidential Development Fee	*(Per 1,000 sq. ft.)*		*(Per Square Foot of Floor Area)*		
820 Commercial / Shpg Ctr Average	42.94	38%	$0.94	$0.13	$0.81
710 Office	11.01	50%	$0.32	$0.13	$0.18
151 Mini-Warehouse	2.50	50%	$0.07	$0.13	($0.06)
150 Warehousing	3.56	50%	$0.10	$0.13	($0.03)
140 Manufacturing	3.82	50%	$0.11	$0.13	($0.02)
110 Light Industrial	6.97	50%	$0.20	$0.13	$0.07

SERVICE AREA

Given the nature of Fire services with one station serving the City currently and future capacity expansions also serving the entire City, it is recommended that one service area be used for the Fire impact fee.

CASH FLOW PROJECTIONS

This section summarizes the potential cash flow to the City of Sandpoint, if the Fire development fees are implemented at the maximum allowable amounts. The cash flow projections are based on the assumptions detailed in this study and provide an indication of the impact fee revenue and capital expenditures necessary to meet the demand for fire and rescue facilities and apparatus brought about by new development. To the extent the rate of development either accelerates or slows down, there will be a corresponding change in impact fee revenue and capital costs. The development projections on which the cash flow summary is based can be found in the Appendix to this report.

Figure 29 provides a summary of the projected five-year cash flow from the Fire impact fee and associated capital costs. Impact fee revenues are projected to generate an average of $62,000 per year if the fee is implemented at the maximum allowable level, for a five-year total of approximately $310,000. Five-year Fire capital costs to serve growth are projected at approximately $310,000. Projected fee revenue covers approximately 100 percent of the capital costs.

Figure 36. Cash Flow Summary for Fire

(Current $ in thousands)	1 2012	2 2013	3 2014	4 2015	5 2016	*5-Year Average Annual*	*5-Year Cumulative Total*
REVENUES							
FIRE							
8 Fire Fee - SFD	$23	$23	$23	$24	$24	$23	$116
9 Fire Fee - Multifamily/Other Res	$11	$12	$12	$12	$12	$12	$59
10 Fire Fee - Commercial	$12	$12	$12	$12	$13	$12	$61
11 Fire Fee - Office/Instit	$11	$11	$11	$11	$11	$11	$56
12 Fire Fee - Industrial	$4	$4	$4	$4	$4	$4	$19
Subtotal Fire Fees	$60	$61	$62	$63	$64	*$62*	*$310*
CAPITAL COSTS							
FIRE							
Fire Stations	$20	$20	$21	$21	$21	$21	$103
Fire Apparatus/Major Equipment	$38	$39	$40	$40	$41	$40	$198
Consultant Cost	$2	$2	$2	$2	$2	$2	$9
Subtotal Fire Costs	$60	$61	$62	$63	$64	*$62*	*$310*
NET CAPITAL FACILITIES CASH FLOW- *FIRE*						*Current $ in thousands*	
Annual Surplus (or Deficit)	($0)	($0)	($0)	($0)	($0)	($0)	
Cumulative Surplus (or Deficit)	($0)	($0)	($0)	($0)	($0)		($0)

TRANSPORTATION DEVELOPMENT IMPACT FEES

INTRODUCTION

Reasonably allocating the cost of transportation system improvements requires consideration of several transportation planning challenges. Because road networks are "open" systems, newly expanded capacity can be readily absorbed by driver adaptations. For example, drivers may change their route of travel, departure times and even mode (i.e., automobile, bicycle, walking, or transit) to take advantage of road improvements.

Vehicular travel within a jurisdiction requires a system of controlled access roads, major and minor arterials, collectors, major access roads, and local streets. However, road impact fees typically are based on a subset of the system reflecting roads to be funded in whole or part by the locality as opposed to other sources (e.g., federal, state, private) as well as other considerations discussed below.

For local governments, one of the first steps in evaluating funding options for transportation improvements is to determine the basic rules of the game established by the state constitution and statutes. Some states are "home rule" states that grant localities all powers that are not precluded or preempted by the state constitution or statutes. In contrast, other states have more conservative legal parameters that basically restrict local government to specifically authorized actions.

The second step in evaluating funding options for transportation improvements is to consider the rational nexus and proportionality tests established by court cases. To clarify the question of who pays for what, it is useful to distinguish between *project-level* improvements and *system* improvements (i.e., infrastructure that benefits multiple development projects and typically located off-site). The need for project-level improvements may be addressed through development exactions that remain roughly proportional to the specific project. Project-level improvements are typically specified in a development agreement or similar instrument and should be distinguished from the need for system improvements, determined by legislatively adopted standards. Because system improvements are larger and more costly, they typically require funding from multiple development projects and/or broad-based revenues.

Functional Classification

Considering the functional classification of road improvements can provide guidance to local government decision makers when wrestling with nexus and proportionality tests. In general, *local streets* are regarded as project-level improvements and *arterials* are typically considered system improvements. Local governments may determine *collector* streets to be either project or system improvements. Common characteristics for different functional classifications of roads are discussed below.

Local Streets

Local streets are the smallest and least expensive improvements, designed to accommodate slow-moving traffic and providing access to adjacent properties. Most local governments require local street construction by the private sector. Capital costs for project-level improvements are typically passed along to homebuyers and renters that occupy new development.

Collectors

Collector streets are generally the "mid-range" improvements that fall between local and arterial streets. If a local government defines collector streets to be "system improvements" they are eligible for road impact fee funding. If collector streets are deemed to serve more limited service areas, nexus considerations may lead to the establishment of zones to track collection and expenditure of fees. In the City of Sandpoint, some collector streets are considered system improvements as they provide alternative routes that provide relief to major arteries.

Arterials

Arterial streets are the largest and typically the most expensive improvements, designed to handle fast-moving traffic making longer distance trips, thus requiring restricted access to adjacent properties. Because arterials function as trunk lines, moving vehicles into, out of, and across urban areas, they frequently have jurisdiction-wide funding sources including impact fees. Also, the major expenditures for arterial road construction usually require funding from several revenue sources.

A summary of the existing lane miles in the City of Sandpoint street system is provided below.

Figure 37. Current System Level (Arterials and Collectors) Lane Miles in the City of Sandpoint

Principal Arterial	11.38
Minor Arterial	12.78
Collector	17.39
	41.55

Source: David Evans and Associates

OVERVIEW OF THE CITY OF SANDPOINT TRANSPORTATION IMPACT FEES

The City of Sandpoint development impact fee for transportation infrastructure addresses the need for circulation improvements as identified in the *Urban Area Transportation Plan*.[1] Improvements are on arterials and collectors and include widenings, adding lanes, realignments, intersection improvements, and installation of traffic signals and roundabouts. All improvements will provide additional capacity and are needed to serve new development. A second component for Multi-use Pathways is included as well as part of the transportation fee and is discussed separately.

Transportation development impact fees are derived using a plan-based methodology. As shown in Figure 38, Transportation impact fees are calculated for both residential and nonresidential development by multiplying trip generation rates (demand factors) by the capital cost per trip. This is calculated as a citywide fee herein.

Figure 38. Transportation Impact Fee Methodology Chart

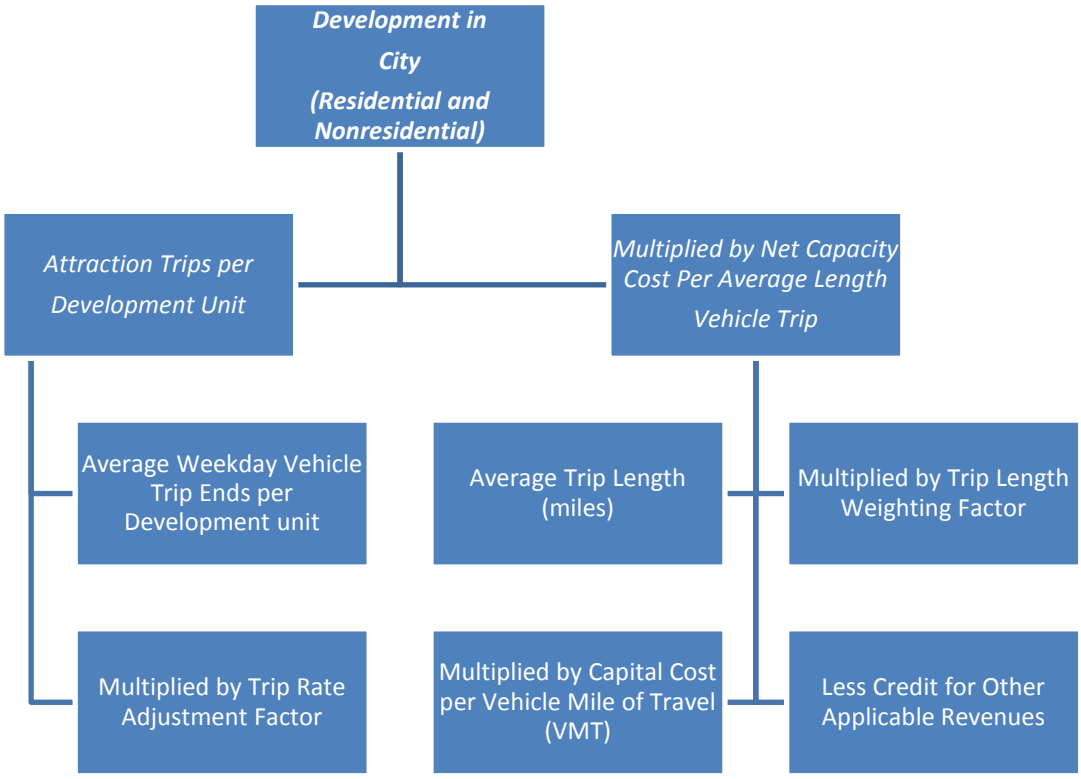

[1] *Urban Area Transportation Plan, November 2007. The Plan includes a complete inventory of the transportation network in Sandpoint and its environs and by reference is incorporated into this document.*

PROJECTED NEED FOR ROAD CAPACITY IMPROVEMENTS

Calculation of impact fees requires projected development in the City to be converted into average weekday vehicle trips and vehicle miles of travel as described in the following sections.

Trip Generation

Trip generation rates used in the City of Sandpoint impact fees are average daily weekday vehicle trip ends from the reference book, *Trip Generation, 8TH Edition*, published by the Institute of Transportation Engineers (ITE) in 2008. Vehicle trips are used to ensure proportionality by type of land use. A vehicle trip end represents a vehicle either entering or exiting a development (as if a traffic counter were placed across a driveway). To calculate impact fees, trip generation rates are adjusted to avoid double counting each trip at both the origin and destination points—thereby allocating the trip to the appropriate land use. The basic trip adjustment factor is 50 percent. Further adjustments are made by type of land use to account for travel demand and development characteristics. Each is discussed in turn below.

Trip Rate Adjustments

Trip generation rates are adjusted to avoid double counting each trip at both the origin and destination points. Therefore, the basic trip adjustment factor is 50 percent. As discussed below, additional adjustments are made to ensure the fees are proportionate to the infrastructure demand for particular types of development.

Adjustment for Commuting Patterns

Residential development in the City of Sandpoint has a larger trip adjustment factor of 57 percent to account for commuters leaving Sandpoint for work. According to the National Household Travel Survey,[2] home-based work trips are typically 31 percent of "production" trips, in other words, out-bound trips (which are 50 percent of all trip ends). Also, data from the US Census for 2009 indicates that 57 percent of Sandpoint's workers travel outside of the City for work (see Figure 39). In combination, these factors (0.31 x 0.50 x 0.57 = 0.09) account for 9 percent of additional production trips. The total adjustment factor for residential includes attraction trips (50 percent of trip ends) plus the journey-to-work commuting adjustment (9 percent of production trips) for a total of 59 percent.

[2] U.S. Department of Transportation and Federal Highway Administration, *Summary of Travel Trends: 2001 National Household Travel Survey,* December 2004 (see Table 29).

Figure 39. Adjustment for Journey-to Work Commuting

Sandpoint Workers (2009)	4,090
Sandpoint Residents Working in City (2009)	1,772
Sandpoint Residents Commuting Outside City for Work	2,318
Percent Commuting out of the City	**57%**
Additional Production Trips	9%
Residential Trip Adjustment Factor	***59%***

Source: U.S. Census, OnTheMap Application (version 5)
Longitudinal-Employer Household Dynamics (LEHD) Program; ITE

Adjustment for Pass-By Trips

The basic trip adjustment factor of 50 percent is applied to the Office/Institutional and Industrial categories. The Retail category has a trip factor of less than 50 percent because this type of development attracts vehicles as they pass-by on arterial and collector roads. For an average size shopping center, the ITE manual indicates that on average 25 percent of the vehicles that enter are passing by on their way to some other primary destination. The remaining 75 percent of attraction trips have the shopping center as their primary destination. Because attraction trips are half of all trips, the trip adjustment factor is 75 percent multiplied by 50 percent, or approximately 38 percent of the trip ends.

Figure 40. Commercial/Shopping Center Trip Rates and Pass-By Adjustments

Floor Area in thousands (KSF)	***Shopping Centers*** (ITE 820 Weekday*)		Commercial Pass-by Trips**	Commercial Trip Adj Factor***
	Trip Ends	Rate/KSF		
25	2,758	110.32	45%	28%
50	4,328	86.56	39%	31%
100	6,791	67.91	34%	33%
200	10,656	53.28	29%	36%
328	***Average Size***	***42.94***	***25%***	***38%***

* Trip Generation, ITE, 2008.
** Based on data published by ITE in Trip Generation Handbook (2004), the best trendline correlation between pass-by trips and floor area is a logarithmic curve with the equation ((-7.6967*LN(KSF)) + 69.448).
*** To convert trip ends to vehicle trips, the standard adjustment factor is 50%. Due to pass-by trips, commercial trip adjustment factors are lower, as derived from the following formula (0.50*(1-passby pct)).

Estimated Vehicle Trips in Sandpoint

As an alternative to simply using the national average trip generation rate for residential development, the Institute of Transportation Engineers (ITE) publishes regression curve formulas that can be used to derive custom trip generation rates using local demographic data. Key independent variables needed for the analysis (i.e., vehicles available, housing units, households and persons) are available from the U.S. Census Bureau American Community Survey (ACS) 2005-2009 data for Sandpoint. This data was used to derive custom average weekday vehicle trip ends by type of housing, as shown below.

Figure 41. Average Weekday Vehicle Trip Ends by Housing Type in City of Sandpoint

City of Sandpoint, ID		Households (2)			Vehicles per
	Vehicles Available (1)	Single Family Units	Multifamily Units	Total	Household by Tenure
Owner-occupied	3,028	1,501	54	1,555	1.95
Renter-occupied	1,904	589	765	1,354	1.41
TOTAL	***4,932***	***2,090***	***819***	***2,909***	***1.70***
Housing Units (6) =>		2,410	978	3,388	
Persons per Housing Unit =>		*2.19*	*2.12*		

	Persons (3)	Trip Ends (4)	Vehicles by Type of Housing	Trip Ends (5)	**Average Trip Ends**	**Trip Ends per Housing Unit**	**ITE Trip Ends Per Unit**	**Difference from ITE**
Single Family Units	5,274	13,588	3,751	21,690	17,639	7.30	9.57	-24%
Multifamily Units	2,078	7,146	1,181	4,946	6,046	6.20	6.65	-7%
TOTAL	7,352	20,734	4,932	26,636	23,685	7.00		

(1) Vehicles available by tenure from Table B25046, American Community Survey, 2005-2009.
(2) Households by tenure and units in structure from Table B25032, American Community Survey, 2005-2009.
(3) Persons by units in structure from Table B25033, American Community Survey, 2005-2009.
(4) Vehicle trips ends based on persons using formulas from Trip Generation (ITE 2008). For single family housing (ITE 210), the fitted curve equation is EXP(0.91*LN(persons)+1.52). To approximate the average population of the ITE studies, persons were divided by 9 and the equation result multiplied by 9. For multifamily housing (ITE 220), the fitted curve equation is (3.47*persons)-64.48.
(5) Vehicle trip ends based on vehicles available using formulas from Trip Generation (ITE 2008). For single family housing (ITE 210), the fitted curve equation is EXP(0.99*LN(vehicles)+1.81). To approximate the average number of vehicles in the ITE studies, vehicles available were divided by 15 and the equation result multiplied by 15. For multifamily housing (ITE 220), the fitted curve equation is (3.94*vehicles)+293.58.
(6) Housing units from Table B25024, American Community Survey, 2005-2009.

As shown, a single family detached unit has an average daily trip rate of 7.30 per unit (compared to 9.57 from ITE, or 24 percent lower) and a multifamily unit has an average daily trip rate of 6.20 trips per unit (compared to 6.65 per unit from ITE, or 7 percent lower). Using this data, average daily trips in the City can be derived.

We further analyzed demographic data in an effort to potentially refine the impact fee schedule to be more progressive for residential development. This can be done by developing fees by size of housing unit by bedroom count. Household size and vehicle trip rates can be derived using custom tabulations of demographic data by bedroom range from survey responses provided by the U.S. Census Bureau in files known as Public Use Micro-data Samples (PUMS). TischlerBise used American Community Survey (ACS) 5-Year 2005-2009 data to derive persons per housing unit by number of bedrooms as well as number of vehicle trips per unit by number of bedrooms.

As shown in Figure 42, TischlerBise derived trip generation rates and average persons, by bedroom range, using the number of persons and vehicles available. As shown, as number of bedrooms increases, trip ends and persons per unit increase as well.

Figure 42. Average Persons and Trip Ends by Bedroom Range in City of Sandpoint

	Persons (1)	Trip Ends (2)	Vehicles Available (1)	Trip Ends (3)	Average Trip Ends	Housing Units (1)	Recommended Multipliers for Sandpoint (4) Trip Ends per Housing Unit	Persons per Housing Unit
Single Family 0-3 Bdrms	6,506	17,417	2,941	17,047	17,232	3,391	6.77	1.97
Single Family 4+ Bdrms	2,841	8,195	907	5,319	6,757	989	9.11	2.95
Single Family Subtotal	*9,347*	*25,612*	*3,848*	*22,366*	*23,989*	*4,380*	*7.30*	*2.19*
Multifamily Subtotal	*757*	*2,562*	*425*	*1,968*	2,265	*481*	*6.20*	*2.12*
GRAND TOTAL	10,104	28,174	4,273	24,334	26,254	4,861		

(1) American Community Survey, Public Use Microdata Sample for ID PUMA 00100 (unweighted data for 2005-2009).
(2) Vehicle trips ends based on persons using formulas from Trip Generation (ITE 2008). For single family housing (ITE 210), the fitted curve equation is EXP(0.91*LN(persons)+1.52). To approximate the average population in the ITE studies, persons were divided by 17 and the equation result multiplied by 17.
(3) Vehicle trip ends based on vehicles available using formulas from Trip Generation (ITE 2008). For single family housing (ITE 210), the fitted curve equation is EXP(0.99*LN(vehicles)+1.81). To approximate the average number of vehicles in the ITE studies, vehicles available were divided by 15 and the equation result multiplied by 15.
(4) Recommended multipliers are scaled to make the average value by type of housing for ID PUMA 00100 match the average value for Sandpoint, derived from American Community Survey 2005-2009 data, with persons adjusted to the Citywide average of 2.19 persons per housing unit.

Vehicle Miles of Travel

A Vehicle Mile of Travel (VMT) is a measurement unit equal to one vehicle traveling one mile. In the aggregate, VMT is the product of vehicle trips multiplied by the average trip length.[3] A lane mile is a rectangular area of pavement, one lane wide and one mile long. The average trip length to development in the City is calibrated using data on City arterial and collector lane miles and a lane capacity standard discussed below. VMT is the appropriate demand indicator or "service unit," as defined by the Idaho Impact Fee Act.

Lane Capacity

Road impact fees are based on a lane capacity standard of 6,950 vehicles per lane, which assumes a generalized annual average daily volume for a two-lane, interrupted rural city roadway operating at a Level of Service (LOS) "D". This type of facility has an estimated capacity of 13,900 vehicles per day, or 6,950 vehicles per lane. [4]

[3] Typical VMT calculations for development-specific traffic studies, along with most transportation models of an entire urban area, are derived from traffic counts on particular road segments multiplied by the length of that road segment. For the purpose of impact fees, VMT calculations for are based on attraction (inbound) trips to development located in the City, with the trip length calibrated to the City's current road network (arterials and collectors). This refinement eliminates pass-through or external-external trips, travel to development within municipalities and travel on non-City arterials and collectors (e.g. interstate highways and local streets).

[4] See Table 4-1, "Generalized Annual Average Daily Volumes for Florida's Urbanized Areas," in *Quality/Level of Service Handbook 2002*, Florida Department of Transportation.

Average Trip Length on Road System

Determining average trip length for the purpose of impact fees requires consideration of the functional classification of roads and the community's criteria for system improvements, as discussed above. A typical vehicle trip, such as a person leaving their home and traveling to work, generally begins on a local street that connects to a collector street, which connects to an arterial road and eventually to a state or interstate highway. This progression of travel up and down the functional classification chain limits the average trip length question to the following, *"What is the average vehicle trip length on the current City road system (i.e., City arterials and collectors)?"*

Knowing the increase in vehicle trips, existing City arterial and collector lane miles, and lane capacity, it is possible to derive the average trip length (expressed in miles) on the City system of 6.77.

Trip Length Weighting Factor by Type of Land Use

The transportation impact fee methodology includes a percentage adjustment, or weighting factor, to account for trip length variation by type of land use. As documented in Table 6 of the 2001 National Household Travel Survey (published December 2004 by the Federal Highway Administration), vehicle trips from residential development are approximately 122 percent of the average trip length. The residential trip length adjustment factor includes data on home-based work trips, social and recreational purposes.

Conversely, shopping trips associated with commercial development are roughly 68 percent of the average trip length while other nonresidential development typically accounts for trips that are 75 percent of the average trip length. Note, the national travel survey is not the source of the trip length used in the impact fee calculations. Rather, average trip length is based on the current City street system in Sandpoint today.

Development Prototypes

The relationship between the amount of development in the City of Sandpoint and the projected demand for infrastructure is documented below. Figure 43 summarizes the input variables used to determine current and project trips and vehicle miles of travel from development.

Figure 43. Road Impact Fee Input Variables

	Weekday
SFD Weekday VTE per Unit	7.30
Multifamily/Other Res Weekday VTE per Unit	6.20
Commercial Weekday VTE/KSF*	42.94
Office Weekday VTE/KSF**	11.01
Ind Weekday VTE/KSF***	3.82
Residential Trip Adj Factor	59%
Commercial Trip Adj Factor	38%
All Other Trips Adj	50%
Avg Miles/Trip on City ARTERIALS & COLLECTORS	6.77
Residential Trip Length	122%
Retail Trip Length	68%
Other Nonresidential Trip Length	75%
Capacity Per Lane	6950

Travel Demand in the City of Sandpoint

Projected development in Sandpoint over the next 20 years, and the corresponding need for additional lane miles is documented in Figure 44. (The demographic data shown at the top of Figure 44 is from the demographic projections provided in demographic memo and is included in Appendix of the final report.) Trip generation rates and trip adjustment factors convert projected development into average weekday vehicle trips, shown in the shaded portion of the figure. For example, in the base year, single-family (SFD) detached housing units will produce 11,435 weekday trips (2,655 x 7.3 x 59% = 11,435). The same calculation is done for each land use type. As noted above, VMT is the product of vehicle trips multiplied by the average trip length from Figure 43 above.

Figure 44. Travel Demand Calibration for Road Impact Fees

						5-year increments -->			
Year->	Base	1	2	3	4	5	10	15	20
	2011	2012	2013	2014	2015	2016	2021	2026	2031
DEMAND DATA									
SFD UNITS	2,655	2,695	2,735	2,776	2,818	2,860	3,081	3,319	3,576
MF/OTHER RES UNITS	1,379	1,399	1,420	1,442	1,463	1,485	1,600	1,723	1,857
COMMERCIAL KSF	863	876	889	902	915	928	997	1,072	1,152
OFFICE KSF	2,348	2,382	2,417	2,452	2,487	2,523	2,712	2,914	3,131
INDUSTRIAL KSF	2,259	2,292	2,325	2,359	2,393	2,427	2,609	2,803	3,013
SFD TRIPS	11,435	11,607	11,781	11,958	12,137	12,319	13,271	14,297	15,402
MF/OTHER RES TRIPS	5,043	5,118	5,195	5,273	5,352	5,432	5,852	6,305	6,792
RES TRIPS	**16,478**	**16,725**	**16,976**	**17,231**	**17,489**	**17,751**	**19,123**	**20,601**	**22,193**
COMMERCIAL TRIPS	14,089	14,293	14,500	14,711	14,924	15,140	16,270	17,485	18,790
OFFICE TRIPS	12,926	13,113	13,304	13,496	13,692	13,891	14,927	16,041	17,239
INDUSTRIAL TRIPS	4,314	4,377	4,440	4,505	4,570	4,636	4,982	5,354	5,754
NONRES TRIPS	**31,329**	**31,784**	**32,244**	**32,712**	**33,186**	**33,667**	**36,180**	**38,880**	**41,782**
TOTAL TRIPS	**47,807**	**48,509**	**49,220**	**49,943**	**50,675**	**51,419**	**55,303**	**59,482**	**63,976**
City VMT	**288,495**	**292,746**	**297,060**	**301,438**	**305,880**	**310,387**	**333,941**	**359,283**	**386,548**
City Lane Mile	41.5	42.1	42.7	43.4	44.0	44.7	48.0	51.7	55.6
ANL Lane Mile Increase		0.6	0.6	0.6	0.6	0.6	0.7	0.8	0.8
Cumulative Lane Miles						3.1	6.5	10.2	14.1

COST OF GROWTH-RELATED IMPROVEMENTS

The City has identified a subset of road improvements from the City of Sandpoint's portion of the "Urban Area Transportation Plan (UATP)" needed due to growth, anticipated to be built within the next 10 years, and funded either in part or wholly through local means. TischlerBise obtained volume and capacity information for each of these improvements from David Evans & Associates from the Travel Demand Model developed and implemented for the UATP and subsequent concurrency analyses. The impact fee road improvements plan is shown below in Figure 45 along with the calculated growth share for each project and the total cost per Vehicle Mile of Travel (VMT) for the plan. As shown, an additional 3.0 lane miles are projected to be built over the next 10 years along with intersection improvements that will increase capacity. Growth share is calculated by determining the amount of future capacity available to serve future growth (the capacity that is not already being used by existing development). (The formula is: 1 - (existing volume / future capacity.)

"Other costs" in the figure reflect outside funding such as from the state (Idaho Transportation Department). Urban Renewal funding is included as the planned improvements are both demanded

from and will benefit future growth. Growth shares of the costs are calculated and applied accordingly.

The existing balance from the City's Circulation Impact Fee Fund is subtracted from the total plan cost to account for revenues already collected by the City for capacity improvements not yet built. The City's share of the planned costs is shown below and used to calculate a cost per vehicle mile of travel (VMT). Given a projected increase of 45,446 vehicle miles of travel over the next 10 years within the City, the resulting cost per VMT for growth-related needs is $94.71 per VMT.

Figure 45. Cost Per VMT of Capacity Road Improvements

Plan Timing	City Proj. #	Project	Existing Lanes	Future Lanes	Length (miles)	Current Lane Miles	Planned Lane Miles	Lane-Mile Increase	CITY COST	CITY COST (Urb. Ren.)*	TOTAL CITY COST	OTHER COST	TOTAL PROJ. COST	CITY COSTS Growth %**	CITY COSTS Growth $
Years 1-5	S-052	Schweitzer Cutoff Rd	2	3	0.28	0.56	0.84	0.28	$243,200		$243,200	$2,956,800	$3,200,000	19%	$44,992
Years 1-5	S-1103	Schweitzer Cutoff Rd @ Boyer Ave	1	1		0.00	0.00	0.00	*included above*						
Years 1-5	S-1012	Pine Street@ Division Ave	1	1		0.00	0.00	0.00	$400,000		$400,000		$400,000	83%	$332,686
Years 6-10	S-012	Downtown Two-Way Operation (Downtown URA)			0.98	2.87	2.87	0.00		$7,250,000	$7,250,000		$7,250,000	16%	$1,142,075
Years 6-10	S-045	US-2 Extension (Curve Project) (Downtown URA	0	4	0.25	0.00	1.00	1.00		$500,000	$500,000	$5,000,000	$5,500,000	16%	$78,764
Years 6-10	S-050	Baldy Mountain Rd (Northern URA)	2	3	0.77	1.54	2.31	0.77		$3,200,000	$3,200,000		$3,200,000	39%	$1,256,000
Years 6-10	S-065	Woodland Drive	2	3	0.44	0.88	1.32	0.44	$690,000		$690,000		$690,000	95%	$654,733
Years 6-10	S-026	Larch street	2	3	0.50	1.00	1.50	0.50	$789,000		$789,000		$789,000	45%	$356,177
Years 6-10	S-036	Ontario Ave	2	2	0.06	0.12	0.12	0.00	$432,500		$432,500		$432,500	93%	$402,225
Years 6-10	S-1024	Cedar St @ Boyer Ave	1	1	0.00	0.00	0.00	0.00	$300,000		$300,000		$300,000	72%	$214,500
		TOTALS			**3.3**	**7.0**	**10.0**	**3.0**	**$2,854,700**	**$10,950,000**	**$13,804,700**	**$7,956,800**	**$21,761,500**	32%	**$4,482,152**

TOTAL Cost (City Share)	**$4,482,152**
City of Sandpoint Circulation Impact Fee Fund Balance	**$177,909**
Net Growth-Related Streets Cost (City Share)	***$4,304,243***
VMT Increase (10 Years)	**45,446**
Capital Cost per VMT	**$94.71**

** Funding from tax increment in the respective Urban Renewal Area*
*** Reflects new growth's share of future capacity from UATP Travel Demand Model*
Sources: City of Sandpoint, David Evans & Associates, TischlerBise.

Cost for Impact Fee Study

Included in the development fee is the cost for preparation of the Transportation portion of the development impact fees as allowed by the Idaho Act. This is calculated based on projected growth in VMTs over the next five years, which represents the maximum period of time when the CIP and fees should be updated to reflect changes in development and levels of service. The cost per VMT is $.93. See Figure 46.

Figure 46. Development Fee Preparation Cost (Streets Portion)

Streets Consultant Fee	$20,454
Increase in VMTs (5 yrs)	21,892
Cost per trip	**$0.93**

CREDIT EVALUATION

A general requirement that is common to impact fee methodologies is the evaluation of credits. A revenue credit may be necessary to avoid potential double payment situations from one-time impact fees plus on-going payments of other revenues that may also fund growth-related capital improvements. Because the City's share of the growth-related costs of street and intersection improvements will be fully funded by the development impact fees, a credit for other revenues is not applicable.

The City has two Urban Renewal Areas (URA)—Downtown URA and Northern URA. Both URA's have capital programs that include capacity road improvements (indicated as such on the above CIP). These projects will be funded in part by tax increment financing. That is, the increase in property taxes over the base year set by the Urban Renewal Authority will be used to fund the capital program. Because property taxes will be used to pay for some of the projects included in the Impact Fee CIP, a credit is recommended. This is to mitigate any potential double payment situations where some of the taxes paid by new development in these areas are dedicated to infrastructure improvements and therefore if development were to pay the full impact fee, the development would be paying twice for the same improvements. Separate impact fee schedules are provided at the end of this chapter for each URA.

In addition, the Idaho impact fee law requires an evaluation of funding from the General Fund for improvements for which an impact fee will be collected. Therefore, included in the fee calculation is a reduction to account for past funding for Transportation capacity improvements paid out of the General Fund. Based on an analysis from the past three years, approximately 0.6 percent of the

General Fund is spent on Transportation capacity improvements. Therefore, this amount is included as a reduction to the gross capital cost per trip to derive the net capital cost per trip.

IMPACT FEE SERVICE AREA

Given the road network on which the fees are based—reflecting system-level roads (arterials and major collectors), with improvements on one facility that will shift traffic to the improved roadway, it is recommended that one service area be used for the Transportation impact fee.

TRANSPORTATION INPUT VARIABLES AND DEVELOPMENT IMPACT FEES

Infrastructure standards used to calculate Transportation impact fees are shown at the top of Figure 47. For Transportation impact fees, a "service unit" is a vehicle mile of travel (VMT = vehicle trips (adjusted) x average trip length (adjusted). As specified in 67-8208(e), the variables shown in the table below are used to convert service units to development units. Figure 47 summarizes service units, conversion factors, and cost factors per service unit for Transportation development impact fees as detailed above.

Maximum allowable Transportation development impact fees by land use type are also shown below in Figure 47. Residential fees are per housing unit and nonresidential fees are per gross square foot of floor area. The fees are calculated by multiplying the service units per land use type by the net capital cost per service unit. For example, for an average single family detached unit, the trip rate of 7.3 weekday trips multiplied by 59 percent trip adjustment is multiplied by the average trip length (6.77 miles x 122 percent) to determine VMT for this size housing unit (35.57). This is then multiplied by the net capital cost per VMT of $95.08 to derive the Streets development impact fee *per average single family housing unit* of $3,382 (truncated). The same approach is taken for nonresidential land uses.

Figure 47. Transportation (Streets) Input Variables and Maximum Allowable Impact Fees by Type of Land Use: Outside URAs

Infrastructure Standards

Average Miles per Vehicle Trip		6.77
Capital Cost per VMT		$94.71
Consultant Cost per VMT		$0.93
GROSS COST PER VMT		*$95.65*
General Fund Reduction	*0.6%*	($0.56)
Debt Service Credit		$0
Net Capital Cost per VMT		***$95.08***

			[A]	[B]	[C]	[D]	VMT = [A] x [B] x [C] x [D]	Impact Fee per Housing Unit		
Residential Development		*Number of*	***Weekday Vehicle Trip Ends***	***Trip Rate Adjustment Factors***	***Avg Miles per Veh. Trip on System***	***Trip Length Weighting Factors***	***VMT***	***Proposed Streets Impact Fee***	***Current Fee***	***Increase (Decrease)***
ITE Code	*Unit Type*	*Bedrooms*	*(Per Housing Unit)*				*per unit*	*(Per Housing Unit)*		
220	Multifamily	All Sizes	6.2	59%	6.77	122%	30.21	$2,872.00	$853.45	$2,018.55
210	Single Family	0-3	6.8	59%	6.77	122%	33.01	$3,138.00	$1,066.81	$2,071.19
210	Single Family	4+	9.1	59%	6.77	122%	44.38	$4,219.00	$1,066.81	$3,152.19
210	*Single Family*	*Avg*	*7.3*	*59%*	*6.77*	*122%*	35.57	$3,382.00	*$1,066.81*	*$2,315.19*

						Impact Fee per Square Foot of Floor Area		
Nonresidential Development	*(Per 1,000 sq. ft.)*				*per 1,000 sf*	*(Per Square Foot of Floor Area)*		
820 Commercial / Shpg Ctr Average	42.94	38%	6.77	68%	75.12	$7.14	$1.93	$5.21
710 Office	11.01	50%	6.77	75%	27.95	$2.65	$0.49	$2.16
151 Mini-Warehouse	2.50	50%	6.77	75%	6.35	$0.60	$0.11	$0.49
150 Warehousing	3.56	50%	6.77	75%	9.04	$0.85	$0.16	$0.69
140 Manufacturing	3.82	50%	6.77	75%	9.70	$0.92	$0.17	$0.75
110 Light Industrial	6.97	50%	6.77	75%	17.70	$1.68	$0.31	$1.37

IMPACT FEES WITHIN SANDPOINT'S URBAN RENEWAL AREAS

As noted above, the City has two Urban Renewal Areas (URA)—Downtown URA and Northern URA. Both URA's have capital programs that include capacity road improvements (indicated as such on the above CIP). Because property taxes will be used to pay for some of the projects included in the Impact Fee CIP, a credit is recommended that will be integrated into the impact fee calculation. This is to mitigate any potential double payment situations where some of the taxes paid by new development in these areas are dedicated to infrastructure improvements and therefore if development were to pay the full impact fee, the development would be paying twice for the same improvements. Impact fee schedules specific to each URA are provided below.

Credits

As described previously, a general requirement common to impact fee methodologies is the evaluation of credits. A revenue credit may be necessary to avoid potential double payment situations from one-time road impact fees plus on-going payments of other revenues that may also fund growth-related road capital improvements.

A credit for revenue generated by property taxes dedicated for capital improvements with each URA is calculated. Information on the URA TIF revenue credits is provided below in the following figures. Projected tax increment revenue for each source was provided by the City of Sandpoint from Sandpoint Urban Renewal Agency cash flow projections for each URA. Because the impact fee road improvement program reflect only a portion of the URA capital improvement plan and of those projects, only a portion are growth-related, the projected revenues are adjusted to reflect the projected amount to be used for growth-related impacts. The calculation for each URA is shown below.

Figure 48. Urban Renewal Areas Growth Share Calculation

Downtown Urban Renewal Area Growth Share Calculation

Downtown URA Total Projected Capital Expenses (20-Yr)*	$11,907,000
Downtown URA Road Projects in City Impact Fee CIP (City Costs)**	$7,750,000
Impact Fee Project as % of Total Downtown URA Capital Plan	65.1%
Growth Share of Downtown URA Road Projects**	$1,220,838
Growth Share as % of Impact Fee CIP	15.8%
Percent of Downtown URA Plan that is Growth Related	10.3%

** Downtown 2010 Plan Amendment, Sandpoint Urban Renewal Agency*
*** Development Impact Fee Study, 2011, TischlerBise*

Northern Urban Renewal Area Growth Share Calculation

Northern URA Total Projected Capital Expenses (20-Yr)*	$7,785,000
Northern URA Road Projects in City Impact Fee CIP (City Costs)**	$3,200,000
Impact Fee Project as % of Total Northern URA Capital Plan	41.1%
Growth Share of Northern URA Road Projects**	$1,256,000
Growth Share as % of Impact Fee CIP	39.3%
Percent of Northern URA Plan that is Growth Related	16.1%

** Northern 2010 Plan Amendment, Sandpoint Urban Renewal Agency*
*** Development Impact Fee Study, 2011, TischlerBise*

Using annual projected future revenue from tax increments and adjusting for the growth-related portion, a per VMT credit is derived. The adjusted projected revenue is divided by projected vehicle miles of travel in the respective URA in each year to get a per VMT credit. For example, for the

Downtown URA, the projected annual growth-related revenue of $50,437 in fiscal year 2012 is divided by projected VMTs within the URA of 59,930 for a credit per VMT of $0.84. To account for the time value of money, annual revenues per VMT are discounted using a net present value formula based on an average interest rate of 4.0 percent. The total net present value of future revenue per trip for the Downtown URA is $14.46; and for the Northern URA, the total net present value per VMT is $12.72. This amount is subtracted from the gross capital cost per VMT to derive a net capital cost per VMT within each URA to derive a separate fee schedule for each area.

Figure 49. Revenue Credit: Downtown Urban Renewal Area

Fiscal Year	*Projected Tax Increments [1]*	*Projected Tax Increments for Growth Related Projects[1]*	*TOTAL to Credit*	*Total Res & Nonres VMT in Downtown URA [2]*	*Credit Per VMT*
		10.3%			
2011	$489,680	$50,437	$50,437	59,930	$0.84
2012	$538,648	$55,481	$55,481	61,357	$0.90
2013	$565,581	$58,255	$58,255	62,783	$0.93
2014	$593,860	$61,168	$61,168	64,210	$0.95
2015	$623,553	$64,226	$64,226	65,637	$0.98
2016	$654,731	$67,437	$67,437	67,063	$1.01
2017	$687,467	$70,809	$70,809	68,490	$1.03
2018	$721,840	$74,350	$74,350	69,917	$1.06
2019	$757,932	$78,067	$78,067	71,344	$1.09
2020	$795,829	$81,970	$81,970	72,770	$1.13
2021	$835,621	$86,069	$86,069	81,330	$1.06
2022	$877,402	$90,372	$90,372	75,624	$1.20
2023	$921,272	$94,891	$94,891	77,050	$1.23
2024	$967,335	$99,636	$99,636	78,477	$1.27
2025	$1,015,702	$104,617	$104,617	79,904	$1.31
2026	$1,066,487	$109,848	$109,848	81,330	$1.35
2027	$1,119,811	$115,341	$115,341	82,783	$1.39
2028	$1,175,802	$121,108	$121,108	84,261	$1.44
2029	$1,234,592	$127,163	$127,163	85,765	$1.48
2030	$0	$0	$0	0	
TOTAL	$15,643,146	$1,611,244	$1,611,244		$21.66
				Discount Rate	*4.0%*
				Net Present Value per VMT [3]	**$14.46**

[1] Projected tax increments from Sandpoint Urban Renewal Agency; growth share calculated by TischlerBise

[2] See Report and Appendix for VMT projections

[3] To account for the time value of money, payment per trip is discounted using a net present value formula assuming the average interest rate as shown.

Sources: City of Sandpoint; TischlerBise

Figure 50. Revenue Credit: Northern Urban Renewal Area

Fiscal Year	*Projected Tax Increments [1]*	*Projected Tax Increments for Growth Related Projects[1]*	*TOTAL*	*Total Res & Nonres VMT in North URA [2]*	*Credit Per VMT*
		16.1%			
2011	$211,360	$34,029	$34,029	50,305	$0.68
2012	$280,495	$45,160	$45,160	52,178	$0.87
2013	$294,520	$47,418	$47,418	54,052	$0.88
2014	$309,246	$49,789	$49,789	55,926	$0.89
2015	$324,709	$52,278	$52,278	57,799	$0.90
2016	$340,944	$54,892	$54,892	59,673	$0.92
2017	$357,991	$57,637	$57,637	61,547	$0.94
2018	$375,891	$60,518	$60,518	63,420	$0.95
2019	$394,685	$63,544	$63,544	65,294	$0.97
2020	$414,420	$66,722	$66,722	67,168	$0.99
2021	$435,141	$70,058	$70,058	78,410	$0.89
2022	$456,898	$73,561	$73,561	70,915	$1.04
2023	$479,742	$77,239	$77,239	72,789	$1.06
2024	$503,730	$81,100	$81,100	74,663	$1.09
2025	$528,916	$85,155	$85,155	76,536	$1.11
2026	$555,362	$89,413	$89,413	78,410	$1.14
2027	$583,130	$93,884	$93,884	80,330	$1.17
2028	$612,286	$98,578	$98,578	82,296	$1.20
2029	$642,901	$103,507	$103,507	84,311	$1.23
2030	$0	$0	$0	0	
TOTAL	$8,102,365	$1,304,481	$1,304,481		$18.92
				Discount Rate	*4.0%*
				Net Present Value per VMT [3]	**$12.72**

[1] Projected tax increments from Sandpoint Urban Renewal Agency; growth share calculated by TischlerBise
[2] See Report and Appendix for VMT projections
[3] To account for the time value of money, payment per trip is discounted using a net present value formula assuming the average interest rate as shown.
Sources: City of Sandpoint; TischlerBise

Impact Fees in the URAs

Given the above credits, separate fee schedules are provided for each URA below. As noted above, the revenue credit is subtracted from the gross capital cost per VMT to derive a reduced net capital cost per VMT, which is then used to calculate the fees.

Figure 51. Transportation (Streets) Input Variables and Maximum Allowable Impact Fees by Type of Land Use: Downtown URA

Infrastructure Standards: Downtown URA

Average Miles per Vehicle Trip	6.77
Capital Cost per VMT	$94.71
Consultant Cost per VMT	$0.93
GROSS COST PER VMT	*$95.65*
General Fund Reduction *0.6%*	($0.56)
TIF Credit per VMT	($14.46)
Net Capital Cost per VMT	***$80.62***

			[A]	[B]	[C]	[D]	VMT = [A] x [B] x [C] x [D]	Impact Fee per Housing Unit		
Residential Development		*Number of*	***Weekday Vehicle Trip Ends***	***Trip Rate Adjustment Factors***	***Avg Miles per Veh. Trip on System***	***Trip Length Weighting Factors***	***VMT***	***Proposed Streets Impact Fee***	***Current Fee***	***Increase (Decrease)***
ITE Code	*Unit Type*	*Bedrooms*	*(Per Housing Unit)*				*per unit*	*(Per Housing Unit)*		
220	Multifamily	All Sizes	6.2	59%	6.77	122%	30.21	$2,435.00	$853.45	$1,581.55
210	Single Family	0-3	6.8	59%	6.77	122%	33.01	$2,661.00	$1,066.81	$1,594.19
210	Single Family	4+	9.1	59%	6.77	122%	44.38	$3,577.00	$1,066.81	$2,510.19
210	*Single Family*	*Avg*	*7.3*	*59%*	*6.77*	*122%*	35.57	$2,867.00	*$1,066.81*	*$1,800.19*

								Impact Fee per Square Foot of Floor Area		
Nonresidential Development			*(Per 1,000 sq. ft.)*				*per 1,000 sf*	*(Per Square Foot of Floor Area)*		
820	Commercial / Shpg Ctr Average		42.94	38%	6.77	68%	75.12	$6.05	$1.93	$4.12
710	Office		11.01	50%	6.77	75%	27.95	$2.25	$0.49	$1.76
151	Mini-Warehouse		2.50	50%	6.77	75%	6.35	$0.51	$0.11	$0.40
150	Warehousing		3.56	50%	6.77	75%	9.04	$0.72	$0.16	$0.56
140	Manufacturing		3.82	50%	6.77	75%	9.70	$0.78	$0.17	$0.61
110	Light Industrial		6.97	50%	6.77	75%	17.70	$1.42	$0.31	$1.11

Figure 52. Transportation (Streets) Input Variables and Maximum Allowable Impact Fees by Type of Land Use: Northern URA

Infrastructure Standards: Northern URA

Average Miles per Vehicle Trip	6.77
Capital Cost per VMT	$94.71
Consultant Cost per VMT	$0.93
GROSS COST PER VMT	*$95.65*
General Fund Reduction *0.6%*	($0.56)
TIF Credit per VMT	($12.72)
Net Capital Cost per VMT	***$82.36***

			[A]	[B]	[C]	[D]	VMT = [A] x [B] x [C] x [D]	Impact Fee per Housing Unit		
Residential Development		*Number of*	***Weekday Vehicle Trip Ends***	***Trip Rate Adjustment Factors***	***Avg Miles per Veh. Trip on System***	***Trip Length Weighting Factors***	***VMT***	***Proposed Streets Impact Fee***	***Current Fee***	***Increase (Decrease)***
ITE Code	*Unit Type*	*Bedrooms*	*(Per Housing Unit)*				*per unit*	*(Per Housing Unit)*		
220	Multifamily	All Sizes	6.2	59%	6.77	122%	30.21	$2,488.00	$853.45	$1,634.55
210	Single Family	0-3	6.8	59%	6.77	122%	33.01	$2,718.00	$1,066.81	$1,651.19
210	Single Family	4+	9.1	59%	6.77	122%	44.38	$3,654.00	$1,066.81	$2,587.19
210	*Single Family*	*Avg*	*7.3*	*59%*	*6.77*	*122%*	35.57	$2,929.00	*$1,066.81*	*$1,862.19*

								Impact Fee per Square Foot of Floor Area		
Nonresidential Development			*(Per 1,000 sq. ft.)*				*per 1,000 sf*	*(Per Square Foot of Floor Area)*		
820	Commercial / Shpg Ctr Average		42.94	38%	6.77	68%	75.12	$6.18	$1.93	$4.25
710	Office		11.01	50%	6.77	75%	27.95	$2.30	$0.49	$1.81
151	Mini-Warehouse		2.50	50%	6.77	75%	6.35	$0.52	$0.11	$0.41
150	Warehousing		3.56	50%	6.77	75%	9.04	$0.74	$0.16	$0.58
140	Manufacturing		3.82	50%	6.77	75%	9.70	$0.79	$0.17	$0.62
110	Light Industrial		6.97	50%	6.77	75%	17.70	$1.45	$0.31	$1.14

The City has expressed an interest in further reducing the fees paid in the Downtown URA. As a matter of policy, the City Council could implement a program where the Downtown URA impact fees are paid through other sources of revenue. One such option is mentioned in the *2010 Amended Urban Renewal Plan for the Downtown Area:*

> *For development covered by an owner participation agreement or disposition and development agreement, the SURA shall have the authority, but not the obligation to cooperate with the developer to apply for a credit or reimbursement of any impact fee, or for any refund of said fee assessed by any other governmental entity.* ***The SURA shall also have the authority, but not the obligation, to consider paying of all or part of such impact fees from revenue allocation proceeds to the extent allowed by law.*** (Emphasis added.)

CASH FLOW PROJECTIONS

This section summarizes the potential cash flow to the City of Sandpoint, if the Transportation development impact fee is implemented at the maximum allowable amounts. The cash flow projections are based on the assumptions detailed in this study and provide an indication of the impact fee revenue and capital expenditures necessary to meet the demand for transportation improvements brought about by new development. To the extent the rate of development either accelerates or slows down, there will be a corresponding change in impact fee revenue and capital costs. The development projections on which the cash flow summary is based can be found in the Appendix to this report.

Figure 53 provides a summary of the projected ten-year cash flow from the Transportation impact fee and associated capital costs. A longer period of time is used for Transportation impact fees than other categories due to the long-term nature of road projects. Average annual fee revenue is approximately $397,000, if the fee is implemented at the maximum allowable levels. Total projected new fee revenue is projected at almost $4 million over 10 years. The bottom of the figure includes other revenue sources, including the balance of the current streets impact fee fund, other sources of funding identified in the CIP, and the remaining URA funds for projects including in the impact fee program. Given the available projected revenue sources, total revenue is $20.6 million. Total projected capital costs over the next ten years total approximately $21.8 million, resulting in a shortfall of $1.2 million to be covered by other revenue sources.

Figure 53. Cash Flow Summary for Transportation (Streets)

(Current $ in thousands)		1 2012	2 2013	3 2014	4 2015	5 2016	6 2017	7 2018	8 2019	9 2020	10 2021	*10-Year Average Annual*	*10-Year Cumulative Total*
REVENUES													
TRANSPORTATION: Streets													
8 Streets Fee - SFD		$121	$123	$125	$127	$129	$131	$133	$135	$137	$139	$130	$1,300
9 Streets Fee - Multifamily/Other Res		$55	$56	$57	$57	$58	$59	$60	$61	$62	$63	$59	$588
10 Streets Fee - Commercial		$81	$82	$84	$85	$86	$87	$89	$90	$91	$92	$87	$868
11 Streets Fee - Office/Instit		$85	$86	$88	$89	$90	$92	$93	$94	$96	$97	$91	$910
12 Streets Fee - Industrial		$28	$29	$29	$29	$30	$30	$31	$31	$32	$32	$30	$301
btotal Transportation (Streets) Fees		$371	$377	$382	$388	$393	$399	$405	$411	$417	$423	*$397*	*$3,966*
CAPITAL COSTS													
TRANSPORTATION: Streets													
Streets and Intersection Improvements		$2,176	$2,176	$2,176	$2,176	$2,176	$2,176	$2,176	$2,176	$2,176	$2,176	$2,176	$21,762
Consultant Cost		$4	$4	$4	$4	$4	$4	$4	$4	$4	$5	$4	$42
Subtotal Streets Costs		$2,180	$2,180	$2,180	$2,180	$2,180	$2,180	$2,180	$2,181	$2,181	$2,181	*$2,180*	*$21,804*
NET CASH FLOW (Impact Fees)-	*TRANSPORTATION: Streets*											*Current $ in thousands*	
Annual Surplus (or Deficit)		($1,809)	($1,804)	($1,798)	($1,793)	($1,787)	($1,781)	($1,775)	($1,769)	($1,763)	($1,757)	($1,784)	
Cumulative Surplus (or Deficit)		($1,809)	($3,613)	($5,411)	($7,204)	($8,990)	($10,772)	($12,547)	($14,317)	($16,080)	($17,838)		($17,838)
Other Transportation (Streets) Fund	*IF balance*												
Other Funding	$177.91	$974	$796	$796	$796	$796	$796	$796	$796	$796	$796		$8,135
Remaining Urban Renewal Funding		$847	$847	$847	$847	$847	$847	$847	$847	$847	$847		$8,473
Total Transportation Revenues		$2,192	$2,020	$2,025	$2,031	$2,036	$2,042	$2,048	$2,054	$2,060	$2,066		$20,574
NET CAPITAL FACILITIES CASH FLOW (ALL FUNDING)		**$12**	**($161)**	**($155)**	**($150)**	**($144)**	**($138)**	**($132)**	**($126)**	**($121)**	**($114)**		**($1,230)**

TRANSPORTATION: MULTI-USE PATHWAYS

The City of Sandpoint has a system of Multi-use Pathways that are used for alternative modes of transportation. The City intends to build new miles of Pathways to maintain the current level of service by implementing a Multi-use Pathway impact fee to be implemented on residential and nonresidential development. It is based on the current linear miles of multi-use pathways in the City of Sandpoint.

Figure 54 diagrams the general methodology used to calculate the Multi-use Pathway impact fee. It is intended to read like an outline, with lower levels providing a more detailed breakdown of the impact fee components. The residential portion of the fee is derived from the product of persons per housing unit (by type of unit) multiplied by the net capital cost per person. The nonresidential portion is derived from the product of nonresidential vehicle trips per 1,000 square feet of nonresidential space multiplied by the net capital cost per trip. The boxes in the next level down indicate detail on the components included in the fee.

Figure 54. Multi-use Pathway Fee Methodology Chart

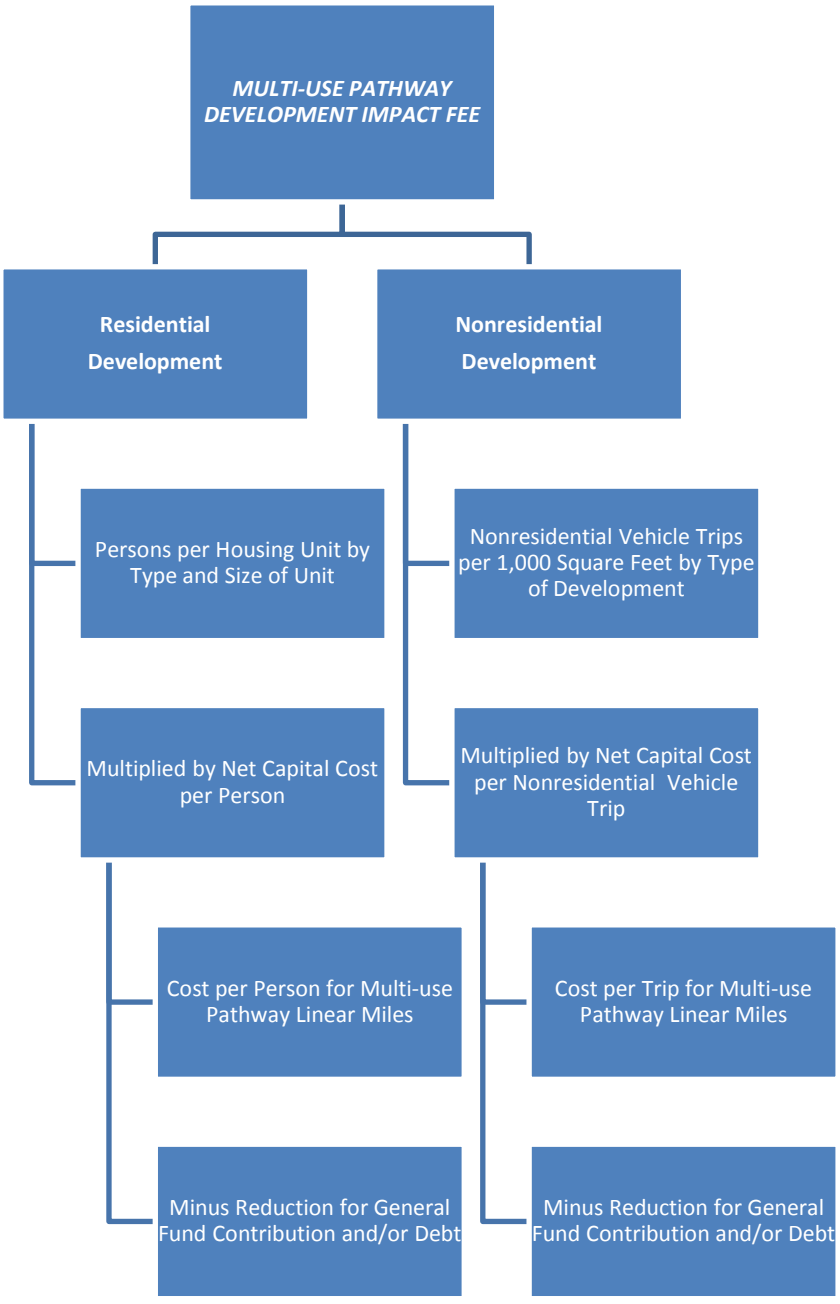

COST ALLOCATION FOR MULTI-USE PATHWAYS INFRASTRUCTURE

As pathways are used by both residents and employees in the City, costs are allocated to residential and nonresidential development. Figure 55 provides the proportionate share calculation to allocate costs between residential and nonresidential development.

Figure 55. Proportionate Share Calculation

			Demand	Person	Proportionate
Residential	*Demand Units in 2009*		*Hours/Day*	*Hours*	*Share*
Estimated Residents	8,615				
Residents Not Working	4,525		24	108,612	
Workers Living in City	4,090				
City Residents Working in City		1,772	16	28,352	
City Residents Working outside of City		2,318	16	37,088	
		Residential Subtotal		174,052	**78%**
Nonresidential					
Jobs Located in City	6,055				
City Residents Working in City		1,772	8	14,176	
Non-Resident Workers		4,283	8	34,264	
		Nonresidential Subtotal		48,440	**22%**
			TOTAL	222,492	**100%**

Source: US Census, OnTheMap Application and LEHD Origin-Destination Employment Statistics

MULTI-USE PATHWAYS INFRASTRUCTURE STANDARDS AND LEVELS OF SERVICE

The City currently has 11.31 miles of multi-use pathways. Allocating to residential and nonresidential development results in a level of service of 1.01 miles per person and .08 miles per nonresidential trip. Figure 56 provides the inventory of current pathways and values as well as costs per person and nonresidential trip and levels of service.

Figure 56. City of Sandpoint Multi-use Pathway Inventory and Cost Estimate

	Length (lin. miles)		
Sandpoint to Dover Community Trail	1.82		
Travers, Centennial, Great Northern Pathways	4.11		
Lakeview Park Trail	0.40		
City Beach Trail	0.50		
Long Bridge Trail	0.25		
Lincoln Avenue	0.49		
Pine Street	0.53		
Division Street	0.30		
Boyer Avenue	0.62		
N. Boyer to Popsicle Bridge	0.32	*Average*	
West City limits to downtown to Larch & Boye	1.97	*Cost per Mile*	*Total Value*
TOTAL	11.31	$160,000	$1,809,933

	Proportionate Share	*2011 Demand Units*	*Cost per Demand Unit*
Residential	78%	8,737 Population	$162.05
Nonresidential	22%	31,329 Nonresid Trips	$12.57

Lin. Mi. per 1,000 Persons	*1.01*
Lin. Mi. per 1,000 Nonres Trips	*0.08*

Source: City of Sandpoint

Cost for Development Impact Fee Study

Included in the fee is the cost for preparation of the Pathways portion of the development impact fees as allowed by the Idaho Act. This is calculated based on the projected growth in Sandpoint population and nonresidential development over the next five years, which represents the maximum period of time when the CIP should be updated to reflect changes in development and levels of service. The cost per person of $6.77 and the cost per nonresidential trip of $0.54 is derived by multiplying the consultant cost for preparing the development impact fees by the respective proportionate share then dividing by either the projected increase in population or increase in nonresidential trips over three years. See Figure 57.

Figure 57. Development Fee Preparation Cost (Pathways Portion)

		Residential	*Nonresidential*
Service Unit		Person	Vehicle Trip
Proportionate Share		78%	22%
Pathways Consultant Fee	$5,844	$4,572	$1,272
Increase in Service Units	5 yrs	675	2,338
Cost per Service Unit		**$6.77**	**$0.54**

CREDIT EVALUATION

The City does not have any current outstanding debt for Pathways capital improvements that will be retired through property taxes. Included in the fee calculation is an examination of past funding for Pathways capacity improvements that were paid out of the General Fund as required by Idaho impact few law. Based on an analysis from the past three years, we found that 0 percent of the General Fund has been spent on Pathways capacity improvements. Therefore, no credit is included.

PATHWAYS INPUT VARIABLES AND DEVELOPMENT IMPACT FEES

For Pathways infrastructure, a "service unit" for residential development is a person and for nonresidential development, it is a vehicle trip. As specified in 67-8208(e), the variables shown in the table below are used to convert service units to development units.

Level of service standards for the Pathways development impact fees are shown in Figure 28. Development impact fees are based on persons per housing unit by type and size for the residential fee and vehicle trip ends per 1,000 square feet for nonresidential development. Average weekday vehicle trip ends are from the reference book, *Trip Generation (Seventh Edition, 2008)*, published by the Institute of Transportation Engineers (ITE). A vehicle trip end represents a vehicle either entering or exiting a development (as if a traffic counter were placed across a driveway). To calculate impact fees, trip generation rates are adjusted to avoid double counting each trip at both the origin and destination points—thereby allocating the trip to the appropriate land use.

The basic trip adjustment factor is 50 percent for all nonresidential development except commercial. For commercial/shopping center development, the trip adjustment factor is less than 50 percent because retail uses attract vehicles as they pass by on arterial and collector roads. For example, when someone stops at a convenience store on the way home from work, the convenience store is not the primary destination. For an average size shopping center, the ITE manual indicates that on average 25 percent of the vehicles that enter are passing by on their way to some other primary destination. The remaining 75 percent of attraction trips have the shopping center as their primary destination. Because attraction trips are half of all trips, the trip adjustment factor is 75 percent multiplied by 50 percent, or approximately 38 percent of the trip ends. (See the Appendix for further discussion.)

Figure 28 summarizes service units, conversion factors, and cost factors per service unit for the Pathways development impact fees as detailed above.

Maximum allowable Pathways development impact fees by land use type are also shown below in Figure 28. Residential fees are per housing unit and nonresidential fees are per gross square foot of floor area. The fees are calculated by multiplying the service units per land use type by the net capital cost per service unit.

An example of the calculation for an average size single family detached unit is: the net capital cost per person ($168.82) multiplied by the persons per housing unit for that size unit (2.19) to arrive at the development impact fee per average single family unit of $369. For nonresidential land uses, the trip rate for the respective type of use is multiplied by the trip adjustment factor and then multiplied by the impact fee per trip. For example, the impact fee for a shopping center is calculated as follows: 42.94 x 38% x $13.11 to yield an impact fee amount of $.21 per square foot.

Figure 58. Multi-use Pathways Input Variables and Maximum Allowable Impact Fees by Land Use

Residential

		Per Person
Multi-use Pathway		$162.05
Consultant Cost		$6.77
GROSS COST		*$168.82*
General Fund Reduction	*0%*	$0
Debt Service Credit		$0
		Per Person
NET CAPITAL COST		***$168.82***

Residential Impact Fee

			Impact Fee per Housing Unit		
Unit Type	***Number of Bedrooms***	***Persons per Housing Unit***	***Proposed Fee***	***Current Fee***	***Increase (Decrease)***
Multifamily/Other	All Sizes	2.12	$358.00	*na*	$358.00
Single Family	0-3	1.97	$332.00	*na*	$332.00
Single Family	4+	2.95	$497.00	*na*	$497.00
Single Family	*Avg*	*2.19*	*$369.00*	*na*	*$369.00*

Nonresidential

		Per Nonres. Trip
Multi-use Pathway		$12.57
Consultant Cost		$0.54
GROSS COST		*$13.11*
General Fund Reduction	*0%*	$0
Debt Service Credit		$0
		Per Trip
NET CAPITAL COST		***$13.11***

				Impact Fee per Square Foot of Floor Area		
Nonresidential Development Fee		***Weekday Vehicle Trip Ends***	***Trip Rate Adj. Factors***	***Proposed Fee***	***Current Fee***	***Increase (Decrease)***
ITE Code		*(Per 1,000 sq. ft.)*		*(Per Square Foot of Floor Area)*		
820	Commercial / Shpg Ctr	42.94	0.38	$0.21	*na*	$0.21
710	Office	11.01	0.50	$0.07	*na*	$0.07
151	Mini-Warehouse	2.50	0.50	$0.02	*na*	$0.02
150	Warehousing	3.56	0.50	$0.02	*na*	$0.02
140	Manufacturing	3.82	0.50	$0.03	*na*	$0.03
110	Light Industrial	6.97	0.50	$0.05	*na*	$0.05

SERVICE AREA

Given the nature of Pathways services and the existence of one station with future capacity expansions serving the entire City, it is recommended that one impact fee service area be used for the Pathways impact fee.

CASH FLOW PROJECTIONS

This section summarizes the potential cash flow to the City of Sandpoint, if the Pathways development fees are implemented at the maximum allowable amounts. The cash flow projections are based on the assumptions detailed in this study and provide an indication of the impact fee revenue and capital expenditures necessary to meet the demand for pathways brought about by new development. To the extent the rate of development either accelerates or slows down, there will be a corresponding change in impact fee revenue and capital costs. The development projections on which the cash flow summary is based can be found in the Appendix to this report.

Figure 29 provides a summary of the projected five-year cash flow from the Pathways impact fee and associated capital costs. Impact fee revenues are projected to generate an average of $29,000 per year if the fee is implemented at the maximum allowable level, for a five-year total of approximately $144,000. Five-year capital costs to serve growth are projected at approximately $145,000. Projected fee revenue covers approximately 100 percent of the capital costs.

Figure 59. Cash Flow Summary for Pathways

(Current $ in thousands)	1 2012	2 2013	3 2014	4 2015	5 2016	*5-Year Average Annual*	*5-Year Cumulative Total*
REVENUES							
TRANSPORTATION: Multi-use Pathways							
13 Pathways Fee - SFD	$15	$15	$15	$15	$16	$15	$76
14 Pathways Fee - Multifamily/Other Res	$7	$8	$8	$8	$8	$8	$38
15 Pathways Fee - Commercial	$3	$3	$3	$3	$3	$3	$14
16 Pathways Fee - Office/Instit	$2	$2	$3	$3	$3	$3	$13
17 Pathways Fee - Industrial	$1	$1	$1	$1	$1	$1	$4
Subtotal Transportation (Pathways) Fees	$28	$28	$29	$29	$30	*$29*	*$144*
CAPITAL COSTS							
TRANSPORTATION: Multi-use Pathways							
Multi-use Pathways	$27	$27	$28	$28	$29	$28	$139
Consultant Cost	$1	$1	$1	$1	$1	$1	$6
Subtotal Pathways Costs	$28	$29	$29	$29	$30	*$29*	*$145*
NET CAPITAL FACILITIES CASH FLOW- *TRANSPORTATION: Multi-use Pathways*						*Current $ in thousands*	
Annual Surplus (or Deficit)	($0)	($0)	($0)	($0)	($0)	($0)	
Cumulative Surplus (or Deficit)	($0)	($0)	($0)	($0)	($0)		($0)

PROPORTIONATE SHARE ANALYSIS

Development impact fees for the City of Sandpoint are based on reasonable and fair formulas or methods. The fees do not exceed a proportionate share of the costs incurred or to be incurred by the City in the provision of system improvements to serve new development. The City will fund non-growth related improvements with non-impact fee funds as it has in the past.

The Idaho Development Impact Fee Act includes the evaluation factors set forth in the Utah Supreme Court decision known as ***Banberry Development Corp. v. South Jordan City***. The analysis of these seven factors is discussed below.

1) The development impact fees for the City of Sandpoint are based on new growth's share of the costs of previously built projects along with planned public facilities as provided by the City of Sandpoint. Projects are included in the City's capital improvements plan and will be included in annual capital budgets.

2) The impact fee analysis and CIPs have identified potential funding shortfalls to be covered by non-development fee revenue sources. TischlerBise estimated impact fee revenue based on the maximum allowable impact fees for each functional area; results are shown in the cash flow analyses in this report. Impact fee revenue will almost entirely fund growth-related improvements.

3) The extent to which new development may have already contributed to the cost of existing public facilities has been considered. This credit is included based on amount of General Fund spent on capacity improvements for each category.

4) The relative extent to which properties will make future contributions to the cost of existing public facilities has also been evaluated in regards to existing debt. Outstanding debt for growth's portion of already constructed facilities will be paid from impact fee revenue, therefore a future revenue credit is not necessary.

5) The City will evaluate the extent to which newly developed properties are entitled to a credit for *system improvements* that have been provided by property owners or developers. These "site-specific" credits will be available for system improvements identified in the annual capital budget and long-term Capital Improvements Plans.

Administrative procedures for site-specific credits should be addressed in the development impact fee ordinance.

6) Extraordinary costs, if any, in servicing newly developed properties should be addressed through administrative procedures that allow independent studies to be submitted to the City. These procedures should be addressed in the development impact fee ordinance. One service area represented by the City of Sandpoint is appropriate for the fees herein.

7) The time-price differential inherent in fair comparisons of amounts paid at different times has been addressed. All costs in the impact fee calculations are given in current dollars with no assumed inflation rate over time. Necessary cost adjustments can be made as part of the annual evaluation and update of development impact fees.

IMPLEMENTATION AND ADMINISTRATION

The Idaho Development Impact Fee Act (hereafter referred to as the Idaho Act) requires jurisdictions to form a Development Impact Fee Advisory Committee. The committee must have at least five members with a minimum of two members active in the business of real estate, building, or development. The committee acts in an advisory capacity and is tasked to do the following[5]:

- Assist the governmental entity in adopting land use assumptions;
- Review the capital improvements plan, and proposed amendments, and file written comments;
- Monitor and evaluate implementation of the capital improvements plan;
- File periodic reports, at least annually, with respect to the capital improvements plan and report to the governmental entity any perceived inequities in implementing the plan or imposing the development impact fees; and
- Advise the governmental entity of the need to update or revise land use assumptions, the capital improvements plan, and development impact fees.

Per the above, the City has formed a Development Impact Fee Advisory Committee (DIFAC). TischlerBise and City Staff have met with the DIFAC and continue to do so throughout the process and have provided information on land use assumptions, level of service and cost assumptions, and draft impact fee schedules.

The City must develop and adopt a capital improvements plan (CIP) that includes those improvements for which fees were developed. The Idaho Act defines a capital improvement as an "improvement with a useful life of ten years or more, by new construction or other action, which increases the service capacity of a public facility."[6] Requirements for the CIP are outlined in Idaho Code 67-8208. Certain procedural requirements must be followed for adoption of the CIP and the development impact fee ordinance. Requirements are described in detail in Idaho Code 67-8206. For those infrastructure categories where incremental needs are identified, the City will need to incorporate those needs and costs in its ongoing CIP.

TischlerBise recommends that development impact fees be updated *annually* to reflect recent data. One approach is to adjust for inflation in construction costs by means of an index like the Marshall

[5] Idaho Code 67-8205.
[6] Idaho Code 67-8203.

Valuation Service or Engineering News Record (ENR). This index can be applied against the calculated impact fee. If cost estimates change significantly the City should evaluate an adjustment to the CIP and development impact fees. It has been the City's practice to do this.

Idaho's enabling legislation requires an annual development impact fees report that accounts for fees collected and spent during the preceding year (Idaho Code 67-8210). Development impact fees must be deposited in interest-bearing accounts earmarked for the associated capital facilities as outlined in capital improvements plans. Also, fees must be spent within five years of when they are collected unless the local governmental entity identifies in writing (a) a reasonable cause why the fees should be held longer than five years; and (b) an anticipated date by which the fees will be expended but in no event greater than eight years from the date they were collected.[7]

Credits must be provided for in accordance with Idaho Code Section 67-8209 regarding site-specific credits or developer reimbursements for system improvements that have been included in the impact fee calculations. Project improvements normally required as part of the development approval process are not eligible for credits against development impact fees. Specific policies and procedures related to site-specific credits or developer reimbursements for system improvements should be addressed in the ordinance that establishes the City's fees.

The general concept is that developers may be eligible for site-specific credits or reimbursements only if they provide system improvements that have been included in CIP and impact fee calculations. If a developer constructs a system improvement that was included in the fee calculations, it is necessary to either reimburse the developer or provide a credit against the fees in the area that benefits from the system improvement. The latter option is more difficult to administer because it creates unique fees for specific geographic areas. Based on TischlerBise's experience, it is better for a reimbursement agreement to be established with the developer that constructs a system improvement. For example, if a developer elects to construct a system improvement, then a reimbursement agreement can be established to payback the developer from future impact fee revenue. The reimbursement agreement should be based on the actual documented cost of the system improvement, if less than the amount shown in the CIP. However, the reimbursement should not exceed the CIP amount that has been used in the impact fee calculations.

[7] See Idaho Code 67-8210 for further detail.

NONRESIDENTIAL DEVELOPMENT CATEGORIES

Nonresidential development categories used throughout this study are based on land use classifications from the book *Trip Generation* (ITE, 2008). A summary description of each development category is provided below.

Shopping Center (820) – A shopping center is an integrated group of commercial establishments that is planned, developed, owned and managed as a unit. A shopping center provides on-site parking facilities sufficient to serve its own parking demands. Shopping centers may contain non-merchandizing facilities, such as office buildings, movie theaters, restaurants, post offices, banks, health clubs and recreational facilities. In addition to the integrated unit of shops in one building or enclosed around a mall, many shopping centers include out-parcels. For smaller centers without an enclosed mall or peripheral buildings, the Gross Leasable Area (GLA) may be the same as the Gross Floor Area (GFA) of the building.

General Office (710) – A general office building houses multiple tenants including, but not limited to, professional services, insurance companies, investment brokers and tenant services such as banking, restaurants and service retail facilities. In the impact fees study, this category is used as a proxy for institutional uses that may have more specific land use codes.

Light Industrial (110) – Light industrial facilities usually employ fewer than 500 persons and have an emphasis on activities other than manufacturing. Typical light industrial activities include, but are not limited to printing plants, material-testing laboratories and assembling of data processing equipment.

Warehousing (150) – Warehouses are primarily devoted to the storage of materials.

Manufacturing (140) – In manufacturing facilities, the primary activity is the conversion of raw materials or parts into finished products. In addition to the actual production of goods, manufacturing facilities may have office, warehouse, research, and associated functions.

APPENDIX: LAND USE ASSUMPTIONS & DEMOGRAPHICS

TischlerBise
Fiscal, Economic & Planning Consultants

4701 SANGAMORE ROAD I SUITE S240 I BETHESDA, MI
T: 800.424.4318 I F: 301.320.4860

43460 RIDGE PARK DRIVE I SUITE 200W I TEMECULA, CA 92590
T: 951.719.8478 I F: 301.320.4860

WWW.TISCHLERBISE.COM

MEMORANDUM

TO: Jeremy Grimm, Planning Director
City of Sandpoint, Idaho

FROM: Julie Herlands
TischlerBise

DATE: May 20, 2011

SUBJECT: Demographic Data and Development Projections for Impact Fee Study

---

As part of our Work Scope, TischlerBise has prepared documentation on demographic data and development projections that will be used in the Impact Fee Study. The demographic data estimates for January 1, 2011, will be used in the study calculations. The development projections are used solely for the purpose of having an understanding of the possible future pace of service demands, impact fee revenues, and capital expenditures.

The data herein are for City of Sandpoint Parks, Law Enforcement, Fire Protection, and Transportation impact fees.

Calculations throughout this technical memo are based on an analysis conducted using Excel software. Results are discussed in the memo using one-and two-digit places (in most cases), which represent rounded figures. However, the analysis itself uses figures carried to their ultimate decimal places; therefore the sums and products generated in the analysis may not equal the sum or product if the reader replicates the calculation with the factors shown in the report (due to the rounding of figures shown, not in the analysis).

CURRENT POPULATION AND HOUSING UNIT ESTIMATES

Development impact fees require an analysis of current levels of service. For residential development, current levels of service are determined using current estimates of population and housing units. To estimate current housing units in the City, TischlerBise obtained building permit information from the City of Sandpoint. This information is then used to determine a current estimate of housing units as well as to estimate current population. Residential building permit trends by type of housing unit are shown below.

Figure A1. Residential Building Permits in City of Sandpoint, 2000-2010

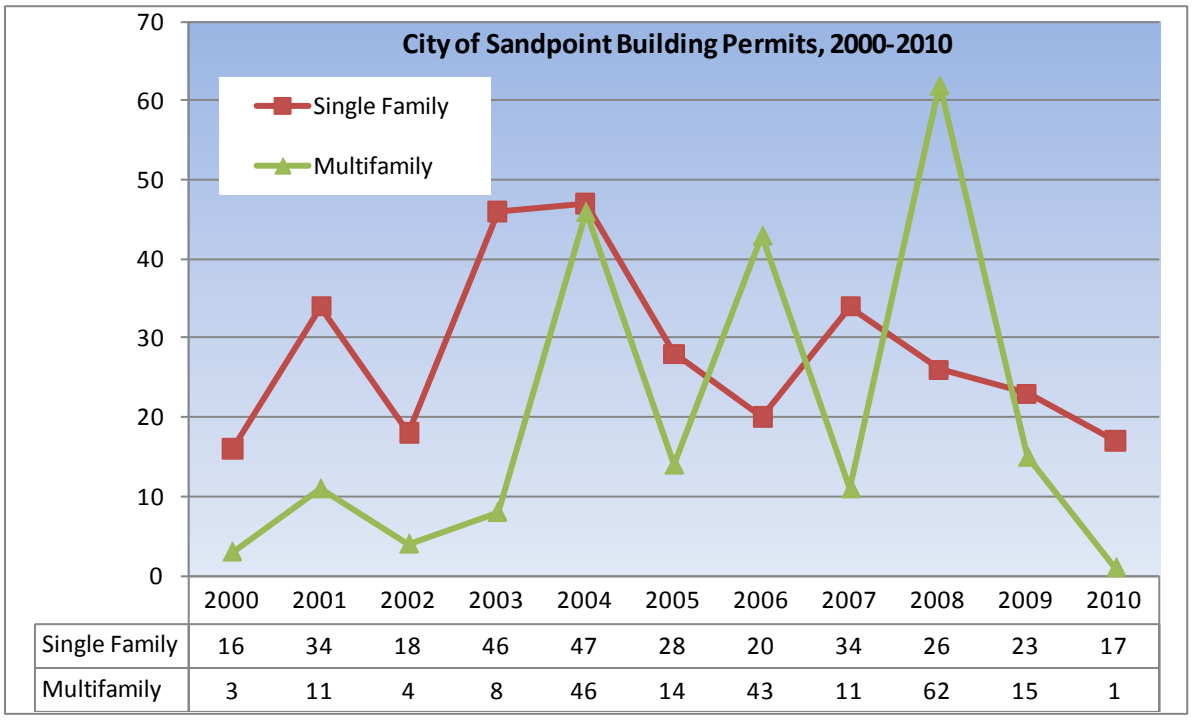

	2000	2001	2002	2003	2004	2005	2006	2007	2008	2009	2010
Single Family	16	34	18	46	47	28	20	34	26	23	17
Multifamily	3	11	4	8	46	14	43	11	62	15	1

Using the *Comprehensive Plan* base year (2006) City population of 8,206 and average household size, we estimate number of housing units in 2006 at 3,782. Using building permit data, we can estimate the growth in housing units over the last five years and the current number of housing units in the City by type of unit. Population growth over the last five years as well as the current estimated population (for 2011) is derived using housing units and persons per housing unit. The current number of housing units in the City is estimated at 4,034 with a current estimated population of 8,737. Figure A2 lists recent residential growth and the current housing unit and population estimates for the City of Sandpoint.

Based on household characteristics, TischlerBise recommends using two housing unit categories for the impact fee study: (1) Single Family Detached and (2) Multifamily. (Further discussion on housing

characteristics by housing unit type and bedroom count is provided at the end of this memo.) Recent residential growth trends in housing units and population are shown below. (See Figure A2.) The data for year 2011 will be used as the base year estimate for the Impact Fees.

Figure A2. Recent Growth in Population and Housing Units in the City of Sandpoint

		Issued during calendar year						
Building Permits		*2006**	*2007*	*2008*	*2009*	*2010*	*average*	
Single Family		20	34	26	23	17	*24*	
Multifamily		43	11	62	15	1	*26*	
Total		63	45	88	38	18	*50*	
						50.4		
		Jan 1==>					*Base Year*	
Housing Units		**2006**	**2007**	**2008**	**2009**	**2010**	**2011**	
Single Family		2,535	2,555	2,589	2,615	2,638	2,655	*66%*
Multifamily		1,247	1,290	1,301	1,363	1,378	1,379	*34%*
Total		3,782	3,845	3,890	3,978	4,016	4,034	*100%*
Population in Households	*PPHU*							
Single Family	2.19	5,552	5,596	5,670	5,727	5,777	5,815	
Multifamily	2.12	2,643	2,734	2,757	2,889	2,920	2,922	
	2.17	8,206	8,329	8,427	8,615	8,698	8,737	

** 2009 Comprehensive Plan base year population estimate*
Source: City of Sandpoint; U.S. Census; TischlerBise

Household size by type of unit from the U.S. Census American Community Survey (2005-2009) is shown in Figure A3. Household size (persons per housing unit (PPHU)) is an important demographic factor that helps account for variations in service demand by type of housing. Persons per housing unit will be held constant over the projection period since the impact fees represent a "snapshot approach" of current levels of service and costs.

Figure A3. Household Size by Type of Housing Unit, 2005-2009 US Census American Community Survey

Units in Structure	*Persons*	*Units*	*PPHU*
Single Family*	5,274	2,410	2.19
Multifamily	2,078	978	2.12
TOTAL	7,352	3,388	2.17

** Includes Manufactured Homes*

Source: US Census, American Community Survey 5-Year Estimates, 2009

POPULATION AND HOUSING UNIT PROJECTIONS

TischlerBise analyzed recent growth trends, reviewed the City of Sandpoint Comprehensive Plan, and had discussions with staff. Over the past 10 years, the City has seen an average of 48 residential building permits a year. Without year 2010, which had the lowest number of permits over the last 10 years, the average number of units increases only slightly to 50 per year. However, in a number of recent years, activity has surpassed 60 units per year. Based on these growth patterns and assuming the slow economic recovery continues at a measured pace, residential growth is projected at a 1.5 percent annual growth rate. At this pace of growth, the average annual projected increase is 70 housing units and 152 persons, over the 20-year projection period. Given the recent economic downturn and slow recovery, the projected growth is gradual in the initial years. It is assumed that the distribution between single family and multifamily units is held constant with 66 percent of the housing stock single family homes and the remainder multifamily.

Population and housing unit projections are used for the purpose of having an understanding of the possible future pace of service demands, revenues, and expenditures. As these factors will vary to the extent that future development varies, there will be virtually no effect on the actual amount of the impact fee.

Figure A4. Population and Housing Unit Projections in City of Sandpoint, 2011-2031

					Five-Year Increments ===>					*Cumulative*	*Avg. Ann.*
	Base Yr	*1*	*2*	*3*	*4*	*5*	*10*	*15*	*20*	*Increase*	*Increase*
Year=>	**2011**	**2012**	**2013**	**2014**	**2015**	**2016**	**2021**	**2026**	**2031**	***2011-2031***	***2011-2031***
SUMMARY OF DEMAND PROJECTIONS (City Limits)											
TOTAL POPULATION	8,737	8,868	9,001	9,136	9,273	9,412	10,140	10,923	11,767	**3,030**	**152**
TOTAL HOUSING UNITS	4,034	4,094	4,155	4,218	4,281	4,345	4,681	5,043	5,433	**1,399**	**70**
ANNUAL INCREASES (City Limits)	*10-11*	*11-12*	*12-13*	*13-14*	*14-15*	*15-16*	*20-21*	*25-26*	*30-31*	***Avg Annual***	
Population		131	133	135	137	139	150	161	174	**152**	
Housing Units		61	61	62	63	64	69	75	80	**70**	

Sources: City of Sandpoint; TischlerBise.

NONRESIDENTIAL DEVELOPMENT ESTIMATES AND PROJECTIONS

In addition to data on residential development, the calculation of impact fees requires data on nonresidential square footage and employment (number of jobs) in the City of Sandpoint.

TischlerBise analyzed recent employment trends in the City of Sandpoint and Bonner County. Over the last 9 years, an average of 46 percent of the County's jobs has been in the City of Sandpoint. We estimate the current number of jobs in the City of Sandpoint is 6,016, assuming a modest employment growth of .7 percent from 2010 to 2011. Results are shown below.

Figure A5. Employment Trends in Bonner County and City of Sandpoint

	2002	2003	2004	2005	2006	2007	2008	2009	2010	2011	9-yr Avg Growth	Last 5-yr avg grwth
Bonner County Jobs	11,528	11,870	12,597	13,481	13,919	14,420	13,777	12,900	12,989	*13,079*	**1.6%**	**-1.7%**
Annual growth		*3.0%*	*6.1%*	*7.0%*	*3.2%*	*3.6%*	*-4.5%*	*-6.4%*	*0.7%*	*0.7%*		
Net Jobs Increase		*342*	*727*	*884*	*438*	*501*	*(643)*	*(877)*	*89*	*90*		
City of Sandpoint Job	5,204	5,491	5,789	6,377	6,408	6,299	6,146	6,055	*5,975*	6,016	**2.3%**	**-1.3%**
Annual growth		*5.5%*	*5.4%*	*10.2%*	*0.5%*	*-1.7%*	*-2.4%*	*-1.5%*	*-1.3%*	*0.7%*		
Net Jobs Increase		*287*	*298*	*588*	*31*	*(109)*	*(153)*	*(91)*	*(80)*	*41*		
% City of County	45%	46%	46%	47%	46%	44%	45%	47%	46%	46%		
							average==>	*46%*				
Estimated				4273								

Source: US Census, OnTheMap Application and LEHD Origin-Destination Employment Statistics; Idaho Department of Labor

To estimate current nonresidential floor area in the City, TischlerBise used the above job estimate along with an average square foot per job derived from the 2005 estimate of City nonresidential floor area (from the previous impact fee study) and number of jobs in 2005. It was estimated in 2005 that the City had 5.8 million square feet of nonresidential space (occupied) and a total of 6,377 jobs. This equates to 909 square feet per job. Applying this figure to the current estimated number of jobs determines the total amount of occupied nonresidential space. Further, this space is allocated to type of land use using the distribution from the 2005 study. The estimated square footage in 2011 for each major category of nonresidential development is shown below in Figure A6.

Figure A6. Estimated Employment and Nonresidential Floor Area City of Sandpoint, 2011

2011 Total Estimated Jobs	6,016	
Gross SF per Job*	909	
2011 Nonresidential SF Estimate		5,470,348

	*Percent by Nonresidential Land Use**	*2011 Nonres Floor Area Estimate*
Commercial/Retail	*16%*	863,436
Office	*43%*	2,348,035
Industrial	*41%*	2,258,878
	100%	5,470,348

** Based on 2005 Buildout Analysis and 2005 Sandpoint employment*

Nonresidential Floor Area and Employment Projections

Future employment growth and nonresidential development in the City are projected based on information provided by City staff, TischlerBise's analysis of past trends, as well as examination of state and regional projections from the Idaho Department of Labor and Woods & Poole Economics.[8] Idaho Department of Labor projects a growth rate of 1.42 percent for the Northern Idaho Region and Woods & Poole projects a growth rate of 1.5 percent for Bonner County. To be conservative, we average the two growth rates and assume a 1.45 percent growth in employment over the projection period.

The projected increase in employment is then used to project growth in nonresidential square footage using the employee per square foot data discussed above. Results are shown in Figure A7 below.

[8] Woods & Poole Economics, Inc. is an independent firm that specializes in long-term county economic and demographic projections. Woods & Poole's database for every county in the U.S. contains projections through 2040 for more than 900 variables. Each year Woods & Poole updates the projections with new historical data.

Figure A7. Nonresidential Floor Area and Employment Projections in City of Sandpoint, 2011-2031

						Five-Year Increments ===>					Cumulative	Avg. Ann.
		Base Yr	1	2	3	4	5	10	15	20	Increase	Increase
	Year=>	2011	2012	2013	2014	2015	2016	2021	2026	2031	2011-2031	2011-2031
SUMMARY OF DEMAND PROJECTIONS (City Limits)												
NONRESIDENTIAL DEVELOPMENT												
Nonres Floor Area (1,000 SF)	*% of ttl*											
Commercial (1,000 SF)	*16%*	863	876	889	902	915	928	997	1,072	1,152	**288**	**14**
Office/Instit (1,000 SF)	*43%*	2,348	2,382	2,417	2,452	2,487	2,523	2,712	2,914	3,131	**783**	**39**
Industrial/Flex (1,000 SF)	*41%*	2,259	2,292	2,325	2,359	2,393	2,427	2,609	2,803	3,013	**754**	**38**
TOTAL		5,470	5,550	5,630	5,712	5,795	5,879	6,317	6,789	7,296	**1,825**	**91**
Employment By Type												
Commercial/Retail	21%	1,275	1,293	1,312	1,331	1,350	1,370	1,472	1,582	1,700	**425**	**21**
Office/Institutional	58%	3,467	3,517	3,568	3,620	3,672	3,725	4,003	4,302	4,623	**1,157**	**58**
Industrial/Flex	21%	1,275	1,293	1,312	1,331	1,350	1,370	1,472	1,582	1,700	**425**	**21**
TOTAL		6,016	6,103	6,192	6,282	6,373	6,465	6,948	7,466	8,023	**2,007**	**100**
									Five-Year Increments		***2011-2031***	
ANNUAL INCREASES (City Limits)		*10-11*	*11-12*	*12-13*	*13-14*	*14-15*	*15-16*	*20-21*	*25-26*	*30-31*	***Avg Annual***	
Jobs			87	88	90	91	92	99	107	115	**100**	
Nonres Floor Area (1,000 SF)			79	80	82	83	84	90	97	104	**91**	

AVERAGE DAILY VEHICLE TRIPS

Average Daily Vehicle Trips are used in several impact fee categories. Vehicle trips are estimated using average weekday vehicle trip ends from the reference book, *Trip Generation, 8TH Edition*, published by the Institute of Transportation Engineers (ITE) in 2008. A vehicle trip end represents a vehicle either entering or exiting a development (as if a traffic counter were placed across a driveway).

Trip Rate Adjustments

Trip generation rates are adjusted to avoid double counting each trip at both the origin and destination points. Therefore, the basic trip adjustment factor is 50 percent. As discussed below, additional adjustments are made to ensure the fees are proportionate to the infrastructure demand for particular types of development.

Adjustment for Journey-To-Work Commuting

Residential development in the City of Sandpoint has a larger trip adjustment factor of 61 percent to account for commuters leaving Sandpoint for work. According to the National Household Travel Survey,[9] home-based work trips are typically 31 percent of "production" trips, in other words, out-bound trips (which are 50 percent of all trip ends). Also, data from the US Census for 2009 indicates that 57 percent

[9] U.S. Department of Transportation and Federal Highway Administration, *Summary of Travel Trends: 2001 National Household Travel Survey,* December 2004 (see Table 29).

of Sandpoint's workers travel outside the City for work (see Figure A8). In combination, these factors (0.31 x 0.50 x 0.57 = 0.09) account for 9 percent of additional production trips. The total adjustment factor for residential includes attraction trips (50 percent of trip ends) plus the journey-to-work commuting adjustment (9 percent of production trips) for a total of 59 percent.

Figure A8. Adjustment for Journey-to Work Commuting

Sandpoint Workers (2009)	4,090
Sandpoint Residents Working in City (2009)	1,772
Sandpoint Residents Commuting Outside City for Work	2,318
Percent Commuting out of the City	**57%**
Additional Production Trips	9%
Residential Trip Adjustment Factor	***59%***

Source: U.S. Census, OnTheMap Application (version 5)
Longitudinal-Employer Household Dynamics (LEHD) Program; ITE

Adjustment for Pass-By Trips

The basic trip adjustment factor of 50 percent is applied to the Office/Institutional and Industrial categories. The Retail category has a trip factor of less than 50 percent because this type of development attracts vehicles as they pass-by on arterial and collector roads. For an average size shopping center, the ITE manual indicates that on average 25 percent of the vehicles that enter are passing by on their way to some other primary destination. The remaining 75 percent of attraction trips have the shopping center as their primary destination. Because attraction trips are half of all trips, the trip adjustment factor is 75 percent multiplied by 50 percent, or approximately 38 percent of the trip ends.

Estimated Vehicle Trips in Sandpoint

As an alternative to simply using the national average trip generation rate for residential development, the Institute of Transportation Engineers (ITE) publishes regression curve formulas that may be used to derive custom trip generation rates using local demographic data. Key independent variables needed for the analysis (i.e., vehicles available, housing units, households and persons) are available from the U.S. Census Bureau American Community Survey (ACS) 2005-2009 data for Sandpoint. This data was used to derive custom average weekday vehicle trip ends by type of housing, as shown below.

Figure A9. Average Weekday Vehicle Trip Ends by Housing Type in City of Sandpoint

City of Sandpoint, ID		Households (2)			Vehicles per
	Vehicles Available (1)	Single Family Units	Multifamily Units	Total	Household by Tenure
Owner-occupied	3,028	1,501	54	1,555	1.95
Renter-occupied	1,904	589	765	1,354	1.41
TOTAL	***4,932***	***2,090***	***819***	***2,909***	***1.70***
Housing Units (6) =>		2,410	978	3,388	
Persons per Housing Unit =>		*2.19*	*2.12*		

	Persons (3)	Trip Ends (4)	Vehicles by Type of Housing	Trip Ends (5)	**Average Trip Ends**	**Trip Ends per Housing Unit**	ITE Trip Ends Per Unit	Difference from ITE
Single Family Units	5,274	13,588	3,751	21,690	17,639	7.30	9.57	-24%
Multifamily Units	2,078	7,146	1,181	4,946	6,046	6.20	6.65	-7%
TOTAL	7,352	20,734	4,932	26,636	23,685	7.00		

(1) Vehicles available by tenure from Table B25046, American Community Survey, 2005-2009.
(2) Households by tenure and units in structure from Table B25032, American Community Survey, 2005-2009.
(3) Persons by units in structure from Table B25033, American Community Survey, 2005-2009.
(4) Vehicle trips ends based on persons using formulas from Trip Generation (ITE 2008). For single family housing (ITE 210), the fitted curve equation is EXP(0.91*LN(persons)+1.52). To approximate the average population of the ITE studies, persons were divided by 9 and the equation result multiplied by 9. For multifamily housing (ITE 220), the fitted curve equation is (3.47*persons)-64.48.
(5) Vehicle trip ends based on vehicles available using formulas from Trip Generation (ITE 2008). For single family housing (ITE 210), the fitted curve equation is EXP(0.99*LN(vehicles)+1.81). To approximate the average number of vehicles in the ITE studies, vehicles available were divided by 15 and the equation result multiplied by 15. For multifamily housing (ITE 220), the fitted curve equation is (3.94*vehicles)+293.58.
(6) Housing units from Table B25024, American Community Survey, 2005-2009.

As shown, a single family detached unit has an average daily trip rate of 7.30 per unit (compared to 9.57 from ITE) and a multifamily unit has an average daily trip rate of 6.20 trips per unit (compared to 6.65 per unit from ITE). Using this data, average daily trips in the City can be derived.

As shown in Figure A10 there is an average of 47,807 vehicle trips generated by existing development in Sandpoint on an average weekday. As the table indicates, residential development is estimated to generate 16,478 vehicle trips (34 percent) compared to 31,329 vehicle trips (65 percent) generated by nonresidential development. An example of the calculation is as follows for single family detached units: 2,655 single family units x 7.30 vehicle trips per day per unit x 59% adjustment factor = 11,435 total vehicle trips per day from single family units in the City. The same calculation is done for each land use type.

Figure A10. Average Daily Trips from Existing Development in City of Sandpoint

Residential Vehicle Trips on an Average Weekday (2011)		
Residential Units	*Assumptions*	
Single Family Detached	2,655	
Multifamily	1,379	
Average Weekday Vehicle Trip Ends per Unit*	*Trip Rate*	*Trip Factor*
Single Family Detached	7.30	59%
Multifamily	6.20	59%
Residential Vehicle Trip Ends of an Average Weekday		
Single Family	11,435	
Multifamily	5,043	*% of total*
Total Residential Trips	**16,478**	***34%***

Nonresidential Vehicle Trips on an Average Weekday (2011)		
Nonresidential Gross Floor Area (1,000 sq. ft.)	*Assumptions*	
Commercial/Retail	863	
Office/Institutional	2,348	
Industrial/Flex	2,259	
Average Weekday Vehicle Trips Ends per 1,000 Sq. Ft.**	*Trip Rate*	*Trip Factor*
Commercial	42.94	38%
Office/Institutional	11.01	50%
Industrial/Flex	3.82	50%
Nonresidential Vehicle Trips on an Average Weekday		
Commercial	14,089	
Office/Institutional	12,926	
Industrial/Flex	4,314	
Total Nonresidential Trips	**31,329**	***66%***
TOTAL TRIPS	**47,807**	***100%***

**Trip rates are customized for City of Sandpoint. See accompanying tables and discussion.*
***Trip rates are from the Institute of Transportation Engineers (ITE) Trip Generation Manual (2008)*

DEMAND INDICATORS BY SIZE OF DETACHED HOUSING

As part of the impact fee effort for the City of Sandpoint, we further analyzed demographic data in an effort to potentially refine the impact fee schedule to be more progressive for residential development. This can be done by developing fees by size of housing unit by bedroom count. Household size and vehicle trip rates can be derived using custom tabulations of demographic data by bedroom range from survey responses provided by the U.S. Census Bureau in files known as Public Use Micro-data Samples (PUMS). TischlerBise used American Community Survey (ACS) 5-Year 2005-2009 data to derive persons per housing unit by number of bedrooms as well as number of vehicle trips per unit by number of bedrooms. Because PUMS data are only available for areas of roughly 100,000 persons, the City of

Sandpoint is in Idaho Public Use Micro-data Area (PUMA) 00100, which covers the counties of Benewah, Bonner, Boundary, Kootenai, and Shoshone. Data is first analyzed for the PUMA area and then calibrated to conditions in the City of Sandpoint.

As shown in Figure A11, TischlerBise derived trip generation rates and average persons, by bedroom range, using the number of persons and vehicles available. Recommended multipliers were scaled to make the average value by type of housing for Idaho PUMA 00100 match the average value derived from ACS data specific to Sandpoint. As shown, as number of bedrooms increases, trip ends and persons per unit increase as well.

Figure A11. Average Persons and Trip Ends by Bedroom Range in City of Sandpoint

	Persons (1)	Trip Ends (2)	Vehicles Available (1)	Trip Ends (3)	Average Trip Ends	Housing Units (1)	Recommended Multipliers for Sandpoint (4) Trip Ends per Housing Unit	Persons per Housing Unit
Single Family 0-2 Bdrms	2,093	6,205	1,130	6,613	6,409	1,416	5.83	1.52
Single Family 3 Bdrms	4,413	12,234	1,811	10,548	11,391	1,975	7.43	2.29
Single Family 4 Bdrms	2,011	5,984	671	3,947	4,965	735	8.71	2.81
Single Family 5+ Bdrms	830	2,674	236	1,403	2,039	254	10.35	3.35
Single Family Subtotal	*9,347*	*27,098*	*3,848*	*22,511*	*24,804*	*4,380*	*7.30*	*2.19*
Multifamily Subtotal	*757*	*2,562*	*425*	*1,968*	2,265	*481*	*6.20*	*2.12*
GRAND TOTAL	10,104	29,660	4,273	24,479	27,070	4,861		

(1) American Community Survey, Public Use Microdata Sample for ID PUMA 00100 (unweighted data for 2005-2009).
(2) Vehicle trips ends based on persons using formulas from Trip Generation (ITE 2008). For single family housing (ITE 210), the fitted curve equation is EXP(0.91*LN(persons)+1.52). To approximate the average population in the ITE studies, persons were divided by 17 and the equation result multiplied by 17.
(3) Vehicle trip ends based on vehicles available using formulas from Trip Generation (ITE 2008). For single family housing (ITE 210), the fitted curve equation is EXP(0.99*LN(vehicles)+1.81). To approximate the average number of vehicles in the ITE studies, vehicles available were divided by 15 and the equation result multiplied by 15.
(4) Recommended multipliers are scaled to make the average value by type of housing for ID PUMA 00100 match the average value for Sandpoint, derived from American Community Survey 2005-2009 data, with persons adjusted to the Citywide average of 2.19 persons per housing unit.

SUMMARY

Annual demographic and development projections for the study are summarized in Figure A12 below. Demographic data estimates for 2011 are used in the impact fee calculations. The development *projections* are used for the purpose of having an understanding of the future pace of service demands and cash flows resulting from revenues and expenditures associated with those service demands.

As analysis continues on the impact fees, additional demographic analysis may need to occur particularly for the Area of City Impact (ACI). This memo will be revised as such to reflect this additional information if necessary and will be included in the final report as an Appendix.

Figure A12. Annual Demand Projections, 2011-2031, City of Sandpoint

																			Five-Year Increments ==		Cumulative	Avg. Ann.
			Base Yr	1	2	3	4	5	6	7	8	9	10	11	12	13	14	15	20		Increase	Increase
	Year=>		2011	2012	2013	2014	2015	2016	2017	2018	2019	2020	2021	2022	2023	2024	2025	2026	2031		2011-2031	2011-2031
SUMMARY OF DEMAND PROJECTIONS (City Limits)																						
TOTAL POPULATION			8,737	8,868	9,001	9,136	9,273	9,412	9,553	9,697	9,842	9,990	10,140	10,292	10,446	10,603	10,762	10,923	11,767		**3,030**	**152**
TOTAL HOUSING UNITS			4,034	4,094	4,155	4,218	4,281	4,345	4,410	4,477	4,544	4,612	4,681	4,751	4,823	4,895	4,968	5,043	5,433		**1,399**	**70**
TOTAL JOBS			6,016	6,103	6,192	6,282	6,373	6,465	6,559	6,654	6,751	6,848	6,948	7,048	7,151	7,254	7,359	7,466	8,023		**2,007**	**100**
TOTAL POPULATION AND JOBS			14,753	14,971	15,193	15,418	15,646	15,877	16,112	16,351	16,593	16,838	17,087	17,340	17,597	17,857	18,121	18,390	19,791		**5,038**	**252**
Jobs to Population Ratio			0.69	0.69	0.69	0.69	0.69	0.69	0.69	0.69	0.69	0.69	0.69	0.68	0.68	0.68	0.68	0.68	0.68			
RESIDENTIAL DEVELOPMENT																						
Population			8,737	8,868	9,001	9,136	9,273	9,412	9,553	9,697	9,842	9,990	10,140	10,292	10,446	10,603	10,762	10,923	11,767		**3,030**	**152**
Housing Units	*Unit Mix*																					
Single Family Detached	*66%*		2,655	2,695	2,735	2,776	2,818	2,860	2,903	2,947	2,991	3,036	3,081	3,127	3,174	3,222	3,270	3,319	3,576		**921**	**46**
Multifamily	*34%*		1,379	1,399	1,420	1,442	1,463	1,485	1,507	1,530	1,553	1,576	1,600	1,624	1,648	1,673	1,698	1,723	1,857		**478**	**24**
TOTAL			4,034	4,094	4,155	4,218	4,281	4,345	4,410	4,477	4,544	4,612	4,681	4,751	4,823	4,895	4,968	5,043	5,433		**1,399**	**70**
NONRESIDENTIAL DEVELOPMENT																						
Nonres Floor Area (1,000 SF)	*% of ttl*																					
Commercial (1,000 SF)	*16%*		863	876	889	902	915	928	941	955	969	983	997	1,012	1,026	1,041	1,056	1,072	1,152		**288**	**14**
Office/Instit (1,000 SF)	*43%*		2,348	2,382	2,417	2,452	2,487	2,523	2,560	2,597	2,635	2,673	2,712	2,751	2,791	2,831	2,872	2,914	3,131		**783**	**39**
Industrial/Flex (1,000 SF)	*41%*		2,259	2,292	2,325	2,359	2,393	2,427	2,463	2,498	2,535	2,571	2,609	2,646	2,685	2,724	2,763	2,803	3,013		**754**	**38**
TOTAL			5,470	5,550	5,630	5,712	5,795	5,879	5,964	6,050	6,138	6,227	6,317	6,409	6,502	6,596	6,692	6,789	7,296		**1,825**	**91**
Employment By Type																						
Commercial/Retail	21%		1,275	1,293	1,312	1,331	1,350	1,370	1,390	1,410	1,430	1,451	1,472	1,493	1,515	1,537	1,559	1,582	1,700		**425**	**21**
Office/Institutional	58%		3,467	3,517	3,568	3,620	3,672	3,725	3,779	3,834	3,890	3,946	4,003	4,061	4,120	4,180	4,241	4,302	4,623		**1,157**	**58**
Industrial/Flex	21%		1,275	1,293	1,312	1,331	1,350	1,370	1,390	1,410	1,430	1,451	1,472	1,493	1,515	1,537	1,559	1,582	1,700		**425**	**21**
TOTAL			6,016	6,103	6,192	6,282	6,373	6,465	6,559	6,654	6,751	6,848	6,948	7,048	7,151	7,254	7,359	7,466	8,023		**2,007**	**100**
VEHICLE TRIPS																						
Residential Trips	*Trip Rates*	*Adj. %*																				
Single Family Detached	*7.30*	*59%*	11,435	11,607	11,781	11,958	12,137	12,319	12,504	12,691	12,882	13,075	13,271	13,470	13,672	13,877	14,085	14,297	15,402		**3,966**	**198**
Multifamily	*6.20*	*59%*	5,043	5,118	5,195	5,273	5,352	5,432	5,514	5,597	5,681	5,766	5,852	5,940	6,029	6,120	6,211	6,305	6,792		**1,749**	**87**
TOTAL Residential Trips			16,478	16,725	16,976	17,231	17,489	17,751	18,018	18,288	18,562	18,841	19,123	19,410	19,701	19,997	20,297	20,601	22,193		**5,715**	**286**
Nonresidential Trips																						
Commercial (1,000 SF)	*42.94*	*38%*	14,089	14,293	14,500	14,711	14,924	15,140	15,360	15,583	15,809	16,038	16,270	16,506	16,746	16,988	17,235	17,485	18,790		**4,701**	**235**
Office/Instit (1,000 SF)	*11.01*	*50%*	12,926	13,113	13,304	13,496	13,692	13,891	14,092	14,296	14,504	14,714	14,927	15,144	15,363	15,586	15,812	16,041	17,239		**4,313**	**216**
Industrial/Flex (1,000 SF)	*3.82*	*50%*	4,314	4,377	4,440	4,505	4,570	4,636	4,704	4,772	4,841	4,911	4,982	5,055	5,128	5,202	5,278	5,354	5,754		**1,440**	**72**
TOTAL Nonresidential Trips			31,329	31,784	32,244	32,712	33,186	33,667	34,156	34,651	35,153	35,663	36,180	36,705	37,237	37,777	38,325	38,880	41,782		**10,453**	**523**
GRAND TOTAL Trips			47,807	48,509	49,220	49,943	50,675	51,419	52,173	52,939	53,716	54,504	55,303	56,115	56,938	57,774	58,621	59,482	63,976		**48,241**	**2,412**

																		Five-Year Increments ==	2011-2031
ANNUAL INCREASES (City Limits)	*10-11*	*11-12*	*12-13*	*13-14*	*14-15*	*15-16*	*16-17*	*17-18*	*18-19*	*19-20*	*20-21*	*21-22*	*22-23*	*23-24*	*24-25*	*25-26*	*30-31*		Avg Annual
Population		131	133	135	137	139	141	143	145	148	150	152	154	157	159	161	174		**152**
Housing Units		61	61	62	63	64	65	66	67	68	69	70	71	72	73	75	80		**70**
Jobs		87	88	90	91	92	94	95	96	98	99	101	102	104	105	107	115		**100**
Nonres Floor Area (1,000 SF)		79	80	82	83	84	85	86	88	89	90	92	93	94	96	97	104		**91**

Figure A13. Annual Demand Projections Chart, 2011-2031

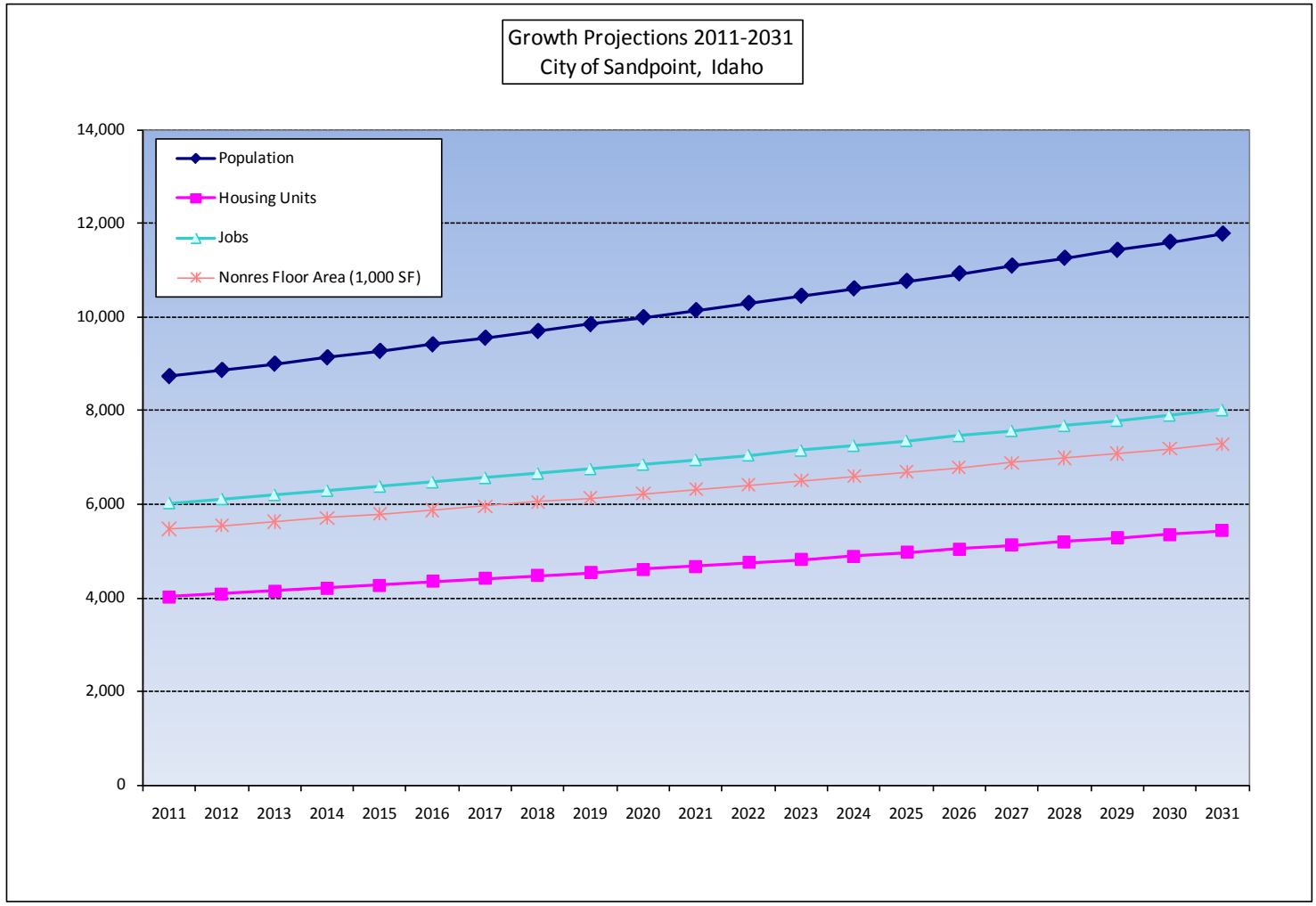

AGENDA REPORT

City Council Meeting

TODAY'S DATE: 6/26/2024

MEETING DATE: 7/3/2024

TO: MAYOR AND CITY COUNCIL

FROM: Maeve Nevins-Lavtar, Park Planning & Development Manager

SUBJECT: Request to Approve Contract Change Order No 1 to Agreement No. A24-5300-6 with Ginno Construction Co. for Travers Park Playground & Splash Pad Project

DESCRIPTION/BACKGROUND:

City staff recommends the approval of Change Order No. 1 to Agreement No. A24-5300-6 between the City of Sandpoint and Ginno Construction Co. for construction services for Travers Park Playground & Splash Pad Project.

The justification for the Change Order No. 1 request is derived from the desire by City Leadership to include additional alternative items into the construction contract, which were identified and described in the bid documents and specification. These items are intended to enhance the park user experience from a more inclusive, sustainable and equitable design approach.

Funding for this project is from the Parks and Recreation Capital Improvement Fund and the Land Water Conservation Fund Grant.

BUDGET OVERVIEW:

Original Contract Amount: $881,000
Change Order No. 1: $106,000
New Contract Amount: $987,000

Original Project Budget *(including Design, Owner Supplied Equipment, Construction)*::	$1,122,336.00
Total Additional Park Funds Used:	$192,706.00
New Project Budget	**$1,315,042.00**

STAFF RECOMMENDATION:

Staff recommends that City Council consider approving Change Order No. 1 to Agreement No. A24-5300-6 with Ginno Construction Co. for Travers Park Playground & Splash Pad Project

ACTION:

Staff requests Council approve Change Order No. 1 to Agreement No. A24-5300-6 with Ginno Construction Co. for Travers Park Playground & Splash Pad Project

WILL THERE BE ANY FINANCIAL IMPACT? Yes **HAS THIS ITEM BEEN BUDGETED?** No

Funding for this Change Order No. 1 will be provided by unused FY24 Parks Capital Improvement Funds.

ATTACHMENTS:

Proposed Resolution

Contract Agreement No. A24-5300-6

Bid Documents and Add Alternative Descriptions

Change Order No. 1

No: 24-
Date: July 3, 2024

RESOLUTION
OF THE CITY COUNCIL
CITY OF SANDPOINT

TITLE: CHANGE ORDER NO. 1 TO AGREEMENT WITH GINNO CONSTRUCTION OF IDAHO, INC., FOR CONSTRUCTION OF INCLUSIVE PLAYGROUND AND SPLASH PAD AT TRAVERS PARK (CITY AGREEMENT NO. A24-5300-6)

WHEREAS: On June 5, 2024, City Council awarded the contract for construction of an inclusive playground and splash pad at Travers Park to Ginno Construction of Idaho, Inc., under City Agreement No. A24-5300-6;

WHEREAS: At this time, a change order is requested and recommended by City staff in order to include additional alternative items into the construction contract, which were identified and described in the bid documents and specification and are intended to enhance the park user experience from a more inclusive, sustainable and equitable design approach;

WHEREAS: Approval of this Change Order No. 1 will result in an additional $106,000 and a new total contract amount of $987,000; and

WHEREAS: Funding for this project comes from the City of Sandpoint Parks and Recreation Capital Improvement Fund and the Land Water Conservation Fund Grant.

NOW, THEREFORE, BE IT RESOLVED THAT: Change Order No. 1 to Agreement with Ginno Construction of Idaho, Inc., for Construction of Inclusive Playground and Splash Pad at Travers Park (City Agreement No. A24-5300-6), a copy of which is attached hereto and made a part hereof as if fully incorporated herein, is hereby approved.

BE IT FURTHER RESOLVED THAT: As set forth in the Procurement Process and Signature Authority Policy for Goods, Services, and Construction and further outlined in the City of Sandpoint Procurement Policy, on behalf of the City, the Mayor or his designee is hereby authorized to execute this change order.

_____
Jeremy Grimm, Mayor

ATTEST:

_____
Melissa Ward, City Clerk

DocuSign Envelope ID: 50A304D9-E951-407F-9E8A-CA4431EEDE6C

CITY OF SANDPOINT
Infrastructure & Development Services
CONTRACT CHANGE ORDER

Date: 7/2/2024

Travers Park Playground & Splash Pad Construction

Change Order No: **1**

Contractor: Ginno Construction, Inc.

Project No: **A24-5300-6**

This change order shall be full payment and final settlement of all claims for Contract time and for all costs of any kind, including costs of delays and inefficiency, related to any Work either covered or affected by the change, including all direct, indirect, impact, reduced productivity, costs due to extended schedule duration and any other claim by Contractor. By signing this change order, the Contractor waives any additional entitlement to additional compensation or schedule extension.

The following changes to the contract documents are issued:

Item No.	*Description*	*Change In Contract Price*
1	***Scope:***	
	Splash Pad Irrigation Booster Pump	**$70,000.00**
	Justification: Contract Change Order Splash Pad was originally designed to be a recirculating system which would result in significant staff maintenance & added costs. At the direction of Mayor Grimm, the design team was asked to design an optional alternative reusable water system that could store and filter the grey water from the splash pad for re-use as landscape irrigation. This item was described and identified in the bid documents as "Add Alt Bid Item No. 2.0". See attached bid documents for more details.	
2	***Scope:***	
	Construction of North Hill-Berm Landscape Feature, Asphalt Perimeter Path, Plaza, Installation of Owner Furnished/Contractor Installed Outdoor Music Equipment.	**$15,000.00**
	Justification: The community design feedback resulted in an optional "natural play area", hill and perimeter trail. These items were described and identified in the bid documents as "Add Alt Bid Item No. 3.0". See attached bid documents for more details.	
3	***Scope:***	
	Construction of North Hill Embankment Boulder Retaining Feature, Installation of Owner Provided Embankment ADA "Roller" Slide, Concrete Curb, and Playground Engineered Wood Fiber Safety Surfacing.	**$21,000.00**
	Justification: Contract Change Order In addition to an asphalt access pathway, the new embankment area will include a plaza at the top, an ADA accessible roller slide with transfer station at the bottom, and boulders for alternate access to top of slide. Nature play area will be framed by a concrete curb, and the safety surfacing will include engineered wood fiber. These items were described and identified in the bid documents as "Add Alt Bid Item No. 4.0". See attached bid documents for more details.	

Original Contract Amount:	*$881,000.00*
Change Order #1:	*$106,000.00*
Sub-total:	*$987,000.00*
Total Change Order Price:	**$106,000.00**
New Contract Price:	**$987,000.00**

Time provided for completion in the contract is:

*[**X**] unchanged, [ ] increased, [ ] decreased by [**0**] calendar days.*

*The Substantial Completion date for this contract is December 20**, 2024**.*

This document will become an amendment to the contract and all provisions of the contract will apply hereto.

Accepted By: DocuSigned by: Rich Wells 7E1A19A6080E45E... Rich Wells President 6/27/2024

Contractor (Ginno Construction Co.) Date

Recommended By: DocuSigned by: Maeve Nevins-Lavtar BCC4A4CFBB3483... Maeve Nevins-Lavtar Lavtar, Park Planning & Dev. Manager 6/27/2024

City of Sandpoint, Project Manager Date

Approved By: DocuSigned by: Jason Welker 5D27C376BA9F4DA... Jason Welker 6/27/2024

City of Sandpoint, Community Planning & Development Director Date

Approved By:

Mayor Date

Reviewed By:

Grants Administrator	DocuSigned by: Cheryl Hughes 04CB7620B84F46D...	Date 6/27/2024

AGREEMENT BETWEEN OWNER AND CONTRACTOR FOR CONSTRUCTION CONTRACT (STIPULATED PRICE)

This Agreement is by and between City of Sandpoint, Idaho ("Owner") and Ginno Construction of Idaho, Inc. ("Contractor").

Terms used in this Agreement have the meanings stated in the General Conditions and the Supplementary Conditions.

Owner and Contractor hereby agree as follows:

ARTICLE 1—WORK

1.01 Contractor shall complete all Work as specified or indicated in the Contract Documents. The Work is generally described as follows:

A. Construction of a new inclusive playground with play equipment and playground protective surfacing, splash pad elements, water storage tank and irrigation pump, utilities, landscape, and irrigation.

ARTICLE 2—THE PROJECT

2.01 The Project, of which the Work under the Contract Documents is a part, is generally described as follows:

1. City of Sandpoint – TRAVERS PARK PLAYGROUND & SPLASH PAD CONSTRUCTION.

ARTICLE 3—ENGINEER

3.01 The Owner will assume all duties and responsibilities of Engineer, and have rights and authority assigned to Engineer in the Contract.

3.02 The project has been designed by the Owner's consultant Michael Terrell – Landscape Architecture, PLLC

ARTICLE 4—CONTRACT TIMES

4.01 *Time is of the Essence*

A. All time limits for Milestones, if any, Substantial Completion, and completion and readiness for final payment as stated in the Contract Documents are of the essence of the Contract.

4.02 *Contract Times: Dates*

A. The Work will be substantially complete on or before **December 20, 2024**, and completed and ready for final payment in accordance with Paragraph 15.06 of the General Conditions on or before **June 13, 2025**.

4.05 *Liquidated Damages*

A. Contractor and Owner recognize that time is of the essence as stated in Paragraph 4.01 above and that Owner will suffer financial loss if the Work is not completed within the times specified in Paragraph 4.02 above plus any extensions thereof allowed in accordance with

Article 12 of the General Conditions. The parties also recognize the delays, expense, and difficulties involved in proving in a legal or arbitration proceeding the actual loss suffered by Owner if the Work is not completed on time. Accordingly, instead of requiring any such proof, Owner and Contractor agree that as liquidated damages for delay (but not as a penalty):

1. *Substantial Completion:* Contractor shall pay Owner $500.00 for each day that expires after the time (as duly adjusted pursuant to the Contract) specified above for Substantial Completion, until the Work is substantially complete.

2. *Completion of Remaining Work:* After Substantial Completion, if Contractor shall neglect, refuse, or fail to complete the remaining Work within the Contract Times (as duly adjusted pursuant to the Contract) for completion and readiness for final payment, Contractor shall pay Owner $250.00 for each day that expires after such time until the Work is completed and ready for final payment.

B. If Owner recovers liquidated damages for a delay in completion by Contractor, then such liquidated damages are Owner's sole and exclusive remedy for such delay, and Owner is precluded from recovering any other damages, whether actual, direct, excess, or consequential, for such delay, except for special damages (if any) specified in this Agreement.

ARTICLE 5—CONTRACT PRICE

5.01 Owner shall pay Contractor for completion of the Work in accordance with the Contract Documents, the amounts that follow, subject to adjustment under the Contract:

A. For all Work, at the prices stated in Contractor's Bid, attached hereto as an exhibit.

ARTICLE 6—PAYMENT PROCEDURES

6.01 *Submittal and Processing of Payments*

A. Contractor shall submit Applications for Payment in accordance with Article 15 of the General Conditions. Applications for Payment will be processed by Engineer as provided in the General Conditions.

6.02 *Progress Payments; Retainage*

A. Owner shall make progress payments on the basis of Contractor's Applications for Payment on or about the 30th day of each month during performance of the Work as provided in Paragraph 6.02.A.1 below, provided that such Applications for Payment have been submitted in a timely manner and otherwise meet the requirements of the Contract. All such payments will be measured by the Schedule of Values established as provided in the General Conditions (and in the case of Unit Price Work based on the number of units completed) or, in the event there is no Schedule of Values, as provided elsewhere in the Contract.

1. Prior to Substantial Completion, progress payments will be made in an amount equal to the percentage indicated below but, in each case, less the aggregate of payments previously made and less such amounts as Owner may withhold, including but not limited to liquidated damages, in accordance with the Contract.

a. 95 percent of the value of the Work completed (with the balance being retainage).

b. 95 percent of cost of materials and equipment not incorporated in the Work (with the balance being retainage).

B. Upon Substantial Completion, Owner shall pay an amount sufficient to increase total payments to Contractor to 95 percent of the Work completed, less such amounts set off by Owner pursuant to Paragraph 15.01.E of the General Conditions.

6.03 *Final Payment*

A. Upon final completion and acceptance of the Work, Owner shall pay the remainder of the Contract Price in accordance with Paragraph 15.06 of the General Conditions.

6.04 *Consent of Surety*

A. Owner will not make final payment, or return or release retainage at Substantial Completion or any other time, unless Contractor submits written consent of the surety to such payment, return, or release.

6.05 *Interest*

A. All amounts not paid when due will bear interest at the rate of 6% percent per annum.

ARTICLE 7—CONTRACT DOCUMENTS

7.01 *Contents*

A. The Contract Documents consist of all of the following:

1. This Agreement.
2. Bonds:
    a. Performance bond (together with power of attorney).
    b. Payment bond (together with power of attorney).
3. Standard General Conditions, EJCDC C-700 (2018 Edition).
4. Supplementary Conditions.
5. Technical Specifications and Specifications (not attached but incorporated by reference) consisting of the Idaho Standards for Public Works Construction (ISPWC – 2020 Edition), excluding Division 100.
6. Federal Form FHWA-1273 -Required Contract Provisions – Federal-Aid Construction Contracts – Davis Bacon does not apply to this contract
7. Special Provisions-None
8. Drawings
9. Addenda (numbers **1 to 2**, inclusive).
10. Contractor's Bid
11. The following which may be delivered or issued on or after the Effective Date of the Contract and are not attached hereto:
    a. Notice to Proceed.
    b. Work Change Directives.
    c. Change Orders.

d. Field Orders.

e. Warranty Bond, if any.

12. In the event of inconsistency between the Contract Documents, the Contract Documents shall be interpreted in accordance with the listed priorities set forth in this provision, i.e, requirements of item 1 shall supersede all lower ranked items.

B. The Contract Documents listed in Paragraph 7.01.A are attached to this Agreement (except as expressly noted otherwise above).

C. There are no Contract Documents other than those listed above in this Article 7.

D. The Contract Documents may only be amended, modified, or supplemented as provided in the Contract.

ARTICLE 8—REPRESENTATIONS, CERTIFICATIONS, AND STIPULATIONS

8.01 *Contractor's Representations*

A. In order to induce Owner to enter into this Contract, Contractor makes the following representations:

1. Contractor has examined and carefully studied the Contract Documents, including Addenda.

2. Contractor has visited the Site, conducted a thorough visual examination of the Site and adjacent areas, and become familiar with the general, local, and Site conditions that may affect cost, progress, and performance of the Work.

3. Contractor is familiar with all Laws and Regulations that may affect cost, progress, and performance of the Work.

4. Contractor has carefully studied the drawings of physical conditions relating to existing surface or subsurface structures at the Site that have been identified in the Supplementary Conditions, with respect to the drawings.

5. Contractor has considered the information known to Contractor itself; information commonly known to contractors doing business in the locality of the Site; information and observations obtained from visits to the Site; the Contract Documents; and the Technical Data identified in the Supplementary Conditions or by definition, with respect to the effect of such information, observations, and Technical Data on (a) the cost, progress, and performance of the Work; (b) the means, methods, techniques, sequences, and procedures of construction to be employed by Contractor; and (c) Contractor's safety precautions and programs.

6. Based on the information and observations referred to in the preceding paragraph, Contractor agrees that no further examinations, investigations, explorations, tests, studies, or data are necessary for the performance of the Work at the Contract Price, within the Contract Times, and in accordance with the other terms and conditions of the Contract.

7. Contractor is aware of the general nature of work to be performed by Owner and others at the Site that relates to the Work as indicated in the Contract Documents.

8. Contractor has given Engineer written notice of all conflicts, errors, ambiguities, or discrepancies that Contractor has discovered in the Contract Documents, and of discrepancies between Site conditions and the Contract Documents, and the written resolution thereof by Engineer is acceptable to Contractor.
9. The Contract Documents are generally sufficient to indicate and convey understanding of all terms and conditions for performance and furnishing of the Work.
10. Contractor's entry into this Contract constitutes an incontrovertible representation by Contractor that without exception all prices in the Agreement are premised upon performing and furnishing the Work required by the Contract Documents.
11. The Contractor is an appropriately licensed public works contractor per Idaho Code Section 54-1902.
12. Contractor shall comply with all Laws and Regulations applicable to the performance of the Work. Except where otherwise expressly required by applicable Laws and Regulations, neither Owner nor Engineer shall be responsible for monitoring the Contractor's compliance with any Laws or Regulations.
13. Contractor shall comply with Build America Buy America Act and additional provisions as outlined in Federal Form FHWA-1273, the "Required Contract provisions – Federal-Aid Construction Contracts with the exception of Section IV – Davis Bacon and Related Act Provisions, as this Act is not applicable to this project.

8.02 *Contractor's Certifications*

A. Contractor certifies that it has not engaged in corrupt, fraudulent, collusive, or coercive practices in competing for or in executing the Contract. For the purposes of this Paragraph 8.02:
   1. "corrupt practice" means the offering, giving, receiving, or soliciting of anything of value likely to influence the action of a public official in the bidding process or in the Contract execution;
   2. "fraudulent practice" means an intentional misrepresentation of facts made (a) to influence the bidding process or the execution of the Contract to the detriment of Owner, (b) to establish Bid or Contract prices at artificial non-competitive levels, or (c) to deprive Owner of the benefits of free and open competition;
   3. "collusive practice" means a scheme or arrangement between two or more Bidders, with or without the knowledge of Owner, a purpose of which is to establish Bid prices at artificial, non-competitive levels; and
   4. "coercive practice" means harming or threatening to harm, directly or indirectly, persons or their property to influence their participation in the bidding process or affect the execution of the Contract.

B. Contractor certifies the contractor is not suspended or disbarred from participating in covered transactions with the Federal Government.

IN WITNESS WHEREOF, Owner and Contractor have signed this Agreement.

This Agreement will be effective on June 6, 2024 (which is the Effective Date of the Contract).

Owner:	Contractor:
City of Sandpoint *(typed or printed name of organization)*	Ginno Construction of Idaho, Inc. *(typed or printed name of organization)*
By: _____ *(individual's signature)*	By: _____ *(individual's signature)*
Date: 6/5/24 *(date signed)*	Date: 05/31/2024 *(date signed)*
Name: Jeremy Grimm *(typed or printed)*	Name: Rich Wells *(typed or printed)*
Title: Mayor *(typed or printed)*	Title: President *(typed or printed)*
	*(If **[Type of Entity]** is a corporation, a partnership, or a joint venture, attach evidence of authority to sign.)*
Attest: _____ *(individual's signature)*	Attest: _____ *(individual's signature)*
Title: City Clerk *(typed or printed)*	Title: _____ *(typed or printed)*
Address for giving notices:	Address for giving notices:
City Clerk	Ginno Construction Co.
1123 Lake Street	3873 N. Schreiber Way
Sandpoint, ID 83864	Coeur d' Alene, ID 83815
Designated Representative:	Designated Representative:
Name: Maeve Nevins-Lavtar *(typed or printed)*	Name: Cory Quan *(typed or printed)*
Title: Development Manager *(typed or printed)*	Title: Project Manager *(typed or printed)*
Address:	Address:
1123 Lake Street	Same as above
Sandpoint, ID 83864	
Phone: (208) 946-2711	Phone: 208 667 5560
Email: mnevinslavtar@sandpointidaho.gov	Email: cory@ginnoconstruction.com
*(If **[Type of Entity]** is a corporation, attach evidence of authority to sign. If **[Type of Entity]** is a public body, attach evidence of authority to sign and resolution or other documents authorizing execution of this Agreement.)*	License No.: N/A *(where applicable)* State: N/A

THIS PAGE WAS INTENTIONALLY LEFT BLANK

STANDARD GENERAL CONDITIONS OF THE CONSTRUCTION CONTRACT

TABLE OF CONTENTS

Page

Article 1—Definitions and Terminology 1
1.01 Defined Terms 1
1.02 Terminology 6
Article 2—Preliminary Matters 7
2.01 Delivery of Performance and Payment Bonds; Evidence of Insurance 7
2.02 Copies of Documents 7
2.03 Before Starting Construction 7
2.04 Preconstruction Conference; Designation of Authorized Representatives 8
2.05 Acceptance of Schedules 8
2.06 Electronic Transmittals 8
Article 3—Contract Documents: Intent, Requirements, Reuse 9
3.01 Intent 9
3.02 Reference Standards 9
3.03 Reporting and Resolving Discrepancies 10
3.04 Requirements of the Contract Documents 10
3.05 Reuse of Documents 11
Article 4—Commencement and Progress of the Work 11
4.01 Commencement of Contract Times; Notice to Proceed 11
4.02 Starting the Work 11
4.03 Reference Points 11
4.04 Progress Schedule 12
4.05 Delays in Contractor's Progress 12
Article 5—Site; Subsurface and Physical Conditions; Hazardous Environmental Conditions 13
5.01 Availability of Lands 13
5.02 Use of Site and Other Areas 14
5.03 Subsurface and Physical Conditions 15
5.04 Differing Subsurface or Physical Conditions 16

EJCDC® C-700, Standard General Conditions of the Construction Contract.
Copyright© 2018 National Society of Professional Engineers, American Council of Engineering Companies, and American Society of Civil Engineers. All rights reserved.

5.05 Underground Facilities 17
5.06 Hazardous Environmental Conditions at Site 19
Article 6—Bonds and Insurance 21
6.01 Performance, Payment, and Other Bonds 21
6.02 Insurance—General Provisions 22
6.03 Contractor's Insurance 24
6.04 Builder's Risk and Other Property Insurance 25
6.05 Property Losses; Subrogation 25
6.06 Receipt and Application of Property Insurance Proceeds 27
Article 7—Contractor's Responsibilities 27
7.01 Contractor's Means and Methods of Construction 27
7.02 Supervision and Superintendence 27
7.03 Labor; Working Hours 27
7.04 Services, Materials, and Equipment 28
7.05 "Or Equals" 28
7.06 Substitutes 29
7.07 Concerning Subcontractors and Suppliers 31
7.08 Patent Fees and Royalties 32
7.09 Permits 33
7.10 Taxes 33
7.11 Laws and Regulations 33
7.12 Record Documents 33
7.13 Safety and Protection 34
7.14 Hazard Communication Programs 35
7.15 Emergencies 35
7.16 Submittals 35
7.17 Contractor's General Warranty and Guarantee 38
7.18 Indemnification 39
7.19 Delegation of Professional Design Services 39
Article 8—Other Work at the Site 40
8.01 Other Work 40
8.02 Coordination 41
8.03 Legal Relationships 41

EJCDC® C-700, Standard General Conditions of the Construction Contract.
Copyright© 2018 National Society of Professional Engineers, American Council of Engineering Companies, and American Society of Civil Engineers. All rights reserved.

Article 9—Owner's Responsibilities 42
9.01 Communications to Contractor 42
9.02 Replacement of Engineer 42
9.03 Furnish Data 42
9.04 Pay When Due 42
9.05 Lands and Easements; Reports, Tests, and Drawings 43
9.06 Insurance 43
9.07 Change Orders 43
9.08 Inspections, Tests, and Approvals 43
9.09 Limitations on Owner's Responsibilities 43
9.10 Undisclosed Hazardous Environmental Condition 43
9.11 Evidence of Financial Arrangements 43
9.12 Safety Programs 43
Article 10—Engineer's Status During Construction 44
10.01 Owner's Representative 44
10.02 Visits to Site 44
10.03 Resident Project Representative 44
10.04 Engineer's Authority 44
10.05 Determinations for Unit Price Work 45
10.06 Decisions on Requirements of Contract Documents and Acceptability of Work 45
10.07 Limitations on Engineer's Authority and Responsibilities 45
10.08 Compliance with Safety Program 45
Article 11—Changes to the Contract 46
11.01 Amending and Supplementing the Contract 46
11.02 Change Orders 46
11.03 Work Change Directives 46
11.04 Field Orders 47
11.05 Owner-Authorized Changes in the Work 47
11.06 Unauthorized Changes in the Work 47
11.07 Change of Contract Price 47
11.08 Change of Contract Times 49
11.09 Change Proposals 49
11.10 Notification to Surety 50

Copyright© 2018 National Society of Professional Engineers, American Council of Engineering Companies, and American Society of Civil Engineers. All rights reserved.

Article 12—Claims 50
12.01 Claims 50
Article 13—Cost of the Work; Allowances; Unit Price Work 51
13.01 Cost of the Work 51
13.02 Allowances 55
13.03 Unit Price Work 55
Article 14—Tests and Inspections; Correction, Removal, or Acceptance of Defective Work 56
14.01 Access to Work 56
14.02 Tests, Inspections, and Approvals 56
14.03 Defective Work 57
14.04 Acceptance of Defective Work 58
14.05 Uncovering Work 58
14.06 Owner May Stop the Work 58
14.07 Owner May Correct Defective Work 59
Article 15—Payments to Contractor; Set-Offs; Completion; Correction Period 59
15.01 Progress Payments 59
15.02 Contractor's Warranty of Title 62
15.03 Substantial Completion 62
15.04 Partial Use or Occupancy 63
15.05 Final Inspection 64
15.06 Final Payment 64
15.07 Waiver of Claims 65
15.08 Correction Period 66
Article 16—Suspension of Work and Termination 67
16.01 Owner May Suspend Work 67
16.02 Owner May Terminate for Cause 67
16.03 Owner May Terminate for Convenience 68
16.04 Contractor May Stop Work or Terminate 68
Article 17—Final Resolution of Disputes 69
17.01 Methods and Procedures 69
Article 18—Miscellaneous 69
18.01 Giving Notice 69
18.02 Computation of Times 69

EJCDC® C-700, Standard General Conditions of the Construction Contract.
Copyright© 2018 National Society of Professional Engineers, American Council of Engineering Companies, and American Society of Civil Engineers. All rights reserved.

18.03 Cumulative Remedies 70
18.04 Limitation of Damages 70
18.05 No Waiver 70
18.06 Survival of Obligations 70
18.07 Controlling Law 70
18.08 Assignment of Contract 70
18.09 Successors and Assigns 70
18.10 Headings 70

EJCDC® C-700, Standard General Conditions of the Construction Contract.
Copyright© 2018 National Society of Professional Engineers, American Council of Engineering Companies, and American Society of Civil Engineers. All rights reserved.

STANDARD GENERAL CONDITIONS OF THE CONSTRUCTION CONTRACT

ARTICLE 1—DEFINITIONS AND TERMINOLOGY

1.01 *Defined Terms*

A. Wherever used in the Bidding Requirements or Contract Documents, a term printed with initial capital letters, including the term's singular and plural forms, will have the meaning indicated in the definitions below. In addition to terms specifically defined, terms with initial capital letters in the Contract Documents include references to identified articles and paragraphs, and the titles of other documents or forms.

1. *Addenda*—Written or graphic instruments issued prior to the opening of Bids which clarify, correct, or change the Bidding Requirements or the proposed Contract Documents.

2. *Agreement*—The written instrument, executed by Owner and Contractor, that sets forth the Contract Price and Contract Times, identifies the parties and the Engineer, and designates the specific items that are Contract Documents.

3. *Application for Payment*—The document prepared by Contractor, in a form acceptable to Engineer, to request progress or final payments, and which is to be accompanied by such supporting documentation as is required by the Contract Documents.

4. *Bid*—The offer of a Bidder submitted on the prescribed form setting forth the prices for the Work to be performed.

5. *Bidder*—An individual or entity that submits a Bid to Owner.

6. *Bidding Documents*—The Bidding Requirements, the proposed Contract Documents, and all Addenda.

7. *Bidding Requirements*—The Advertisement or invitation to bid, Instructions to Bidders, Bid Bond or other Bid security, if any, the Bid Form, and the Bid with any attachments.

8. *Change Order*—A document which is signed by Contractor and Owner and authorizes an addition, deletion, or revision in the Work or an adjustment in the Contract Price or the Contract Times, or other revision to the Contract, issued on or after the Effective Date of the Contract.

9. *Change Proposal*—A written request by Contractor, duly submitted in compliance with the procedural requirements set forth herein, seeking an adjustment in Contract Price or Contract Times; contesting an initial decision by Engineer concerning the requirements of the Contract Documents or the acceptability of Work under the Contract Documents; challenging a set-off against payments due; or seeking other relief with respect to the terms of the Contract.

10. *Claim*

a. A demand or assertion by Owner directly to Contractor, duly submitted in compliance with the procedural requirements set forth herein, seeking an adjustment of Contract Price or Contract Times; contesting an initial decision by Engineer concerning the

Copyright© 2018 National Society of Professional Engineers, American Council of Engineering Companies, and American Society of Civil Engineers. All rights reserved.

requirements of the Contract Documents or the acceptability of Work under the Contract Documents; contesting Engineer's decision regarding a Change Proposal; seeking resolution of a contractual issue that Engineer has declined to address; or seeking other relief with respect to the terms of the Contract.

b. A demand or assertion by Contractor directly to Owner, duly submitted in compliance with the procedural requirements set forth herein, contesting Engineer's decision regarding a Change Proposal, or seeking resolution of a contractual issue that Engineer has declined to address.

c. A demand or assertion by Owner or Contractor, duly submitted in compliance with the procedural requirements set forth herein, made pursuant to Paragraph 12.01.A.4, concerning disputes arising after Engineer has issued a recommendation of final payment.

d. A demand for money or services by a third party is not a Claim.

11. *Constituent of Concern*—Asbestos, petroleum, radioactive materials, polychlorinated biphenyls (PCBs), lead-based paint (as defined by the HUD/EPA standard), hazardous waste, and any substance, product, waste, or other material of any nature whatsoever that is or becomes listed, regulated, or addressed pursuant to Laws and Regulations regulating, relating to, or imposing liability or standards of conduct concerning, any hazardous, toxic, or dangerous waste, substance, or material.

12. *Contract*—The entire and integrated written contract between Owner and Contractor concerning the Work.

13. *Contract Documents*—Those items so designated in the Agreement, and which together comprise the Contract.

14. *Contract Price*—The money that Owner has agreed to pay Contractor for completion of the Work in accordance with the Contract Documents.

15. *Contract Times*—The number of days or the dates by which Contractor shall: (a) achieve Milestones, if any; (b) achieve Substantial Completion; and (c) complete the Work.

16. *Contractor*—The individual or entity with which Owner has contracted for performance of the Work.

17. *Cost of the Work*—See Paragraph 13.01 for definition.

18. *Drawings*—The part of the Contract that graphically shows the scope, extent, and character of the Work to be performed by Contractor.

19. *Effective Date of the Contract*—The date, indicated in the Agreement, on which the Contract becomes effective.

20. *Electronic Document*—Any Project-related correspondence, attachments to correspondence, data, documents, drawings, information, or graphics, including but not limited to Shop Drawings and other Submittals, that are in an electronic or digital format.

21. *Electronic Means*—Electronic mail (email), upload/download from a secure Project website, or other communications methods that allow: (a) the transmission or communication of Electronic Documents; (b) the documentation of transmissions, including sending and receipt; (c) printing of the transmitted Electronic Document by the

EJCDC® C-700, Standard General Conditions of the Construction Contract.
Copyright© 2018 National Society of Professional Engineers, American Council of Engineering Companies, and American Society of Civil Engineers. All rights reserved.

recipient; (d) the storage and archiving of the Electronic Document by sender and recipient; and (e) the use by recipient of the Electronic Document for purposes permitted by this Contract. Electronic Means does not include the use of text messaging, or of Facebook, Twitter, Instagram, or similar social media services for transmission of Electronic Documents.

22. *Engineer*—The individual or entity named as such in the Agreement.

23. *Field Order*—A written order issued by Engineer which requires minor changes in the Work but does not change the Contract Price or the Contract Times.

24. *Hazardous Environmental Condition*—The presence at the Site of Constituents of Concern in such quantities or circumstances that may present a danger to persons or property exposed thereto.

    a. The presence at the Site of materials that are necessary for the execution of the Work, or that are to be incorporated into the Work, and that are controlled and contained pursuant to industry practices, Laws and Regulations, and the requirements of the Contract, is not a Hazardous Environmental Condition.

    b. The presence of Constituents of Concern that are to be removed or remediated as part of the Work is not a Hazardous Environmental Condition.

    c. The presence of Constituents of Concern as part of the routine, anticipated, and obvious working conditions at the Site, is not a Hazardous Environmental Condition.

25. *Laws and Regulations; Laws or Regulations*—Any and all applicable laws, statutes, rules, regulations, ordinances, codes, and binding decrees, resolutions, and orders of any and all governmental bodies, agencies, authorities, and courts having jurisdiction.

26. *Liens*—Charges, security interests, or encumbrances upon Contract-related funds, real property, or personal property.

27. *Milestone*—A principal event in the performance of the Work that the Contract requires Contractor to achieve by an intermediate completion date, or by a time prior to Substantial Completion of all the Work.

28. *Notice of Award*—The written notice by Owner to a Bidder of Owner's acceptance of the Bid.

29. *Notice to Proceed*—A written notice by Owner to Contractor fixing the date on which the Contract Times will commence to run and on which Contractor shall start to perform the Work.

30. *Owner*—The individual or entity with which Contractor has contracted regarding the Work, and which has agreed to pay Contractor for the performance of the Work, pursuant to the terms of the Contract.

31. *Progress Schedule*—A schedule, prepared and maintained by Contractor, describing the sequence and duration of the activities comprising Contractor's plan to accomplish the Work within the Contract Times.

32. *Project*—The total undertaking to be accomplished for Owner by engineers, contractors, and others, including planning, study, design, construction, testing, commissioning, and start-up, and of which the Work to be performed under the Contract Documents is a part.

EJCDC® C-700, Standard General Conditions of the Construction Contract.
Copyright© 2018 National Society of Professional Engineers, American Council of Engineering Companies, and American Society of Civil Engineers. All rights reserved.

33. *Resident Project Representative*—The authorized representative of Engineer assigned to assist Engineer at the Site. As used herein, the term Resident Project Representative (RPR) includes any assistants or field staff of Resident Project Representative.

34. *Samples*—Physical examples of materials, equipment, or workmanship that are representative of some portion of the Work and that establish the standards by which such portion of the Work will be judged.

35. *Schedule of Submittals*—A schedule, prepared and maintained by Contractor, of required submittals and the time requirements for Engineer's review of the submittals.

36. *Schedule of Values*—A schedule, prepared and maintained by Contractor, allocating portions of the Contract Price to various portions of the Work and used as the basis for reviewing Contractor's Applications for Payment.

37. *Shop Drawings*—All drawings, diagrams, illustrations, schedules, and other data or information that are specifically prepared or assembled by or for Contractor and submitted by Contractor to illustrate some portion of the Work. Shop Drawings, whether approved or not, are not Drawings and are not Contract Documents.

38. *Site*—Lands or areas indicated in the Contract Documents as being furnished by Owner upon which the Work is to be performed, including rights-of-way and easements, and such other lands or areas furnished by Owner which are designated for the use of Contractor.

39. *Specifications*—The part of the Contract that consists of written requirements for materials, equipment, systems, standards, and workmanship as applied to the Work, and certain administrative requirements and procedural matters applicable to the Work.

40. *Subcontractor*—An individual or entity having a direct contract with Contractor or with any other Subcontractor for the performance of a part of the Work.

41. *Submittal*—A written or graphic document, prepared by or for Contractor, which the Contract Documents require Contractor to submit to Engineer, or that is indicated as a Submittal in the Schedule of Submittals accepted by Engineer. Submittals may include Shop Drawings and Samples; schedules; product data; Owner-delegated designs; sustainable design information; information on special procedures; testing plans; results of tests and evaluations, source quality-control testing and inspections, and field or Site quality-control testing and inspections; warranties and certifications; Suppliers' instructions and reports; records of delivery of spare parts and tools; operations and maintenance data; Project photographic documentation; record documents; and other such documents required by the Contract Documents. Submittals, whether or not approved or accepted by Engineer, are not Contract Documents. Change Proposals, Change Orders, Claims, notices, Applications for Payment, and requests for interpretation or clarification are not Submittals.

42. *Substantial Completion*—The time at which the Work (or a specified part thereof) has progressed to the point where, in the opinion of Engineer, the Work (or a specified part thereof) is sufficiently complete, in accordance with the Contract Documents, so that the Work (or a specified part thereof) can be utilized for the purposes for which it is intended. The terms "substantially complete" and "substantially completed" as applied to all or part of the Work refer to Substantial Completion of such Work.

Copyright© 2018 National Society of Professional Engineers, American Council of Engineering Companies, and American Society of Civil Engineers. All rights reserved.

43. *Successful Bidder*—The Bidder to which the Owner makes an award of contract.

44. *Supplementary Conditions*—The part of the Contract that amends or supplements these General Conditions.

45. *Supplier*—A manufacturer, fabricator, supplier, distributor, or vendor having a direct contract with Contractor or with any Subcontractor to furnish materials or equipment to be incorporated in the Work by Contractor or a Subcontractor.

46. *Technical Data*

    a. Those items expressly identified as Technical Data in the Supplementary Conditions, with respect to either (1) existing subsurface conditions at or adjacent to the Site, or existing physical conditions at or adjacent to the Site including existing surface or subsurface structures (except Underground Facilities) or (2) Hazardous Environmental Conditions at the Site.

    b. If no such express identifications of Technical Data have been made with respect to conditions at the Site, then Technical Data is defined, with respect to conditions at the Site under Paragraphs 5.03, 5.04, and 5.06, as the data contained in boring logs, recorded measurements of subsurface water levels, assessments of the condition of subsurface facilities, laboratory test results, and other factual, objective information regarding conditions at the Site that are set forth in any geotechnical, environmental, or other Site or facilities conditions report prepared for the Project and made available to Contractor.

    c. Information and data regarding the presence or location of Underground Facilities are not intended to be categorized, identified, or defined as Technical Data, and instead Underground Facilities are shown or indicated on the Drawings.

47. *Underground Facilities*—All active or not-in-service underground lines, pipelines, conduits, ducts, encasements, cables, wires, manholes, vaults, tanks, tunnels, or other such facilities or systems at the Site, including but not limited to those facilities or systems that produce, transmit, distribute, or convey telephone or other communications, cable television, fiber optic transmissions, power, electricity, light, heat, gases, oil, crude oil products, liquid petroleum products, water, steam, waste, wastewater, storm water, other liquids or chemicals, or traffic or other control systems. An abandoned facility or system is not an Underground Facility.

48. *Unit Price Work*—Work to be paid for on the basis of unit prices.

49. *Work*—The entire construction or the various separately identifiable parts thereof required to be provided under the Contract Documents. Work includes and is the result of performing or providing all labor, services, and documentation necessary to produce such construction; furnishing, installing, and incorporating all materials and equipment into such construction; and may include related services such as testing, start-up, and commissioning, all as required by the Contract Documents.

50. *Work Change Directive*—A written directive to Contractor issued on or after the Effective Date of the Contract, signed by Owner and recommended by Engineer, ordering an addition, deletion, or revision in the Work.

EJCDC® C-700, Standard General Conditions of the Construction Contract.
Copyright© 2018 National Society of Professional Engineers, American Council of Engineering Companies, and American Society of Civil Engineers. All rights reserved.

1.02 *Terminology*

A. The words and terms discussed in Paragraphs 1.02.B, C, D, and E are not defined terms that require initial capital letters, but, when used in the Bidding Requirements or Contract Documents, have the indicated meaning.

B. *Intent of Certain Terms or Adjectives*: The Contract Documents include the terms "as allowed," "as approved," "as ordered," "as directed" or terms of like effect or import to authorize an exercise of professional judgment by Engineer. In addition, the adjectives "reasonable," "suitable," "acceptable," "proper," "satisfactory," or adjectives of like effect or import are used to describe an action or determination of Engineer as to the Work. It is intended that such exercise of professional judgment, action, or determination will be solely to evaluate, in general, the Work for compliance with the information in the Contract Documents and with the design concept of the Project as a functioning whole as shown or indicated in the Contract Documents (unless there is a specific statement indicating otherwise). The use of any such term or adjective is not intended to and shall not be effective to assign to Engineer any duty or authority to supervise or direct the performance of the Work, or any duty or authority to undertake responsibility contrary to the provisions of Article 10 or any other provision of the Contract Documents.

C. *Day*: The word "day" means a calendar day of 24 hours measured from midnight to the next midnight.

D. *Defective*: The word "defective," when modifying the word "Work," refers to Work that is unsatisfactory, faulty, or deficient in that it:

1. does not conform to the Contract Documents;

2. does not meet the requirements of any applicable inspection, reference standard, test, or approval referred to in the Contract Documents; or

3. has been damaged prior to Engineer's recommendation of final payment (unless responsibility for the protection thereof has been assumed by Owner at Substantial Completion in accordance with Paragraph 15.03 or Paragraph 15.04).

E. *Furnish, Install, Perform, Provide*

1. The word "furnish," when used in connection with services, materials, or equipment, means to supply and deliver said services, materials, or equipment to the Site (or some other specified location) ready for use or installation and in usable or operable condition.

2. The word "install," when used in connection with services, materials, or equipment, means to put into use or place in final position said services, materials, or equipment complete and ready for intended use.

3. The words "perform" or "provide," when used in connection with services, materials, or equipment, means to furnish and install said services, materials, or equipment complete and ready for intended use.

4. If the Contract Documents establish an obligation of Contractor with respect to specific services, materials, or equipment, but do not expressly use any of the four words "furnish," "install," "perform," or "provide," then Contractor shall furnish and install said services, materials, or equipment complete and ready for intended use.

Copyright© 2018 National Society of Professional Engineers, American Council of Engineering Companies, and American Society of Civil Engineers. All rights reserved.

F. *Contract Price or Contract Times*: References to a change in "Contract Price or Contract Times" or "Contract Times or Contract Price" or similar, indicate that such change applies to (1) Contract Price, (2) Contract Times, or (3) both Contract Price and Contract Times, as warranted, even if the term "or both" is not expressed.

G. Unless stated otherwise in the Contract Documents, words or phrases that have a well-known technical or construction industry or trade meaning are used in the Contract Documents in accordance with such recognized meaning.

ARTICLE 2—PRELIMINARY MATTERS

2.01 *Delivery of Performance and Payment Bonds; Evidence of Insurance*

A. *Performance and Payment Bonds*: When Contractor delivers the signed counterparts of the Agreement to Owner, Contractor shall also deliver to Owner the performance bond and payment bond (if the Contract requires Contractor to furnish such bonds).

B. *Evidence of Contractor's Insurance*: When Contractor delivers the signed counterparts of the Agreement to Owner, Contractor shall also deliver to Owner, with copies to each additional insured (as identified in the Contract), the certificates, endorsements, and other evidence of insurance required to be provided by Contractor in accordance with Article 6, except to the extent the Supplementary Conditions expressly establish other dates for delivery of specific insurance policies.

C. *Evidence of Owner's Insurance*: After receipt of the signed counterparts of the Agreement and all required bonds and insurance documentation, Owner shall promptly deliver to Contractor, with copies to each additional insured (as identified in the Contract), the certificates and other evidence of insurance required to be provided by Owner under Article 6.

2.02 *Copies of Documents*

A. Owner shall furnish to Contractor four printed copies of the Contract (including one fully signed counterpart of the Agreement), and one copy in electronic portable document format (PDF). Additional printed copies will be furnished upon request at the cost of reproduction.

B. Owner shall maintain and safeguard at least one original printed record version of the Contract, including Drawings and Specifications signed and sealed by Engineer and other design professionals. Owner shall make such original printed record version of the Contract available to Contractor for review. Owner may delegate the responsibilities under this provision to Engineer.

2.03 *Before Starting Construction*

A. *Preliminary Schedules*: Within 10 days after the Effective Date of the Contract (or as otherwise required by the Contract Documents), Contractor shall submit to Engineer for timely review:

1. a preliminary Progress Schedule indicating the times (numbers of days or dates) for starting and completing the various stages of the Work, including any Milestones specified in the Contract;

2. a preliminary Schedule of Submittals; and

3. a preliminary Schedule of Values for all of the Work which includes quantities and prices of items which when added together equal the Contract Price and subdivides the Work

Copyright© 2018 National Society of Professional Engineers, American Council of Engineering Companies, and American Society of Civil Engineers. All rights reserved.

into component parts in sufficient detail to serve as the basis for progress payments during performance of the Work. Such prices will include an appropriate amount of overhead and profit applicable to each item of Work.

2.04 *Preconstruction Conference; Designation of Authorized Representatives*

A. Before any Work at the Site is started, a conference attended by Owner, Contractor, Engineer, and others as appropriate will be held to establish a working understanding among the parties as to the Work, and to discuss the schedules referred to in Paragraph 2.03.A, procedures for handling Shop Drawings, Samples, and other Submittals, processing Applications for Payment, electronic or digital transmittals, and maintaining required records.

B. At this conference Owner and Contractor each shall designate, in writing, a specific individual to act as its authorized representative with respect to the services and responsibilities under the Contract. Such individuals shall have the authority to transmit and receive information, render decisions relative to the Contract, and otherwise act on behalf of each respective party.

2.05 *Acceptance of Schedules*

A. At least 10 days before submission of the first Application for Payment a conference, attended by Contractor, Engineer, and others as appropriate, will be held to review the schedules submitted in accordance with Paragraph 2.03.A. No progress payment will be made to Contractor until acceptable schedules are submitted to Engineer.

1. The Progress Schedule will be acceptable to Engineer if it provides an orderly progression of the Work to completion within the Contract Times. Such acceptance will not impose on Engineer responsibility for the Progress Schedule, for sequencing, scheduling, or progress of the Work, nor interfere with or relieve Contractor from Contractor's full responsibility therefor.

2. Contractor's Schedule of Submittals will be acceptable to Engineer if it provides a workable arrangement for reviewing and processing the required submittals.

3. Contractor's Schedule of Values will be acceptable to Engineer as to form and substance if it provides a reasonable allocation of the Contract Price to the component parts of the Work.

4. If a schedule is not acceptable, Contractor will have an additional 10 days to revise and resubmit the schedule.

2.06 *Electronic Transmittals*

A. Except as otherwise stated elsewhere in the Contract, the Owner, Engineer, and Contractor may send, and shall accept, Electronic Documents transmitted by Electronic Means.

B. If the Contract does not establish protocols for Electronic Means, then Owner, Engineer, and Contractor shall jointly develop such protocols.

C. Subject to any governing protocols for Electronic Means, when transmitting Electronic Documents by Electronic Means, the transmitting party makes no representations as to long-term compatibility, usability, or readability of the Electronic Documents resulting from the recipient's use of software application packages, operating systems, or computer hardware differing from those used in the drafting or transmittal of the Electronic Documents.

Copyright© 2018 National Society of Professional Engineers, American Council of Engineering Companies, and American Society of Civil Engineers. All rights reserved.

ARTICLE 3—CONTRACT DOCUMENTS: INTENT, REQUIREMENTS, REUSE

3.01 *Intent*

A. The Contract Documents are complementary; what is required by one Contract Document is as binding as if required by all.

B. It is the intent of the Contract Documents to describe a functionally complete Project (or part thereof) to be constructed in accordance with the Contract Documents.

C. Unless otherwise stated in the Contract Documents, if there is a discrepancy between the electronic versions of the Contract Documents (including any printed copies derived from such electronic versions) and the printed record version, the printed record version will govern.

D. The Contract supersedes prior negotiations, representations, and agreements, whether written or oral.

E. Engineer will issue clarifications and interpretations of the Contract Documents as provided herein.

F. Any provision or part of the Contract Documents held to be void or unenforceable under any Law or Regulation will be deemed stricken, and all remaining provisions will continue to be valid and binding upon Owner and Contractor, which agree that the Contract Documents will be reformed to replace such stricken provision or part thereof with a valid and enforceable provision that comes as close as possible to expressing the intention of the stricken provision.

G. Nothing in the Contract Documents creates:

1. any contractual relationship between Owner or Engineer and any Subcontractor, Supplier, or other individual or entity performing or furnishing any of the Work, for the benefit of such Subcontractor, Supplier, or other individual or entity; or

2. any obligation on the part of Owner or Engineer to pay or to see to the payment of any money due any such Subcontractor, Supplier, or other individual or entity, except as may otherwise be required by Laws and Regulations.

3.02 *Reference Standards*

A. *Standards Specifications, Codes, Laws and Regulations*

1. Reference in the Contract Documents to standard specifications, manuals, reference standards, or codes of any technical society, organization, or association, or to Laws or Regulations, whether such reference be specific or by implication, means the standard specification, manual, reference standard, code, or Laws or Regulations in effect at the time of opening of Bids (or on the Effective Date of the Contract if there were no Bids), except as may be otherwise specifically stated in the Contract Documents.

2. No provision of any such standard specification, manual, reference standard, or code, and no instruction of a Supplier, will be effective to change the duties or responsibilities of Owner, Contractor, or Engineer from those set forth in the part of the Contract Documents prepared by or for Engineer. No such provision or instruction shall be effective to assign to Owner or Engineer any duty or authority to supervise or direct the performance of the Work, or any duty or authority to undertake responsibility

Copyright© 2018 National Society of Professional Engineers, American Council of Engineering Companies, and American Society of Civil Engineers. All rights reserved.

inconsistent with the provisions of the part of the Contract Documents prepared by or for Engineer.

3.03 *Reporting and Resolving Discrepancies*

A. *Reporting Discrepancies*

1. *Contractor's Verification of Figures and Field Measurements*: Before undertaking each part of the Work, Contractor shall carefully study the Contract Documents, and check and verify pertinent figures and dimensions therein, particularly with respect to applicable field measurements. Contractor shall promptly report in writing to Engineer any conflict, error, ambiguity, or discrepancy that Contractor discovers, or has actual knowledge of, and shall not proceed with any Work affected thereby until the conflict, error, ambiguity, or discrepancy is resolved by a clarification or interpretation by Engineer, or by an amendment or supplement to the Contract issued pursuant to Paragraph 11.01.

2. *Contractor's Review of Contract Documents*: If, before or during the performance of the Work, Contractor discovers any conflict, error, ambiguity, or discrepancy within the Contract Documents, or between the Contract Documents and (a) any applicable Law or Regulation, (b) actual field conditions, (c) any standard specification, manual, reference standard, or code, or (d) any instruction of any Supplier, then Contractor shall promptly report it to Engineer in writing. Contractor shall not proceed with the Work affected thereby (except in an emergency as required by Paragraph 7.15) until the conflict, error, ambiguity, or discrepancy is resolved, by a clarification or interpretation by Engineer, or by an amendment or supplement to the Contract issued pursuant to Paragraph 11.01.

3. Contractor shall not be liable to Owner or Engineer for failure to report any conflict, error, ambiguity, or discrepancy in the Contract Documents unless Contractor had actual knowledge thereof.

B. *Resolving Discrepancies*

1. Except as may be otherwise specifically stated in the Contract Documents, the provisions of the part of the Contract Documents prepared by or for Engineer take precedence in resolving any conflict, error, ambiguity, or discrepancy between such provisions of the Contract Documents and:

a. the provisions of any standard specification, manual, reference standard, or code, or the instruction of any Supplier (whether or not specifically incorporated by reference as a Contract Document); or

b. the provisions of any Laws or Regulations applicable to the performance of the Work (unless such an interpretation of the provisions of the Contract Documents would result in violation of such Law or Regulation).

3.04 *Requirements of the Contract Documents*

A. During the performance of the Work and until final payment, Contractor and Owner shall submit to the Engineer in writing all matters in question concerning the requirements of the Contract Documents (sometimes referred to as requests for information or interpretation—RFIs), or relating to the acceptability of the Work under the Contract Documents, as soon as possible after such matters arise. Engineer will be the initial interpreter of the requirements of the Contract Documents, and judge of the acceptability of the Work.

Copyright© 2018 National Society of Professional Engineers, American Council of Engineering Companies, and American Society of Civil Engineers. All rights reserved.

B. Engineer will, with reasonable promptness, render a written clarification, interpretation, or decision on the issue submitted, or initiate an amendment or supplement to the Contract Documents. Engineer's written clarification, interpretation, or decision will be final and binding on Contractor, unless it appeals by submitting a Change Proposal, and on Owner, unless it appeals by filing a Claim.

C. If a submitted matter in question concerns terms and conditions of the Contract Documents that do not involve (1) the performance or acceptability of the Work under the Contract Documents, (2) the design (as set forth in the Drawings, Specifications, or otherwise), or (3) other engineering or technical matters, then Engineer will promptly notify Owner and Contractor in writing that Engineer is unable to provide a decision or interpretation. If Owner and Contractor are unable to agree on resolution of such a matter in question, either party may pursue resolution as provided in Article 12.

3.05 *Reuse of Documents*

A. Contractor and its Subcontractors and Suppliers shall not:

1. have or acquire any title to or ownership rights in any of the Drawings, Specifications, or other documents (or copies of any thereof) prepared by or bearing the seal of Engineer or its consultants, including electronic media versions, or reuse any such Drawings, Specifications, other documents, or copies thereof on extensions of the Project or any other project without written consent of Owner and Engineer and specific written verification or adaptation by Engineer; or

2. have or acquire any title or ownership rights in any other Contract Documents, reuse any such Contract Documents for any purpose without Owner's express written consent, or violate any copyrights pertaining to such Contract Documents.

B. The prohibitions of this Paragraph 3.05 will survive final payment, or termination of the Contract. Nothing herein precludes Contractor from retaining copies of the Contract Documents for record purposes.

ARTICLE 4—COMMENCEMENT AND PROGRESS OF THE WORK

4.01 *Commencement of Contract Times; Notice to Proceed*

A. The Contract Times will commence to run on the 30th day after the Effective Date of the Contract or, if a Notice to Proceed is given, on the day indicated in the Notice to Proceed. A Notice to Proceed may be given at any time within 30 days after the Effective Date of the Contract. In no event will the Contract Times commence to run later than the 60th day after the day of Bid opening or the 30th day after the Effective Date of the Contract, whichever date is earlier.

4.02 *Starting the Work*

A. Contractor shall start to perform the Work on the date when the Contract Times commence to run. No Work may be done at the Site prior to such date.

4.03 *Reference Points*

A. Owner shall provide engineering surveys to establish reference points for construction which in Engineer's judgment are necessary to enable Contractor to proceed with the Work. Contractor shall be responsible for laying out the Work, shall protect and preserve the

Copyright© 2018 National Society of Professional Engineers, American Council of Engineering Companies, and American Society of Civil Engineers. All rights reserved.

established reference points and property monuments, and shall make no changes or relocations without the prior written approval of Owner. Contractor shall report to Engineer whenever any reference point or property monument is lost or destroyed or requires relocation because of necessary changes in grades or locations, and shall be responsible for the accurate replacement or relocation of such reference points or property monuments by professionally qualified personnel.

4.04 *Progress Schedule*

A. Contractor shall adhere to the Progress Schedule established in accordance with Paragraph 2.05 as it may be adjusted from time to time as provided below.

1. Contractor shall submit to Engineer for acceptance (to the extent indicated in Paragraph 2.05) proposed adjustments in the Progress Schedule that will not result in changing the Contract Times.

2. Proposed adjustments in the Progress Schedule that will change the Contract Times must be submitted in accordance with the requirements of Article 11.

B. Contractor shall carry on the Work and adhere to the Progress Schedule during all disputes or disagreements with Owner. No Work will be delayed or postponed pending resolution of any disputes or disagreements, or during any appeal process, except as permitted by Paragraph 16.04, or as Owner and Contractor may otherwise agree in writing.

4.05 *Delays in Contractor's Progress*

A. If Owner, Engineer, or anyone for whom Owner is responsible, delays, disrupts, or interferes with the performance or progress of the Work, then Contractor shall be entitled to an equitable adjustment in Contract Price or Contract Times.

B. Contractor shall not be entitled to an adjustment in Contract Price or Contract Times for delay, disruption, or interference caused by or within the control of Contractor. Delay, disruption, and interference attributable to and within the control of a Subcontractor or Supplier shall be deemed to be within the control of Contractor.

C. If Contractor's performance or progress is delayed, disrupted, or interfered with by unanticipated causes not the fault of and beyond the control of Owner, Contractor, and those for which they are responsible, then Contractor shall be entitled to an equitable adjustment in Contract Times. Such an adjustment will be Contractor's sole and exclusive remedy for the delays, disruption, and interference described in this paragraph. Causes of delay, disruption, or interference that may give rise to an adjustment in Contract Times under this paragraph include but are not limited to the following:

1. Severe and unavoidable natural catastrophes such as fires, floods, epidemics, and earthquakes;

2. Abnormal weather conditions;

3. Acts or failures to act of third-party utility owners or other third-party entities (other than those third-party utility owners or other third-party entities performing other work at or adjacent to the Site as arranged by or under contract with Owner, as contemplated in Article 8); and

4. Acts of war or terrorism.

Copyright© 2018 National Society of Professional Engineers, American Council of Engineering Companies, and American Society of Civil Engineers. All rights reserved.

D. Contractor's entitlement to an adjustment of Contract Times or Contract Price is limited as follows:

1. Contractor's entitlement to an adjustment of the Contract Times is conditioned on the delay, disruption, or interference adversely affecting an activity on the critical path to completion of the Work, as of the time of the delay, disruption, or interference.

2. Contractor shall not be entitled to an adjustment in Contract Price for any delay, disruption, or interference if such delay is concurrent with a delay, disruption, or interference caused by or within the control of Contractor. Such a concurrent delay by Contractor shall not preclude an adjustment of Contract Times to which Contractor is otherwise entitled.

3. Adjustments of Contract Times or Contract Price are subject to the provisions of Article 11.

E. Each Contractor request or Change Proposal seeking an increase in Contract Times or Contract Price must be supplemented by supporting data that sets forth in detail the following:

1. The circumstances that form the basis for the requested adjustment;

2. The date upon which each cause of delay, disruption, or interference began to affect the progress of the Work;

3. The date upon which each cause of delay, disruption, or interference ceased to affect the progress of the Work;

4. The number of days' increase in Contract Times claimed as a consequence of each such cause of delay, disruption, or interference; and

5. The impact on Contract Price, in accordance with the provisions of Paragraph 11.07.

Contractor shall also furnish such additional supporting documentation as Owner or Engineer may require including, where appropriate, a revised progress schedule indicating all the activities affected by the delay, disruption, or interference, and an explanation of the effect of the delay, disruption, or interference on the critical path to completion of the Work.

F. Delays, disruption, and interference to the performance or progress of the Work resulting from the existence of a differing subsurface or physical condition, an Underground Facility that was not shown or indicated by the Contract Documents, or not shown or indicated with reasonable accuracy, and those resulting from Hazardous Environmental Conditions, are governed by Article 5, together with the provisions of Paragraphs 4.05.D and 4.05.E.

G. Paragraph 8.03 addresses delays, disruption, and interference to the performance or progress of the Work resulting from the performance of certain other work at or adjacent to the Site.

ARTICLE 5—SITE; SUBSURFACE AND PHYSICAL CONDITIONS; HAZARDOUS ENVIRONMENTAL CONDITIONS

5.01 *Availability of Lands*

A. Owner shall furnish the Site. Owner shall notify Contractor in writing of any encumbrances or restrictions not of general application but specifically related to use of the Site with which Contractor must comply in performing the Work.

Copyright© 2018 National Society of Professional Engineers, American Council of Engineering Companies, and American Society of Civil Engineers. All rights reserved.

B. Upon reasonable written request, Owner shall furnish Contractor with a current statement of record legal title and legal description of the lands upon which permanent improvements are to be made and Owner's interest therein as necessary for giving notice of or filing a mechanic's or construction lien against such lands in accordance with applicable Laws and Regulations.

C. Contractor shall provide for all additional lands and access thereto that may be required for temporary construction facilities or storage of materials and equipment.

5.02 *Use of Site and Other Areas*

A. *Limitation on Use of Site and Other Areas*

1. Contractor shall confine construction equipment, temporary construction facilities, the storage of materials and equipment, and the operations of workers to the Site, adjacent areas that Contractor has arranged to use through construction easements or otherwise, and other adjacent areas permitted by Laws and Regulations, and shall not unreasonably encumber the Site and such other adjacent areas with construction equipment or other materials or equipment. Contractor shall assume full responsibility for (a) damage to the Site; (b) damage to any such other adjacent areas used for Contractor's operations; (c) damage to any other adjacent land or areas, or to improvements, structures, utilities, or similar facilities located at such adjacent lands or areas; and (d) for injuries and losses sustained by the owners or occupants of any such land or areas; provided that such damage or injuries result from the performance of the Work or from other actions or conduct of the Contractor or those for which Contractor is responsible.

2. If a damage or injury claim is made by the owner or occupant of any such land or area because of the performance of the Work, or because of other actions or conduct of the Contractor or those for which Contractor is responsible, Contractor shall (a) take immediate corrective or remedial action as required by Paragraph 7.13, or otherwise; (b) promptly attempt to settle the claim as to all parties through negotiations with such owner or occupant, or otherwise resolve the claim by arbitration or other dispute resolution proceeding, or in a court of competent jurisdiction; and (c) to the fullest extent permitted by Laws and Regulations, indemnify and hold harmless Owner and Engineer, and the officers, directors, members, partners, employees, agents, consultants and subcontractors of each and any of them, from and against any such claim, and against all costs, losses, and damages (including but not limited to all fees and charges of engineers, architects, attorneys, and other professionals and all court or arbitration or other dispute resolution costs) arising out of or relating to any claim or action, legal or equitable, brought by any such owner or occupant against Owner, Engineer, or any other party indemnified hereunder to the extent caused directly or indirectly, in whole or in part by, or based upon, Contractor's performance of the Work, or because of other actions or conduct of the Contractor or those for which Contractor is responsible.

B. *Removal of Debris During Performance of the Work*: During the progress of the Work the Contractor shall keep the Site and other adjacent areas free from accumulations of waste materials, rubbish, and other debris. Removal and disposal of such waste materials, rubbish, and other debris will conform to applicable Laws and Regulations.

C. *Cleaning*: Prior to Substantial Completion of the Work Contractor shall clean the Site and the Work and make it ready for utilization by Owner. At the completion of the Work Contractor shall remove from the Site and adjacent areas all tools, appliances, construction equipment

Copyright© 2018 National Society of Professional Engineers, American Council of Engineering Companies, and American Society of Civil Engineers. All rights reserved.

and machinery, and surplus materials and shall restore to original condition all property not designated for alteration by the Contract Documents.

D. *Loading of Structures*: Contractor shall not load nor permit any part of any structure to be loaded in any manner that will endanger the structure, nor shall Contractor subject any part of the Work or adjacent structures or land to stresses or pressures that will endanger them.

5.03 *Subsurface and Physical Conditions*

A. *Reports and Drawings*: The Supplementary Conditions identify:

1. Those reports of explorations and tests of subsurface conditions at or adjacent to the Site that contain Technical Data;

2. Those drawings of existing physical conditions at or adjacent to the Site, including those drawings depicting existing surface or subsurface structures at or adjacent to the Site (except Underground Facilities), that contain Technical Data; and

3. Technical Data contained in such reports and drawings.

B. *Underground Facilities*: Underground Facilities are shown or indicated on the Drawings, pursuant to Paragraph 5.05, and not in the drawings referred to in Paragraph 5.03.A. Information and data regarding the presence or location of Underground Facilities are not intended to be categorized, identified, or defined as Technical Data.

C. *Reliance by Contractor on Technical Data*: Contractor may rely upon the accuracy of the Technical Data expressly identified in the Supplementary Conditions with respect to such reports and drawings, but such reports and drawings are not Contract Documents. If no such express identification has been made, then Contractor may rely upon the accuracy of the Technical Data as defined in Paragraph 1.01.A.46.b.

D. *Limitations of Other Data and Documents*: Except for such reliance on Technical Data, Contractor may not rely upon or make any claim against Owner or Engineer, or any of their officers, directors, members, partners, employees, agents, consultants, or subcontractors, with respect to:

1. the completeness of such reports and drawings for Contractor's purposes, including, but not limited to, any aspects of the means, methods, techniques, sequences, and procedures of construction to be employed by Contractor, and safety precautions and programs incident thereto;

2. other data, interpretations, opinions, and information contained in such reports or shown or indicated in such drawings;

3. the contents of other Site-related documents made available to Contractor, such as record drawings from other projects at or adjacent to the Site, or Owner's archival documents concerning the Site; or

4. any Contractor interpretation of or conclusion drawn from any Technical Data or any such other data, interpretations, opinions, or information.

Copyright© 2018 National Society of Professional Engineers, American Council of Engineering Companies, and American Society of Civil Engineers. All rights reserved.

5.04 *Differing Subsurface or Physical Conditions*

A. *Notice by Contractor*: If Contractor believes that any subsurface or physical condition that is uncovered or revealed at the Site:

1. is of such a nature as to establish that any Technical Data on which Contractor is entitled to rely as provided in Paragraph 5.03 is materially inaccurate;

2. is of such a nature as to require a change in the Drawings or Specifications;

3. differs materially from that shown or indicated in the Contract Documents; or

4. is of an unusual nature, and differs materially from conditions ordinarily encountered and generally recognized as inherent in work of the character provided for in the Contract Documents;

then Contractor shall, promptly after becoming aware thereof and before further disturbing the subsurface or physical conditions or performing any Work in connection therewith (except in an emergency as required by Paragraph 7.15), notify Owner and Engineer in writing about such condition. Contractor shall not further disturb such condition or perform any Work in connection therewith (except with respect to an emergency) until receipt of a written statement permitting Contractor to do so.

B. *Engineer's Review*: After receipt of written notice as required by the preceding paragraph, Engineer will promptly review the subsurface or physical condition in question; determine whether it is necessary for Owner to obtain additional exploration or tests with respect to the condition; conclude whether the condition falls within any one or more of the differing site condition categories in Paragraph 5.04.A; obtain any pertinent cost or schedule information from Contractor; prepare recommendations to Owner regarding the Contractor's resumption of Work in connection with the subsurface or physical condition in question and the need for any change in the Drawings or Specifications; and advise Owner in writing of Engineer's findings, conclusions, and recommendations.

C. *Owner's Statement to Contractor Regarding Site Condition*: After receipt of Engineer's written findings, conclusions, and recommendations, Owner shall issue a written statement to Contractor (with a copy to Engineer) regarding the subsurface or physical condition in question, addressing the resumption of Work in connection with such condition, indicating whether any change in the Drawings or Specifications will be made, and adopting or rejecting Engineer's written findings, conclusions, and recommendations, in whole or in part.

D. *Early Resumption of Work*: If at any time Engineer determines that Work in connection with the subsurface or physical condition in question may resume prior to completion of Engineer's review or Owner's issuance of its statement to Contractor, because the condition in question has been adequately documented, and analyzed on a preliminary basis, then the Engineer may at its discretion instruct Contractor to resume such Work.

E. *Possible Price and Times Adjustments*

1. Contractor shall be entitled to an equitable adjustment in Contract Price or Contract Times, to the extent that the existence of a differing subsurface or physical condition, or any related delay, disruption, or interference, causes an increase or decrease in

Copyright© 2018 National Society of Professional Engineers, American Council of Engineering Companies, and American Society of Civil Engineers. All rights reserved.

Contractor's cost of, or time required for, performance of the Work; subject, however, to the following:

a. Such condition must fall within any one or more of the categories described in Paragraph 5.04.A;

b. With respect to Work that is paid for on a unit price basis, any adjustment in Contract Price will be subject to the provisions of Paragraph 13.03; and,

c. Contractor's entitlement to an adjustment of the Contract Times is subject to the provisions of Paragraphs 4.05.D and 4.05.E.

2. Contractor shall not be entitled to any adjustment in the Contract Price or Contract Times with respect to a subsurface or physical condition if:

a. Contractor knew of the existence of such condition at the time Contractor made a commitment to Owner with respect to Contract Price and Contract Times by the submission of a Bid or becoming bound under a negotiated contract, or otherwise;

b. The existence of such condition reasonably could have been discovered or revealed as a result of any examination, investigation, exploration, test, or study of the Site and contiguous areas expressly required by the Bidding Requirements or Contract Documents to be conducted by or for Contractor prior to Contractor's making such commitment; or

c. Contractor failed to give the written notice required by Paragraph 5.04.A.

3. If Owner and Contractor agree regarding Contractor's entitlement to and the amount or extent of any adjustment in the Contract Price or Contract Times, then any such adjustment will be set forth in a Change Order.

4. Contractor may submit a Change Proposal regarding its entitlement to or the amount or extent of any adjustment in the Contract Price or Contract Times, no later than 30 days after Owner's issuance of the Owner's written statement to Contractor regarding the subsurface or physical condition in question.

F. *Underground Facilities; Hazardous Environmental Conditions*: Paragraph 5.05 governs rights and responsibilities regarding the presence or location of Underground Facilities. Paragraph 5.06 governs rights and responsibilities regarding Hazardous Environmental Conditions. The provisions of Paragraphs 5.03 and 5.04 are not applicable to the presence or location of Underground Facilities, or to Hazardous Environmental Conditions.

5.05 *Underground Facilities*

A. *Contractor's Responsibilities*: Unless it is otherwise expressly provided in the Supplementary Conditions, the cost of all of the following are included in the Contract Price, and Contractor shall have full responsibility for:

1. reviewing and checking all information and data regarding existing Underground Facilities at the Site;

2. complying with applicable state and local utility damage prevention Laws and Regulations;

Copyright© 2018 National Society of Professional Engineers, American Council of Engineering Companies, and American Society of Civil Engineers. All rights reserved.

3. verifying the actual location of those Underground Facilities shown or indicated in the Contract Documents as being within the area affected by the Work, by exposing such Underground Facilities during the course of construction;

4. coordination of the Work with the owners (including Owner) of such Underground Facilities, during construction; and

5. the safety and protection of all existing Underground Facilities at the Site, and repairing any damage thereto resulting from the Work.

B. *Notice by Contractor*: If Contractor believes that an Underground Facility that is uncovered or revealed at the Site was not shown or indicated on the Drawings, or was not shown or indicated on the Drawings with reasonable accuracy, then Contractor shall, promptly after becoming aware thereof and before further disturbing conditions affected thereby or performing any Work in connection therewith (except in an emergency as required by Paragraph 7.15), notify Owner and Engineer in writing regarding such Underground Facility.

C. *Engineer's Review*: Engineer will:

1. promptly review the Underground Facility and conclude whether such Underground Facility was not shown or indicated on the Drawings, or was not shown or indicated with reasonable accuracy;

2. identify and communicate with the owner of the Underground Facility; prepare recommendations to Owner (and if necessary issue any preliminary instructions to Contractor) regarding the Contractor's resumption of Work in connection with the Underground Facility in question;

3. obtain any pertinent cost or schedule information from Contractor; determine the extent, if any, to which a change is required in the Drawings or Specifications to reflect and document the consequences of the existence or location of the Underground Facility; and

4. advise Owner in writing of Engineer's findings, conclusions, and recommendations.

During such time, Contractor shall be responsible for the safety and protection of such Underground Facility.

D. *Owner's Statement to Contractor Regarding Underground Facility*: After receipt of Engineer's written findings, conclusions, and recommendations, Owner shall issue a written statement to Contractor (with a copy to Engineer) regarding the Underground Facility in question addressing the resumption of Work in connection with such Underground Facility, indicating whether any change in the Drawings or Specifications will be made, and adopting or rejecting Engineer's written findings, conclusions, and recommendations in whole or in part.

E. *Early Resumption of Work*: If at any time Engineer determines that Work in connection with the Underground Facility may resume prior to completion of Engineer's review or Owner's issuance of its statement to Contractor, because the Underground Facility in question and conditions affected by its presence have been adequately documented, and analyzed on a preliminary basis, then the Engineer may at its discretion instruct Contractor to resume such Work.

F. *Possible Price and Times Adjustments*

1. Contractor shall be entitled to an equitable adjustment in the Contract Price or Contract Times, to the extent that any existing Underground Facility at the Site that was not shown

Copyright© 2018 National Society of Professional Engineers, American Council of Engineering Companies, and American Society of Civil Engineers. All rights reserved.

or indicated on the Drawings, or was not shown or indicated with reasonable accuracy, or any related delay, disruption, or interference, causes an increase or decrease in Contractor's cost of, or time required for, performance of the Work; subject, however, to the following:

a. With respect to Work that is paid for on a unit price basis, any adjustment in Contract Price will be subject to the provisions of Paragraph 13.03;

b. Contractor's entitlement to an adjustment of the Contract Times is subject to the provisions of Paragraphs 4.05.D and 4.05.E; and

c. Contractor gave the notice required in Paragraph 5.05.B.

2. If Owner and Contractor agree regarding Contractor's entitlement to and the amount or extent of any adjustment in the Contract Price or Contract Times, then any such adjustment will be set forth in a Change Order.

3. Contractor may submit a Change Proposal regarding its entitlement to or the amount or extent of any adjustment in the Contract Price or Contract Times, no later than 30 days after Owner's issuance of the Owner's written statement to Contractor regarding the Underground Facility in question.

4. The information and data shown or indicated on the Drawings with respect to existing Underground Facilities at the Site is based on information and data (a) furnished by the owners of such Underground Facilities, or by others, (b) obtained from available records, or (c) gathered in an investigation conducted in accordance with the current edition of ASCE 38, Standard Guideline for the Collection and Depiction of Existing Subsurface Utility Data, by the American Society of Civil Engineers. If such information or data is incorrect or incomplete, Contractor's remedies are limited to those set forth in this Paragraph 5.05.F.

5.06 *Hazardous Environmental Conditions at Site*

A. *Reports and Drawings*: The Supplementary Conditions identify:

1. those reports known to Owner relating to Hazardous Environmental Conditions that have been identified at or adjacent to the Site;

2. drawings known to Owner relating to Hazardous Environmental Conditions that have been identified at or adjacent to the Site; and

3. Technical Data contained in such reports and drawings.

B. *Reliance by Contractor on Technical Data Authorized*: Contractor may rely upon the accuracy of the Technical Data expressly identified in the Supplementary Conditions with respect to such reports and drawings, but such reports and drawings are not Contract Documents. If no such express identification has been made, then Contractor may rely on the accuracy of the Technical Data as defined in Paragraph 1.01.A.46.b. Except for such reliance on Technical Data, Contractor may not rely upon or make any claim against Owner or Engineer, or any of their officers, directors, members, partners, employees, agents, consultants, or subcontractors, with respect to:

1. the completeness of such reports and drawings for Contractor's purposes, including, but not limited to, any aspects of the means, methods, techniques, sequences and procedures

Copyright© 2018 National Society of Professional Engineers, American Council of Engineering Companies, and American Society of Civil Engineers. All rights reserved.

of construction to be employed by Contractor, and safety precautions and programs incident thereto;

2. other data, interpretations, opinions, and information contained in such reports or shown or indicated in such drawings; or

3. any Contractor interpretation of or conclusion drawn from any Technical Data or any such other data, interpretations, opinions or information.

C. Contractor shall not be responsible for removing or remediating any Hazardous Environmental Condition encountered, uncovered, or revealed at the Site unless such removal or remediation is expressly identified in the Contract Documents to be within the scope of the Work.

D. Contractor shall be responsible for controlling, containing, and duly removing all Constituents of Concern brought to the Site by Contractor, Subcontractors, Suppliers, or anyone else for whom Contractor is responsible, and for any associated costs; and for the costs of removing and remediating any Hazardous Environmental Condition created by the presence of any such Constituents of Concern.

E. If Contractor encounters, uncovers, or reveals a Hazardous Environmental Condition whose removal or remediation is not expressly identified in the Contract Documents as being within the scope of the Work, or if Contractor or anyone for whom Contractor is responsible creates a Hazardous Environmental Condition, then Contractor shall immediately: (1) secure or otherwise isolate such condition; (2) stop all Work in connection with such condition and in any area affected thereby (except in an emergency as required by Paragraph 7.15); and (3) notify Owner and Engineer (and promptly thereafter confirm such notice in writing). Owner shall promptly consult with Engineer concerning the necessity for Owner to retain a qualified expert to evaluate such condition or take corrective action, if any. Promptly after consulting with Engineer, Owner shall take such actions as are necessary to permit Owner to timely obtain required permits and provide Contractor the written notice required by Paragraph 5.06.F. If Contractor or anyone for whom Contractor is responsible created the Hazardous Environmental Condition in question, then Owner may remove and remediate the Hazardous Environmental Condition, and impose a set-off against payments to account for the associated costs.

F. Contractor shall not resume Work in connection with such Hazardous Environmental Condition or in any affected area until after Owner has obtained any required permits related thereto, and delivered written notice to Contractor either (1) specifying that such condition and any affected area is or has been rendered safe for the resumption of Work, or (2) specifying any special conditions under which such Work may be resumed safely.

G. If Owner and Contractor cannot agree as to entitlement to or on the amount or extent, if any, of any adjustment in Contract Price or Contract Times, as a result of such Work stoppage, such special conditions under which Work is agreed to be resumed by Contractor, or any costs or expenses incurred in response to the Hazardous Environmental Condition, then within 30 days of Owner's written notice regarding the resumption of Work, Contractor may submit a Change Proposal, or Owner may impose a set-off. Entitlement to any such adjustment is subject to the provisions of Paragraphs 4.05.D, 4.05.E, 11.07, and 11.08.

H. If, after receipt of such written notice, Contractor does not agree to resume such Work based on a reasonable belief it is unsafe, or does not agree to resume such Work under such special

EJCDC® C-700, Standard General Conditions of the Construction Contract.
Copyright© 2018 National Society of Professional Engineers, American Council of Engineering Companies, and American Society of Civil Engineers. All rights reserved.

conditions, then Owner may order the portion of the Work that is in the area affected by such condition to be deleted from the Work, following the contractual change procedures in Article 11. Owner may have such deleted portion of the Work performed by Owner's own forces or others in accordance with Article 8.

I. To the fullest extent permitted by Laws and Regulations, Owner shall indemnify and hold harmless Contractor, Subcontractors, and Engineer, and the officers, directors, members, partners, employees, agents, consultants, and subcontractors of each and any of them, from and against all claims, costs, losses, and damages (including but not limited to all fees and charges of engineers, architects, attorneys, and other professionals, and all court, arbitration, or other dispute resolution costs) arising out of or relating to a Hazardous Environmental Condition, provided that such Hazardous Environmental Condition (1) was not shown or indicated in the Drawings, Specifications, or other Contract Documents, identified as Technical Data entitled to limited reliance pursuant to Paragraph 5.06.B, or identified in the Contract Documents to be included within the scope of the Work, and (2) was not created by Contractor or by anyone for whom Contractor is responsible. Nothing in this Paragraph 5.06.I obligates Owner to indemnify any individual or entity from and against the consequences of that individual's or entity's own negligence.

J. To the fullest extent permitted by Laws and Regulations, Contractor shall indemnify and hold harmless Owner and Engineer, and the officers, directors, members, partners, employees, agents, consultants, and subcontractors of each and any of them, from and against all claims, costs, losses, and damages (including but not limited to all fees and charges of engineers, architects, attorneys, and other professionals and all court or arbitration or other dispute resolution costs) arising out of or relating to the failure to control, contain, or remove a Constituent of Concern brought to the Site by Contractor or by anyone for whom Contractor is responsible, or to a Hazardous Environmental Condition created by Contractor or by anyone for whom Contractor is responsible. Nothing in this Paragraph 5.06.J obligates Contractor to indemnify any individual or entity from and against the consequences of that individual's or entity's own negligence.

K. The provisions of Paragraphs 5.03, 5.04, and 5.05 do not apply to the presence of Constituents of Concern or to a Hazardous Environmental Condition uncovered or revealed at the Site.

ARTICLE 6—BONDS AND INSURANCE

6.01 *Performance, Payment, and Other Bonds*

A. Contractor shall furnish a performance bond and a payment bond, each in an amount at least equal to the Contract Price, as security for the faithful performance and payment of Contractor's obligations under the Contract. These bonds must remain in effect until one year after the date when final payment becomes due or until completion of the correction period specified in Paragraph 15.08, whichever is later, except as provided otherwise by Laws or Regulations, the terms of a prescribed bond form, the Supplementary Conditions, or other provisions of the Contract.

B. Contractor shall also furnish such other bonds (if any) as are required by the Supplementary Conditions or other provisions of the Contract.

C. All bonds must be in the form included in the Bidding Documents or otherwise specified by Owner prior to execution of the Contract, except as provided otherwise by Laws or

Copyright© 2018 National Society of Professional Engineers, American Council of Engineering Companies, and American Society of Civil Engineers. All rights reserved.

Regulations, and must be issued and signed by a surety named in "Companies Holding Certificates of Authority as Acceptable Sureties on Federal Bonds and as Acceptable Reinsuring Companies" as published in Department Circular 570 (as amended and supplemented) by the Bureau of the Fiscal Service, U.S. Department of the Treasury. A bond signed by an agent or attorney-in-fact must be accompanied by a certified copy of that individual's authority to bind the surety. The evidence of authority must show that it is effective on the date the agent or attorney-in-fact signed the accompanying bond.

D. Contractor shall obtain the required bonds from surety companies that are duly licensed or authorized, in the state or jurisdiction in which the Project is located, to issue bonds in the required amounts.

E. If the surety on a bond furnished by Contractor is declared bankrupt or becomes insolvent, or the surety ceases to meet the requirements above, then Contractor shall promptly notify Owner and Engineer in writing and shall, within 20 days after the event giving rise to such notification, provide another bond and surety, both of which must comply with the bond and surety requirements above.

F. If Contractor has failed to obtain a required bond, Owner may exclude the Contractor from the Site and exercise Owner's termination rights under Article 16.

G. Upon request to Owner from any Subcontractor, Supplier, or other person or entity claiming to have furnished labor, services, materials, or equipment used in the performance of the Work, Owner shall provide a copy of the payment bond to such person or entity.

H. Upon request to Contractor from any Subcontractor, Supplier, or other person or entity claiming to have furnished labor, services, materials, or equipment used in the performance of the Work, Contractor shall provide a copy of the payment bond to such person or entity.

6.02 *Insurance—General Provisions*

A. Owner and Contractor shall obtain and maintain insurance as required in this article and in the Supplementary Conditions.

B. All insurance required by the Contract to be purchased and maintained by Owner or Contractor shall be obtained from insurance companies that are duly licensed or authorized in the state or jurisdiction in which the Project is located to issue insurance policies for the required limits and coverages. Unless a different standard is indicated in the Supplementary Conditions, all companies that provide insurance policies required under this Contract shall have an A.M. Best rating of A-VII or better.

C. Alternative forms of insurance coverage, including but not limited to self-insurance and "Occupational Accident and Excess Employer's Indemnity Policies," are not sufficient to meet the insurance requirements of this Contract, unless expressly allowed in the Supplementary Conditions.

D. Contractor shall deliver to Owner, with copies to each additional insured identified in the Contract, certificates of insurance and endorsements establishing that Contractor has obtained and is maintaining the policies and coverages required by the Contract. Upon request by Owner or any other insured, Contractor shall also furnish other evidence of such required insurance, including but not limited to copies of policies, documentation of applicable self-insured retentions (if allowed) and deductibles, full disclosure of all relevant exclusions, and evidence of insurance required to be purchased and maintained by

Copyright© 2018 National Society of Professional Engineers, American Council of Engineering Companies, and American Society of Civil Engineers. All rights reserved.

Subcontractors or Suppliers. In any documentation furnished under this provision, Contractor, Subcontractors, and Suppliers may block out (redact) (1) any confidential premium or pricing information and (2) any wording specific to a project or jurisdiction other than those applicable to this Contract.

E. Owner shall deliver to Contractor, with copies to each additional insured identified in the Contract, certificates of insurance and endorsements establishing that Owner has obtained and is maintaining the policies and coverages required of Owner by the Contract (if any). Upon request by Contractor or any other insured, Owner shall also provide other evidence of such required insurance (if any), including but not limited to copies of policies, documentation of applicable self-insured retentions (if allowed) and deductibles, and full disclosure of all relevant exclusions. In any documentation furnished under this provision, Owner may block out (redact) (1) any confidential premium or pricing information and (2) any wording specific to a project or jurisdiction other than those relevant to this Contract.

F. Failure of Owner or Contractor to demand such certificates or other evidence of the other party's full compliance with these insurance requirements, or failure of Owner or Contractor to identify a deficiency in compliance from the evidence provided, will not be construed as a waiver of the other party's obligation to obtain and maintain such insurance.

G. In addition to the liability insurance required to be provided by Contractor, the Owner, at Owner's option, may purchase and maintain Owner's own liability insurance. Owner's liability policies, if any, operate separately and independently from policies required to be provided by Contractor, and Contractor cannot rely upon Owner's liability policies for any of Contractor's obligations to the Owner, Engineer, or third parties.

H. Contractor shall require:

1. Subcontractors to purchase and maintain worker's compensation, commercial general liability, and other insurance that is appropriate for their participation in the Project, and to name as additional insureds Owner and Engineer (and any other individuals or entities identified in the Supplementary Conditions as additional insureds on Contractor's liability policies) on each Subcontractor's commercial general liability insurance policy; and

2. Suppliers to purchase and maintain insurance that is appropriate for their participation in the Project.

I. If either party does not purchase or maintain the insurance required of such party by the Contract, such party shall notify the other party in writing of such failure to purchase prior to the start of the Work, or of such failure to maintain prior to any change in the required coverage.

J. If Contractor has failed to obtain and maintain required insurance, Contractor's entitlement to enter or remain at the Site will end immediately, and Owner may impose an appropriate set-off against payment for any associated costs (including but not limited to the cost of purchasing necessary insurance coverage), and exercise Owner's termination rights under Article 16.

K. Without prejudice to any other right or remedy, if a party has failed to obtain required insurance, the other party may elect (but is in no way obligated) to obtain equivalent insurance to protect such other party's interests at the expense of the party who was required to provide such coverage, and the Contract Price will be adjusted accordingly.

Copyright© 2018 National Society of Professional Engineers, American Council of Engineering Companies, and American Society of Civil Engineers. All rights reserved.

L. Owner does not represent that insurance coverage and limits established in this Contract necessarily will be adequate to protect Contractor or Contractor's interests. Contractor is responsible for determining whether such coverage and limits are adequate to protect its interests, and for obtaining and maintaining any additional insurance that Contractor deems necessary.

M. The insurance and insurance limits required herein will not be deemed as a limitation on Contractor's liability, or that of its Subcontractors or Suppliers, under the indemnities granted to Owner and other individuals and entities in the Contract or otherwise.

N. All the policies of insurance required to be purchased and maintained under this Contract will contain a provision or endorsement that the coverage afforded will not be canceled, or renewal refused, until at least 10 days prior written notice has been given to the purchasing policyholder. Within three days of receipt of any such written notice, the purchasing policyholder shall provide a copy of the notice to each other insured and Engineer.

6.03 *Contractor's Insurance*

A. *Required Insurance*: Contractor shall purchase and maintain Worker's Compensation, Commercial General Liability, and other insurance pursuant to the specific requirements of the Supplementary Conditions.

B. *General Provisions*: The policies of insurance required by this Paragraph 6.03 as supplemented must:

1. include at least the specific coverages required;

2. be written for not less than the limits provided, or those required by Laws or Regulations, whichever is greater;

3. remain in effect at least until the Work is complete (as set forth in Paragraph 15.06.D), and longer if expressly required elsewhere in this Contract, and at all times thereafter when Contractor may be correcting, removing, or replacing defective Work as a warranty or correction obligation, or otherwise, or returning to the Site to conduct other tasks arising from the Contract;

4. apply with respect to the performance of the Work, whether such performance is by Contractor, any Subcontractor or Supplier, or by anyone directly or indirectly employed by any of them to perform any of the Work, or by anyone for whose acts any of them may be liable; and

5. include all necessary endorsements to support the stated requirements.

C. *Additional Insureds*: The Contractor's commercial general liability, automobile liability, employer's liability, umbrella or excess, pollution liability, and unmanned aerial vehicle liability policies, if required by this Contract, must:

1. include and list as additional insureds Owner and Engineer, and any individuals or entities identified as additional insureds in the Supplementary Conditions;

2. include coverage for the respective officers, directors, members, partners, employees, and consultants of all such additional insureds;

3. afford primary coverage to these additional insureds for all claims covered thereby (including as applicable those arising from both ongoing and completed operations);

Copyright© 2018 National Society of Professional Engineers, American Council of Engineering Companies, and American Society of Civil Engineers. All rights reserved.

4. not seek contribution from insurance maintained by the additional insured; and

5. as to commercial general liability insurance, apply to additional insureds with respect to liability caused in whole or in part by Contractor's acts or omissions, or the acts and omissions of those working on Contractor's behalf, in the performance of Contractor's operations.

6.04 *Builder's Risk and Other Property Insurance*

A. *Builder's Risk*: Unless otherwise provided in the Supplementary Conditions, Contractor shall purchase and maintain builder's risk insurance upon the Work on a completed value basis, in the amount of the Work's full insurable replacement cost (subject to such deductible amounts as may be provided in the Supplementary Conditions or required by Laws and Regulations). The specific requirements applicable to the builder's risk insurance are set forth in the Supplementary Conditions.

B. *Property Insurance for Facilities of Owner Where Work Will Occur*: Owner is responsible for obtaining and maintaining property insurance covering each existing structure, building, or facility in which any part of the Work will occur, or to which any part of the Work will attach or be adjoined. Such property insurance will be written on a special perils (all-risk) form, on a replacement cost basis, providing coverage consistent with that required for the builder's risk insurance, and will be maintained until the Work is complete, as set forth in Paragraph 15.06.D.

C. *Property Insurance for Substantially Complete Facilities*: Promptly after Substantial Completion, and before actual occupancy or use of the substantially completed Work, Owner will obtain property insurance for such substantially completed Work, and maintain such property insurance at least until the Work is complete, as set forth in Paragraph 15.06.D. Such property insurance will be written on a special perils (all-risk) form, on a replacement cost basis, and provide coverage consistent with that required for the builder's risk insurance. The builder's risk insurance may terminate upon written confirmation of Owner's procurement of such property insurance.

D. *Partial Occupancy or Use by Owner*: If Owner will occupy or use a portion or portions of the Work prior to Substantial Completion of all the Work, as provided in Paragraph 15.04, then Owner (directly, if it is the purchaser of the builder's risk policy, or through Contractor) will provide advance notice of such occupancy or use to the builder's risk insurer, and obtain an endorsement consenting to the continuation of coverage prior to commencing such partial occupancy or use.

E. *Insurance of Other Property; Additional Insurance*: If the express insurance provisions of the Contract do not require or address the insurance of a property item or interest, then the entity or individual owning such property item will be responsible for insuring it. If Contractor elects to obtain other special insurance to be included in or supplement the builder's risk or property insurance policies provided under this Paragraph 6.04, it may do so at Contractor's expense.

6.05 *Property Losses; Subrogation*

A. The builder's risk insurance policy purchased and maintained in accordance with Paragraph 6.04 (or an installation floater policy if authorized by the Supplementary Conditions), will contain provisions to the effect that in the event of payment of any loss or damage the insurer will have no rights of recovery against any insureds thereunder, or against

Copyright© 2018 National Society of Professional Engineers, American Council of Engineering Companies, and American Society of Civil Engineers. All rights reserved.

Engineer or its consultants, or their officers, directors, members, partners, employees, agents, consultants, or subcontractors.

1. Owner and Contractor waive all rights against each other and the respective officers, directors, members, partners, employees, agents, consultants, and subcontractors of each and any of them, for all losses and damages caused by, arising out of, or resulting from any of the perils, risks, or causes of loss covered by such policies and any other property insurance applicable to the Work; and, in addition, waive all such rights against Engineer, its consultants, all individuals or entities identified in the Supplementary Conditions as builder's risk or installation floater insureds, and the officers, directors, members, partners, employees, agents, consultants, and subcontractors of each and any of them, under such policies for losses and damages so caused.
2. None of the above waivers extends to the rights that any party making such waiver may have to the proceeds of insurance held by Owner or Contractor as trustee or fiduciary, or otherwise payable under any policy so issued.

B. Any property insurance policy maintained by Owner covering any loss, damage, or consequential loss to Owner's existing structures, buildings, or facilities in which any part of the Work will occur, or to which any part of the Work will attach or adjoin; to adjacent structures, buildings, or facilities of Owner; or to part or all of the completed or substantially completed Work, during partial occupancy or use pursuant to Paragraph 15.04, after Substantial Completion pursuant to Paragraph 15.03, or after final payment pursuant to Paragraph 15.06, will contain provisions to the effect that in the event of payment of any loss or damage the insurer will have no rights of recovery against any insureds thereunder, or against Contractor, Subcontractors, or Engineer, or the officers, directors, members, partners, employees, agents, consultants, or subcontractors of each and any of them, and that the insured is allowed to waive the insurer's rights of subrogation in a written contract executed prior to the loss, damage, or consequential loss.

1. Owner waives all rights against Contractor, Subcontractors, and Engineer, and the officers, directors, members, partners, employees, agents, consultants and subcontractors of each and any of them, for all losses and damages caused by, arising out of, or resulting from fire or any of the perils, risks, or causes of loss covered by such policies.

C. The waivers in this Paragraph 6.05 include the waiver of rights due to business interruption, loss of use, or other consequential loss extending beyond direct physical loss or damage to Owner's property or the Work caused by, arising out of, or resulting from fire or other insured peril, risk, or cause of loss.

D. Contractor shall be responsible for assuring that each Subcontract contains provisions whereby the Subcontractor waives all rights against Owner, Contractor, all individuals or entities identified in the Supplementary Conditions as insureds, the Engineer and its consultants, and the officers, directors, members, partners, employees, agents, consultants, and subcontractors of each and any of them, for all losses and damages caused by, arising out of, relating to, or resulting from fire or other peril, risk, or cause of loss covered by builder's risk insurance, installation floater, and any other property insurance applicable to the Work.

Copyright© 2018 National Society of Professional Engineers, American Council of Engineering Companies, and American Society of Civil Engineers. All rights reserved.

6.06 *Receipt and Application of Property Insurance Proceeds*

A. Any insured loss under the builder's risk and other policies of property insurance required by Paragraph 6.04 will be adjusted and settled with the named insured that purchased the policy. Such named insured shall act as fiduciary for the other insureds, and give notice to such other insureds that adjustment and settlement of a claim is in progress. Any other insured may state its position regarding a claim for insured loss in writing within 15 days after notice of such claim.

B. Proceeds for such insured losses may be made payable by the insurer either jointly to multiple insureds, or to the named insured that purchased the policy in its own right and as fiduciary for other insureds, subject to the requirements of any applicable mortgage clause. A named insured receiving insurance proceeds under the builder's risk and other policies of insurance required by Paragraph 6.04 shall maintain such proceeds in a segregated account, and distribute such proceeds in accordance with such agreement as the parties in interest may reach, or as otherwise required under the dispute resolution provisions of this Contract or applicable Laws and Regulations.

C. If no other special agreement is reached, Contractor shall repair or replace the damaged Work, using allocated insurance proceeds.

ARTICLE 7—CONTRACTOR'S RESPONSIBILITIES

7.01 *Contractor's Means and Methods of Construction*

A. Contractor shall be solely responsible for the means, methods, techniques, sequences, and procedures of construction.

B. If the Contract Documents note, or Contractor determines, that professional engineering or other design services are needed to carry out Contractor's responsibilities for construction means, methods, techniques, sequences, and procedures, or for Site safety, then Contractor shall cause such services to be provided by a properly licensed design professional, at Contractor's expense. Such services are not Owner-delegated professional design services under this Contract, and neither Owner nor Engineer has any responsibility with respect to (1) Contractor's determination of the need for such services, (2) the qualifications or licensing of the design professionals retained or employed by Contractor, (3) the performance of such services, or (4) any errors, omissions, or defects in such services.

7.02 *Supervision and Superintendence*

A. Contractor shall supervise, inspect, and direct the Work competently and efficiently, devoting such attention thereto and applying such skills and expertise as may be necessary to perform the Work in accordance with the Contract Documents.

B. At all times during the progress of the Work, Contractor shall assign a competent resident superintendent who will not be replaced without written notice to Owner and Engineer except under extraordinary circumstances.

7.03 *Labor; Working Hours*

A. Contractor shall provide competent, suitably qualified personnel to survey and lay out the Work and perform construction as required by the Contract Documents. Contractor shall maintain good discipline and order at the Site.

Copyright© 2018 National Society of Professional Engineers, American Council of Engineering Companies, and American Society of Civil Engineers. All rights reserved.

B. Contractor shall be fully responsible to Owner and Engineer for all acts and omissions of Contractor's employees; of Suppliers and Subcontractors, and their employees; and of any other individuals or entities performing or furnishing any of the Work, just as Contractor is responsible for Contractor's own acts and omissions.

C. Except as otherwise required for the safety or protection of persons or the Work or property at the Site or adjacent thereto, and except as otherwise stated in the Contract Documents, all Work at the Site will be performed during regular working hours, Monday through Friday. Contractor will not perform Work on a Saturday, Sunday, or any legal holiday. Contractor may perform Work outside regular working hours or on Saturdays, Sundays, or legal holidays only with Owner's written consent, which will not be unreasonably withheld.

7.04 *Services, Materials, and Equipment*

A. Unless otherwise specified in the Contract Documents, Contractor shall provide and assume full responsibility for all services, materials, equipment, labor, transportation, construction equipment and machinery, tools, appliances, fuel, power, light, heat, telephone, water, sanitary facilities, temporary facilities, and all other facilities and incidentals necessary for the performance, testing, start up, and completion of the Work, whether or not such items are specifically called for in the Contract Documents.

B. All materials and equipment incorporated into the Work must be new and of good quality, except as otherwise provided in the Contract Documents. All special warranties and guarantees required by the Specifications will expressly run to the benefit of Owner. If required by Engineer, Contractor shall furnish satisfactory evidence (including reports of required tests) as to the source, kind, and quality of materials and equipment.

C. All materials and equipment must be stored, applied, installed, connected, erected, protected, used, cleaned, and conditioned in accordance with instructions of the applicable Supplier, except as otherwise may be provided in the Contract Documents.

7.05 *"Or Equals"*

A. *Contractor's Request; Governing Criteria*: Whenever an item of equipment or material is specified or described in the Contract Documents by using the names of one or more proprietary items or specific Suppliers, the Contract Price has been based upon Contractor furnishing such item as specified. The specification or description of such an item is intended to establish the type, function, appearance, and quality required. Unless the specification or description contains or is followed by words reading that no like, equivalent, or "or equal" item is permitted, Contractor may request that Engineer authorize the use of other items of equipment or material, or items from other proposed Suppliers, under the circumstances described below.

1. If Engineer in its sole discretion determines that an item of equipment or material proposed by Contractor is functionally equal to that named and sufficiently similar so that no change in related Work will be required, Engineer will deem it an "or equal" item. For the purposes of this paragraph, a proposed item of equipment or material will be considered functionally equal to an item so named if:

a. in the exercise of reasonable judgment Engineer determines that the proposed item:

1) is at least equal in materials of construction, quality, durability, appearance, strength, and design characteristics;

Copyright© 2018 National Society of Professional Engineers, American Council of Engineering Companies, and American Society of Civil Engineers. All rights reserved.

2) will reliably perform at least equally well the function and achieve the results imposed by the design concept of the completed Project as a functioning whole;

3) has a proven record of performance and availability of responsive service; and

4) is not objectionable to Owner.

b. Contractor certifies that, if the proposed item is approved and incorporated into the Work:

1) there will be no increase in cost to the Owner or increase in Contract Times; and

2) the item will conform substantially to the detailed requirements of the item named in the Contract Documents.

B. *Contractor's Expense*: Contractor shall provide all data in support of any proposed "or equal" item at Contractor's expense.

C. *Engineer's Evaluation and Determination*: Engineer will be allowed a reasonable time to evaluate each "or-equal" request. Engineer may require Contractor to furnish additional data about the proposed "or-equal" item. Engineer will be the sole judge of acceptability. No "or-equal" item will be ordered, furnished, installed, or utilized until Engineer's review is complete and Engineer determines that the proposed item is an "or-equal," which will be evidenced by an approved Shop Drawing or other written communication. Engineer will advise Contractor in writing of any negative determination.

D. *Effect of Engineer's Determination*: Neither approval nor denial of an "or-equal" request will result in any change in Contract Price. The Engineer's denial of an "or-equal" request will be final and binding, and may not be reversed through an appeal under any provision of the Contract.

E. *Treatment as a Substitution Request*: If Engineer determines that an item of equipment or material proposed by Contractor does not qualify as an "or-equal" item, Contractor may request that Engineer consider the item a proposed substitute pursuant to Paragraph 7.06.

7.06 *Substitutes*

A. *Contractor's Request; Governing Criteria*: Unless the specification or description of an item of equipment or material required to be furnished under the Contract Documents contains or is followed by words reading that no substitution is permitted, Contractor may request that Engineer authorize the use of other items of equipment or material under the circumstances described below. To the extent possible such requests must be made before commencement of related construction at the Site.

1. Contractor shall submit sufficient information as provided below to allow Engineer to determine if the item of material or equipment proposed is functionally equivalent to that named and an acceptable substitute therefor. Engineer will not accept requests for review of proposed substitute items of equipment or material from anyone other than Contractor.

2. The requirements for review by Engineer will be as set forth in Paragraph 7.06.B, as supplemented by the Specifications, and as Engineer may decide is appropriate under the circumstances.

Copyright© 2018 National Society of Professional Engineers, American Council of Engineering Companies, and American Society of Civil Engineers. All rights reserved.

3. Contractor shall make written application to Engineer for review of a proposed substitute item of equipment or material that Contractor seeks to furnish or use. The application:
   a. will certify that the proposed substitute item will:
      1) perform adequately the functions and achieve the results called for by the general design;
      2) be similar in substance to the item specified; and
      3) be suited to the same use as the item specified.
   b. will state:
      1) the extent, if any, to which the use of the proposed substitute item will necessitate a change in Contract Times;
      2) whether use of the proposed substitute item in the Work will require a change in any of the Contract Documents (or in the provisions of any other direct contract with Owner for other work on the Project) to adapt the design to the proposed substitute item; and
      3) whether incorporation or use of the proposed substitute item in connection with the Work is subject to payment of any license fee or royalty.
   c. will identify:
      1) all variations of the proposed substitute item from the item specified; and
      2) available engineering, sales, maintenance, repair, and replacement services.
   d. will contain an itemized estimate of all costs or credits that will result directly or indirectly from use of such substitute item, including but not limited to changes in Contract Price, shared savings, costs of redesign, and claims of other contractors affected by any resulting change.

B. *Engineer's Evaluation and Determination*: Engineer will be allowed a reasonable time to evaluate each substitute request, and to obtain comments and direction from Owner. Engineer may require Contractor to furnish additional data about the proposed substitute item. Engineer will be the sole judge of acceptability. No substitute will be ordered, furnished, installed, or utilized until Engineer's review is complete and Engineer determines that the proposed item is an acceptable substitute. Engineer's determination will be evidenced by a Field Order or a proposed Change Order accounting for the substitution itself and all related impacts, including changes in Contract Price or Contract Times. Engineer will advise Contractor in writing of any negative determination.

C. *Special Guarantee*: Owner may require Contractor to furnish at Contractor's expense a special performance guarantee or other surety with respect to any substitute.

D. *Reimbursement of Engineer's Cost*: Engineer will record Engineer's costs in evaluating a substitute proposed or submitted by Contractor. Whether or not Engineer approves a substitute so proposed or submitted by Contractor, Contractor shall reimburse Owner for the reasonable charges of Engineer for evaluating each such proposed substitute. Contractor shall also reimburse Owner for the reasonable charges of Engineer for making changes in the Contract Documents (or in the provisions of any other direct contract with Owner) resulting from the acceptance of each proposed substitute.

EJCDC® C-700, Standard General Conditions of the Construction Contract.
Copyright© 2018 National Society of Professional Engineers, American Council of Engineering Companies, and American Society of Civil Engineers. All rights reserved.

E. *Contractor's Expense*: Contractor shall provide all data in support of any proposed substitute at Contractor's expense.

F. *Effect of Engineer's Determination*: If Engineer approves the substitution request, Contractor shall execute the proposed Change Order and proceed with the substitution. The Engineer's denial of a substitution request will be final and binding, and may not be reversed through an appeal under any provision of the Contract. Contractor may challenge the scope of reimbursement costs imposed under Paragraph 7.06.D, by timely submittal of a Change Proposal.

7.07 *Concerning Subcontractors and Suppliers*

A. Contractor may retain Subcontractors and Suppliers for the performance of parts of the Work. Such Subcontractors and Suppliers must be acceptable to Owner. The Contractor's retention of a Subcontractor or Supplier for the performance of parts of the Work will not relieve Contractor's obligation to Owner to perform and complete the Work in accordance with the Contract Documents.

B. Contractor shall retain specific Subcontractors and Suppliers for the performance of designated parts of the Work if required by the Contract to do so.

C. Subsequent to the submittal of Contractor's Bid or final negotiation of the terms of the Contract, Owner may not require Contractor to retain any Subcontractor or Supplier to furnish or perform any of the Work against which Contractor has reasonable objection.

D. Prior to entry into any binding subcontract or purchase order, Contractor shall submit to Owner the identity of the proposed Subcontractor or Supplier (unless Owner has already deemed such proposed Subcontractor or Supplier acceptable during the bidding process or otherwise). Such proposed Subcontractor or Supplier shall be deemed acceptable to Owner unless Owner raises a substantive, reasonable objection within 5 days.

E. Owner may require the replacement of any Subcontractor or Supplier. Owner also may require Contractor to retain specific replacements; provided, however, that Owner may not require a replacement to which Contractor has a reasonable objection. If Contractor has submitted the identity of certain Subcontractors or Suppliers for acceptance by Owner, and Owner has accepted it (either in writing or by failing to make written objection thereto), then Owner may subsequently revoke the acceptance of any such Subcontractor or Supplier so identified solely on the basis of substantive, reasonable objection after due investigation. Contractor shall submit an acceptable replacement for the rejected Subcontractor or Supplier.

F. If Owner requires the replacement of any Subcontractor or Supplier retained by Contractor to perform any part of the Work, then Contractor shall be entitled to an adjustment in Contract Price or Contract Times, with respect to the replacement; and Contractor shall initiate a Change Proposal for such adjustment within 30 days of Owner's requirement of replacement.

G. No acceptance by Owner of any such Subcontractor or Supplier, whether initially or as a replacement, will constitute a waiver of the right of Owner to the completion of the Work in accordance with the Contract Documents.

EJCDC® C-700, Standard General Conditions of the Construction Contract.
Copyright© 2018 National Society of Professional Engineers, American Council of Engineering Companies, and American Society of Civil Engineers. All rights reserved.

H. On a monthly basis, Contractor shall submit to Engineer a complete list of all Subcontractors and Suppliers having a direct contract with Contractor, and of all other Subcontractors and Suppliers known to Contractor at the time of submittal.

I. Contractor shall be solely responsible for scheduling and coordinating the work of Subcontractors and Suppliers.

J. The divisions and sections of the Specifications and the identifications of any Drawings do not control Contractor in dividing the Work among Subcontractors or Suppliers, or in delineating the Work to be performed by any specific trade.

K. All Work performed for Contractor by a Subcontractor or Supplier must be pursuant to an appropriate contractual agreement that specifically binds the Subcontractor or Supplier to the applicable terms and conditions of the Contract for the benefit of Owner and Engineer.

L. Owner may furnish to any Subcontractor or Supplier, to the extent practicable, information about amounts paid to Contractor for Work performed for Contractor by the Subcontractor or Supplier.

M. Contractor shall restrict all Subcontractors and Suppliers from communicating with Engineer or Owner, except through Contractor or in case of an emergency, or as otherwise expressly allowed in this Contract.

7.08 *Patent Fees and Royalties*

A. Contractor shall pay all license fees and royalties and assume all costs incident to the use in the performance of the Work or the incorporation in the Work of any invention, design, process, product, or device which is the subject of patent rights or copyrights held by others. If an invention, design, process, product, or device is specified in the Contract Documents for use in the performance of the Work and if, to the actual knowledge of Owner or Engineer, its use is subject to patent rights or copyrights calling for the payment of any license fee or royalty to others, the existence of such rights will be disclosed in the Contract Documents.

B. To the fullest extent permitted by Laws and Regulations, Owner shall indemnify and hold harmless Contractor, and its officers, directors, members, partners, employees, agents, consultants, and subcontractors, from and against all claims, costs, losses, and damages (including but not limited to all fees and charges of engineers, architects, attorneys, and other professionals, and all court or arbitration or other dispute resolution costs) arising out of or relating to any infringement of patent rights or copyrights incident to the use in the performance of the Work or resulting from the incorporation in the Work of any invention, design, process, product, or device specified in the Contract Documents, but not identified as being subject to payment of any license fee or royalty to others required by patent rights or copyrights.

C. To the fullest extent permitted by Laws and Regulations, Contractor shall indemnify and hold harmless Owner and Engineer, and the officers, directors, members, partners, employees, agents, consultants and subcontractors of each and any of them, from and against all claims, costs, losses, and damages (including but not limited to all fees and charges of engineers, architects, attorneys, and other professionals and all court or arbitration or other dispute resolution costs) arising out of or relating to any infringement of patent rights or copyrights incident to the use in the performance of the Work or resulting from the incorporation in the Work of any invention, design, process, product, or device not specified in the Contract Documents.

Copyright© 2018 National Society of Professional Engineers, American Council of Engineering Companies, and American Society of Civil Engineers. All rights reserved.

7.09 *Permits*

A. Unless otherwise provided in the Contract Documents, Contractor shall obtain and pay for all construction permits, licenses, and certificates of occupancy. Owner shall assist Contractor, when necessary, in obtaining such permits and licenses. Contractor shall pay all governmental charges and inspection fees necessary for the prosecution of the Work which are applicable at the time of the submission of Contractor's Bid (or when Contractor became bound under a negotiated contract). Owner shall pay all charges of utility owners for connections for providing permanent service to the Work.

7.10 *Taxes*

A. Contractor shall pay all sales, consumer, use, and other similar taxes required to be paid by Contractor in accordance with the Laws and Regulations of the place of the Project which are applicable during the performance of the Work.

7.11 *Laws and Regulations*

A. Contractor shall give all notices required by and shall comply with all Laws and Regulations applicable to the performance of the Work. Neither Owner nor Engineer shall be responsible for monitoring Contractor's compliance with any Laws or Regulations.

B. If Contractor performs any Work or takes any other action knowing or having reason to know that it is contrary to Laws or Regulations, Contractor shall bear all resulting costs and losses, and shall indemnify and hold harmless Owner and Engineer, and the officers, directors, members, partners, employees, agents, consultants, and subcontractors of each and any of them, from and against all claims, costs, losses, and damages (including but not limited to all fees and charges of engineers, architects, attorneys, and other professionals and all court or arbitration or other dispute resolution costs) arising out of or relating to such Work or other action. It is not Contractor's responsibility to make certain that the Work described in the Contract Documents is in accordance with Laws and Regulations, but this does not relieve Contractor of its obligations under Paragraph 3.03.

C. Owner or Contractor may give written notice to the other party of any changes after the submission of Contractor's Bid (or after the date when Contractor became bound under a negotiated contract) in Laws or Regulations having an effect on the cost or time of performance of the Work, including but not limited to changes in Laws or Regulations having an effect on procuring permits and on sales, use, value-added, consumption, and other similar taxes. If Owner and Contractor are unable to agree on entitlement to or on the amount or extent, if any, of any adjustment in Contract Price or Contract Times resulting from such changes, then within 30 days of such written notice Contractor may submit a Change Proposal, or Owner may initiate a Claim.

7.12 *Record Documents*

A. Contractor shall maintain in a safe place at the Site one printed record copy of all Drawings, Specifications, Addenda, Change Orders, Work Change Directives, Field Orders, written interpretations and clarifications, and approved Shop Drawings. Contractor shall keep such record documents in good order and annotate them to show changes made during construction. These record documents, together with all approved Samples, will be available to Engineer for reference. Upon completion of the Work, Contractor shall deliver these record documents to Engineer.

Copyright© 2018 National Society of Professional Engineers, American Council of Engineering Companies, and American Society of Civil Engineers. All rights reserved.

7.13 *Safety and Protection*

A. Contractor shall be solely responsible for initiating, maintaining, and supervising all safety precautions and programs in connection with the Work. Such responsibility does not relieve Subcontractors of their responsibility for the safety of persons or property in the performance of their work, nor for compliance with applicable safety Laws and Regulations.

B. Contractor shall designate a qualified and experienced safety representative whose duties and responsibilities are the prevention of Work-related accidents and the maintenance and supervision of safety precautions and programs.

C. Contractor shall take all necessary precautions for the safety of, and shall provide the necessary protection to prevent damage, injury, or loss to:

1. all persons on the Site or who may be affected by the Work;

2. all the Work and materials and equipment to be incorporated therein, whether in storage on or off the Site; and

3. other property at the Site or adjacent thereto, including trees, shrubs, lawns, walks, pavements, roadways, structures, other work in progress, utilities, and Underground Facilities not designated for removal, relocation, or replacement in the course of construction.

D. All damage, injury, or loss to any property referred to in Paragraph 7.13.C.2 or 7.13.C.3 caused, directly or indirectly, in whole or in part, by Contractor, any Subcontractor, Supplier, or any other individual or entity directly or indirectly employed by any of them to perform any of the Work, or anyone for whose acts any of them may be liable, shall be remedied by Contractor at its expense (except damage or loss attributable to the fault of Drawings or Specifications or to the acts or omissions of Owner or Engineer or anyone employed by any of them, or anyone for whose acts any of them may be liable, and not attributable, directly or indirectly, in whole or in part, to the fault or negligence of Contractor or any Subcontractor, Supplier, or other individual or entity directly or indirectly employed by any of them).

E. Contractor shall comply with all applicable Laws and Regulations relating to the safety of persons or property, or to the protection of persons or property from damage, injury, or loss; and shall erect and maintain all necessary safeguards for such safety and protection.

F. Contractor shall notify Owner; the owners of adjacent property; the owners of Underground Facilities and other utilities (if the identity of such owners is known to Contractor); and other contractors and utility owners performing work at or adjacent to the Site, in writing, when Contractor knows that prosecution of the Work may affect them, and shall cooperate with them in the protection, removal, relocation, and replacement of their property or work in progress.

G. Contractor shall comply with the applicable requirements of Owner's safety programs, if any. Any Owner's safety programs that are applicable to the Work are identified or included in the Supplementary Conditions or Specifications.

H. Contractor shall inform Owner and Engineer of the specific requirements of Contractor's safety program with which Owner's and Engineer's employees and representatives must comply while at the Site.

EJCDC® C-700, Standard General Conditions of the Construction Contract.
Copyright© 2018 National Society of Professional Engineers, American Council of Engineering Companies, and American Society of Civil Engineers. All rights reserved.

I. Contractor's duties and responsibilities for safety and protection will continue until all the Work is completed, Engineer has issued a written notice to Owner and Contractor in accordance with Paragraph 15.06.C that the Work is acceptable, and Contractor has left the Site (except as otherwise expressly provided in connection with Substantial Completion).

J. Contractor's duties and responsibilities for safety and protection will resume whenever Contractor or any Subcontractor or Supplier returns to the Site to fulfill warranty or correction obligations, or to conduct other tasks arising from the Contract Documents.

7.14 *Hazard Communication Programs*

A. Contractor shall be responsible for coordinating any exchange of safety data sheets (formerly known as material safety data sheets) or other hazard communication information required to be made available to or exchanged between or among employers at the Site in accordance with Laws or Regulations.

7.15 *Emergencies*

A. In emergencies affecting the safety or protection of persons or the Work or property at the Site or adjacent thereto, Contractor is obligated to act to prevent damage, injury, or loss. Contractor shall give Engineer prompt written notice if Contractor believes that any significant changes in the Work or variations from the Contract Documents have been caused by an emergency, or are required as a result of Contractor's response to an emergency. If Engineer determines that a change in the Contract Documents is required because of an emergency or Contractor's response, a Work Change Directive or Change Order will be issued.

7.16 *Submittals*

A. *Shop Drawing and Sample Requirements*

1. Before submitting a Shop Drawing or Sample, Contractor shall:

a. review and coordinate the Shop Drawing or Sample with other Shop Drawings and Samples and with the requirements of the Work and the Contract Documents;

b. determine and verify:

1) all field measurements, quantities, dimensions, specified performance and design criteria, installation requirements, materials, catalog numbers, and similar information with respect to the Submittal;

2) the suitability of all materials and equipment offered with respect to the indicated application, fabrication, shipping, handling, storage, assembly, and installation pertaining to the performance of the Work; and

3) all information relative to Contractor's responsibilities for means, methods, techniques, sequences, and procedures of construction, and safety precautions and programs incident thereto;

c. confirm that the Submittal is complete with respect to all related data included in the Submittal.

2. Each Shop Drawing or Sample must bear a stamp or specific written certification that Contractor has satisfied Contractor's obligations under the Contract Documents with respect to Contractor's review of that Submittal, and that Contractor approves the Submittal.

Copyright© 2018 National Society of Professional Engineers, American Council of Engineering Companies, and American Society of Civil Engineers. All rights reserved.

3. With each Shop Drawing or Sample, Contractor shall give Engineer specific written notice of any variations that the Submittal may have from the requirements of the Contract Documents. This notice must be set forth in a written communication separate from the Submittal; and, in addition, in the case of a Shop Drawing by a specific notation made on the Shop Drawing itself.

B. *Submittal Procedures for Shop Drawings and Samples*: Contractor shall label and submit Shop Drawings and Samples to Engineer for review and approval in accordance with the accepted Schedule of Submittals.

1. *Shop Drawings*

a. Contractor shall submit the number of copies required in the Specifications.

b. Data shown on the Shop Drawings must be complete with respect to quantities, dimensions, specified performance and design criteria, materials, and similar data to show Engineer the services, materials, and equipment Contractor proposes to provide, and to enable Engineer to review the information for the limited purposes required by Paragraph 7.16.C.

2. *Samples*

a. Contractor shall submit the number of Samples required in the Specifications.

b. Contractor shall clearly identify each Sample as to material, Supplier, pertinent data such as catalog numbers, the use for which intended and other data as Engineer may require to enable Engineer to review the Submittal for the limited purposes required by Paragraph 7.16.C.

3. Where a Shop Drawing or Sample is required by the Contract Documents or the Schedule of Submittals, any related Work performed prior to Engineer's review and approval of the pertinent submittal will be at the sole expense and responsibility of Contractor.

C. *Engineer's Review of Shop Drawings and Samples*

1. Engineer will provide timely review of Shop Drawings and Samples in accordance with the accepted Schedule of Submittals. Engineer's review and approval will be only to determine if the items covered by the Submittals will, after installation or incorporation in the Work, comply with the requirements of the Contract Documents, and be compatible with the design concept of the completed Project as a functioning whole as indicated by the Contract Documents.

2. Engineer's review and approval will not extend to means, methods, techniques, sequences, or procedures of construction, or to safety precautions or programs incident thereto.

3. Engineer's review and approval of a separate item as such will not indicate approval of the assembly in which the item functions.

4. Engineer's review and approval of a Shop Drawing or Sample will not relieve Contractor from responsibility for any variation from the requirements of the Contract Documents unless Contractor has complied with the requirements of Paragraph 7.16.A.3 and Engineer has given written approval of each such variation by specific written notation thereof incorporated in or accompanying the Shop Drawing or Sample. Engineer will

Copyright© 2018 National Society of Professional Engineers, American Council of Engineering Companies, and American Society of Civil Engineers. All rights reserved.

document any such approved variation from the requirements of the Contract Documents in a Field Order or other appropriate Contract modification.

5. Engineer's review and approval of a Shop Drawing or Sample will not relieve Contractor from responsibility for complying with the requirements of Paragraphs 7.16.A and B.

6. Engineer's review and approval of a Shop Drawing or Sample, or of a variation from the requirements of the Contract Documents, will not, under any circumstances, change the Contract Times or Contract Price, unless such changes are included in a Change Order.

7. Neither Engineer's receipt, review, acceptance, or approval of a Shop Drawing or Sample will result in such item becoming a Contract Document.

8. Contractor shall perform the Work in compliance with the requirements and commitments set forth in approved Shop Drawings and Samples, subject to the provisions of Paragraph 7.16.C.4.

D. *Resubmittal Procedures for Shop Drawings and Samples*

1. Contractor shall make corrections required by Engineer and shall return the required number of corrected copies of Shop Drawings and submit, as required, new Samples for review and approval. Contractor shall direct specific attention in writing to revisions other than the corrections called for by Engineer on previous Submittals.

2. Contractor shall furnish required Shop Drawing and Sample submittals with sufficient information and accuracy to obtain required approval of an item with no more than two resubmittals. Engineer will record Engineer's time for reviewing a third or subsequent resubmittal of a Shop Drawing or Sample, and Contractor shall be responsible for Engineer's charges to Owner for such time. Owner may impose a set-off against payments due Contractor to secure reimbursement for such charges.

3. If Contractor requests a change of a previously approved Shop Drawing or Sample, Contractor shall be responsible for Engineer's charges to Owner for its review time, and Owner may impose a set-off against payments due Contractor to secure reimbursement for such charges, unless the need for such change is beyond the control of Contractor.

E. *Submittals Other than Shop Drawings, Samples, and Owner-Delegated Designs*

1. The following provisions apply to all Submittals other than Shop Drawings, Samples, and Owner-delegated designs:

   a. Contractor shall submit all such Submittals to the Engineer in accordance with the Schedule of Submittals and pursuant to the applicable terms of the Contract Documents.

   b. Engineer will provide timely review of all such Submittals in accordance with the Schedule of Submittals and return such Submittals with a notation of either Accepted or Not Accepted. Any such Submittal that is not returned within the time established in the Schedule of Submittals will be deemed accepted.

   c. Engineer's review will be only to determine if the Submittal is acceptable under the requirements of the Contract Documents as to general form and content of the Submittal.

Copyright© 2018 National Society of Professional Engineers, American Council of Engineering Companies, and American Society of Civil Engineers. All rights reserved.

d. If any such Submittal is not accepted, Contractor shall confer with Engineer regarding the reason for the non-acceptance, and resubmit an acceptable document.

2. Procedures for the submittal and acceptance of the Progress Schedule, the Schedule of Submittals, and the Schedule of Values are set forth in Paragraphs 2.03. 2.04, and 2.05.

F. Owner-delegated Designs: Submittals pursuant to Owner-delegated designs are governed by the provisions of Paragraph 7.19.

7.17 *Contractor's General Warranty and Guarantee*

A. Contractor warrants and guarantees to Owner that all Work will be in accordance with the Contract Documents and will not be defective. Engineer is entitled to rely on Contractor's warranty and guarantee.

B. Owner's rights under this warranty and guarantee are in addition to, and are not limited by, Owner's rights under the correction period provisions of Paragraph 15.08. The time in which Owner may enforce its warranty and guarantee rights under this Paragraph 7.17 is limited only by applicable Laws and Regulations restricting actions to enforce such rights; provided, however, that after the end of the correction period under Paragraph 15.08:

1. Owner shall give Contractor written notice of any defective Work within 60 days of the discovery that such Work is defective; and

2. Such notice will be deemed the start of an event giving rise to a Claim under Paragraph 12.01.B, such that any related Claim must be brought within 30 days of the notice.

C. Contractor's warranty and guarantee hereunder excludes defects or damage caused by:

1. abuse, or improper modification, maintenance, or operation, by persons other than Contractor, Subcontractors, Suppliers, or any other individual or entity for whom Contractor is responsible; or

2. normal wear and tear under normal usage.

D. Contractor's obligation to perform and complete the Work in accordance with the Contract Documents is absolute. None of the following will constitute an acceptance of Work that is not in accordance with the Contract Documents, a release of Contractor's obligation to perform the Work in accordance with the Contract Documents, or a release of Owner's warranty and guarantee rights under this Paragraph 7.17:

1. Observations by Engineer;

2. Recommendation by Engineer or payment by Owner of any progress or final payment;

3. The issuance of a certificate of Substantial Completion by Engineer or any payment related thereto by Owner;

4. Use or occupancy of the Work or any part thereof by Owner;

5. Any review and approval of a Shop Drawing or Sample submittal;

6. The issuance of a notice of acceptability by Engineer;

7. The end of the correction period established in Paragraph 15.08;

8. Any inspection, test, or approval by others; or

EJCDC® C-700, Standard General Conditions of the Construction Contract.
Copyright© 2018 National Society of Professional Engineers, American Council of Engineering Companies, and American Society of Civil Engineers. All rights reserved.

9. Any correction of defective Work by Owner.

E. If the Contract requires the Contractor to accept the assignment of a contract entered into by Owner, then the specific warranties, guarantees, and correction obligations contained in the assigned contract will govern with respect to Contractor's performance obligations to Owner for the Work described in the assigned contract.

7.18 *Indemnification*

A. To the fullest extent permitted by Laws and Regulations, and in addition to any other obligations of Contractor under the Contract or otherwise, Contractor shall indemnify and hold harmless Owner and Engineer, and the officers, directors, members, partners, employees, agents, consultants and subcontractors of each and any of them, from losses, damages, costs, and judgments (including but not limited to all fees and charges of engineers, architects, attorneys, and other professionals, and all court or arbitration or other dispute resolution costs) arising from third-party claims or actions relating to or resulting from the performance or furnishing of the Work, provided that any such claim, action, loss, cost, judgment or damage is attributable to bodily injury, sickness, disease, or death, or to damage to or destruction of tangible property (other than the Work itself), including the loss of use resulting therefrom, but only to the extent caused by any negligent act or omission of Contractor, any Subcontractor, any Supplier, or any individual or entity directly or indirectly employed by any of them to perform any of the Work, or anyone for whose acts any of them may be liable.

B. In any and all claims against Owner or Engineer, or any of their officers, directors, members, partners, employees, agents, consultants, or subcontractors, by any employee (or the survivor or personal representative of such employee) of Contractor, any Subcontractor, any Supplier, or any individual or entity directly or indirectly employed by any of them to perform any of the Work, or anyone for whose acts any of them may be liable, the indemnification obligation under Paragraph 7.18.A will not be limited in any way by any limitation on the amount or type of damages, compensation, or benefits payable by or for Contractor or any such Subcontractor, Supplier, or other individual or entity under workers' compensation acts, disability benefit acts, or other employee benefit acts.

7.19 *Delegation of Professional Design Services*

A. Owner may require Contractor to provide professional design services for a portion of the Work by express delegation in the Contract Documents. Such delegation will specify the performance and design criteria that such services must satisfy, and the Submittals that Contractor must furnish to Engineer with respect to the Owner-delegated design.

B. Contractor shall cause such Owner-delegated professional design services to be provided pursuant to the professional standard of care by a properly licensed design professional, whose signature and seal must appear on all drawings, calculations, specifications, certifications, and Submittals prepared by such design professional. Such design professional must issue all certifications of design required by Laws and Regulations.

C. If a Shop Drawing or other Submittal related to the Owner-delegated design is prepared by Contractor, a Subcontractor, or others for submittal to Engineer, then such Shop Drawing or other Submittal must bear the written approval of Contractor's design professional when submitted by Contractor to Engineer.

Copyright© 2018 National Society of Professional Engineers, American Council of Engineering Companies, and American Society of Civil Engineers. All rights reserved.

D. Owner and Engineer shall be entitled to rely upon the adequacy, accuracy, and completeness of the services, certifications, and approvals performed or provided by the design professionals retained or employed by Contractor under an Owner-delegated design, subject to the professional standard of care and the performance and design criteria stated in the Contract Documents.

E. Pursuant to this Paragraph 7.19, Engineer's review, approval, and other determinations regarding design drawings, calculations, specifications, certifications, and other Submittals furnished by Contractor pursuant to an Owner-delegated design will be only for the following limited purposes:

1. Checking for conformance with the requirements of this Paragraph 7.19;

2. Confirming that Contractor (through its design professionals) has used the performance and design criteria specified in the Contract Documents; and

3. Establishing that the design furnished by Contractor is consistent with the design concept expressed in the Contract Documents.

F. Contractor shall not be responsible for the adequacy of performance or design criteria specified by Owner or Engineer.

G. Contractor is not required to provide professional services in violation of applicable Laws and Regulations.

ARTICLE 8—OTHER WORK AT THE SITE

8.01 *Other Work*

A. In addition to and apart from the Work under the Contract Documents, the Owner may perform other work at or adjacent to the Site. Such other work may be performed by Owner's employees, or through contracts between the Owner and third parties. Owner may also arrange to have third-party utility owners perform work on their utilities and facilities at or adjacent to the Site.

B. If Owner performs other work at or adjacent to the Site with Owner's employees, or through contracts for such other work, then Owner shall give Contractor written notice thereof prior to starting any such other work. If Owner has advance information regarding the start of any third-party utility work that Owner has arranged to take place at or adjacent to the Site, Owner shall provide such information to Contractor.

C. Contractor shall afford proper and safe access to the Site to each contractor that performs such other work, each utility owner performing other work, and Owner, if Owner is performing other work with Owner's employees, and provide a reasonable opportunity for the introduction and storage of materials and equipment and the execution of such other work.

D. Contractor shall do all cutting, fitting, and patching of the Work that may be required to properly connect or otherwise make its several parts come together and properly integrate with such other work. Contractor shall not endanger any work of others by cutting, excavating, or otherwise altering such work; provided, however, that Contractor may cut or alter others' work with the written consent of Engineer and the others whose work will be affected.

Copyright© 2018 National Society of Professional Engineers, American Council of Engineering Companies, and American Society of Civil Engineers. All rights reserved.

E. If the proper execution or results of any part of Contractor's Work depends upon work performed by others, Contractor shall inspect such other work and promptly report to Engineer in writing any delays, defects, or deficiencies in such other work that render it unavailable or unsuitable for the proper execution and results of Contractor's Work. Contractor's failure to so report will constitute an acceptance of such other work as fit and proper for integration with Contractor's Work except for latent defects and deficiencies in such other work.

F. The provisions of this article are not applicable to work that is performed by third-party utilities or other third-party entities without a contract with Owner, or that is performed without having been arranged by Owner. If such work occurs, then any related delay, disruption, or interference incurred by Contractor is governed by the provisions of Paragraph 4.05.C.3.

8.02 *Coordination*

A. If Owner intends to contract with others for the performance of other work at or adjacent to the Site, to perform other work at or adjacent to the Site with Owner's employees, or to arrange to have utility owners perform work at or adjacent to the Site, the following will be set forth in the Supplementary Conditions or provided to Contractor prior to the start of any such other work:

1. The identity of the individual or entity that will have authority and responsibility for coordination of the activities among the various contractors;

2. An itemization of the specific matters to be covered by such authority and responsibility; and

3. The extent of such authority and responsibilities.

B. Unless otherwise provided in the Supplementary Conditions, Owner shall have sole authority and responsibility for such coordination.

8.03 *Legal Relationships*

A. If, in the course of performing other work for Owner at or adjacent to the Site, the Owner's employees, any other contractor working for Owner, or any utility owner that Owner has arranged to perform work, causes damage to the Work or to the property of Contractor or its Subcontractors, or delays, disrupts, interferes with, or increases the scope or cost of the performance of the Work, through actions or inaction, then Contractor shall be entitled to an equitable adjustment in the Contract Price or the Contract Times. Contractor must submit any Change Proposal seeking an equitable adjustment in the Contract Price or the Contract Times under this paragraph within 30 days of the damaging, delaying, disrupting, or interfering event. The entitlement to, and extent of, any such equitable adjustment will take into account information (if any) regarding such other work that was provided to Contractor in the Contract Documents prior to the submittal of the Bid or the final negotiation of the terms of the Contract, and any remedies available to Contractor under Laws or Regulations concerning utility action or inaction. When applicable, any such equitable adjustment in Contract Price will be conditioned on Contractor assigning to Owner all Contractor's rights against such other contractor or utility owner with respect to the damage, delay, disruption, or interference that is the subject of the adjustment. Contractor's entitlement to an adjustment of the Contract Times or Contract Price is subject to the provisions of Paragraphs 4.05.D and 4.05.E.

EJCDC® C-700, Standard General Conditions of the Construction Contract.
Copyright© 2018 National Society of Professional Engineers, American Council of Engineering Companies, and American Society of Civil Engineers. All rights reserved.

B. Contractor shall take reasonable and customary measures to avoid damaging, delaying, disrupting, or interfering with the work of Owner, any other contractor, or any utility owner performing other work at or adjacent to the Site.

1. If Contractor fails to take such measures and as a result damages, delays, disrupts, or interferes with the work of any such other contractor or utility owner, then Owner may impose a set-off against payments due Contractor, and assign to such other contractor or utility owner the Owner's contractual rights against Contractor with respect to the breach of the obligations set forth in this Paragraph 8.03.B.

2. When Owner is performing other work at or adjacent to the Site with Owner's employees, Contractor shall be liable to Owner for damage to such other work, and for the reasonable direct delay, disruption, and interference costs incurred by Owner as a result of Contractor's failure to take reasonable and customary measures with respect to Owner's other work. In response to such damage, delay, disruption, or interference, Owner may impose a set-off against payments due Contractor.

C. If Contractor damages, delays, disrupts, or interferes with the work of any other contractor, or any utility owner performing other work at or adjacent to the Site, through Contractor's failure to take reasonable and customary measures to avoid such impacts, or if any claim arising out of Contractor's actions, inactions, or negligence in performance of the Work at or adjacent to the Site is made by any such other contractor or utility owner against Contractor, Owner, or Engineer, then Contractor shall (1) promptly attempt to settle the claim as to all parties through negotiations with such other contractor or utility owner, or otherwise resolve the claim by arbitration or other dispute resolution proceeding or at law, and (2) indemnify and hold harmless Owner and Engineer, and the officers, directors, members, partners, employees, agents, consultants and subcontractors of each and any of them from and against any such claims, and against all costs, losses, and damages (including but not limited to all fees and charges of engineers, architects, attorneys, and other professionals and all court or arbitration or other dispute resolution costs) arising out of or relating to such damage, delay, disruption, or interference.

ARTICLE 9—OWNER'S RESPONSIBILITIES

9.01 *Communications to Contractor*

A. Except as otherwise provided in these General Conditions, Owner shall issue all communications to Contractor through Engineer.

9.02 *Replacement of Engineer*

A. Owner may at its discretion appoint an engineer to replace Engineer, provided Contractor makes no reasonable objection to the replacement engineer. The replacement engineer's status under the Contract Documents will be that of the former Engineer.

9.03 *Furnish Data*

A. Owner shall promptly furnish the data required of Owner under the Contract Documents.

9.04 *Pay When Due*

A. Owner shall make payments to Contractor when they are due as provided in the Agreement.

Copyright© 2018 National Society of Professional Engineers, American Council of Engineering Companies, and American Society of Civil Engineers. All rights reserved.

9.05 *Lands and Easements; Reports, Tests, and Drawings*

A. Owner's duties with respect to providing lands and easements are set forth in Paragraph 5.01.

B. Owner's duties with respect to providing engineering surveys to establish reference points are set forth in Paragraph 4.03.

C. Article 5 refers to Owner's identifying and making available to Contractor copies of reports of explorations and tests of conditions at the Site, and drawings of physical conditions relating to existing surface or subsurface structures at the Site.

9.06 *Insurance*

A. Owner's responsibilities, if any, with respect to purchasing and maintaining liability and property insurance are set forth in Article 6.

9.07 *Change Orders*

A. Owner's responsibilities with respect to Change Orders are set forth in Article 11.

9.08 *Inspections, Tests, and Approvals*

A. Owner's responsibility with respect to certain inspections, tests, and approvals is set forth in Paragraph 14.02.B.

9.09 *Limitations on Owner's Responsibilities*

A. The Owner shall not supervise, direct, or have control or authority over, nor be responsible for, Contractor's means, methods, techniques, sequences, or procedures of construction, or the safety precautions and programs incident thereto, or for any failure of Contractor to comply with Laws and Regulations applicable to the performance of the Work. Owner will not be responsible for Contractor's failure to perform the Work in accordance with the Contract Documents.

9.10 *Undisclosed Hazardous Environmental Condition*

A. Owner's responsibility in respect to an undisclosed Hazardous Environmental Condition is set forth in Paragraph 5.06.

9.11 *Evidence of Financial Arrangements*

A. Upon request of Contractor, Owner shall furnish Contractor reasonable evidence that financial arrangements have been made to satisfy Owner's obligations under the Contract (including obligations under proposed changes in the Work).

9.12 *Safety Programs*

A. While at the Site, Owner's employees and representatives shall comply with the specific applicable requirements of Contractor's safety programs of which Owner has been informed.

B. Owner shall furnish copies of any applicable Owner safety programs to Contractor.

Copyright© 2018 National Society of Professional Engineers, American Council of Engineering Companies, and American Society of Civil Engineers. All rights reserved.

ARTICLE 10—ENGINEER'S STATUS DURING CONSTRUCTION

10.01 *Owner's Representative*

A. Engineer will be Owner's representative during the construction period. The duties and responsibilities and the limitations of authority of Engineer as Owner's representative during construction are set forth in the Contract.

10.02 *Visits to Site*

A. Engineer will make visits to the Site at intervals appropriate to the various stages of construction as Engineer deems necessary in order to observe, as an experienced and qualified design professional, the progress that has been made and the quality of the various aspects of Contractor's executed Work. Based on information obtained during such visits and observations, Engineer, for the benefit of Owner, will determine, in general, if the Work is proceeding in accordance with the Contract Documents. Engineer will not be required to make exhaustive or continuous inspections on the Site to check the quality or quantity of the Work. Engineer's efforts will be directed toward providing for Owner a greater degree of confidence that the completed Work will conform generally to the Contract Documents. On the basis of such visits and observations, Engineer will keep Owner informed of the progress of the Work and will endeavor to guard Owner against defective Work.

B. Engineer's visits and observations are subject to all the limitations on Engineer's authority and responsibility set forth in Paragraph 10.07. Particularly, but without limitation, during or as a result of Engineer's visits or observations of Contractor's Work, Engineer will not supervise, direct, control, or have authority over or be responsible for Contractor's means, methods, techniques, sequences, or procedures of construction, or the safety precautions and programs incident thereto, or for any failure of Contractor to comply with Laws and Regulations applicable to the performance of the Work.

10.03 *Resident Project Representative*

A. If Owner and Engineer have agreed that Engineer will furnish a Resident Project Representative to represent Engineer at the Site and assist Engineer in observing the progress and quality of the Work, then the authority and responsibilities of any such Resident Project Representative will be as provided in the Supplementary Conditions, and limitations on the responsibilities thereof will be as provided in the Supplementary Conditions and in Paragraph 10.07.

B. If Owner designates an individual or entity who is not Engineer's consultant, agent, or employee to represent Owner at the Site, then the responsibilities and authority of such individual or entity will be as provided in the Supplementary Conditions.

10.04 *Engineer's Authority*

A. Engineer has the authority to reject Work in accordance with Article 14.

B. Engineer's authority as to Submittals is set forth in Paragraph 7.16.

C. Engineer's authority as to design drawings, calculations, specifications, certifications and other Submittals from Contractor in response to Owner's delegation (if any) to Contractor of professional design services, is set forth in Paragraph 7.19.

D. Engineer's authority as to changes in the Work is set forth in Article 11.

EJCDC® C-700, Standard General Conditions of the Construction Contract.
Copyright© 2018 National Society of Professional Engineers, American Council of Engineering Companies, and American Society of Civil Engineers. All rights reserved.

E. Engineer's authority as to Applications for Payment is set forth in Article 15.

10.05 *Determinations for Unit Price Work*

A. Engineer will determine the actual quantities and classifications of Unit Price Work performed by Contractor as set forth in Paragraph 13.03.

10.06 *Decisions on Requirements of Contract Documents and Acceptability of Work*

A. Engineer will render decisions regarding the requirements of the Contract Documents, and judge the acceptability of the Work, pursuant to the specific procedures set forth herein for initial interpretations, Change Proposals, and acceptance of the Work. In rendering such decisions and judgments, Engineer will not show partiality to Owner or Contractor, and will not be liable to Owner, Contractor, or others in connection with any proceedings, interpretations, decisions, or judgments conducted or rendered in good faith.

10.07 *Limitations on Engineer's Authority and Responsibilities*

A. Neither Engineer's authority or responsibility under this Article 10 or under any other provision of the Contract, nor any decision made by Engineer in good faith either to exercise or not exercise such authority or responsibility or the undertaking, exercise, or performance of any authority or responsibility by Engineer, will create, impose, or give rise to any duty in contract, tort, or otherwise owed by Engineer to Contractor, any Subcontractor, any Supplier, any other individual or entity, or to any surety for or employee or agent of any of them.

B. Engineer will not supervise, direct, control, or have authority over or be responsible for Contractor's means, methods, techniques, sequences, or procedures of construction, or the safety precautions and programs incident thereto, or for any failure of Contractor to comply with Laws and Regulations applicable to the performance of the Work. Engineer will not be responsible for Contractor's failure to perform the Work in accordance with the Contract Documents.

C. Engineer will not be responsible for the acts or omissions of Contractor or of any Subcontractor, any Supplier, or of any other individual or entity performing any of the Work.

D. Engineer's review of the final Application for Payment and accompanying documentation, and all maintenance and operating instructions, schedules, guarantees, bonds, certificates of inspection, tests and approvals, and other documentation required to be delivered by Contractor under Paragraph 15.06.A, will only be to determine generally that their content complies with the requirements of, and in the case of certificates of inspections, tests, and approvals, that the results certified indicate compliance with the Contract Documents.

E. The limitations upon authority and responsibility set forth in this Paragraph 10.07 also apply to the Resident Project Representative, if any.

10.08 *Compliance with Safety Program*

A. While at the Site, Engineer's employees and representatives will comply with the specific applicable requirements of Owner's and Contractor's safety programs of which Engineer has been informed.

Copyright© 2018 National Society of Professional Engineers, American Council of Engineering Companies, and American Society of Civil Engineers. All rights reserved.

ARTICLE 11—CHANGES TO THE CONTRACT

11.01 *Amending and Supplementing the Contract*

A. The Contract may be amended or supplemented by a Change Order, a Work Change Directive, or a Field Order.

B. If an amendment or supplement to the Contract includes a change in the Contract Price or the Contract Times, such amendment or supplement must be set forth in a Change Order.

C. All changes to the Contract that involve (1) the performance or acceptability of the Work, (2) the design (as set forth in the Drawings, Specifications, or otherwise), or (3) other engineering or technical matters, must be supported by Engineer's recommendation. Owner and Contractor may amend other terms and conditions of the Contract without the recommendation of the Engineer.

11.02 *Change Orders*

A. Owner and Contractor shall execute appropriate Change Orders covering:

1. Changes in Contract Price or Contract Times which are agreed to by the parties, including any undisputed sum or amount of time for Work actually performed in accordance with a Work Change Directive;

2. Changes in Contract Price resulting from an Owner set-off, unless Contractor has duly contested such set-off;

3. Changes in the Work which are: (a) ordered by Owner pursuant to Paragraph 11.05, (b) required because of Owner's acceptance of defective Work under Paragraph 14.04 or Owner's correction of defective Work under Paragraph 14.07, or (c) agreed to by the parties, subject to the need for Engineer's recommendation if the change in the Work involves the design (as set forth in the Drawings, Specifications, or otherwise) or other engineering or technical matters; and

4. Changes that embody the substance of any final and binding results under: Paragraph 11.03.B, resolving the impact of a Work Change Directive; Paragraph 11.09, concerning Change Proposals; Article 12, Claims; Paragraph 13.02.D, final adjustments resulting from allowances; Paragraph 13.03.D, final adjustments relating to determination of quantities for Unit Price Work; and similar provisions.

B. If Owner or Contractor refuses to execute a Change Order that is required to be executed under the terms of Paragraph 11.02.A, it will be deemed to be of full force and effect, as if fully executed.

11.03 *Work Change Directives*

A. A Work Change Directive will not change the Contract Price or the Contract Times but is evidence that the parties expect that the modification ordered or documented by a Work Change Directive will be incorporated in a subsequently issued Change Order, following negotiations by the parties as to the Work Change Directive's effect, if any, on the Contract Price and Contract Times; or, if negotiations are unsuccessful, by a determination under the terms of the Contract Documents governing adjustments, expressly including Paragraph 11.07 regarding change of Contract Price.

EJCDC® C-700, Standard General Conditions of the Construction Contract.
Copyright© 2018 National Society of Professional Engineers, American Council of Engineering Companies, and American Society of Civil Engineers. All rights reserved.

B. If Owner has issued a Work Change Directive and:

1. Contractor believes that an adjustment in Contract Times or Contract Price is necessary, then Contractor shall submit any Change Proposal seeking such an adjustment no later than 30 days after the completion of the Work set out in the Work Change Directive.

2. Owner believes that an adjustment in Contract Times or Contract Price is necessary, then Owner shall submit any Claim seeking such an adjustment no later than 60 days after issuance of the Work Change Directive.

11.04 *Field Orders*

A. Engineer may authorize minor changes in the Work if the changes do not involve an adjustment in the Contract Price or the Contract Times and are compatible with the design concept of the completed Project as a functioning whole as indicated by the Contract Documents. Such changes will be accomplished by a Field Order and will be binding on Owner and also on Contractor, which shall perform the Work involved promptly.

B. If Contractor believes that a Field Order justifies an adjustment in the Contract Price or Contract Times, then before proceeding with the Work at issue, Contractor shall submit a Change Proposal as provided herein.

11.05 *Owner-Authorized Changes in the Work*

A. Without invalidating the Contract and without notice to any surety, Owner may, at any time or from time to time, order additions, deletions, or revisions in the Work. Changes involving the design (as set forth in the Drawings, Specifications, or otherwise) or other engineering or technical matters will be supported by Engineer's recommendation.

B. Such changes in the Work may be accomplished by a Change Order, if Owner and Contractor have agreed as to the effect, if any, of the changes on Contract Times or Contract Price; or by a Work Change Directive. Upon receipt of any such document, Contractor shall promptly proceed with the Work involved; or, in the case of a deletion in the Work, promptly cease construction activities with respect to such deleted Work. Added or revised Work must be performed under the applicable conditions of the Contract Documents.

C. Nothing in this Paragraph 11.05 obligates Contractor to undertake work that Contractor reasonably concludes cannot be performed in a manner consistent with Contractor's safety obligations under the Contract Documents or Laws and Regulations.

11.06 *Unauthorized Changes in the Work*

A. Contractor shall not be entitled to an increase in the Contract Price or an extension of the Contract Times with respect to any work performed that is not required by the Contract Documents, as amended, modified, or supplemented, except in the case of an emergency as provided in Paragraph 7.15 or in the case of uncovering Work as provided in Paragraph 14.05.C.2.

11.07 *Change of Contract Price*

A. The Contract Price may only be changed by a Change Order. Any Change Proposal for an adjustment in the Contract Price must comply with the provisions of Paragraph 11.09. Any Claim for an adjustment of Contract Price must comply with the provisions of Article 12.

B. An adjustment in the Contract Price will be determined as follows:

EJCDC® C-700, Standard General Conditions of the Construction Contract.
Copyright© 2018 National Society of Professional Engineers, American Council of Engineering Companies, and American Society of Civil Engineers. All rights reserved.

1. Where the Work involved is covered by unit prices contained in the Contract Documents, then by application of such unit prices to the quantities of the items involved (subject to the provisions of Paragraph 13.03);
2. Where the Work involved is not covered by unit prices contained in the Contract Documents, then by a mutually agreed lump sum (which may include an allowance for overhead and profit not necessarily in accordance with Paragraph 11.07.C.2); or
3. Where the Work involved is not covered by unit prices contained in the Contract Documents and the parties do not reach mutual agreement to a lump sum, then on the basis of the Cost of the Work (determined as provided in Paragraph 13.01) plus a Contractor's fee for overhead and profit (determined as provided in Paragraph 11.07.C).

C. *Contractor's Fee*: When applicable, the Contractor's fee for overhead and profit will be determined as follows:

1. A mutually acceptable fixed fee; or
2. If a fixed fee is not agreed upon, then a fee based on the following percentages of the various portions of the Cost of the Work:
    a. For costs incurred under Paragraphs 13.01.B.1 and 13.01.B.2, the Contractor's fee will be 15 percent;
    b. For costs incurred under Paragraph 13.01.B.3, the Contractor's fee will be 5 percent;
    c. Where one or more tiers of subcontracts are on the basis of Cost of the Work plus a fee and no fixed fee is agreed upon, the intent of Paragraphs 11.07.C.2.a and 11.07.C.2.b is that the Contractor's fee will be based on: (1) a fee of 15 percent of the costs incurred under Paragraphs 13.01.B.1 and 13.01.B.2 by the Subcontractor that actually performs the Work, at whatever tier, and (2) with respect to Contractor itself and to any Subcontractors of a tier higher than that of the Subcontractor that actually performs the Work, a fee of 5 percent of the amount (fee plus underlying costs incurred) attributable to the next lower tier Subcontractor; provided, however, that for any such subcontracted Work the maximum total fee to be paid by Owner will be no greater than 27 percent of the costs incurred by the Subcontractor that actually performs the Work;
    d. No fee will be payable on the basis of costs itemized under Paragraphs 13.01.B.4, 13.01.B.5, and 13.01.C;
    e. The amount of credit to be allowed by Contractor to Owner for any change which results in a net decrease in Cost of the Work will be the amount of the actual net decrease in Cost of the Work and a deduction of an additional amount equal to 5 percent of such actual net decrease in Cost of the Work; and
    f. When both additions and credits are involved in any one change or Change Proposal, the adjustment in Contractor's fee will be computed by determining the sum of the costs in each of the cost categories in Paragraph 13.01.B (specifically, payroll costs, Paragraph 13.01.B.1; incorporated materials and equipment costs, Paragraph 13.01.B.2; Subcontract costs, Paragraph 13.01.B.3; special consultants costs, Paragraph 13.01.B.4; and other costs, Paragraph 13.01.B.5) and applying to each such cost category sum the appropriate fee from Paragraphs 11.07.C.2.a through 11.07.C.2.e, inclusive.

Copyright© 2018 National Society of Professional Engineers, American Council of Engineering Companies, and American Society of Civil Engineers. All rights reserved.

11.08 *Change of Contract Times*

A. The Contract Times may only be changed by a Change Order. Any Change Proposal for an adjustment in the Contract Times must comply with the provisions of Paragraph 11.09. Any Claim for an adjustment in the Contract Times must comply with the provisions of Article 12.

B. Delay, disruption, and interference in the Work, and any related changes in Contract Times, are addressed in and governed by Paragraph 4.05.

11.09 *Change Proposals*

A. *Purpose and Content*: Contractor shall submit a Change Proposal to Engineer to request an adjustment in the Contract Times or Contract Price; contest an initial decision by Engineer concerning the requirements of the Contract Documents or relating to the acceptability of the Work under the Contract Documents; challenge a set-off against payment due; or seek other relief under the Contract. The Change Proposal will specify any proposed change in Contract Times or Contract Price, or other proposed relief, and explain the reason for the proposed change, with citations to any governing or applicable provisions of the Contract Documents. Each Change Proposal will address only one issue, or a set of closely related issues.

B. *Change Proposal Procedures*

1. *Submittal*: Contractor shall submit each Change Proposal to Engineer within 30 days after the start of the event giving rise thereto, or after such initial decision.

2. *Supporting Data*: The Contractor shall submit supporting data, including the proposed change in Contract Price or Contract Time (if any), to the Engineer and Owner within 15 days after the submittal of the Change Proposal.

    a. Change Proposals based on or related to delay, interruption, or interference must comply with the provisions of Paragraphs 4.05.D and 4.05.E.

    b. Change proposals related to a change of Contract Price must include full and detailed accounts of materials incorporated into the Work and labor and equipment used for the subject Work.

    The supporting data must be accompanied by a written statement that the supporting data are accurate and complete, and that any requested time or price adjustment is the entire adjustment to which Contractor believes it is entitled as a result of said event.

3. *Engineer's Initial Review*: Engineer will advise Owner regarding the Change Proposal, and consider any comments or response from Owner regarding the Change Proposal. If in its discretion Engineer concludes that additional supporting data is needed before conducting a full review and making a decision regarding the Change Proposal, then Engineer may request that Contractor submit such additional supporting data by a date specified by Engineer, prior to Engineer beginning its full review of the Change Proposal.

4. *Engineer's Full Review and Action on the Change Proposal*: Upon receipt of Contractor's supporting data (including any additional data requested by Engineer), Engineer will conduct a full review of each Change Proposal and, within 30 days after such receipt of the Contractor's supporting data, either approve the Change Proposal in whole, deny it in whole, or approve it in part and deny it in part. Such actions must be in writing, with a copy provided to Owner and Contractor. If Engineer does not take action on the Change

Copyright© 2018 National Society of Professional Engineers, American Council of Engineering Companies, and American Society of Civil Engineers. All rights reserved.

Proposal within 30 days, then either Owner or Contractor may at any time thereafter submit a letter to the other party indicating that as a result of Engineer's inaction the Change Proposal is deemed denied, thereby commencing the time for appeal of the denial under Article 12.

5. *Binding Decision*: Engineer's decision is final and binding upon Owner and Contractor, unless Owner or Contractor appeals the decision by filing a Claim under Article 12.

C. *Resolution of Certain Change Proposals*: If the Change Proposal does not involve the design (as set forth in the Drawings, Specifications, or otherwise), the acceptability of the Work, or other engineering or technical matters, then Engineer will notify the parties in writing that the Engineer is unable to resolve the Change Proposal. For purposes of further resolution of such a Change Proposal, such notice will be deemed a denial, and Contractor may choose to seek resolution under the terms of Article 12.

D. *Post-Completion*: Contractor shall not submit any Change Proposals after Engineer issues a written recommendation of final payment pursuant to Paragraph 15.06.B.

11.10 *Notification to Surety*

A. If the provisions of any bond require notice to be given to a surety of any change affecting the general scope of the Work or the provisions of the Contract Documents (including, but not limited to, Contract Price or Contract Times), the giving of any such notice will be Contractor's responsibility. The amount of each applicable bond will be adjusted to reflect the effect of any such change.

ARTICLE 12—CLAIMS

12.01 *Claims*

A. *Claims Process*: The following disputes between Owner and Contractor are subject to the Claims process set forth in this article:

1. Appeals by Owner or Contractor of Engineer's decisions regarding Change Proposals;

2. Owner demands for adjustments in the Contract Price or Contract Times, or other relief under the Contract Documents;

3. Disputes that Engineer has been unable to address because they do not involve the design (as set forth in the Drawings, Specifications, or otherwise), the acceptability of the Work, or other engineering or technical matters; and

4. Subject to the waiver provisions of Paragraph 15.07, any dispute arising after Engineer has issued a written recommendation of final payment pursuant to Paragraph 15.06.B.

B. *Submittal of Claim*: The party submitting a Claim shall deliver it directly to the other party to the Contract promptly (but in no event later than 30 days) after the start of the event giving rise thereto; in the case of appeals regarding Change Proposals within 30 days of the decision under appeal. The party submitting the Claim shall also furnish a copy to the Engineer, for its information only. The responsibility to substantiate a Claim rests with the party making the Claim. In the case of a Claim by Contractor seeking an increase in the Contract Times or Contract Price, Contractor shall certify that the Claim is made in good faith, that the supporting data are accurate and complete, and that to the best of Contractor's knowledge

Copyright© 2018 National Society of Professional Engineers, American Council of Engineering Companies, and American Society of Civil Engineers. All rights reserved.

and belief the amount of time or money requested accurately reflects the full amount to which Contractor is entitled.

C. *Review and Resolution*: The party receiving a Claim shall review it thoroughly, giving full consideration to its merits. The two parties shall seek to resolve the Claim through the exchange of information and direct negotiations. The parties may extend the time for resolving the Claim by mutual agreement. All actions taken on a Claim will be stated in writing and submitted to the other party, with a copy to Engineer.

D. *Mediation*

1. At any time after initiation of a Claim, Owner and Contractor may mutually agree to mediation of the underlying dispute. The agreement to mediate will stay the Claim submittal and response process.

2. If Owner and Contractor agree to mediation, then after 60 days from such agreement, either Owner or Contractor may unilaterally terminate the mediation process, and the Claim submittal and decision process will resume as of the date of the termination. If the mediation proceeds but is unsuccessful in resolving the dispute, the Claim submittal and decision process will resume as of the date of the conclusion of the mediation, as determined by the mediator.

3. Owner and Contractor shall each pay one-half of the mediator's fees and costs.

E. *Partial Approval*: If the party receiving a Claim approves the Claim in part and denies it in part, such action will be final and binding unless within 30 days of such action the other party invokes the procedure set forth in Article 17 for final resolution of disputes.

F. *Denial of Claim*: If efforts to resolve a Claim are not successful, the party receiving the Claim may deny it by giving written notice of denial to the other party. If the receiving party does not take action on the Claim within 90 days, then either Owner or Contractor may at any time thereafter submit a letter to the other party indicating that as a result of the inaction, the Claim is deemed denied, thereby commencing the time for appeal of the denial. A denial of the Claim will be final and binding unless within 30 days of the denial the other party invokes the procedure set forth in Article 17 for the final resolution of disputes.

G. *Final and Binding Results*: If the parties reach a mutual agreement regarding a Claim, whether through approval of the Claim, direct negotiations, mediation, or otherwise; or if a Claim is approved in part and denied in part, or denied in full, and such actions become final and binding; then the results of the agreement or action on the Claim will be incorporated in a Change Order or other written document to the extent they affect the Contract, including the Work, the Contract Times, or the Contract Price.

ARTICLE 13—COST OF THE WORK; ALLOWANCES; UNIT PRICE WORK

13.01 *Cost of the Work*

A. *Purposes for Determination of Cost of the Work*: The term Cost of the Work means the sum of all costs necessary for the proper performance of the Work at issue, as further defined below. The provisions of this Paragraph 13.01 are used for two distinct purposes:

1. To determine Cost of the Work when Cost of the Work is a component of the Contract Price, under cost-plus-fee, time-and-materials, or other cost-based terms; or

Copyright© 2018 National Society of Professional Engineers, American Council of Engineering Companies, and American Society of Civil Engineers. All rights reserved.

2. When needed to determine the value of a Change Order, Change Proposal, Claim, set-off, or other adjustment in Contract Price. When the value of any such adjustment is determined on the basis of Cost of the Work, Contractor is entitled only to those additional or incremental costs required because of the change in the Work or because of the event giving rise to the adjustment.

B. *Costs Included*: Except as otherwise may be agreed to in writing by Owner, costs included in the Cost of the Work will be in amounts no higher than those commonly incurred in the locality of the Project, will not include any of the costs itemized in Paragraph 13.01.C, and will include only the following items:

1. Payroll costs for employees in the direct employ of Contractor in the performance of the Work under schedules of job classifications agreed upon by Owner and Contractor in advance of the subject Work. Such employees include, without limitation, superintendents, foremen, safety managers, safety representatives, and other personnel employed full time on the Work. Payroll costs for employees not employed full time on the Work will be apportioned on the basis of their time spent on the Work. Payroll costs include, but are not limited to, salaries and wages plus the cost of fringe benefits, which include social security contributions, unemployment, excise, and payroll taxes, workers' compensation, health and retirement benefits, sick leave, and vacation and holiday pay applicable thereto. The expenses of performing Work outside of regular working hours, on Saturday, Sunday, or legal holidays, will be included in the above to the extent authorized by Owner.

2. Cost of all materials and equipment furnished and incorporated in the Work, including costs of transportation and storage thereof, and Suppliers' field services required in connection therewith. All cash discounts accrue to Contractor unless Owner deposits funds with Contractor with which to make payments, in which case the cash discounts will accrue to Owner. All trade discounts, rebates, and refunds and returns from sale of surplus materials and equipment will accrue to Owner, and Contractor shall make provisions so that they may be obtained.

3. Payments made by Contractor to Subcontractors for Work performed by Subcontractors. If required by Owner, Contractor shall obtain competitive bids from subcontractors acceptable to Owner and Contractor and shall deliver such bids to Owner, which will then determine, with the advice of Engineer, which bids, if any, will be acceptable. If any subcontract provides that the Subcontractor is to be paid on the basis of Cost of the Work plus a fee, the Subcontractor's Cost of the Work and fee will be determined in the same manner as Contractor's Cost of the Work and fee as provided in this Paragraph 13.01.

4. Costs of special consultants (including but not limited to engineers, architects, testing laboratories, surveyors, attorneys, and accountants) employed or retained for services specifically related to the Work.

5. Other costs consisting of the following:

a. The proportion of necessary transportation, travel, and subsistence expenses of Contractor's employees incurred in discharge of duties connected with the Work.

b. Cost, including transportation and maintenance, of all materials, supplies, equipment, machinery, appliances, office, and temporary facilities at the Site, which are

Copyright© 2018 National Society of Professional Engineers, American Council of Engineering Companies, and American Society of Civil Engineers. All rights reserved.

consumed in the performance of the Work, and cost, less market value, of such items used but not consumed which remain the property of Contractor.

1) In establishing included costs for materials such as scaffolding, plating, or sheeting, consideration will be given to the actual or the estimated life of the material for use on other projects; or rental rates may be established on the basis of purchase or salvage value of such items, whichever is less. Contractor will not be eligible for compensation for such items in an amount that exceeds the purchase cost of such item.

c. *Construction Equipment Rental*

1) Rentals of all construction equipment and machinery, and the parts thereof, in accordance with rental agreements approved by Owner as to price (including any surcharge or special rates applicable to overtime use of the construction equipment or machinery), and the costs of transportation, loading, unloading, assembly, dismantling, and removal thereof. All such costs will be in accordance with the terms of said rental agreements. The rental of any such equipment, machinery, or parts must cease when the use thereof is no longer necessary for the Work.

2) Costs for equipment and machinery owned by Contractor or a Contractor-related entity will be paid at a rate shown for such equipment in the equipment rental rate book specified in the Supplementary Conditions. An hourly rate will be computed by dividing the monthly rates by 176. These computed rates will include all operating costs.

3) With respect to Work that is the result of a Change Order, Change Proposal, Claim, set-off, or other adjustment in Contract Price ("changed Work"), included costs will be based on the time the equipment or machinery is in use on the changed Work and the costs of transportation, loading, unloading, assembly, dismantling, and removal when directly attributable to the changed Work. The cost of any such equipment or machinery, or parts thereof, must cease to accrue when the use thereof is no longer necessary for the changed Work.

d. Sales, consumer, use, and other similar taxes related to the Work, and for which Contractor is liable, as imposed by Laws and Regulations.

e. Deposits lost for causes other than negligence of Contractor, any Subcontractor, or anyone directly or indirectly employed by any of them or for whose acts any of them may be liable, and royalty payments and fees for permits and licenses.

f. Losses and damages (and related expenses) caused by damage to the Work, not compensated by insurance or otherwise, sustained by Contractor in connection with the performance of the Work (except losses and damages within the deductible amounts of builder's risk or other property insurance established in accordance with Paragraph 6.04), provided such losses and damages have resulted from causes other than the negligence of Contractor, any Subcontractor, or anyone directly or indirectly employed by any of them or for whose acts any of them may be liable. Such losses include settlements made with the written consent and approval of Owner. No such losses, damages, and expenses will be included in the Cost of the Work for the purpose of determining Contractor's fee.

Copyright© 2018 National Society of Professional Engineers, American Council of Engineering Companies, and American Society of Civil Engineers. All rights reserved.

g. The cost of utilities, fuel, and sanitary facilities at the Site.

h. Minor expenses such as communication service at the Site, express and courier services, and similar petty cash items in connection with the Work.

i. The costs of premiums for all bonds and insurance that Contractor is required by the Contract Documents to purchase and maintain.

C. *Costs Excluded*: The term Cost of the Work does not include any of the following items:

1. Payroll costs and other compensation of Contractor's officers, executives, principals, general managers, engineers, architects, estimators, attorneys, auditors, accountants, purchasing and contracting agents, expediters, timekeepers, clerks, and other personnel employed by Contractor, whether at the Site or in Contractor's principal or branch office for general administration of the Work and not specifically included in the agreed upon schedule of job classifications referred to in Paragraph 13.01.B.1 or specifically covered by Paragraph 13.01.B.4. The payroll costs and other compensation excluded here are to be considered administrative costs covered by the Contractor's fee.

2. The cost of purchasing, renting, or furnishing small tools and hand tools.

3. Expenses of Contractor's principal and branch offices other than Contractor's office at the Site.

4. Any part of Contractor's capital expenses, including interest on Contractor's capital employed for the Work and charges against Contractor for delinquent payments.

5. Costs due to the negligence of Contractor, any Subcontractor, or anyone directly or indirectly employed by any of them or for whose acts any of them may be liable, including but not limited to, the correction of defective Work, disposal of materials or equipment wrongly supplied, and making good any damage to property.

6. Expenses incurred in preparing and advancing Claims.

7. Other overhead or general expense costs of any kind and the costs of any item not specifically and expressly included in Paragraph 13.01.B.

D. *Contractor's Fee*

1. When the Work as a whole is performed on the basis of cost-plus-a-fee, then:

a. Contractor's fee for the Work set forth in the Contract Documents as of the Effective Date of the Contract will be determined as set forth in the Agreement.

b. for any Work covered by a Change Order, Change Proposal, Claim, set-off, or other adjustment in Contract Price on the basis of Cost of the Work, Contractor's fee will be determined as follows:

1) When the fee for the Work as a whole is a percentage of the Cost of the Work, the fee will automatically adjust as the Cost of the Work changes.

2) When the fee for the Work as a whole is a fixed fee, the fee for any additions or deletions will be determined in accordance with Paragraph 11.07.C.2.

2. When the Work as a whole is performed on the basis of a stipulated sum, or any other basis other than cost-plus-a-fee, then Contractor's fee for any Work covered by a Change

Copyright© 2018 National Society of Professional Engineers, American Council of Engineering Companies, and American Society of Civil Engineers. All rights reserved.

Order, Change Proposal, Claim, set-off, or other adjustment in Contract Price on the basis of Cost of the Work will be determined in accordance with Paragraph 11.07.C.2.

E. *Documentation and Audit*: Whenever the Cost of the Work for any purpose is to be determined pursuant to this Article 13, Contractor and pertinent Subcontractors will establish and maintain records of the costs in accordance with generally accepted accounting practices. Subject to prior written notice, Owner will be afforded reasonable access, during normal business hours, to all Contractor's accounts, records, books, correspondence, instructions, drawings, receipts, vouchers, memoranda, and similar data relating to the Cost of the Work and Contractor's fee. Contractor shall preserve all such documents for a period of three years after the final payment by Owner. Pertinent Subcontractors will afford such access to Owner, and preserve such documents, to the same extent required of Contractor.

13.02 *Allowances*

A. It is understood that Contractor has included in the Contract Price all allowances so named in the Contract Documents and shall cause the Work so covered to be performed for such sums and by such persons or entities as may be acceptable to Owner and Engineer.

B. *Cash Allowances*: Contractor agrees that:

1. the cash allowances include the cost to Contractor (less any applicable trade discounts) of materials and equipment required by the allowances to be delivered at the Site, and all applicable taxes; and

2. Contractor's costs for unloading and handling on the Site, labor, installation, overhead, profit, and other expenses contemplated for the cash allowances have been included in the Contract Price and not in the allowances, and no demand for additional payment for any of the foregoing will be valid.

C. *Owner's Contingency Allowance*: Contractor agrees that an Owner's contingency allowance, if any, is for the sole use of Owner to cover unanticipated costs.

D. Prior to final payment, an appropriate Change Order will be issued as recommended by Engineer to reflect actual amounts due Contractor for Work covered by allowances, and the Contract Price will be correspondingly adjusted.

13.03 *Unit Price Work*

A. Where the Contract Documents provide that all or part of the Work is to be Unit Price Work, initially the Contract Price will be deemed to include for all Unit Price Work an amount equal to the sum of the unit price for each separately identified item of Unit Price Work times the estimated quantity of each item as indicated in the Agreement.

B. The estimated quantities of items of Unit Price Work are not guaranteed and are solely for the purpose of comparison of Bids and determining an initial Contract Price. Payments to Contractor for Unit Price Work will be based on actual quantities.

C. Each unit price will be deemed to include an amount considered by Contractor to be adequate to cover Contractor's overhead and profit for each separately identified item.

D. Engineer will determine the actual quantities and classifications of Unit Price Work performed by Contractor. Engineer will review with Contractor the Engineer's preliminary determinations on such matters before rendering a written decision thereon (by recommendation of an Application for Payment or otherwise). Engineer's written decision

Copyright© 2018 National Society of Professional Engineers, American Council of Engineering Companies, and American Society of Civil Engineers. All rights reserved.

thereon will be final and binding (except as modified by Engineer to reflect changed factual conditions or more accurate data) upon Owner and Contractor, and the final adjustment of Contract Price will be set forth in a Change Order, subject to the provisions of the following paragraph.

E. *Adjustments in Unit Price*

1. Contractor or Owner shall be entitled to an adjustment in the unit price with respect to an item of Unit Price Work if:

a. the quantity of the item of Unit Price Work performed by Contractor differs materially and significantly from the estimated quantity of such item indicated in the Agreement; and

b. Contractor's unit costs to perform the item of Unit Price Work have changed materially and significantly as a result of the quantity change.

2. The adjustment in unit price will account for and be coordinated with any related changes in quantities of other items of Work, and in Contractor's costs to perform such other Work, such that the resulting overall change in Contract Price is equitable to Owner and Contractor.

3. Adjusted unit prices will apply to all units of that item.

ARTICLE 14—TESTS AND INSPECTIONS; CORRECTION, REMOVAL, OR ACCEPTANCE OF DEFECTIVE WORK

14.01 *Access to Work*

A. Owner, Engineer, their consultants and other representatives and personnel of Owner, independent testing laboratories, and authorities having jurisdiction have access to the Site and the Work at reasonable times for their observation, inspection, and testing. Contractor shall provide them proper and safe conditions for such access and advise them of Contractor's safety procedures and programs so that they may comply with such procedures and programs as applicable.

14.02 *Tests, Inspections, and Approvals*

A. Contractor shall give Engineer timely notice of readiness of the Work (or specific parts thereof) for all required inspections and tests, and shall cooperate with inspection and testing personnel to facilitate required inspections and tests.

B. Owner shall retain and pay for the services of an independent inspector, testing laboratory, or other qualified individual or entity to perform all inspections and tests expressly required by the Contract Documents to be furnished and paid for by Owner, except that costs incurred in connection with tests or inspections of covered Work will be governed by the provisions of Paragraph 14.05.

C. If Laws or Regulations of any public body having jurisdiction require any Work (or part thereof) specifically to be inspected, tested, or approved by an employee or other representative of such public body, Contractor shall assume full responsibility for arranging and obtaining such inspections, tests, or approvals, pay all costs in connection therewith, and furnish Engineer the required certificates of inspection or approval.

Copyright© 2018 National Society of Professional Engineers, American Council of Engineering Companies, and American Society of Civil Engineers. All rights reserved.

D. Contractor shall be responsible for arranging, obtaining, and paying for all inspections and tests required:

1. by the Contract Documents, unless the Contract Documents expressly allocate responsibility for a specific inspection or test to Owner;
2. to attain Owner's and Engineer's acceptance of materials or equipment to be incorporated in the Work;
3. by manufacturers of equipment furnished under the Contract Documents;
4. for testing, adjusting, and balancing of mechanical, electrical, and other equipment to be incorporated into the Work; and
5. for acceptance of materials, mix designs, or equipment submitted for approval prior to Contractor's purchase thereof for incorporation in the Work.

Such inspections and tests will be performed by independent inspectors, testing laboratories, or other qualified individuals or entities acceptable to Owner and Engineer.

E. If the Contract Documents require the Work (or part thereof) to be approved by Owner, Engineer, or another designated individual or entity, then Contractor shall assume full responsibility for arranging and obtaining such approvals.

F. If any Work (or the work of others) that is to be inspected, tested, or approved is covered by Contractor without written concurrence of Engineer, Contractor shall, if requested by Engineer, uncover such Work for observation. Such uncovering will be at Contractor's expense unless Contractor had given Engineer timely notice of Contractor's intention to cover the same and Engineer had not acted with reasonable promptness in response to such notice.

14.03 *Defective Work*

A. *Contractor's Obligation*: It is Contractor's obligation to assure that the Work is not defective.

B. *Engineer's Authority*: Engineer has the authority to determine whether Work is defective, and to reject defective Work.

C. *Notice of Defects*: Prompt written notice of all defective Work of which Owner or Engineer has actual knowledge will be given to Contractor.

D. *Correction, or Removal and Replacement*: Promptly after receipt of written notice of defective Work, Contractor shall correct all such defective Work, whether or not fabricated, installed, or completed, or, if Engineer has rejected the defective Work, remove it from the Project and replace it with Work that is not defective.

E. *Preservation of Warranties*: When correcting defective Work, Contractor shall take no action that would void or otherwise impair Owner's special warranty and guarantee, if any, on said Work.

F. *Costs and Damages*: In addition to its correction, removal, and replacement obligations with respect to defective Work, Contractor shall pay all claims, costs, losses, and damages arising out of or relating to defective Work, including but not limited to the cost of the inspection, testing, correction, removal, replacement, or reconstruction of such defective Work, fines levied against Owner by governmental authorities because the Work is defective, and the costs of repair or replacement of work of others resulting from defective Work. Prior to final payment, if Owner and Contractor are unable to agree as to the measure of such claims, costs,

EJCDC® C-700, Standard General Conditions of the Construction Contract.
Copyright© 2018 National Society of Professional Engineers, American Council of Engineering Companies, and American Society of Civil Engineers. All rights reserved.

losses, and damages resulting from defective Work, then Owner may impose a reasonable set-off against payments due under Article 15.

14.04 *Acceptance of Defective Work*

A. If, instead of requiring correction or removal and replacement of defective Work, Owner prefers to accept it, Owner may do so (subject, if such acceptance occurs prior to final payment, to Engineer's confirmation that such acceptance is in general accord with the design intent and applicable engineering principles, and will not endanger public safety). Contractor shall pay all claims, costs, losses, and damages attributable to Owner's evaluation of and determination to accept such defective Work (such costs to be approved by Engineer as to reasonableness), and for the diminished value of the Work to the extent not otherwise paid by Contractor. If any such acceptance occurs prior to final payment, the necessary revisions in the Contract Documents with respect to the Work will be incorporated in a Change Order. If the parties are unable to agree as to the decrease in the Contract Price, reflecting the diminished value of Work so accepted, then Owner may impose a reasonable set-off against payments due under Article 15. If the acceptance of defective Work occurs after final payment, Contractor shall pay an appropriate amount to Owner.

14.05 *Uncovering Work*

A. Engineer has the authority to require additional inspection or testing of the Work, whether or not the Work is fabricated, installed, or completed.

B. If any Work is covered contrary to the written request of Engineer, then Contractor shall, if requested by Engineer, uncover such Work for Engineer's observation, and then replace the covering, all at Contractor's expense.

C. If Engineer considers it necessary or advisable that covered Work be observed by Engineer or inspected or tested by others, then Contractor, at Engineer's request, shall uncover, expose, or otherwise make available for observation, inspection, or testing as Engineer may require, that portion of the Work in question, and provide all necessary labor, material, and equipment.

1. If it is found that the uncovered Work is defective, Contractor shall be responsible for all claims, costs, losses, and damages arising out of or relating to such uncovering, exposure, observation, inspection, and testing, and of satisfactory replacement or reconstruction (including but not limited to all costs of repair or replacement of work of others); and pending Contractor's full discharge of this responsibility the Owner shall be entitled to impose a reasonable set-off against payments due under Article 15.

2. If the uncovered Work is not found to be defective, Contractor shall be allowed an increase in the Contract Price or an extension of the Contract Times, directly attributable to such uncovering, exposure, observation, inspection, testing, replacement, and reconstruction. If the parties are unable to agree as to the amount or extent thereof, then Contractor may submit a Change Proposal within 30 days of the determination that the Work is not defective.

14.06 *Owner May Stop the Work*

A. If the Work is defective, or Contractor fails to supply sufficient skilled workers or suitable materials or equipment, or fails to perform the Work in such a way that the completed Work will conform to the Contract Documents, then Owner may order Contractor to stop the Work,

Copyright© 2018 National Society of Professional Engineers, American Council of Engineering Companies, and American Society of Civil Engineers. All rights reserved.

or any portion thereof, until the cause for such order has been eliminated; however, this right of Owner to stop the Work will not give rise to any duty on the part of Owner to exercise this right for the benefit of Contractor, any Subcontractor, any Supplier, any other individual or entity, or any surety for, or employee or agent of any of them.

14.07 *Owner May Correct Defective Work*

A. If Contractor fails within a reasonable time after written notice from Engineer to correct defective Work, or to remove and replace defective Work as required by Engineer, then Owner may, after 7 days' written notice to Contractor, correct or remedy any such deficiency.

B. In exercising the rights and remedies under this Paragraph 14.07, Owner shall proceed expeditiously. In connection with such corrective or remedial action, Owner may exclude Contractor from all or part of the Site, take possession of all or part of the Work and suspend Contractor's services related thereto, and incorporate in the Work all materials and equipment stored at the Site or for which Owner has paid Contractor but which are stored elsewhere. Contractor shall allow Owner, Owner's representatives, agents and employees, Owner's other contractors, and Engineer and Engineer's consultants access to the Site to enable Owner to exercise the rights and remedies under this paragraph.

C. All claims, costs, losses, and damages incurred or sustained by Owner in exercising the rights and remedies under this Paragraph 14.07 will be charged against Contractor as set-offs against payments due under Article 15. Such claims, costs, losses and damages will include but not be limited to all costs of repair, or replacement of work of others destroyed or damaged by correction, removal, or replacement of Contractor's defective Work.

D. Contractor shall not be allowed an extension of the Contract Times because of any delay in the performance of the Work attributable to the exercise by Owner of Owner's rights and remedies under this Paragraph 14.07.

ARTICLE 15—PAYMENTS TO CONTRACTOR; SET-OFFS; COMPLETION; CORRECTION PERIOD

15.01 *Progress Payments*

A. *Basis for Progress Payments*: The Schedule of Values established as provided in Article 2 will serve as the basis for progress payments and will be incorporated into a form of Application for Payment acceptable to Engineer. Progress payments for Unit Price Work will be based on the number of units completed during the pay period, as determined under the provisions of Paragraph 13.03. Progress payments for cost-based Work will be based on Cost of the Work completed by Contractor during the pay period.

B. *Applications for Payments*

1. At least 20 days before the date established in the Agreement for each progress payment (but not more often than once a month), Contractor shall submit to Engineer for review an Application for Payment filled out and signed by Contractor covering the Work completed as of the date of the Application and accompanied by such supporting documentation as is required by the Contract Documents.

2. If payment is requested on the basis of materials and equipment not incorporated in the Work but delivered and suitably stored at the Site or at another location agreed to in writing, the Application for Payment must also be accompanied by: (a) a bill of sale, invoice, copies of subcontract or purchase order payments, or other documentation

Copyright© 2018 National Society of Professional Engineers, American Council of Engineering Companies, and American Society of Civil Engineers. All rights reserved.

establishing full payment by Contractor for the materials and equipment; (b) at Owner's request, documentation warranting that Owner has received the materials and equipment free and clear of all Liens; and (c) evidence that the materials and equipment are covered by appropriate property insurance, a warehouse bond, or other arrangements to protect Owner's interest therein, all of which must be satisfactory to Owner.

3. Beginning with the second Application for Payment, each Application must include an affidavit of Contractor stating that all previous progress payments received by Contractor have been applied to discharge Contractor's legitimate obligations associated with prior Applications for Payment.

4. The amount of retainage with respect to progress payments will be as stipulated in the Agreement.

C. *Review of Applications*

1. Engineer will, within 10 days after receipt of each Application for Payment, including each resubmittal, either indicate in writing a recommendation of payment and present the Application to Owner, or return the Application to Contractor indicating in writing Engineer's reasons for refusing to recommend payment. In the latter case, Contractor may make the necessary corrections and resubmit the Application.

2. Engineer's recommendation of any payment requested in an Application for Payment will constitute a representation by Engineer to Owner, based on Engineer's observations of the executed Work as an experienced and qualified design professional, and on Engineer's review of the Application for Payment and the accompanying data and schedules, that to the best of Engineer's knowledge, information and belief:

   a. the Work has progressed to the point indicated;

   b. the quality of the Work is generally in accordance with the Contract Documents (subject to an evaluation of the Work as a functioning whole prior to or upon Substantial Completion, the results of any subsequent tests called for in the Contract Documents, a final determination of quantities and classifications for Unit Price Work under Paragraph 13.03, and any other qualifications stated in the recommendation); and

   c. the conditions precedent to Contractor's being entitled to such payment appear to have been fulfilled in so far as it is Engineer's responsibility to observe the Work.

3. By recommending any such payment Engineer will not thereby be deemed to have represented that:

   a. inspections made to check the quality or the quantity of the Work as it has been performed have been exhaustive, extended to every aspect of the Work in progress, or involved detailed inspections of the Work beyond the responsibilities specifically assigned to Engineer in the Contract; or

   b. there may not be other matters or issues between the parties that might entitle Contractor to be paid additionally by Owner or entitle Owner to withhold payment to Contractor.

Copyright© 2018 National Society of Professional Engineers, American Council of Engineering Companies, and American Society of Civil Engineers. All rights reserved.

4. Neither Engineer's review of Contractor's Work for the purposes of recommending payments nor Engineer's recommendation of any payment, including final payment, will impose responsibility on Engineer:
    a. to supervise, direct, or control the Work;
    b. for the means, methods, techniques, sequences, or procedures of construction, or the safety precautions and programs incident thereto;
    c. for Contractor's failure to comply with Laws and Regulations applicable to Contractor's performance of the Work;
    d. to make any examination to ascertain how or for what purposes Contractor has used the money paid by Owner; or
    e. to determine that title to any of the Work, materials, or equipment has passed to Owner free and clear of any Liens.
5. Engineer may refuse to recommend the whole or any part of any payment if, in Engineer's opinion, it would be incorrect to make the representations to Owner stated in Paragraph 15.01.C.2.
6. Engineer will recommend reductions in payment (set-offs) necessary in Engineer's opinion to protect Owner from loss because:
    a. the Work is defective, requiring correction or replacement;
    b. the Contract Price has been reduced by Change Orders;
    c. Owner has been required to correct defective Work in accordance with Paragraph 14.07, or has accepted defective Work pursuant to Paragraph 14.04;
    d. Owner has been required to remove or remediate a Hazardous Environmental Condition for which Contractor is responsible; or
    e. Engineer has actual knowledge of the occurrence of any of the events that would constitute a default by Contractor and therefore justify termination for cause under the Contract Documents.

D. *Payment Becomes Due*

1. Ten days after presentation of the Application for Payment to Owner with Engineer's recommendation, the amount recommended (subject to any Owner set-offs) will become due, and when due will be paid by Owner to Contractor.

E. *Reductions in Payment by Owner*

1. In addition to any reductions in payment (set-offs) recommended by Engineer, Owner is entitled to impose a set-off against payment based on any of the following:
    a. Claims have been made against Owner based on Contractor's conduct in the performance or furnishing of the Work, or Owner has incurred costs, losses, or damages resulting from Contractor's conduct in the performance or furnishing of the Work, including but not limited to claims, costs, losses, or damages from workplace injuries, adjacent property damage, non-compliance with Laws and Regulations, and patent infringement;

Copyright© 2018 National Society of Professional Engineers, American Council of Engineering Companies, and American Society of Civil Engineers. All rights reserved.

b. Contractor has failed to take reasonable and customary measures to avoid damage, delay, disruption, and interference with other work at or adjacent to the Site;

c. Contractor has failed to provide and maintain required bonds or insurance;

d. Owner has been required to remove or remediate a Hazardous Environmental Condition for which Contractor is responsible;

e. Owner has incurred extra charges or engineering costs related to submittal reviews, evaluations of proposed substitutes, tests and inspections, or return visits to manufacturing or assembly facilities;

f. The Work is defective, requiring correction or replacement;

g. Owner has been required to correct defective Work in accordance with Paragraph 14.07, or has accepted defective Work pursuant to Paragraph 14.04;

h. The Contract Price has been reduced by Change Orders;

i. An event has occurred that would constitute a default by Contractor and therefore justify a termination for cause;

j. Liquidated or other damages have accrued as a result of Contractor's failure to achieve Milestones, Substantial Completion, or final completion of the Work;

k. Liens have been filed in connection with the Work, except where Contractor has delivered a specific bond satisfactory to Owner to secure the satisfaction and discharge of such Liens; or

l. Other items entitle Owner to a set-off against the amount recommended.

2. If Owner imposes any set-off against payment, whether based on its own knowledge or on the written recommendations of Engineer, Owner will give Contractor immediate written notice (with a copy to Engineer) stating the reasons for such action and the specific amount of the reduction, and promptly pay Contractor any amount remaining after deduction of the amount so withheld. Owner shall promptly pay Contractor the amount so withheld, or any adjustment thereto agreed to by Owner and Contractor, if Contractor remedies the reasons for such action. The reduction imposed will be binding on Contractor unless it duly submits a Change Proposal contesting the reduction.

3. Upon a subsequent determination that Owner's refusal of payment was not justified, the amount wrongfully withheld will be treated as an amount due as determined by Paragraph 15.01.D.1 and subject to interest as provided in the Agreement.

15.02 *Contractor's Warranty of Title*

A. Contractor warrants and guarantees that title to all Work, materials, and equipment furnished under the Contract will pass to Owner free and clear of (1) all Liens and other title defects, and (2) all patent, licensing, copyright, or royalty obligations, no later than 7 days after the time of payment by Owner.

15.03 *Substantial Completion*

A. When Contractor considers the entire Work ready for its intended use Contractor shall notify Owner and Engineer in writing that the entire Work is substantially complete and request that Engineer issue a certificate of Substantial Completion. Contractor shall at the same time

Copyright© 2018 National Society of Professional Engineers, American Council of Engineering Companies, and American Society of Civil Engineers. All rights reserved.

submit to Owner and Engineer an initial draft of punch list items to be completed or corrected before final payment.

B. Promptly after Contractor's notification, Owner, Contractor, and Engineer shall make an inspection of the Work to determine the status of completion. If Engineer does not consider the Work substantially complete, Engineer will notify Contractor in writing giving the reasons therefor.

C. If Engineer considers the Work substantially complete, Engineer will deliver to Owner a preliminary certificate of Substantial Completion which will fix the date of Substantial Completion. Engineer shall attach to the certificate a punch list of items to be completed or corrected before final payment. Owner shall have 7 days after receipt of the preliminary certificate during which to make written objection to Engineer as to any provisions of the certificate or attached punch list. If, after considering the objections to the provisions of the preliminary certificate, Engineer concludes that the Work is not substantially complete, Engineer will, within 14 days after submission of the preliminary certificate to Owner, notify Contractor in writing that the Work is not substantially complete, stating the reasons therefor. If Owner does not object to the provisions of the certificate, or if despite consideration of Owner's objections Engineer concludes that the Work is substantially complete, then Engineer will, within said 14 days, execute and deliver to Owner and Contractor a final certificate of Substantial Completion (with a revised punch list of items to be completed or corrected) reflecting such changes from the preliminary certificate as Engineer believes justified after consideration of any objections from Owner.

D. At the time of receipt of the preliminary certificate of Substantial Completion, Owner and Contractor will confer regarding Owner's use or occupancy of the Work following Substantial Completion, review the builder's risk insurance policy with respect to the end of the builder's risk coverage, and confirm the transition to coverage of the Work under a permanent property insurance policy held by Owner. Unless Owner and Contractor agree otherwise in writing, Owner shall bear responsibility for security, operation, protection of the Work, property insurance, maintenance, heat, and utilities upon Owner's use or occupancy of the Work.

E. After Substantial Completion the Contractor shall promptly begin work on the punch list of items to be completed or corrected prior to final payment. In appropriate cases Contractor may submit monthly Applications for Payment for completed punch list items, following the progress payment procedures set forth above.

F. Owner shall have the right to exclude Contractor from the Site after the date of Substantial Completion subject to allowing Contractor reasonable access to remove its property and complete or correct items on the punch list.

15.04 *Partial Use or Occupancy*

A. Prior to Substantial Completion of all the Work, Owner may use or occupy any substantially completed part of the Work which has specifically been identified in the Contract Documents, or which Owner, Engineer, and Contractor agree constitutes a separately functioning and usable part of the Work that can be used by Owner for its intended purpose without

Copyright© 2018 National Society of Professional Engineers, American Council of Engineering Companies, and American Society of Civil Engineers. All rights reserved.

significant interference with Contractor's performance of the remainder of the Work, subject to the following conditions:

1. At any time, Owner may request in writing that Contractor permit Owner to use or occupy any such part of the Work that Owner believes to be substantially complete. If and when Contractor agrees that such part of the Work is substantially complete, Contractor, Owner, and Engineer will follow the procedures of Paragraph 15.03.A through 15.03.E for that part of the Work.
2. At any time, Contractor may notify Owner and Engineer in writing that Contractor considers any such part of the Work substantially complete and request Engineer to issue a certificate of Substantial Completion for that part of the Work.
3. Within a reasonable time after either such request, Owner, Contractor, and Engineer shall make an inspection of that part of the Work to determine its status of completion. If Engineer does not consider that part of the Work to be substantially complete, Engineer will notify Owner and Contractor in writing giving the reasons therefor. If Engineer considers that part of the Work to be substantially complete, the provisions of Paragraph 15.03 will apply with respect to certification of Substantial Completion of that part of the Work and the division of responsibility in respect thereof and access thereto.
4. No use or occupancy or separate operation of part of the Work may occur prior to compliance with the requirements of Paragraph 6.04 regarding builder's risk or other property insurance.

15.05 *Final Inspection*

A. Upon written notice from Contractor that the entire Work or an agreed portion thereof is complete, Engineer will promptly make a final inspection with Owner and Contractor and will notify Contractor in writing of all particulars in which this inspection reveals that the Work, or agreed portion thereof, is incomplete or defective. Contractor shall immediately take such measures as are necessary to complete such Work or remedy such deficiencies.

15.06 *Final Payment*

A. *Application for Payment*

1. After Contractor has, in the opinion of Engineer, satisfactorily completed all corrections identified during the final inspection and has delivered, in accordance with the Contract Documents, all maintenance and operating instructions, schedules, guarantees, bonds, certificates or other evidence of insurance, certificates of inspection, annotated record documents (as provided in Paragraph 7.12), and other documents, Contractor may make application for final payment.
2. The final Application for Payment must be accompanied (except as previously delivered) by:
    a. all documentation called for in the Contract Documents;
    b. consent of the surety, if any, to final payment;
    c. satisfactory evidence that all title issues have been resolved such that title to all Work, materials, and equipment has passed to Owner free and clear of any Liens or other title defects, or will so pass upon final payment.

Copyright© 2018 National Society of Professional Engineers, American Council of Engineering Companies, and American Society of Civil Engineers. All rights reserved.

d. a list of all duly pending Change Proposals and Claims; and

e. complete and legally effective releases or waivers (satisfactory to Owner) of all Lien rights arising out of the Work, and of Liens filed in connection with the Work.

3. In lieu of the releases or waivers of Liens specified in Paragraph 15.06.A.2 and as approved by Owner, Contractor may furnish receipts or releases in full and an affidavit of Contractor that: (a) the releases and receipts include all labor, services, material, and equipment for which a Lien could be filed; and (b) all payrolls, material and equipment bills, and other indebtedness connected with the Work for which Owner might in any way be responsible, or which might in any way result in liens or other burdens on Owner's property, have been paid or otherwise satisfied. If any Subcontractor or Supplier fails to furnish such a release or receipt in full, Contractor may furnish a bond or other collateral satisfactory to Owner to indemnify Owner against any Lien, or Owner at its option may issue joint checks payable to Contractor and specified Subcontractors and Suppliers.

B. *Engineer's Review of Final Application and Recommendation of Payment*: If, on the basis of Engineer's observation of the Work during construction and final inspection, and Engineer's review of the final Application for Payment and accompanying documentation as required by the Contract Documents, Engineer is satisfied that the Work has been completed and Contractor's other obligations under the Contract have been fulfilled, Engineer will, within 10 days after receipt of the final Application for Payment, indicate in writing Engineer's recommendation of final payment and present the final Application for Payment to Owner for payment. Such recommendation will account for any set-offs against payment that are necessary in Engineer's opinion to protect Owner from loss for the reasons stated above with respect to progress payments. Otherwise, Engineer will return the Application for Payment to Contractor, indicating in writing the reasons for refusing to recommend final payment, in which case Contractor shall make the necessary corrections and resubmit the Application for Payment.

C. *Notice of Acceptability*: In support of its recommendation of payment of the final Application for Payment, Engineer will also give written notice to Owner and Contractor that the Work is acceptable, subject to stated limitations in the notice and to the provisions of Paragraph 15.07.

D. *Completion of Work*: The Work is complete (subject to surviving obligations) when it is ready for final payment as established by the Engineer's written recommendation of final payment and issuance of notice of the acceptability of the Work.

E. *Final Payment Becomes Due*: Upon receipt from Engineer of the final Application for Payment and accompanying documentation, Owner shall set off against the amount recommended by Engineer for final payment any further sum to which Owner is entitled, including but not limited to set-offs for liquidated damages and set-offs allowed under the provisions of this Contract with respect to progress payments. Owner shall pay the resulting balance due to Contractor within 30 days of Owner's receipt of the final Application for Payment from Engineer.

15.07 *Waiver of Claims*

A. By making final payment, Owner waives its claim or right to liquidated damages or other damages for late completion by Contractor, except as set forth in an outstanding Claim,

Copyright© 2018 National Society of Professional Engineers, American Council of Engineering Companies, and American Society of Civil Engineers. All rights reserved.

appeal under the provisions of Article 17, set-off, or express reservation of rights by Owner. Owner reserves all other claims or rights after final payment.

B. The acceptance of final payment by Contractor will constitute a waiver by Contractor of all claims and rights against Owner other than those pending matters that have been duly submitted as a Claim, or appealed under the provisions of Article 17.

15.08 *Correction Period*

A. If within one year after the date of Substantial Completion (or such longer period of time as may be prescribed by the Supplementary Conditions or the terms of any applicable special guarantee required by the Contract Documents), Owner gives Contractor written notice that any Work has been found to be defective, or that Contractor's repair of any damages to the Site or adjacent areas has been found to be defective, then after receipt of such notice of defect Contractor shall promptly, without cost to Owner and in accordance with Owner's written instructions:

1. correct the defective repairs to the Site or such adjacent areas;
2. correct such defective Work;
3. remove the defective Work from the Project and replace it with Work that is not defective, if the defective Work has been rejected by Owner, and
4. satisfactorily correct or repair or remove and replace any damage to other Work, to the work of others, or to other land or areas resulting from the corrective measures.

B. Owner shall give any such notice of defect within 60 days of the discovery that such Work or repairs is defective. If such notice is given within such 60 days but after the end of the correction period, the notice will be deemed a notice of defective Work under Paragraph 7.17.B.

C. If, after receipt of a notice of defect within 60 days and within the correction period, Contractor does not promptly comply with the terms of Owner's written instructions, or in an emergency where delay would cause serious risk of loss or damage, Owner may have the defective Work corrected or repaired or may have the rejected Work removed and replaced. Contractor shall pay all costs, losses, and damages (including but not limited to all fees and charges of engineers, architects, attorneys, and other professionals and all court or arbitration or other dispute resolution costs) arising out of or relating to such correction or repair or such removal and replacement (including but not limited to all costs of repair or replacement of work of others). Contractor's failure to pay such costs, losses, and damages within 10 days of invoice from Owner will be deemed the start of an event giving rise to a Claim under Paragraph 12.01.B, such that any related Claim must be brought within 30 days of the failure to pay.

D. In special circumstances where a particular item of equipment is placed in continuous service before Substantial Completion of all the Work, the correction period for that item may start to run from an earlier date if so provided in the Specifications.

E. Where defective Work (and damage to other Work resulting therefrom) has been corrected or removed and replaced under this paragraph, the correction period hereunder with respect to such Work will be extended for an additional period of one year after such correction or removal and replacement has been satisfactorily completed.

Copyright© 2018 National Society of Professional Engineers, American Council of Engineering Companies, and American Society of Civil Engineers. All rights reserved.

F. Contractor's obligations under this paragraph are in addition to all other obligations and warranties. The provisions of this paragraph are not to be construed as a substitute for, or a waiver of, the provisions of any applicable statute of limitation or repose.

ARTICLE 16—SUSPENSION OF WORK AND TERMINATION

16.01 *Owner May Suspend Work*

A. At any time and without cause, Owner may suspend the Work or any portion thereof for a period of not more than 90 consecutive days by written notice to Contractor and Engineer. Such notice will fix the date on which Work will be resumed. Contractor shall resume the Work on the date so fixed. Contractor shall be entitled to an adjustment in the Contract Price or an extension of the Contract Times directly attributable to any such suspension. Any Change Proposal seeking such adjustments must be submitted no later than 30 days after the date fixed for resumption of Work.

16.02 *Owner May Terminate for Cause*

A. The occurrence of any one or more of the following events will constitute a default by Contractor and justify termination for cause:

1. Contractor's persistent failure to perform the Work in accordance with the Contract Documents (including, but not limited to, failure to supply sufficient skilled workers or suitable materials or equipment, or failure to adhere to the Progress Schedule);

2. Failure of Contractor to perform or otherwise to comply with a material term of the Contract Documents;

3. Contractor's disregard of Laws or Regulations of any public body having jurisdiction; or

4. Contractor's repeated disregard of the authority of Owner or Engineer.

B. If one or more of the events identified in Paragraph 16.02.A occurs, then after giving Contractor (and any surety) 10 days' written notice that Owner is considering a declaration that Contractor is in default and termination of the Contract, Owner may proceed to:

1. declare Contractor to be in default, and give Contractor (and any surety) written notice that the Contract is terminated; and

2. enforce the rights available to Owner under any applicable performance bond.

C. Subject to the terms and operation of any applicable performance bond, if Owner has terminated the Contract for cause, Owner may exclude Contractor from the Site, take possession of the Work, incorporate in the Work all materials and equipment stored at the Site or for which Owner has paid Contractor but which are stored elsewhere, and complete the Work as Owner may deem expedient.

D. Owner may not proceed with termination of the Contract under Paragraph 16.02.B if Contractor within 7 days of receipt of notice of intent to terminate begins to correct its failure to perform and proceeds diligently to cure such failure.

E. If Owner proceeds as provided in Paragraph 16.02.B, Contractor shall not be entitled to receive any further payment until the Work is completed. If the unpaid balance of the Contract Price exceeds the cost to complete the Work, including all related claims, costs, losses, and damages (including but not limited to all fees and charges of engineers, architects,

Copyright© 2018 National Society of Professional Engineers, American Council of Engineering Companies, and American Society of Civil Engineers. All rights reserved.

attorneys, and other professionals) sustained by Owner, such excess will be paid to Contractor. If the cost to complete the Work including such related claims, costs, losses, and damages exceeds such unpaid balance, Contractor shall pay the difference to Owner. Such claims, costs, losses, and damages incurred by Owner will be reviewed by Engineer as to their reasonableness and, when so approved by Engineer, incorporated in a Change Order. When exercising any rights or remedies under this paragraph, Owner shall not be required to obtain the lowest price for the Work performed.

F. Where Contractor's services have been so terminated by Owner, the termination will not affect any rights or remedies of Owner against Contractor then existing or which may thereafter accrue, or any rights or remedies of Owner against Contractor or any surety under any payment bond or performance bond. Any retention or payment of money due Contractor by Owner will not release Contractor from liability.

G. If and to the extent that Contractor has provided a performance bond under the provisions of Paragraph 6.01.A, the provisions of that bond will govern over any inconsistent provisions of Paragraphs 16.02.B and 16.02.D.

16.03 *Owner May Terminate for Convenience*

A. Upon 7 days' written notice to Contractor and Engineer, Owner may, without cause and without prejudice to any other right or remedy of Owner, terminate the Contract. In such case, Contractor shall be paid for (without duplication of any items):

1. completed and acceptable Work executed in accordance with the Contract Documents prior to the effective date of termination, including fair and reasonable sums for overhead and profit on such Work;

2. expenses sustained prior to the effective date of termination in performing services and furnishing labor, materials, or equipment as required by the Contract Documents in connection with uncompleted Work, plus fair and reasonable sums for overhead and profit on such expenses; and

3. other reasonable expenses directly attributable to termination, including costs incurred to prepare a termination for convenience cost proposal.

B. Contractor shall not be paid for any loss of anticipated profits or revenue, post-termination overhead costs, or other economic loss arising out of or resulting from such termination.

16.04 *Contractor May Stop Work or Terminate*

A. If, through no act or fault of Contractor, (1) the Work is suspended for more than 90 consecutive days by Owner or under an order of court or other public authority, or (2) Engineer fails to act on any Application for Payment within 30 days after it is submitted, or (3) Owner fails for 30 days to pay Contractor any sum finally determined to be due, then Contractor may, upon 7 days' written notice to Owner and Engineer, and provided Owner or Engineer do not remedy such suspension or failure within that time, terminate the contract and recover from Owner payment on the same terms as provided in Paragraph 16.03.

B. In lieu of terminating the Contract and without prejudice to any other right or remedy, if Engineer has failed to act on an Application for Payment within 30 days after it is submitted, or Owner has failed for 30 days to pay Contractor any sum finally determined to be due, Contractor may, 7 days after written notice to Owner and Engineer, stop the Work until payment is made of all such amounts due Contractor, including interest thereon. The

Copyright© 2018 National Society of Professional Engineers, American Council of Engineering Companies, and American Society of Civil Engineers. All rights reserved.

provisions of this paragraph are not intended to preclude Contractor from submitting a Change Proposal for an adjustment in Contract Price or Contract Times or otherwise for expenses or damage directly attributable to Contractor's stopping the Work as permitted by this paragraph.

ARTICLE 17—FINAL RESOLUTION OF DISPUTES

17.01 *Methods and Procedures*

A. *Disputes Subject to Final Resolution*: The following disputed matters are subject to final resolution under the provisions of this article:

1. A timely appeal of an approval in part and denial in part of a Claim, or of a denial in full, pursuant to Article 12; and
2. Disputes between Owner and Contractor concerning the Work, or obligations under the Contract Documents, that arise after final payment has been made.

B. *Final Resolution of Disputes*: For any dispute subject to resolution under this article, Owner or Contractor may:

1. elect in writing to invoke the dispute resolution process provided for in the Supplementary Conditions;
2. agree with the other party to submit the dispute to another dispute resolution process; or
3. if no dispute resolution process is provided for in the Supplementary Conditions or mutually agreed to, give written notice to the other party of the intent to submit the dispute to a court of competent jurisdiction.

ARTICLE 18—MISCELLANEOUS

18.01 *Giving Notice*

A. Whenever any provision of the Contract requires the giving of written notice to Owner, Engineer, or Contractor, it will be deemed to have been validly given only if delivered:

1. in person, by a commercial courier service or otherwise, to the recipient's place of business;
2. by registered or certified mail, postage prepaid, to the recipient's place of business; or
3. by e-mail to the recipient, with the words "Formal Notice" or similar in the e-mail's subject line.

18.02 *Computation of Times*

A. When any period of time is referred to in the Contract by days, it will be computed to exclude the first and include the last day of such period. If the last day of any such period falls on a Saturday or Sunday or on a day made a legal holiday by the law of the applicable jurisdiction, such day will be omitted from the computation.

EJCDC® C-700, Standard General Conditions of the Construction Contract.
Copyright© 2018 National Society of Professional Engineers, American Council of Engineering Companies, and American Society of Civil Engineers. All rights reserved.

18.03 *Cumulative Remedies*

A. The duties and obligations imposed by these General Conditions and the rights and remedies available hereunder to the parties hereto are in addition to, and are not to be construed in any way as a limitation of, any rights and remedies available to any or all of them which are otherwise imposed or available by Laws or Regulations, by special warranty or guarantee, or by other provisions of the Contract. The provisions of this paragraph will be as effective as if repeated specifically in the Contract Documents in connection with each particular duty, obligation, right, and remedy to which they apply.

18.04 *Limitation of Damages*

A. With respect to any and all Change Proposals, Claims, disputes subject to final resolution, and other matters at issue, neither Owner nor Engineer, nor any of their officers, directors, members, partners, employees, agents, consultants, or subcontractors, shall be liable to Contractor for any claims, costs, losses, or damages sustained by Contractor on or in connection with any other project or anticipated project.

18.05 *No Waiver*

A. A party's non-enforcement of any provision will not constitute a waiver of that provision, nor will it affect the enforceability of that provision or of the remainder of this Contract.

18.06 *Survival of Obligations*

A. All representations, indemnifications, warranties, and guarantees made in, required by, or given in accordance with the Contract, as well as all continuing obligations indicated in the Contract, will survive final payment, completion, and acceptance of the Work or termination of the Contract or of the services of Contractor.

18.07 *Controlling Law*

A. This Contract is to be governed by the law of the state in which the Project is located.

18.08 *Assignment of Contract*

A. Unless expressly agreed to elsewhere in the Contract, no assignment by a party to this Contract of any rights under or interests in the Contract will be binding on the other party without the written consent of the party sought to be bound; and, specifically but without limitation, money that may become due and money that is due may not be assigned without such consent (except to the extent that the effect of this restriction may be limited by law), and unless specifically stated to the contrary in any written consent to an assignment, no assignment will release or discharge the assignor from any duty or responsibility under the Contract.

18.09 *Successors and Assigns*

A. Owner and Contractor each binds itself, its successors, assigns, and legal representatives to the other party hereto, its successors, assigns, and legal representatives in respect to all covenants, agreements, and obligations contained in the Contract Documents.

18.10 *Headings*

A. Article and paragraph headings are inserted for convenience only and do not constitute parts of these General Conditions.

Copyright© 2018 National Society of Professional Engineers, American Council of Engineering Companies, and American Society of Civil Engineers. All rights reserved.

SUPPLEMENTARY CONDITIONS OF THE CONSTRUCTION CONTRACT

TABLE OF CONTENTS

Page

Article 1— Definitions and Terminology 1
Article 2— Preliminary Matters 1
Article 3— Contract Documents: Intent, Requirements, Reuse 2
Article 4— Commencement and Progress of the Work 2
Article 5— Site, Subsurface and Physical Conditions, Hazardous Environmental Conditions 3
Article 6— Bonds and Insurance 4
Article 7— Contractor's Responsibilities 8
Article 8— Other Work at the Site 10
Article 9— Owner's Responsibilities 10
Article 10— Engineer's Status During Construction 11
Article 11— Changes to the Contract 11
Article 12— Claims 11
Article 13— Cost of Work; Allowances, Unit Price Work 11
Article 14— Tests and Inspections; Correction, Removal, or Accceptance of Defective Work 11
Article 15— Payments to Contractor, Set Offs; Completions; Correction Period 12
Article 16— Suspension of Work and Termination 12
Article 17— Final Resolutions of Disputes 12
Article 18— Miscellaneous 12
Article 19— Prosecution of the Work 12

EJCDC® C-800, Supplementary Conditions of the Construction Contract.
Copyright© 2018 National Society of Professional Engineers, American Council of Engineering Companies, and American Society of Civil Engineers. All rights reserved.

SUPPLEMENTARY CONDITIONS OF THE CONSTRUCTION CONTRACT

These Supplementary Conditions amend or supplement EJCDC® C-700, Standard General Conditions of the Construction Contract (2018). The General Conditions remain in full force and effect except as amended.

The terms used in these Supplementary Conditions have the meanings stated in the General Conditions. Additional terms used in these Supplementary Conditions have the meanings stated below, which are applicable to both the singular and plural thereof.

The address system used in these Supplementary Conditions is the same as the address system used in the General Conditions, with the prefix "SC" added—for example, “Paragraph SC-4.05.”

ARTICLE 1—DEFINITIONS AND TERMINOLOGY

1.01 *Defined Terms*

SC-1.01 Delete Paragraph 1.01.A.46.c in its entirety and replace with the following:

46.c. Information and data regarding the presence or location of Underground Facilities are not intended to be categorized, identified, or defined as Technical Data.

SC-1.01 Add the following immediately after Paragraph 1.01.A.50:

51. *Special Provisions* - The part of the Contract that amends or supplements the Specifications.

52. *Request for Information* – A written request for information or clarification, requiring a written response to Owner, Engineer, or Contractor, initiated by Owner, Engineer, or Contractor.

ARTICLE 2—PRELIMINARY MATTERS

2.01 *Delivery of Bonds and Evidence of Insurance*

SC-2.02 Delete Paragraph 2.02.A in its entirety and insert the following new paragraph in its place:

A. Owner shall furnish to Contractor **[1]** electronic, fully signed copy of conformed Contract Documents incorporating and integrating all Addenda and any amendments negotiated prior to the Effective Date of the Contract.

2.03 *Before Starting Construction*

SC-2.03 Delete Paragraph 2.03.A.1 in its entirety and replace with the following:

1. A detailed Progress Schedule used to plan, coordinate, and control the progress of construction and shall include the following:

   a. provide for orderly, timely, and efficient prosecution of the Work;

   b. contain sufficient detail to enable both the Contractor and the Engineer to plan,

   coordinate, and control their respective Contract responsibilities

Copyright© 2018 National Society of Professional Engineers, American Council of Engineering Companies, and American Society of Civil Engineers. All rights reserved.

c. sufficient detail for each Bid Item of Work, at a minimum, and indicate the durations, dates for starting and completing the various stages of the Work, and including subcontractor work; and,

d. durations and relationships of required submittals, major material procurement lead times, permitting, traffic control, and any utility coordination.

2.05 *Acceptance of Schedules*

SC-2.05 Delete Paragraph 2.05.A in its entirety and replace with the following:

A. No Work on Site shall begin until acceptable schedules are submitted to Engineer.

1. The Progress Schedule will be acceptable to Engineer if it provides an orderly progression of the Work to completion within the Contract Times and meets the requirements of the Contract. Such acceptance will not impose on Engineer responsibility for the Progress Schedule, for sequencing, scheduling, or progress of the Work, nor interfere with or relieve Contractor from Contractor's full responsibility therefor.

2. Contractor's Schedule of Submittals will be acceptable to Engineer if it provides a workable arrangement for reviewing and processing the required submittals.

3. Contractor's Schedule of Values will be acceptable to Engineer as to form and substance if it provides a reasonable allocation of the Contract Price to the component parts of the Work.

4. If a schedule is not acceptable, Contractor will have an additional 3 days to revise and resubmit the schedule.

SC-2.05 Add the following immediately after Paragraph 2.05.A:

B. Acceptance of the Progress Schedule will provide an overall baseline for progressing the Work and be supplemented with a "look-ahead" Work schedule each week to the Engineer. The "look-ahead" Project Work schedule will be presented in a bar chart that shows at least three weeks of activity including the week the bar chart is issued with the largest time scale unit of 1 calendar day (smaller scales may be used) representing each activity that will be done including the location/limits of the Work. The first "look-ahead" schedule will be provided within one week after acceptance of the Progress Schedule.

ARTICLE 3—CONTRACT DOCUMENTS: INTENT, REQUIREMENTS, REUSE

3.01 *Intent*

SC-3.01 Delete Paragraph 3.01.C in its entirety.

ARTICLE 4—COMMENCEMENT AND PROGRESS OF THE WORK

4.05 *Delays in Contractor's Progress*

SC-4.05 Amend Paragraph 4.05.C by adding the following subparagraphs:

5. *Weather-Related Delays*

a. If "abnormal weather conditions" as set forth in Paragraph 4.05.C.2 of the General Conditions are the basis for a request for an equitable adjustment in the Contract

Copyright© 2018 National Society of Professional Engineers, American Council of Engineering Companies, and American Society of Civil Engineers. All rights reserved.

Times, such request must be documented by data substantiating each of the following: 1) that weather conditions were abnormal for the period of time in which the delay occurred, 2) that such weather conditions could not have been reasonably anticipated, and 3) that such weather conditions had an adverse effect on the Work as scheduled.

b. The existence of abnormal weather conditions will not relieve Contractor of the obligation to demonstrate and document that delays caused by abnormal weather are specific to the planned work activities or that such activities thus delayed were on Contractor's then-current Progress Schedule's critical path for the Project.

ARTICLE 5—SITE, SUBSURFACE AND PHYSICAL CONDITIONS, HAZARDOUS ENVIRONMENTAL CONDITIONS

5.02 *Use of Site and Other Areas*

SC-5.02 Delete Paragraph 5.02.A.2 and insert the following paragraph in its place:

A. 2. If a damage or injury claim is made by the owner or occupant of any such land or area because of the performance of the Work, or because of other actions or conduct of the Contractor or those for which Contractor is responsible, Contractor shall (a) take immediate corrective or remedial action as required by Paragraph 7.13, or otherwise; (b) promptly attempt to settle the claim as to all parties through negotiations with such owner or occupant, or otherwise resolve the claim by arbitration or other dispute resolution proceeding, or in a court of competent jurisdiction; and (c) to the fullest extent permitted by Laws and Regulations, defend, indemnify and hold harmless Owner and Engineer, and the officers, directors, members, partners, employees, agents, consultants and subcontractors of each and any of them, from and against any such claim, and against all costs, losses, and damages (including but not limited to all fees and charges of engineers, architects, attorneys, and other professionals and all court or arbitration or other dispute resolution costs) arising out of or relating to any claim or action, legal or equitable, brought by any such owner or occupant against Owner, Engineer, or any other party indemnified hereunder to the extent caused directly or indirectly, in whole or in part by, or based upon, Contractor's performance of the Work, or because of other actions or conduct of the Contractor or those for which Contractor is responsible.

SC-5.06 Delete Paragraph 5.06.J and insert the following paragraph in its place:

To the fullest extent permitted by Laws and Regulations, Contractor shall indemnify and hold harmless Owner and Engineer, and the officers, directors, members, partners, employees, agents, consultants, and subcontractors of each and any of them, from and against all claims, costs, losses, and damages (including but not limited to all fees and charges of engineers, architects, attorneys, and other professionals and all court or arbitration or other dispute resolution costs) arising out of or relating to the failure to control, contain, or remove a Constituent of Concern brought to the Site by Contractor or by anyone for whom Contractor is responsible, or to a Hazardous Environmental Condition created by Contractor or by anyone for Whom Contractor is responsible. Nothing in Paragraph 5.06.J obligates

Copyright© 2018 National Society of Professional Engineers, American Council of Engineering Companies, and American Society of Civil Engineers. All rights reserved.

Contractor to indemnify any individual or entity from and against the consequences of that individual's or entity's own negligence.

ARTICLE 6—BONDS AND INSURANCE

6.02 *Insurance—General Provisions*

SC-6.02 Add the following paragraph immediately after Paragraph 6.02.B:

1. Contractor may obtain worker's compensation insurance from an insurance company that has not been rated by A.M. Best, provided that such company (a) is domiciled in the state in which the Project is located, (b) is certified or authorized as a worker's compensation insurance provider by the appropriate state agency, and (c) has been accepted to provide worker's compensation insurance for similar projects by the state within the last 12 months.

SC-6.02 Add the following paragraph immediately after Paragraph 6.02.D:

1. All certificates of insurance shall name as additionally insured:
    a. City of Sandpoint

6.03 *Contractor's Insurance*

SC-6.03 Supplement Paragraph 6.03 with the following provisions after Paragraph 6.03.C:

D. *Workers' Compensation and Employer's Liability:* Contractor shall purchase and maintain workers' compensation and employer's liability insurance, including, as applicable, United States Longshoreman and Harbor Workers' Compensation Act, Jones Act, stop-gap employer's liability coverage for monopolistic states, and foreign voluntary workers' compensation (from available sources, notwithstanding the jurisdictional requirement of Paragraph 6.02.B of the General Conditions). All insurance policies shall contain a Waiver of Subrogation coverage or endorsements.

Workers' Compensation and Related Policies	Policy limits of not less than:
Workers' Compensation	
State	Statutory
Applicable Federal (e.g., Longshoreman's)	Statutory
Foreign voluntary workers' compensation (employer's responsibility coverage), if applicable	Statutory

F. *Commercial General Liability—Claims Covered:* Contractor shall purchase and maintain commercial general liability insurance, covering all operations by or on behalf of Contractor, on an occurrence basis, against claims for:

1. damages because of bodily injury, sickness or disease, or death of any person other than Contractor's employees,
2. damages insured by reasonably available personal injury liability coverage, and
3. damages because of injury to or destruction of tangible property wherever located, including loss of use resulting therefrom.

Copyright© 2018 National Society of Professional Engineers, American Council of Engineering Companies, and American Society of Civil Engineers. All rights reserved.

G. *Commercial General Liability—Form and Content:* Contractor's commercial liability policy must be written on a 1996 (or later) Insurance Services Organization, Inc. (ISO) commercial general liability form (occurrence form) and include the following coverages and endorsements:

1. Products and completed operations coverage.
    a. Such insurance must be maintained for three years after final payment.
    b. Contractor shall furnish Owner and each other additional insured (as identified in the Supplementary Conditions or elsewhere in the Contract) evidence of continuation of such insurance at final payment and three years thereafter.
2. Blanket contractual liability coverage, including but not limited to coverage of Contractor's contractual indemnity obligations in Paragraph 7.18.
3. Severability of interests and no insured-versus-insured or cross-liability exclusions.
4. Underground, explosion, and collapse coverage.
5. Personal injury coverage.
6. Additional insured endorsements that include both ongoing operations and products and completed operations coverage through ISO Endorsements CG 20 10 10 01 and CG 20 37 10 01 (together). If Contractor demonstrates to Owner that the specified ISO endorsements are not commercially available, then Contractor may satisfy this requirement by providing equivalent endorsements.
7. For design professional additional insureds, ISO Endorsement CG 20 32 07 04 "Additional Insured—Engineers, Architects or Surveyors Not Engaged by the Named Insured" or its equivalent.
8. All policies shall contain waiver of subrogation coverage or endorsements.

H. *Commercial General Liability—Excluded Content:* The commercial general liability insurance policy, including its coverages, endorsements, and incorporated provisions, must not include any of the following:

1. Any modification of the standard definition of "insured contract" (except to delete the railroad protective liability exclusion if Contractor is required to indemnify a railroad or others with respect to Work within 50 feet of railroad property).
2. Any exclusion for water intrusion or water damage.
3. Any provisions resulting in the erosion of insurance limits by defense costs other than those already incorporated in ISO form CG 00 01.
4. Any exclusion of coverage relating to earth subsidence or movement.
5. Any exclusion for the insured's vicarious liability, strict liability, or statutory liability (other than worker's compensation).
6. Any limitation or exclusion based on the nature of Contractor's work.
7. Any professional liability exclusion broader in effect than the most recent edition of ISO form CG 22 79.

Copyright© 2018 National Society of Professional Engineers, American Council of Engineering Companies, and American Society of Civil Engineers. All rights reserved.

I. *Commercial General Liability—Minimum Policy Limits*

Commercial General Liability	Policy limits of not less than:
General Aggregate	$2,000,000.00
Products—Completed Operations Aggregate	$2,000,000.00
Personal and Advertising Injury	$1,000,000.00
Bodily Injury and Property Damage—Each Occurrence	$1,000,000.00

J. *Automobile Liability:* Contractor shall purchase and maintain automobile liability insurance for damages because of bodily injury or death of any person or property damage arising out of the ownership, maintenance, or use of any motor vehicle. The automobile liability policy must be written on an occurrence basis.

Automobile Liability	Policy limits of not less than:
Combined Single Limit	
Combined Single Limit (Bodily Injury and Property Damage)	$1,000,000.00

K. *Umbrella or Excess Liability:* Contractor shall purchase and maintain umbrella or excess liability insurance written over the underlying employer's liability, commercial general liability, and automobile liability insurance described in the Paragraphs above. The coverage afforded must be at least as broad as that of each and every one of the underlying policies.

Excess or Umbrella Liability	Policy limits of not less than:
Each Occurrence	$2,000,000.00
General Aggregate	$2,000,000.00

L. *Using Umbrella or Excess Liability Insurance to Meet CGL and Other Policy Limit Requirements:* Contractor may meet the policy limits specified for employer's liability, commercial general liability, and automobile liability through the primary policies alone, or through combinations of the primary insurance policy's policy limits and partial attribution of the policy limits of an umbrella or excess liability policy that is at least as broad in coverage as that of the underlying policy, as specified herein.

M. *Contractor's Pollution Liability Insurance:* Contractor shall purchase and maintain a policy covering third-party injury and property damage, including cleanup costs, as a result of pollution conditions arising from Contractor's operations and completed operations. This insurance must be maintained for no less than three years after final completion.

Contractor's Pollution Liability	Policy limits of not less than:
General Aggregate	$1,000,000.00

N. *Contractor's Professional Liability Insurance:* If Contractor will provide or furnish professional services under this *Contract*, through a delegation of professional design services or otherwise, then Contractor shall be responsible for purchasing and maintaining applicable

Copyright© 2018 National Society of Professional Engineers, American Council of Engineering Companies, and American Society of Civil Engineers. All rights reserved.

professional liability insurance. This insurance must cover negligent acts, errors, or omissions in the performance of professional design or related services by the insured or others for whom the insured is legally liable. The insurance must be maintained throughout the duration of the Contract and for a minimum of two years after Substantial Completion. The retroactive date on the policy must pre-date the commencement of furnishing services on the Project.

Contractor's Professional Liability	Policy limits of not less than:
Each Claim	$500,000.00
Annual Aggregate	$1,000,000.00

6.04 *Builder's Risk and Other Property Insurance*

SC-6.04 Add the following immediately after Paragraph 6.04.E:

F. *Builder's Risk Requirements:* The builder's risk insurance must:

1. be written on a builder's risk "all risk" policy form that at a minimum includes insurance for physical loss or damage to the Work, temporary buildings, falsework, and materials and equipment stored and in transit, and must not exclude the coverage of the following risks: fire; windstorm; hail; flood; earthquake, volcanic activity, and other earth movement; lightning; riot; civil commotion; terrorism; vehicle impact; aircraft; smoke; theft; vandalism and malicious mischief; mechanical breakdown, boiler explosion, and artificially generated electric current; collapse; explosion; debris removal; demolition occasioned by enforcement of Laws and Regulations; and water damage (other than that caused by flood).

    a. Such policy will include an exception that results in coverage for ensuing losses from physical damage or loss with respect to any defective workmanship, methods, design, or materials exclusions.

    b. If insurance against mechanical breakdown, boiler explosion, and artificially generated electric current; earthquake, volcanic activity, and other earth movement; or flood, are not commercially available under builder's risk policies, by endorsement or otherwise, such insurance will be provided through other insurance policies acceptable to Owner and Contractor.

2. cover, as insured property, at least the following: (a) the Work and all materials, supplies, machinery, apparatus, equipment, fixtures, and other property of a similar nature that are to be incorporated into or used in the preparation, fabrication, construction, erection, or completion of the Work, including Owner-furnished or assigned property; (b) spare parts inventory required within the scope of the Contract; and (c) temporary works which are not intended to form part of the permanent constructed Work but which are intended to provide working access to the Site, or to the Work under construction, or which are intended to provide temporary support for the Work under construction, including scaffolding, form work, fences, shoring, falsework, and temporary structures.

3. cover expenses incurred in the repair or replacement of any insured property (including but not limited to fees and charges of contractors, engineers, and architects).

Copyright© 2018 National Society of Professional Engineers, American Council of Engineering Companies, and American Society of Civil Engineers. All rights reserved.

4. extend to cover damage or loss to insured property while in temporary storage at the Site or in a storage location outside the Site (but not including property stored at the premises of a manufacturer or Supplier).
5. extend to cover damage or loss to insured property while in transit.
6. allow for the waiver of the insurer's subrogation rights, as set forth in this Contract.
7. allow for partial occupancy or use by Owner by endorsement, and without cancellation or lapse of coverage.
8. include performance/hot testing and start-up, if applicable.
9. be maintained in effect until the Work is complete, as set forth in Paragraph 15.06.D of the General Conditions, or until written confirmation of Owner's procurement of property insurance following Substantial Completion, whichever occurs first.
10 include as named insureds the Owner, Contractor, Subcontractors (of every tier), and any other individuals or entities required by this Contract to be insured under such builder's risk policy. For purposes of Paragraphs 6.04, 6.05, and 6.06 of the General Conditions, and this and all other corresponding Supplementary Conditions, the parties required to be insured will be referred to collectively as "insureds."

ARTICLE 7—CONTRACTOR'S RESPONSIBILITIES

7.03 *Labor; Working Hours*

SC-7.03 Delete Paragraph 7.03.C in its entirety, and insert the following:

C. Contractor may perform the Work at the Site only between the hours of 6:30AM and 10PM, Monday thru Sunday unless otherwise authorized by the Owner in writing.

7.10 *Taxes*

SC-7.10 Add the following paragraph immediately after Paragraph 7.10.A:

B. In the event of the Contractor's default on the payment of taxes, excises, and license fees as set forth in Idaho Code 63-1503, the Owner shall have the authority to withhold from any payment due the Contractor under this contract, the estimated amount of such accrued and accruing taxes, excises, and license fees for the benefit of all taxing authorities to which said Contractor is liable.

Copyright© 2018 National Society of Professional Engineers, American Council of Engineering Companies, and American Society of Civil Engineers. All rights reserved.

7.11 *Laws and Regulations*

SC-7.11 Add the following paragraph immediately after Paragraph 7.11.C:

D. While not intended to be inclusive of all Laws or Regulations for which Contractor may be responsible under paragraph 6.09, the following Laws or Regulations are included as mandated by statute or for the convenience of the Contractor;

1. **Idaho Code Section 63-1501. Definitions.** As used in this act, the following terms shall have the following meanings:

   "Contracting units" shall include the state or any officer or department thereof, the counties or other subdivisions of the state, and all municipal and quasi-municipal corporations therein.

   "Contractor" shall mean any person, firm, co-partnership, association, or corporation, foreign or domestic, entering into a contract for the construction, erection, repair, or improvement of any kind or character of public works in this state.

   "Taxes" shall mean all taxes, assessments, excises, and license fees authorized to be levied, assessed, and collected under the laws of this state, other than taxes on real property.

   "Taxing unit" shall mean the state or any officer or department thereof, the counties or other subdivisions of the state, and all municipal and quasi-municipal corporations therein authorized by law to assess, levy and collect taxes.

2. **Idaho Code Section 63-1502. Conditions precedent to contract for public works.** Before entering into a contract for the construction of any public works in this state, the contracting unit shall require as conditions precedent that the contractor be authorized to do business in this state and that he furnish satisfactory evidence that he has paid or secured to the satisfaction of the respective taxing units all taxes for which he or his property is liable then due or delinquent.

3. **Idaho Code Section 63-1503. Contractor for public works to pay or secure taxes—Agreement.** Every contract for the construction of public works by a contracting unit of this state shall contain substantially the following provisions:

   The Contractor, in consideration of securing the business of erecting or constructing public works in this state, recognizing that the business in which he is engaged is of a transitory character, and that in the pursuit thereof, his property used therein may be without the state when taxes, excises, or license fees to which he is liable become payable, agrees:

   a. To pay promptly when due all taxes (other than on real property), excises and license fees due to the state, its subdivisions, and municipal and quasi-municipal corporations therein accrued or accruing during the term of this contract, whether or not the same shall be payable at the end of such term;

   b. That if the said taxes, excises, and license fees are not payable at the end of said term, but liability for the payment thereof exists, even though the same constitute liens upon his property, to secure the same to the satisfaction of the respective officers charged with the collection thereof; and

Copyright© 2018 National Society of Professional Engineers, American Council of Engineering Companies, and American Society of Civil Engineers. All rights reserved.

c. That in the event of his default in the payment or securing of such taxes, excises, and license fees, to consent that the department, officer, board, or taxing unit entering into this contract may withhold from any payment due him hereunder the estimated amount of such accrued and accruing taxes, excises, and license fees for the benefit of all taxing units to which said contractor is liable.

4. **Idaho Code Section 44-1002** requires the following: The Contractor must employ ninety-five percent (95%) bona fide Idaho residents as employees on any job under any such contract except where under such contracts fifty (50) or less persons are employed, the Contractor may employ ten percent (10%) nonresidents, provided, however, in all cases employers must give preference to the employment of bona fide residents in the performance of said work, and no contract shall be let to any person, firm, association, or corporation refusing to execute an agreement with the above mentioned provisions in it; provided, that, in contracts involving the expenditure of federal aid funds this act shall not be enforced in such a manner as to conflict with or be contrary to the federal statutes prescribing a labor preference to honorably discharged soldiers, sailors, and marines, prohibiting as unlawful any other preference or discrimination among citizens of the United States.

5. **Idaho Code Chapter 19 of Title 54** requires proper licensing of Public Works Contractors.

7.18 *Indemnification*

SC-7.18 Delete Paragraph 7.18.A in its entirety and insert the following paragraph in its place:

A. To the fullest extent permitted by Laws and Regulations, and in addition to any other obligations of Contractor under the Contract or otherwise, Contractor shall indemnify and hold harmless Owner and Engineer, and the officers, directors, members, partners, employees, agents, consultants and subcontractors of each and any of them, from losses, damages, costs, and judgments (including but not limited to all fees and charges of engineers, architects, attorneys, and other professionals, and all court or arbitration or other dispute resolution costs) arising from third-party claims or actions relating to or resulting from the performance or furnishing of the Work, provided that any such claim, action, loss, cost, judgment or damage is attributable to bodily injury, sickness, disease, or death, or to damage to or destruction of tangible property)other than the Work itself), including the loss of use resulting therefrom, but only to the extent caused by any negligent act or omission of Contractor, any Subcontractor, any Supplier, or any individual or entity directly or indirectly employed by any of them to perform any of the Work, or anyone for whose acts any of them may be liable.

ARTICLE 8—OTHER WORK AT THE SITE

No Supplementary Conditions in this Article.

ARTICLE 9—OWNER'S RESPONSIBILITIES

No Supplementary Conditions in this Article.

Copyright© 2018 National Society of Professional Engineers, American Council of Engineering Companies, and American Society of Civil Engineers. All rights reserved.

ARTICLE 10—ENGINEER'S STATUS DURING CONSTRUCTION

10.02 *Visits to Site.*

SC-10.02 Delete Paragraphs 10.02 in its entirety.

10.03 *Resident Project Representative.*

SC-10.03 Delete Paragraphs 10.03 in its entirety.

ARTICLE 11—CHANGES TO THE CONTRACT

No Supplementary Conditions in this Article.

ARTICLE 12—CLAIMS

No Supplementary Conditions in this Article.

ARTICLE 13—COST OF WORK; ALLOWANCES, UNIT PRICE WORK

13.03 *Unit Price Work*

SC-13.03 Delete Paragraph 13.03.E in its entirety and insert the following in its place:

E. *Adjustments in Unit Price*

1. Contractor or Owner shall be entitled to an adjustment in the unit price with respect to an item of Unit Price Work if:

    a. the extended price of a particular item of Unit Price Work amounts to 10 percent or more of the Contract Price (based on estimated quantities at the time of Contract formation) and the variation in the quantity of that particular item of Unit Price Work actually furnished or performed by Contractor differs by more than 25 percent from the estimated quantity of such item indicated in the Agreement; and

    b. Contractor's unit costs to perform the item of Unit Price Work have changed materially and significantly as a result of the quantity change.

2. The adjustment in unit price will account for and be coordinated with any related changes in quantities of other items of Work, and in Contractor's costs to perform such other Work, such that the resulting overall change in Contract Price is equitable to Owner and Contractor.

3. Adjusted unit prices will apply to all units of that item.

ARTICLE 14—TESTS AND INSPECTIONS; CORRECTION, REMOVAL, OR ACCCEPTANCE OF DEFECTIVE WORK

No Supplementary Conditions in this Article.

Copyright© 2018 National Society of Professional Engineers, American Council of Engineering Companies, and American Society of Civil Engineers. All rights reserved.

ARTICLE 15—PAYMENTS TO CONTRACTOR, SET OFFS; COMPLETIONS; CORRECTION PERIOD

No Supplementary Conditions in this Article.

ARTICLE 16—SUSPENSION OF WORK AND TERMINATION

No Supplementary Conditions in this Article.

ARTICLE 17—FINAL RESOLUTIONS OF DISPUTES

No Supplementary Conditions in this Article.

ARTICLE 18—MISCELLANEOUS

SC-18.07 Delete Paragraph 18.07 in its entirety and insert the following paragraph in its place:

18.07 Controlling Law

This Contract is to be governed by the law of the State of Idaho. The jurisdiction/venue for any action arising out of performance of this Contract, or interpretation of its terms and conditions, shall be in the District Court in the First Judicial District of the State of Idaho, Bonner County. In any action to enforce the terms and conditions of this Contract, the prevailing party may recover its reasonable attorney fees.

Add the following Article 19 – Prosecution of the Work, immediately following Article 18 - Miscellaneous.

ARTICLE 19—PROSECUTION OF THE WORK

SC-19.01 *General*

A. From the time of commencement of the Work to the time of Final Acceptance the Contractor shall: provide adequate Materials, Equipment, labor, and supervision to perform and complete the Work; perform the Work as vigorously and as continuously as conditions permit, and according to a Project Work schedule that ensures completion within the Contract Time or the adjusted Contract Time; not voluntarily suspend or slow down operations without prior written approval from the Engineer; and not resume suspended Work without the Engineer's written authorization.

SC-19.02 *Cost Reduction Proposals*

A. The Contractor may submit written proposals to the Engineer that modify Plans, Specifications, or other Contract Documents for the sole purpose of reducing the total cost of construction. Unless otherwise agreed to in writing, a proposal that is solely or primarily a proposal to reduce estimated quantities or delete Work, is not eligible for consideration as a cost reduction proposal.

B. Proposal Requirements - The Engineer will not adopt a cost reduction proposal that impairs essential functions or characteristics of the Project, including, but not limited to, service life, economy of operation, ease of maintenance, designed appearance, or design and safety standards.

Copyright© 2018 National Society of Professional Engineers, American Council of Engineering Companies, and American Society of Civil Engineers. All rights reserved.

To conserve time and funds, the Contractor may first submit a written request for a feasibility review by the Engineer. The request should contain a description of the proposal together with a rough estimate of anticipated dollar and time savings. The Engineer will, within a reasonable time, advise the Contractor in writing whether or not the proposal would be considered by the Engineer, should the Contractor elect to submit a detailed cost reduction proposal.

C. A detailed cost reduction proposal shall include without limitation the following information:

1. A description of existing Contract requirements for performing the Work and the proposed change;
2. The Contract items of Work affected by the proposed change, including any quantity variation caused by the proposed change;
3. Pay Items affected by the proposed change including any quantity variations;
4. A detailed cost estimate for performing the Work under the existing Contract and under the proposed change.

Costs of re-design, which are incurred after the Engineer has accepted the proposal, shall be included in the cost of proposed work; and a date by which the Engineer must accept the proposal in order to accept the proposed change without impacting the Contract Time or cost reduction amount.

D. Continuing to Perform Work - The Contractor shall continue to perform the Work according to Contract requirements until the Engineer issues a Change Order incorporating the cost reduction proposal. If the Engineer fails to issue a Change Order by the date specified in the proposal, the proposal shall be deemed rejected.

E. Consideration of Proposal - The Engineer is not obligated to consider any cost reduction proposal. The Engineer will not be liable to the Contractor for failure to accept or act upon any cost reduction proposal submitted. The Engineer will determine in its sole discretion whether to accept a cost reduction proposal as well as the estimated net savings in construction costs from the adoption of all or any part of the proposal. In determining the estimated net savings, the Engineer may disregard the Schedule of Items. The Engineer will establish prices that represent a fair measure of the value of Work to be performed or to be deleted as a result of the cost reduction proposal.

F. Sharing Investigation Costs - As a condition for considering a Contractor's cost reduction proposal, the Engineer reserves the right to require the Contractor to share in the Engineer's costs of investigating the proposal. If the Engineer exercises this right, the Contractor shall provide written acceptance of the condition to the Engineer. Such acceptance will authorize the Engineer to deduct its share of investigation costs from payments due or that may become due to the Contractor under the Contract.

G. Acceptance of Proposal Requirements - If the Contractor's cost reduction proposal is accepted in whole or in part, acceptance will be made by a Change Order. The Contractor's cost of preparing the cost reduction proposal and the Engineer's costs of investigating the proposal, including any portion paid by the Contractor, will be excluded from determination of the estimated net savings in construction costs. Costs of re-design, which are incurred

Copyright© 2018 National Society of Professional Engineers, American Council of Engineering Companies, and American Society of Civil Engineers. All rights reserved.

after the Engineer has accepted the proposal, will be included in the cost of the Work attributable to cost reduction measures. If the Engineer accepts the cost reduction proposal, the Change Order that authorizes the cost reduction measures will also address any Contract Time adjustment.

SC-19.03 *Force Account Work*

The Materials, Equipment and labor rates and procedures established in this Section apply to Extra Work ordered by the Engineer to be performed as Force Account Work.

A. Extra Work on a Force Account Basis - Before ordering Force Account Work, the Engineer will discuss the proposed work with the Contractor, and will seek the Contractor's comments and advice concerning the formulation of Force Account Work specifications. The Engineer is not bound by the Contractor's comments and advice, and has final authority to: determine and direct the Materials, Equipment and labor to be used on the approved Force Account Work and to determine the time of the Contractor's performance of the ordered Force Account Work.

B. If the Engineer orders the performance of Extra Work as Force Account Work, the Engineer will record, on a daily basis, the Materials, Equipment, labor, and Special Services used for the Force Account Work during that day. The Engineer and the Contractor shall sign the record daily to indicate agreement on the Materials, Equipment, labor, and Special Services used for the Force Account Work performed on that day.

C. The Owner will not be responsible for additional costs that are a direct or indirect result of the Contractor's inefficient means and methods or that reasonably could have been avoided if the Materials, Equipment, labor or services had been obtained at a more commercially reasonable cost.

D. Payment for Force Account Work shall be negotiated and agreed upon by Change Order.

Copyright© 2018 National Society of Professional Engineers, American Council of Engineering Companies, and American Society of Civil Engineers. All rights reserved.

PERFORMANCE BOND

Contractor Name: Ginno Construction of Idaho, Inc. Address *(principal place of business)*: 3893 N. Schreiber Way Coeur d' Alene, ID 83815	**Surety** Name: Address *(principal place of business)*:
Owner Name: City of Sandpoint Mailing address *(principal place of business)*: 1123 Lake St. Sandpoint, Idaho 83864	**Contract** Description *(name and location)*: **A24-5300-6: Travers Park Playground & Splash Pad Construction** Contract Price: **$881,000** Effective Date of Contract: June 6, 2024

Bond

Bond Amount:

Date of Bond:

(~~Date of Bond cannot be earlier than~~ Effective Date of Contract)

Modifications to this Bond form:

☐ None ☐ See Paragraph 16

Surety and Contractor, intending to be legally bound hereby, subject to the terms set forth in this Performance Bond, do each cause this Performance Bond to be duly executed by an authorized officer, agent, or representative.

Contractor as Principal	Surety
_____ *(Full formal name of Contractor)*	_____ *(Full formal name of Surety) (corporate seal)*
By: _____ *(Signature)*	By: _____ *(Signature)(Attach Power of Attorney)*
Name: _____ *(Printed or typed)*	Name: _____ *(Printed or typed)*
Title: _____	Title: _____
Attest: _____ *(Signature)*	Attest: _____ *(Signature)*
Name: _____ *(Printed or typed)*	Name: _____ *(Printed or typed)*
Title: _____	Title: _____

Notes: (1) Provide supplemental execution by any additional parties, such as joint venturers. (2) Any singular reference to Contractor, Surety, Owner, or other party is considered plural where applicable.

1. The Contractor and Surety, jointly and severally, bind themselves, their heirs, executors, administrators, successors, and assigns to the Owner for the performance of the Construction Contract, which is incorporated herein by reference.
2. If the Contractor performs the Construction Contract, the Surety and the Contractor shall have no obligation under this Bond, except when applicable to participate in a conference as provided in Paragraph 3.
3. If there is no Owner Default under the Construction Contract, the Surety's obligation under this Bond will arise after:
    3.1. The Owner first provides notice to the Contractor and the Surety that the Owner is considering declaring a Contractor Default. Such notice may indicate whether the Owner is requesting a conference among the Owner, Contractor, and Surety to discuss the Contractor's performance. If the Owner does not request a conference, the Surety may, within five (5) business days after receipt of the Owner's notice, request such a conference. If the Surety timely requests a conference, the Owner shall attend. Unless the Owner agrees otherwise, any conference requested under this Paragraph 3.1 will be held within ten (10) business days of the Surety's receipt of the Owner's notice. If the Owner, the Contractor, and the Surety agree, the Contractor shall be allowed a reasonable time to perform the Construction Contract, but such an agreement does not waive the Owner's right, if any, subsequently to declare a Contractor Default;
    3.2. The Owner declares a Contractor Default, terminates the Construction Contract and notifies the Surety; and
    3.3. The Owner has agreed to pay the Balance of the Contract Price in accordance with the terms of the Construction Contract to the Surety or to a contractor selected to perform the Construction Contract.
4. Failure on the part of the Owner to comply with the notice requirement in Paragraph 3.1 does not constitute a failure to comply with a condition precedent to the Surety's obligations, or release the Surety from its obligations, except to the extent the Surety demonstrates actual prejudice.
5. When the Owner has satisfied the conditions of Paragraph 3, the Surety shall promptly and at the Surety's expense take one of the following actions:
    5.1. Arrange for the Contractor, with the consent of the Owner, to perform and complete the Construction Contract;
    5.2. Undertake to perform and complete the Construction Contract itself, through its agents or independent contractors;
    5.3. Obtain bids or negotiated proposals from qualified contractors acceptable to the Owner for a contract for performance and completion of the Construction Contract, arrange for a contract to be prepared for execution by the Owner and a contractor selected with the Owners concurrence, to be secured with performance and payment bonds executed by a qualified surety equivalent to the bonds issued on the Construction Contract, and pay to the Owner the amount of damages as described in Paragraph 7 in excess of the Balance of the Contract Price incurred by the Owner as a result of the Contractor Default; or
    5.4. Waive its right to perform and complete, arrange for completion, or obtain a new contractor, and with reasonable promptness under the circumstances:

5.4.1 After investigation, determine the amount for which it may be liable to the Owner and, as soon as practicable after the amount is determined, make payment to the Owner; or

5.4.2 Deny liability in whole or in part and notify the Owner, citing the reasons for denial.

6. If the Surety does not proceed as provided in Paragraph 5 with reasonable promptness, the Surety shall be deemed to be in default on this Bond seven days after receipt of an additional written notice from the Owner to the Surety demanding that the Surety perform its obligations under this Bond, and the Owner shall be entitled to enforce any remedy available to the Owner. If the Surety proceeds as provided in Paragraph 5.4, and the Owner refuses the payment, or the Surety has denied liability, in whole or in part, without further notice, the Owner shall be entitled to enforce any remedy available to the Owner.

7. If the Surety elects to act under Paragraph 5.1, 5.2, or 5.3, then the responsibilities of the Surety to the Owner will not be greater than those of the Contractor under the Construction Contract, and the responsibilities of the Owner to the Surety will not be greater than those of the Owner under the Construction Contract. Subject to the commitment by the Owner to pay the Balance of the Contract Price, the Surety is obligated, without duplication for:

   7.1. the responsibilities of the Contractor for correction of defective work and completion of the Construction Contract;

   7.2. additional legal, design professional, and delay costs resulting from the Contractor's Default, and resulting from the actions or failure to act of the Surety under Paragraph 5; and

   7.3. liquidated damages, or if no liquidated damages are specified in the Construction Contract, actual damages caused by delayed performance or non-performance of the Contractor.

8. If the Surety elects to act under Paragraph 5.1, 5.3, or 5.4, the Surety's liability is limited to the amount of this Bond.

9. The Surety shall not be liable to the Owner or others for obligations of the Contractor that are unrelated to the Construction Contract, and the Balance of the Contract Price will not be reduced or set off on account of any such unrelated obligations. No right of action will accrue on this Bond to any person or entity other than the Owner or its heirs, executors, administrators, successors, and assigns.

10. The Surety hereby waives notice of any change, including changes of time, to the Construction Contract or to related subcontracts, purchase orders, and other obligations.

11. Any proceeding, legal or equitable, under this Bond must be instituted in any court of competent jurisdiction in the location in which the work or part of the work is located and must be instituted within two years after a declaration of Contractor Default or within two years after the Contractor ceased working or within two years after the Surety refuses or fails to perform its obligations under this Bond, whichever occurs first. If the provisions of this paragraph are void or prohibited by law, the minimum periods of limitations available to sureties as a defense in the jurisdiction of the suit will be applicable.

12. Notice to the Surety, the Owner, or the Contractor must be mailed or delivered to the address shown on the page on which their signature appears.

13. When this Bond has been furnished to comply with a statutory or other legal requirement in the location where the construction was to be performed, any provision in this Bond conflicting with said statutory or legal requirement will be deemed deleted therefrom and provisions conforming to such

statutory or other legal requirement will be deemed incorporated herein. When so furnished, the intent is that this Bond will be construed as a statutory bond and not as a common law bond.

14. Definitions

    14.1. *Balance of the Contract Price*—The total amount payable by the Owner to the Contractor under the Construction Contract after all proper adjustments have been made including allowance for the Contractor for any amounts received or to be received by the Owner in settlement of insurance or other claims for damages to which the Contractor is entitled, reduced by all valid and proper payments made to or on behalf of the Contractor under the Construction Contract.

    14.2. *Construction Contract*—The agreement between the Owner and Contractor identified on the cover page, including all Contract Documents and changes made to the agreement and the Contract Documents.

    14.3. *Contractor Default*—Failure of the Contractor, which has not been remedied or waived, to perform or otherwise to comply with a material term of the Construction Contract.

    14.4. *Owner Default*—Failure of the Owner, which has not been remedied or waived, to pay the Contractor as required under the Construction Contract or to perform and complete or comply with the other material terms of the Construction Contract.

    14.5. *Contract Documents*—All the documents that comprise the agreement between the Owner and Contractor.

15. If this Bond is issued for an agreement between a contractor and subcontractor, the term Contractor in this Bond will be deemed to be Subcontractor and the term Owner will be deemed to be Contractor.

16. Modifications to this Bond are as follows: **None**

PAYMENT BOND

Contractor	**Surety**
Name: **Ginno Construction of Idaho, Inc.** Address *(principal place of business)*: **3893 N. Shreiber Way** **Coeur d' Alene, ID 83815**	Name: Address *(principal place of business)*:
Owner	**Contract**
Name: **City of Sandpoint** Mailing address *(principal place of business)*: **1123 Lake St.** **Sandpoint, ID 83864**	Description *(name and location)*: **A24-5300-6: Travers Park Playground & Splash Pad Construction** Contract Price: **$881,000** Effective Date of Contract: **June 6, 2024**

Bond

Bond Amount:

Date of Bond:

(~~Date of Bond cannot be earlier than~~ Effective Date of Contract)

Modifications to this Bond form:

☐ None ☐ See Paragraph 18

Surety and Contractor, intending to be legally bound hereby, subject to the terms set forth in this Payment Bond, do each cause this Payment Bond to be duly executed by an authorized officer, agent, or representative.

Contractor as Principal	Surety
_____ *(Full formal name of Contractor)*	_____ *(Full formal name of Surety) (corporate seal)*
By: _____ *(Signature)*	By: _____ *(Signature)(Attach Power of Attorney)*
Name: _____ *(Printed or typed)*	Name: _____ *(Printed or typed)*
Title: _____	Title: _____
Attest: _____ *(Signature)*	Attest: _____ *(Signature)*
Name: _____ *(Printed or typed)*	Name: _____ *(Printed or typed)*
Title: _____	Title: _____

Notes: (1) Provide supplemental execution by any additional parties, such as joint venturers. (2) Any singular reference to Contractor, Surety, Owner, or other party is considered plural where applicable.

1. The Contractor and Surety, jointly and severally, bind themselves, their heirs, executors, administrators, successors, and assigns to the Owner to pay for labor, materials, and equipment furnished for use in the performance of the Construction Contract, which is incorporated herein by reference, subject to the following terms.
2. If the Contractor promptly makes payment of all sums due to Claimants, and defends, indemnifies, and holds harmless the Owner from claims, demands, liens, or suits by any person or entity seeking payment for labor, materials, or equipment furnished for use in the performance of the Construction Contract, then the Surety and the Contractor shall have no obligation under this Bond.
3. If there is no Owner Default under the Construction Contract, the Surety's obligation to the Owner under this Bond will arise after the Owner has promptly notified the Contractor and the Surety (at the address described in Paragraph 13) of claims, demands, liens, or suits against the Owner or the Owner's property by any person or entity seeking payment for labor, materials, or equipment furnished for use in the performance of the Construction Contract, and tendered defense of such claims, demands, liens, or suits to the Contractor and the Surety.
4. When the Owner has satisfied the conditions in Paragraph 3, the Surety shall promptly and at the Surety's expense defend, indemnify, and hold harmless the Owner against a duly tendered claim, demand, lien, or suit.
5. The Surety's obligations to a Claimant under this Bond will arise after the following:
    5.1. Claimants who do not have a direct contract with the Contractor
        5.1.1. have furnished a written notice of non-payment to the Contractor, stating with substantial accuracy the amount claimed and the name of the party to whom the materials were, or equipment was, furnished or supplied or for whom the labor was done or performed, within ninety (90) days after having last performed labor or last furnished materials or equipment included in the Claim; and
        5.1.2. have sent a Claim to the Surety (at the address described in Paragraph 13).
    5.2. Claimants who are employed by or have a direct contract with the Contractor have sent a Claim to the Surety (at the address described in Paragraph 13).
6. If a notice of non-payment required by Paragraph 5.1.1 is given by the Owner to the Contractor, that is sufficient to satisfy a Claimant's obligation to furnish a written notice of non-payment under Paragraph 5.1.1.
7. When a Claimant has satisfied the conditions of Paragraph 5.1 or 5.2, whichever is applicable, the Surety shall promptly and at the Surety's expense take the following actions:
    7.1. Send an answer to the Claimant, with a copy to the Owner, within sixty (60) days after receipt of the Claim, stating the amounts that are undisputed and the basis for challenging any amounts that are disputed; and
    7.2. Pay or arrange for payment of any undisputed amounts.
    7.3. The Surety's failure to discharge its obligations under Paragraph 7.1 or 7.2 will not be deemed to constitute a waiver of defenses the Surety or Contractor may have or acquire as to a Claim, except as to undisputed amounts for which the Surety and Claimant have reached agreement. If, however, the Surety fails to discharge its obligations under Paragraph 7.1 or 7.2, the Surety shall indemnify the Claimant for the reasonable attorney's fees the Claimant incurs thereafter to recover any sums found to be due and owing to the Claimant.

8. The Surety's total obligation will not exceed the amount of this Bond, plus the amount of reasonable attorney's fees provided under Paragraph 7.3, and the amount of this Bond will be credited for any payments made in good faith by the Surety.
9. Amounts owed by the Owner to the Contractor under the Construction Contract will be used for the performance of the Construction Contract and to satisfy claims, if any, under any construction performance bond. By the Contractor furnishing and the Owner accepting this Bond, they agree that all funds earned by the Contractor in the performance of the Construction Contract are dedicated to satisfying obligations of the Contractor and Surety under this Bond, subject to the Owner's priority to use the funds for the completion of the work.
10. The Surety shall not be liable to the Owner, Claimants, or others for obligations of the Contractor that are unrelated to the Construction Contract. The Owner shall not be liable for the payment of any costs or expenses of any Claimant under this Bond, and shall have under this Bond no obligation to make payments to or give notice on behalf of Claimants, or otherwise have any obligations to Claimants under this Bond.
11. The Surety hereby waives notice of any change, including changes of time, to the Construction Contract or to related subcontracts, purchase orders, and other obligations.
12. No suit or action will be commenced by a Claimant under this Bond other than in a court of competent jurisdiction in the state in which the project that is the subject of the Construction Contract is located or after the expiration of one year from the date (1) on which the Claimant sent a Claim to the Surety pursuant to Paragraph 5.1.2 or 5.2, or (2) on which the last labor or service was performed by anyone or the last materials or equipment were furnished by anyone under the Construction Contract, whichever of (1) or (2) first occurs. If the provisions of this paragraph are void or prohibited by law, the minimum period of limitation available to sureties as a defense in the jurisdiction of the suit will be applicable.
13. Notice and Claims to the Surety, the Owner, or the Contractor must be mailed or delivered to the address shown on the page on which their signature appears. Actual receipt of notice or Claims, however accomplished, will be sufficient compliance as of the date received.
14. When this Bond has been furnished to comply with a statutory or other legal requirement in the location where the construction was to be performed, any provision in this Bond conflicting with said statutory or legal requirement will be deemed deleted here from and provisions conforming to such statutory or other legal requirement will be deemed incorporated herein. When so furnished, the intent is that this Bond will be construed as a statutory bond and not as a common law bond.
15. Upon requests by any person or entity appearing to be a potential beneficiary of this Bond, the Contractor and Owner shall promptly furnish a copy of this Bond or shall permit a copy to be made.
16. Definitions

    16.1. *Claim*—A written statement by the Claimant including at a minimum:

        16.1.1. The name of the Claimant;

        16.1.2. The name of the person for whom the labor was done, or materials or equipment furnished;

        16.1.3. A copy of the agreement or purchase order pursuant to which labor, materials, or equipment was furnished for use in the performance of the Construction Contract;

        16.1.4. A brief description of the labor, materials, or equipment furnished;

16.1.5. The date on which the Claimant last performed labor or last furnished materials or equipment for use in the performance of the Construction Contract;

16.1.6. The total amount earned by the Claimant for labor, materials, or equipment furnished as of the date of the Claim;

16.1.7. The total amount of previous payments received by the Claimant; and

16.1.8. The total amount due and unpaid to the Claimant for labor, materials, or equipment furnished as of the date of the Claim.

16.2. *Claimant*—An individual or entity having a direct contract with the Contractor or with a subcontractor of the Contractor to furnish labor, materials, or equipment for use in the performance of the Construction Contract. The term Claimant also includes any individual or entity that has rightfully asserted a claim under an applicable mechanic's lien or similar statute against the real property upon which the Project is located. The intent of this Bond is to include without limitation in the terms of "labor, materials, or equipment" that part of the water, gas, power, light, heat, oil, gasoline, telephone service, or rental equipment used in the Construction Contract, architectural and engineering services required for performance of the work of the Contractor and the Contractor's subcontractors, and all other items for which a mechanic's lien may be asserted in the jurisdiction where the labor, materials, or equipment were furnished.

16.3. *Construction Contract*—The agreement between the Owner and Contractor identified on the cover page, including all Contract Documents and all changes made to the agreement and the Contract Documents.

16.4. *Owner Default*—Failure of the Owner, which has not been remedied or waived, to pay the Contractor as required under the Construction Contract or to perform and complete or comply with the other material terms of the Construction Contract.

16.5. *Contract Documents*—All the documents that comprise the agreement between the Owner and Contractor.

17. If this Bond is issued for an agreement between a contractor and subcontractor, the term Contractor in this Bond will be deemed to be Subcontractor and the term Owner will be deemed to be Contractor.

18. Modifications to this Bond are as follows: **None**

REQUIRED CONTRACT PROVISIONS
FEDERAL-AID CONSTRUCTION CONTRACTS

I. General
II. Nondiscrimination
III. Non-segregated Facilities
IV. Davis-Bacon and Related Act Provisions
V. Contract Work Hours and Safety Standards Act Provisions
VI. Subletting or Assigning the Contract
VII. Safety: Accident Prevention
VIII. False Statements Concerning Highway Projects
IX. Implementation of Clean Air Act and Federal Water Pollution Control Act
X. Certification Regarding Debarment, Suspension, Ineligibility and Voluntary Exclusion
XI. Certification Regarding Use of Contract Funds for Lobbying
XII. Use of United States-Flag Vessels:

ATTACHMENTS

A. Employment and Materials Preference for Appalachian Development Highway System or Appalachian Local Access Road Contracts (included in Appalachian contracts only)

I. GENERAL

1. Form FHWA-1273 must be physically incorporated in each construction contract funded under title 23, United States Code, as required in 23 CFR 633.102(b) (excluding emergency contracts solely intended for debris removal). The contractor (or subcontractor) must insert this form in each subcontract and further require its inclusion in all lower tier subcontracts (excluding purchase orders, rental agreements and other agreements for supplies or services). 23 CFR 633.102(e).

The applicable requirements of Form FHWA-1273 are incorporated by reference for work done under any purchase order, rental agreement or agreement for other services. The prime contractor shall be responsible for compliance by any subcontractor, lower-tier subcontractor or service provider. 23 CFR 633.102(e).

Form FHWA-1273 must be included in all Federal-aid design-build contracts, in all subcontracts and in lower tier subcontracts (excluding subcontracts for design services, purchase orders, rental agreements and other agreements for supplies or services) in accordance with 23 CFR 633.102. The design-builder shall be responsible for compliance by any subcontractor, lower-tier subcontractor or service provider.

Contracting agencies may reference Form FHWA-1273 in solicitation-for-bids or request-for-proposals documents, however, the Form FHWA-1273 must be physically incorporated (not referenced) in all contracts, subcontracts and lower-tier subcontracts (excluding purchase orders, rental agreements and other agreements for supplies or services related to a construction contract). 23 CFR 633.102(b).

2. Subject to the applicability criteria noted in the following sections, these contract provisions shall apply to all work performed on the contract by the contractor's own organization and with the assistance of workers under the contractor's immediate superintendence and to all work performed on the contract by piecework, station work, or by subcontract. 23 CFR 633.102(d).

3. A breach of any of the stipulations contained in these Required Contract Provisions may be sufficient grounds for withholding of progress payments, withholding of final payment, termination of the contract, suspension / debarment or any other action determined to be appropriate by the contracting agency and FHWA.

4. Selection of Labor: During the performance of this contract, the contractor shall not use convict labor for any purpose within the limits of a construction project on a Federal-aid highway unless it is labor performed by convicts who are on parole, supervised release, or probation. 23 U.S.C. 114(b). The term Federal-aid highway does not include roadways functionally classified as local roads or rural minor collectors. 23 U.S.C. 101(a).

II. NONDISCRIMINATION (23 CFR 230.107(a); 23 CFR Part 230, Subpart A, Appendix A; EO 11246)

The provisions of this section related to 23 CFR Part 230, Subpart A, Appendix A are applicable to all Federal-aid construction contracts and to all related construction subcontracts of $10,000 or more. The provisions of 23 CFR Part 230 are not applicable to material supply, engineering, or architectural service contracts.

In addition, the contractor and all subcontractors must comply with the following policies: Executive Order 11246, 41 CFR Part 60, 29 CFR Parts 1625-1627, 23 U.S.C. 140, Section 504 of the Rehabilitation Act of 1973, as amended (29 U.S.C. 794), Title VI of the Civil Rights Act of 1964, as amended (42 U.S.C. 2000d et seq.), and related regulations including 49 CFR Parts 21, 26, and 27; and 23 CFR Parts 200, 230, and 633.

The contractor and all subcontractors must comply with: the requirements of the Equal Opportunity Clause in 41 CFR 60-1.4(b) and, for all construction contracts exceeding $10,000, the Standard Federal Equal Employment Opportunity Construction Contract Specifications in 41 CFR 60-4.3.

Note: The U.S. Department of Labor has exclusive authority to determine compliance with Executive Order 11246 and the policies of the Secretary of Labor including 41 CFR Part 60, and 29 CFR Parts 1625-1627. The contracting agency and the FHWA have the authority and the responsibility to ensure compliance with 23 U.S.C. 140, Section 504 of the Rehabilitation Act of 1973, as amended (29 U.S.C. 794), and Title VI of the Civil Rights Act of 1964, as amended (42 U.S.C. 2000d et seq.), and related regulations including 49 CFR Parts 21, 26, and 27; and 23 CFR Parts 200, 230, and 633.

The following provision is adopted from 23 CFR Part 230, Subpart A, Appendix A, with appropriate revisions to conform to the U.S. Department of Labor (US DOL) and FHWA requirements.

1. Equal Employment Opportunity: Equal Employment Opportunity (EEO) requirements not to discriminate and to take affirmative action to assure equal opportunity as set forth under laws, executive orders, rules, regulations (*see* 28 CFR Part 35, 29 CFR Part 1630, 29 CFR Parts 1625-1627, 41 CFR Part 60 and 49 CFR Part 27) and orders of the Secretary of Labor as modified by the provisions prescribed herein, and imposed pursuant to 23 U.S.C. 140, shall constitute the EEO and specific affirmative action standards for the contractor's project activities under this contract. The provisions of the Americans with Disabilities Act of 1990 (42 U.S.C. 12101 et seq.) set forth under 28 CFR Part 35 and 29 CFR Part 1630 are incorporated by reference in this contract. In the execution of this contract, the contractor agrees to comply with the following minimum specific requirement activities of EEO:

a. The contractor will work with the contracting agency and the Federal Government to ensure that it has made every good faith effort to provide equal opportunity with respect to all of its terms and conditions of employment and in their review of activities under the contract. 23 CFR 230.409 (g)(4) & (5).

b. The contractor will accept as its operating policy the following statement:

"It is the policy of this Company to assure that applicants are employed, and that employees are treated during employment, without regard to their race, religion, sex, sexual orientation, gender identity, color, national origin, age or disability. Such action shall include: employment, upgrading, demotion, or transfer; recruitment or recruitment advertising; layoff or termination; rates of pay or other forms of compensation; and selection for training, including apprenticeship, pre-apprenticeship, and/or on-the-job training."

2. EEO Officer: The contractor will designate and make known to the contracting officers an EEO Officer who will have the responsibility for and must be capable of effectively administering and promoting an active EEO program and who must be assigned adequate authority and responsibility to do so.

3. Dissemination of Policy: All members of the contractor's staff who are authorized to hire, supervise, promote, and discharge employees, or who recommend such action or are substantially involved in such action, will be made fully cognizant of and will implement the contractor's EEO policy and contractual responsibilities to provide EEO in each grade and classification of employment. To ensure that the above agreement will be met, the following actions will be taken as a minimum:

a. Periodic meetings of supervisory and personnel office employees will be conducted before the start of work and then not less often than once every six months, at which time the contractor's EEO policy and its implementation will be reviewed and explained. The meetings will be conducted by the EEO Officer or other knowledgeable company official.

b. All new supervisory or personnel office employees will be given a thorough indoctrination by the EEO Officer, covering all major aspects of the contractor's EEO obligations within thirty days following their reporting for duty with the contractor.

c. All personnel who are engaged in direct recruitment for the project will be instructed by the EEO Officer in the contractor's procedures for locating and hiring minorities and women.

d. Notices and posters setting forth the contractor's EEO policy will be placed in areas readily accessible to employees, applicants for employment and potential employees.

e. The contractor's EEO policy and the procedures to implement such policy will be brought to the attention of employees by means of meetings, employee handbooks, or other appropriate means.

4. Recruitment: When advertising for employees, the contractor will include in all advertisements for employees the notation: "An Equal Opportunity Employer." All such advertisements will be placed in publications having a large circulation among minorities and women in the area from which the project work force would normally be derived.

a. The contractor will, unless precluded by a valid bargaining agreement, conduct systematic and direct recruitment through public and private employee referral sources likely to yield qualified minorities and women. To meet this requirement, the contractor will identify sources of potential minority group employees and establish with such identified sources procedures whereby minority and women applicants may be referred to the contractor for employment consideration.

b. In the event the contractor has a valid bargaining agreement providing for exclusive hiring hall referrals, the contractor is expected to observe the provisions of that agreement to the extent that the system meets the contractor's compliance with EEO contract provisions. Where implementation of such an agreement has the effect of discriminating against minorities or women, or obligates the contractor to do the same, such implementation violates Federal nondiscrimination provisions.

c. The contractor will encourage its present employees to refer minorities and women as applicants for employment. Information and procedures with regard to referring such applicants will be discussed with employees.

5. Personnel Actions: Wages, working conditions, and employee benefits shall be established and administered, and personnel actions of every type, including hiring, upgrading, promotion, transfer, demotion, layoff, and termination, shall be taken without regard to race, color, religion, sex, sexual orientation, gender identity, national origin, age or disability. The following procedures shall be followed:

a. The contractor will conduct periodic inspections of project sites to ensure that working conditions and employee facilities do not indicate discriminatory treatment of project site personnel.

b. The contractor will periodically evaluate the spread of wages paid within each classification to determine any evidence of discriminatory wage practices.

c. The contractor will periodically review selected personnel actions in depth to determine whether there is evidence of discrimination. Where evidence is found, the contractor will promptly take corrective action. If the review indicates that the discrimination may extend beyond the actions reviewed, such corrective action shall include all affected persons.

d. The contractor will promptly investigate all complaints of alleged discrimination made to the contractor in connection with its obligations under this contract, will attempt to resolve such complaints, and will take appropriate corrective action

within a reasonable time. If the investigation indicates that the discrimination may affect persons other than the complainant, such corrective action shall include such other persons. Upon completion of each investigation, the contractor will inform every complainant of all of their avenues of appeal.

6. Training and Promotion:

a. The contractor will assist in locating, qualifying, and increasing the skills of minorities and women who are applicants for employment or current employees. Such efforts should be aimed at developing full journey level status employees in the type of trade or job classification involved.

b. Consistent with the contractor's work force requirements and as permissible under Federal and State regulations, the contractor shall make full use of training programs (i.e., apprenticeship and on-the-job training programs for the geographical area of contract performance). In the event a special provision for training is provided under this contract, this subparagraph will be superseded as indicated in the special provision. The contracting agency may reserve training positions for persons who receive welfare assistance in accordance with 23 U.S.C. 140(a).

c. The contractor will advise employees and applicants for employment of available training programs and entrance requirements for each.

d. The contractor will periodically review the training and promotion potential of employees who are minorities and women and will encourage eligible employees to apply for such training and promotion.

7. Unions: If the contractor relies in whole or in part upon unions as a source of employees, the contractor will use good faith efforts to obtain the cooperation of such unions to increase opportunities for minorities and women. 23 CFR 230.409. Actions by the contractor, either directly or through a contractor's association acting as agent, will include the procedures set forth below:

a. The contractor will use good faith efforts to develop, in cooperation with the unions, joint training programs aimed toward qualifying more minorities and women for membership in the unions and increasing the skills of minorities and women so that they may qualify for higher paying employment.

b. The contractor will use good faith efforts to incorporate an EEO clause into each union agreement to the end that such union will be contractually bound to refer applicants without regard to their race, color, religion, sex, sexual orientation, gender identity, national origin, age, or disability.

c. The contractor is to obtain information as to the referral practices and policies of the labor union except that to the extent such information is within the exclusive possession of the labor union and such labor union refuses to furnish such information to the contractor, the contractor shall so certify to the contracting agency and shall set forth what efforts have been made to obtain such information.

d. In the event the union is unable to provide the contractor with a reasonable flow of referrals within the time limit set forth in the collective bargaining agreement, the contractor will, through independent recruitment efforts, fill the employment vacancies without regard to race, color, religion, sex, sexual orientation, gender identity, national origin, age, or disability; making full efforts to obtain qualified and/or qualifiable minorities and women. The failure of a union to provide sufficient referrals (even though it is obligated to provide exclusive referrals under the terms of a collective bargaining agreement) does not relieve the contractor from the requirements of this paragraph. In the event the union referral practice prevents the contractor from meeting the obligations pursuant to Executive Order 11246, as amended, and these special provisions, such contractor shall immediately notify the contracting agency.

8. Reasonable Accommodation for Applicants / Employees with Disabilities: The contractor must be familiar with the requirements for and comply with the Americans with Disabilities Act and all rules and regulations established thereunder. Employers must provide reasonable accommodation in all employment activities unless to do so would cause an undue hardship.

9. Selection of Subcontractors, Procurement of Materials and Leasing of Equipment: The contractor shall not discriminate on the grounds of race, color, religion, sex, sexual orientation, gender identity, national origin, age, or disability in the selection and retention of subcontractors, including procurement of materials and leases of equipment. The contractor shall take all necessary and reasonable steps to ensure nondiscrimination in the administration of this contract.

a. The contractor shall notify all potential subcontractors, suppliers, and lessors of their EEO obligations under this contract.

b. The contractor will use good faith efforts to ensure subcontractor compliance with their EEO obligations.

10. Assurances Required:

a. The requirements of 49 CFR Part 26 and the State DOT's FHWA-approved Disadvantaged Business Enterprise (DBE) program are incorporated by reference.

b. The contractor, subrecipient or subcontractor shall not discriminate on the basis of race, color, national origin, or sex in the performance of this contract. The contractor shall carry out applicable requirements of 49 CFR part 26 in the award and administration of DOT-assisted contracts. Failure by the contractor to carry out these requirements is a material breach of this contract, which may result in the termination of this contract or such other remedy as the recipient deems appropriate, which may include, but is not limited to:
(1) Withholding monthly progress payments;
(2) Assessing sanctions;
(3) Liquidated damages; and/or
(4) Disqualifying the contractor from future bidding as non-responsible.

c. The Title VI and nondiscrimination provisions of U.S. DOT Order 1050.2A at Appendixes A and E are incorporated by reference. 49 CFR Part 21.

11. Records and Reports: The contractor shall keep such records as necessary to document compliance with the EEO requirements. Such records shall be retained for a period of three years following the date of the final payment to the contractor for all contract work and shall be available at reasonable times and places for inspection by authorized representatives of the contracting agency and the FHWA.

a. The records kept by the contractor shall document the following:

(1) The number and work hours of minority and non-minority group members and women employed in each work classification on the project;

(2) The progress and efforts being made in cooperation with unions, when applicable, to increase employment opportunities for minorities and women; and

(3) The progress and efforts being made in locating, hiring, training, qualifying, and upgrading minorities and women.

b. The contractors and subcontractors will submit an annual report to the contracting agency each July for the duration of the project indicating the number of minority, women, and non-minority group employees currently engaged in each work classification required by the contract work. This information is to be reported on Form FHWA-1391. The staffing data should represent the project work force on board in all or any part of the last payroll period preceding the end of July. If on-the-job training is being required by special provision, the contractor will be required to collect and report training data. The employment data should reflect the work force on board during all or any part of the last payroll period preceding the end of July.

III. NONSEGREGATED FACILITIES

This provision is applicable to all Federal-aid construction contracts and to all related construction subcontracts of more than $10,000. 41 CFR 60-1.5.

As prescribed by 41 CFR 60-1.8, the contractor must ensure that facilities provided for employees are provided in such a manner that segregation on the basis of race, color, religion, sex, sexual orientation, gender identity, or national origin cannot result. The contractor may neither require such segregated use by written or oral policies nor tolerate such use by employee custom. The contractor's obligation extends further to ensure that its employees are not assigned to perform their services at any location under the contractor's control where the facilities are segregated. The term "facilities" includes waiting rooms, work areas, restaurants and other eating areas, time clocks, restrooms, washrooms, locker rooms and other storage or dressing areas, parking lots, drinking fountains, recreation or entertainment areas, transportation, and housing provided for employees. The contractor shall provide separate or single-user restrooms and necessary dressing or sleeping areas to assure privacy between sexes.

IV. DAVIS-BACON AND RELATED ACT PROVISIONS

This section is applicable to all Federal-aid construction projects exceeding $2,000 and to all related subcontracts and lower-tier subcontracts (regardless of subcontract size), in accordance with 29 CFR 5.5. The requirements apply to all projects located within the right-of-way of a roadway that is functionally classified as Federal-aid highway. 23 U.S.C. 113. This excludes roadways functionally classified as local roads or rural minor collectors, which are exempt. 23 U.S.C. 101. Where applicable law requires that projects be treated as a project on a Federal-aid highway, the provisions of this subpart will apply regardless of the location of the project. Examples include: Surface Transportation Block Grant Program projects funded under 23 U.S.C. 133 [excluding recreational trails projects], the Nationally Significant Freight and Highway Projects funded under 23 U.S.C. 117, and National Highway Freight Program projects funded under 23 U.S.C. 167.

The following provisions are from the U.S. Department of Labor regulations in 29 CFR 5.5 “Contract provisions and related matters” with minor revisions to conform to the FHWA-1273 format and FHWA program requirements.

1. Minimum wages (29 CFR 5.5)

a. *Wage rates and fringe benefits.* All laborers and mechanics employed or working upon the site of the work (or otherwise working in construction or development of the project under a development statute), will be paid unconditionally and not less often than once a week, and without subsequent deduction or rebate on any account (except such payroll deductions as are permitted by regulations issued by the Secretary of Labor under the Copeland Act (29 CFR part 3)), the full amount of basic hourly wages and bona fide fringe benefits (or cash equivalents thereof) due at time of payment computed at rates not less than those contained in the wage determination of the Secretary of Labor which is attached hereto and made a part hereof, regardless of any contractual relationship which may be alleged to exist between the contractor and such laborers and mechanics. As provided in paragraphs (d) and (e) of 29 CFR 5.5, the appropriate wage determinations are effective by operation of law even if they have not been attached to the contract. Contributions made or costs reasonably anticipated for bona fide fringe benefits under the Davis-Bacon Act (40 U.S.C. 3141(2)(B)) on behalf of laborers or mechanics are considered wages paid to such laborers or mechanics, subject to the provisions of paragraph 1.e. of this section; also, regular contributions made or costs incurred for more than a weekly period (but not less often than quarterly) under plans, funds, or programs which cover the particular weekly period, are deemed to be constructively made or incurred during such weekly period. Such laborers and mechanics must be paid the appropriate wage rate and fringe benefits on the wage determination for the classification(s) of work actually performed, without regard to skill, except as provided in paragraph 4. of this section. Laborers or mechanics performing work in more than one classification may be compensated at the rate specified for each classification for the time actually worked therein: *Provided,* That the employer's payroll records accurately set forth the time spent in each classification in which work is performed. The wage determination (including any additional classifications and wage rates conformed under paragraph 1.c. of this section) and the Davis-Bacon poster (WH–1321) must be posted at all times by the contractor and its subcontractors at the site of the work in a prominent and accessible place where it can be easily seen by the workers.

b. *Frequently recurring classifications.* (1) In addition to wage and fringe benefit rates that have been determined to be prevailing under the procedures set forth in 29 CFR part 1, a wage determination may contain, pursuant to § 1.3(f), wage and fringe benefit rates for classifications of laborers and mechanics for which conformance requests are regularly submitted pursuant to paragraph 1.c. of this section, provided that:

(i) The work performed by the classification is not performed by a classification in the wage determination for which a prevailing wage rate has been determined;

(ii) The classification is used in the area by the construction industry; and

(iii) The wage rate for the classification bears a reasonable relationship to the prevailing wage rates contained in the wage determination.

(2) The Administrator will establish wage rates for such classifications in accordance with paragraph 1.c.(1)(iii) of this section. Work performed in such a classification must be paid at no less than the wage and fringe benefit rate listed on the wage determination for such classification.

c. *Conformance.* (1) The contracting officer must require that any class of laborers or mechanics, including helpers, which is not listed in the wage determination and which is to be employed under the contract be classified in conformance with the wage determination. Conformance of an additional classification and wage rate and fringe benefits is appropriate only when the following criteria have been met:

(i) The work to be performed by the classification requested is not performed by a classification in the wage determination; and

(ii) The classification is used in the area by the construction industry; and

(iii) The proposed wage rate, including any bona fide fringe benefits, bears a reasonable relationship to the wage rates contained in the wage determination.

(2) The conformance process may not be used to split, subdivide, or otherwise avoid application of classifications listed in the wage determination.

(3) If the contractor and the laborers and mechanics to be employed in the classification (if known), or their representatives, and the contracting officer agree on the classification and wage rate (including the amount designated for fringe benefits where appropriate), a report of the action taken will be sent by the contracting officer by email to DBAconformance@dol.gov. The Administrator, or an authorized representative, will approve, modify, or disapprove every additional classification action within 30 days of receipt and so advise the contracting officer or will notify the contracting officer within the 30–day period that additional time is necessary.

(4) In the event the contractor, the laborers or mechanics to be employed in the classification or their representatives, and the contracting officer do not agree on the proposed classification and wage rate (including the amount designated for fringe benefits, where appropriate), the contracting officer will, by email to DBAconformance@dol.gov, refer the questions, including the views of all interested parties and the recommendation of the contracting officer, to the Administrator for determination. The Administrator, or an authorized representative, will issue a determination within 30 days of receipt and so advise the contracting officer or will notify the contracting officer within the 30–day period that additional time is necessary.

(5) The contracting officer must promptly notify the contractor of the action taken by the Wage and Hour Division under paragraphs 1.c.(3) and (4) of this section. The contractor must furnish a written copy of such determination to each affected worker or it must be posted as a part of the wage determination. The wage rate (including fringe benefits where appropriate) determined pursuant to paragraph 1.c.(3) or (4) of this section must be paid to all workers performing work in the classification under this contract from the first day on which work is performed in the classification.

d. *Fringe benefits not expressed as an hourly rate.* Whenever the minimum wage rate prescribed in the contract for a class of laborers or mechanics includes a fringe benefit which is not expressed as an hourly rate, the contractor may either pay the benefit as stated in the wage determination or may pay another bona fide fringe benefit or an hourly cash equivalent thereof.

e. *Unfunded plans.* If the contractor does not make payments to a trustee or other third person, the contractor may consider as part of the wages of any laborer or mechanic the amount of any costs reasonably anticipated in providing bona fide fringe benefits under a plan or program, *Provided,* That the Secretary of Labor has found, upon the written request of the contractor, in accordance with the criteria set forth in § 5.28, that the applicable standards of the Davis-Bacon Act have been met. The Secretary of Labor may require the contractor to set aside in a separate account assets for the meeting of obligations under the plan or program.

f. *Interest.* In the event of a failure to pay all or part of the wages required by the contract, the contractor will be required to pay interest on any underpayment of wages.

2. Withholding (29 CFR 5.5)

a. *Withholding requirements.* The contracting agency may, upon its own action, or must, upon written request of an authorized representative of the Department of Labor, withhold or cause to be withheld from the contractor so much of the accrued payments or advances as may be considered necessary to satisfy the liabilities of the prime contractor or any subcontractor for the full amount of wages and monetary relief, including interest, required by the clauses set forth in this section for violations of this contract, or to satisfy any such liabilities required by any other Federal contract, or federally assisted contract subject to Davis-Bacon labor standards, that is held by the same prime contractor (as defined in § 5.2). The necessary funds may be withheld from the contractor under this contract, any other Federal contract with the same prime contractor, or any other federally assisted contract that is subject to Davis-Bacon labor standards requirements and is held by the same prime contractor, regardless of whether the other contract was awarded or assisted by the same agency, and such funds may be used to satisfy the contractor liability for which the funds were withheld. In the event of a contractor's failure to pay any laborer or mechanic, including any apprentice or helper working on the site of the work all or part of the wages required by the contract, or upon the contractor's failure to submit the required records as discussed in paragraph 3.d. of this section, the contracting agency may on its own initiative and after written notice to the contractor, take such action as may be necessary to cause the suspension of any further payment, advance, or guarantee of funds until such violations have ceased.

b. *Priority to withheld funds.* The Department has priority to funds withheld or to be withheld in accordance with paragraph

2.a. of this section or Section V, paragraph 3.a., or both, over claims to those funds by:

(1) A contractor's surety(ies), including without limitation performance bond sureties and payment bond sureties;

(2) A contracting agency for its reprocurement costs;

(3) A trustee(s) (either a court-appointed trustee or a U.S. trustee, or both) in bankruptcy of a contractor, or a contractor's bankruptcy estate;

(4) A contractor's assignee(s);

(5) A contractor's successor(s); or

(6) A claim asserted under the Prompt Payment Act, 31 U.S.C. 3901–3907.

3. Records and certified payrolls (29 CFR 5.5)

a. *Basic record requirements* (1) *Length of record retention.* All regular payrolls and other basic records must be maintained by the contractor and any subcontractor during the course of the work and preserved for all laborers and mechanics working at the site of the work (or otherwise working in construction or development of the project under a development statute) for a period of at least 3 years after all the work on the prime contract is completed.

(2) *Information required.* Such records must contain the name; Social Security number; last known address, telephone number, and email address of each such worker; each worker's correct classification(s) of work actually performed; hourly rates of wages paid (including rates of contributions or costs anticipated for bona fide fringe benefits or cash equivalents thereof of the types described in 40 U.S.C. 3141(2)(B) of the Davis-Bacon Act); daily and weekly number of hours actually worked in total and on each covered contract; deductions made; and actual wages paid.

(3) *Additional records relating to fringe benefits.* Whenever the Secretary of Labor has found under paragraph 1.e. of this section that the wages of any laborer or mechanic include the amount of any costs reasonably anticipated in providing benefits under a plan or program described in 40 U.S.C. 3141(2)(B) of the Davis-Bacon Act, the contractor must maintain records which show that the commitment to provide such benefits is enforceable, that the plan or program is financially responsible, and that the plan or program has been communicated in writing to the laborers or mechanics affected, and records which show the costs anticipated or the actual cost incurred in providing such benefits.

(4) *Additional records relating to apprenticeship.* Contractors with apprentices working under approved programs must maintain written evidence of the registration of apprenticeship programs, the registration of the apprentices, and the ratios and wage rates prescribed in the applicable programs.

b. *Certified payroll requirements* (1) *Frequency and method of submission.* The contractor or subcontractor must submit weekly, for each week in which any DBA- or Related Acts-covered work is performed, certified payrolls to the contracting agency. The prime contractor is responsible for the submission of all certified payrolls by all subcontractors. A contracting agency or prime contractor may permit or require contractors to submit certified payrolls through an electronic system, as long as the electronic system requires a legally valid electronic signature; the system allows the contractor, the contracting agency, and the Department of Labor to access the certified payrolls upon request for at least 3 years after the work on the prime contract has been completed; and the contracting agency or prime contractor permits other methods of submission in situations where the contractor is unable or limited in its ability to use or access the electronic system.

(2) *Information required.* The certified payrolls submitted must set out accurately and completely all of the information required to be maintained under paragraph 3.a.(2) of this section, except that full Social Security numbers and last known addresses, telephone numbers, and email addresses must not be included on weekly transmittals. Instead, the certified payrolls need only include an individually identifying number for each worker (*e.g.,* the last four digits of the worker's Social Security number). The required weekly certified payroll information may be submitted using Optional Form WH–347 or in any other format desired. Optional Form WH–347 is available for this purpose from the Wage and Hour Division website at *https://www.dol.gov/sites/dolgov/files/WHD/legacy/files/wh347/.pdf* or its successor website. It is not a violation of this section for a prime contractor to require a subcontractor to provide full Social Security numbers and last known addresses, telephone numbers, and email addresses to the prime contractor for its own records, without weekly submission by the subcontractor to the contracting agency.

(3) *Statement of Compliance.* Each certified payroll submitted must be accompanied by a “Statement of Compliance,” signed by the contractor or subcontractor, or the contractor's or subcontractor's agent who pays or supervises the payment of the persons working on the contract, and must certify the following:

(i) That the certified payroll for the payroll period contains the information required to be provided under paragraph 3.b. of this section, the appropriate information and basic records are being maintained under paragraph 3.a. of this section, and such information and records are correct and complete;

(ii) That each laborer or mechanic (including each helper and apprentice) working on the contract during the payroll period has been paid the full weekly wages earned, without rebate, either directly or indirectly, and that no deductions have been made either directly or indirectly from the full wages earned, other than permissible deductions as set forth in 29 CFR part 3; and

(iii) That each laborer or mechanic has been paid not less than the applicable wage rates and fringe benefits or cash equivalents for the classification(s) of work actually performed, as specified in the applicable wage determination incorporated into the contract.

(4) *Use of Optional Form WH–347.* The weekly submission of a properly executed certification set forth on the reverse side of Optional Form WH–347 will satisfy the requirement for submission of the “Statement of Compliance” required by paragraph 3.b.(3) of this section.

(5) *Signature.* The signature by the contractor, subcontractor, or the contractor's or subcontractor's agent must be an original handwritten signature or a legally valid electronic signature.

(6) *Falsification.* The falsification of any of the above certifications may subject the contractor or subcontractor to civil or criminal prosecution under 18 U.S.C. 1001 and 31 U.S.C. 3729.

(7) *Length of certified payroll retention.* The contractor or subcontractor must preserve all certified payrolls during the course of the work and for a period of 3 years after all the work on the prime contract is completed.

c. *Contracts, subcontracts, and related documents.* The contractor or subcontractor must maintain this contract or subcontract and related documents including, without limitation, bids, proposals, amendments, modifications, and extensions. The contractor or subcontractor must preserve these contracts, subcontracts, and related documents during the course of the work and for a period of 3 years after all the work on the prime contract is completed.

d. *Required disclosures and access* (1) *Required record disclosures and access to workers.* The contractor or subcontractor must make the records required under paragraphs 3.a. through 3.c. of this section, and any other documents that the contracting agency, the State DOT, the FHWA, or the Department of Labor deems necessary to determine compliance with the labor standards provisions of any of the applicable statutes referenced by § 5.1, available for inspection, copying, or transcription by authorized representatives of the contracting agency, the State DOT, the FHWA, or the Department of Labor, and must permit such representatives to interview workers during working hours on the job.

(2) *Sanctions for non-compliance with records and worker access requirements.* If the contractor or subcontractor fails to submit the required records or to make them available, or refuses to permit worker interviews during working hours on the job, the Federal agency may, after written notice to the contractor, sponsor, applicant, owner, or other entity, as the case may be, that maintains such records or that employs such workers, take such action as may be necessary to cause the suspension of any further payment, advance, or guarantee of funds. Furthermore, failure to submit the required records upon request or to make such records available, or to permit worker interviews during working hours on the job, may be grounds for debarment action pursuant to § 5.12. In addition, any contractor or other person that fails to submit the required records or make those records available to WHD within the time WHD requests that the records be produced will be precluded from introducing as evidence in an administrative proceeding under 29 CFR part 6 any of the required records that were not provided or made available to WHD. WHD will take into consideration a reasonable request from the contractor or person for an extension of the time for submission of records. WHD will determine the reasonableness of the request and may consider, among other things, the location of the records and the volume of production.

(3) *Required information disclosures.* Contractors and subcontractors must maintain the full Social Security number and last known address, telephone number, and email address of each covered worker, and must provide them upon request to the contracting agency, the State DOT, the FHWA, the contractor, or the Wage and Hour Division of the Department of Labor for purposes of an investigation or other compliance action.

4. Apprentices and equal employment opportunity (29 CFR 5.5)

a. *Apprentices* (1) *Rate of pay.* Apprentices will be permitted to work at less than the predetermined rate for the work they perform when they are employed pursuant to and individually registered in a bona fide apprenticeship program registered with the U.S. Department of Labor, Employment and Training Administration, Office of Apprenticeship (OA), or with a State Apprenticeship Agency recognized by the OA. A person who is not individually registered in the program, but who has been certified by the OA or a State Apprenticeship Agency (where appropriate) to be eligible for probationary employment as an apprentice, will be permitted to work at less than the predetermined rate for the work they perform in the first 90 days of probationary employment as an apprentice in such a program. In the event the OA or a State Apprenticeship Agency recognized by the OA withdraws approval of an apprenticeship program, the contractor will no longer be permitted to use apprentices at less than the applicable predetermined rate for the work performed until an acceptable program is approved.

(2) *Fringe benefits.* Apprentices must be paid fringe benefits in accordance with the provisions of the apprenticeship program. If the apprenticeship program does not specify fringe benefits, apprentices must be paid the full amount of fringe benefits listed on the wage determination for the applicable classification. If the Administrator determines that a different practice prevails for the applicable apprentice classification, fringe benefits must be paid in accordance with that determination.

(3) *Apprenticeship ratio.* The allowable ratio of apprentices to journeyworkers on the job site in any craft classification must not be greater than the ratio permitted to the contractor as to the entire work force under the registered program or the ratio applicable to the locality of the project pursuant to paragraph 4.a.(4) of this section. Any worker listed on a payroll at an apprentice wage rate, who is not registered or otherwise employed as stated in paragraph 4.a.(1) of this section, must be paid not less than the applicable wage rate on the wage determination for the classification of work actually performed. In addition, any apprentice performing work on the job site in excess of the ratio permitted under this section must be paid not less than the applicable wage rate on the wage determination for the work actually performed.

(4) *Reciprocity of ratios and wage rates.* Where a contractor is performing construction on a project in a locality other than the locality in which its program is registered, the ratios and wage rates (expressed in percentages of the journeyworker's hourly rate) applicable within the locality in which the construction is being performed must be observed. If there is no applicable ratio or wage rate for the locality of the project, the ratio and wage rate specified in the contractor's registered program must be observed.

b. *Equal employment opportunity.* The use of apprentices and journeyworkers under this part must be in conformity with

the equal employment opportunity requirements of Executive Order 11246, as amended, and 29 CFR part 30.

c. Apprentices and Trainees (programs of the U.S. DOT).

Apprentices and trainees working under apprenticeship and skill training programs which have been certified by the Secretary of Transportation as promoting EEO in connection with Federal-aid highway construction programs are not subject to the requirements of paragraph 4 of this Section IV. 23 CFR 230.111(e)(2). The straight time hourly wage rates for apprentices and trainees under such programs will be established by the particular programs. The ratio of apprentices and trainees to journeyworkers shall not be greater than permitted by the terms of the particular program.

5. Compliance with Copeland Act requirements. The contractor shall comply with the requirements of 29 CFR part 3, which are incorporated by reference in this contract as provided in 29 CFR 5.5.

6. Subcontracts. The contractor or subcontractor must insert FHWA-1273 in any subcontracts, along with the applicable wage determination(s) and such other clauses or contract modifications as the contracting agency may by appropriate instructions require, and a clause requiring the subcontractors to include these clauses and wage determination(s) in any lower tier subcontracts. The prime contractor is responsible for the compliance by any subcontractor or lower tier subcontractor with all the contract clauses in this section. In the event of any violations of these clauses, the prime contractor and any subcontractor(s) responsible will be liable for any unpaid wages and monetary relief, including interest from the date of the underpayment or loss, due to any workers of lower-tier subcontractors, and may be subject to debarment, as appropriate. 29 CFR 5.5.

7. Contract termination: debarment. A breach of the contract clauses in 29 CFR 5.5 may be grounds for termination of the contract, and for debarment as a contractor and a subcontractor as provided in 29 CFR 5.12.

8. Compliance with Davis-Bacon and Related Act requirements. All rulings and interpretations of the Davis-Bacon and Related Acts contained in 29 CFR parts 1, 3, and 5 are herein incorporated by reference in this contract as provided in 29 CFR 5.5.

9. Disputes concerning labor standards. As provided in 29 CFR 5.5, disputes arising out of the labor standards provisions of this contract shall not be subject to the general disputes clause of this contract. Such disputes shall be resolved in accordance with the procedures of the Department of Labor set forth in 29 CFR parts 5, 6, and 7. Disputes within the meaning of this clause include disputes between the contractor (or any of its subcontractors) and the contracting agency, the U.S. Department of Labor, or the employees or their representatives.

10. Certification of eligibility. a. By entering into this contract, the contractor certifies that neither it nor any person or firm who has an interest in the contractor's firm is a person or firm ineligible to be awarded Government contracts by virtue of 40 U.S.C. 3144(b) or § 5.12(a).

b. No part of this contract shall be subcontracted to any person or firm ineligible for award of a Government contract by virtue of 40 U.S.C. 3144(b) or § 5.12(a).

c. The penalty for making false statements is prescribed in the U.S. Code, Title 18 Crimes and Criminal Procedure, 18 U.S.C. 1001.

11. Anti-retaliation. It is unlawful for any person to discharge, demote, intimidate, threaten, restrain, coerce, blacklist, harass, or in any other manner discriminate against, or to cause any person to discharge, demote, intimidate, threaten, restrain, coerce, blacklist, harass, or in any other manner discriminate against, any worker or job applicant for:

a. Notifying any contractor of any conduct which the worker reasonably believes constitutes a violation of the DBA, Related Acts, this part, or 29 CFR part 1 or 3;

b. Filing any complaint, initiating or causing to be initiated any proceeding, or otherwise asserting or seeking to assert on behalf of themselves or others any right or protection under the DBA, Related Acts, this part, or 29 CFR part 1 or 3;

c. Cooperating in any investigation or other compliance action, or testifying in any proceeding under the DBA, Related Acts, this part, or 29 CFR part 1 or 3; or

d. Informing any other person about their rights under the DBA, Related Acts, this part, or 29 CFR part 1 or 3.

V. CONTRACT WORK HOURS AND SAFETY STANDARDS ACT

Pursuant to 29 CFR 5.5(b), the following clauses apply to any Federal-aid construction contract in an amount in excess of $100,000 and subject to the overtime provisions of the Contract Work Hours and Safety Standards Act. These clauses shall be inserted in addition to the clauses required by 29 CFR 5.5(a) or 29 CFR 4.6. As used in this paragraph, the terms laborers and mechanics include watchpersons and guards.

1. Overtime requirements. No contractor or subcontractor contracting for any part of the contract work which may require or involve the employment of laborers or mechanics shall require or permit any such laborer or mechanic in any workweek in which he or she is employed on such work to work in excess of forty hours in such workweek unless such laborer or mechanic receives compensation at a rate not less than one and one-half times the basic rate of pay for all hours worked in excess of forty hours in such workweek. 29 CFR 5.5.

2. Violation; liability for unpaid wages; liquidated damages. In the event of any violation of the clause set forth in paragraph 1. of this section the contractor and any subcontractor responsible therefor shall be liable for the unpaid wages and interest from the date of the underpayment. In addition, such contractor and subcontractor shall be liable to the United States (in the case of work done under contract for the District of Columbia or a territory, to such District or to such territory), for liquidated damages. Such liquidated damages shall be computed with respect to each individual laborer or

mechanic, including watchpersons and guards, employed in violation of the clause set forth in paragraph 1. of this section, in the sum currently provided in 29 CFR 5.5(b)(2)* for each calendar day on which such individual was required or permitted to work in excess of the standard workweek of forty hours without payment of the overtime wages required by the clause set forth in paragraph 1. of this section.

* $31 as of January 15, 2023 (See 88 FR 88 FR 2210) as may be adjusted annually by the Department of Labor, pursuant to the Federal Civil Penalties Inflation Adjustment Act of 1990.

3. Withholding for unpaid wages and liquidated damages

a. *Withholding process.* The FHWA or the contracting agency may, upon its own action, or must, upon written request of an authorized representative of the Department of Labor, withhold or cause to be withheld from the contractor so much of the accrued payments or advances as may be considered necessary to satisfy the liabilities of the prime contractor or any subcontractor for any unpaid wages; monetary relief, including interest; and liquidated damages required by the clauses set forth in this section on this contract, any other Federal contract with the same prime contractor, or any other federally assisted contract subject to the Contract Work Hours and Safety Standards Act that is held by the same prime contractor (as defined in § 5.2). The necessary funds may be withheld from the contractor under this contract, any other Federal contract with the same prime contractor, or any other federally assisted contract that is subject to the Contract Work Hours and Safety Standards Act and is held by the same prime contractor, regardless of whether the other contract was awarded or assisted by the same agency, and such funds may be used to satisfy the contractor liability for which the funds were withheld.

b. *Priority to withheld funds.* The Department has priority to funds withheld or to be withheld in accordance with Section IV paragraph 2.a. or paragraph 3.a. of this section, or both, over claims to those funds by:

(1) A contractor's surety(ies), including without limitation performance bond sureties and payment bond sureties;

(2) A contracting agency for its reprocurement costs;

(3) A trustee(s) (either a court-appointed trustee or a U.S. trustee, or both) in bankruptcy of a contractor, or a contractor's bankruptcy estate;

(4) A contractor's assignee(s);

(5) A contractor's successor(s); or

(6) A claim asserted under the Prompt Payment Act, 31 U.S.C. 3901–3907.

4. Subcontracts. The contractor or subcontractor must insert in any subcontracts the clauses set forth in paragraphs 1. through 5. of this section and a clause requiring the subcontractors to include these clauses in any lower tier subcontracts. The prime contractor is responsible for compliance by any subcontractor or lower tier subcontractor with the clauses set forth in paragraphs 1. through 5. In the event of any violations of these clauses, the prime contractor and any subcontractor(s) responsible will be liable for any unpaid wages and monetary relief, including interest from the date of the underpayment or loss, due to any workers of lower-tier subcontractors, and associated liquidated damages and may be subject to debarment, as appropriate.

5. Anti-retaliation. It is unlawful for any person to discharge, demote, intimidate, threaten, restrain, coerce, blacklist, harass, or in any other manner discriminate against, or to cause any person to discharge, demote, intimidate, threaten, restrain, coerce, blacklist, harass, or in any other manner discriminate against, any worker or job applicant for:

a. Notifying any contractor of any conduct which the worker reasonably believes constitutes a violation of the Contract Work Hours and Safety Standards Act (CWHSSA) or its implementing regulations in this part;

b. Filing any complaint, initiating or causing to be initiated any proceeding, or otherwise asserting or seeking to assert on behalf of themselves or others any right or protection under CWHSSA or this part;

c. Cooperating in any investigation or other compliance action, or testifying in any proceeding under CWHSSA or this part; or

d. Informing any other person about their rights under CWHSSA or this part.

VI. SUBLETTING OR ASSIGNING THE CONTRACT

This provision is applicable to all Federal-aid construction contracts on the National Highway System pursuant to 23 CFR 635.116.

1. The contractor shall perform with its own organization contract work amounting to not less than 30 percent (or a greater percentage if specified elsewhere in the contract) of the total original contract price, excluding any specialty items designated by the contracting agency. Specialty items may be performed by subcontract and the amount of any such specialty items performed may be deducted from the total original contract price before computing the amount of work required to be performed by the contractor's own organization (23 CFR 635.116).

a. The term “perform work with its own organization” in paragraph 1 of Section VI refers to workers employed or leased by the prime contractor, and equipment owned or rented by the prime contractor, with or without operators. Such term does not include employees or equipment of a subcontractor or lower tier subcontractor, agents of the prime contractor, or any other assignees. The term may include payments for the costs of hiring leased employees from an employee leasing firm meeting all relevant Federal and State regulatory requirements. Leased employees may only be included in this term if the prime contractor meets all of the following conditions: (based on longstanding interpretation)

(1) the prime contractor maintains control over the supervision of the day-to-day activities of the leased employees;
(2) the prime contractor remains responsible for the quality of the work of the leased employees;

(3) the prime contractor retains all power to accept or exclude individual employees from work on the project; and

(4) the prime contractor remains ultimately responsible for the payment of predetermined minimum wages, the submission of payrolls, statements of compliance and all other Federal regulatory requirements.

b. "Specialty Items" shall be construed to be limited to work that requires highly specialized knowledge, abilities, or equipment not ordinarily available in the type of contracting organizations qualified and expected to bid or propose on the contract as a whole and in general are to be limited to minor components of the overall contract. 23 CFR 635.102.

2. Pursuant to 23 CFR 635.116(a), the contract amount upon which the requirements set forth in paragraph (1) of Section VI is computed includes the cost of material and manufactured products which are to be purchased or produced by the contractor under the contract provisions.

3. Pursuant to 23 CFR 635.116(c), the contractor shall furnish (a) a competent superintendent or supervisor who is employed by the firm, has full authority to direct performance of the work in accordance with the contract requirements, and is in charge of all construction operations (regardless of who performs the work) and (b) such other of its own organizational resources (supervision, management, and engineering services) as the contracting officer determines is necessary to assure the performance of the contract.

4. No portion of the contract shall be sublet, assigned or otherwise disposed of except with the written consent of the contracting officer, or authorized representative, and such consent when given shall not be construed to relieve the contractor of any responsibility for the fulfillment of the contract. Written consent will be given only after the contracting agency has assured that each subcontract is evidenced in writing and that it contains all pertinent provisions and requirements of the prime contract. (based on long-standing interpretation of 23 CFR 635.116).

5. The 30-percent self-performance requirement of paragraph (1) is not applicable to design-build contracts; however, contracting agencies may establish their own self-performance requirements. 23 CFR 635.116(d).

VII. SAFETY: ACCIDENT PREVENTION

This provision is applicable to all Federal-aid construction contracts and to all related subcontracts.

1. In the performance of this contract the contractor shall comply with all applicable Federal, State, and local laws governing safety, health, and sanitation (23 CFR Part 635). The contractor shall provide all safeguards, safety devices and protective equipment and take any other needed actions as it determines, or as the contracting officer may determine, to be reasonably necessary to protect the life and health of employees on the job and the safety of the public and to protect property in connection with the performance of the work covered by the contract. 23 CFR 635.108.

2. It is a condition of this contract, and shall be made a condition of each subcontract, which the contractor enters into pursuant to this contract, that the contractor and any subcontractor shall not permit any employee, in performance of the contract, to work in surroundings or under conditions which are unsanitary, hazardous or dangerous to his/her health or safety, as determined under construction safety and health standards (29 CFR Part 1926) promulgated by the Secretary of Labor, in accordance with Section 107 of the Contract Work Hours and Safety Standards Act (40 U.S.C. 3704). 29 CFR 1926.10.

3. Pursuant to 29 CFR 1926.3, it is a condition of this contract that the Secretary of Labor or authorized representative thereof, shall have right of entry to any site of contract performance to inspect or investigate the matter of compliance with the construction safety and health standards and to carry out the duties of the Secretary under Section 107 of the Contract Work Hours and Safety Standards Act (40 U.S.C. 3704).

VIII. FALSE STATEMENTS CONCERNING HIGHWAY PROJECTS

This provision is applicable to all Federal-aid construction contracts and to all related subcontracts.

In order to assure high quality and durable construction in conformity with approved plans and specifications and a high degree of reliability on statements and representations made by engineers, contractors, suppliers, and workers on Federal-aid highway projects, it is essential that all persons concerned with the project perform their functions as carefully, thoroughly, and honestly as possible. Willful falsification, distortion, or misrepresentation with respect to any facts related to the project is a violation of Federal law. To prevent any misunderstanding regarding the seriousness of these and similar acts, Form FHWA-1022 shall be posted on each Federal-aid highway project (23 CFR Part 635) in one or more places where it is readily available to all persons concerned with the project:

18 U.S.C. 1020 reads as follows:

"Whoever, being an officer, agent, or employee of the United States, or of any State or Territory, or whoever, whether a person, association, firm, or corporation, knowingly makes any false statement, false representation, or false report as to the character, quality, quantity, or cost of the material used or to be used, or the quantity or quality of the work performed or to be performed, or the cost thereof in connection with the submission of plans, maps, specifications, contracts, or costs of construction on any highway or related project submitted for approval to the Secretary of Transportation; or

Whoever knowingly makes any false statement, false representation, false report or false claim with respect to the character, quality, quantity, or cost of any work performed or to be performed, or materials furnished or to be furnished, in connection with the construction of any highway or related project approved by the Secretary of Transportation; or

Whoever knowingly makes any false statement or false representation as to material fact in any statement, certificate, or report submitted pursuant to provisions of the Federal-aid Roads Act approved July 11, 1916, (39 Stat. 355), as amended and supplemented;

Shall be fined under this title or imprisoned not more than 5 years or both."

IX. IMPLEMENTATION OF CLEAN AIR ACT AND FEDERAL WATER POLLUTION CONTROL ACT (42 U.S.C. 7606; 2 CFR 200.88; EO 11738)

This provision is applicable to all Federal-aid construction contracts in excess of $150,000 and to all related subcontracts. 48 CFR 2.101; 2 CFR 200.327.

By submission of this bid/proposal or the execution of this contract or subcontract, as appropriate, the bidder, proposer, Federal-aid construction contractor, subcontractor, supplier, or vendor agrees to comply with all applicable standards, orders or regulations issued pursuant to the Clean Air Act (42 U.S.C. 7401-7671q) and the Federal Water Pollution Control Act, as amended (33 U.S.C. 1251-1387). Violations must be reported to the Federal Highway Administration and the Regional Office of the Environmental Protection Agency. 2 CFR Part 200, Appendix II.

The contractor agrees to include or cause to be included the requirements of this Section in every subcontract, and further agrees to take such action as the contracting agency may direct as a means of enforcing such requirements. 2 CFR 200.327.

X. CERTIFICATION REGARDING DEBARMENT, SUSPENSION, INELIGIBILITY AND VOLUNTARY EXCLUSION

This provision is applicable to all Federal-aid construction contracts, design-build contracts, subcontracts, lower-tier subcontracts, purchase orders, lease agreements, consultant contracts or any other covered transaction requiring FHWA approval or that is estimated to cost $25,000 or more – as defined in 2 CFR Parts 180 and 1200. 2 CFR 180.220 and 1200.220.

1**. Instructions for Certification – First Tier Participants:**

a. By signing and submitting this proposal, the prospective first tier participant is providing the certification set out below.

b. The inability of a person to provide the certification set out below will not necessarily result in denial of participation in this covered transaction. The prospective first tier participant shall submit an explanation of why it cannot provide the certification set out below. The certification or explanation will be considered in connection with the department or agency's determination whether to enter into this transaction. However, failure of the prospective first tier participant to furnish a certification or an explanation shall disqualify such a person from participation in this transaction. 2 CFR 180.320.

c. The certification in this clause is a material representation of fact upon which reliance was placed when the contracting agency determined to enter into this transaction. If it is later determined that the prospective participant knowingly rendered an erroneous certification, in addition to other remedies available to the Federal Government, the contracting agency may terminate this transaction for cause of default. 2 CFR 180.325.

d. The prospective first tier participant shall provide immediate written notice to the contracting agency to whom this proposal is submitted if any time the prospective first tier participant learns that its certification was erroneous when submitted or has become erroneous by reason of changed circumstances. 2 CFR 180.345 and 180.350.

e. The terms "covered transaction," "debarred," "suspended," "ineligible," "participant," "person," "principal," and "voluntarily excluded," as used in this clause, are defined in 2 CFR Parts 180, Subpart I, 180.900-180.1020, and 1200. “First Tier Covered Transactions” refers to any covered transaction between a recipient or subrecipient of Federal funds and a participant (such as the prime or general contract). “Lower Tier Covered Transactions” refers to any covered transaction under a First Tier Covered Transaction (such as subcontracts). “First Tier Participant” refers to the participant who has entered into a covered transaction with a recipient or subrecipient of Federal funds (such as the prime or general contractor). “Lower Tier Participant” refers any participant who has entered into a covered transaction with a First Tier Participant or other Lower Tier Participants (such as subcontractors and suppliers).

f. The prospective first tier participant agrees by submitting this proposal that, should the proposed covered transaction be entered into, it shall not knowingly enter into any lower tier covered transaction with a person who is debarred, suspended, declared ineligible, or voluntarily excluded from participation in this covered transaction, unless authorized by the department or agency entering into this transaction. 2 CFR 180.330.

g. The prospective first tier participant further agrees by submitting this proposal that it will include the clause titled "Certification Regarding Debarment, Suspension, Ineligibility and Voluntary Exclusion-Lower Tier Covered Transactions," provided by the department or contracting agency, entering into this covered transaction, without modification, in all lower tier covered transactions and in all solicitations for lower tier covered transactions exceeding the $25,000 threshold. 2 CFR 180.220 and 180.300.

h. A participant in a covered transaction may rely upon a certification of a prospective participant in a lower tier covered transaction that is not debarred, suspended, ineligible, or voluntarily excluded from the covered transaction, unless it knows that the certification is erroneous. 2 CFR 180.300; 180.320, and 180.325. A participant is responsible for ensuring that its principals are not suspended, debarred, or otherwise ineligible to participate in covered transactions. 2 CFR 180.335. To verify the eligibility of its principals, as well as the eligibility of any lower tier prospective participants, each participant may, but is not required to, check the System for Award Management website (https://www.sam.gov/). 2 CFR 180.300, 180.320, and 180.325.

i. Nothing contained in the foregoing shall be construed to require the establishment of a system of records in order to render in good faith the certification required by this clause. The knowledge and information of the prospective participant is not required to exceed that which is normally possessed by a prudent person in the ordinary course of business dealings.

j. Except for transactions authorized under paragraph (f) of these instructions, if a participant in a covered transaction knowingly enters into a lower tier covered transaction with a person who is suspended, debarred, ineligible, or voluntarily excluded from participation in this transaction, in addition to other remedies available to the Federal Government, the department or agency may terminate this transaction for cause or default. 2 CFR 180.325.

* * * * *

2. Certification Regarding Debarment, Suspension, Ineligibility and Voluntary Exclusion – First Tier Participants:

a. The prospective first tier participant certifies to the best of its knowledge and belief, that it and its principals:

(1) Are not presently debarred, suspended, proposed for debarment, declared ineligible, or voluntarily excluded from participating in covered transactions by any Federal department or agency, 2 CFR 180.335;.

(2) Have not within a three-year period preceding this proposal been convicted of or had a civil judgment rendered against them for commission of fraud or a criminal offense in connection with obtaining, attempting to obtain, or performing a public (Federal, State, or local) transaction or contract under a public transaction; violation of Federal or State antitrust statutes or commission of embezzlement, theft, forgery, bribery, falsification or destruction of records, making false statements, or receiving stolen property, 2 CFR 180.800;

(3) Are not presently indicted for or otherwise criminally or civilly charged by a governmental entity (Federal, State or local) with commission of any of the offenses enumerated in paragraph (a)(2) of this certification, 2 CFR 180.700 and 180.800; and

(4) Have not within a three-year period preceding this application/proposal had one or more public transactions (Federal, State or local) terminated for cause or default. 2 CFR 180.335(d).

(5) Are not a corporation that has been convicted of a felony violation under any Federal law within the two-year period preceding this proposal (USDOT Order 4200.6 implementing appropriations act requirements); and

(6) Are not a corporation with any unpaid Federal tax liability that has been assessed, for which all judicial and administrative remedies have been exhausted, or have lapsed, and that is not being paid in a timely manner pursuant to an agreement with the authority responsible for collecting the tax liability (USDOT Order 4200.6 implementing appropriations act requirements).

b. Where the prospective participant is unable to certify to any of the statements in this certification, such prospective participant should attach an explanation to this proposal. 2 CFR 180.335 and 180.340.

* * * * *

3. **Instructions for Certification - Lower Tier Participants:**

(Applicable to all subcontracts, purchase orders, and other lower tier transactions requiring prior FHWA approval or estimated to cost $25,000 or more - 2 CFR Parts 180 and 1200). 2 CFR 180.220 and 1200.220.

a. By signing and submitting this proposal, the prospective lower tier participant is providing the certification set out below.

b. The certification in this clause is a material representation of fact upon which reliance was placed when this transaction was entered into. If it is later determined that the prospective lower tier participant knowingly rendered an erroneous certification, in addition to other remedies available to the Federal Government, the department, or agency with which this transaction originated may pursue available remedies, including suspension and/or debarment.

c. The prospective lower tier participant shall provide immediate written notice to the person to which this proposal is submitted if at any time the prospective lower tier participant learns that its certification was erroneous by reason of changed circumstances. 2 CFR 180.365.

d. The terms "covered transaction," "debarred," "suspended," "ineligible," "participant," "person," "principal," and "voluntarily excluded," as used in this clause, are defined in 2 CFR Parts 180, Subpart I, 180.900 – 180.1020, and 1200. You may contact the person to which this proposal is submitted for assistance in obtaining a copy of those regulations. “First Tier Covered Transactions” refers to any covered transaction between a recipient or subrecipient of Federal funds and a participant (such as the prime or general contract). “Lower Tier Covered Transactions” refers to any covered transaction under a First Tier Covered Transaction (such as subcontracts). “First Tier Participant” refers to the participant who has entered into a covered transaction with a recipient or subrecipient of Federal funds (such as the prime or general contractor). “Lower Tier Participant” refers any participant who has entered into a covered transaction with a First Tier Participant or other Lower Tier Participants (such as subcontractors and suppliers).

e. The prospective lower tier participant agrees by submitting this proposal that, should the proposed covered transaction be entered into, it shall not knowingly enter into any lower tier covered transaction with a person who is debarred, suspended, declared ineligible, or voluntarily excluded from participation in this covered transaction, unless authorized by the department or agency with which this transaction originated. 2 CFR 1200.220 and 1200.332.

f. The prospective lower tier participant further agrees by submitting this proposal that it will include this clause titled "Certification Regarding Debarment, Suspension, Ineligibility and Voluntary Exclusion-Lower Tier Covered Transaction," without modification, in all lower tier covered transactions and in all solicitations for lower tier covered transactions exceeding the $25,000 threshold. 2 CFR 180.220 and 1200.220.

g. A participant in a covered transaction may rely upon a certification of a prospective participant in a lower tier covered transaction that is not debarred, suspended, ineligible, or voluntarily excluded from the covered transaction, unless it knows that the certification is erroneous. A participant is responsible for ensuring that its principals are not suspended, debarred, or otherwise ineligible to participate in covered transactions. To verify the eligibility of its principals, as well as the eligibility of any lower tier prospective participants, each participant may, but is not required to, check the System for Award Management website (https://www.sam.gov/), which is compiled by the General Services Administration. 2 CFR 180.300, 180.320, 180.330, and 180.335.

h. Nothing contained in the foregoing shall be construed to require establishment of a system of records in order to render in good faith the certification required by this clause. The knowledge and information of participant is not required to exceed that which is normally possessed by a prudent person in the ordinary course of business dealings.

i. Except for transactions authorized under paragraph e of these instructions, if a participant in a covered transaction knowingly enters into a lower tier covered transaction with a person who is suspended, debarred, ineligible, or voluntarily

excluded from participation in this transaction, in addition to other remedies available to the Federal Government, the department or agency with which this transaction originated may pursue available remedies, including suspension and/or debarment. 2 CFR 180.325.

* * * * *

4. Certification Regarding Debarment, Suspension, Ineligibility and Voluntary Exclusion--Lower Tier Participants:

a. The prospective lower tier participant certifies, by submission of this proposal, that neither it nor its principals:

(1) is presently debarred, suspended, proposed for debarment, declared ineligible, or voluntarily excluded from participating in covered transactions by any Federal department or agency, 2 CFR 180.355;

(2) is a corporation that has been convicted of a felony violation under any Federal law within the two-year period preceding this proposal (USDOT Order 4200.6 implementing appropriations act requirements); and

(3) is a corporation with any unpaid Federal tax liability that has been assessed, for which all judicial and administrative remedies have been exhausted, or have lapsed, and that is not being paid in a timely manner pursuant to an agreement with the authority responsible for collecting the tax liability. (USDOT Order 4200.6 implementing appropriations act requirements)

b. Where the prospective lower tier participant is unable to certify to any of the statements in this certification, such prospective participant should attach an explanation to this proposal.

* * * * *

XI. CERTIFICATION REGARDING USE OF CONTRACT FUNDS FOR LOBBYING

This provision is applicable to all Federal-aid construction contracts and to all related subcontracts which exceed $100,000. 49 CFR Part 20, App. A.

1. The prospective participant certifies, by signing and submitting this bid or proposal, to the best of his or her knowledge and belief, that:

a. No Federal appropriated funds have been paid or will be paid, by or on behalf of the undersigned, to any person for influencing or attempting to influence an officer or employee of any Federal agency, a Member of Congress, an officer or employee of Congress, or an employee of a Member of Congress in connection with the awarding of any Federal contract, the making of any Federal grant, the making of any Federal loan, the entering into of any cooperative agreement, and the extension, continuation, renewal, amendment, or modification of any Federal contract, grant, loan, or cooperative agreement.

b. If any funds other than Federal appropriated funds have been paid or will be paid to any person for influencing or attempting to influence an officer or employee of any Federal agency, a Member of Congress, an officer or employee of Congress, or an employee of a Member of Congress in connection with this Federal contract, grant, loan, or cooperative agreement, the undersigned shall complete and submit Standard Form-LLL, "Disclosure Form to Report Lobbying," in accordance with its instructions.

2. This certification is a material representation of fact upon which reliance was placed when this transaction was made or entered into. Submission of this certification is a prerequisite for making or entering into this transaction imposed by 31 U.S.C. 1352. Any person who fails to file the required certification shall be subject to a civil penalty of not less than $10,000 and not more than $100,000 for each such failure.

3. The prospective participant also agrees by submitting its bid or proposal that the participant shall require that the language of this certification be included in all lower tier subcontracts, which exceed $100,000 and that all such recipients shall certify and disclose accordingly.

XII. USE OF UNITED STATES-FLAG VESSELS:

This provision is applicable to all Federal-aid construction contracts, design-build contracts, subcontracts, lower-tier subcontracts, purchase orders, lease agreements, or any other covered transaction. 46 CFR Part 381.

This requirement applies to material or equipment that is acquired for a specific Federal-aid highway project. 46 CFR 381.7. It is not applicable to goods or materials that come into inventories independent of an FHWA funded-contract.

When oceanic shipments (or shipments across the Great Lakes) are necessary for materials or equipment acquired for a specific Federal-aid construction project, the bidder, proposer, contractor, subcontractor, or vendor agrees:

1. To utilize privately owned United States-flag commercial vessels to ship at least 50 percent of the gross tonnage (computed separately for dry bulk carriers, dry cargo liners, and tankers) involved, whenever shipping any equipment, material, or commodities pursuant to this contract, to the extent such vessels are available at fair and reasonable rates for United States-flag commercial vessels. 46 CFR 381.7.

2. To furnish within 20 days following the date of loading for shipments originating within the United States or within 30 working days following the date of loading for shipments originating outside the United States, a legible copy of a rated, ‘on-board’ commercial ocean bill-of-lading in English for each shipment of cargo described in paragraph (b)(1) of this section to both the Contracting Officer (through the prime contractor in the case of subcontractor bills-of-lading) and to the Office of Cargo and Commercial Sealift (MAR-620), Maritime Administration, Washington, DC 20590. (MARAD requires copies of the ocean carrier's (master) bills of lading, certified onboard, dated, with rates and charges. These bills of lading may contain business sensitive information and therefore may be submitted directly to MARAD by the Ocean Transportation Intermediary on behalf of the contractor). 46 CFR 381.7.

ATTACHMENT A - EMPLOYMENT AND MATERIALS PREFERENCE FOR APPALACHIAN DEVELOPMENT HIGHWAY SYSTEM OR APPALACHIAN LOCAL ACCESS ROAD CONTRACTS (23 CFR 633, Subpart B, Appendix B)
This provision is applicable to all Federal-aid projects funded under the Appalachian Regional Development Act of 1965.

1. During the performance of this contract, the contractor undertaking to do work which is, or reasonably may be, done as on-site work, shall give preference to qualified persons who regularly reside in the labor area as designated by the DOL wherein the contract work is situated, or the subregion, or the Appalachian counties of the State wherein the contract work is situated, except:

a. To the extent that qualified persons regularly residing in the area are not available.

b. For the reasonable needs of the contractor to employ supervisory or specially experienced personnel necessary to assure an efficient execution of the contract work.

c. For the obligation of the contractor to offer employment to present or former employees as the result of a lawful collective bargaining contract, provided that the number of nonresident persons employed under this subparagraph (1c) shall not exceed 20 percent of the total number of employees employed by the contractor on the contract work, except as provided in subparagraph (4) below.

2. The contractor shall place a job order with the State Employment Service indicating (a) the classifications of the laborers, mechanics and other employees required to perform the contract work, (b) the number of employees required in each classification, (c) the date on which the participant estimates such employees will be required, and (d) any other pertinent information required by the State Employment Service to complete the job order form. The job order may be placed with the State Employment Service in writing or by telephone. If during the course of the contract work, the information submitted by the contractor in the original job order is substantially modified, the participant shall promptly notify the State Employment Service.

3. The contractor shall give full consideration to all qualified job applicants referred to him by the State Employment Service. The contractor is not required to grant employment to any job applicants who, in his opinion, are not qualified to perform the classification of work required.

4. If, within one week following the placing of a job order by the contractor with the State Employment Service, the State Employment Service is unable to refer any qualified job applicants to the contractor, or less than the number requested, the State Employment Service will forward a certificate to the contractor indicating the unavailability of applicants. Such certificate shall be made a part of the contractor's permanent project records. Upon receipt of this certificate, the contractor may employ persons who do not normally reside in the labor area to fill positions covered by the certificate, notwithstanding the provisions of subparagraph (1c) above.

5. The provisions of 23 CFR 633.207(e) allow the contracting agency to provide a contractual preference for the use of mineral resource materials native to the Appalachian region.

6. The contractor shall include the provisions of Sections 1 through 4 of this Attachment A in every subcontract for work which is, or reasonably may be, done as on-site work.

Title VI Special Provisions

In accordance with the provisions of Title VI of the Civil Rights Act of 1964 (78 Stat. 252, 42 US.C. §§ 2000d to 2000d-4) and the Regulations, hereby notifies all bidders that it will affirmatively ensure that any contract entered into pursuant to this advertisement, disadvantaged business enterprises will be afforded full and fair opportunity to submit bids in response to this invitation and will not be discriminated against on the grounds of race, color, or national origin in consideration for an award."

1. **Compliance with Regulations:** The contractor (hereinafter includes consultants) will comply with the Acts and the Regulations relative to Non-discrimination in Federally-assisted programs.

2. **Non-discrimination:** The contractor, with regard to the work performed by it during the contract, will not discriminate on the grounds of race, color, or national origin in the selection and retention of subcontractors, including procurements of materials and leases of equipment. The contractor will not participate directly or indirectly in the discrimination prohibited by the Acts and the Regulations, including employment practices when the contract covers any activity, project, or program set forth in Appendix B of 49 CFR Part 2 l.

3. **Solicitations for Subcontracts, Including Procurements of Materials and Equipment:** In all solicitations, either by competitive bidding, or negotiation made by the contractor for work to be performed under a subcontract, including procurements of materials, or leases of equipment, each potential subcontractor or supplier will be notified by the contractor of the contractor's obligations under this contract and the Acts and the Regulations relative to Non-discrimination on the grounds of race, color, or national origin.

4. **Information and Reports:** The contractor will provide all information and reports required by the Acts, the Regulations, and directives issued pursuant thereto and will permit access to its books, records, accounts, other sources of information, and its facilities as may be determined by the Recipient or the Federal Highway Administration to be pertinent to ascertain compliance with such Acts, Regulations, and instructions. Where any information required of a contractor is in the exclusive possession of another who fails or refuses to furnish the information, the contractor will so certify to the Recipient or the Federal Highway Administration, as appropriate, and will set forth what efforts it has made to obtain the information.

5. **Sanctions for Noncompliance:** In the event of a contractor's noncompliance with the Nondiscrimination provisions of this contract, the Recipient will impose such contract sanctions as it or the Federal Highway Administration may determine to be appropriate, including, but not limited to:

a. withholding payments to the contractor under the contract until the contractor complies; and/or
b. cancelling, terminating, or suspending a contract, in whole or in part.

6. **Incorporation of Provisions:** The contractor will include the provisions of paragraphs one through six in every subcontract, including procurements of materials and leases of equipment, unless exempt by the Acts, the Regulations and directives issued pursuant thereto. The contractor will take action with respect to any subcontract or procurement as the Recipient or the Federal Highway Administration may direct as

a means of enforcing such provisions including sanctions for noncompliance. Provided, that if the contractor becomes involved in, or is threatened with litigation by a subcontractor, or supplier because of such direction, the contractor may request the Recipient to enter into any litigation to protect the interests of the Recipient. In addition, the contractor may request the United States to enter into the litigation to protect the interests of the United States.

Pertinent Non-Discrimination Authorities:

☐ Title VI of the Civil Rights Act of 1964 (42 U.S.C. § 2000d et seq., 78 stat. 252), (prohibits discrimination on the basis of race, color, national origin); and 49 CFR Part 21.

☐ The Uniform Relocation Assistance and Real Property Acquisition Policies Act of 1970, (42 U.S.C. § 4601), (prohibits unfair treatment of persons displaced or whose property has been acquired because of Federal or Federal-aid programs and projects);

☐ Federal-Aid Highway Act of 1973, (23 U.S.C. § 324 et seq.), (prohibits discrimination on the basis of sex);

☐ Section 504 of the Rehabilitation Act of 1973, (29 U.S.C. § 794 et seq.), as amended, (prohibits discrimination on the basis of disability); and 49 CFR Part 27;

☐ The Age Discrimination Act of 1975, as amended, (42 U.S.C. § 6101 et seq.), (prohibits discrimination on the basis of age);

☐ Airport and Airway Improvement Act of 1982, (49 USC § 4 71, Section 4 7123), as amended, (prohibits discrimination based on race, creed, color, national origin, or sex);

☐ The Civil Rights Restoration Act of 1987, (PL 100-209), (Broadened the scope, coverage and applicability of Title VI of the Civil Rights Act of 1964, The Age Discrimination Act of 1975 and Section 504 of the Rehabilitation Act of 1973, by expanding the definition of the terms "programs or activities" to include all of the programs or activities of the Federal-aid recipients, sub-recipients and contractors, whether such programs or activities are Federally funded or not);

☐ Titles II and III of the Americans with Disabilities Act, which prohibit discrimination on the basis of disability in the operation of public entities, public and private transportation systems, places of public accommodation, and certain testing entities (42 U.S.C. §§ 12131-12189) as implemented by Department of Transportation regulations at 49 C.F.R. parts 37 and 38;

☐ The Federal Aviation Administration's Non-discrimination statute (49 U.S.C. § 47123) (prohibits discrimination on the basis of race, color, national origin, and sex);

☐ Executive Order 12898, Federal Actions to Address Environmental Justice in Minority Populations and Low-Income Populations, which ensures discrimination against minority populations by discouraging programs, policies, and activities with disproportionately high and adverse human health or environmental effects on minority and low-income populations;

☐ Executive Order 13166, Improving Access to Services for Persons with Limited English Proficiency, and resulting agency guidance, national origin discrimination includes discrimination because of limited English proficiency (LEP). To ensure compliance with Title VI, you must take reasonable steps to ensure that LEP persons have meaningful access to your programs (70 Fed. Reg. at 74087 to 74100);

☐ Title IX of the Education Amendments of 1972, as amended, which prohibits you from discriminating because of sex in education programs or activities (20 U .S.C. 1681 et seq).

BID NO. 24-5300-2
TRAVERS PARK PLAYGROUND & SPLASH PAD CONSTRUCTION PROJECT
ADDENDUM NO. 1

DATE:	May 15, 2024
BID OPENING:	**Wednesday, May 22, 2024 @ 2:00:00 P.M.**
PAGES:	Addendum (1 page)

Acknowledge receipt of this Addendum by inserting its number and date on the Bid Form. Failure to do so may subject bidder to disqualification. This Addendum forms a part of the Contract Documents. It modifies the Contract Documents as follows:

PART 2 – INSTRUCTIONS TO BIDDERS
2010 ISPWC 00200 - Instructions to Bidders for Construction Contracts
ARTICLE 17 – EVALUATION OF BIDS AND AWARD OF CONTRACT
Delete paragraph 17.05 in its entirety and replace with the following:

17.05 If the Contract is to be awarded, Owner will award the Contract to the qualified Bidder submitting the lowest responsive Bid. The lowest responsive Bid will be determined by the lowest Base Bid.

PART 10.0 CONSTRUCTION DRAWINGS

LD-1, Detail C. Artificial Turf Safety Surfacing (page 366)
Revise detail as follows:

Delete reference to 'Concrete' shown installed under 2" of SafetyFoam Pro.

Add the following note:

3" of 3/4" and smaller angular stone aggregate is to be provided under the safety surfacing / 2" SafetyFoam Pro. No concrete is to be provided under the safety surfacing, typical.

END OF ADDENDUM NO. 1

BID NO. 24-5300-2
TRAVERS PARK PLAYGROUND & SPLASH PAD CONSTRUCTION PROJECT
ADDENDUM NO. 2

DATE:	May 17, 2024
BID OPENING:	**Wednesday, May 22, 2024 @ 2:00:00 P.M.**
PAGES:	Addendum (2 pages) plus (176) pages of Attachments

Acknowledge receipt of this Addendum by inserting its number and date on the Bid Form. Failure to do so may subject bidder to disqualification. This Addendum forms a part of the Contract Documents. It modifies the Contract Documents as follows:

Part 8-Division 1 Specifications
Section 116810 – SPLASH PAD
Part 2 PRODUCTS
2.7 SPLASH PAD FEATURE SPECIFICATIONS (BASE BID)
G. Splash Pad Controller : 0010-2248 by WTS (Base Bid)
The following shall be added to subsection n.

-Controller to be installed in WaterPlay Locking Pad Mounted Controller Cabinet, C02-501, or approved equal. Cabinet dimensions: 2'-7"w x 4'-0"t x 1'-4"d. Color: Black

Part 8-Division 1 Specifications
Section 116810 – SPLASH PAD
Part 2 PRODUCTS
3.2 PERFORMANCE
F. Installation
4. Controller Installation
Delete subsection a. in its entirety and replace with:

a. Base Bid Installation: Install in controller cabinet adjacent to fence. Install per manufacturer's details and specifications. Connect controller to electrical service. Install on concrete pad, 4" broom finish concrete over 6" of crushed surfacing base course. Provide sweeps for electrical service and control wire.

Part 8-Division 1 Specifications
Section 116813 – Playground Equipment
2.2 PLAYGROUND EQUIPMENT, GENERAL
B. Playworld and ID Sculpture, Owner Furnished, Contractor Installed:
1. Playworld, see individual items for Alternates
Delete subsection b. in its entirety and replace with:

b. ID Sculpture Play Equipment

1) (1) Type I ID Sculpture Boulder 1 With Ramp Net.
2) (3) Type J, Mushroom Steppers

Part 10-CONSTRUCTION DRAWINGS:

Delete Sheet L-1, Playground Base Bid

To be replaced with:

L-1, North Hill Alternates ('Delta' 1, Addendum #2, 5/17/2024). Revision includes identification of an existing tree to remain, adjust grades as necessary to preserve and protect.

(*SEE ATTACHMENT TO THIS ADDNEDUM)*

Delete Sheet L-3, North Hill Alternates

To be replaced with:

L-3, North Hill Alternates ('Delta' 1, Addendum #2, 5/17/2024). Revision includes identification of an existing tree to remain, adjust grades as necessary to preserve and protect.

(*SEE ATTACHMENT TO THIS ADDNEDUM)*

CLARIFICATION FOR Q AND A NO. 1 - QUESTION #2- Are the technical specifications for the playground equipment available?

See attachments to this addendum for manufacturer's information regarding installation of play equipment. These are for reference only. Contractor will be provided with final installation instructions upon delivery of the Owner Furnished playground equipment.

END OF ADDENDUM NO. 2

PLAYGROUND CALLOUTS

- (A) 5-12 PLAYGROUND EQUIPMENT TYPE A OR APPROVED EQUAL. SEE SPECIFICATIONS.
- (B) TYPE B 2 BAY SWING, OR APPROVED EQUAL. SEE SPECIFICATIONS.
- (C) TYPE C 2 BAY ZIP LINE OR APPROVED EQUAL. SEE SPECIFICATIONS.
- (D) TYPE D TOT SWING. SEE SPECIFICATIONS.
- (E) TYPE E MERRY-GO-ROUND. SEE SPECIFICATIONS.
- (F) TYPE F. TOT STRUCTURE. SEE SPECIFICATIONS.
- (G) BEAR STATUE. SEE SHEET LD-1, DETAIL H.
- (H) COUGAR STATUE. SEE SHEET LD-1, DETAIL H.

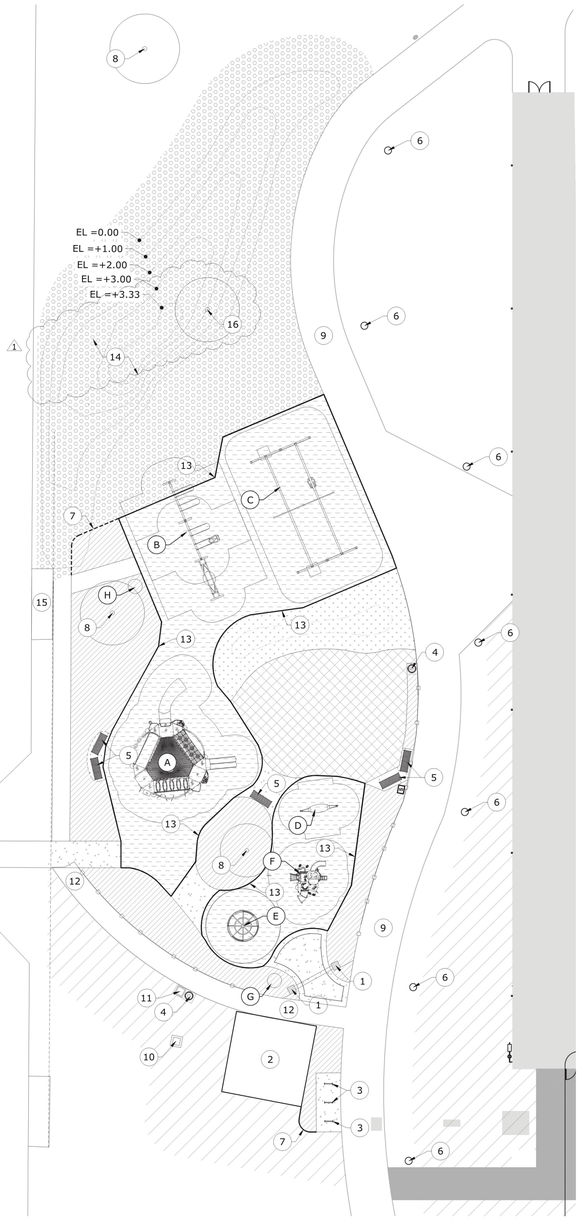

A PLAYGROUND CONSTRUCTION PLAN BASE BID

GRAPHIC SCALE
20 0 10 20 40
(IN FEET)
1 inch = 20 ft.



B PLAYGROUND LAYOUT PLAN BASE BID

GRAPHIC SCALE
20 0 10 20 40
(IN FEET)
1 inch = 20 ft.

CALLOUTS

1. GATEWAY ELEMENT. OWNER PROVIDED, OWNER INSTALLED.
2. SHELTER AND CONCRETE PAD TO BE RELOCATED AS PART OF BUILDING CONSTRUCTION. BY OTHERS.
3. BIKE RACKS ON CONCRETE PAD. BIKE RACK: SPORTWORKS TOFINO NO SCRATCH BIKE RACK, SEE SPECIFICATIONS. OWNER PROVIDED, OWNER INSTALLED.
4. TRASH RECEPTACLE ON CONCRETE PAD. DUMOR #107, 22 GALLON STEEL RECEPTACLE. OWNER PROVIDED, OWNER INSTALLED.
5. 6' BENCH ON CONCRETE PAD. DUMOR BENCH #165, DOUGLAS FIR OR THERMALLY MODIFIED RED OAK SEAT. CENTER AND END ARMREST OR APPROVED EQUAL. OWNER PROVIDED, OWNER INSTALLED.
6. EXISTING LIGHT AS PART OF BUILDING CONSTRUCTION TO REMAIN. PRESERVE AND PROTECT.
7. 6" CONCRETE MOWCURB. SEE SHEET LD-2, DETAIL F.
8. EXISTING TREE TO REMAIN, PRESERVE AND PROTECT. LOCATION APPROXIMATE, VERIFY IN FIELD. SEE SHEET LD-2 DETAIL I.
9. FIRE LANE AS PART OF SPORT BUILDING CONSTRUCTION. BY OTHERS.
10. 320 SQ IN STEEL PARK GRILL ON SINGLE POST WITH EMBEDDED MOUNTING. OWNER PROVIDED, OWNER INSTALLED.
11. CONCRETE HOT COAL DISPOSAL BIN. OWNER PROVIDED, OWNER INSTALLED.
12. SIDEWALK AS PART OF SPORT BUILDING CONSTRUCTION. BY OTHERS.
13. PLAY AREA CURB, TYP. SEE SHEET LD-1, DETAIL A.
14. SLEDDING HILL. SEE SHEET L-3 FOR ALTERNATES.
15. DUGOUT. PRESERVE AND PROTECT.
16. ADJUST GRADES AROUND EXISTING TREE AND COORDINATE WITH BASE BID GRADING AND ALTERNATE #5 IF ACCEPTED. GRADING TO BE APPROVED BY OWNER TO PRESERVE AND PROTECT TREE.

LEGEND

- ARTIFICIAL TURF SAFETY SURFACING, **BASE BID**. SEE SHEET LD-1, DETAIL C.
- SODDED TURF WITH AUTOMATIC OVERHEAD IRRIGATION, **BASE BID**.
- REPAIR AREA. SEEDED TURF WITH AUTOMATIC OVERHEAD IRRIGATION, **BASE BID**. ALTERNATE #7: INSTALL SODDED TURF GRASS. SEE SPECIFICATIONS.
- PLANTER AREA WITH MINERAL MULCH TYPE 'A' OVER WEED BARRIER FABRIC. SEE PLANTING NOTES FOR TYPE.
- SPLASH PAD. SEE SHEET L-4.
- 4" BROOM FINISH CONCRETE WALK.
- ASPHALT PATH, **BASE BID**. ALTERNATE #8: 4" CONCRETE WITH MEDIUM BROOM FINISH. SEE SPECIFICATIONS.
- LANDSCAPE AND IRRIGATION REPAIR BY OTHERS AS PART OF BUILDING CONTRACT.
- 4' TALL CHAINLINK FENCE, BLACK. SEE SPECIFICATIONS.

CONSTRUCTION NOTES

1. CONTRACTOR SHALL CALL 811 TO LOCATE ALL EXISTING ABOVE OR BELOW GRADE ON-SITE UTILITIES PRIOR TO COMMENCEMENT OF WORK, INCLUDING PLANTING. THE LOCATIONS OF UTILITIES, STRUCTURES AND SERVICES SHOWN IN THE CONTRACT DOCUMENTS SHALL BE DEEMED TO BE APPROXIMATIONS ONLY. ALL DISCREPANCIES BETWEEN WHAT IS SHOWN AND THE ACTUAL FIELD CONDITIONS SHALL BE REPORTED TO THE OWNER'S REPRESENTATIVE. PRESERVE AND PROTECT EXISTING UTILITIES TO REMAIN FROM DAMAGE OR DISRUPTION, TYPICAL. MAINTAIN LOCATES DURING CONSTRUCTION FOR REFERENCE. CONTRACTOR SHALL RECORD ALL UTILITY MARKINGS ON A SEPARATE SET OF DRAWINGS. THIS SET SHALL BE KEPT ON-SITE FOR REFERENCE FOR DURATION OF CONTRACT.
2. CONTRACTOR TO COORDINATE WITH OWNER'S MAINTENANCE PERSONNEL TO IDENTIFY AND PROTECT ANY EXISTING OWNER MAINTAINED UTILITIES, WATER LINES, IRRIGATION LINES, IRRIGATION CONTROL WIRES OR OTHER IMPROVEMENTS PRIOR TO CONSTRUCTION.
3. CONTRACTOR TO COORDINATE UTILITY WORK, SLEEVE AND IRRIGATION INSTALLATION TO AVOID CONFLICTS BETWEEN UTILITIES, IRRIGATION EQUIPMENT AND THE PLACEMENT OF TREES, SHRUBS AND LANDSCAPE EDGING/MOWCURBS.
4. THE INFORMATION ON THIS SHEET IS INCOMPLETE UNLESS ACCOMPANIED BY THE CORRESPONDING SPECIFICATION SECTIONS AND DETAILS DEVELOPED FOR THIS PROJECT. REFER TO THOSE SPECIFICATIONS AND DETAILS FOR ADDITIONAL INFORMATION.
5. CONTRACTOR IS RESPONSIBLE FOR VERIFYING CONDITIONS IN THE FIELD PRIOR TO CONSTRUCTION AND NOTIFYING THE OWNER AND OWNER'S REPRESENTATIVES OF ANY DISCREPANCIES.
6. CONTRACTOR TO COORDINATE THESE PLANS WITH CIVIL, ELECTRICAL AND ARCHITECTURAL PLANS. IMMEDIATELY NOTIFY OWNER'S REPRESENTATIVE IF CONFLICTS BETWEEN PLANS ARE IDENTIFIED OR IF ADDITIONAL INFORMATION OR CLARIFICATION IS REQUIRED FOR COORDINATION.
7. PRESERVE AND PROTECT EXISTING IMPROVEMENTS TO REMAIN. REPAIR OR REPLACE ALL CURBS AND WALKS DAMAGED DURING CONSTRUCTION.
8. LAYOUT AND EXTENT OF EXCAVATION TO BE STAKED AND REVIEWED IN THE FIELD BY LANDSCAPE ARCHITECT AND/OR OWNER.
9. LIABLE FOR ENCROACHMENT: THE CONTRACTOR SHALL BE RESPONSIBLE FOR IDENTIFYING AND UNDERSTANDING THE LIMITS OR WORK. CONTRACTOR IS RESPONSIBLE FOR ANY COORDINATION OF ENCROACHMENT ONTO ADJACENT PROPERTY, RIGHTS-OF-WAY, EASEMENTS, SET-BACKS, OR ANY OTHER LEGAL PROPERTY RESTRICTIONS EITHER MARKED OR UNMARKED.

LAYOUT NOTES

1. THE CONTRACTOR SHALL COORDINATE ALL CONSTRUCTION ELEMENTS INCLUDING UTILITY LOCATIONS AND REQUIRED SLEEVING PRIOR TO INSTALLATION. VERIFY CRITICAL DIMENSIONS, REFERENCE POINT LOCATIONS AND CONSTRUCTION CONDITIONS PRIOR TO INITIATING CONSTRUCTION. TEMPORARY BENCHMARKS OR REFERENCE POINTS SHALL BE SET BY THE CONTRACTOR AS NECESSARY. NOTIFY THE OWNER'S REPRESENTATIVE IMMEDIATELY SHOULD A DISCREPANCY ARISE AND REDIRECT WORK TO AVOID DELAYS.
2. ALL DIMENSIONS SHALL BE VERIFIED IN FIELD AND CHALKED, STRING LINED OR FLAGGED BY THE CONTRACTOR PRIOR TO CONSTRUCTION. ANY MINOR ADJUSTMENTS MADE TO ACHIEVE OVERALL DESIGN LAYOUT SHALL BE ACCEPTED BY THE OWNER PRIOR TO CONSTRUCTION.
3. LAYOUT IS BASED ON THE POINT(S) OF BEGINNING (P.O.B.) AND BASELINE(S) OR GRID SYSTEM AS SHOWN, SEE ARCHITECTURAL AND CIVIL DRAWINGS FOR ADDITIONAL INFORMATION.
4. ALL LAYOUT AND GRADES SHALL BE COMPLETED BY A LICENSED SURVEYOR.
5. LAYOUT AND FINAL GRADES TO BE APPROVED BY OWNER'S REPRESENTATIVE. SEE SPECIFICATIONS FOR FINISH GRADE REQUIREMENTS FOR FIELDS.

MATERIAL NOTES

1. ALL REINFORCING AND FORMS SHALL BE SECURED IN PLACE AND ACCEPTED BY OWNER'S REPRESENTATIVE PRIOR TO PLACING ANY CONCRETE.
2. CONCRETE FINISHES SHALL BE AS NOTED. CONTRACTOR SHALL PROVIDE 4'X4' SAMPLES OF ALL SPECIFIED FINISHES OF CONCRETE USING THE SAME MATERIALS THAT WILL BE USED IN THE ACTUAL CONSTRUCTION FOR EACH TYPE SPECIFIED. SAMPLES SHALL BE PREPARED WELL ENOUGH IN ADVANCE OF SCHEDULED CONCRETE POUR TO ALLOW FOR REVIEW AND POSSIBLE RE-POURING OF UNACCEPTABLE SAMPLES. UNACCEPTABLE SAMPLES SHALL BE RE-PREPARED UNTIL ACCEPTED BY THE OWNER'S REPRESENTATIVE. ACCEPTED SAMPLES SHALL BE PROTECTED AND REMAIN ON SITE FOR REFERENCE UNTIL FINAL ACCEPTANCE.
3. ALL FENCES AND GATES SHOWN ON PLAN ARE GRAPHIC REPRESENTATIONS; REFER TO DETAILS AND SPECIFICATIONS FOR PRECISE LOCATION AND GATE OPERATION.
4. ASPHALT SHALL NOT BE INSTALLED UNTIL ALL EDGES AND SITE FURNISHING PADS ARE INSTALLED.
5. DO NOT PLACE ANY ATHLETIC FIELD MATERIAL UNTIL SUBMITTALS ARE FULLY APPROVED. MATERIAL SUBMITTALS WILL BE COMPARED TO DELIVERED MATERIAL.

UNDERGROUND SERVICE ALERT
ONE-CALL NUMBER
811
CALL TWO BUSINESS DAYS BEFORE YOU DIG

Michael Terrell
Landscape Architecture, PLLC
1421 N. Meadowwood Lane
Suite 150
Liberty Lake, WA
(509) 922-7449

C 2024
Michael Terrell - Landscape Architecture, PLLC
This drawing may not be reproduced in any form without written permission. All rights and title to these drawings, including but not limited to the design are retained.

LANDSCAPE ARCHITECT'S SEAL

REGISTERED LANDSCAPE ARCHITECT NO. 234
MICHAEL D. TERRELL
STATE OF IDAHO

TRAVERS PARK PLAYGROUND & SPLASH PAD CONSTRUCTION
2016 PINE ST | SANDPOINT, ID
CITY OF SANDPOINT

PLAYGROUND - BASE BID

REVISION	DATE
1 ADDENDUM #2	5.17.24
2	
3	
4	

JOB NUMBER 22-100A
DATE 5/1/24
DRAWN BY SLH
CHECKED BY MDT

DRAWING 2 OF 12

L-1

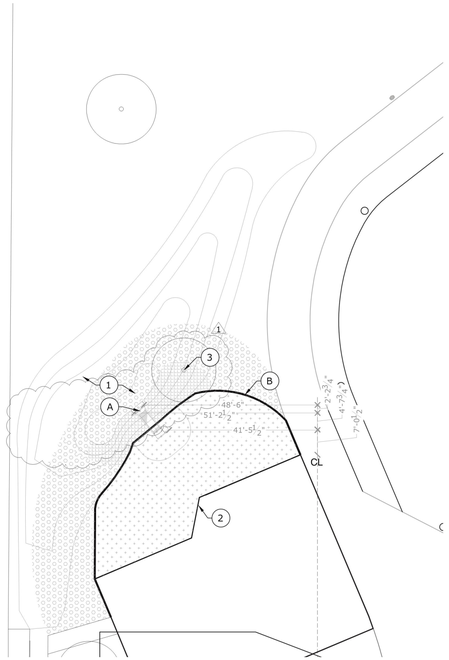

BASE BID CALLOUTS

1. SLEDDING HILL. SEE SHEET L-1.
2. PLAY AREA CURB. SEE SHEET LD-1, DETAIL A.
3. ADJUST GRADES AROUND EXISTING TREE AND COORDINATE WITH BASE BID GRADING AND ALTERNATE #5 IF ACCEPTED. GRADING TO BE APPROVED BY OWNER TO PRESERVE AND PROTECT TREE.

ALTERNATE #4 CALLOUTS

- A — TYPE H ROLLER SLIDE WITH ADA TRANSFER SEAT AT BOTTOM OR APPROVED EQUAL. SEE SPECIFICATIONS.
- B — 12" EWF PLAYGROUND CURB. SEE SHEET LD-1, DETAIL D.

LEGEND

- REPAIR AREA. SEEDED TURF WITH AUTOMATIC OVERHEAD IRRIGATION. ADJUST IRRIGATION AS NECESSARY TO ACHIEVE HEAD TO HEAD COVERAGE.
- PLANTER AREA WITH MINERAL MULCH TYPE 'A' OVER WEED BARRIER FABRIC. SEE PLANTING NOTES FOR TYPE.
- ENGINEERED WOOD FIBER SAFETY SURFACING. SEE SHEET LD-1, DETAIL D.
- BOULDER EMBANKMENT WALL AS PART OF ALTERNATE #4. SEE SHEET LD-1, DETAIL E.

B ALTERNATE #4 - EMBANKMENT BOULDERS, ROLLER SLIDE, SAFETY SURFACING CURB

SCALE: 1" = 20' - 0"



PLANT LEGEND

CODE	BOTANICAL NAME	COM. NAME	SIZE	H	X	W	QTY
TREES							
AR	Acer rubrum `Bowhall`	Bowhall Maple	2" Cal.	40`		15`	3

PLANT QUANTITY NOTE: CONTRACTOR SHALL VERIFY QUANTITIES IN PLANT LEGEND WITH PLANT SYMBOLS ON PLANS.

PLANT CALLOUTS

- XX — PLANT ABBREVIATION
- ## — NUMBER OF PLANTS
- EX — EXISTING

BASE BID CALLOUTS

1. SLEDDING HILL. SEE SHEET L-1.
2. 12" EWF PLAYGROUND CURB AS PART OF BASE BID, SEE SHEET L-1, DETAIL D.
3. 6" CONCRETE MOWCURB. SEE SHEET LD-2, DETAIL F.
4. ADJUST GRADES AROUND EXISTING TREE AND COORDINATE WITH BASE BID GRADING AND ALTERNATE #5 IF ACCEPTED. GRADING TO BE APPROVED BY OWNER TO PRESERVE AND PROTECT TREE.

ALTERNATE #3 CALLOUTS

- A — 6" CONCRETE MOWCURB. SEE SHEET LD-2, DETAIL F.
- B — TYPE G FREE NOTES HARMONY PARK - BUTTERFLY ENSEMBLE, SURFACE MOUNTED. TURQUOISE, YELLOW, AND ORANGE BUTTERFLIES OR APPROVED EQUAL. SEE SPECIFICATIONS.
- C — 6' BENCH ON CONCRETE PAD. DUMOR BENCH #165, DOUGLAS FIR OR THERMALLY MODIFIED RED OAK SEAT. CENTER AND END ARMREST OR APPROVED EQUAL. OWNER PROVIDED, OWNER INSTALLED.

LEGEND

- REPAIR AREA. SEEDED TURF WITH AUTOMATIC OVERHEAD IRRIGATION. ADJUST IRRIGATION AS NECESSARY TO ACHIEVE HEAD TO HEAD COVERAGE.
- PLANTER AREA WITH MINERAL MULCH TYPE 'A' OVER WEED BARRIER FABRIC. SEE PLANTING NOTES FOR TYPE.
- ASPHALT PATH. ALTERNATE #8: 4" CONCRETE WITH MEDIUM BROOM FINISH.

A ALTERNATE #3 - ASPHALT PATH, PLAZA, BUTTERFLY MUSIC ENSEMBLE

SCALE: 1" = 20' - 0"

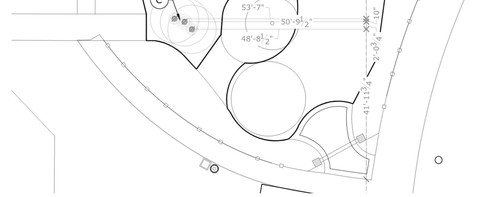

BASE BID CALLOUTS

1. SLEDDING HILL. SEE SHEET L-1.
2. PLAY AREA CURB. SEE SHEET LD-1, DETAIL A.
3. ADJUST GRADES AROUND EXISTING TREE AND COORDINATE WITH BASE BID GRADING AND ALTERNATE #5 IF ACCEPTED. GRADING TO BE APPROVED BY OWNER TO PRESERVE AND PROTECT TREE.

ALTERNATE #5 CALLOUTS

- A — TYPE I ID SCULPTURE BOULDER 1 WITH RAMP NET OR APPROVED EQUAL. SEE SPECIFICATIONS.
- B — 12" EWF PLAYGROUND CURB. SEE SHEET LD-1, DETAIL D.
- C — TYPE J ID SCULPTURE MUSHROOM STEPPERS OR APPROVED EQUAL. SEE SPECIFICATIONS.

LEGEND

- REPAIR AREA. SEEDED TURF WITH AUTOMATIC OVERHEAD IRRIGATION. ADJUST IRRIGATION AS NECESSARY TO ACHIEVE HEAD TO HEAD COVERAGE.
- ENGINEERED WOOD FIBER SAFETY SURFACING. SEE SHEET LD-1, DETAIL D.

C ALTERNATE #5 - ID SCULPTURE PLAY EQUIPMENT

SCALE: 1" = 20' - 0"

CONSTRUCTION NOTES

1. CONTRACTOR SHALL CALL 811 TO LOCATE ALL EXISTING ABOVE OR BELOW GRADE ON-SITE UTILITIES PRIOR TO COMMENCEMENT OF WORK, INCLUDING PLANTING. THE LOCATIONS OF UTILITIES, STRUCTURES AND SERVICES SHOWN IN THE CONTRACT DOCUMENTS SHALL BE DEEMED TO BE APPROXIMATIONS ONLY. ALL DISCREPANCIES BETWEEN WHAT IS SHOWN AND THE ACTUAL FIELD CONDITIONS SHALL BE REPORTED TO THE OWNER'S REPRESENTATIVE. PRESERVE AND PROTECT EXISTING UTILITIES TO REMAIN FROM DAMAGE OR DISRUPTION, TYPICAL. MAINTAIN LOCATES DURING CONSTRUCTION FOR REFERENCE. CONTRACTOR SHALL RECORD ALL UTILITY MARKINGS ON A SEPARATE SET OF DRAWINGS. THIS SET SHALL BE KEPT ON-SITE FOR REFERENCE FOR DURATION OF CONTRACT.
2. CONTRACTOR TO COORDINATE WITH OWNER'S MAINTENANCE PERSONNEL TO IDENTIFY AND PROTECT ANY EXISTING OWNER MAINTAINED UTILITIES, WATER LINES, IRRIGATION LINES, IRRIGATION CONTROL WIRES OR OTHER IMPROVEMENTS PRIOR TO CONSTRUCTION.
3. CONTRACTOR TO COORDINATE UTILITY WORK, SLEEVE AND IRRIGATION INSTALLATION TO AVOID CONFLICTS BETWEEN UTILITIES, IRRIGATION EQUIPMENT AND THE PLACEMENT OF TREES, SHRUBS AND LANDSCAPE EDGING/MOWCURBS.
4. THE INFORMATION ON THIS SHEET IS INCOMPLETE UNLESS ACCOMPANIED BY THE CORRESPONDING SPECIFICATION SECTIONS AND DETAILS DEVELOPED FOR THIS PROJECT. REFER TO THOSE SPECIFICATIONS AND DETAILS FOR ADDITIONAL INFORMATION.
5. CONTRACTOR IS RESPONSIBLE FOR VERIFYING CONDITIONS IN THE FIELD PRIOR TO CONSTRUCTION AND NOTIFYING THE OWNER AND OWNER'S REPRESENTATIVES OF ANY DISCREPANCIES.
6. CONTRACTOR TO COORDINATE THESE PLANS WITH CIVIL, ELECTRICAL AND ARCHITECTURAL PLANS. IMMEDIATELY NOTIFY OWNER'S REPRESENTATIVE IF CONFLICTS BETWEEN PLANS ARE IDENTIFIED OR IF ADDITIONAL INFORMATION OR CLARIFICATION IS REQUIRED FOR COORDINATION.
7. PRESERVE AND PROTECT EXISTING IMPROVEMENTS TO REMAIN. REPAIR OR REPLACE ALL CURBS AND WALKS DAMAGED DURING CONSTRUCTION.
8. LAYOUT AND EXTENT OF EXCAVATION TO BE STAKED AND REVIEWED IN THE FIELD BY LANDSCAPE ARCHITECT AND/OR OWNER.
9. LIABLE FOR ENCROACHMENT: THE CONTRACTOR SHALL BE RESPONSIBLE FOR IDENTIFYING AND UNDERSTANDING THE LIMITS OR WORK. CONTRACTOR IS RESPONSIBLE FOR ANY COORDINATION OF ENCROACHMENT ONTO ADJACENT PROPERTY, RIGHTS-OF-WAY, EASEMENTS, SET-BACKS, OR ANY OTHER LEGAL PROPERTY RESTRICTIONS EITHER MARKED OR UNMARKED.

LAYOUT NOTES

1. THE CONTRACTOR SHALL COORDINATE ALL CONSTRUCTION ELEMENTS INCLUDING UTILITY LOCATIONS AND REQUIRED SLEEVING PRIOR TO INSTALLATION. VERIFY CRITICAL DIMENSIONS, REFERENCE POINT LOCATIONS AND CONSTRUCTION CONDITIONS PRIOR TO INITIATING CONSTRUCTION. TEMPORARY BENCHMARKS OR REFERENCE POINTS SHALL BE SET BY THE CONTRACTOR AS NECESSARY. NOTIFY THE OWNER'S REPRESENTATIVE IMMEDIATELY SHOULD A DISCREPANCY ARISE AND REDIRECT WORK TO AVOID DELAYS.
2. ALL DIMENSIONS SHALL BE VERIFIED IN FIELD AND CHALKED, STRING LINED OR FLAGGED BY THE CONTRACTOR PRIOR TO CONSTRUCTION. ANY MINOR ADJUSTMENTS MADE TO ACHIEVE OVERALL DESIGN LAYOUT SHALL BE ACCEPTED BY THE OWNER PRIOR TO CONSTRUCTION.
3. LAYOUT IS BASED ON THE POINT(S) OF BEGINNING (P.O.B.) AND BASELINE(S) OR GRID SYSTEM AS SHOWN, SEE ARCHITECTURAL AND CIVIL DRAWINGS FOR ADDITIONAL INFORMATION.
4. ALL LAYOUT AND GRADES SHALL BE COMPLETED BY A LICENSED SURVEYOR.
5. LAYOUT AND FINAL GRADES TO BE APPROVED BY OWNER'S REPRESENTATIVE. SEE SPECIFICATIONS FOR FINISH GRADE REQUIREMENTS FOR FIELDS.

MATERIAL NOTES

1. ALL REINFORCING AND FORMS SHALL BE SECURED IN PLACE AND ACCEPTED BY OWNER'S REPRESENTATIVE PRIOR TO PLACING ANY CONCRETE.
2. CONCRETE FINISHES SHALL BE AS NOTED. CONTRACTOR SHALL PROVIDE 4'X4' SAMPLES OF ALL SPECIFIED FINISHES OF CONCRETE USING THE SAME MATERIALS THAT WILL BE USED IN THE ACTUAL CONSTRUCTION FOR EACH TYPE SPECIFIED. SAMPLES SHALL BE PREPARED WELL ENOUGH IN ADVANCE OF SCHEDULED CONCRETE POUR TO ALLOW FOR REVIEW AND POSSIBLE RE-POURING OF UNACCEPTABLE SAMPLES. UNACCEPTABLE SAMPLES SHALL BE RE-PREPARED UNTIL ACCEPTED BY THE OWNER'S REPRESENTATIVE. ACCEPTED SAMPLES SHALL BE PROTECTED AND REMAIN ON SITE FOR REFERENCE UNTIL FINAL ACCEPTANCE.
3. ALL FENCES AND GATES SHOWN ON PLAN ARE GRAPHIC REPRESENTATIONS; REFER TO DETAILS AND SPECIFICATIONS FOR PRECISE LOCATION AND GATE OPERATION.
4. ASPHALT SHALL NOT BE INSTALLED UNTIL ALL EDGES AND SITE FURNISHING PADS ARE INSTALLED.
5. DO NOT PLACE ANY ATHLETIC FIELD MATERIAL UNTIL SUBMITTALS ARE FULLY APPROVED. MATERIAL SUBMITTALS WILL BE COMPARED TO DELIVERED MATERIAL.

Michael Terrell
Landscape Architecture, PLLC
1421 N. Meadowwood Lane
Suite 150
Liberty Lake, WA
(509) 922-7449

C 2024
Michael Terrell - Landscape Architecture, PLLC
This drawing may not be reproduced in any form without written permission. All rights and title to these drawings, including but not limited to the design are retained.

LANDSCAPE ARCHITECT'S SEAL

REGISTERED LANDSCAPE ARCHITECT NO. 234
MICHAEL D. TERRELL
STATE OF IDAHO

TRAVERS PARK PLAYGROUND & SPLASH PAD CONSTRUCTION
2016 PINE ST | SANDPOINT, ID
CITY OF SANDPOINT

NORTH HILL ALTERNATES

REVISION	DATE
1 ADDENDUM #2	5.17.24
2	
3	
4	

JOB NUMBER: 22-100A
DATE: 5/1/24
DRAWN BY: SLH
CHECKED BY: MDT

DRAWING 4 OF 12

L-3

UNDERGROUND SERVICE ALERT
ONE-CALL NUMBER
811
CALL TWO BUSINESS DAYS BEFORE YOU DIG



© 2024 By Landscape Structures. All rights reserved.



© 2024 By Landscape Structures. All rights reserved.

landscape structures®

ISO 9001 Certified

SAFETY NOTE
Choose a protective surfacing m
has a Critical Height Value of a
height of the Highest Accessible Part/Fall
Height of the adjacent equipment. (Ref.
ASTM F1487.)

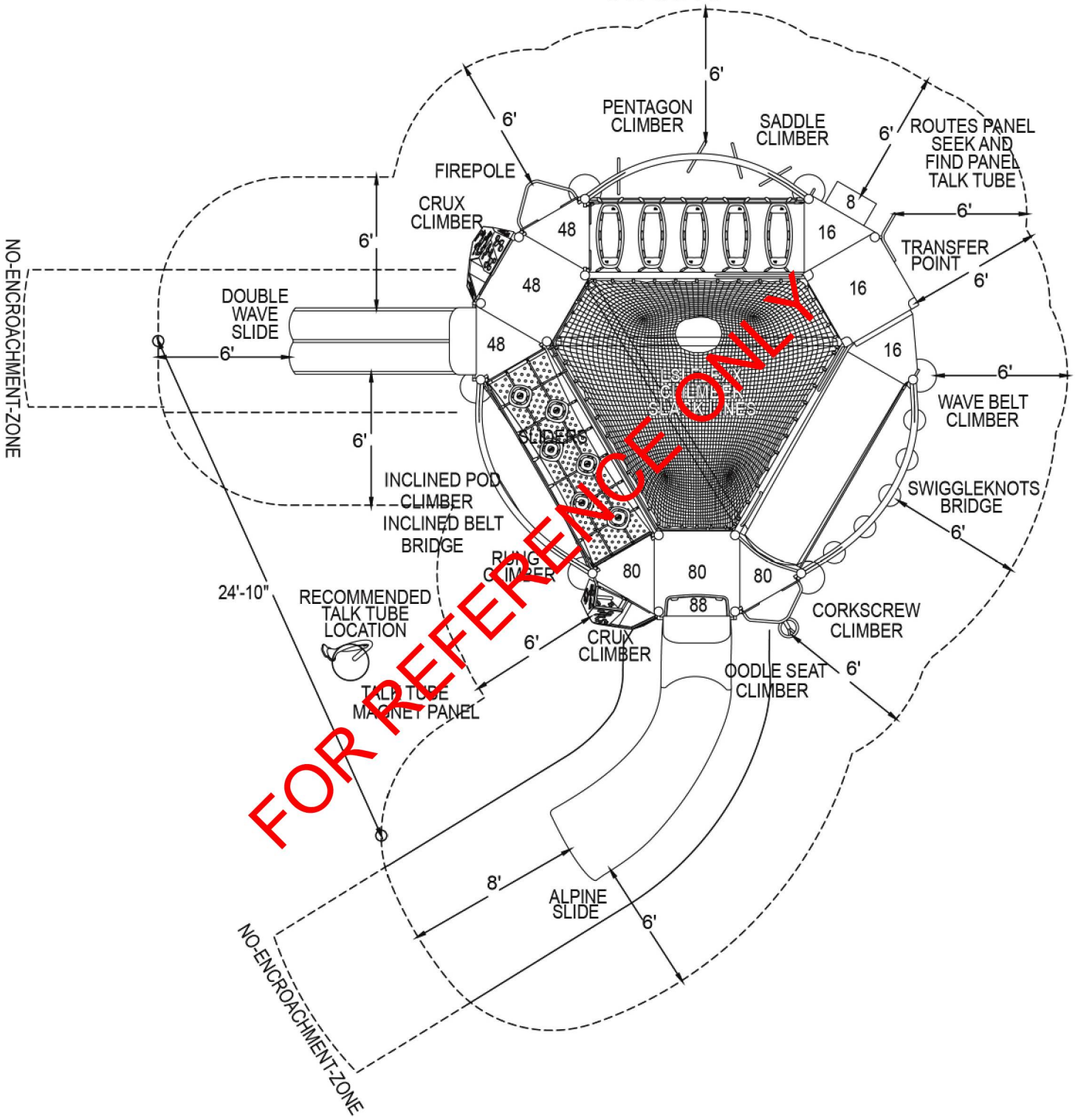

FOR REFERENCE ONLY

601 7TH STREET SOUTH, DELANO, MINNESOTA 55328-8605 888-574-4678 LSI Install Help 888-438-6574 LSI Direct 763-972-5200 Int. FAX (763) 972-3185

© 2024 By Landscape Structures. All rights reserved.

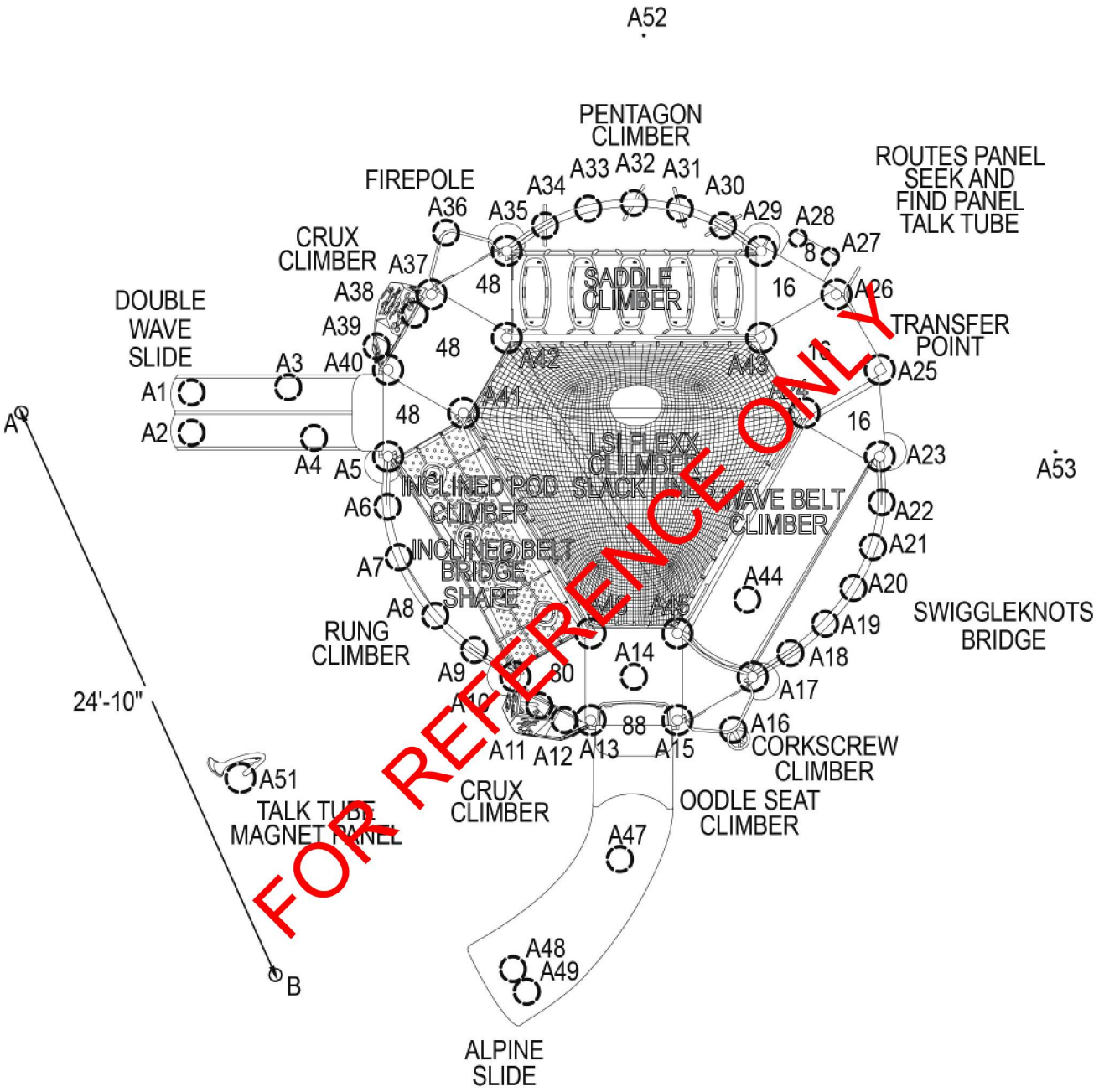

DIRECT BURY

© 2024 By Landscape Structures. All rights reserved.

N.	I.D.	A (ft-in)	B (ft-in)	DIA (in)
1	A1	6'-10 1/2"	23'-8 1/2"	12
2	A2	6'-10 1/2"	22'-1 1/2"	12
3	A3	10'-9 1/2"	23'-8 1/2"	12
4	A4	11'-10"	21'-8 1/2"	12
5	A5	14'-10 1/2"	21'-4 1/2"	14
6	A6	15'-2 1/2"	19'-5"	12
7	A7	16'-3"	17'-6 1/2"	12
8	A8	18'-7"	15'-10"	12
9	A9	20'-7"	15'-4"	12
10	A10	22'-6 1/2"	15'-5"	14
11	A11	23'-11 1/2"	15'-2 1/2"	12
12	A12	25'-1 1/2"	15'-6 1/2"	12
13	A13	26'-0 1/2"	16'-4"	14
14	A14	26'-10 1/2"	18'-9 1/2"	12
15	A15	29'-2"	19'-2"	14
16	A16	31'-4 1/2"	20'-11"	12
17	A17	31'-3 1/2"	22'-8"	14
18	A18	32'-5 1/2"	24'-5 1/2"	12
19	A19	33'-5 1/2"	26'-3 1/2"	12
20	A20	34'-3"	28'	12
21	A21	34'-8 1/2"	29'-7 1/2"	12
22	A22	34'-10"	30'-11 1/2"	12
23	A23	34'-7 1/2"	32'-1"	14
24	A24	31'-6 1/2"	31'-1"	14
25	A25	34'-7 1/2"	34'-5 1/2"	14
26	A26	33'-2"	35'-6 1/2"	14
27	A27	33'-2"	36'-7"	8
28	A28	32'-0 1/2"	36'-5"	8
29	A29	30'-6"	35'-1 1/2"	14
30	A30	29'-3"	35'-2"	12
31	A31	27'-9"	34'-1"	12
32	A32	26'-1"	3 1/2"	12
33	A33	24'-3"	4"	12
34	A34	22'-4 1/2"	32'-1"	12
35	A35	20'-7"	30'-7 1/2"	14
36	A36	18'-6 1/2"	30'-8 1/2"	12
37	A37	17'-2"	28'-1 1/2"	14
38	A38	16'-3 1/2"	27'-2 1/2"	12
39	A39	14'-6 1/2"	25'-8"	12
40	A40	14'-10 1/2"	24'-10"	14
41	A41	17'-9 1/2"	23'-10 1/2"	14
42	A42	19'-9"	27'-4"	14
43	A43	29'-11 1/2"	32'-3 1/2"	14
44	A44	30'-2"	24'-3 1/2"	12
45	A45	27'-10 1/2"	21'-3"	14
46	A46	24'-7"	18'-8 1/2"	14
47	A47	30'-1"	14'-7 1/2"	12
48	A48	29'-11"	9'-7"	12
49	A49	30'-11 1/2"	10'-1 1/2"	12
50	A50	36'-4 1/2"	11'-10"	REF PT

N.	I.D.	A (ft-in)	B (ft-in)	DIA (in)
51	A51	17'-2"	8'-1"	14
52	A52	29'-3 1/2"	40'-8"	REF PT
53	A53	41'-8"	37'-10"	REF PT

FOR REFERENCE ONLY

DIRECT BURY

© 2024 By Landscape Structures. All rights reserved.

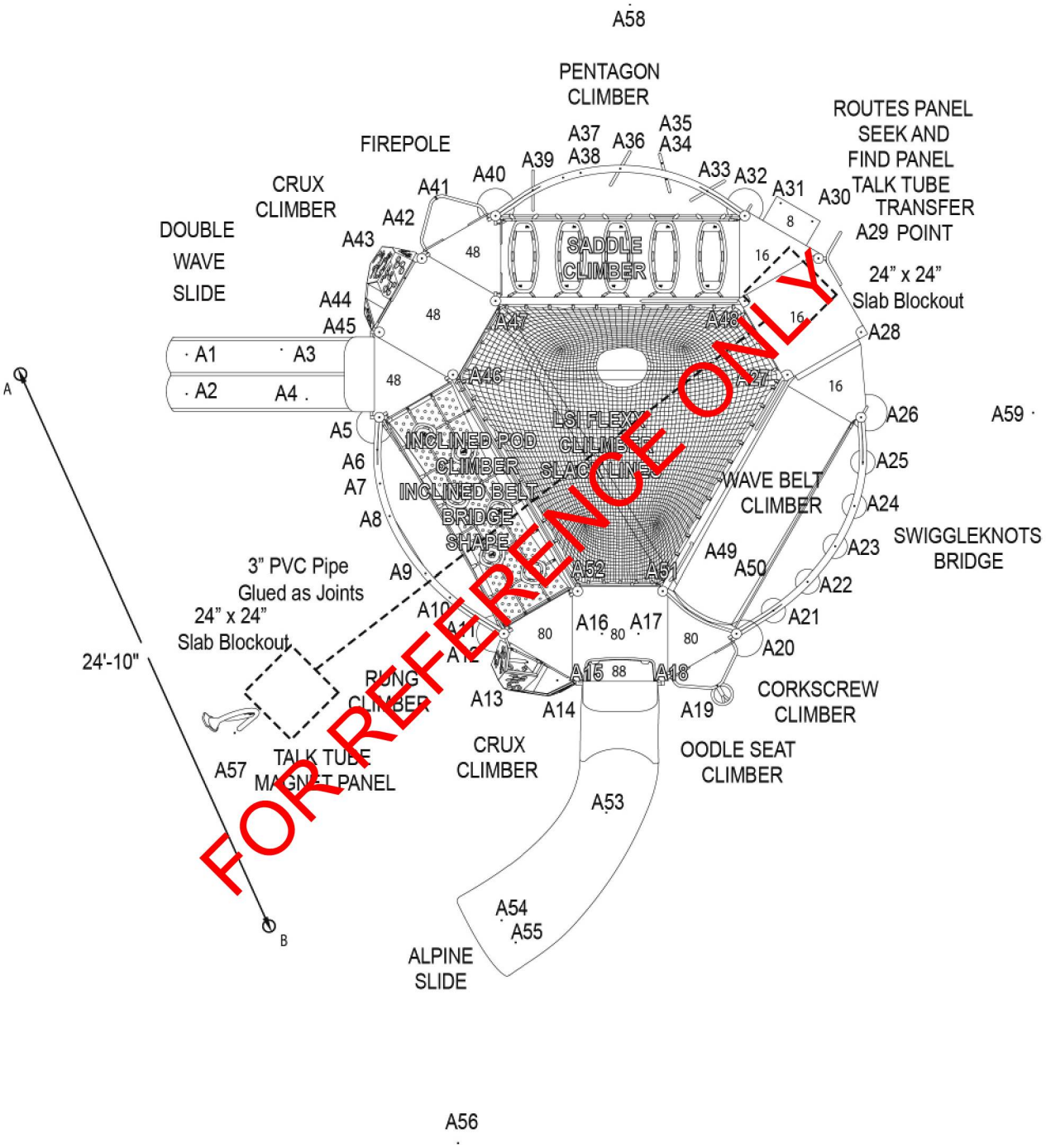

SURFACE MOUNT

© 2024 By Landscape Structures. All rights reserved.

landscape structures®

[redacted]

ISO 9001 Certified

SAFETY NOTE
Choose a protective surfacing m
has a Critical Height Value of a
height of the Highest Accessible Part/Fall
Height of the adjacent equipment. (Ref.
ASTM F1487.)

N.	I.D.	A (ft-in)	B (ft-in)	DIA (in)
1	A1	6'-10 1/2"	23'-8 1/2"	REF PT
2	A2	6'-10 1/2"	22'-1 1/2"	REF PT
3	A3	10'-9 1/2"	23'-8 1/2"	REF PT
4	A4	11'-10"	21'-8 1/2"	REF PT
5	A5	14'-10 1/2"	21'-4 1/2"	REF PT
6	A6	15'	20'-0 1/2"	REF PT
7	A7	15'-5 1/2"	18'-9"	REF PT
8	A8	16'-3"	17'-6 1/2"	REF PT
9	A9	18'-7"	15'-10"	REF PT
10	A10	19'-11"	15'-5"	REF PT
11	A11	21'-3 1/2"	15'-4"	REF PT
12	A12	22'-6 1/2"	15'-5"	REF PT
13	A13	23'-11 1/2"	15'-2 1/2"	REF PT
14	A14	25'-5"	15'-7"	REF PT
15	A15	26'-0 1/2"	16'-4"	REF PT
16	A16	26'-2"	18'-2 1/2"	REF PT
17	A17	27'-6 1/2"	19'-4 1/2"	REF PT
18	A18	29'-2"	19'-2"	REF PT
19	A19	31'-4 1/2"	20'-11"	REF PT
20	A20	31'-3 1/2"	22'-8"	REF PT
21	A21	32'-5 1/2"	24'-5 1/2"	REF PT
22	A22	33'-5 1/2"	26'-3 1/2"	REF PT
23	A23	34'-3"	28'	REF PT
24	A24	34'-8 1/2"	29'-7 1/2"	REF PT
25	A25	34'-10"	30'-11 1/2"	REF PT
26	A26	34'-7 1/2"	32'-1"	REF PT
27	A27	31'-6 1/2"	31'-1"	REF PT
28	A28	34'-7 1/2"	34'-5 1/2"	REF PT
29	A29	33'-2"	35'-6 1/2"	REF PT
30	A30	33'-2"	36'-7"	REF PT
31	A31	32'-0 1/2"	36'-3"	REF PT
32	A32	30'-6"	35'-1 1/2"	REF PT
33	A33	29'-2 1/2"	35'-2"	REF PT
34	A34	27'-9"	34'-9"	REF PT
35	A35	27'-9"	35'-3"	REF PT
36	A36	26'-1	34'-3 1/2"	REF PT
37	A37	24'-5 1/2"	33'-6"	REF PT
38	A38	23'-8 1/2"	33'-0 1/2"	REF PT
39	A39	22'-4 1/2"	32'-1 1/2"	REF PT
40	A40	20'-7"	30'-7 1/2"	REF PT
41	A41	18'-6 1/2"	30'-8 1/2"	REF PT
42	A42	17'-2"	28'-1 1/2"	REF PT
43	A43	16'-3 1/2"	27'-2 1/2"	REF PT
44	A44	14'-6 1/2"	25'-8"	REF PT
45	A45	14'-10 1/2"	24'-10"	REF PT
46	A46	17'-9 1/2"	23'-10 1/2"	REF PT
47	A47	19'-9"	27'-4"	REF PT
48	A48	29'-11 1/2"	32'-3 1/2"	REF PT
49	A49	29'-5 1/2"	23'-9 1/2"	REF PT
50	A50	30'-9 1/2"	24'-4"	REF PT

N.	I.D.	A (ft-in)	B (ft-in)	DIA (in)
51	A51	27'-10 1/2"	21'-3"	REF PT
52	A52	24'-7"	18'-8 1/2"	REF PT
53	A53	30'-1"	14'-7 1/2"	REF PT
54	A54	29'-11"	9'-7"	REF PT
55	A55	30'-11 1/2"	10'-1 1/2"	REF PT
56	A56	36'-4 1/2"	11'-10"	REF PT
57	A57	17'-2"	8'-1"	REF PT
58	A58	29'-3 1/2"	40'-8"	REF PT
59	A59	41'-8"	37'-10"	REF PT

FOR REFERENCE ONLY

SURFACE MOUNT

© 2024 By Landscape Structures. All rights reserved.

DETAIL
TALK TUBE SIGN SM

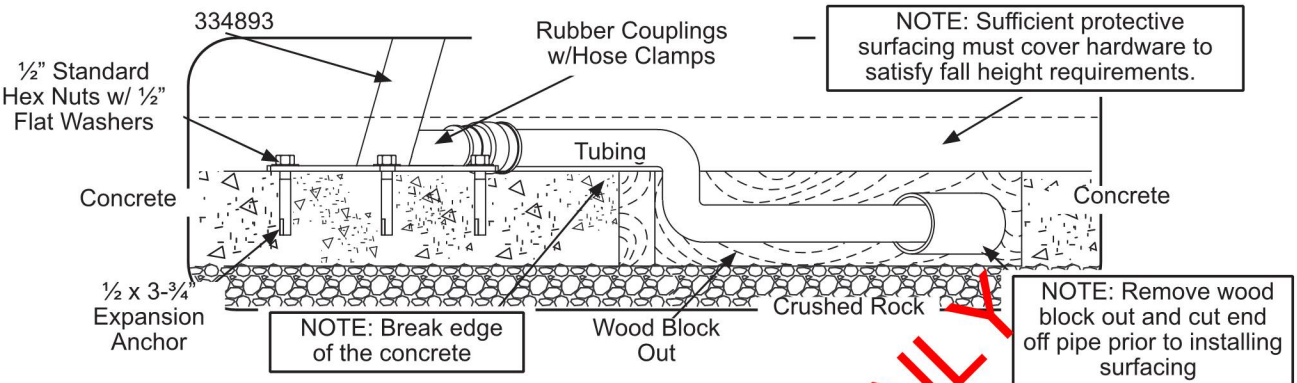

DETAIL
TALK TUBE SIGN SM

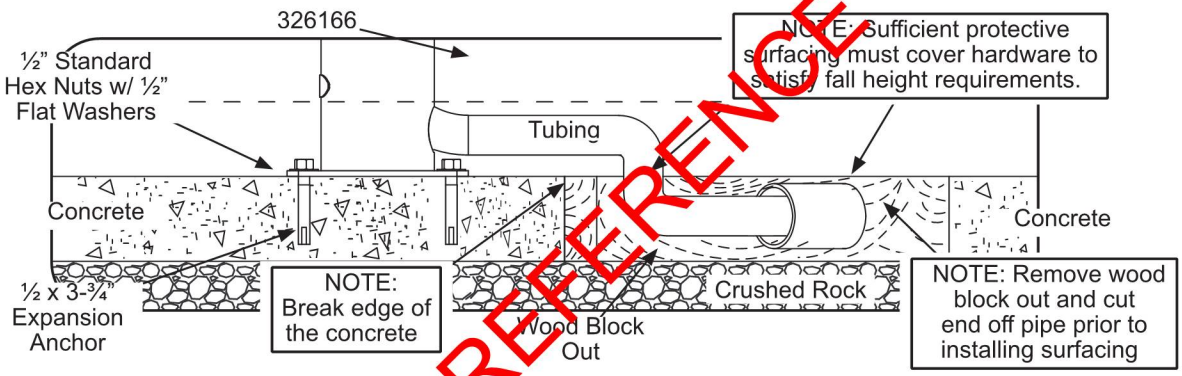

FOR REFERENCE ONLY

DETAIL
DIRECT BURY
TALK TUBE POST

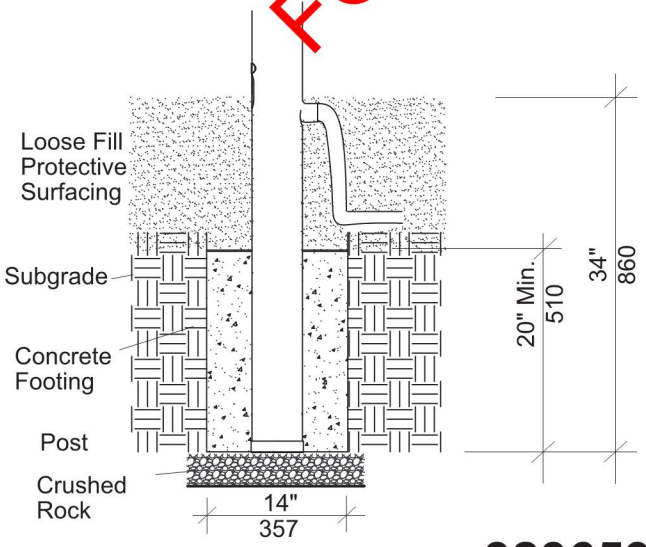

DETAIL
DIRECT BURY
TALK TUBE SIGN

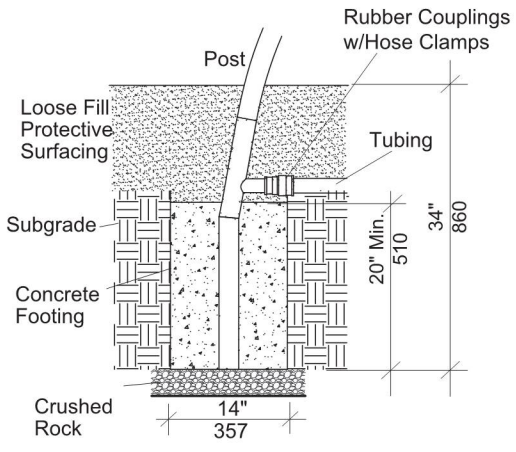

© 2024 By Landscape Structures. All rights reserved.

TRANSFER STEP

SURFACE MOUNT 2"

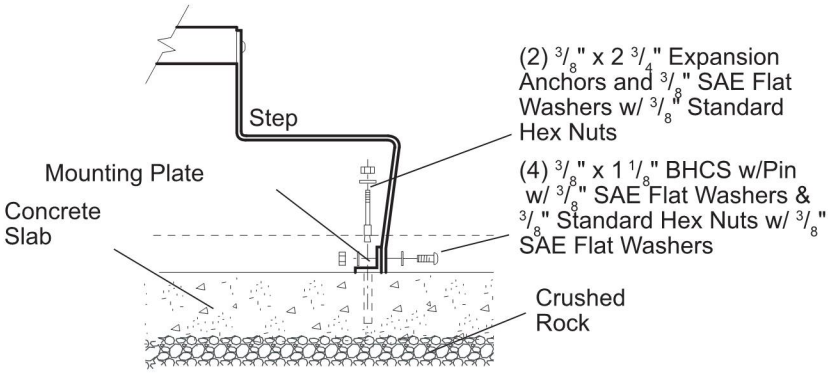

NOTE: Sufficient protective surfacing must cover hardware to satisfy fall height requirements.

DIRECT BURY

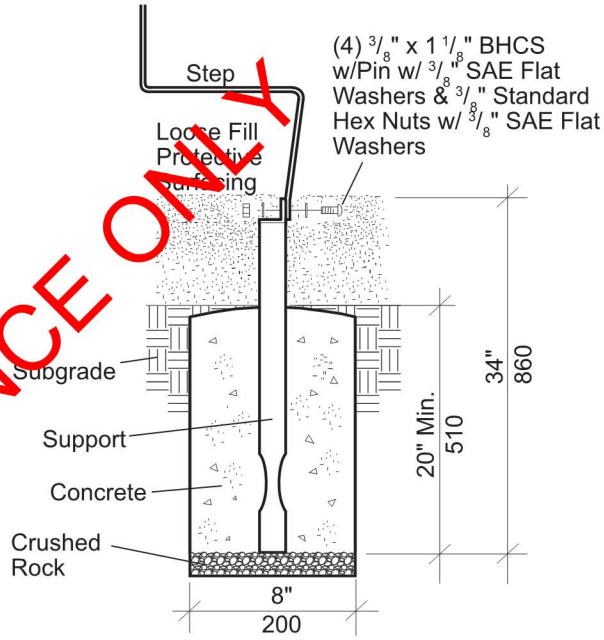

FOR REFERENCE ONLY

DETAIL
DIRECT BURY

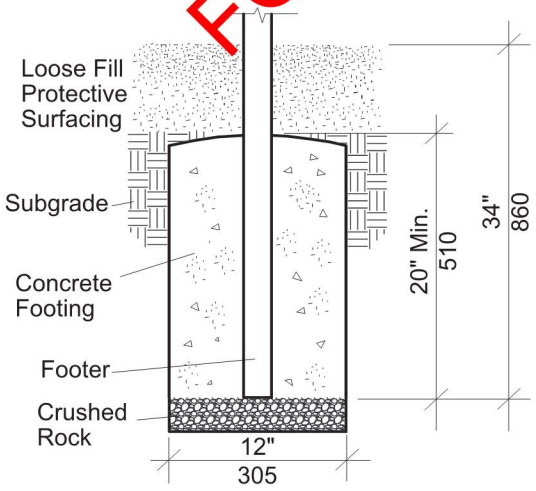

DETAIL
DIRECT BURY

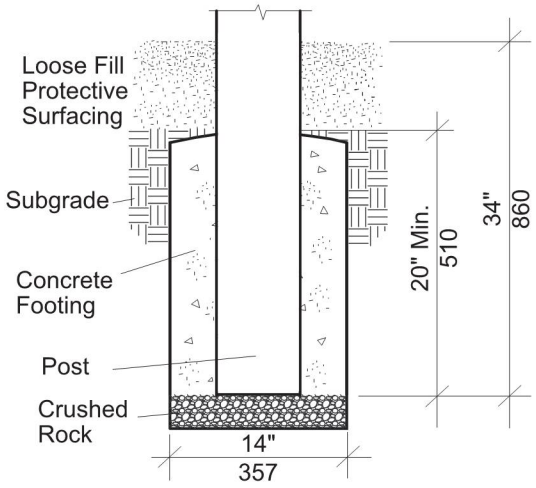

© 2024 By Landscape Structures. All rights reserved.

DETAIL
SURFACE MOUNT

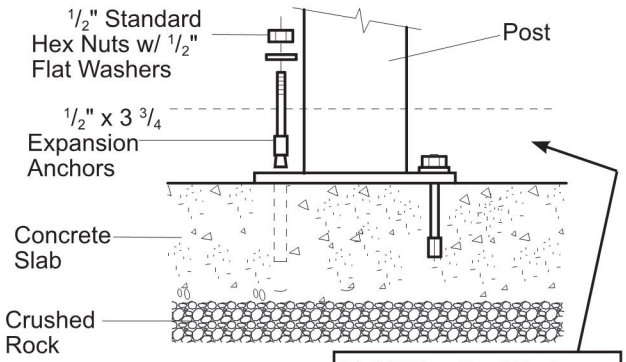

NOTE: Sufficient protective surfacing must cover hardware to satisfy fall height requirements.

DETAIL
SURFACE MOUNT
CHAIN CONN.

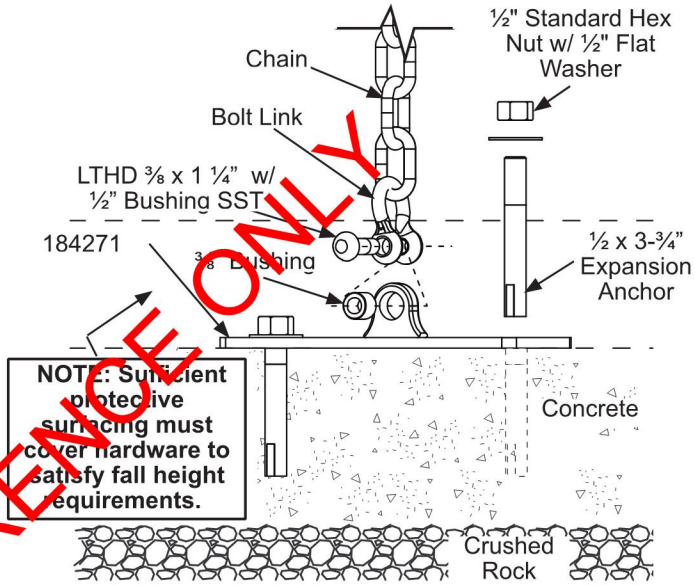

NOTE: Sufficient protective surfacing must cover hardware to satisfy fall height requirements.

FOR REFERENCE ONLY

DETAIL
SURFACE MOUNT

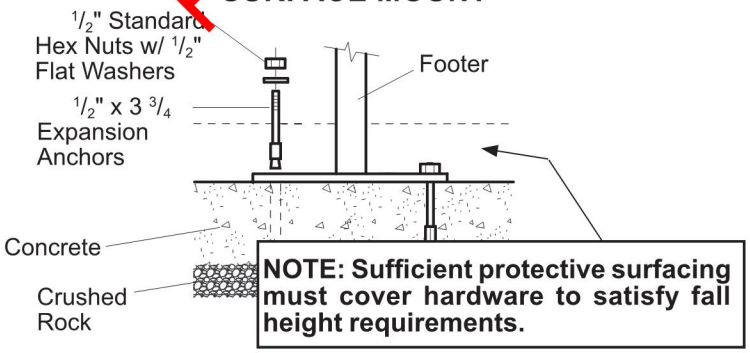

NOTE: Sufficient protective surfacing must cover hardware to satisfy fall height requirements.

© 2024 By Landscape Structures. All rights reserved.

DETAIL
DIRECT BURY

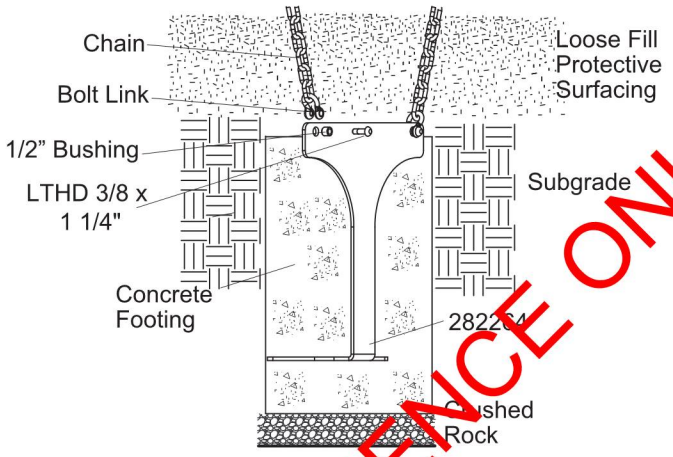

FOR REFERENCE ONLY

DETAIL
PLATE FOOTER ATTACHMENT

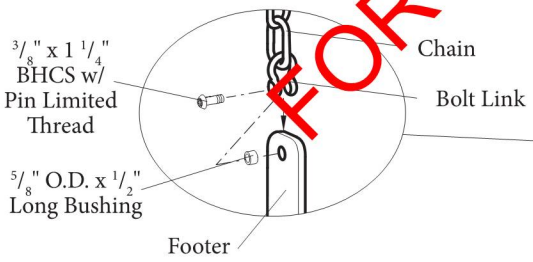

DETAIL
DIRECT BURY

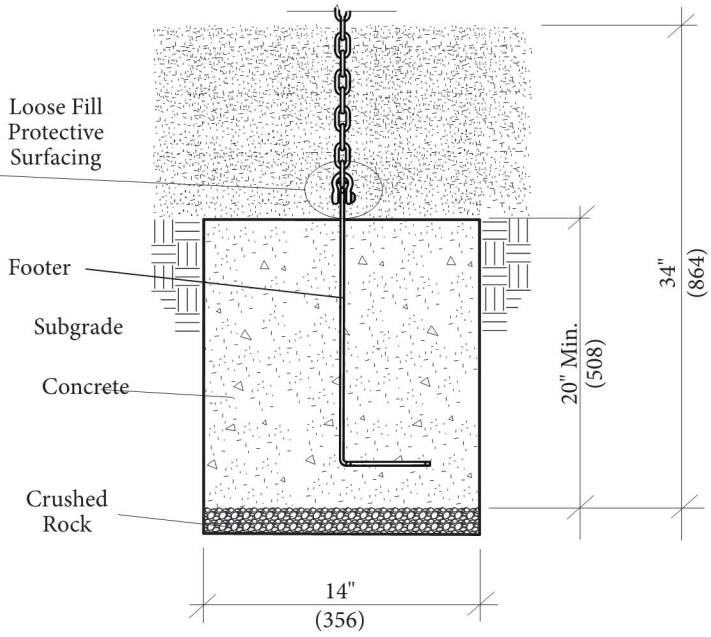

IMPORTANT! Tension ropes/nets before pouring concrete footings.

NOTE: The hole depth for the footer needs to be deep enough, so the footer plate does not contact the bottom of the hole. The weight of the concrete will force the footer plate down, further tightening the cable.

© 2024 By Landscape Structures. All rights reserved.

landscape structures®

DETAIL
STL CLAMP REG. POST

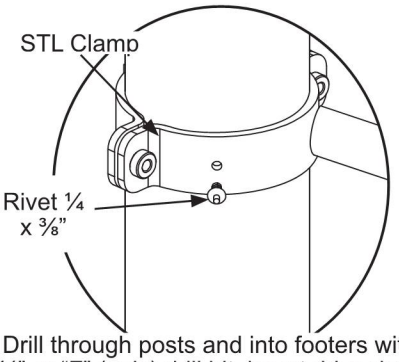

Drill through posts and into footers with a ¼” or “F” (only) drill bit, insert drive rivet in hole through posts and into footers. Hammer drive rivet pin in until flush with head.

FOR REFERENCE ONLY

DETAIL
AL CLAMP REG. POST

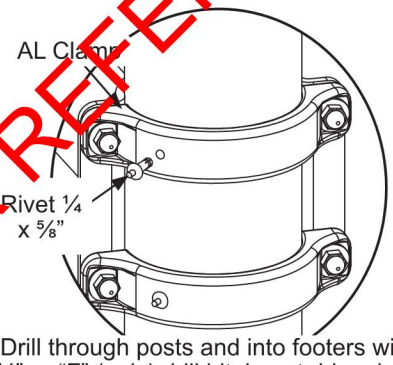

Drill through posts and into footers with a ¼” or “F” (only) drill bit, insert drive rivet in hole through posts and into footers. Hammer drive rivet pin in until flush with head.

© 2024 By Landscape Structures. All rights reserved.

SEEK AND FIND PANEL
TALK TUBE

DETAIL
TALK BARRIER

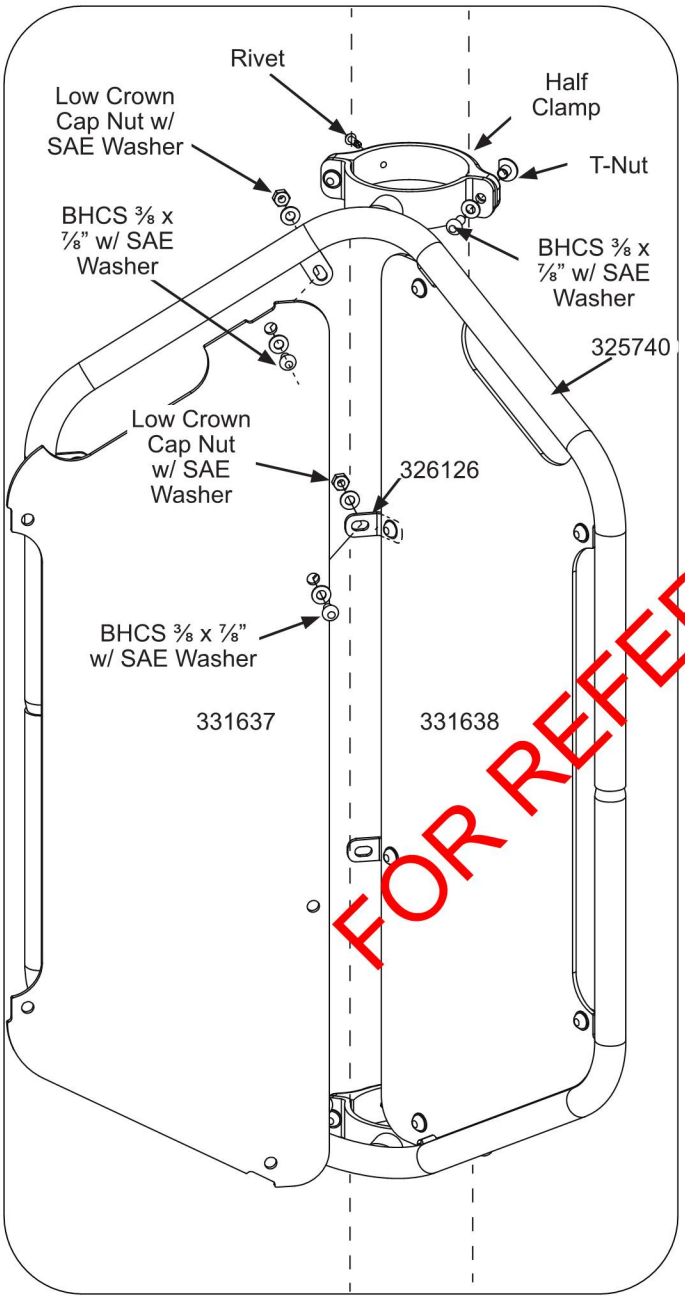

Note: The hole in the post must be centered with the barrier

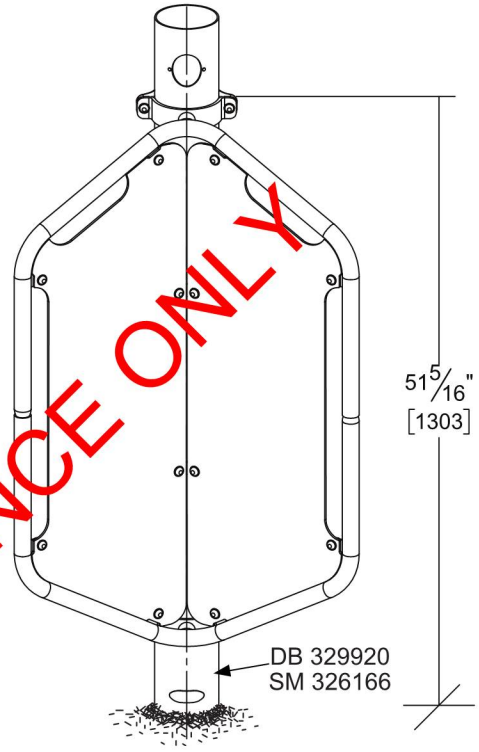

FOR REFERENCE ONLY

© 2024 By Landscape Structures. All rights reserved.

POST, DECKS AND BRACES

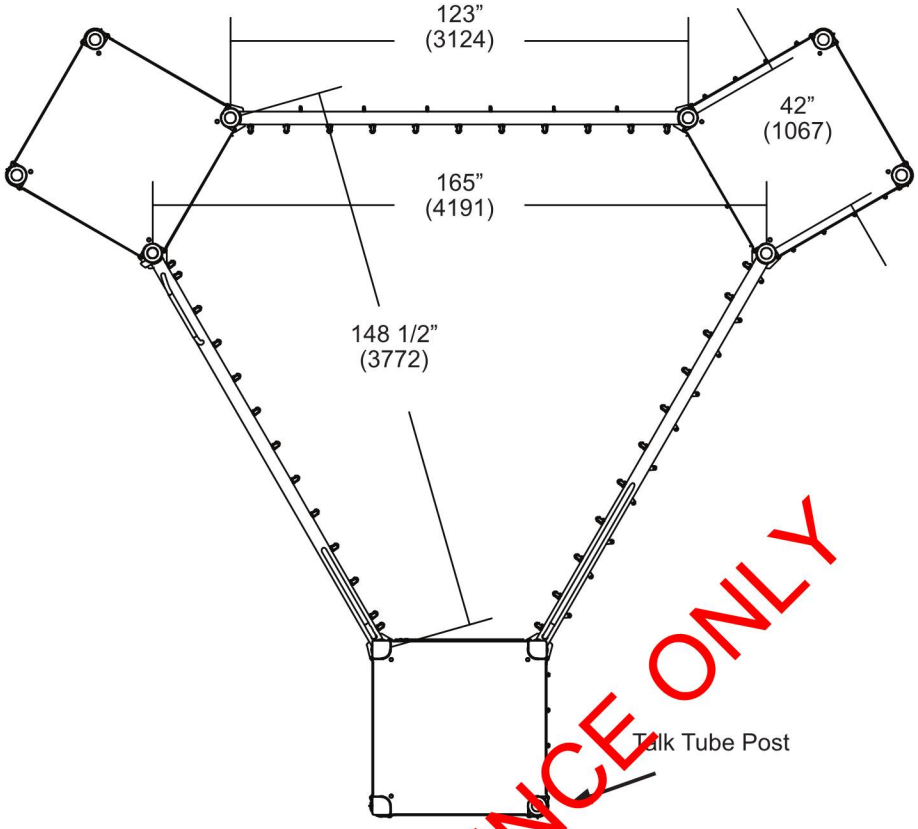

FOR REFERENCE ONLY

DETAIL DECK/BRACE

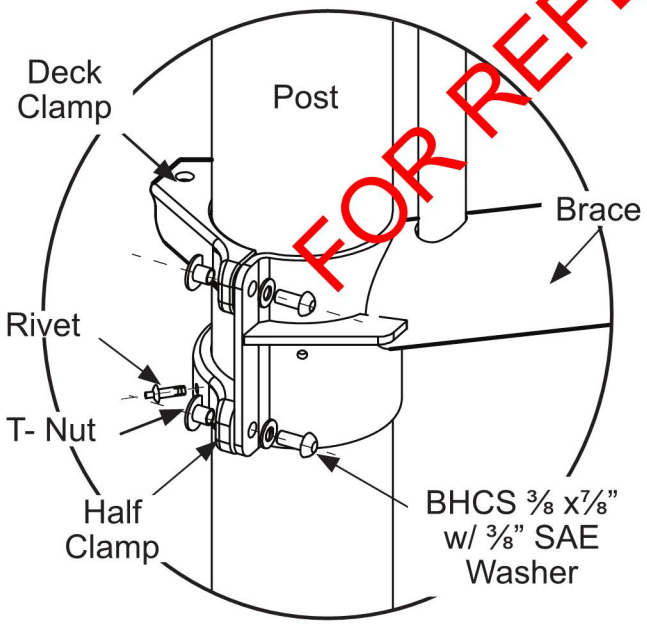

DETAIL DECK HANGER CLAMP

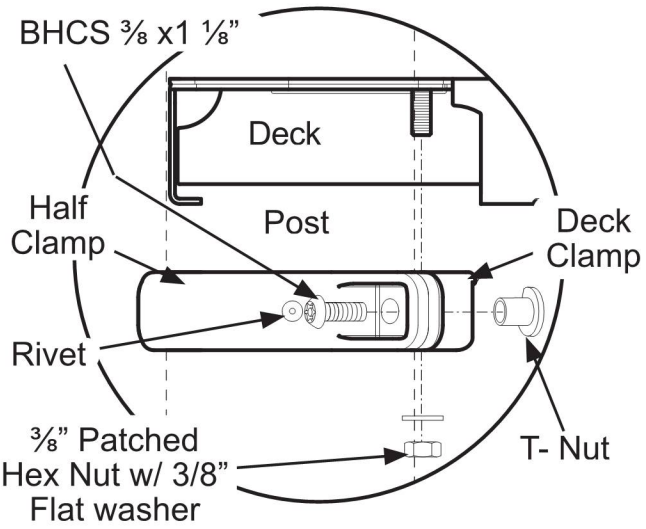

© 2024 By Landscape Structures. All rights reserved.

POST, DECKS AND BRACES

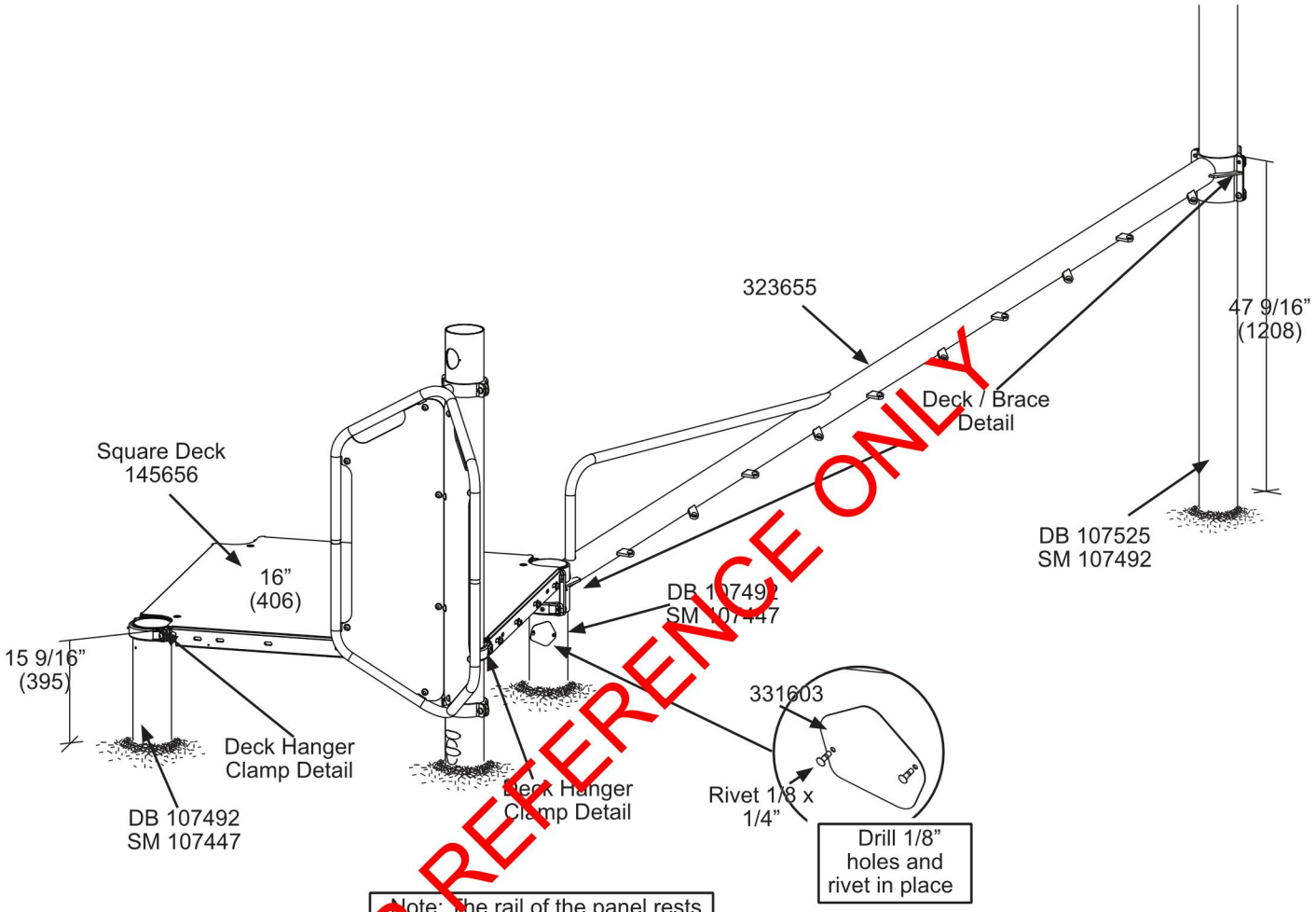

FOR REFERENCE ONLY

© 2024 By Landscape Structures. All rights reserved.

POST, DECKS AND BRACES

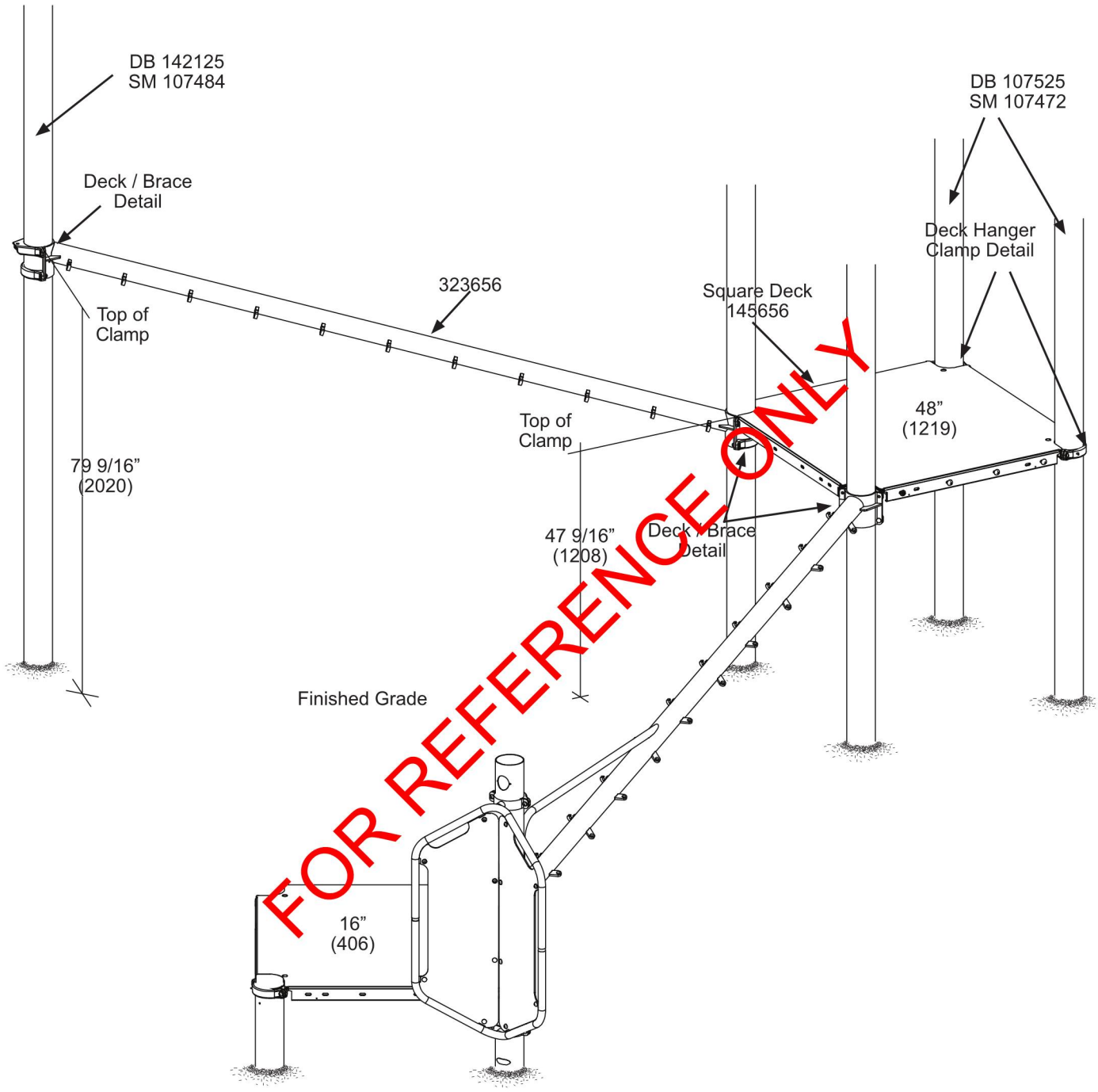

FOR REFERENCE ONLY

601 7TH STREET SOUTH, DELANO, MINNESOTA 55328-8605 888-574-4678 LSI Install Help 888-438-6574 LSI Direct 763-972-5200 Int. FAX (763) 972-3185

© 2024 By Landscape Structures. All rights reserved.

POST, DECKS AND BRACES

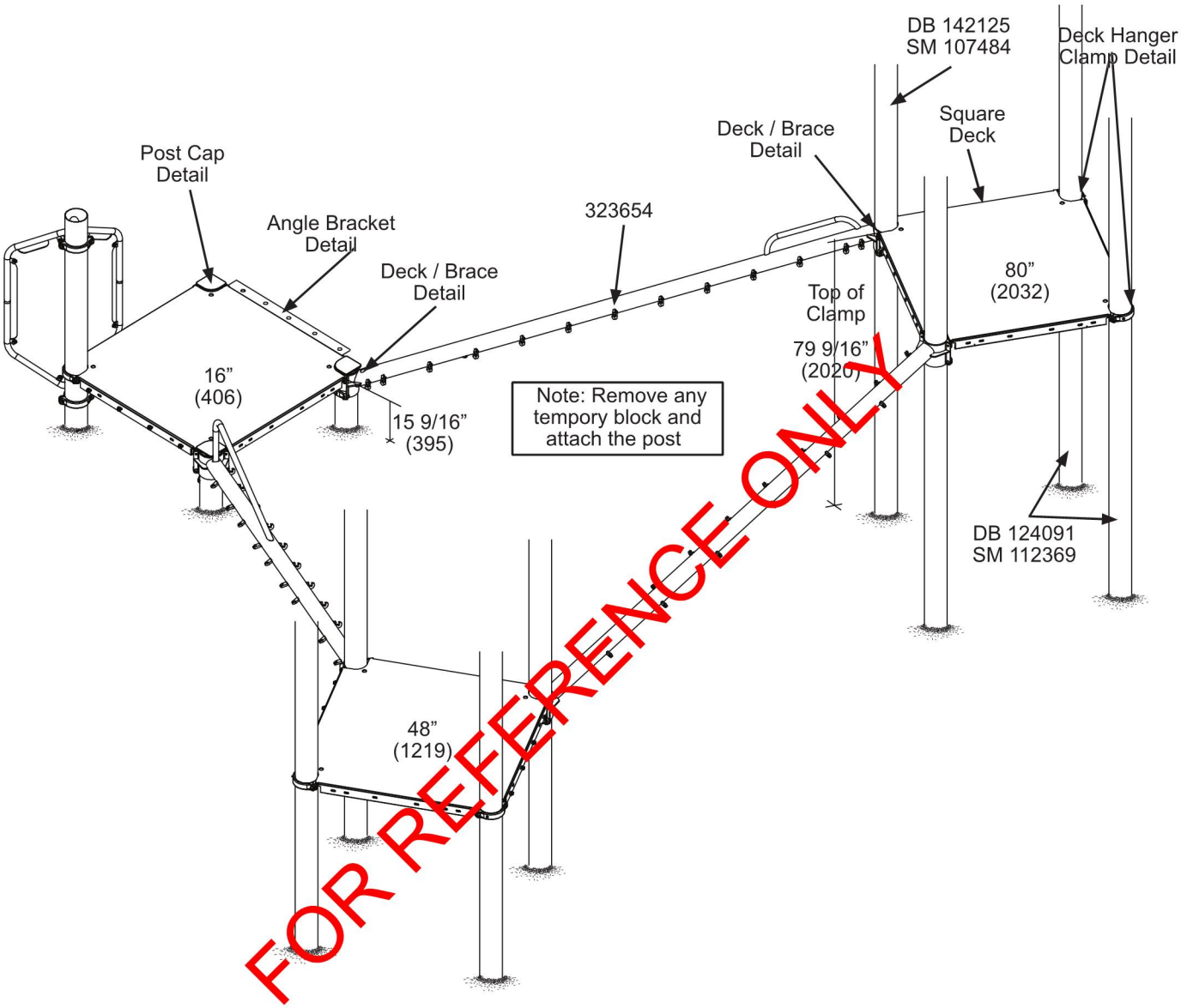

FOR REFERENCE ONLY

DETAIL
ANGLE BRACKET

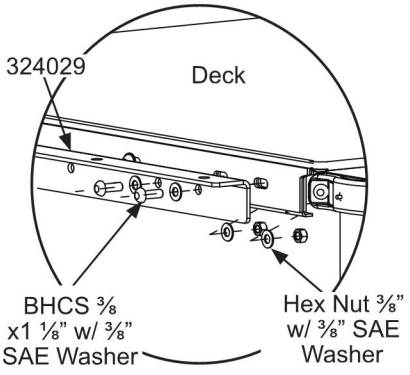

601 7TH STREET SOUTH, DELANO, MINNESOTA 55328-8605 888-574-4678 LSI Install Help 888-438-6574 LSI Direct 763-972-5200 Int. FAX (763) 972-3185

© 2024 By Landscape Structures. All rights reserved.

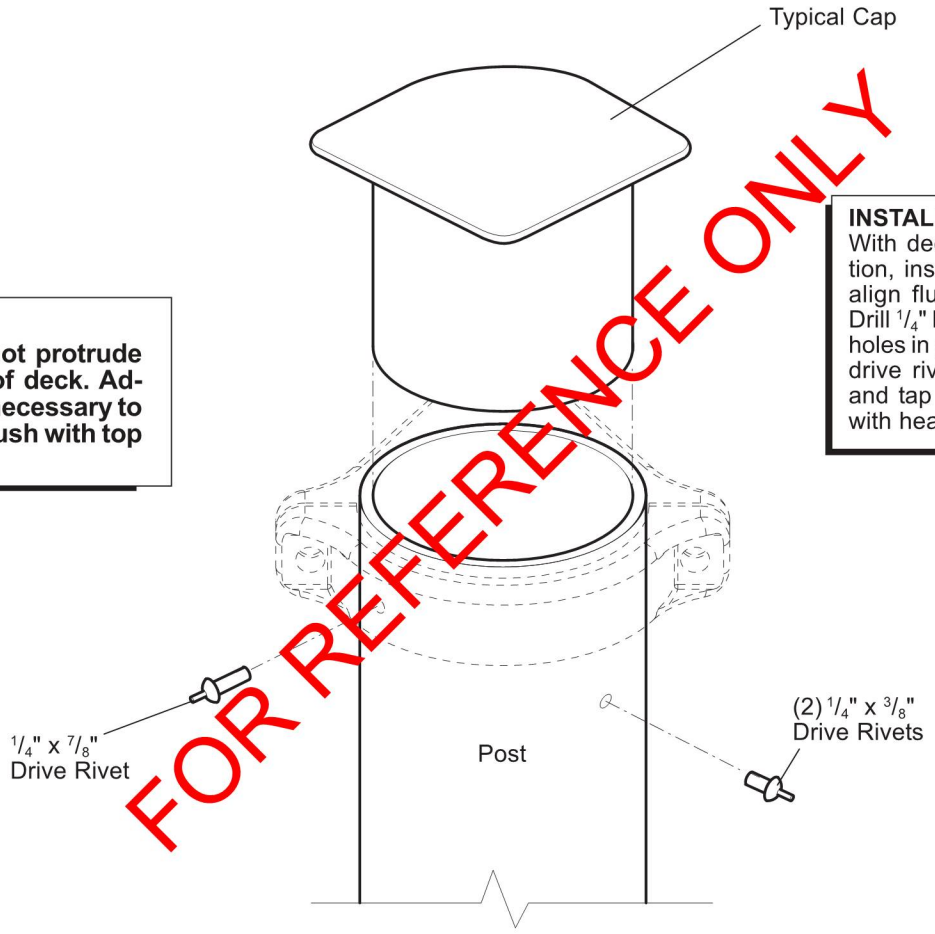

NOTE:
Cap must not protrude above top of deck. Adjust post if necessary to make cap flush with top of deck.

INSTALLATION:
With deck and posts in position, insert cap into post and align flush with top of deck. Drill 1/4" holes into cap through holes in post and clamp. Insert drive rivets into drilled holes and tap pin in until it is flush with head.

FOR REFERENCE ONLY

© 2024 By Landscape Structures. All rights reserved.

POST, DECKS AND BRACES

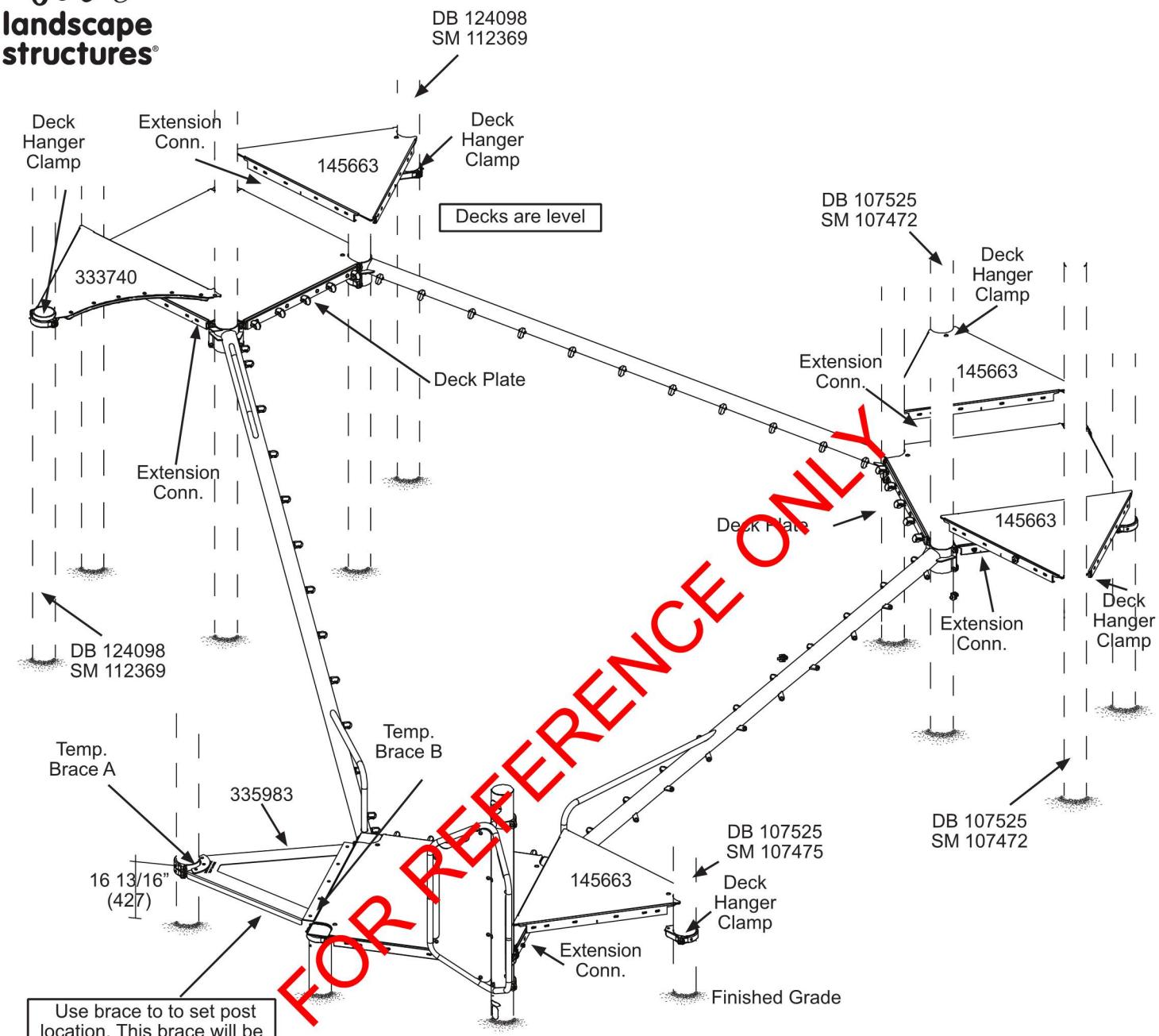

FOR REFERENCE ONLY

© 2024 By Landscape Structures. All rights reserved.

DETAIL DECK PLATE

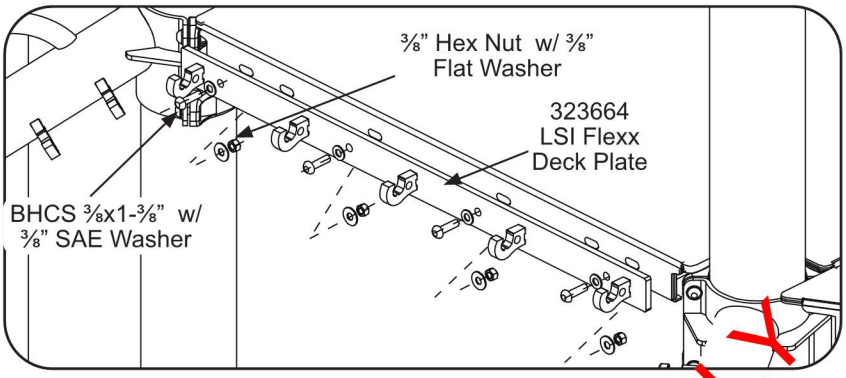

FOR REFERENCE ONLY

DETAIL EXTENSION CONN.

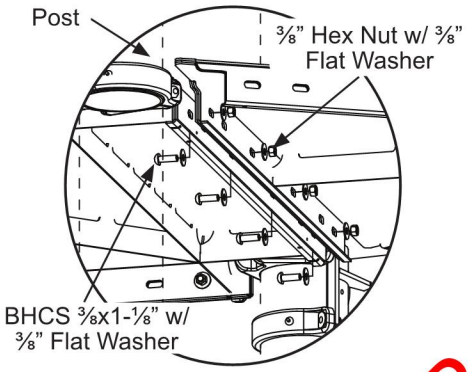

DETAIL DECK HANGER CLAMP

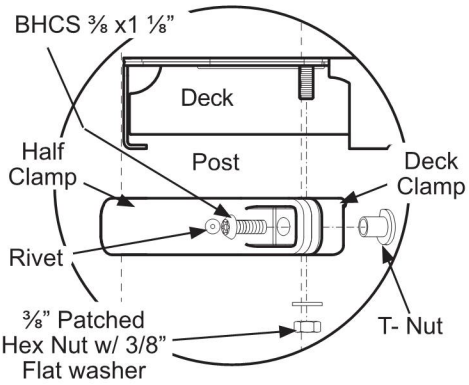

DETAIL TEMP. BRACE A

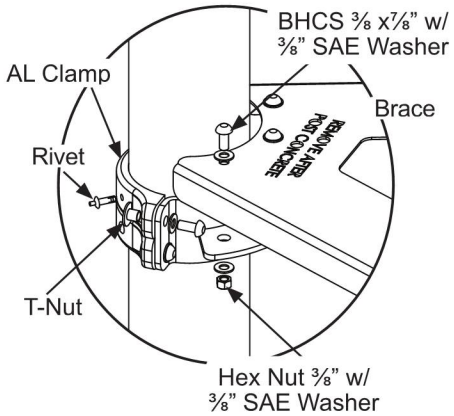

DETAIL TEMP BRACE B

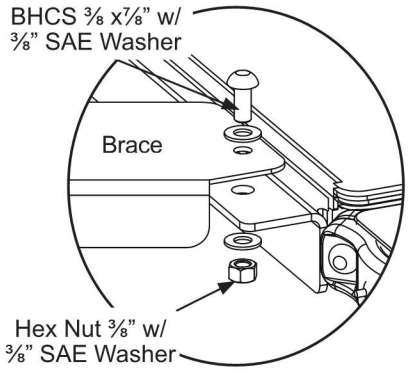

© 2024 By Landscape Structures. All rights reserved.

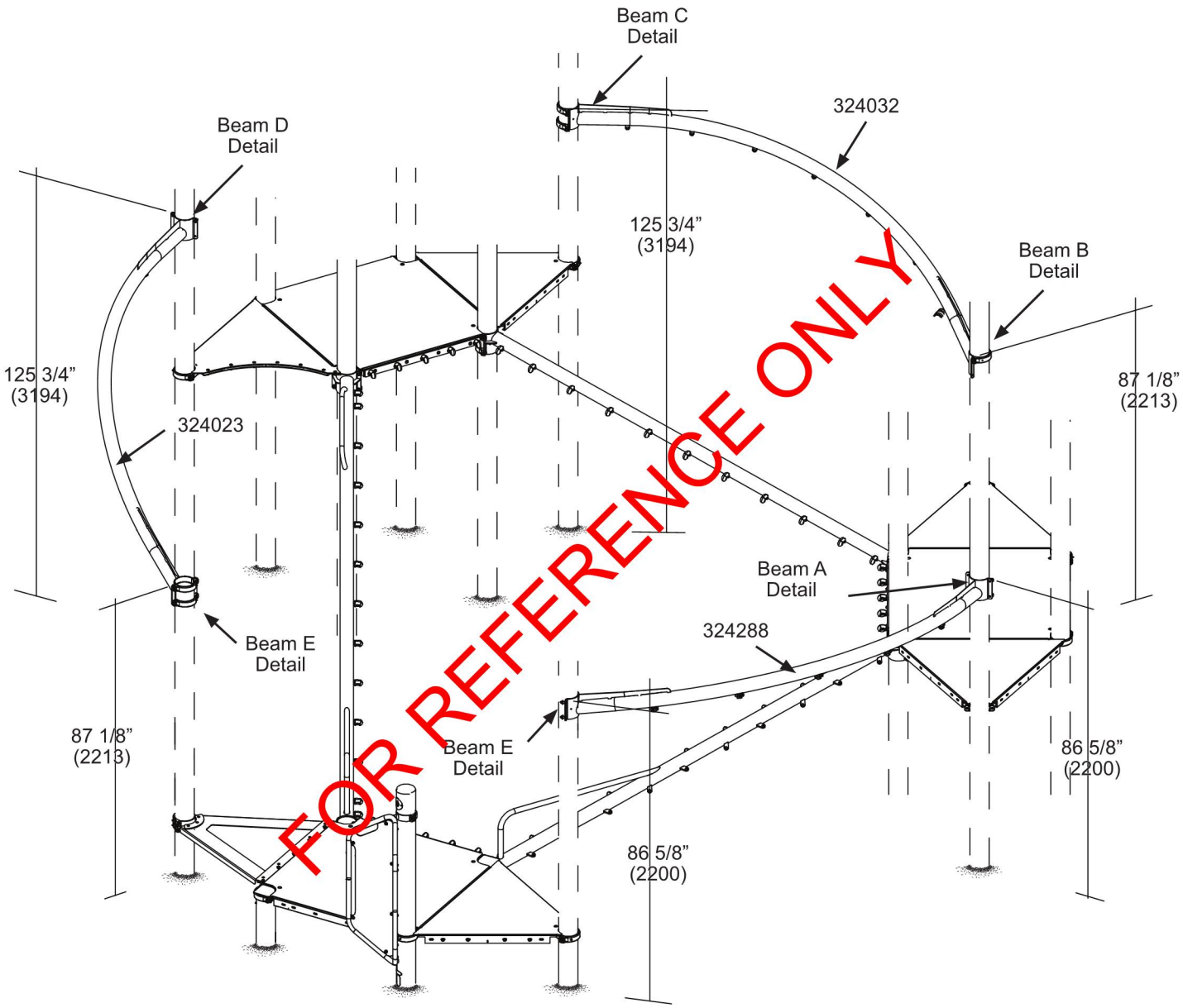

FOR REFERENCE ONLY

© 2024 By Landscape Structures. All rights reserved.

DETAIL BEAM A

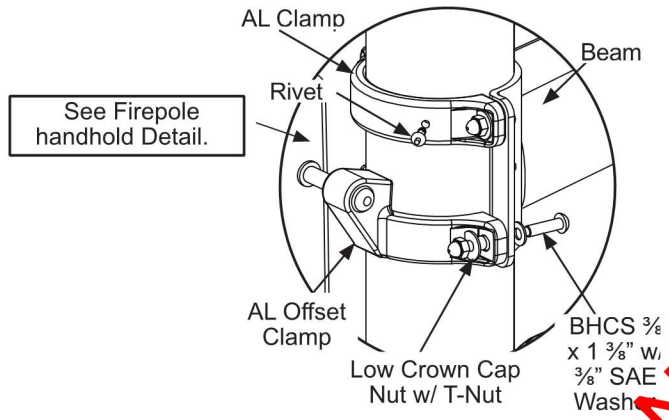

DETAIL BEAM B

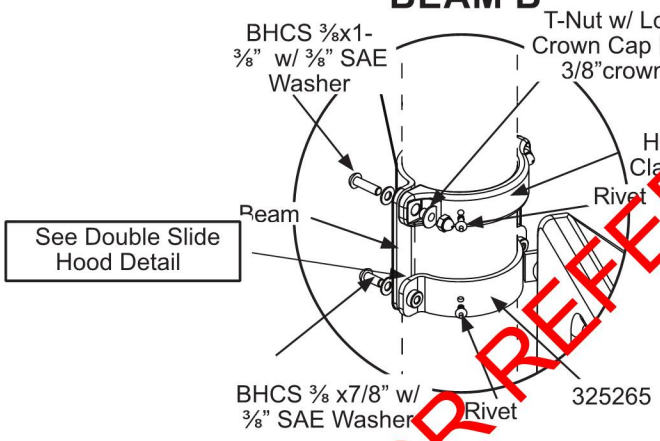

DETAIL BEAM C

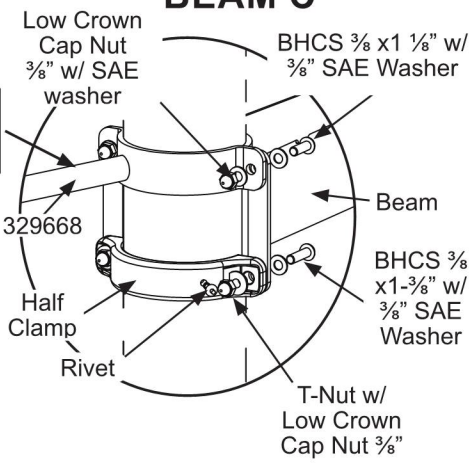

DETAIL BEAM D

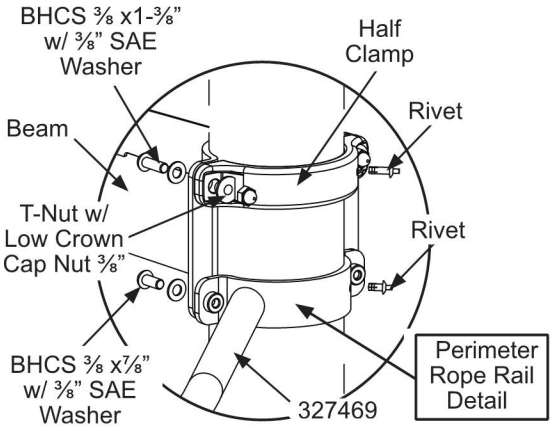

DETAIL BEAM E

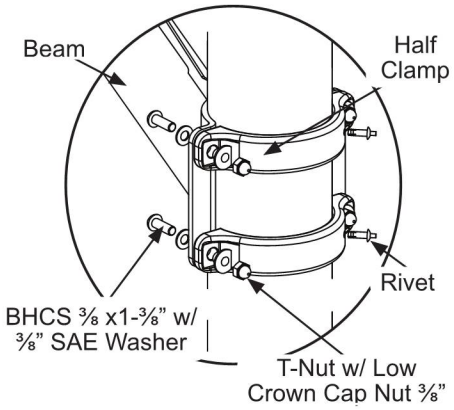

FOR REFERENCE ONLY

© 2024 By Landscape Structures. All rights reserved.

LSI FLEXX CLIMBER

Place 20mm cable portion of the flexx net in noted locations. The single line will indicate where the cable shall line up with the hook. Once the four locations are in place see Flexx cap connection detail and secure the cable locations.

The corners are indicated by the double line, 2 painted lines on the 20mm cable. The double line will be between the two 7mm loop connections. The double line positions the Cable between the hooks on the deck plate and the hooks on the support rails. See Top-down diagram for further details.

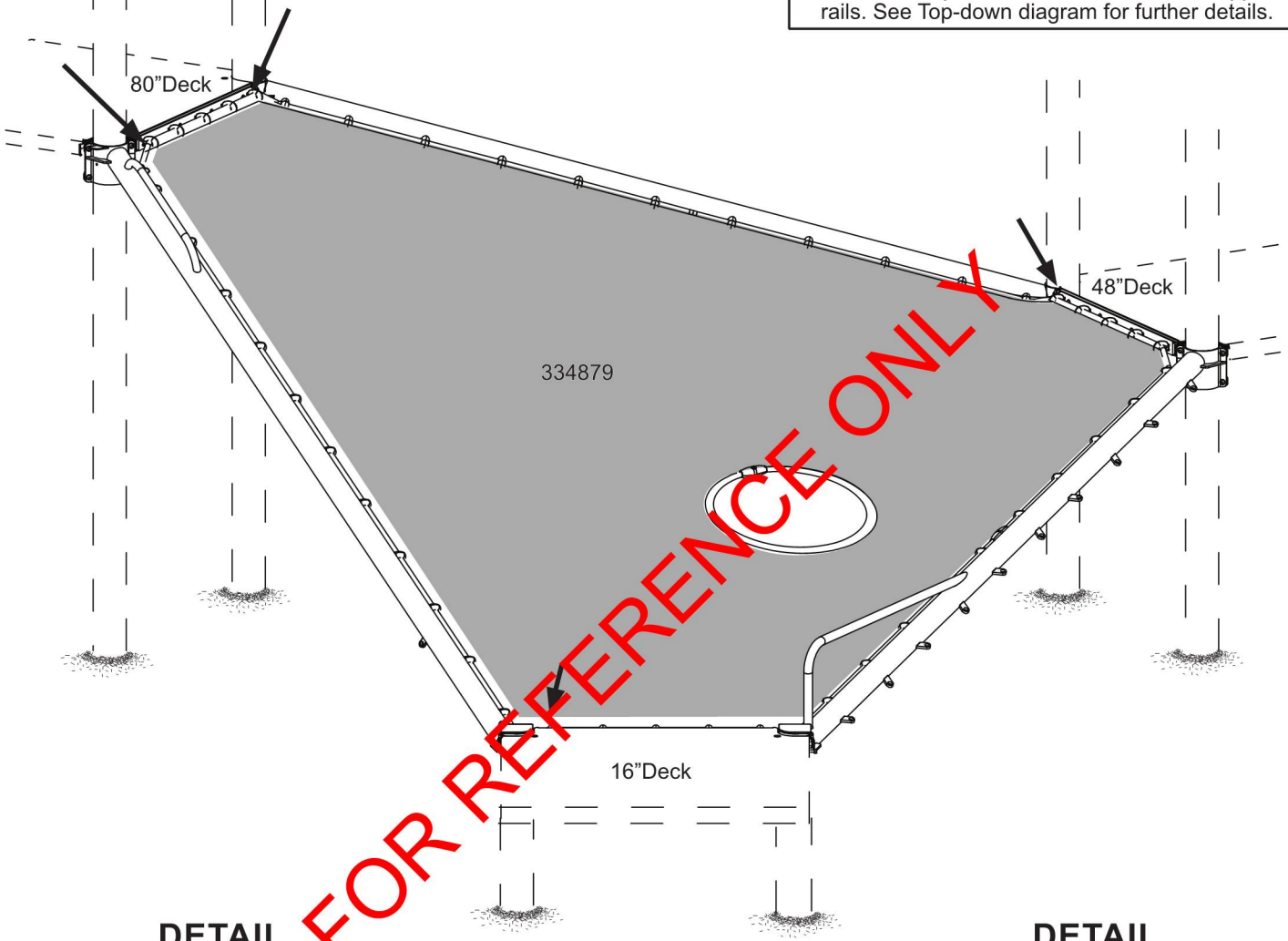

FOR REFERENCE ONLY

DETAIL LOOSE FLEXX CONN.

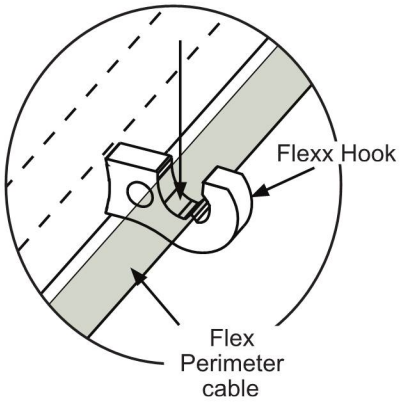

DETAIL FLEXX CAP CONN.

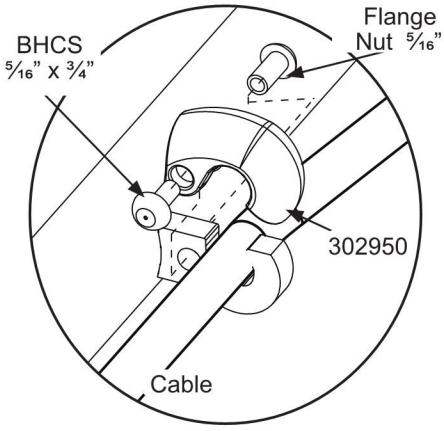

© 2024 By Landscape Structures. All rights reserved.

landscape structures®

LSI FLEXX CLIMBER

TOP DOWN LAYOUT

The corners are indicated by the double line, 2 painted lines on the 20mm cable. The double line will be between the two 7mm loop connections. The double line positions the cable between the hooks on the deck plate and the hooks on the support rails. See Top-down diagram for further details.

The single painted lines are a guide to where the cables should be attached to the hooks. The lines may not line up based on the variance caused by stretching of the cables.

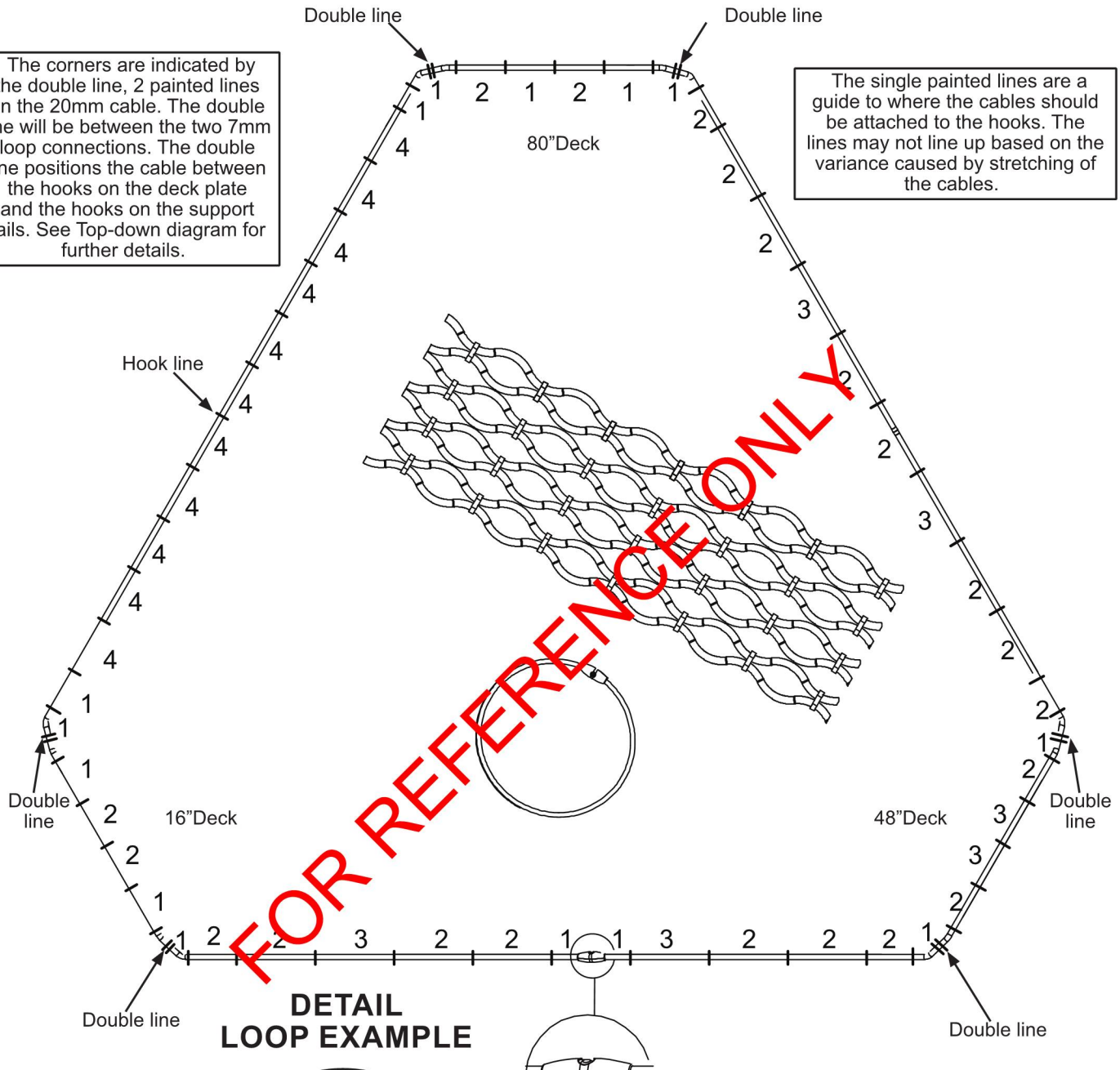
Double line
Double line
80”Deck
Hook line
16”Deck
48”Deck
Double line
Double line
Double line
Double line
1 2 1 2 1 1
1 4 4 4

LSI FLEXX CLIMBER

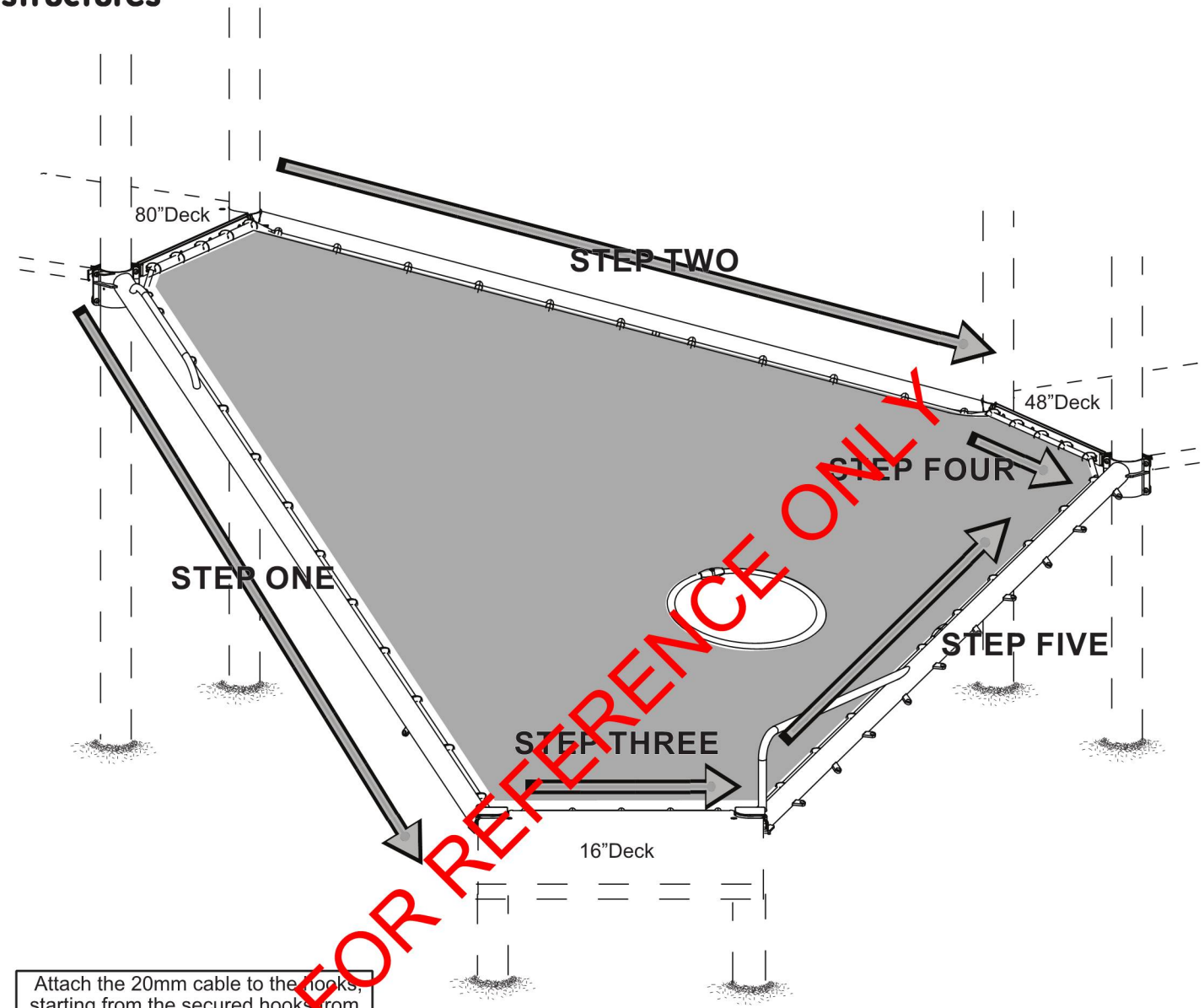

FOR REFERENCE ONLY

Attach the 20mm cable to the hooks, starting from the secured hooks from the previous step. Loose connect the cable without placing caps. The net may need to be adjusted to get all the hooks on. The use of bar clamps may be necessary. Be sure to protect painted surfaces from clamp marks. Leave Flexx caps off until an initial clamped hook location is reached. Once the step is finished hooks can get the caps installed. Move to the next step and repeat until finished.

© 2024 By Landscape Structures. All rights reserved.

landscape structures®

PERIMETER ROPE

DETAIL CAP CLAMP

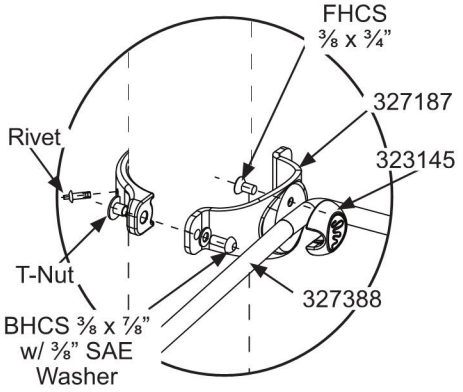

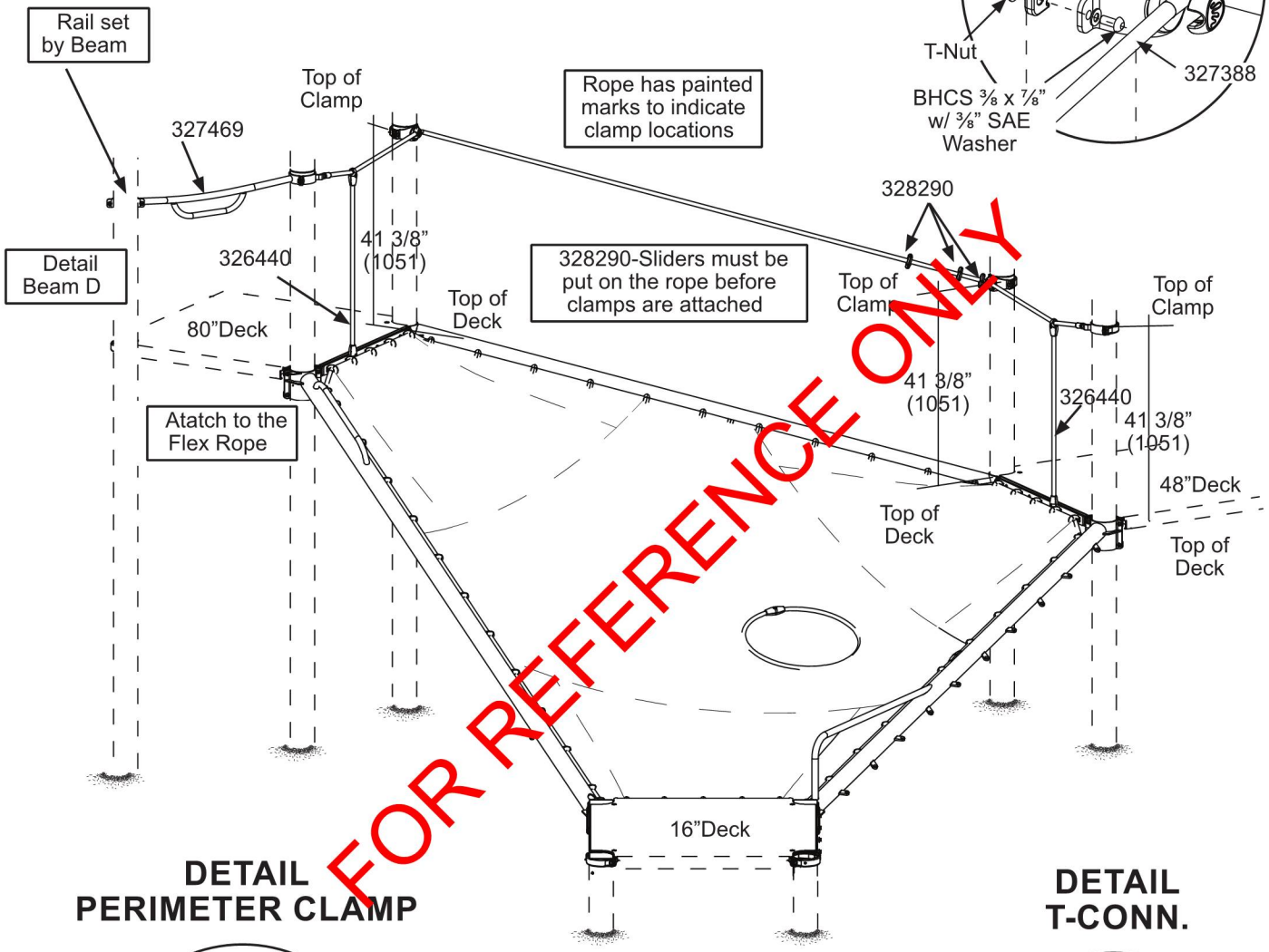

FOR REFERENCE ONLY

DETAIL PERIMETER CLAMP

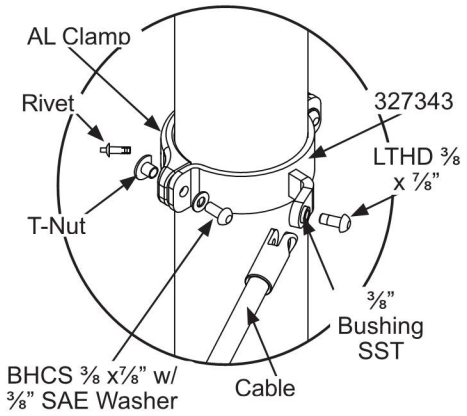

DETAIL T-CONN.

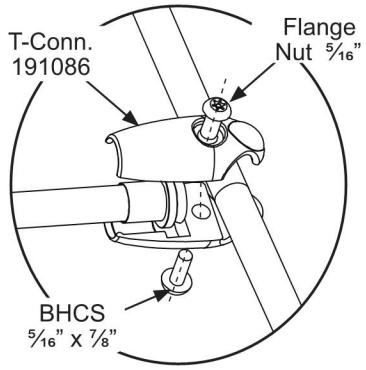

© 2024 By Landscape Structures. All rights reserved.

landscape structures®

TRANSFER STEP

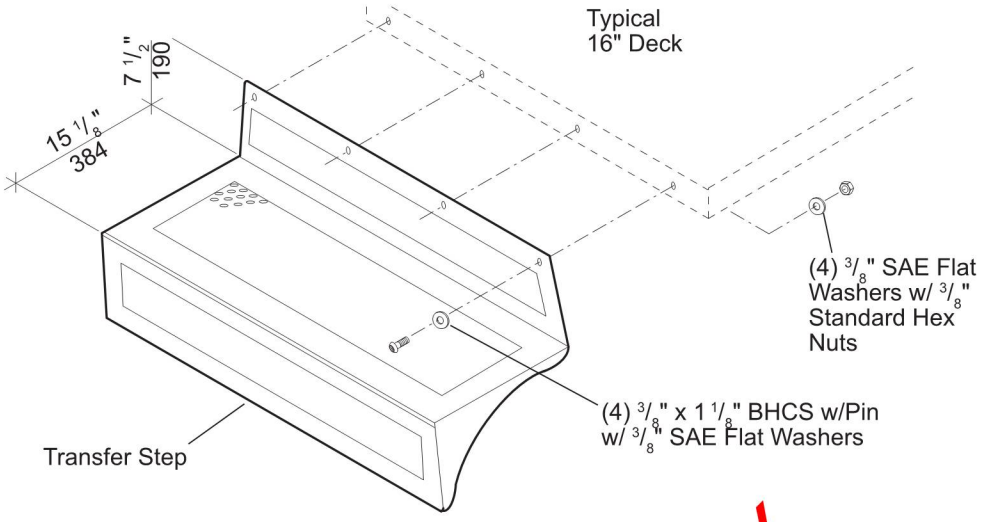

AN/FOOTING LAYOUT

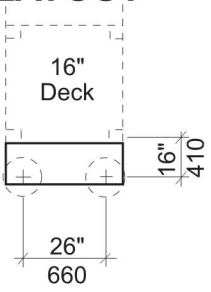

FOR REFERENCE ONLY

SURFACE MOUNT 2"

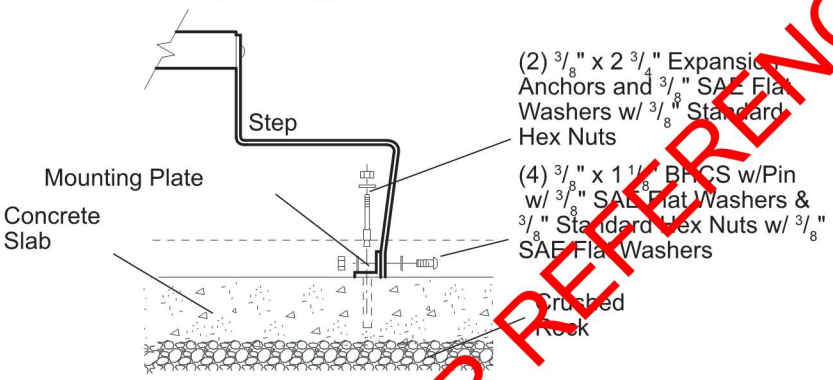

NOTE: Sufficient protective surfacing must cover hardware to satisfy fall height requirements.

DIRECT BURY

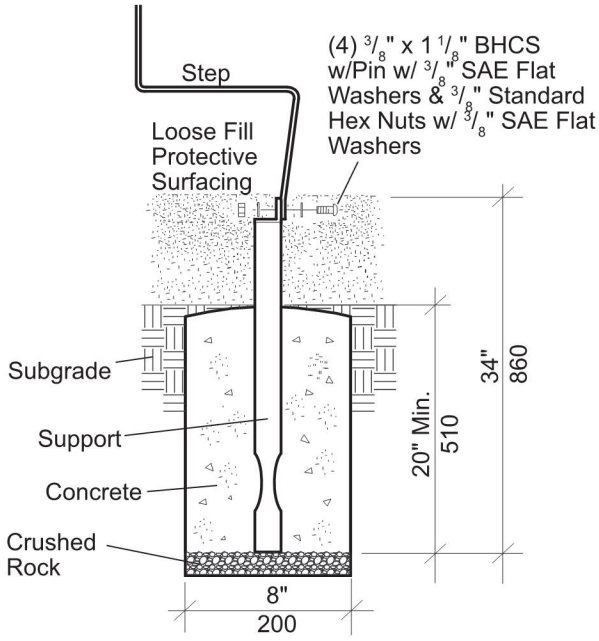

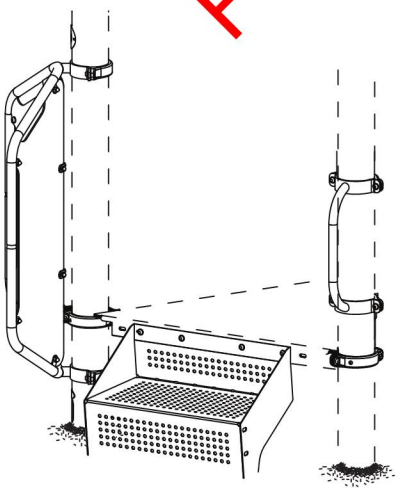

© 2024 By Landscape Structures. All rights reserved.

INCLINED BELT BRIDGE

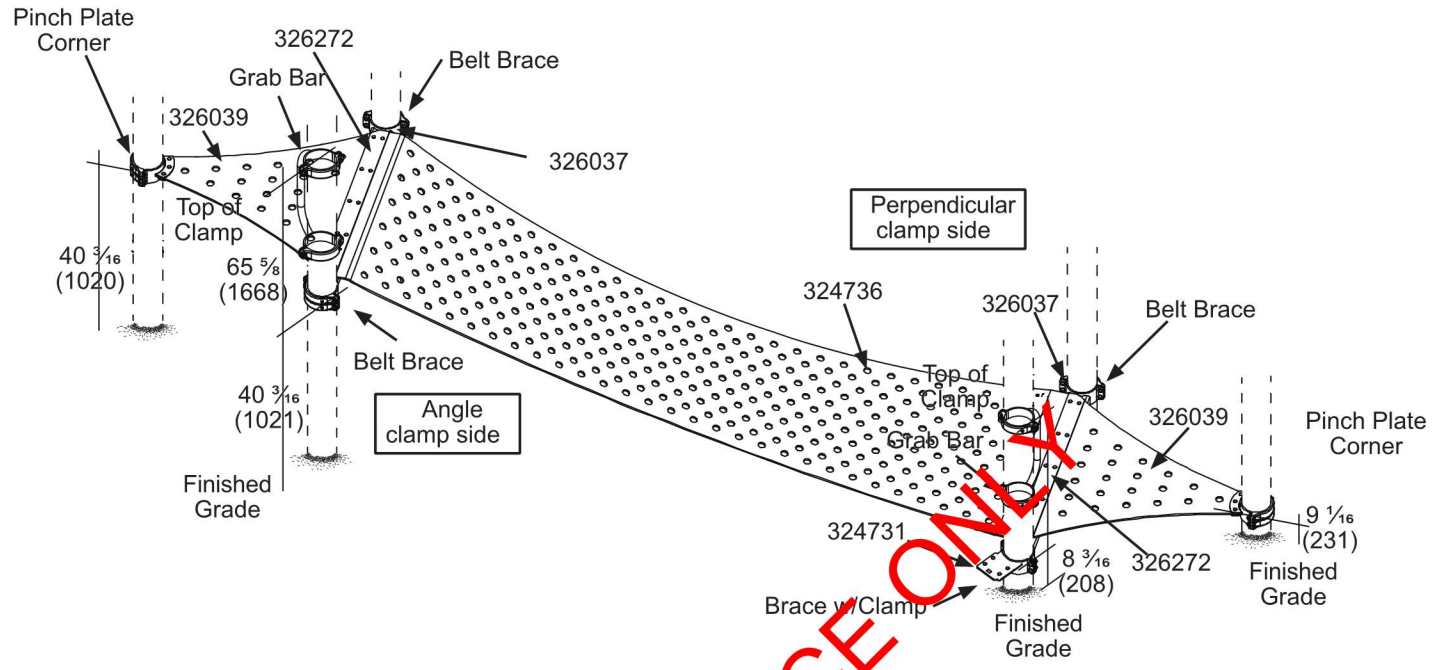

FOR REFERENCE ONLY

DETAIL PINCH PLATE CORNER

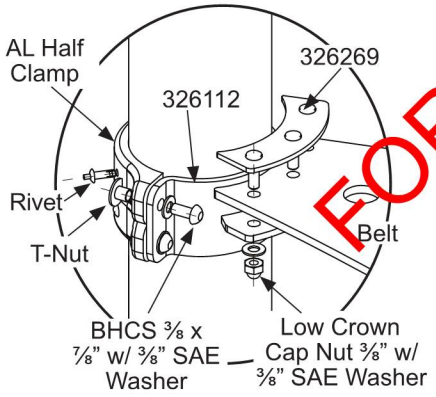

DETAIL BELT BRACE

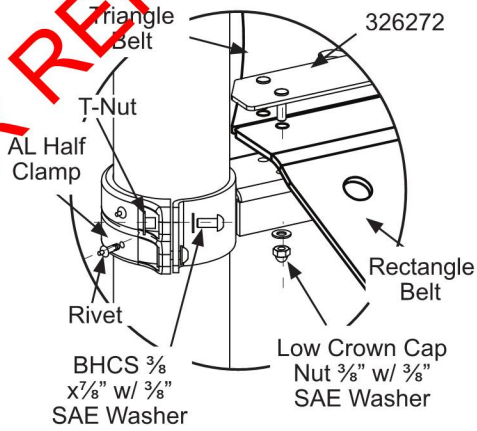

DETAIL BRACE W/ CLAMP

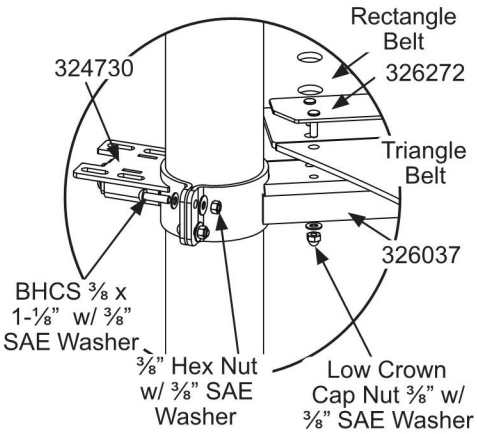

© 2024 By Landscape Structures. All rights reserved.

SLACK LINES

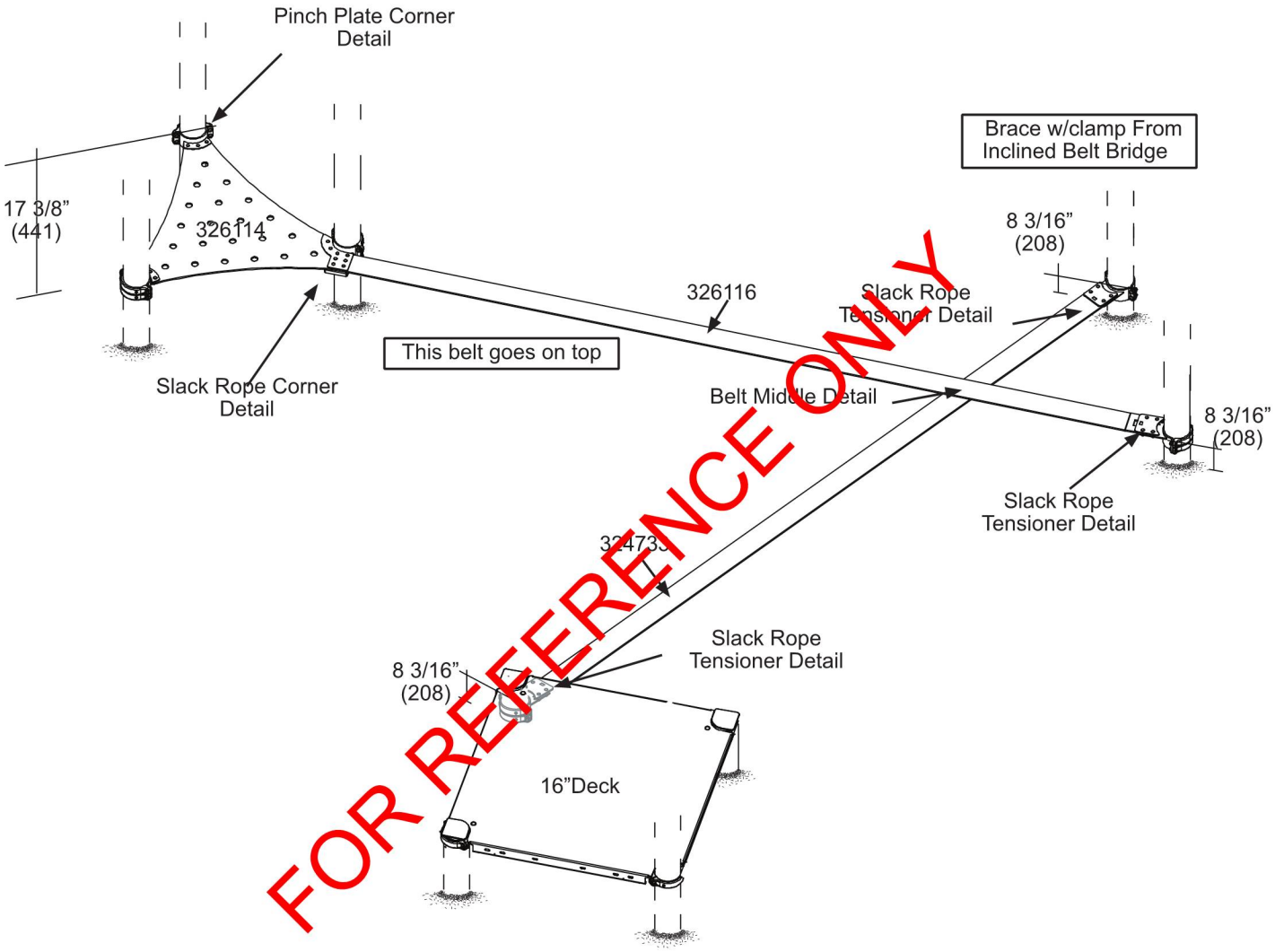

FOR REFERENCE ONLY

© 2024 By Landscape Structures. All rights reserved.

SLACK LINES

DETAIL
TRI BELT CLAMP

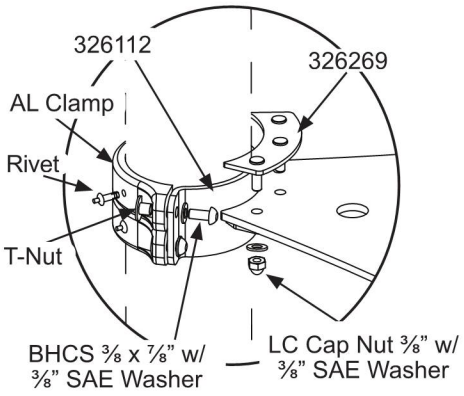

DETAIL
BELT MIDDLE

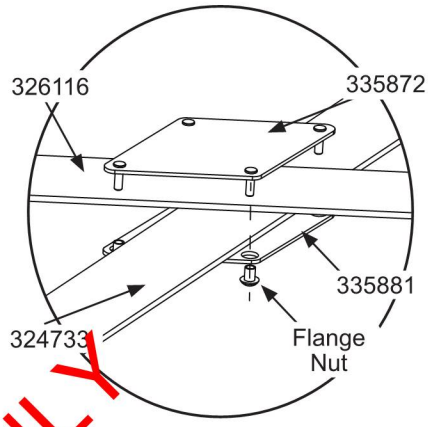

DETAIL
SLACK ROPE TENSIONER

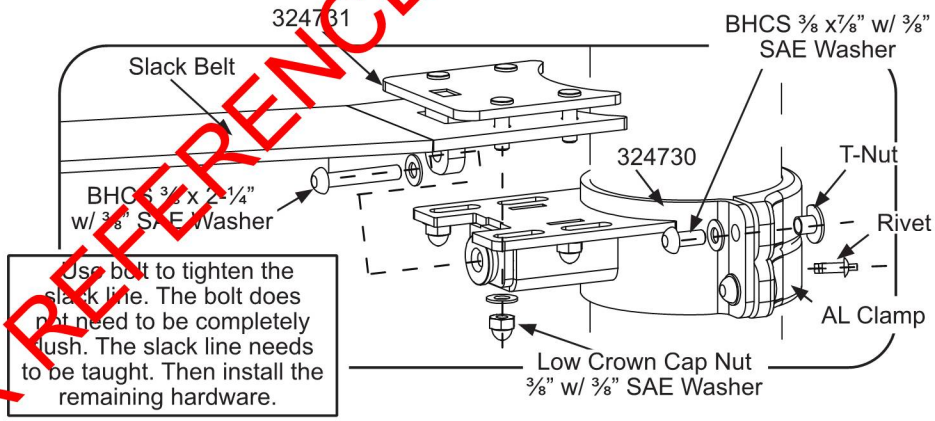

Use bolt to tighten the slack line. The bolt does not need to be completely flush. The slack line needs to be taught. Then install the remaining hardware.

FOR REFERENCE ONLY

DETAIL
SLACK ROPE CORNER

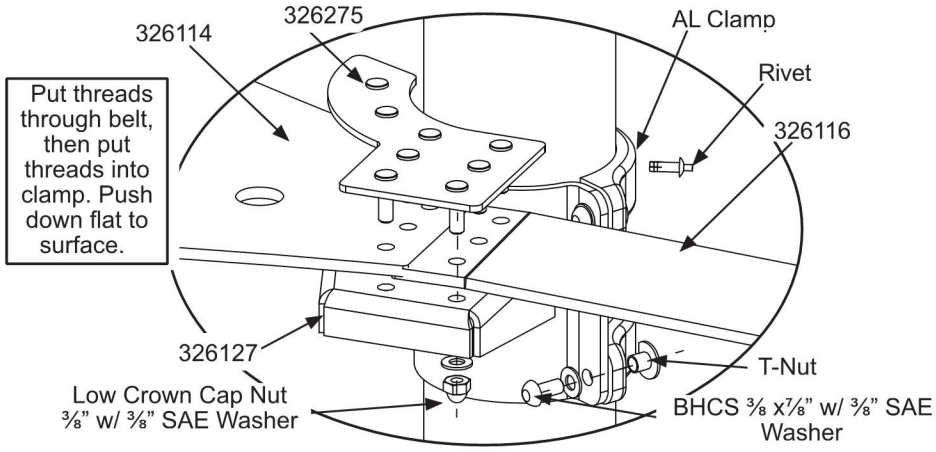

Put threads through belt, then put threads into clamp. Push down flat to surface.

© 2024 By Landscape Structures. All rights reserved.

FIREPOLE

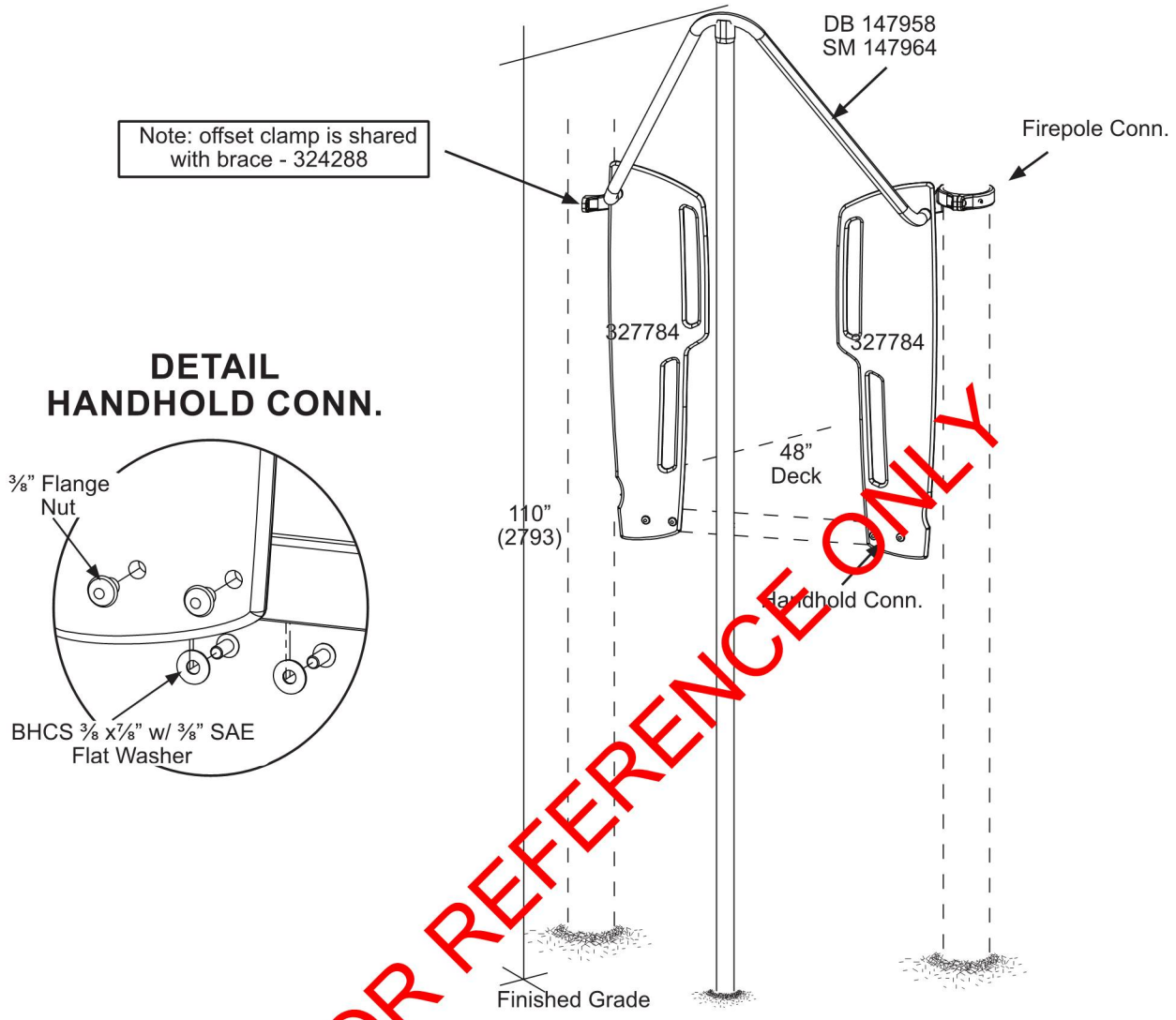

DETAIL HANDHOLD CONN.

FOR REFERENCE ONLY

DETAIL FIREPOLE CONN.

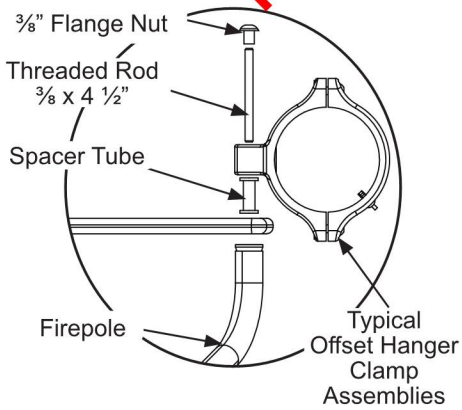

The outside edge of the pod must be greater than 20” from the edge of the firepole.

TOP DOWN VIEW

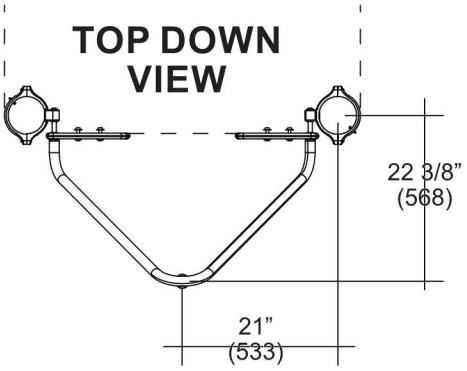

© 2024 By Landscape Structures. All rights reserved.

CORKSCREW

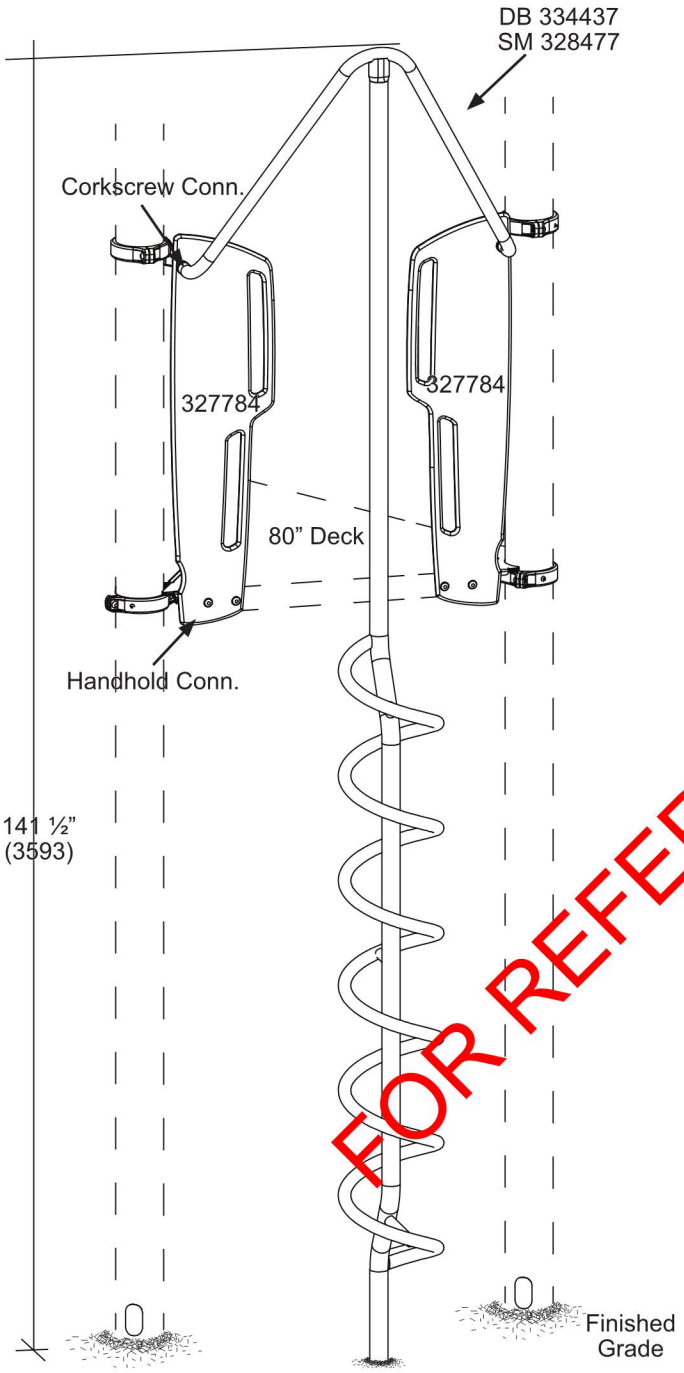

DETAIL CORKSCREW CONN.

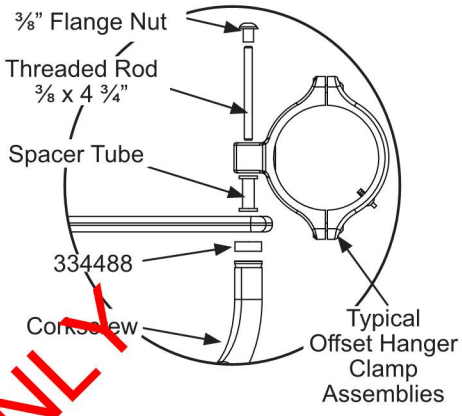

DETAIL HANDHOLD CONN.

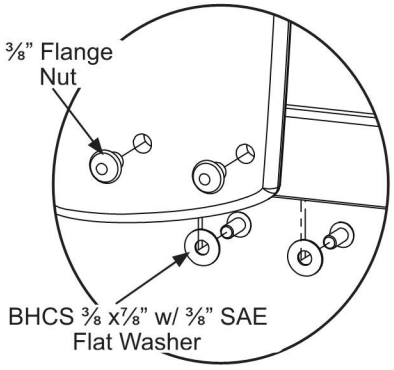

TOP DOWN VIEW

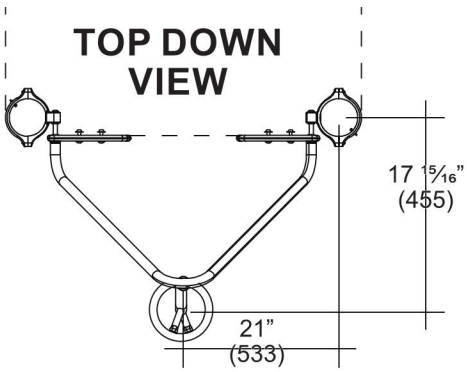

FOR REFERENCE ONLY

© 2024 By Landscape Structures. All rights reserved.

INCLINED POD BRIDGE

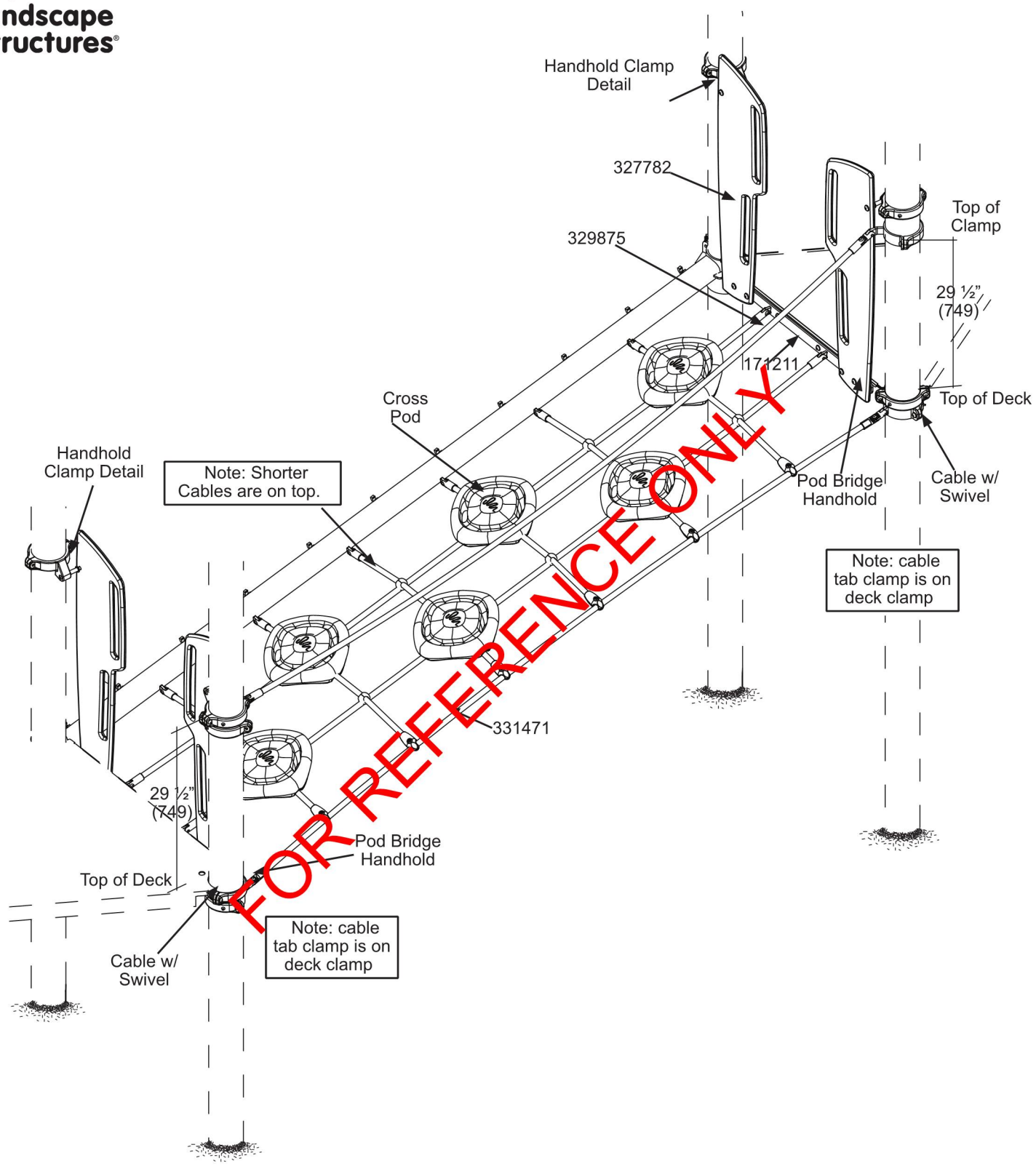

FOR REFERENCE ONLY

Approx. End to End Cable length	
329875	117-7/16"

© 2024 By Landscape Structures. All rights reserved.

INCLINED POD BRIDGE

DETAIL HANDHOLD CLAMP

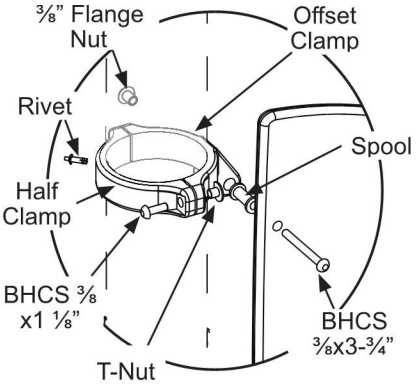

DETAIL BENT TAB CLAMP

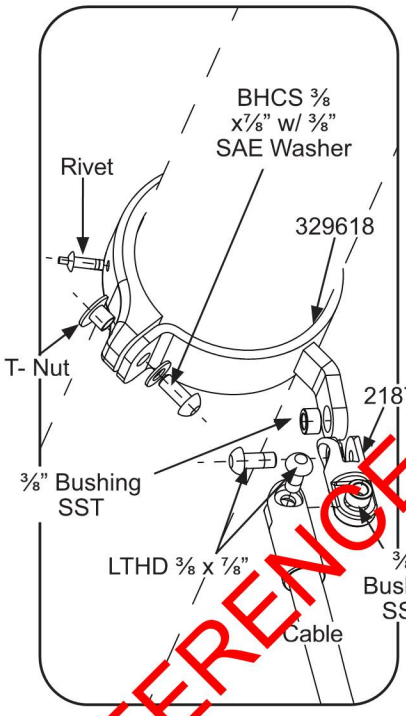

DETAIL CROSS POD

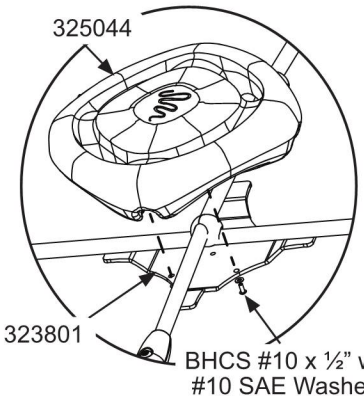

DETAIL CLAMP W/ SWIVEL

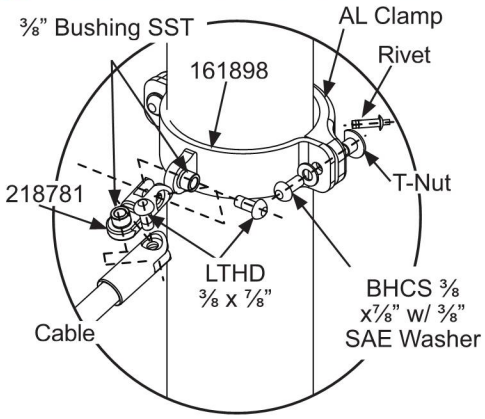

DETAIL POD BRIDGE HANDHOLD

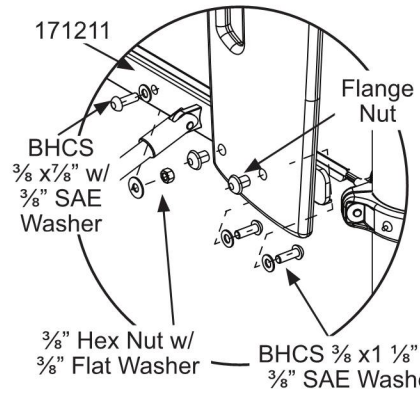

DETAIL CABLE TAB CONN.

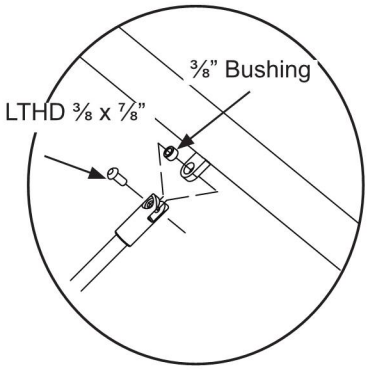

FOR REFERENCE ONLY

© 2024 By Landscape Structures. All rights reserved.

SADDLE CLIMBER

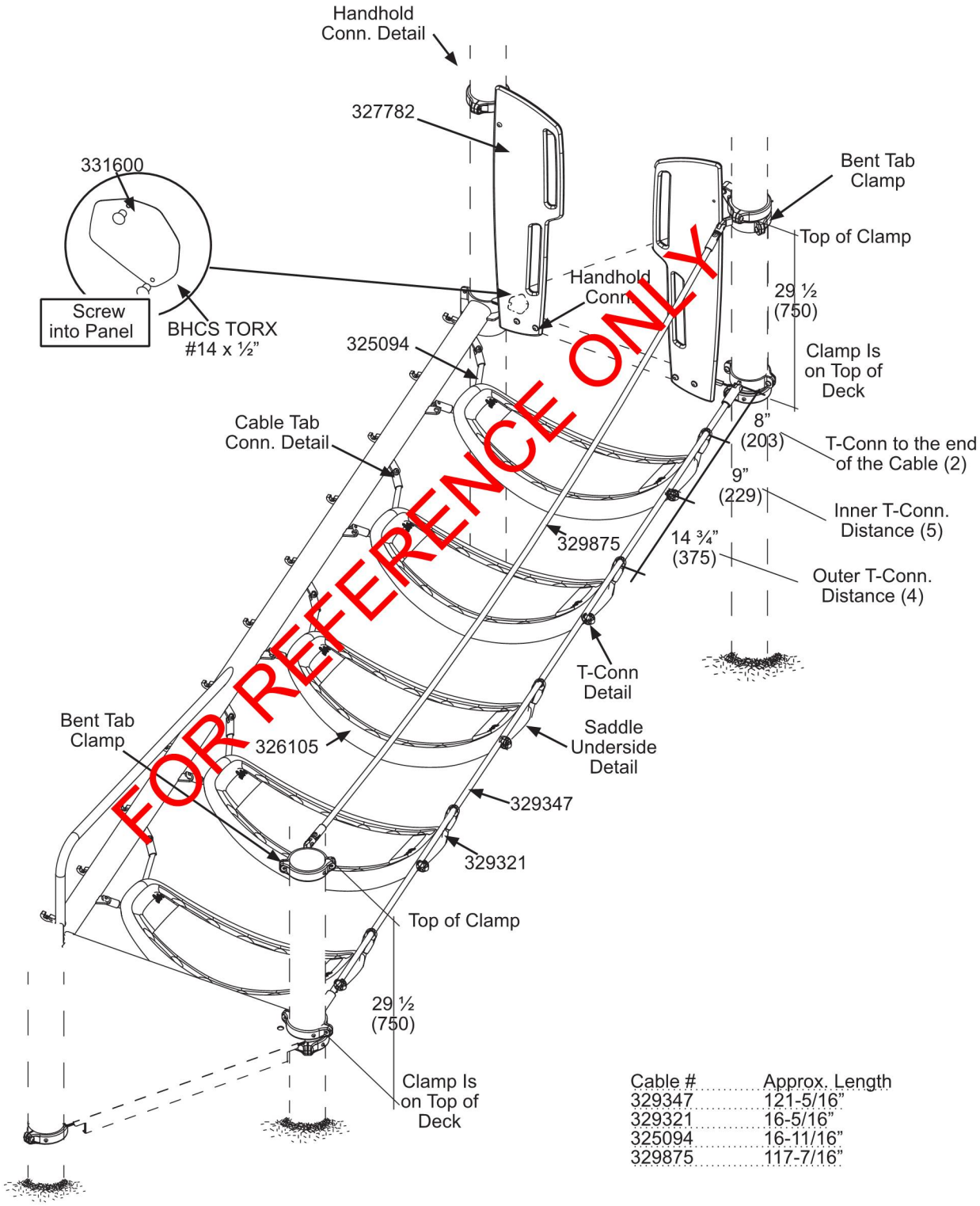

Cable #	Approx. Length
329347	121-5/16”
329321	16-5/16”
325094	16-11/16”
329875	117-7/16”

601 7TH STREET SOUTH, DELANO, MINNESOTA 55328-8605 888-574-4678 LSI Install Help 888-438-6574 LSI Direct 763-972-5200 Int. FAX (763) 972-3185

© 2024 By Landscape Structures. All rights reserved.

DETAIL T-CONN.

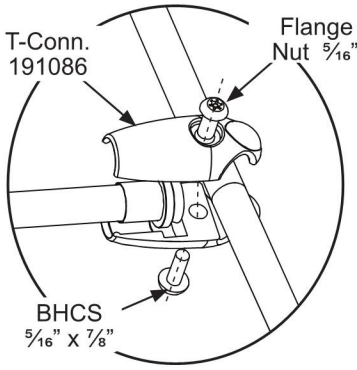

DETAIL SADDLE UNDERSIDE

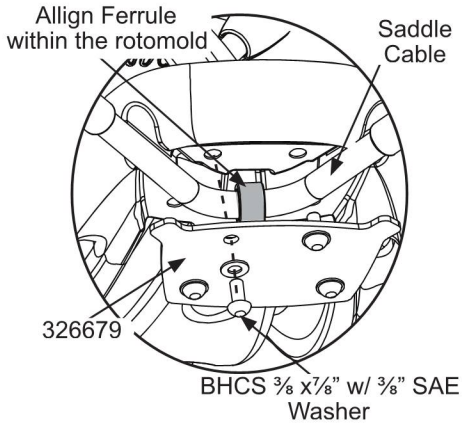

DETAIL HANDHOLD CONN.

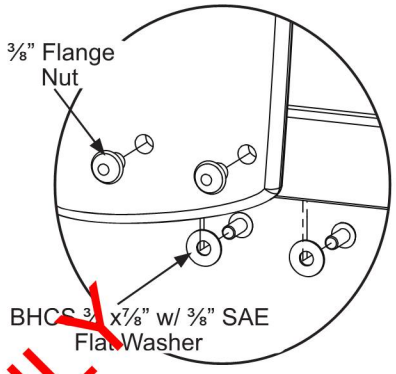

DETAIL HANDHOLD CLAMP

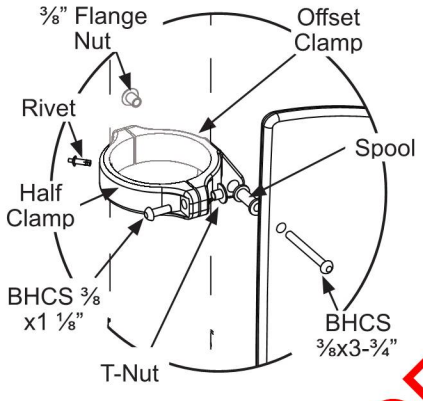

DETAIL CABLE TAB CONN.

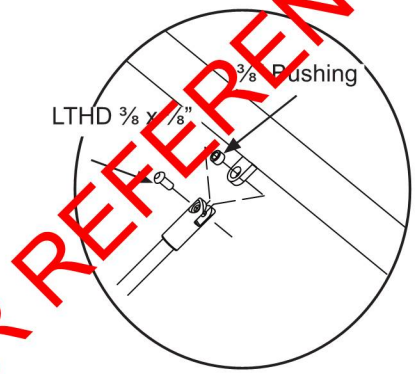

DETAIL BENT TAB CLAMP

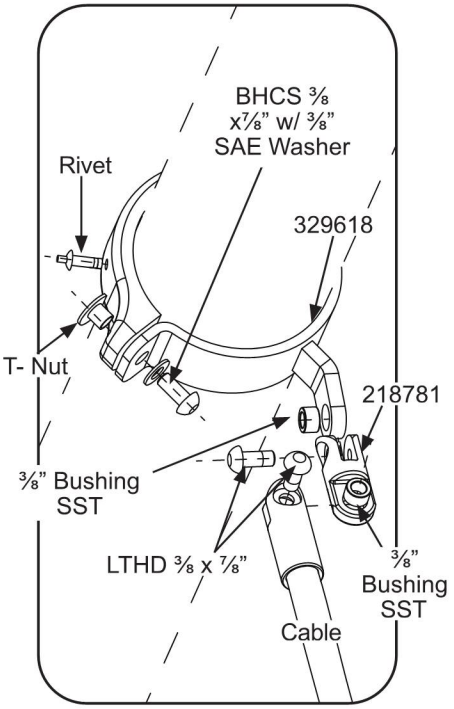

FOR REFERENCE ONLY

© 2024 By Landscape Structures. All rights reserved.

DOUBLE WAVE SLIDE

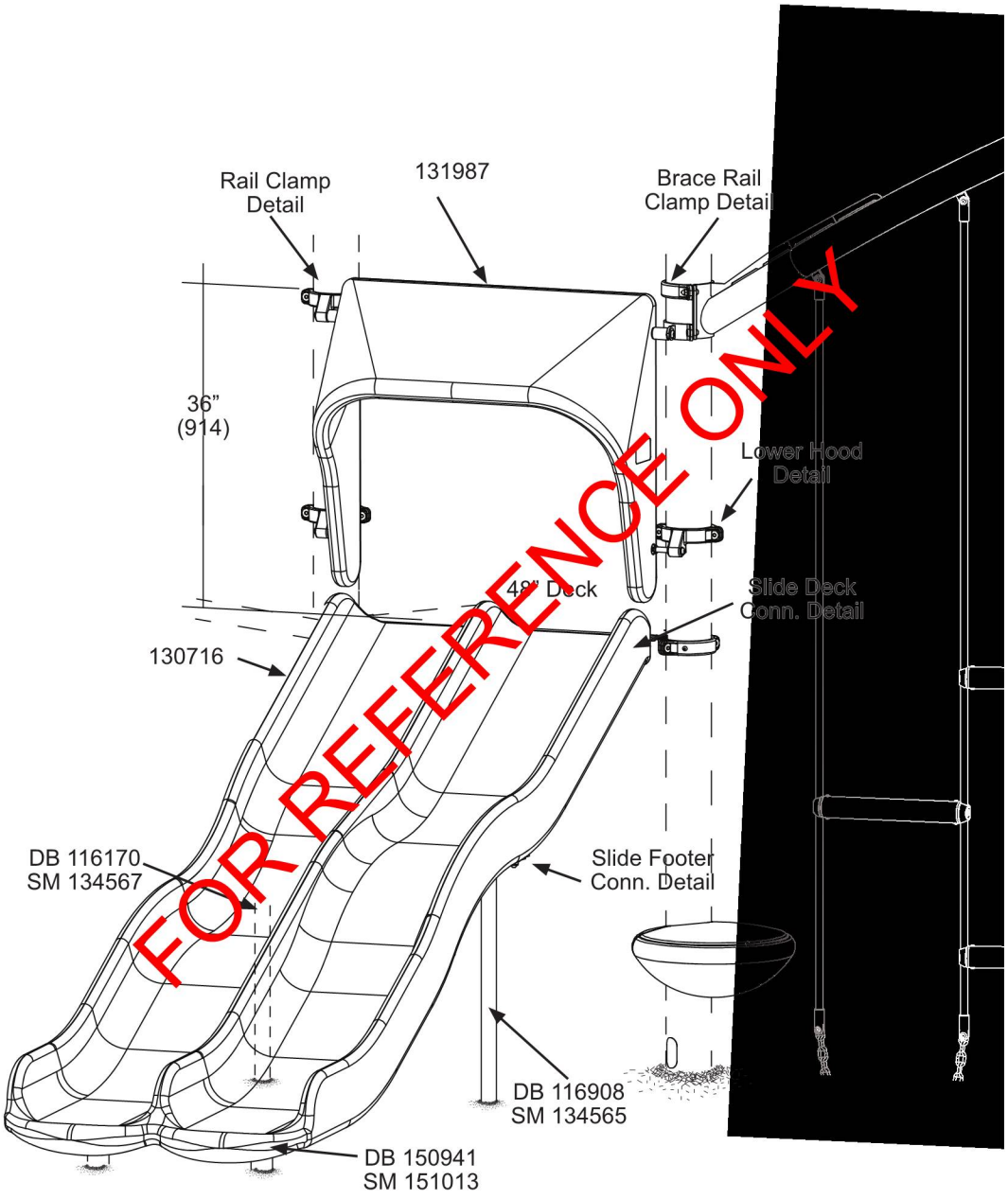

© 2024 By Landscape Structures. All rights reserved.

DETAIL BRACE RAIL CLAMP

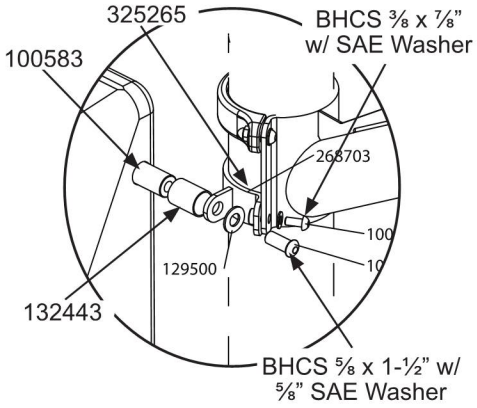

DETAIL RAIL CLAMP

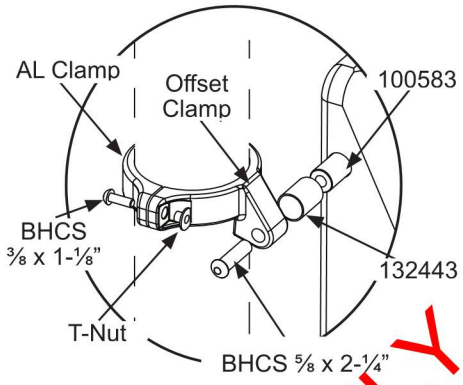

DETAIL SLIDE FOOTER CONN.

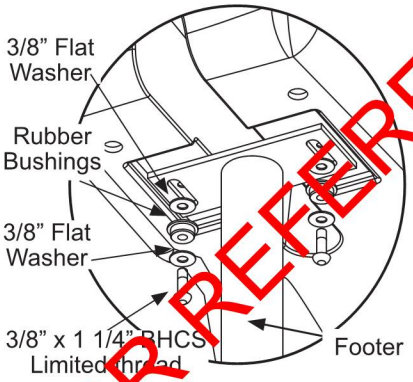

DETAIL SLIDE DECK CONN.

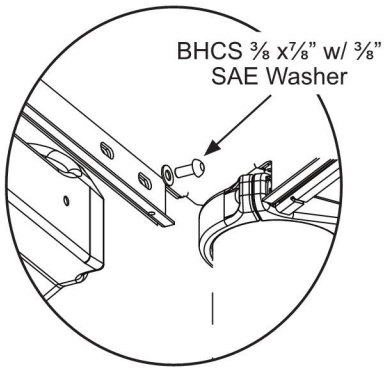

DETAIL LOWER HOOD

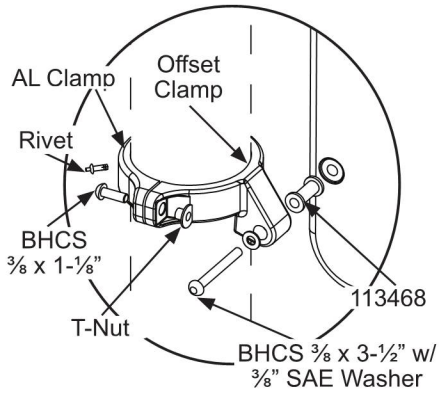

FOR REFERENCE ONLY

© 2024 By Landscape Structures. All rights reserved.

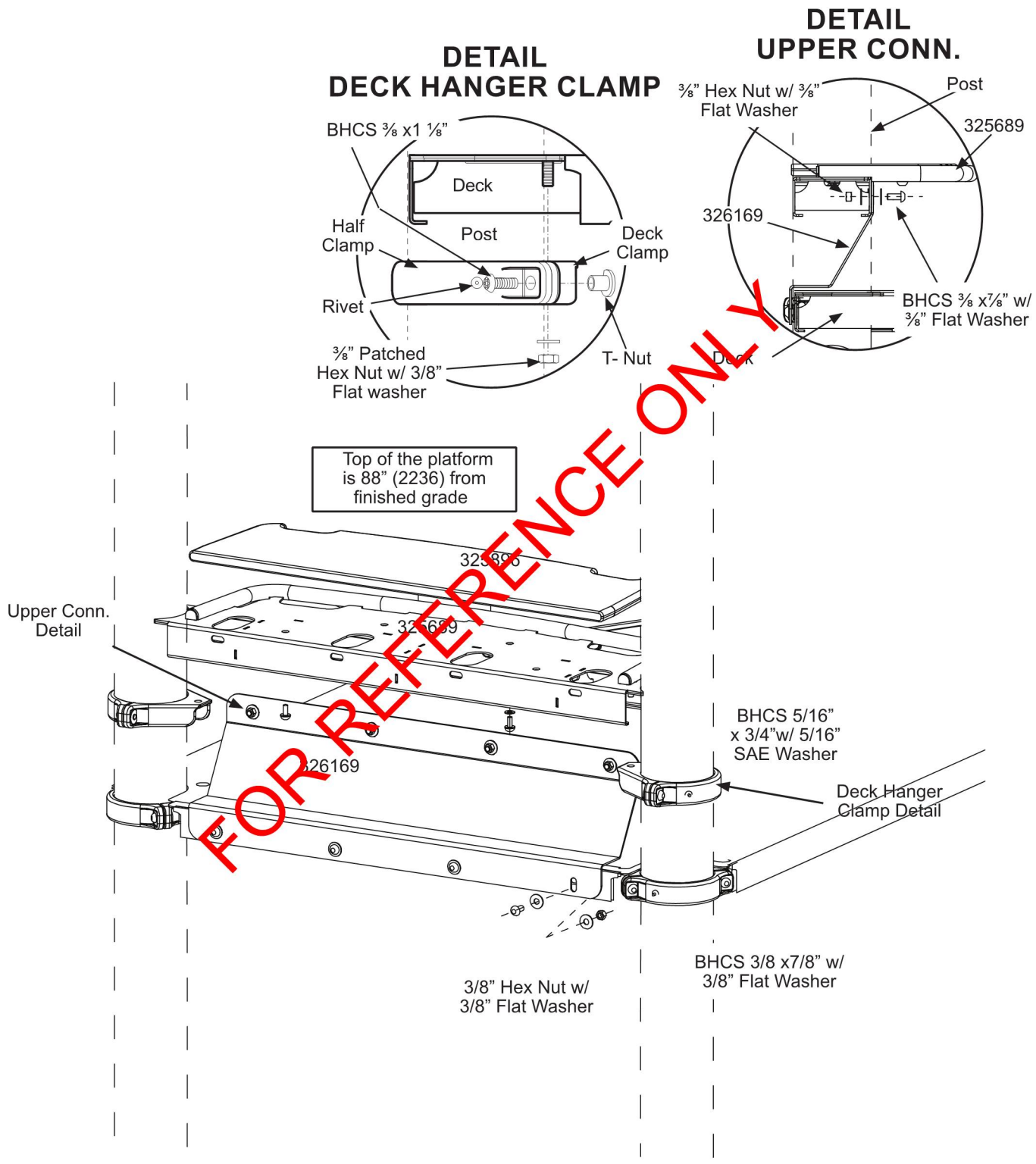

FOR REFERENCE ONLY

© 2024 By Landscape Structures. All rights reserved.

ALPINE SLIDE

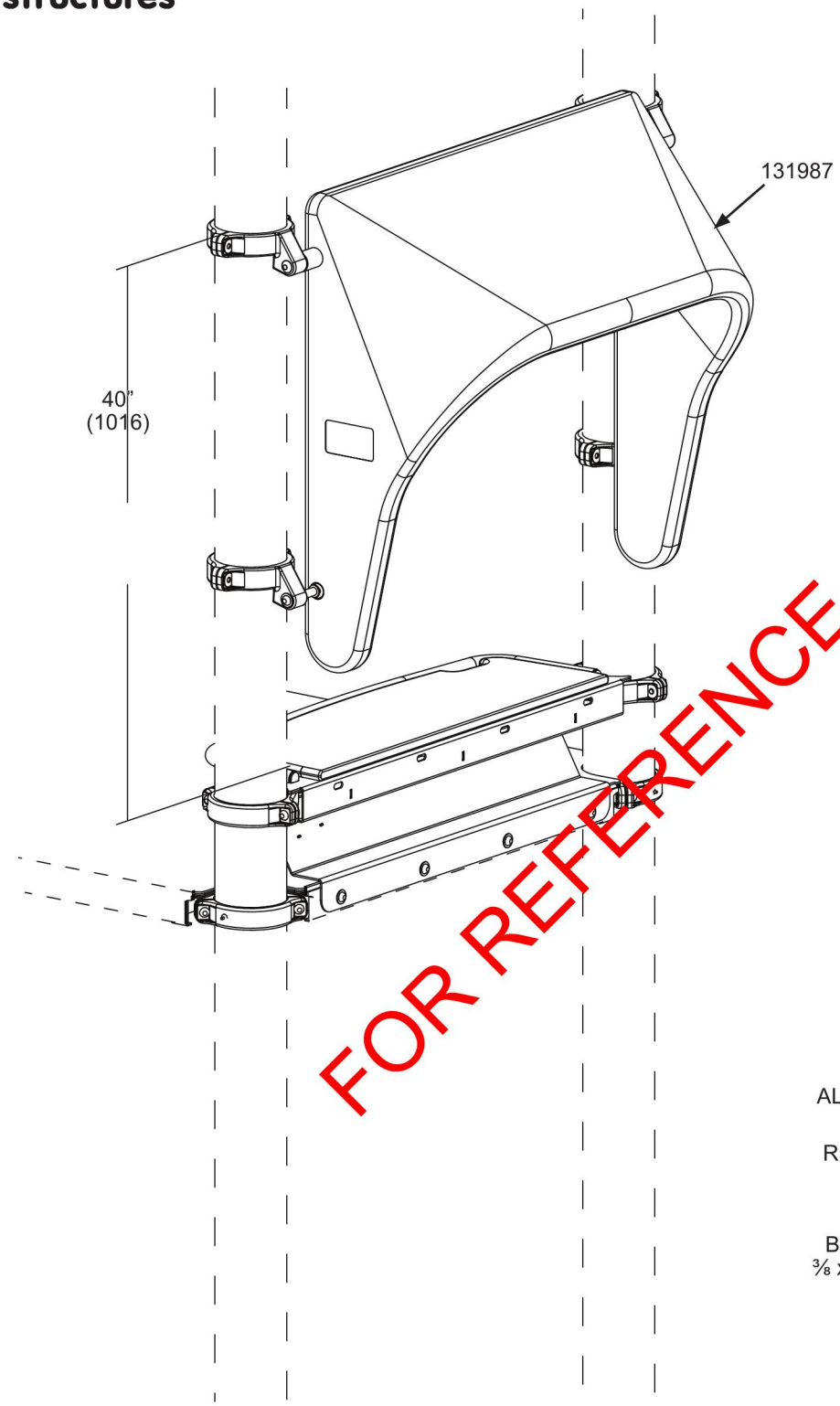

FOR REFERENCE ONLY

DETAIL RAIL CLAMP

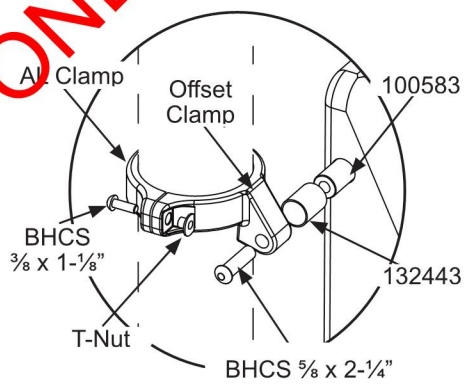

DETAIL LOWER HOOD

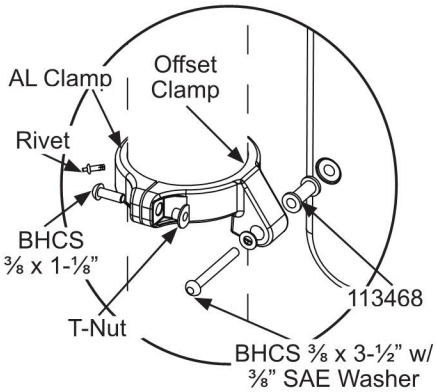

© 2024 By Landscape Structures. All rights reserved.

landscape structures®

ALPINE SLIDE

DETAIL
ALPINE EXIT FOOTER

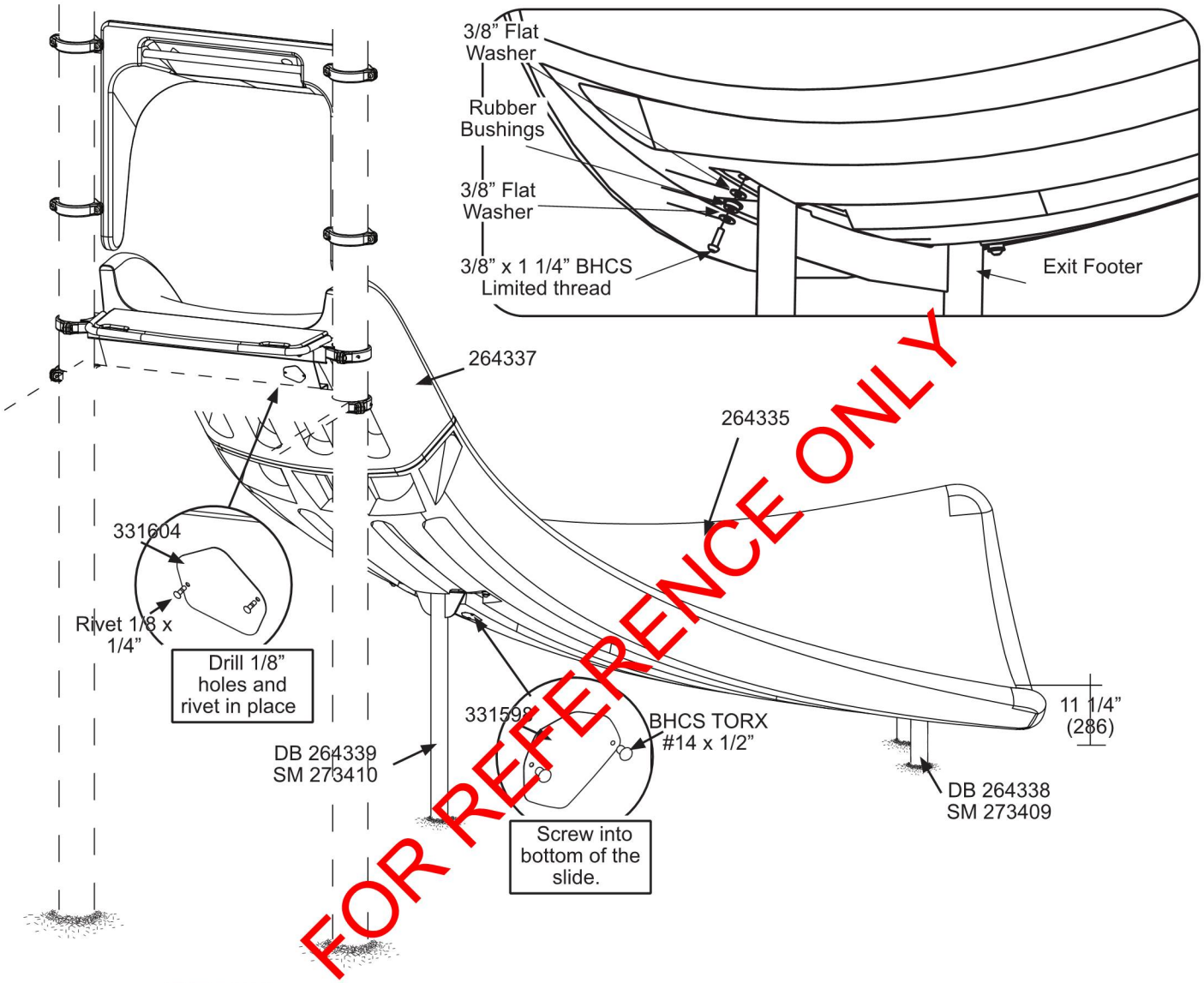

FOR REFERENCE ONLY

DETAIL
SLIDE CONN.

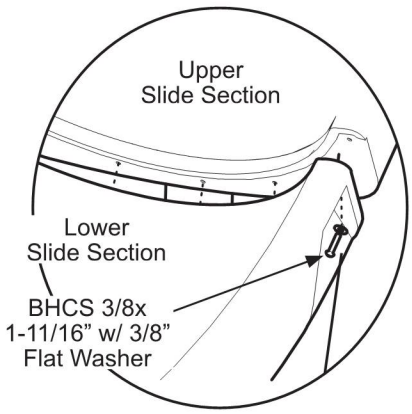

DETAIL
MID SUPPORT

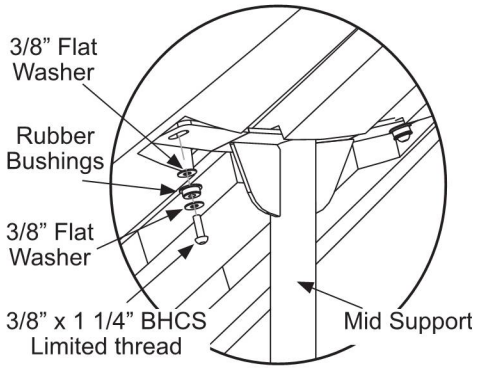

DETAIL
SLIDE DECK CONN.

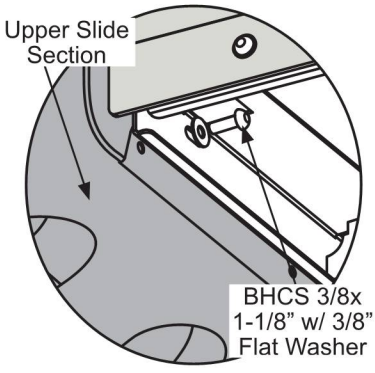

Smart Play®

323659 Volo™

601 7TH STREET SOUTH, DELANO, MINNESOTA 55328-8605 888-574-4678 LSI Install Help 888-438-6574 LSI Direct 763-972-5200 Int. FAX (763) 972-3185

© 2024 By Landscape Structures. All rights reserved.

landscape structures®

RUNG CLIMBER

DETAIL RUNG STEP 1

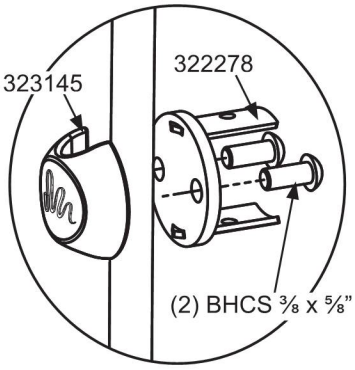

DETAIL RUNG STEP 2

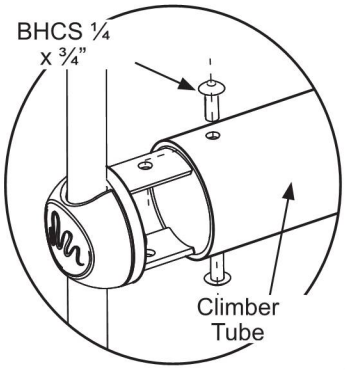

DETAIL CABLE TAB CONN.

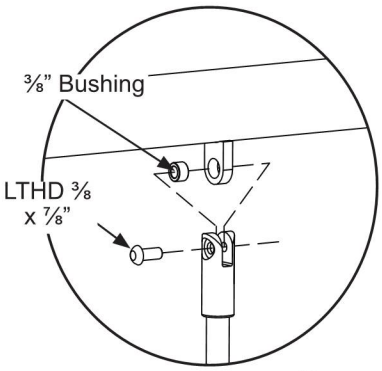

FOR REFERENCE ONLY

DETAIL EVOS POD STEPPER

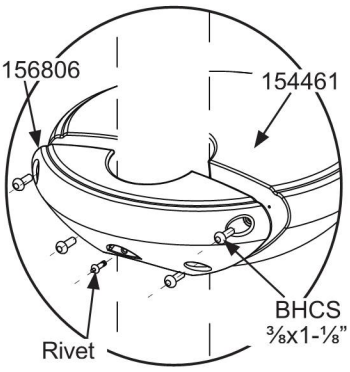

DETAIL CABLE / CHAIN CONN.

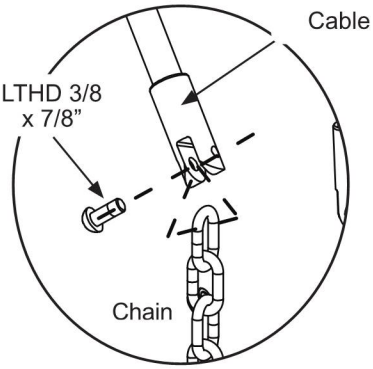

Cable #	Approx. Length
324190	84 1/8”
324191	93 5/8”
324192	101 3/8”
324193	51 5/8”
324195	111 5/8”
324196	114 1/4”
324197	115”

© 2024 By Landscape Structures. All rights reserved.

landscape structures®

PENTAGON CLIMBER

DETAIL PVC CHAIN CONN.

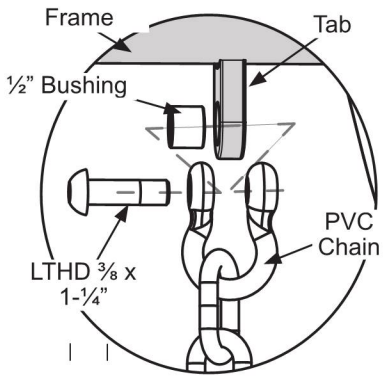

DETAIL CABLE TAB CONN.

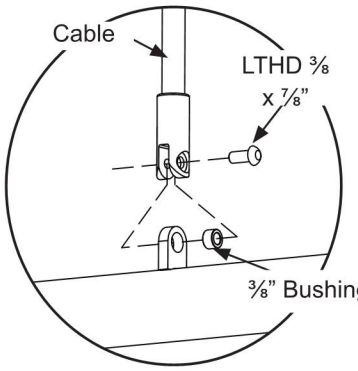

DETAIL EVOS CASTING

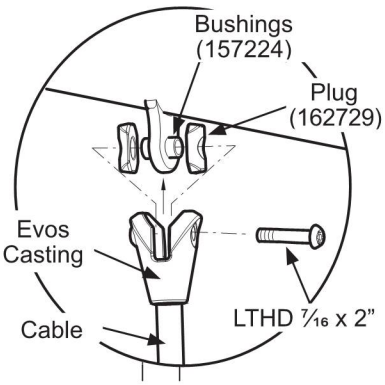

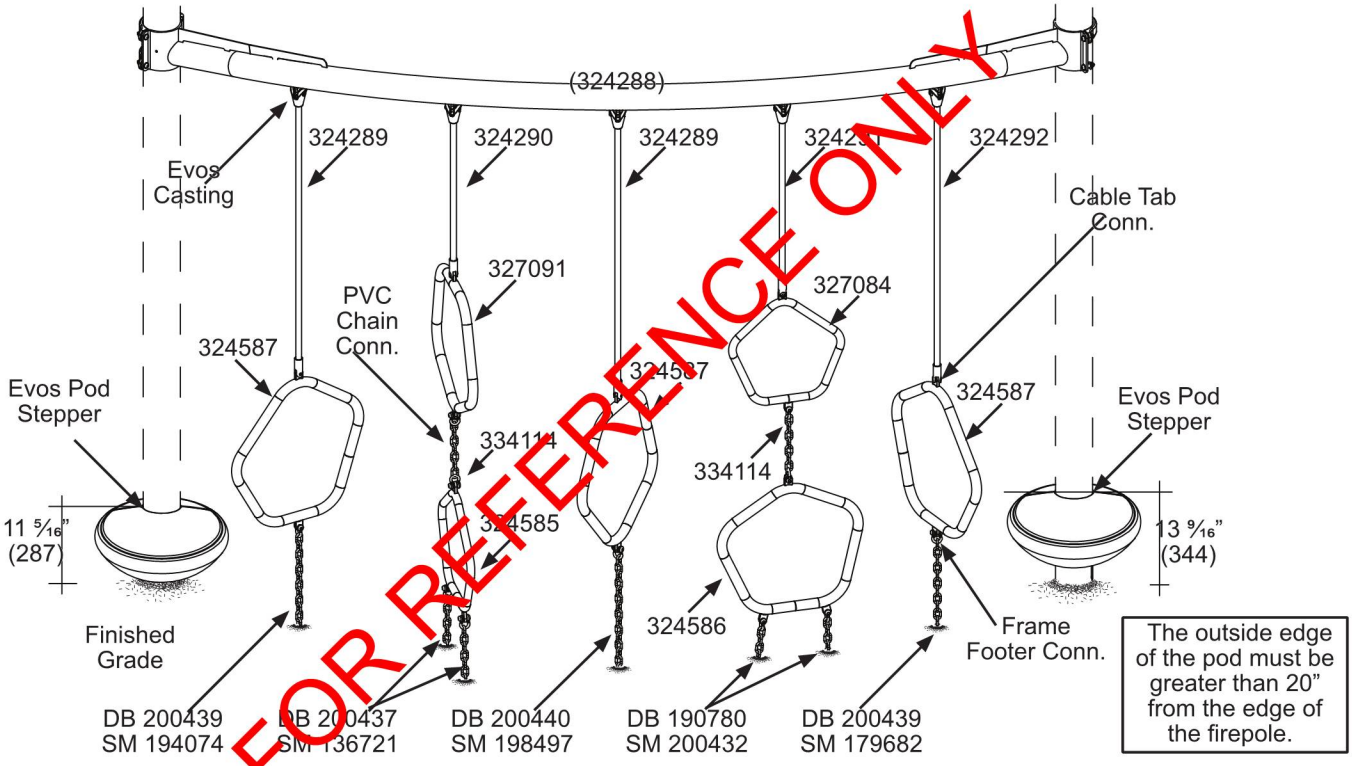

FOR REFERENCE ONLY

The outside edge of the pod must be greater than 20" from the edge of the firepole.

DETAIL EVOS POD STEPPER

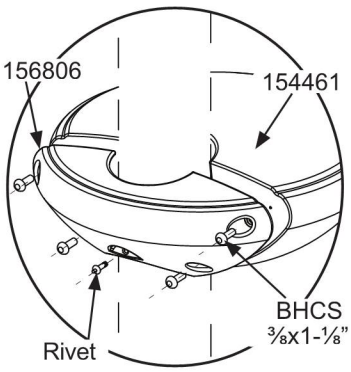

DETAIL FRAME FOOTER CONN.

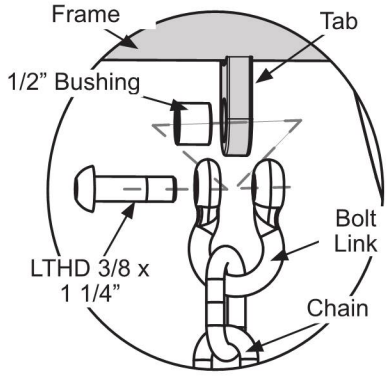

Cable #	Approx. Length
324289	45"
324292	46"
324291	30"
324290	27"

© 2024 By Landscape Structures. All rights reserved.

SWIGGLE KNOTS BRIDGE

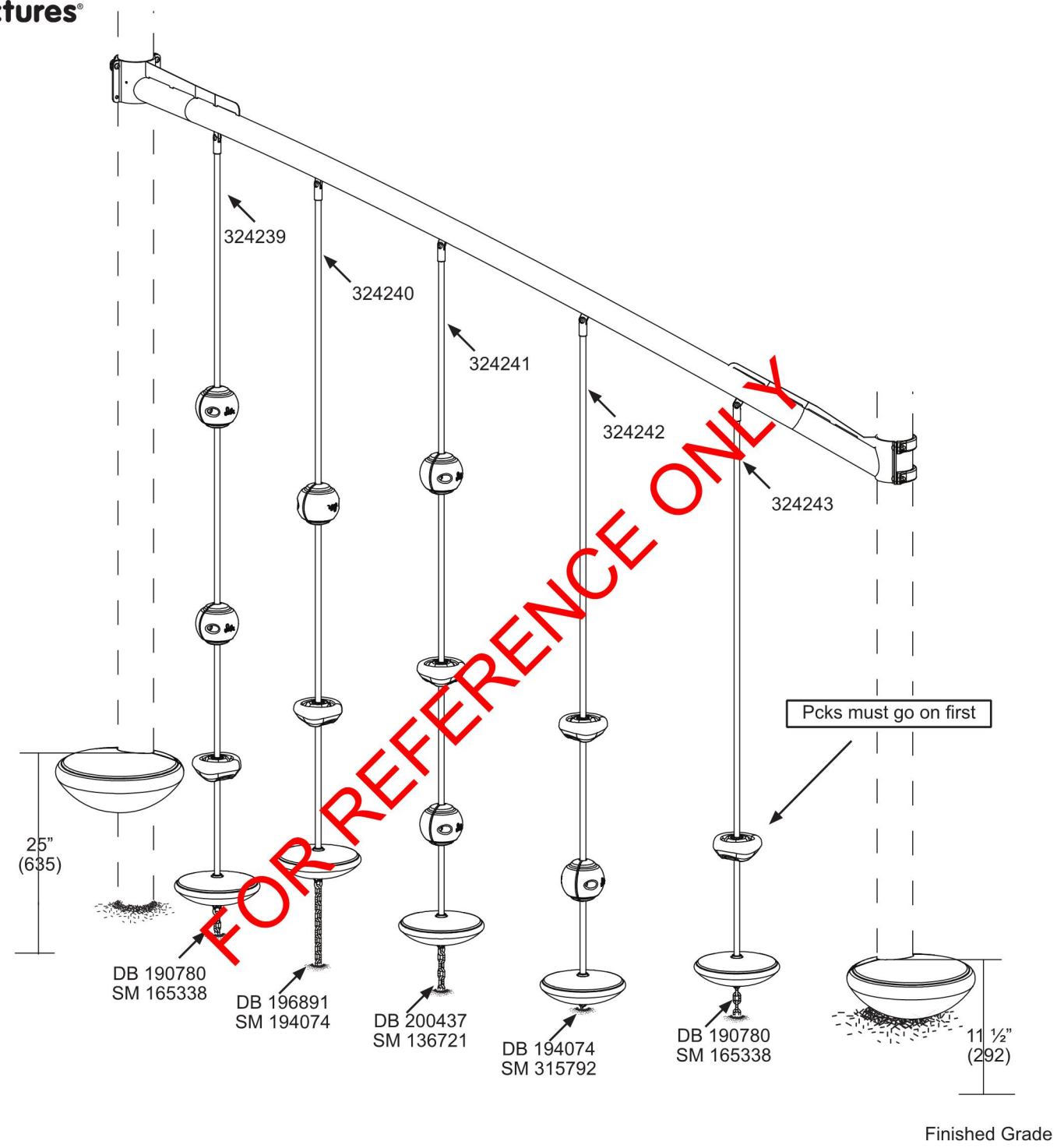

FOR REFERENCE ONLY

Cable #	Approx. Length
324239	110 1/4”
324240	99 5/8”
324241	100 3/8”
324242	98 1/8”
324243	83 1/8”

© 2024 By Landscape Structures. All rights reserved.

SWIGGLE KNOTS BRIDGE

DETAIL SWIGGLE POD ASM.

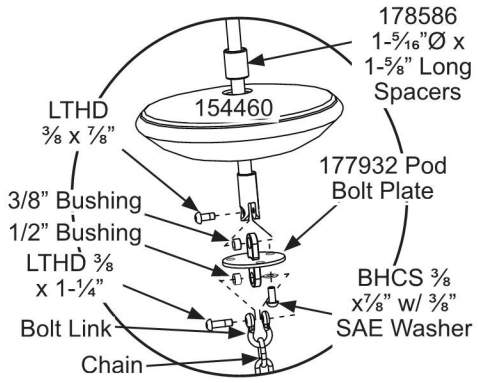

DETAIL BALL KNOT CONN.

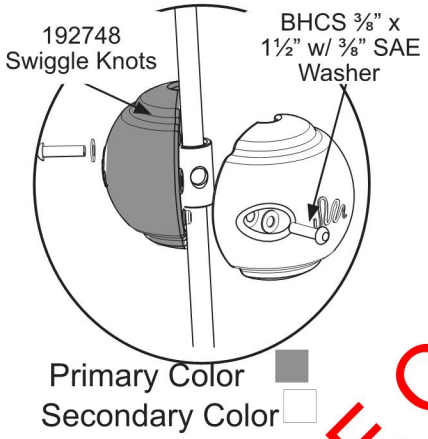

DETAIL CABLE TAB CONN.

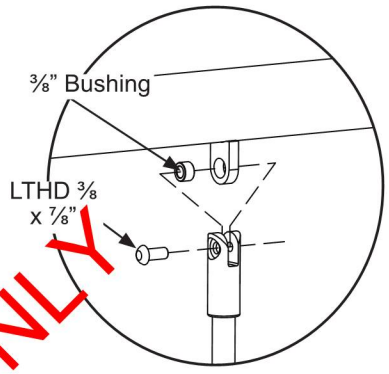

DETAIL EVOS POD STEPPER

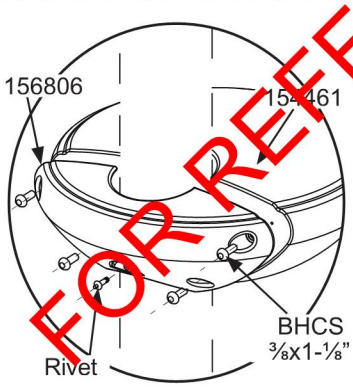

DETAIL PUCK ASM.

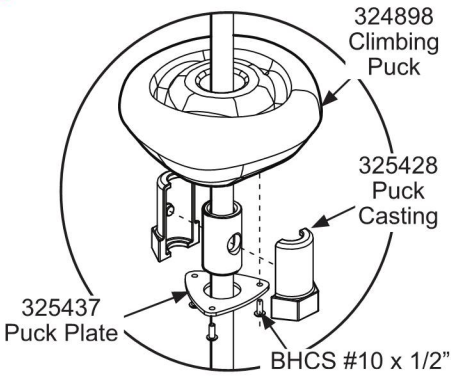

FOR REFERENCE ONLY

© 2024 By Landscape Structures. All rights reserved.

landscape structures®

OODLE SEAT CLIMBER

DETAIL CABLE TAB CLAMP

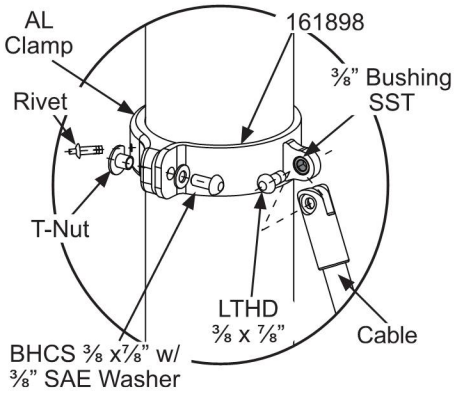

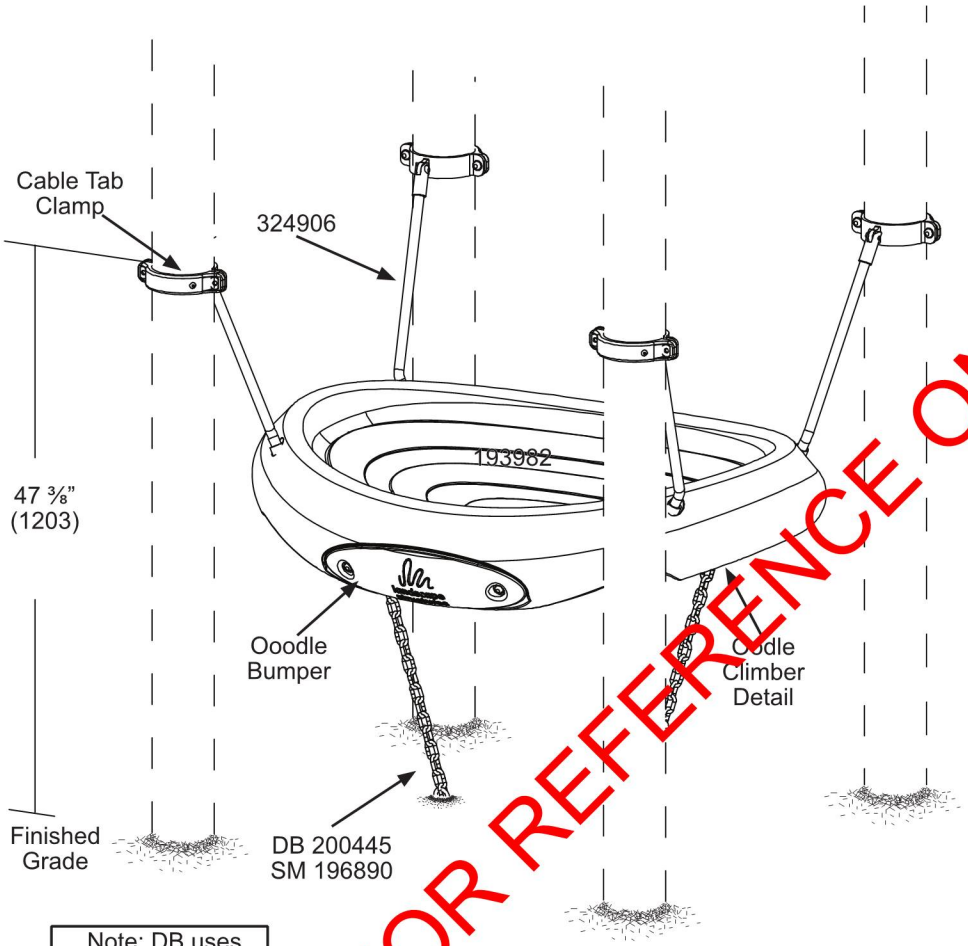

Note: DB uses 282264 footer.

FOR REFERENCE ONLY

DETAIL OODLE BUMPER

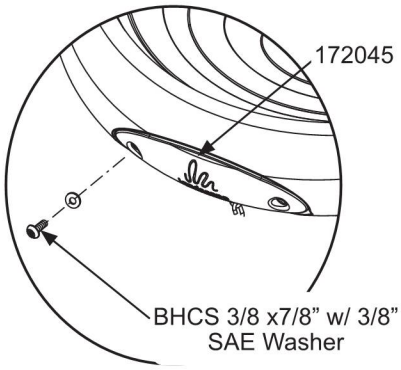

DETAIL OODLE CLIMBER

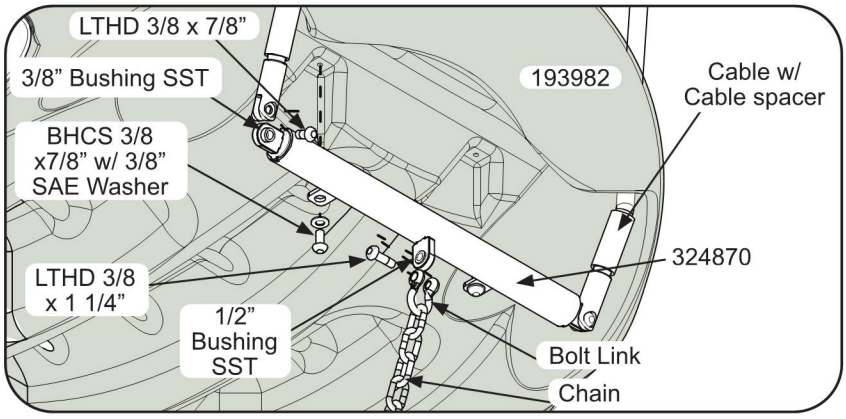

Cable #	Approx.Total Length
324906	24 3/8

© 2024 By Landscape Structures. All rights reserved.

landscape structures®

80” CRUX CLIMBER

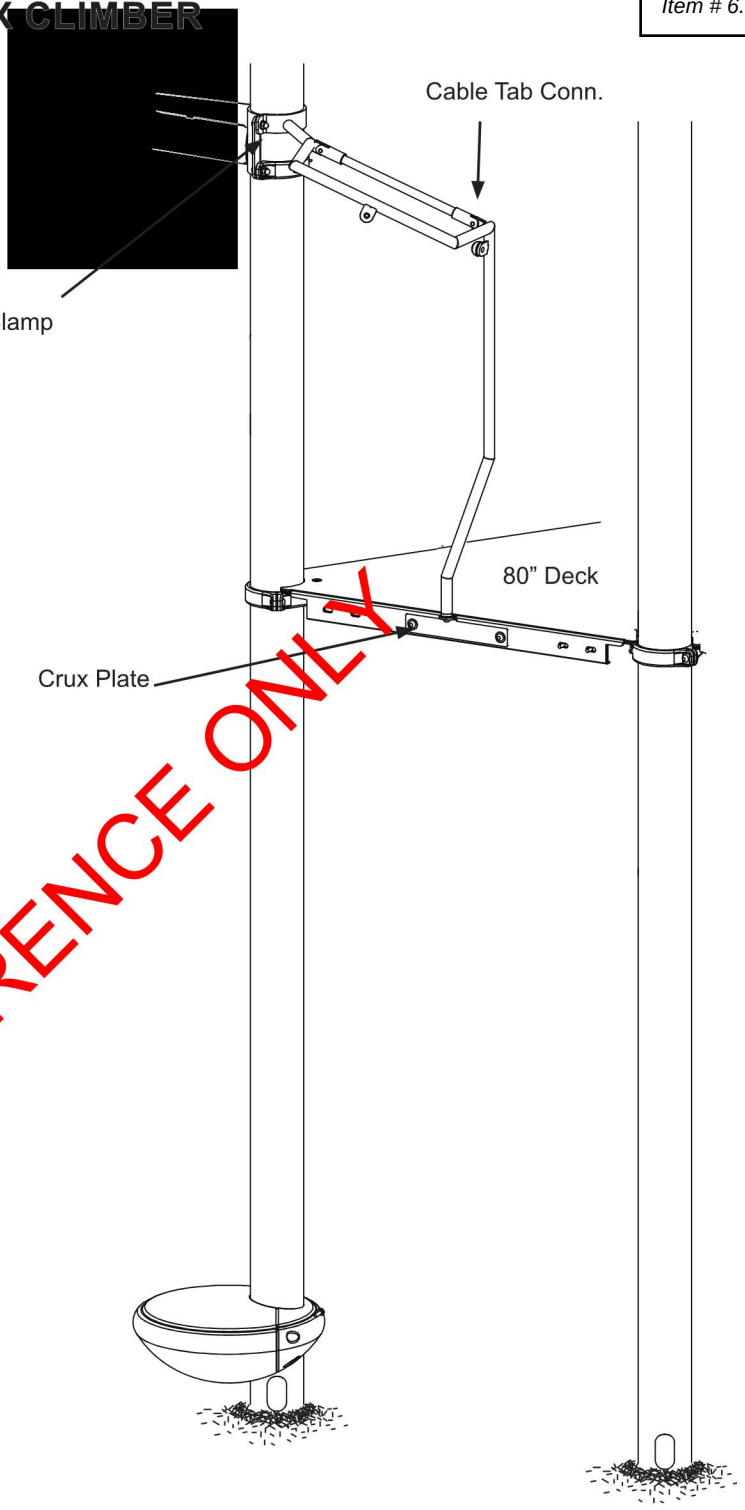

DETAIL CABLE TAB CONN.

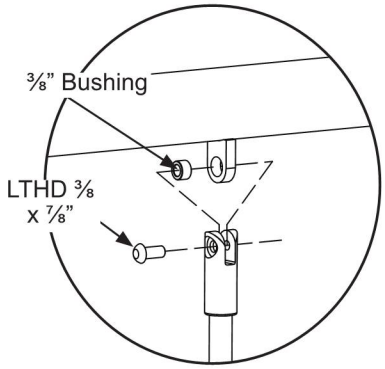

DETAIL CRUX UPPER CLAMP

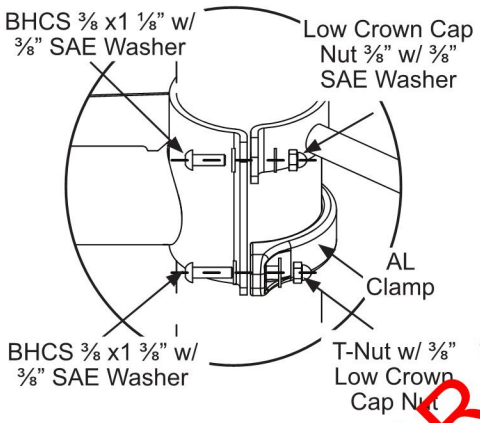

DETAIL CRUX PLATE

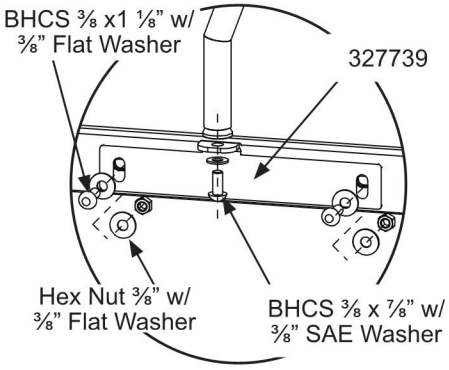

FOR REFERENCE ONLY

© 2024 By Landscape Structures. All rights reserved.

landscape structures®

80” CRUX CLIMBER

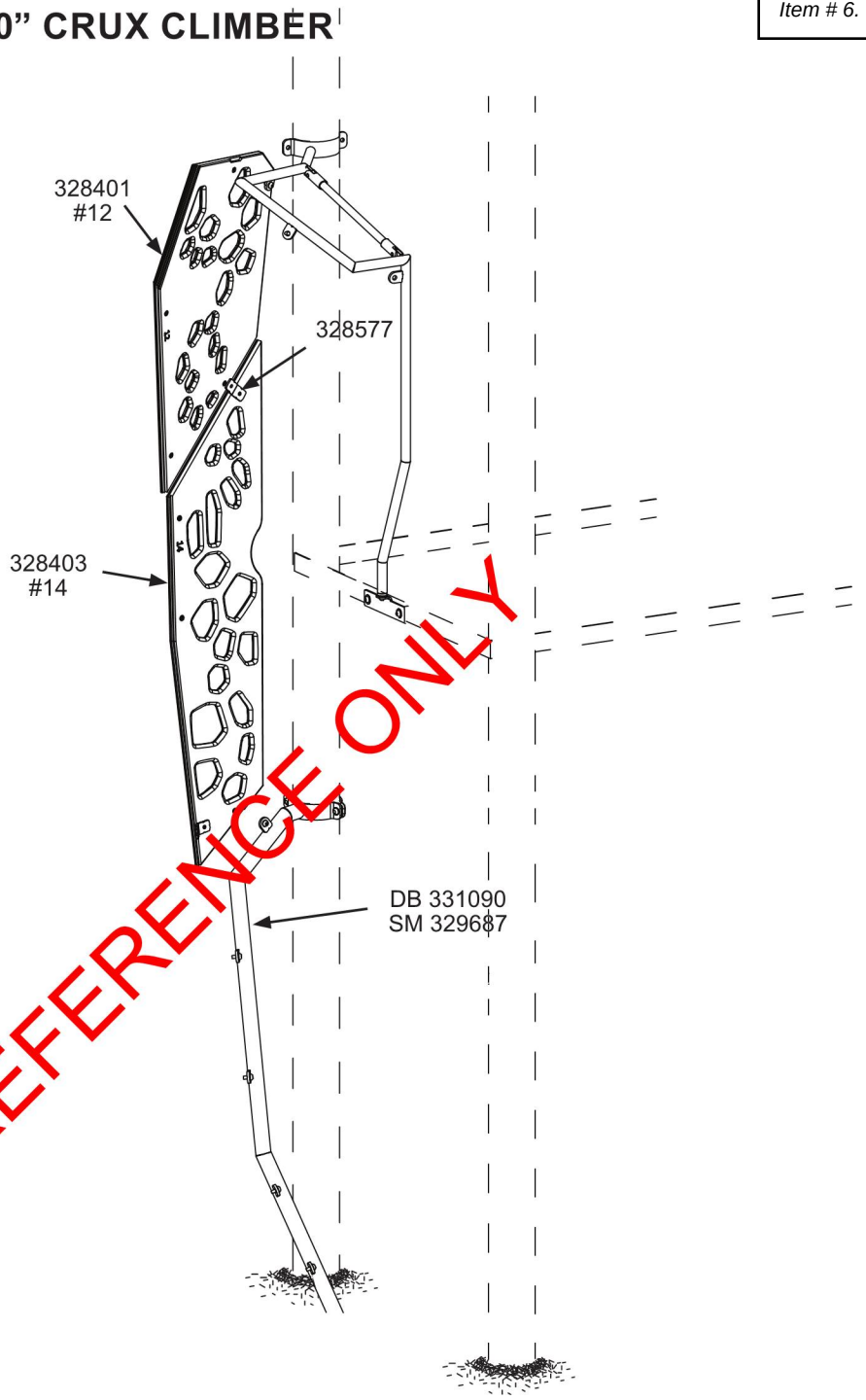

DETAIL 328577

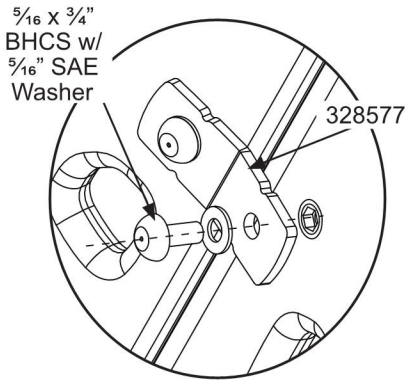

DETAIL CRUX FRAME

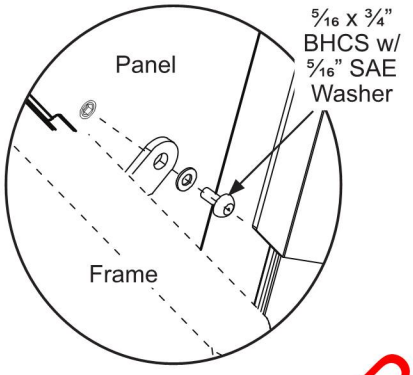

DETAIL CRUX CLAMP CONN.

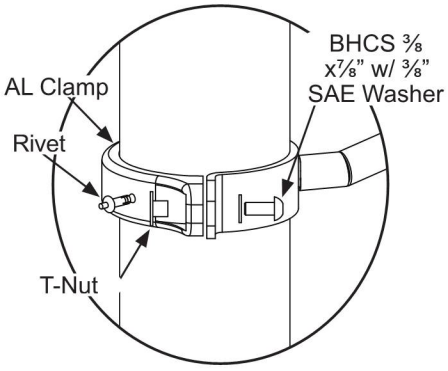

FOR REFERENCE ONLY

© 2024 By Landscape Structures. All rights reserved.

80” CRUX CLIMBER

DETAIL CRUX FRAME

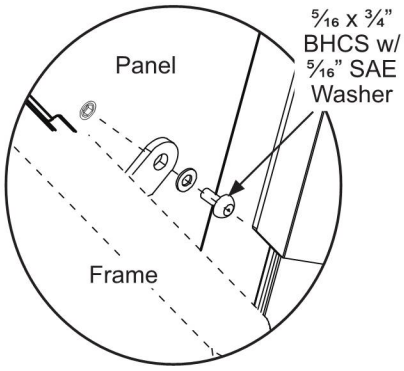

DETAIL ANGLE CONN.

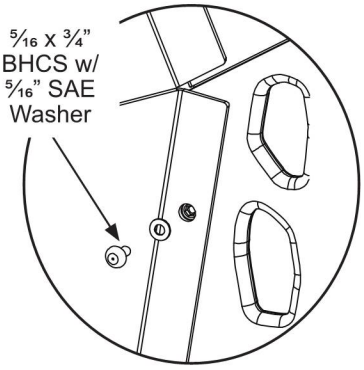

DETAIL 328578

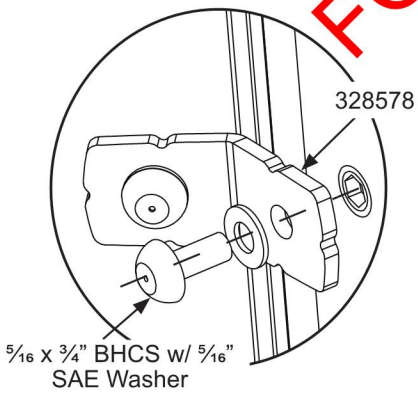

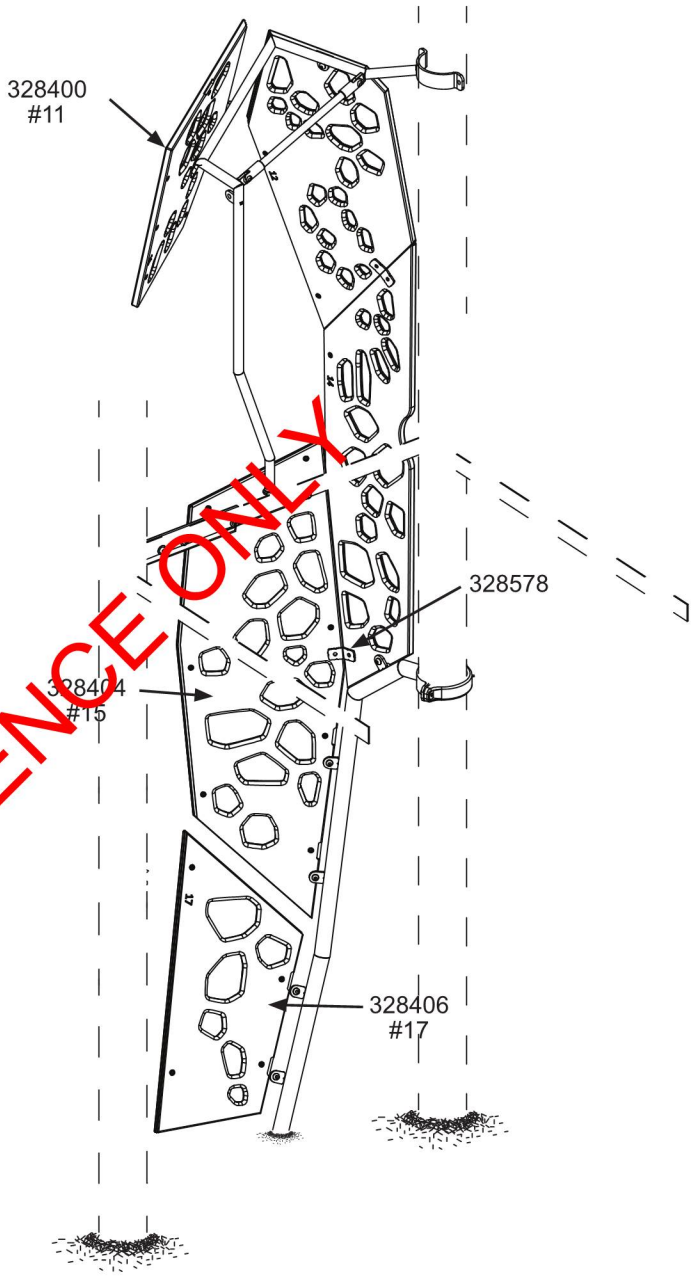

FOR REFERENCE ONLY

© 2024 By Landscape Structures. All rights reserved.

landscape structures®

80” CRUX CLIMBER

DETAIL ANGLE CONN.

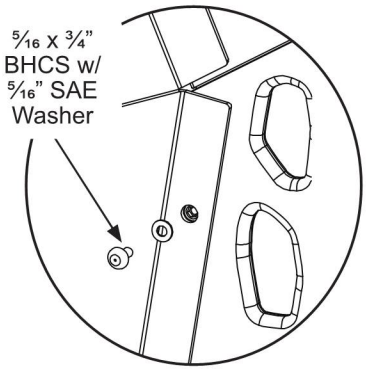

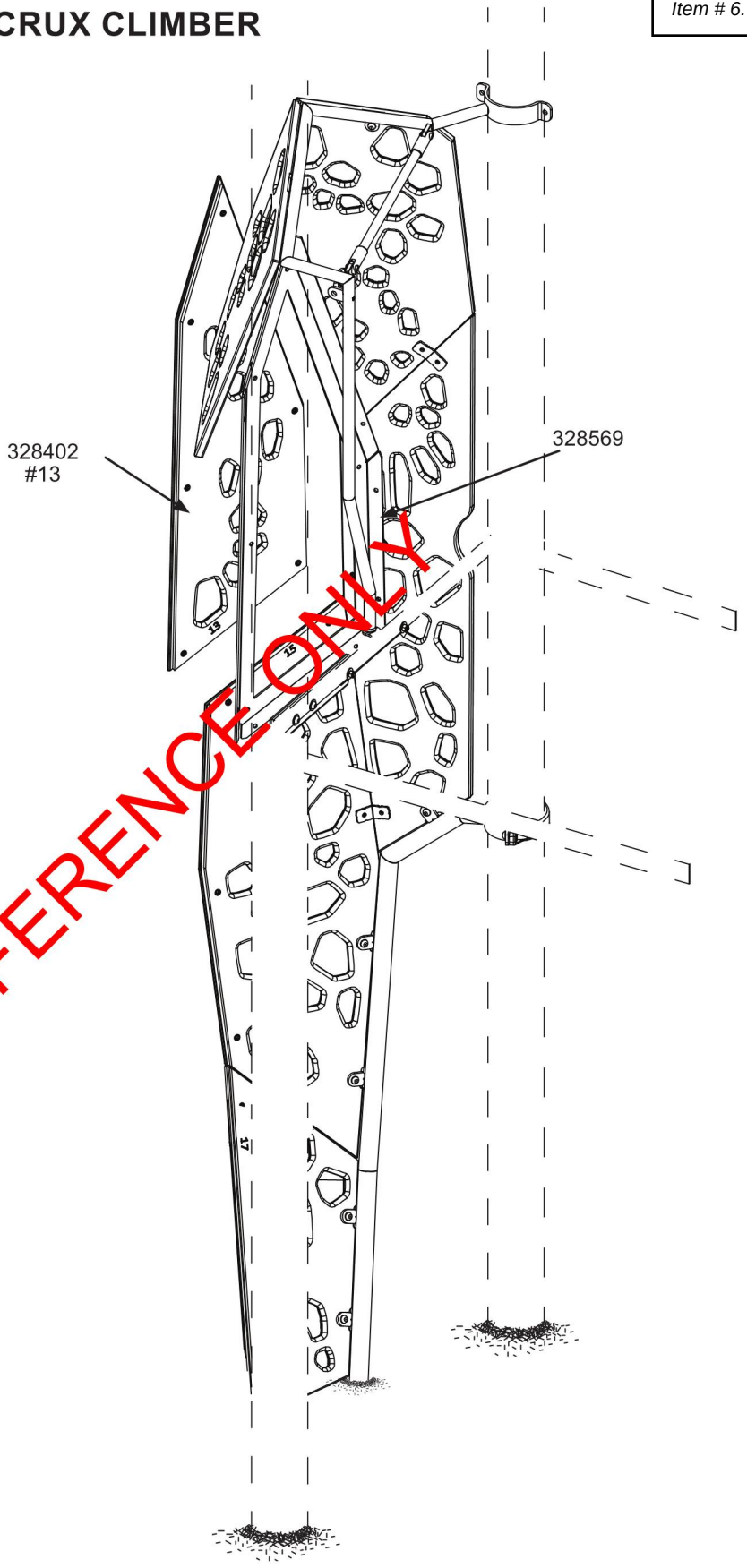

FOR REFERENCE ONLY

© 2024 By Landscape Structures. All rights reserved.

80” CRUX CLIMBER

DETAIL CRUX CLAMP CONN.

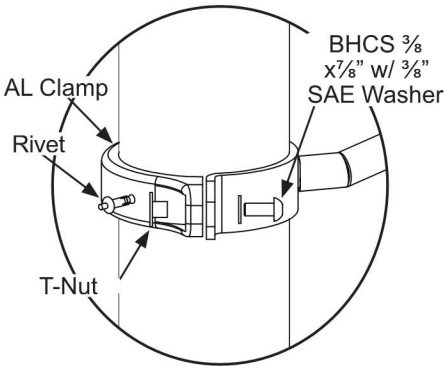

DETAIL ANGLE CONN.

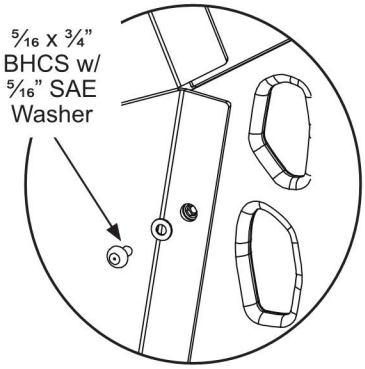

DETAIL CRUX FRAME

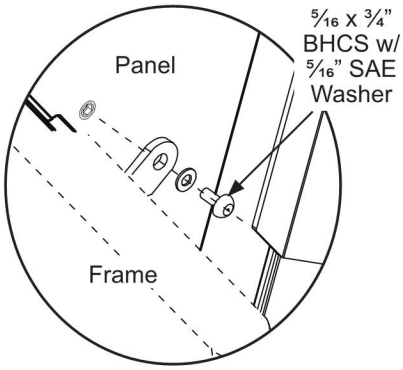

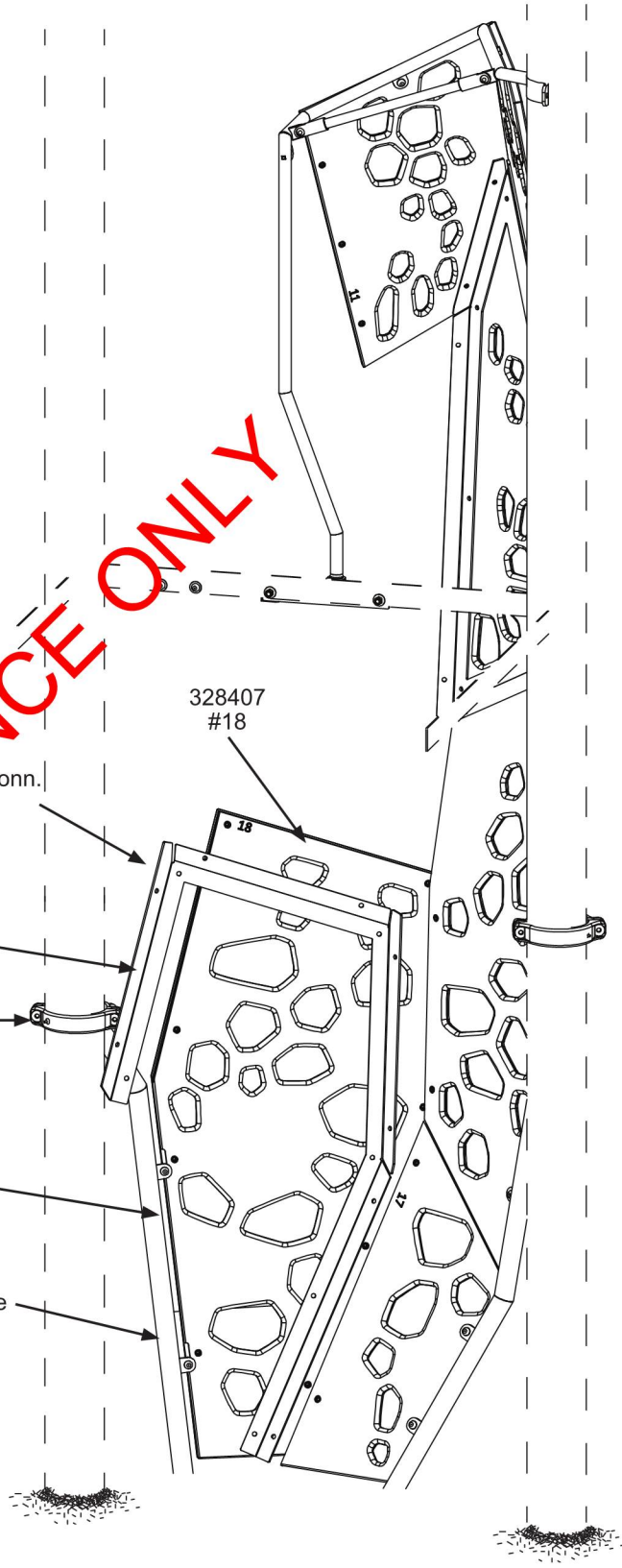

FOR REFERENCE ONLY

© 2024 By Landscape Structures. All rights reserved.

landscape structures®

80” CRUX CLIMBER

DETAIL ANGLE CONN.

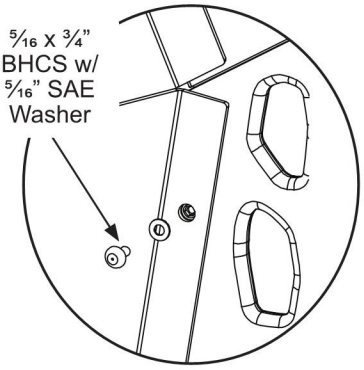

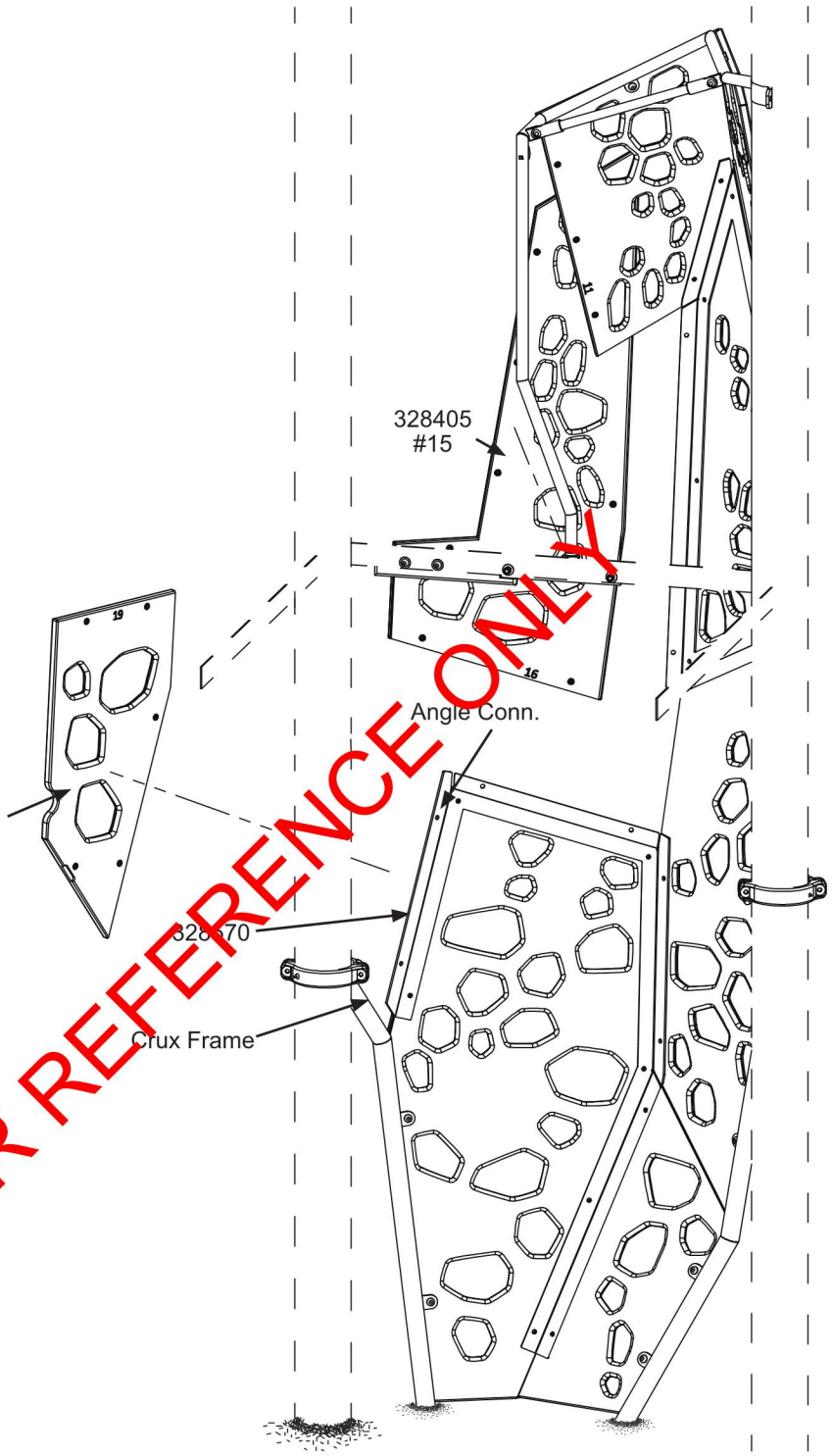

DETAIL CRUX FRAME

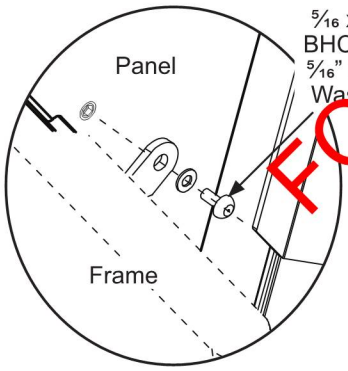

FOR REFERENCE ONLY

601 7TH STREET SOUTH, DELANO, MINNESOTA 55328-8605 888-574-4678 LSI Install Help 888-438-6574 LSI Direct 763-972-5200 Int. FAX (763) 972-3185

© 2024 By Landscape Structures. All rights reserved.

80” CRUX CLIMBER

DETAIL DECK HANGER CLAMP

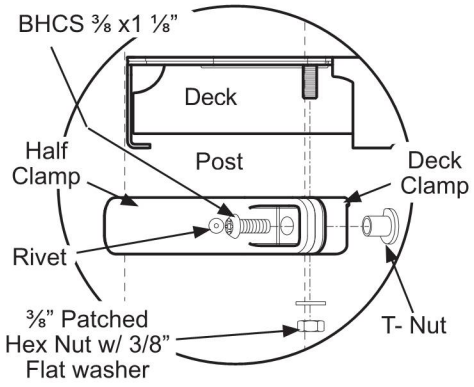

DETAIL A B CAP

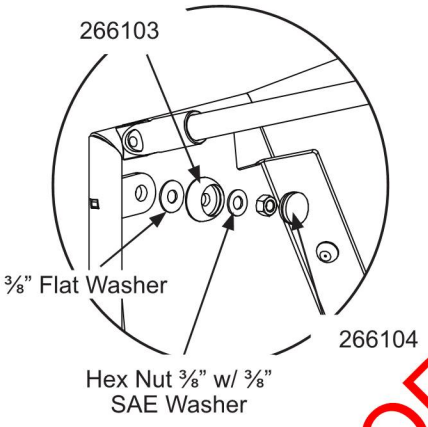

DETAIL ANGLE CONN.

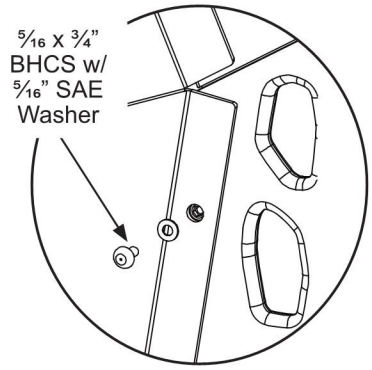

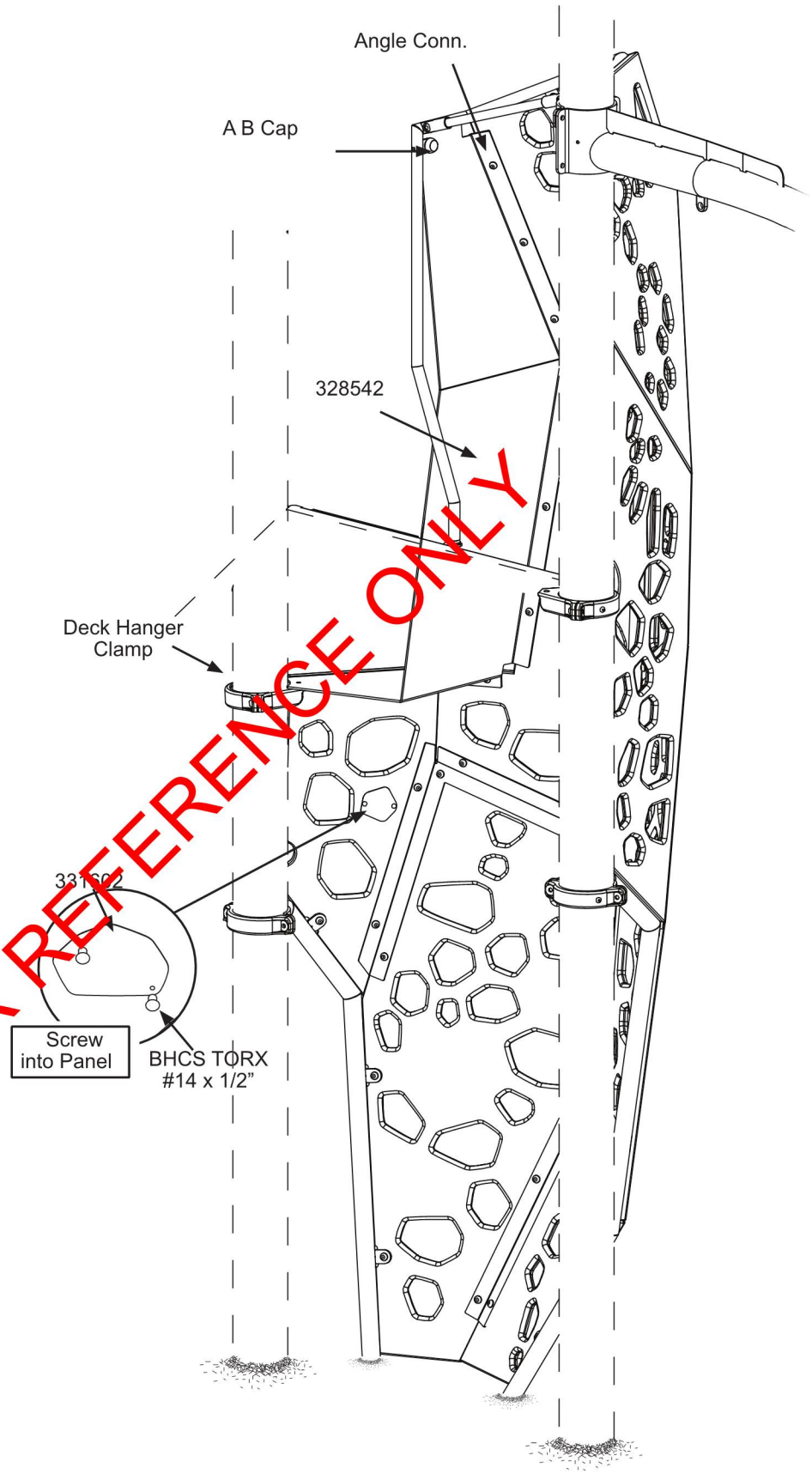

FOR REFERENCE ONLY

© 2024 By Landscape Structures. All rights reserved.

DETAIL
DECK CRUX CONNECTION

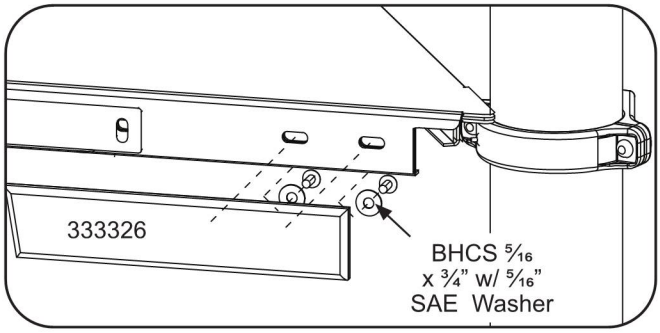

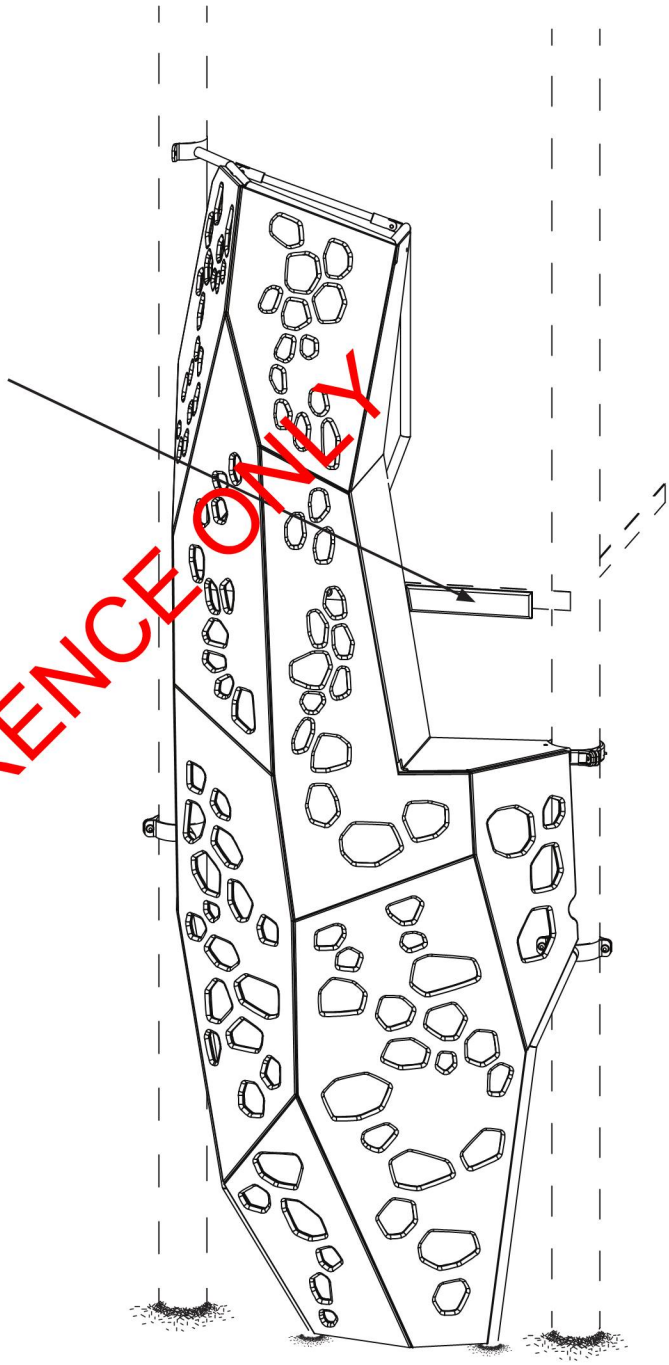

FOR REFERENCE ONLY

© 2024 By Landscape Structures. All rights reserved.

48” CRUX CLIMBER

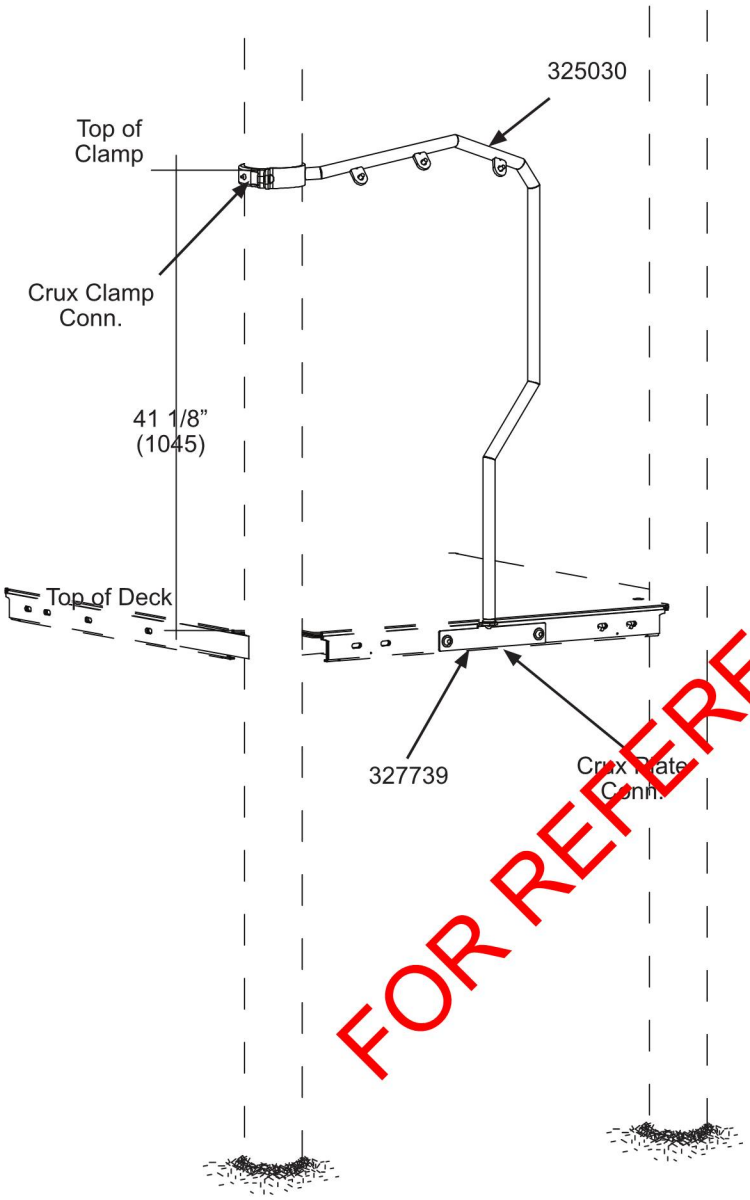

DETAIL CRUX CLAMP CONN.

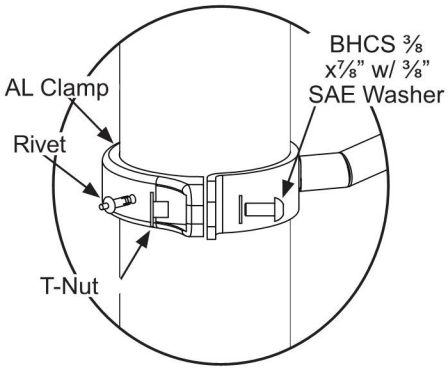

DETAIL CRUX PLATE

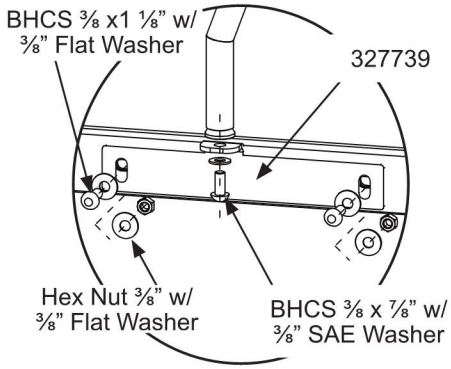

FOR REFERENCE ONLY

© 2024 By Landscape Structures. All rights reserved.

48” CRUX CLIMBER

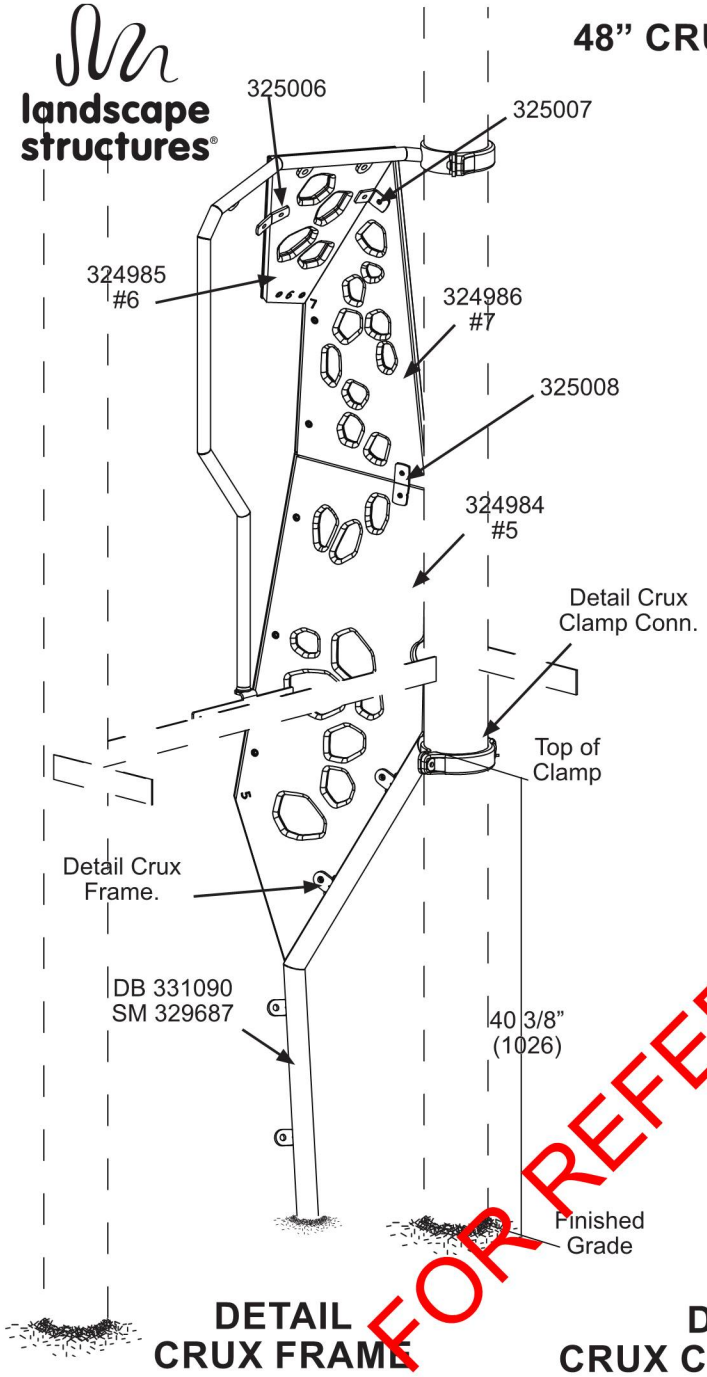

DETAIL 325007

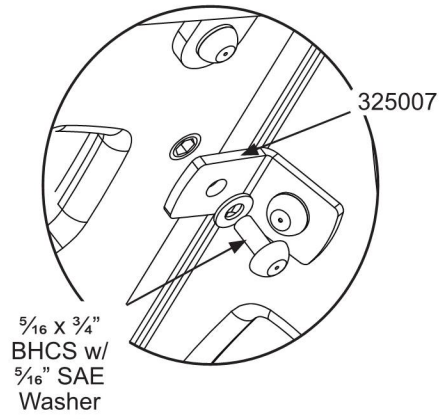

DETAIL 325008

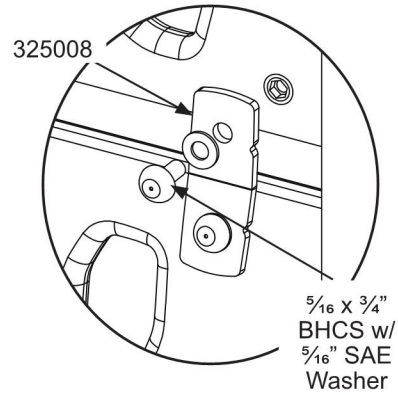

FOR REFERENCE ONLY

DETAIL CRUX FRAME

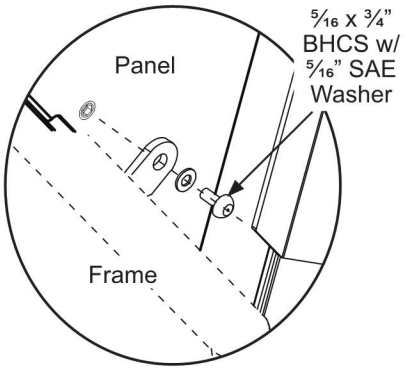

DETAIL CRUX CLAMP CONN.

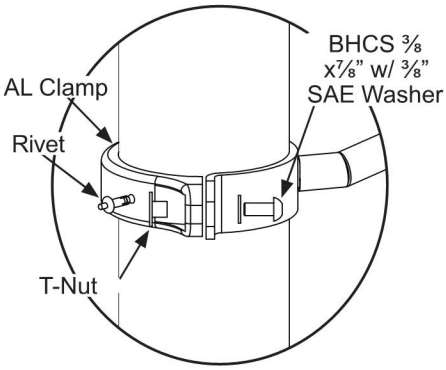

DETAIL 325006

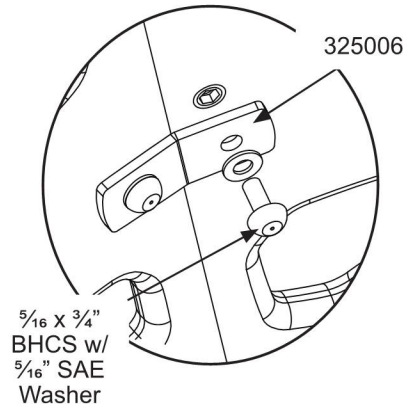

© 2024 By Landscape Structures. All rights reserved.

48” CRUX CLIMBER

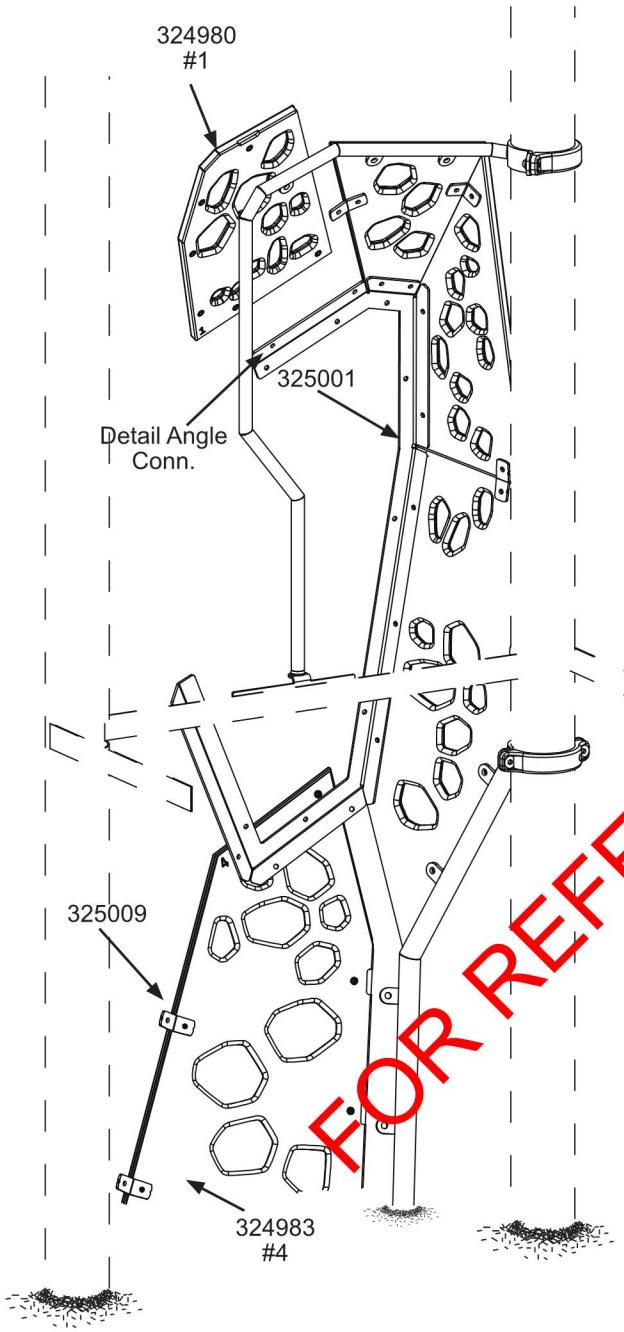

DETAIL 325009

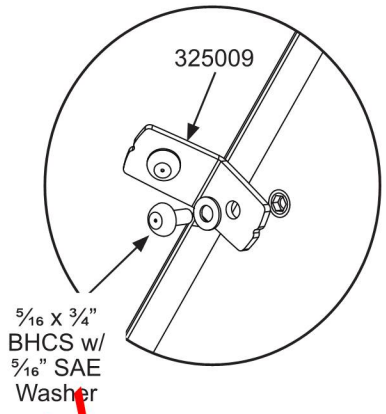

DETAIL ANGLE CONN.

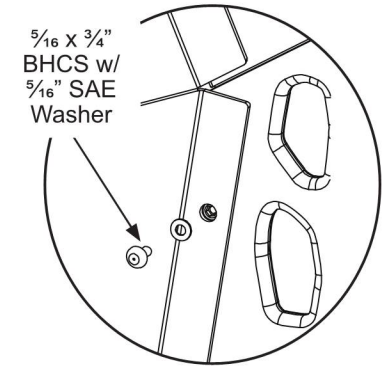

DETAIL CRUX FRAME

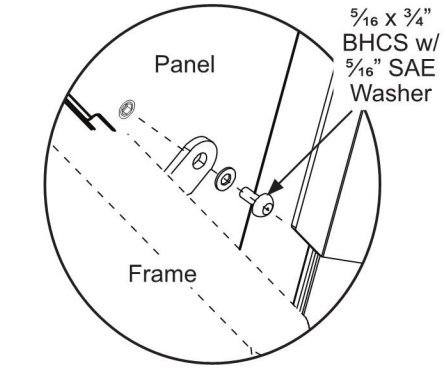

FOR REFERENCE ONLY

601 7TH STREET SOUTH, DELANO, MINNESOTA 55328-8605 888-574-4678 LSI Install Help 888-438-6574 LSI Direct 763-972-5200 Int. FAX (763) 972-3185
© 2024 By Landscape Structures. All rights reserved.

landscape structures®

48” CRUX CLIMBER

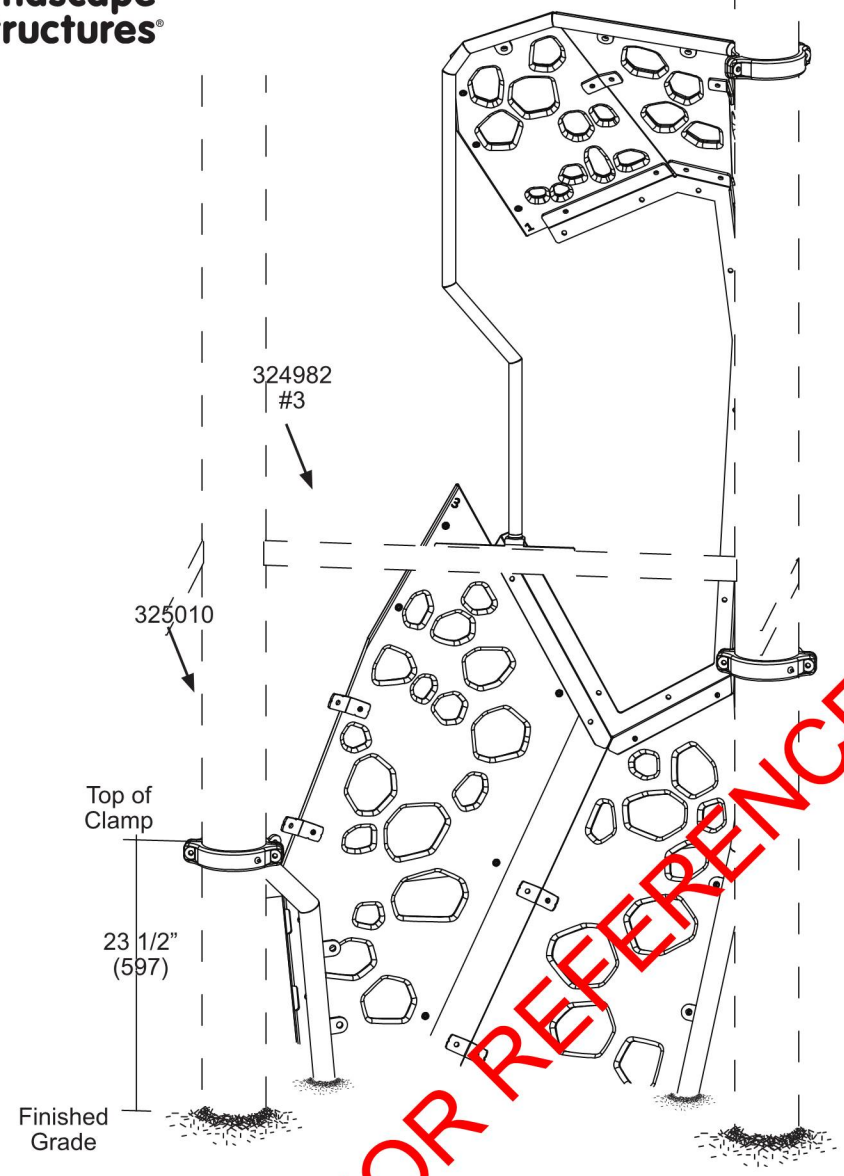

DETAIL CRUX FRAME

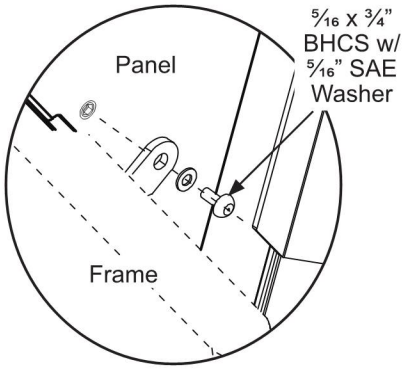

DETAIL CRUX CLAMP CONN.

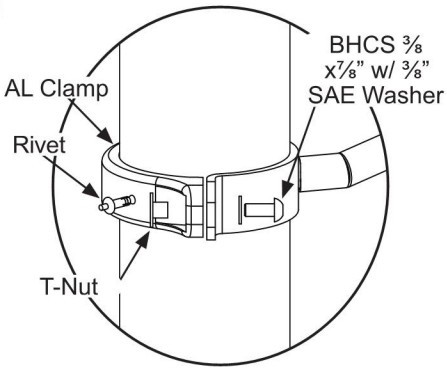

FOR REFERENCE ONLY

DETAIL 325010

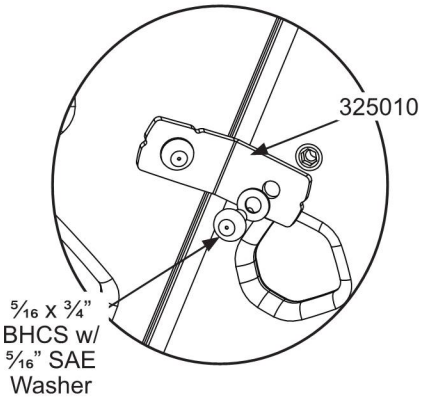

DETAIL ANGLE CONN.

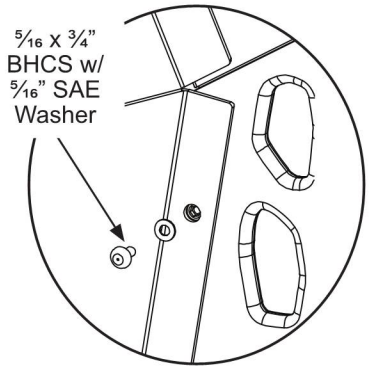

© 2024 By Landscape Structures. All rights reserved.

48” CRUX CLIMBER

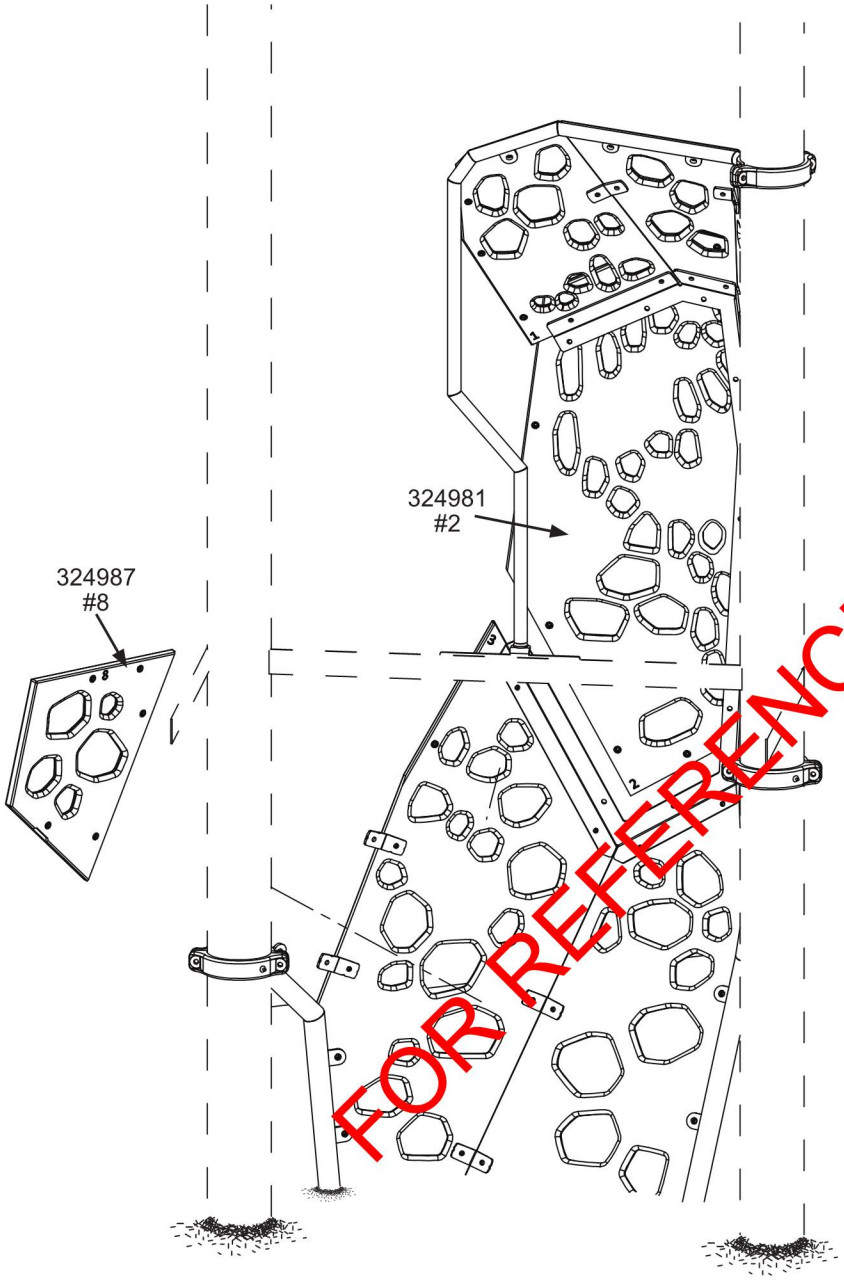

FOR REFERENCE ONLY

DETAIL
ANGLE CONN.

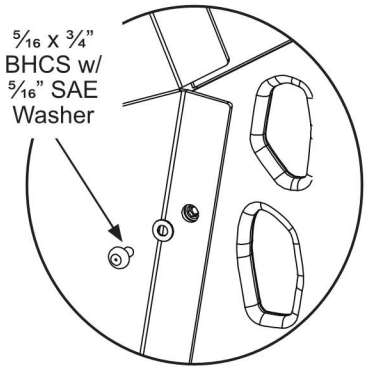

© 2024 By Landscape Structures. All rights reserved.

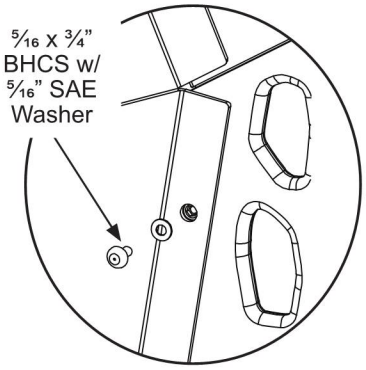

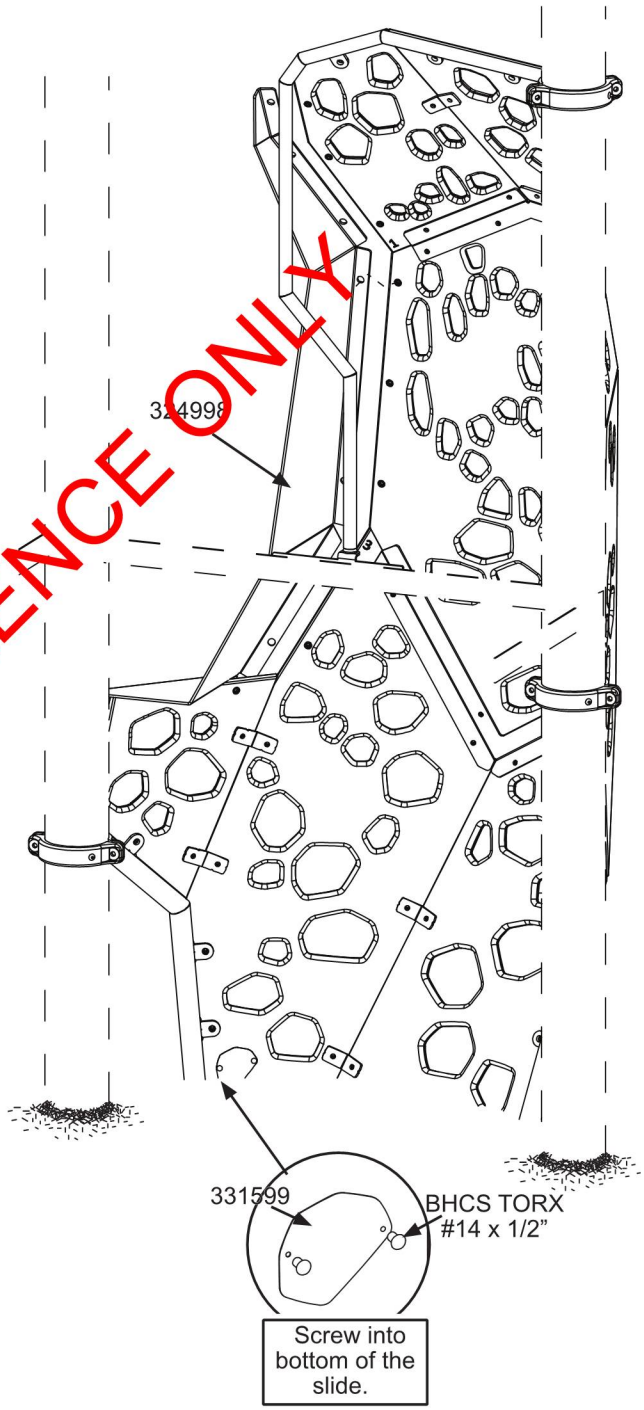

FOR REFERENCE ONLY

© 2024 By Landscape Structures. All rights reserved.

TALK TUBE SIGN

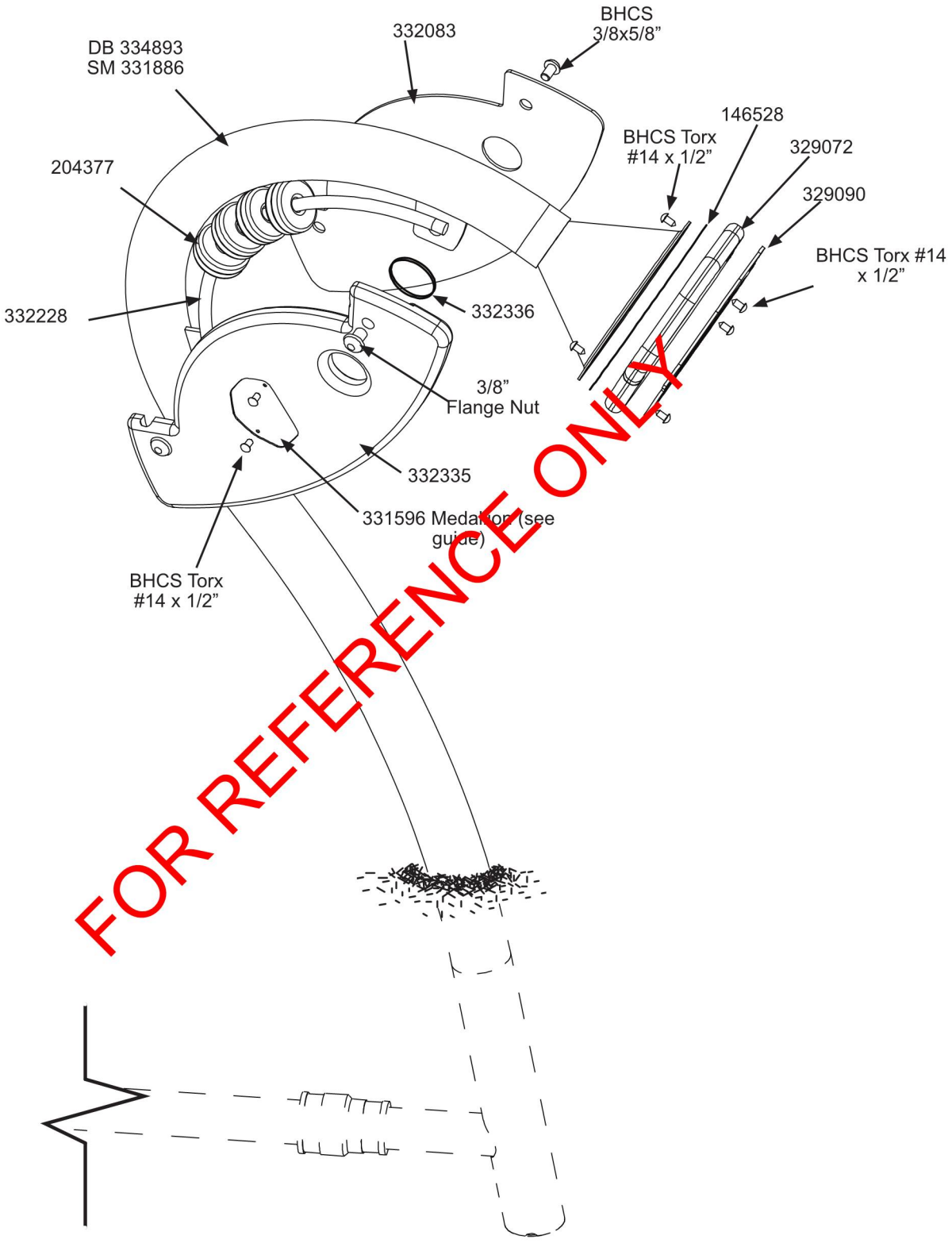

FOR REFERENCE ONLY

© 2024 By Landscape Structures. All rights reserved.

TALK TUBE POST

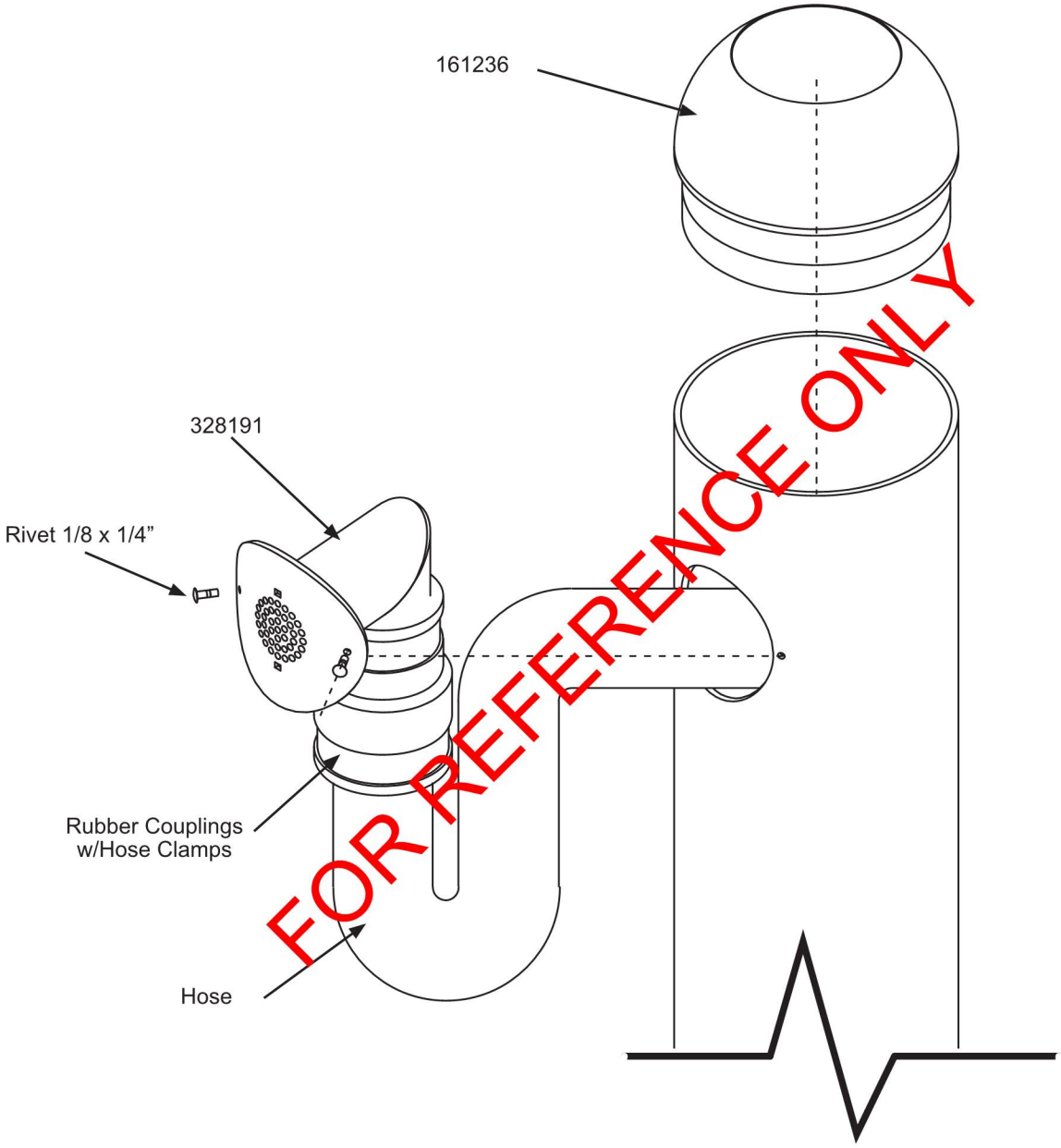

FOR REFERENCE ONLY

© 2024 By Landscape Structures. All rights reserved.

landscape structures®

FOR DIRECT BURY

POUR CONCRETE TO SECURE POST AND COMPONENTS. THE WAVE BELT CLIMBER AND SHADE (IF INCLUDED) MUST BE INSTALLED AFTER POSTS ARE SET IN CONCRETE. HOLE LOCATION A44 WILL BE SECURED AFTER THE WAVE BELT CLIMBER IS INSTALLED.

FOR SURFACE MOUNT

POST MUST BE ANCHORED IN PLACE BEFORE INSTALLING THE WAVE BELT CLIMBER. THE FOOTERS AT LOCATION A49 AND A50 WILL BE ANCHORED AFTER THE WAVE BELT CLIMBER IS SECURED.

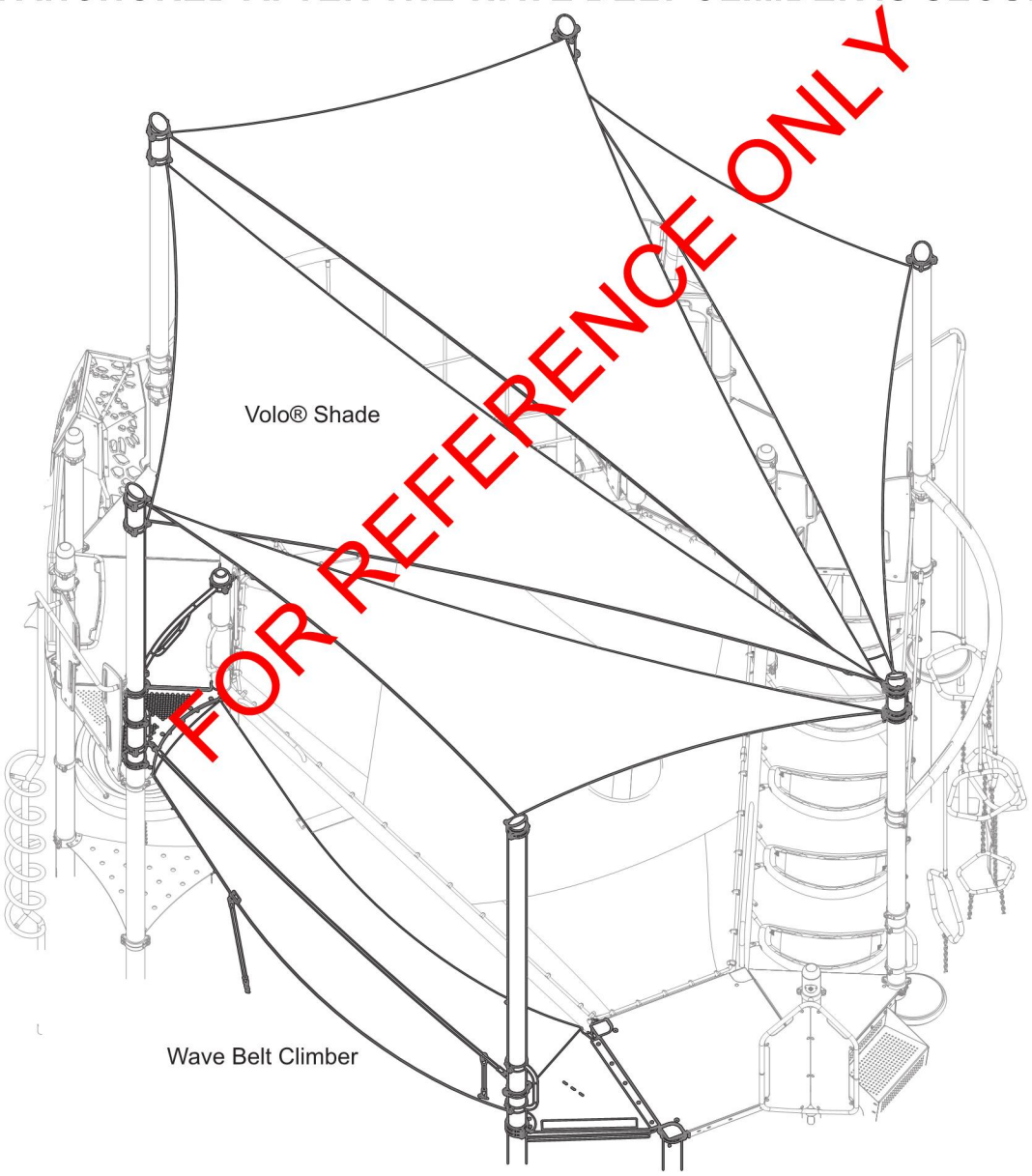

FOR REFERENCE ONLY

© 2024 By Landscape Structures. All rights reserved.

landscape structures®

WAVE BELT CLIMBER

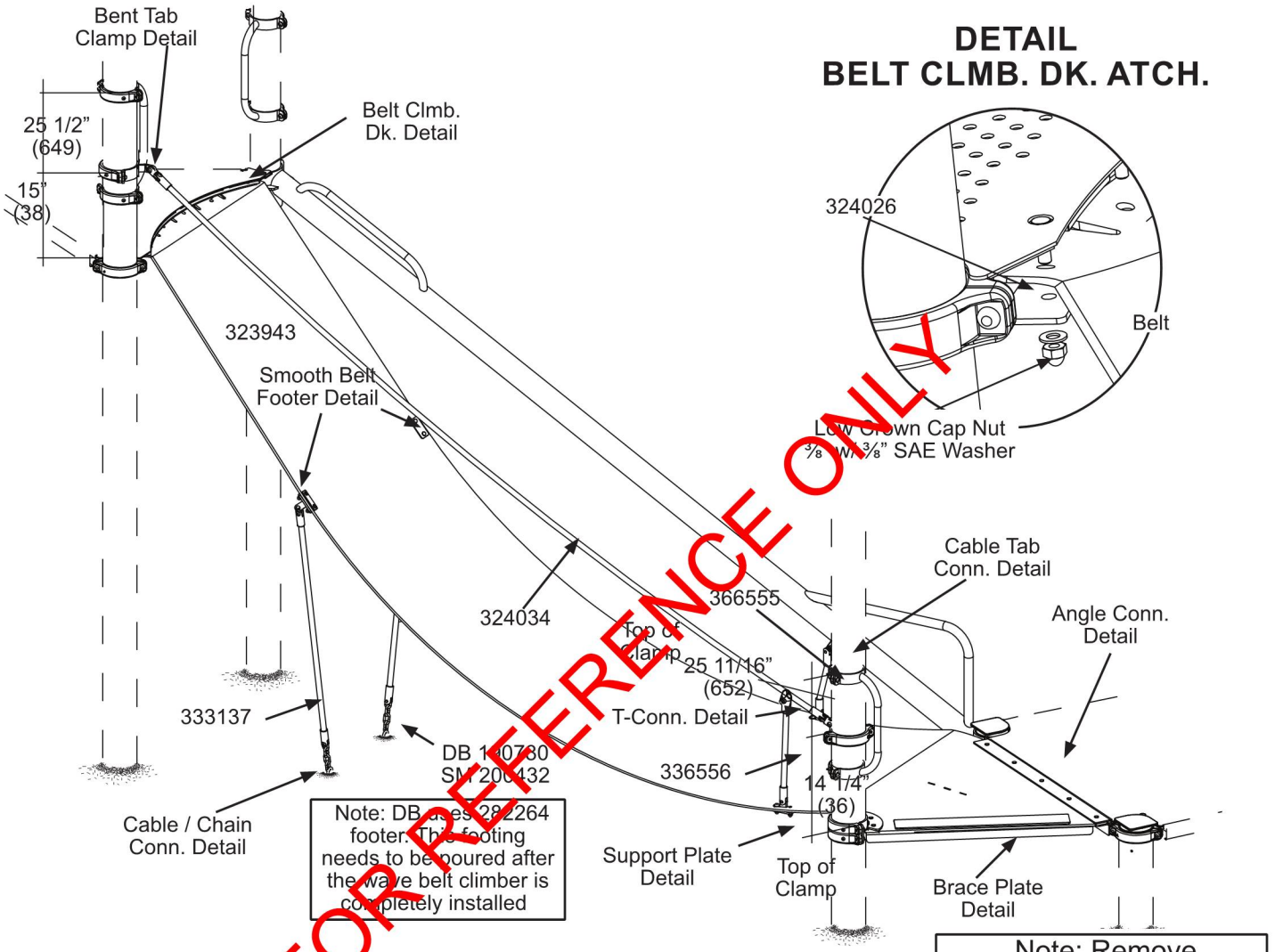

FOR REFERENCE ONLY

DETAIL CABLE / CHAIN CONN.

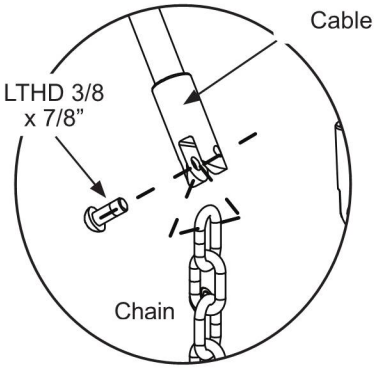

DETAIL PINCH PLATE CORNER

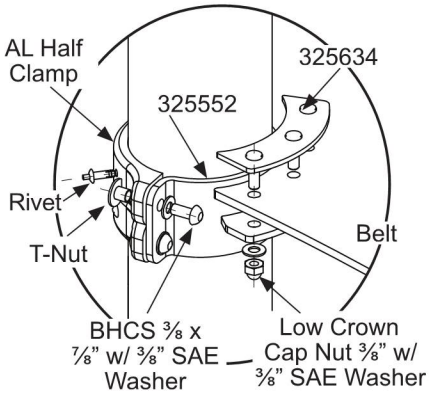

Cable #	Approx. Length
324034	131-5/8"
336556	14-15/16"
336555	10-7/8"
329875	117-7/16"
333137	40-7/8"

© 2024 By Landscape Structures. All rights reserved.

WAVE BELT CLIMBER

DETAIL BRACE PLATE

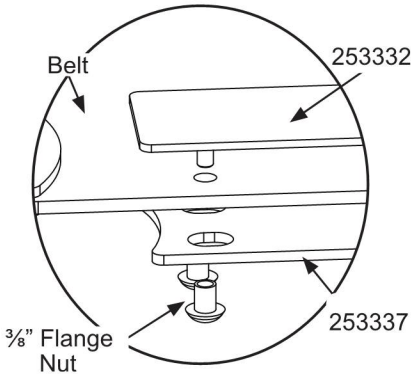

DETAIL ANGLE CONN.

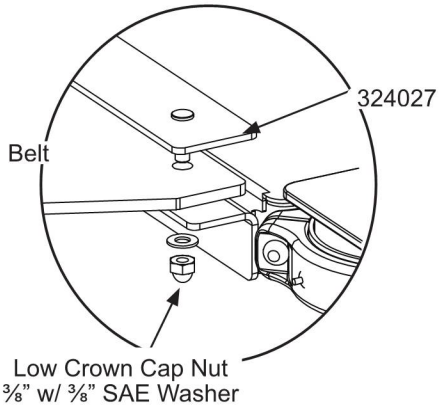

DETAIL SMOOTH BELT FTR.

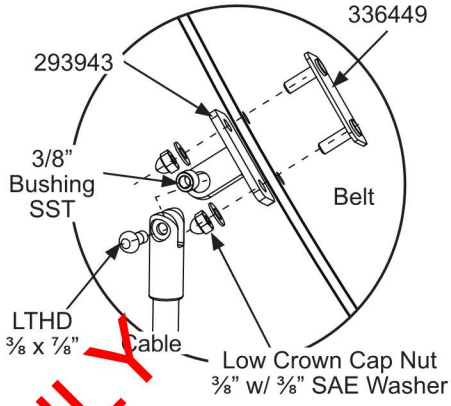

DETAIL BENT TAB CLAMP

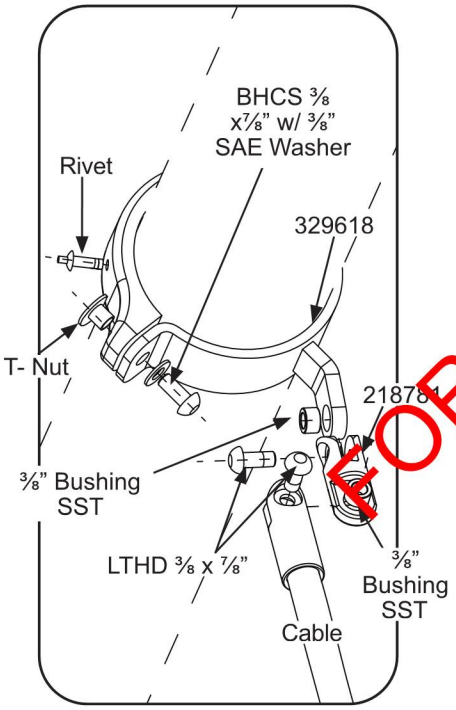

DETAIL T-CONN.

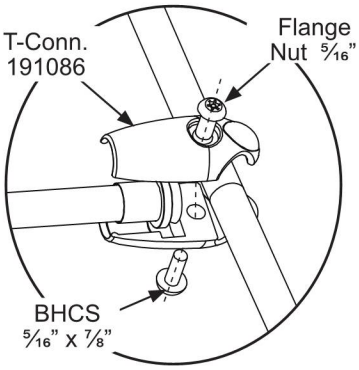

DETAIL CABLE TAB CONN.

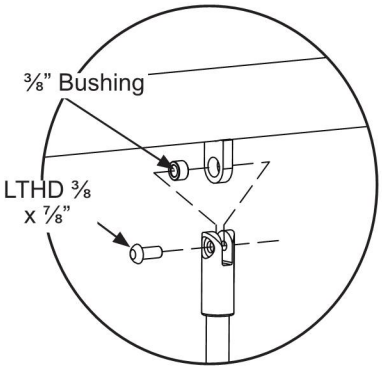

DETAIL SUPPORT PLATE

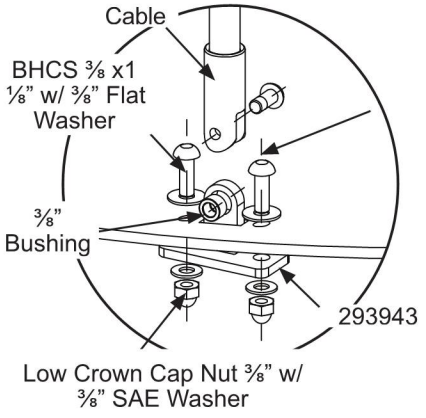

FOR REFERENCE ONLY

© 2024 By Landscape Structures. All rights reserved.

landscape structures®

Smart Play ® 323659 Vo

Parts List

Number	Product Name	QTY. SM	QTY. DB
324080	16.75i RUNG TUBE	7	7
325634	16i BELT CLAMP 2 PVC	1	1
324027	16i BELT CLAMP PVC	1	1
324029	16i BELT MOUNTING BRACKET	1	1
144696	1-STEP PVC	1	1
323727	33.375i RUNG TUBE W/CENTER TAB	1	1
326166	60i TALK TUBE POST SM	1	0
324026	80i BELT CLAMP	1	1
336555	80i BELT CLIMBER BEAM ROPE	1	1
333740	80i BELT CLIMBER DECK PVC	1	1
336556	80i BELT CLIMBER POST ROPE	1	1
324034	80i BELT CLIMBER ROPE	1	1
323943	80i CLIMBER BELT	1	1
333137	80i CLIMBER BELT ROPE	2	2
336449	80i CLIMBER BELT TOP PLATE PVC	2	2
335983	80i CLIMBER POST INSTALL BRACKET	1	1
325552	80i POST BELT CLAMP	1	1
329920	92i TALK TUBE POST DB	0	1
273409	ALPINE SLIDE EXIT SUPPORT 72i PB SM	1	0
264338	ALPINE SLIDE EXIT SUPPORT DB	0	1
264335	ALPINE SLIDE LOWER	1	1
273410	ALPINE SLIDE MID SUPPORT 72i PB SM	1	0
264339	ALPINE SLIDE MID SUPPORT DB	0	1
264337	ALPINE SLIDE UPPER 96i PB	1	1
324731	BELT CLAMP PLATE PVC	3	3
324730	BELT POST CLAMP	3	3
326037	BELT SUPPORT	2	2
326039	BELT TRI DECK	2	2
326114	BELT TRI DECK 2	1	1
253337	BELTING MENDING PLATE PVC	1	1
192748	Cable Ball Knot Half	12	12
161236	CAP POST LOGO PNT (POST)	1	1
108592	CAP STD FLSH MNT POST PVC	3	3
154460	CLIMB ACROSS POD	5	5
324898	CLIMBING PUCK	5	5
325437	CLIMBING PUCK MOUNTING PLATE	5	5
325428	CLIMBING PUCK ROPE CASTING	10	10
106022	CLMP DK HGR	20	20
105327	CLMP HALF 5i AL	102	102
113729	CLMP OFFSET 5i RAIL HGR	17	17
328477	CORKSCREW 80iDK 2iSM PNT	1	0
334437	CORKSCREW 80iDK/DB PNT	0	1
323801	CROSS POD PLT PNT	6	6
325044	CROSS POD ROTO	6	6
332536	Crux 48i Climber Perm Bumper	1	1
331084	Crux 48i Climber Tube Weld Stl 1 DB	0	1
331085	Crux 48i Climber Tube Weld Stl 2 DB	0	1
325001	Crux 48in Climber Corner Stl 1	1	1
324998	Crux 48in Climber Entrance Stl PVC	1	1
324980	Crux 48in Climber Panel 1	1	1
324981	Crux 48in Climber Panel 2	1	1
324982	Crux 48in Climber Panel 3	1	1
324983	Crux 48in Climber Panel 4	1	1
324984	Crux 48in Climber Panel 5	1	1
324985	Crux 48in Climber Panel 6	1	1
324986	Crux 48in Climber Panel 7	1	1
324987	Crux 48in Climber Panel 8	1	1
325028	Crux 48in Climber Tube Stl 1 SM	1	0
325029	Crux 48in Climber Tube Stl 2 SM	1	0
325030	Crux 48in Climber Tube Stl 3	1	1
328569	Crux 80i Climber Bracing Stl 1	1	1
328570	Crux 80i Climber Bracing Stl 2	1	1
328542	Crux 80i Climber Entrance Stl PVC	1	1
328400	Crux 80i Climber Panel 1	1	1
328401	Crux 80i Climber Panel 2	1	1
328402	Crux 80i Climber Panel 3	1	1
328403	Crux 80i Climber Panel 4	1	1
328404	Crux 80i Climber Panel 5	1	1
328405	Crux 80i Climber Panel 6	1	1
328406	Crux 80i Climber Panel 7	1	1
328407	Crux 80i Climber Panel 8	1	1
328408	Crux 80i Climber Panel 9	1	1
333326	Crux 80i Climber Perm Bumper	1	1
331088	Crux 80i Climber Tube Weld Stl 1 DB	0	1
331090	Crux 80i Climber Tube Weld Stl 2 DB	0	1
329099	Crux 80i Rope Hold	1	1
329686	Crux 80in Climber Tube Weld Stl 1 SM	1	0
329687	Crux 80in Climber Tube Weld Stl 2 SM	1	0
329688	Crux 80in Climber Tube Weld Stl 3	1	1
165338	CUST CHN 1/4i P70 6-3/4i	2	0
184271	CUST FTR SM PNT	22	0
130716	DBL POLY WAVE SLD 48/56	1	1
171211	DK TO BRDG CONN WELDT	2	2
325740	ENTRANCE HANDHOLD FRAME	1	1
156806	EVOS POST POD CASTING PNT	6	6
147958	FIREPOLE 48iDK SM PNT	0	1
147964	FIREPOLE 48iDK SM PNT	1	0
302950	FLEXMESH CAST HOOK COVER	50	50
334893	GOOSE NECK TALK TB SM	1	0
332335	GOOSE NECK TALK TB PERM	1	1
327467	GRAB BAR W/5i CLAMPS PNT	6	6
131987	HOOD DBL SLD 34i X 37i	2	2
324032	INCLINED CURVED RUNG LADDER BEAM	1	1
324023	INCLINED CURVED SWIGGLE STIX BEAM	1	1
324587	LARGE LOOP	3	3
324288	LOOP CLIMBER BEAM	1	1
334114	LOOP CLIMBER CHAIN PVC	2	2
32[illegible]	LOOP CLIMBER ROPE 1	2	2
324290	LOOP CLIMBER ROPE 2	1	1
324291	LOOP CLIMBER ROPE 3	1	1
324292	LOOP CLIMBER ROPE 4	1	1
326272	LOWER BELT CLAMP 1 PVC	2	2
326275	LOWER BELT CLAMP 2 PVC	1	1
335881	LOWER BELT CROSS BOTTOM CLAMP PVC	1	1
335872	LOWER BELT CROSS CLAMP PVC	1	1
326112	LOWER BELT POST CLAMP	4	4
326127	LOWER BELT POST CLAMP 2	1	1
326269	LOWER POST BELT CLAMP PVC	4	4
323654	LSI FLEXX BEAM 1	1	1
323655	LSI FLEXX BEAM 2	1	1
323656	LSI FLEXX BEAM 3	1	1
323664	LSI FLEXX DECK PLATE	3	3
207750	MAGNET HOLDER ASM	4	4
332228	MAGNET ROD 11.625i R	1	1
332336	MAGNIFYING LENS	1	1
324586	MEDIUM LOOP	1	1
327091	MEDIUM LOOP 2	1	1
116917	MID SPRT 54i DB	0	1
116908	MID SPRT 64i DB	0	1
134567	MID SUPT 19-1/4i SM	1	0
134565	MID SUPT 29i SM	1	0
327187	MODIFIED ROPE CLAMP PNT	2	2
327343	NET CLAMP WITH BENT TAB PNT	2	2
324906	OODLE HANGOUT ROPE	4	4
172045	OODLE SWING BUMPER	2	2
282264	OODLE SWING FOOTER PLATE PNT	0	6
193982	OODLE SWING SEAT	1	1
100583	PBOLT 40-7/16i AL PNT	2	2
328290	PENTAGON SLIDER	3	3
327388	PERIMETER CABLE 203i	1	1
177932	POD BOLT PLATE	5	5
107447	POST FLSH 17-3/8i STL SM	3	0
107492	POST FLSH 49-3/8i STL DB	0	3
107525	POST W/CAP PB 124i STL DB	0	8
107484	POST W/CAP PB 126i STL SM	2	0
112369	POST W/CAP PB 134i STL SM	4	0
142125	POST W/CAP PB 156i STL DB	0	2
124091	POST W/CAP PB 164i STL DB	0	4

FOR REFERENCE ONLY

107472	POST W/CAP PB 92i STL SM	8	0
161898	PROPRIETARY NET CLMP	8	8
329618	ROPE CLAMP WITH BENT TAB	6	6
218781	ROPE SWIVEL TAB	8	8
154461	ROTO POST E-POD	6	6
293943	RPL ROPE CONN PL PNT	4	4
173611	RUBBER RDCR CPLG W/2CLMPS	2	2
324190	RUNG LADDER ROPE #1	1	1
324191	RUNG LADDER ROPE #2	1	1
324192	RUNG LADDER ROPE #3	1	1
324193	RUNG LADDER ROPE #4	1	1
324195	RUNG LADDER ROPE #5	1	1
324196	RUNG LADDER ROPE #6	1	1
324197	RUNG LADDER ROPE #7	1	1
325094	SADDLE ROPE	5	5
329321	SADDLE ROPE 2	5	5
329347	SADDLE ROPE 3	1	1
329875	SADDLE ROPE 4	2	2
326105	SADDLE ROTO POD	5	5
331886	SAY HELLO TO A FRIEND TALK TUBE	0	1
247871	SINGLE ROPE FOOTER HDG	0	10
325896	SLIDE DECK GRIPX	1	1
326169	SLIDE DECK KICK PLATE PNT	1	1
325689	SLIDE DECK PVC	1	1
324585	SMALL LOOP	1	1
327084	SMALL LOOP 2	1	1
331471	Smart Play BK Pod Net Asm	1	1
327784	SMART SHADE FIREPOLE HANDHOLD	4	4
327782	SMART SHADE STANDARD HANDHOLD	6	6
255135	SPARE PARTS KIT PB	1	1
324870	SPRT CROSS BAR OODLE HANGOUT	2	2
151013	SPRT DBL POLY SM 4-1/2i	2	0
150941	SPRT POLY SLD DB PNT ASM	0	2
181376	SPRT XFR SM STEP ANG PNT	1	0
181374	SPRT XFR STEP DB PNT	0	
145656	SQ DECK PB	3	
325265	STL HOOD CLAMP W/TAB 30 DEG		1
253332	STUD MENDING PLATE PVC	1	1
324239	SWIGGLE KNOTS ROPE #1	1	1
324240	SWIGGLE KNOTS ROPE #2	1	1
324241	SWIGGLE KNOTS ROPE #3	1	1
324242	SWIGGLE KNOTS ROPE #4	1	1
324243	SWIGGLE KNOTS ROPE #5	1	1
329072	TALK TUBE COVER DIGIFUSE PRM	1	1
328191	TALK TUBE RECEIVER	1	1
191086	T-CONNECTOR	30	30
145663	TRI DECK EXT	4	4
322278	TUBE RUNG CAP CAST	16	16
324733	UNDER BELT 1	1	1
324736	UNDER BELT 2	1	1
326116	UNDER BELT 3	1	1
327469	UPPER CROSSBAR WITH GRAB BAR PNT	1	1
326440	VERTICAL CABLE 37-1/2i ASM	2	2
334879	VOLO™ FLEXX NET	1	1
331599	BLUEJAY DGI	1	1
331602	EASTERN BLUEBIRD DGI	1	1
331603	NORTHERN CARDINAL DGI	1	1
331637	ROUTE AND BIRD FIND PANEL 1 DGI	1	1
331638	ROUTE AND BIRD FIND PANEL 2 DGI	1	1
329090	TALK TUBE DGI AL PL	1	1
332083	TALK TUBE MAGNET PANEL DGI	1	1
331604	AMERICAN GOLDFINCH DGI	1	1
331596	HUMMINGBIRD DGI	1	1
331598	KINGFISHER DGI	1	1
331600	LILAC BREASTED ROLLER DGI	1	1
200437	CHAIN 20i	0	3
200439	CHAIN 25i	0	2
200440	CHAIN 27.5i	0	1
200445	CHAIN 40i	0	2
200432	CHAIN 5i	10	0
179682	CHN 1/4i P70 13i	1	0
194074	CHN 1/4i P70 14i LG	2	1
198497	CHN 1/4i P70 17-5/16i LONG	1	2
190780	CHN 1/4i P70 18-9/16i	0	10
196890	CHN 1/4i P70 24-1/4i	2	0
196891	CHN 1/4i P70 25-1/2i	0	1
315792	CHN 1/4i P70 3i	1	0
136721	CHN 1/4i P70 9-1/4i	3	0
326126	.1875 BRACKET 120 DEG PNT	2	2
100292	BHCS 6L LTHD 3/8x1-1/4SST	54	54
237639	BHCS 6LP #10 x 1/2i SST W/O PATCH	39	39
162374	BHCS 6LP 1/4 X 3/4i SST	32	32
100171	BHCS 6LP 3/8x1-1/2iSSTPAT	12	12
100198	BHCS 6LP 3/8x1-1/8i SST	148	148
123224	BHCS 6LP 3/8x1-11/16i SST	7	7
113027	BHCS 6LP 3/8x1-3/8i SST	30	30
100199	BHCS 6LP 3/8x2-1/4i SST	3	3
100200	BHCS 6LP 3/8x3-1/2i SST	4	4
124460	BHCS 6LP 3/8x3-3/4i SST	6	6
100195	BHCS 6LP 3/8x3-[illegible] SST	34	34
100196	BHCS 6LP 3/8x7/8i SST	247	247
223807	BHCS 6LP 5/16i-18 X 3/4i SST	168	168
132626	BHCS 6LP 5/16x7/8i SST	15	15
100201	BHCS 6LP 5/8x1-1/2i SST	1	1
100203	BHCS 6LP 5/8x2-1/4i SST	3	3
100290	BHCS 6LP LTHD 3/8x7/8iSST	80	80
157704	BHCS 6LP LTHD 7/16x2i SST	5	5
129671	BHCS TORX #14 x 1/2 SST	16	16
127463	BIT HEX TPP T27 (TORX)	2	2
266103	BOLT CAP BOT PART A CARBON	1	1
266104	BOLT CAP TOP PART B CARBON	1	1
13[illegible]	BOLT LINK SST	36	36
157[illegible]	BSHG .439i ID X 1.156 SST	5	5
111442	BUSH RUBBER #871	12	12
106962	BUSHING 5/8 OD X 1/2 LG SST	40	40
127179	BUSHING 5/8 OD X 3/8 LG SST	74	74
162729	CONN PLUG HALF ABS	10	10
327739	Crux 48i Deck Mount Bracket	2	2
325006	Crux 48in Climber Bracket Stl 1	1	1
325007	Crux 48in Climber Bracket Stl 2	1	1
325008	Crux 48in Climber Bracket Stl 3	1	1
325009	Crux 48in Climber Bracket Stl 4	2	2
325010	Crux 48in Climber Bracket Stl 5	2	2
328577	Crux 80i Climber Bracket Stl 1	1	1
328578	Crux 80i Climber Bracket Stl 2	1	1
176046	EXP ANCHOR 1/2x3-3/4i ZP	148	0
148686	FHCS 6LP 3/8x3/4i SST PAT	4	4
100353	FLG NUT 6LP 3/8-16 SST	44	44
175006	FLG NUT 6LP 5/16-18 SST	65	65
172311	HDW PB FLUSH PST CAP ATCH	3	3
336012	HDW PKG INSTALL BRACKET	1	1
100321	NUT HEX PATCH 3/8-16 SST	21	21
100322	NUT HEX STD 1/2-13 SST	148	0
100327	NUT HEX STD 3/8-16 SST	62	62
100349	NUT L/C CAP 3/8-16 SST	110	110
100351	NUT MOD-T 3/8-16 SST	218	218
100611	RIVET 1/4X3/8i DRV AS	3	3
100610	RIVET 1/4X5/8i Drive AS	108	108
100605	RIVET 1/8X1/4i BLIND AA	6	6
323145	RUNG ROPE CLAMP CAST	18	18
326679	SADDLE ROPE CLAMP PLATE	10	10
146528	SCREEN BUG TALK TUBE	1	1
178586	SPACER 1.315 OD 1-5/8 AL	5	5
334488	SPACER SST 1.315iOD X 3/8i LG PNT	2	2
188102	T25 TORX BIT ANTI THEFT	2	2
148081	THD ROD 3/8X4 1/2 SST	2	2
279062	THD ROD 3/8x4-3/4 SST PAT	2	2
132443	TUBE 1-3/8ODX1-11/16 PNT	4	4
113468	TUBE 7/8iOD X 1-11/16i AL/PNT	14	14
173612	TUBE PLAST 1.500ID	50	50
100363	WASHER FLAT 1/2i SST	148	0
100362	WASHER FLAT 3/8i SST	154	154

FOR REFERENCE ONLY

100365	WASHER FLAT SAE 3/8i SST	423 .. 423
223956	WASHER FLAT SAE 5/16i SST	114 .. 114
129500	WASHER FLAT SAE 5/8i SST	1 1
332593	WASHER SAE #10 SST	24 24

Specifications

Installation Time: DB - 96 Hours

SM - 96 Hours

Concrete Req.: DB - 73 Cubic Feet

Weight: DB - 5570 lbs

SM - 5305 lbs

Fall Height: DB - 88" (2, 24 m)

:

Ball Knot: Rotationally molded from U.V. stabilized linear low-density polyethylene, color specified.

Bug Screen: Weave .011 (0,28 mm) Ga. charcoal fiberglass screen.

Bumper: Molded from U.V. stabilized black EPDM rubber encapsulating 11 GA (.120") (3,04 mm) HRPO steel sheet.

Cable Assy.: (Cable) Made of tightly woven polyester-wrapped, six-stranded galvanized-steel cable with a polypropylene core. (Cable Connectors) 6063-T6 aluminum.

Net: Made of tightly woven polyester-wrapped, six-stranded galvanized-steel cable with a polypropylene core, color specified. Connector fabricated from 1.250" O.D. 6063-T6 aluminum.

Chain: Steel 1/4" (6,35 mm) straight link chain, 3,150 lb (1428,82 kilograms). working load limit. Finish: ProGuard.

Clamps: Cast aluminum. Finish: ProShield, color specified.

Corkscrew: Weldment comprised of 1.900" (48,26 mm) O.D. RS-20 (.090"-.100") (2,28 mm-2,54 mm) galvanized steel tubing, and 1.315" (33,40 mm) O.D. RS-20 (.080"-.090") (2,03 mm-2,28 mm) galvanized steel tubing. Finish: ProShield, color specified.

Cable: Made from 1/4" (6,35 mm) 7-19 galvanized steel cable and fastened with galvanized steel cable clamp.

Magnet Rod: 1/2" (12,7 mm) diameter stainless steel.

Exit Support: Weldment comprised of 2.375" (60,33 mm) O.D. RS-20 (.095" - .105") (2,41 mm x 2,66 mm) galvanized steel tubing and 1/4" x 3" (6,35 mm x 76 mm) mounting plate. Finish: ProShield, color specified.

Fasteners: Primary fasteners shall be socketed and pinned tamperproof in design, stainless steel (SST) per ASTM F 879 unless otherwise indicated (see specific product installation/specifications).

Firepole: Weldment comprised of 1.900" (48,26 mm) O.D. RS-20 (.090"-.100") (2,28 mm-2,54 mm) galvanized steel tubing, and 1.315" (33,40 mm) O.D. RS-20 (.080"-.090") (2,03 mm-2,28 mm) galvanized steel tubing. Finish: ProShield, color specified.

Handhold Panel: Recycled Permalene, color specified.

Panels: Recycled Permalene, color specified.

Magnet Holder: Comprised of aluminum housing with ceramic magnet.

Net Clamp: Weldment comprised of 1/4" x 1 3/4" (6,35 mm x 44,45 mm) HRPO flat steel and .375" (9,53 mm) stainless steel sheet. Finish: ProShield, color specified.

Net Face Plate: Fabricated from 1/4" (6,35 mm) HRPO sheet steel. Finish: ProShield, color specified.

Swing Seat Brkt: Weldment comprised of 1.66" (42,16 mm) O.D. RS-40 (.108" - .132") (2,74 mm-3,35 mm) wall galvanized steel tube, 1.000" (25,4 mm) O.D. x .750" (19,05 mm) I.D. 1018 steel tube and 7GA (.179") (4,55 mm) HRPO steel sheet. Finish: ProShield®, color specified.

Footer (DB): Weldment comprised of 1.660" (42,16 mm) O.D. RS20 (.085" - .095") (2,16 mm-2,41 mm) galvanized steel tubing and 3/16" (4,75 mm) HRPO sheet steel. Finish: ProShield, color specified.

Belt: Made from .315" (8,00 mm) thick mini rough top 3-ply rubber belting with polyester fabric plys, black in color.

Offset Hanger Clamp Assembly: Cast aluminum. Finish: ProShield, color specified.

Deck Hanger Clamp Assembly: Cast aluminum. Finish: ProShield, color specified.

Flush Mount Cap: Weldment comprised of 4.675" (118,75 mm) O.D. x 4" (102 mm) long aluminum sleeve and 3/16" (4,75 mm) thick x 4.875" (123,83 mm) top cap. Finish: Tendertuff, color specified.

Grab Bar: Weldment comprised of formed 7/8" (22,23 mm) O.D. x 11 GA (.120") (3,04 mm) and 1/4" x 1 3/4" (6,35 mm x (44,45 mm) stainless steel half clamps. Finish: TenderTuff, color specified.

Rail: Extruded from 1.125" ((28,58 mm) O.D. x .312" (7,92 mm) wall. 6005-T5 aluminum. Finish: ProShield, color specified.

Post: See PlayBooster (PB) General Specifications.

Slide Hood: Rotationally molded from U.V. stabilized linear low-density polyethylene, color specified.

Square Deck: Flange formed from 12 GA (.105") (2,66 mm) sheet steel conforming to ASTM A1011. Standing surface is perforated with 5/16" (7,92 mm) diameter holes. Deck face has (4) slotted holes for face mounting components. The finished size measures 2 5/8" x 47" x 47" (66,68 mm x 1194 mm x 1194 mm). Finish: TenderTuff, color specified.

Triangular Deck Extension: Flange formed from 12 GA (.105") (2,66 mm) sheet steel conforming to ASTM A1011. Standing surface is perforated with 5/16" (7,92 mm) diameter holes. Deck face has (4) slotted holes for face mounting components. The finished size of two of the three sides measures 2 5/8" x 37 7/8" (66,68 mm x 962,03 mm) on the face of the deck and the other side measures 2 5/8" x 43 3/4" (66,68 mm x 1111,25 mm). Finish: TenderTuff, color specified.

Handhold Panel: Permalene, color specified.

Permalene Panels: Recycled Permalene, color specified.

E-Pod: Rotationally molded from U.V. stabilized linear low-density polyethylene, color specified.

FOR REFERENCE ONLY

Pod Bolt Plate: Weldment consists of 3/16" (4,75 mm) HRPO steel plate and 3/8" (9,53 mm) thick HRPO steel plate. Finish: ProShield, color specified.

Pod: Rotationally molded from U.V. stabilized linear low-density polyethylene, color specified.

Rail Spacer: Fabricated from 1.312" (33,32 mm) O.D. x 16 Ga. (.065") (1,65 mm) steel tubing. Finish: ProShield, color specified.

Rope Tab Swivel: Made from 6061-T6 aluminum.

Exit Support: Weldment comprised of 2.375" (60,32 mm) O.D. RS-20 (.095" - .105") (2,41 mm-2,66 mm) galvanized steel tubing and 1/4" x 4" x 11 3/4" (6,35 mm x 102 mm x 298,45 mm) mounting plate. Finish: ProShield, color specified.

Attachment Block: U.V. stabilized high-density polyethylene, tan in color.

Mid-Support: Weldment comprised of 1.660" (42,16 mm) O.D. RS-20 (.085" - .095") (2,16 mm-2,41 mm) galvanized steel tubing and 1/4" x 3" (6,35 mm x 76 mm) zinc plated flat steel. Finish: ProShield, color specified.

Rail: 1 1/8" (28,58 mm) O.D. 6061-T6 aluminum extrusion with 5/16" (7,92 mm) walls. Finish: ProShield, color specified.

Slide Sections: Rotationally molded from U.V. stabilized linear low-density polyethylene, color specified.

Slide: Rotationally molded from U.V. stabilized linear low-density polyethylene, color specified.

Spacer: One-color Permalene, color specified.

Spacer Tube: Made from 6061-T6 aluminum 7/8" (22,23 mm) O.D. x 11/16" (42,85 mm). Finish: ProShield, color specified.

Beam: Weldment comprised of 2.375" (60,33 mm) O.D. RS20 (.095"-.105") (2,41 mm-2,67 mm) wall galvanized steel tubing, 3/8" (9,53 mm) thick stainless steel plate, and 1/4" (6,35 mm) HRPO flat steel. Finish: ProShield, color specified.

Step Support: Weldment comprised of 1.660" (42,16 mm) O.D. RS-20 (.080" - .095") (2,03 mm-2,41 mm) galvanized steel tubing and 1 3/4" x 1 3/4" x 1/8" (44,45 mm x 44,45 mm x 3,17 mm) HR angle. Finish: ProShield, color specified.

Clear Cover: Drape formed .177" x 30" x 47 3/8" (4,50 mm x 762 mm x 1203 mm) clear polycarbonate.

Step: Formed from 12 GA (.105") (2,66 mm) sheet steel conforming to ASTM A1011. Finish: TenderTuff,color specified.

Mid-Support: Weldment comprised of 1.900" (48,26 mm) O.D. RS-20 (.090" - .100") (2,28 mm-2,54 mm) galvanized steel tubing and 3/16" x 1 1/4" (4,75 mm x 31,75 mm) zinc plated steel strap. Finish: ProShield, color specified.

Cable: Made of tightly woven polyester-wrapped, six-stranded galvanized-steel cable with a polypropylene core. (Cable Connectors) 6061-T6 aluminum.

Footers: Comprised of HRPO steel sheet 0.250" thick. Finish: Hot Dip Galvanized.

Saddle: Rotationally molded from U.V. stabilized linear low density polyethylene, color specified.

Upper Beam: Weldment/assembly consisting of galvanized steel tube 3.5iOD .165W (RS40), Sheet HRPO .1046 (12ga) (Rib), SST sheet 3/8" (Tabs), zinc plated steel .25" (clamp), Finish: ProShield, color Specified.

Medium & large Pentagon: Weldment/assembly consists of galvanized Steel Tube 1.315iOD .083W (RS20), SST sheet 3/8" (Tabs), Finish: ProShield, color Specified.

Small Pentagon: Weldment/assembly consists of galvanized Steel Tube 1.029iOD .083W (RS20), SST sheet 3/8" (Tabs), Finish: ProShield, color Specified.

TenderTuff Chain: Steel 1/4" straight link chain, 3,150 lb. working load limit. Finish: TenderTuff, Gray in color.

Frame: Weldment/assembly consisting of galvanized steel tube 1.660iOD .0955W (RS20), Sheet HRPO 1/4" (Tabs), zinc plated steel .25" (clamp), Finish: ProShield, color Specified.

Mounting Clamps/Plates: Weldment /Assembly consist of Sheet HRPO .179" (7ga), Sheet HRPO 1/4", zinc plated steel .25" (clamp), Finish: ProShield, color Specified.

Pinch Plates: Weldment/Assembly consist of Sheet HRPO .179" (7ga), Pem Stud 3/8"OD, Finish: TenderTuff, Gray in color.

Pentagon Sliders: Recycled Core Permalene®, color specified

Rungs: Comprised of galvanized steel tube 2.375iOD .109W (RS20), End caps: Cast aluminum. Finish: ProShield, color specified.

Belt: Made from .315" thick smooth (non-textured) 3-ply rubber belting with polyester fabric plys, Black in color.

LSI Flexx™: 6.6 mm cable comprised of braided polyester strands reinforced with a 2.5 mm galvanized steel cable for strength and vandal resistance. The cable has a minimum breaking load of 771.6 lbs.

Permitter Cable: (Cable) Made of tightly woven polyester-wrapped, six-stranded galvanized-steel cable with a steel core. (Cable Connectors) 6063-T6 aluminum

Net Face Plate: Fabricated from 3/8" HRPO sheet steel, 1/2" HRPO sheet steel, Finish: ProShield®, color specified.

Hook Cover: Cast Aluminum 356-T6

Post: Comprised of 5" O.D. x 1/4"W galvanized steel tubing, Finish: ProShield, color specified.

Post Cap: Weldment/assembly comprised of galvanized steel tube 5iOD .120W (11ga), Sheet HRPO .179" (7ga), Finish: ProShield, Color Specified.

Sit-down/Grab Bars: Weldment/assembly consists of galvanized steel tube 1.125iOD .120W(11ga), zinc plated steel .25" (clamp), Finish: ProShield, color Specified.

Digi Panels: Sheet 5052-H32 Aluminum .190". Dye sublimation printed digital artwork is fused onto the powdercoated substrate.

Frame: Weldment/assembly consisting of galvanized steel tube 2.375iOD .109W (RS20), galvanized steel tube 1.660iOD .095W (RS20), Sheet HRPO .179" 7ga, Finish: ProShield, color Specified.

Frame: Weldment/assembly consisting of galvanized steel tube 1.315iOD .083W (RS20), Sheet HRPO .1196" 11ga (Tabs), zinc plated steel .25" (clamp), Finish: ProShield, color Specified.

Talk Tube Cover: Solid color Permalene®, Black in color.

FOR REFERENCE ONLY

landscape structures®

ISO 14001 CERTIFIED

ISO 9001 Certified

SAFETY N
Choose a protective surfaci
a Critical Height Value of at least the height of the Highest Accessible Part/Fall Height of the adjacent equipment. (Ref. ASTM F1487.)

18278300

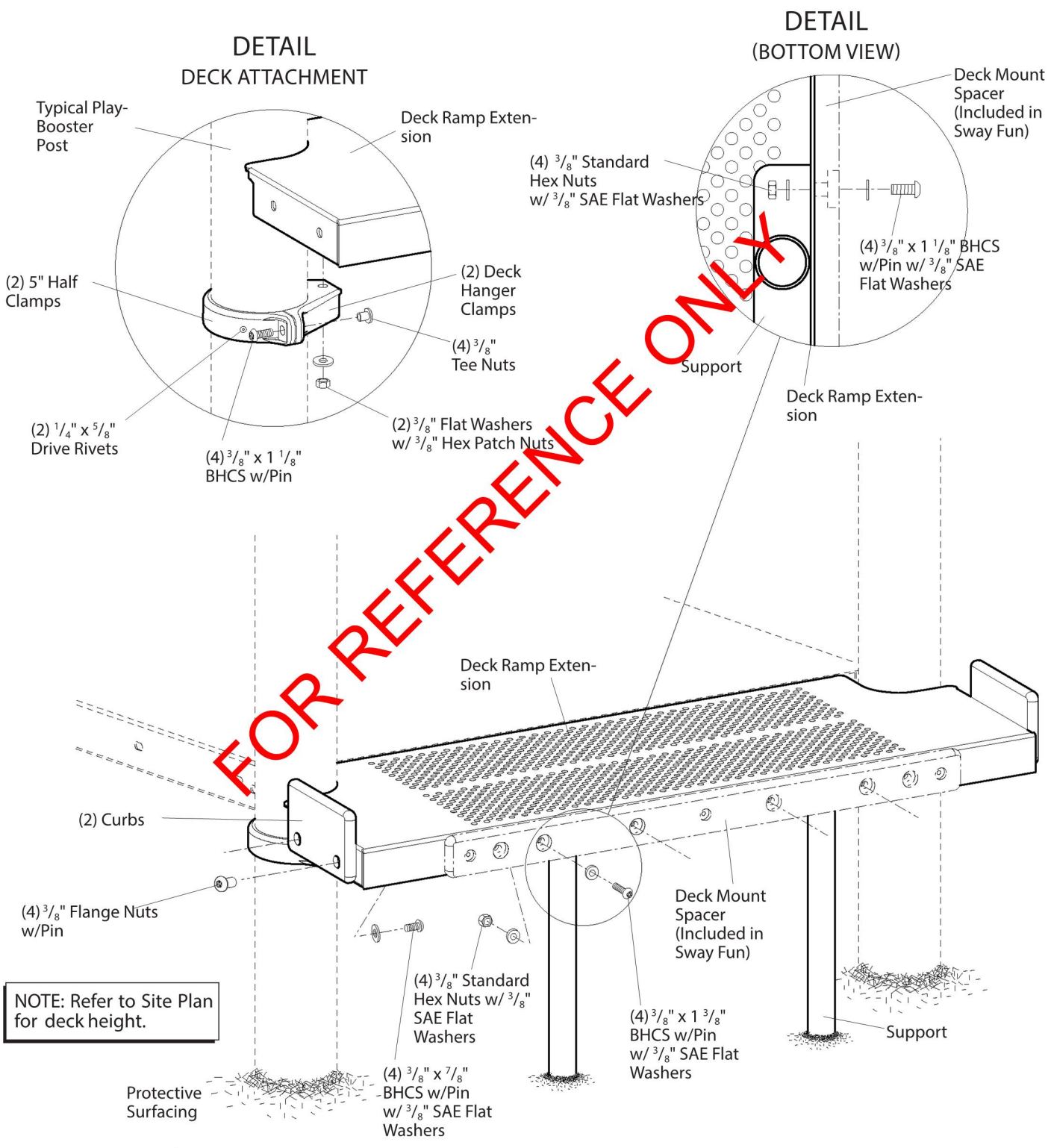

FOR REFERENCE ONLY

NOTE: Refer to Site Plan for deck height.

PlayBooster

171539 Deck Ramp Extension

601 7TH STREET SOUTH, DELANO, MINNESOTA 55328-8605 (763) 972-3391 1-888-LSI-INST (1-888-574-4678) FAX (763) 972-3185

© 2012 by Landscape Structures. All rights reserved.

landscape structures®

SAFETY N
Choose a protective surfaci
a Critical Height Value of at least the height of the Highest Accessible Part/Fall Height of the adjacent equipment. (Ref. ASTM F1487.)

171541a

PLAN VIEW/FOOTING LAYOUT

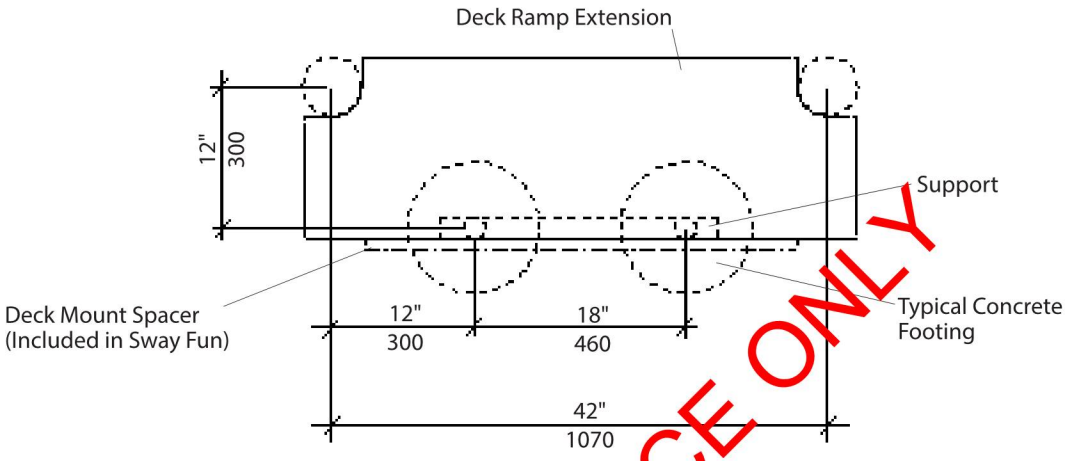

FOR REFERENCE ONLY

DETAIL
SURFACE MOUNT

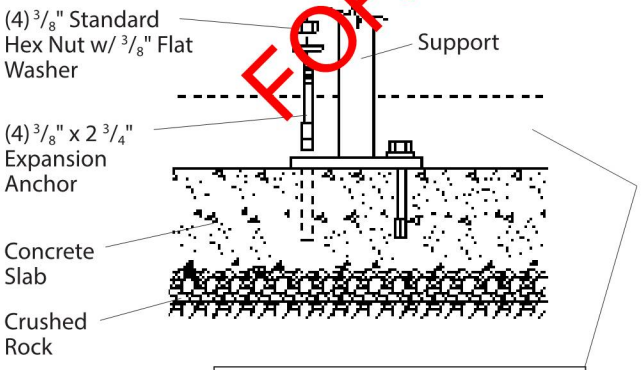

NOTE: Sufficient protective surfacing must cover hardware to satisfy fall height requirements.

DETAIL
DIRECT BURY

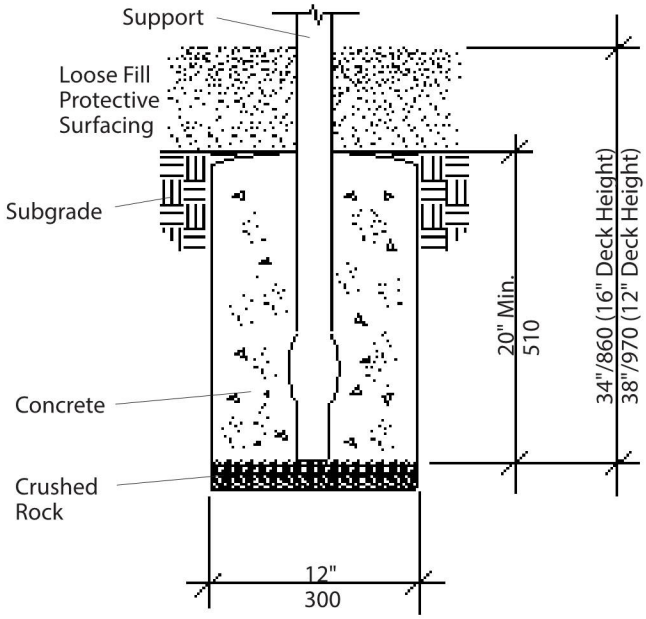

PlayBooster

171539 Deck Ramp Extension

601 7TH STREET SOUTH, DELANO, MINNESOTA 55328-8605 (763) 972-3391 1-888-LSI-INST (1-888-574-4678) FAX (763) 972-3185

© 2012 by Landscape Structures. All rights reserved.

PlayBooster 171539 Deck Ramp Extensi

landscape structures®

J:\SPECS\182\24598500.P65

Parts

Part#	Description	Qty.
105327-01	5" Half Clamp, Specify Color	2
106022-00	Deck Hanger Clamp, Specify Color	2
182781-00	Curb, Specify Color	2
163641-00	Deck Ramp Extension, Specify Color	1
181399-00	Support, DB, Specify Color	1
181402-00	Support, 2" SM (12" Deck), Specify Color	1
181400-00	Support, 2" SM (16" Deck), Specify Color	1
100610-00	1/4" x 5/8" Drive Rivet, AL/SST	2
245986-00	**Deck Ramp Extension Hardware Package**	1
113027-00	3/8" x 1 3/8" BHCS w/Pin, SST	8
100321-00	3/8" Hex Patch Nut, SST	2
100327-00	3/8" Standard Hex Nut, SST	4
100351-00	3/8" Tee Nut, SST	4
100362-00	3/8" Flat Washer, SST	2
100365-00	3/8" SAE Flat Washer, SST	12
100196-00	3/8" x 7/8" BHCS w/Pin, SST	4
100353-00	3/8" Flange Nuts w/Pin, SST	4
111394-00	**4 Hole (SM) Hardware Package**	1
100263-00	3/8" x 2 3/4" Expansion Anchor	4
100327-00	3/8" Standard Hex Nut, SST	4
100362-00	3/8" Flat Washer, SST	4

SM = Surface Mount
DB = Direct Bury

Specifications

Deck Ramp Ext.: Flange formed from 11 GA (.120") sheet steel conforming to ASTM A1011. Standing surface is perforated with 5/16" diameter holes. Deck face has (4) slotted holes for face mounting components. The finished size measures 2 5/8" x 15 3/4" x 4'-0". Finish: TenderTuff, color specified.

Support (DB): Weldment comprised of 1.660" O.D. RS20 (.085"-.095" wall) galvanized steel tubing and 1 3/4" x 1 3/4" x 1/8" HR angle. Finish: ProShield, color specified.

Curb: Permalene, color specified.

Clamps: Cast aluminum. Finish: ProShield, color specified.

Fasteners: Primary fasteners shall be socketed and pinned tamperproof in design, stainless steel (SST) per ASTM F 879 unless otherwise indicated (see specific product installation/specifications).

Installation Time: Approx. 1 3/4 man hours (DB)
Approx. 1 1/2 man hours (SM)

Weight: 50 lbs. (DB)
44 lbs. (SM) 12" Deck
45 lbs. (SM) 16" Deck

Concrete: 2.62 cu. ft. (DB)

Fall Height: Deck Height

Installation Instructions

1) **(Direct Bury)** Dig footings as shown. Refer to the Plan View/Footing Layout.

2) Fasten hanger clamp assemblies to posts. Refer to Site Plan for deck height.

3) Lift deck ramp extension into position, lining up studs underneath deck ramp extension with deck hanger clamps as shown. Attach with 3/8" flat washers and 3/8" hex patch nuts.

4) Attach curbs to deck ramp extension, using 3/8" x 7/8" BHCS w/pin with 3/8" SAE flat washers and 3/8" flange nuts w/pin.

5) Attach deck mount spacer and support to deck ramp extension, using 3/8" x 1 3/8" BHCS w/pin with 3/8" SAE flat washers and 3/8" standard hex nuts with 3/8" SAE flat washers. Refer to Detail.

6) Level deck and plumb posts. Install 1/4" x 5/8" drive rivets in all 5" half clamps. Refer to the Typical Offset Hanger Clamp Spec Sheet.

7) **(Direct Bury)** Pour concrete footings per the Direct Bury Detail. Allow concrete footings to cure a minimum of 72 hours before users are allowed to play on the structure.

   (Surface Mount) With support plumb, drill 3" deep holes into concrete slab through holes in support plates, use a 3/8" masonry bit and 3/8" hammer drill. Tap 3/8" x 2 3/4" expansion anchors into holes and secure using 3/8" standard hex nuts with 3/8" flat washers. Refer to the Surface Mount Detail.

8) Install protective surfacing before users are allowed to play on the structure.

FOR REFERENCE ONLY

Eco #0101346 Document 24598500 replaces 18278300. Longer screws added to hardware package.

landscape structures®

ISO 14001 CERTIFIED

ISO 9001 Certified

SAFETY NOTE

Choose a protective surfacing ma
has a Critical Height Value of at least the height of the Highest Accessible Part/Fall Height of the adjacent equipment. (Ref. *ASTM F1487*.)

DETAIL
ARCH ATTACHMENT

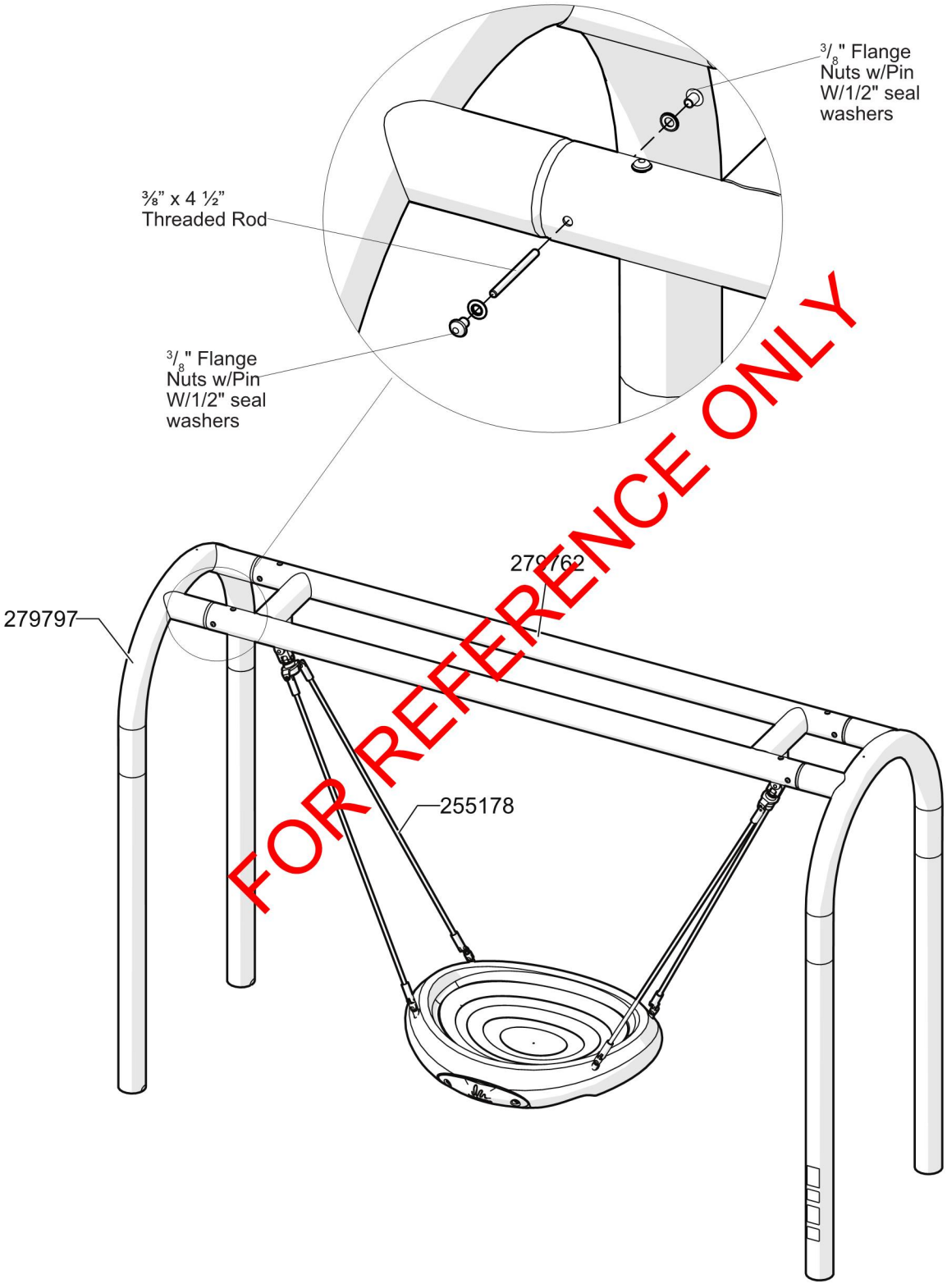

FOR REFERENCE ONLY

Custom 5” Steel Arch Oodle Swing

601 7TH STREET SOUTH, DELANO, MINNESOTA 55328-8605 888-574-4678 LSI Install Help 888-438-6574 LSI Direct 763-972-5200 Int. FAX (763) 972-318

© 2021 by Landscape Structures. All rights reserved.

landscape structures®

ISO 14001 CERTIFIED

ISO 9001 Certified

SAFETY NOTE

Choose a protective surfacing ma
has a Critical Height Value of at least the height of the Highest Accessible Part/Fall Height of the adjacent equipment. (Ref. *ASTM F1487*.)

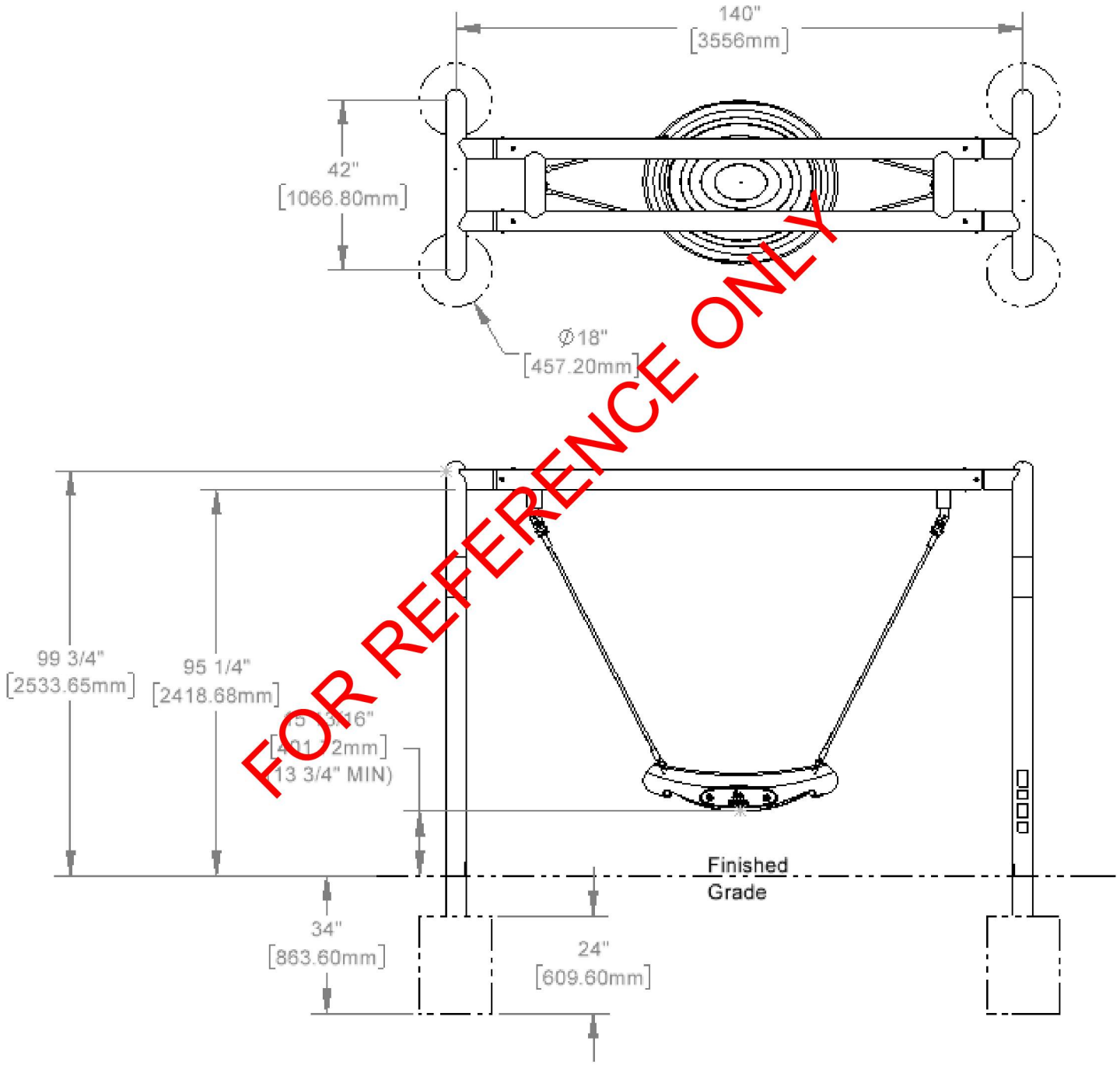

FOR REFERENCE ONLY

Custom 5” Steel Arch Oodle Swing

601 7TH STREET SOUTH, DELANO, MINNESOTA 55328-8605 888-574-4678 LSI Install Help 888-438-6574 LSI Direct 763-972-5200 Int. FAX (763) 972-318

© 2021 by Landscape Structures. All rights reserved.

landscape structures®

ISO 14001 CERTIFIED

ISO 9001 Certified

SAFETY NOTE

Choose a protective surfacing ma
has a Critical Height Value of at least the height of the Highest Accessible Part/Fall Height of the adjacent equipment. (Ref. *ASTM F1487.*)

DETAIL
CABLE ATTACHMENT

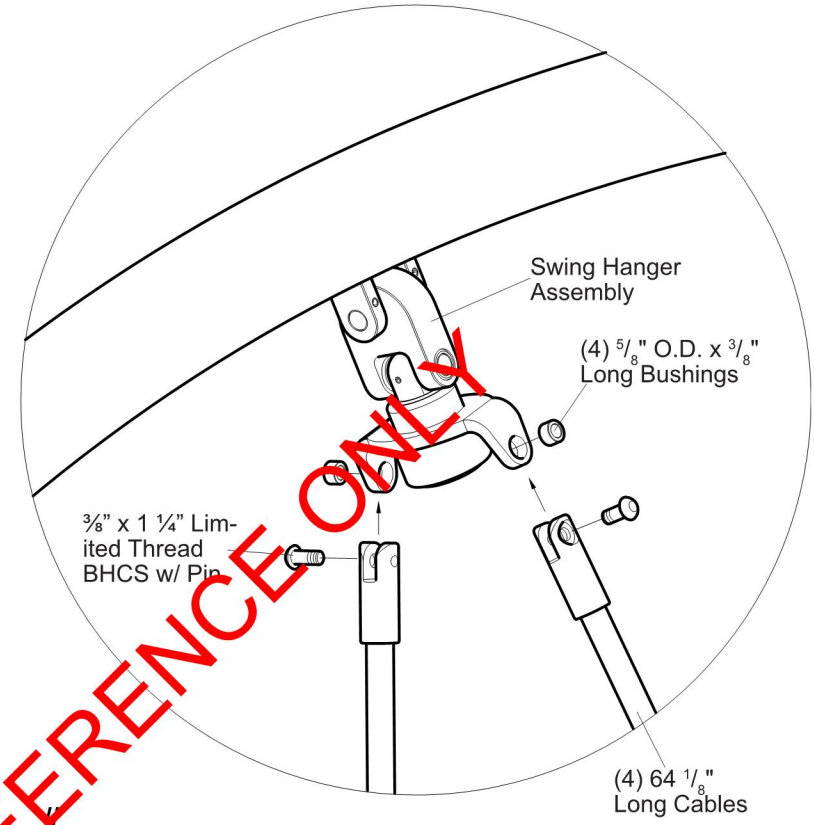

FOR REFERENCE ONLY

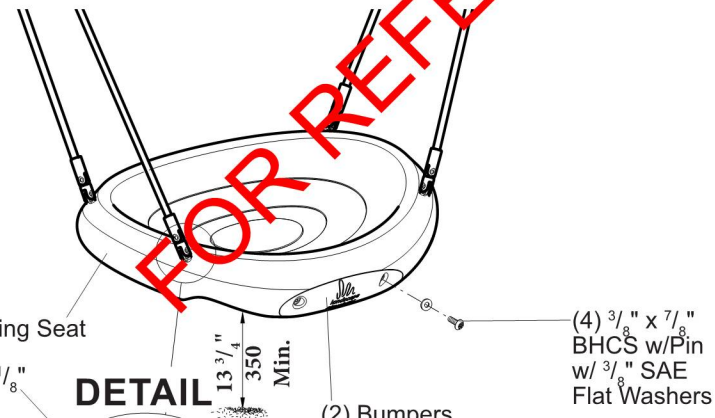

DETAIL

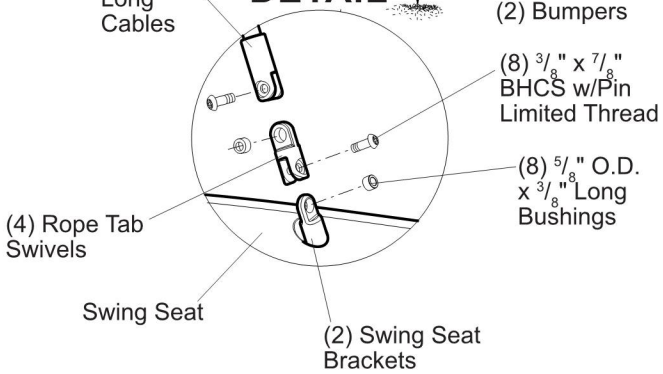

Custom 5” Steel Arch Oodle Swing

601 7TH STREET SOUTH, DELANO, MINNESOTA 55328-8605 888-574-4678 LSI Install Help 888-438-6574 LSI Direct 763-972-5200 Int. FAX (763) 972-318

© 2021 by Landscape Structures. All rights reserved.

landscape structures®

ISO 14001 CERTIFIED

ISO 9001 Certified

SAFETY NOTE

Choose a protective surfacing ma
has a Critical Height Value of at least the height of the Highest Accessible Part/Fall Height of the adjacent equipment. (Ref. *ASTM F1487*.)

DETAIL
SWING SEAT ATTACHMENT

Bottom View

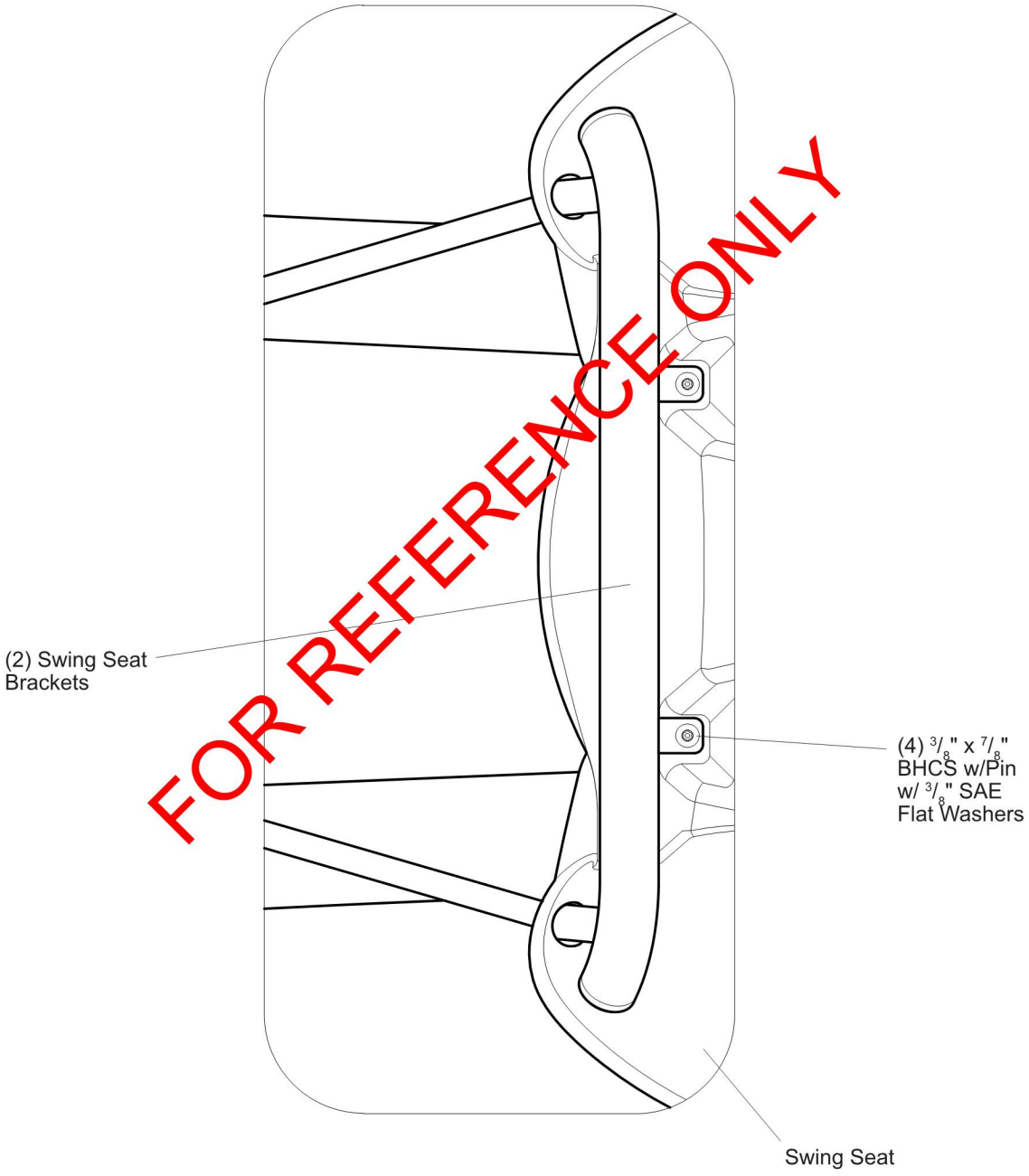

FOR REFERENCE ONLY

Custom 5” Steel Arch Oodle Swing

601 7TH STREET SOUTH, DELANO, MINNESOTA 55328-8605 888-574-4678 LSI Install Help 888-438-6574 LSI Direct 763-972-5200 Int. FAX (763) 972-318

© 2021 by Landscape Structures. All rights reserved.

landscape structures®

ISO 14001 CERTIFIED

ISO 9001 Certified

SAFETY NOTE

Choose a protective surfacing ma
has a Critical Height Value of at least the height of the Highest Accessible Part/Fall Height of the adjacent equipment. (Ref. *ASTM F1487*.)

Parts List

PART NUMBER	DESCRIPTION	QTY.
288309	CUST 5i STL ARCH OODLE SWING INST	1
279797	CUST 2 SLEEVE CONN 112-3/4i STL ARCH PNT	2
279762	CUST 5i ARCH OODLE SWING BEAM ASY	1
255178	CABLE 64 1/8i LG	4
255160	Large Rope Swivel Tab	4
223098	Master Seal Washer 1/2i ID x 1i OD	16
193982	OODLE SWING SEAT	1
189148	SPRT CROSS ARM OODLE SWG	2
182213	LABEL HOT SURFACE WARNING	1
182212	LABEL ENTANGLEMENT WARNING	1
172045	OODLE SWING BUMPER	2
156847	LABEL WELCOME 5-12 YRS	1
148081	THD ROD 3/8X4 1/2 SST	8
127179	BUSH 5/8OD X 3/8 LG SST	12
115176	LABEL SQ WARNING ASTM	1
100365	WASHER FLAT SAE 3/8i SST	8
100353	FLG NUT 6LP 3/8-16 SST	16
100292	BHCS 6LP LTHD 3/8X1 1/4i SST	12
100196	BHCS 6LP 3/8x7/8i SST	8

FOR REFERENCE ONLY

Installation Instructions

1) Assemble structure following steps and details shown. Use 2D layout as a reference.

   Direct Bury - With structure square, plumb and level, pour concrete footings. Allow concrete to cure a minimum of 72 hours before users are allowed to play on the structure.

2) Install protective surfacing before users are allowed to play on the structure.

© 2021 by Landscape Structures. All rights reserved.

landscape structures®

ISO 14001 CERTIFIED

ISO 9001 Certified

SAFETY N

Choose a protective surf[illegible] has a Critical Height Value of at least the height of the Highest Accessible Part/Fall Height of the adjacent equipment. (Ref. *ASTM F1487.*)

17745700

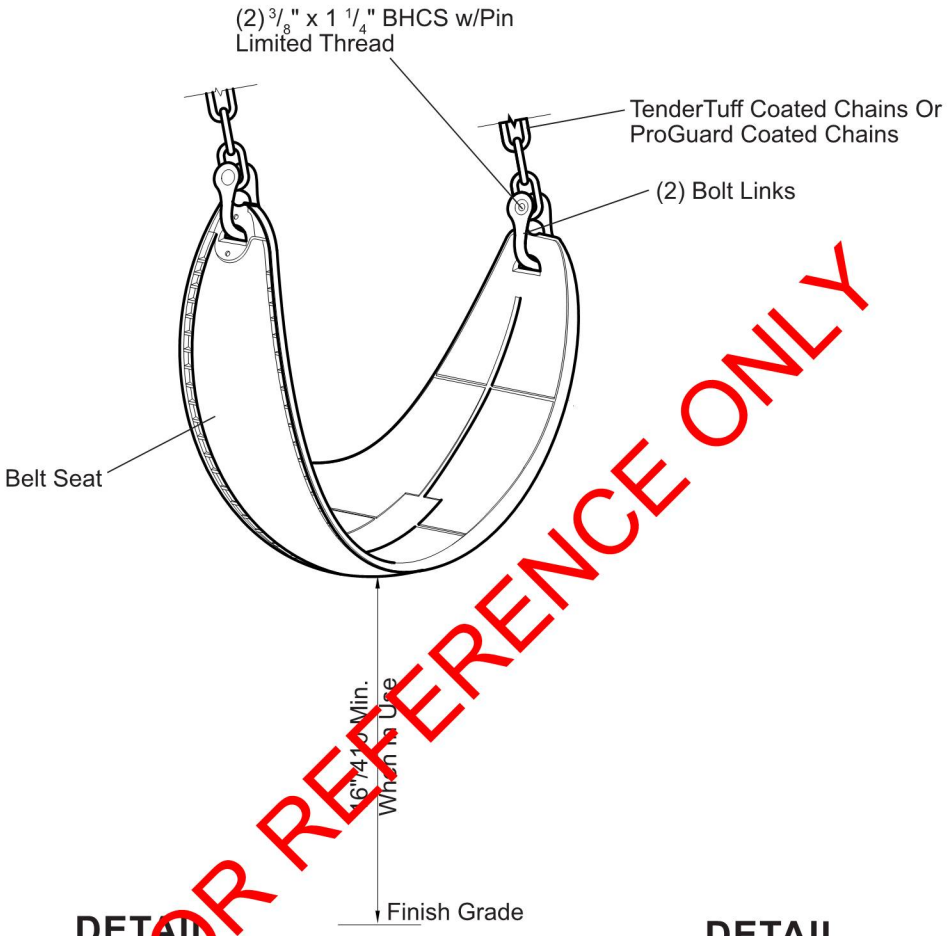

FOR REFERENCE ONLY

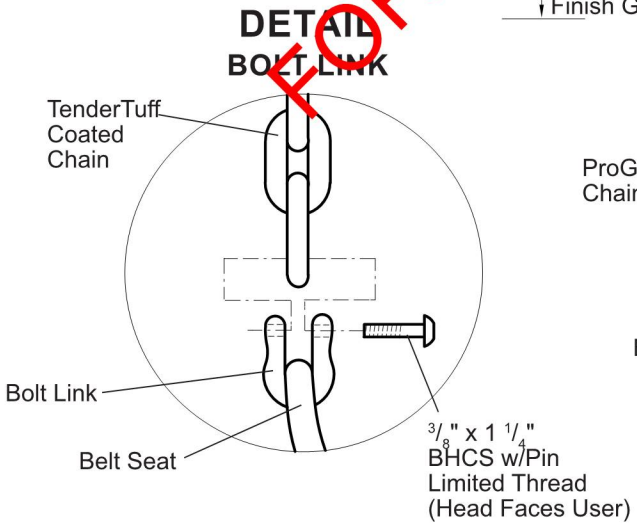

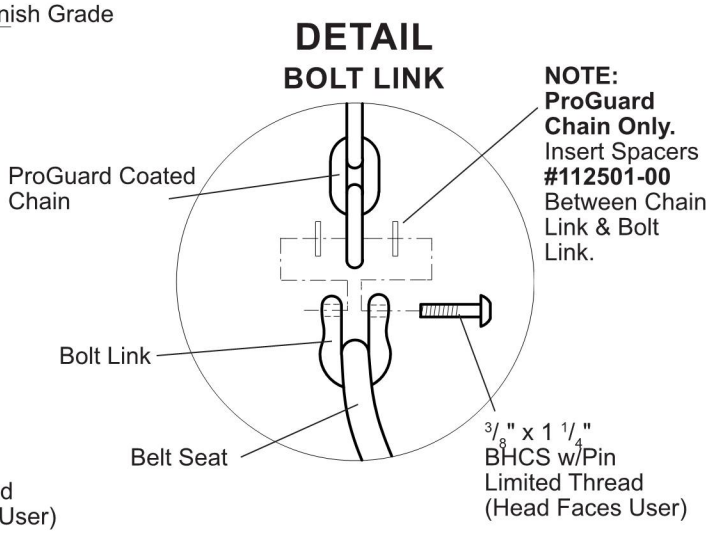

Swings

174018 Belt Seat

Sheet

©2015 by Landscape Structures. All rights reserved.

Document #21659100

Parts List

Part #	Description	Qty.
	7 Ft. High Beam	
128842	Belt Swing Seat, Black	1
178679	57 7/16" Chain, TenderTuff, Specify Color	2
175251	57 7/16" Chain, ProGuard	2
132672	**Bolt Link w/Bolt & Spacers**	1
100292	3/8" x 1 1/4" BHCS w/Pin Ltd. Thread, SST	2
138915	Bolt Link, SST	2
112501	Chain Spacer	4
132635	**Bolt Link w/Bolt Hardware Package**	1
100292-00	3/8" x 1 1/4" BHCS w/Pin Ltd. Thread, SST	2
138915	Bolt Link, SST	2
	8 Ft. High Beam	
128842	Belt Swing Seat, Black	1
152050	67 7/8" Chain, TenderTuff, Specify Color	2
174404	67 7/8" Chain, ProGuard	2
132672	**Bolt Link w/Bolt & Spacers**	1
100292	3/8" x 1 1/4" BHCS w/Pin Ltd. Thread, SST	2
138915	Bolt Link, SST	2
112501	Chain Spacer	4
132635	**Bolt Link w/Bolt Hardware Package**	1
100292	3/8" x 1 1/4" BHCS w/Pin Ltd. Thread, SST	2
138915	Bolt Link, SST	2
	10 Ft. High Beam	
128842	Belt Swing Seat, Black	1
152052	90 11/16" Chain, TenderTuff, Specify Color	2
174884	90 11/16" Chain, ProGuard	2
132672	**Bolt Link w/Bolt & Spacers**	1
100292	3/8" x 1 1/4" BHCS w/Pin Ltd. Thread, SST	2
138915	Bolt Link, SST	2
112501	Chain Spacer	4
132635	**Bolt Link w/Bolt Hardware Package**	1
100292	3/8" x 1 1/4" BHCS w/Pin Ltd. Thread, SST	2
138915	Bolt Link, SST	2

Specifications

Chain Spacer: Made from white nylon measuring .080" x .785" O.D.

Chain/ProGuard: Steel 3/16" straight link chain, 800 lb. working load limit. Finish: ProGuard.

Chain/Coated: Steel 3/16" straight link chain, 800 lb. working load limit. Finish: TenderTuff®, color specified.

Belt Seats: Molded from U.V. stabilized black EPDM rubber encapsulating a weldment comprised of a 22 GA (.029") spring stainless steel sheet, and (4) .105" thick stainless steel washers. The belt seat elliptical shape measures 7" wide x 26" long x .700" thick.

Bolt Link: Stainless Steel.

Fasteners: Primary fasteners shall be socketed and pinned tamperproof in design, stainless steel (SST) per ASTM F 879 unless otherwise indicated (see specific product installation/specifications).

Installation Time: 1/4 man hour per seat

Weight: 8 lbs. (7 Ft. Beam w/ProGuard Chains)
9 lbs. (7 Ft. Beam w/TenderTuff Chains
8 lbs. (8 Ft. Beam w/ProGuard Chains)
9 lbs. (8 Ft. Beam w/TenderTuff Chains)
10 lbs. (10 Ft. Beam w/ProGuard Chains)
11 lbs. (10 Ft. Beam w/TenderTuff Chains)

Installation

Swing Hangers With Double Clevis

1) Attach chains to double clevis using 3/8" x 1 1/4" BHCS w/pin limited thread, as shown.
2) Attach chains to belt seat using bolt links with 3/8" x 1 1/4" BHCS w/ pin limited thread. Be sure bolt heads face user. **NOTE:** *Use chain spacers as shown when installing ProGuard chains.*
3) Install protective surfacing before users are allowed to play on the structure.

Anti-wrap Swing Hangers

1) Attach chains to aluminum clevis using 3/8" x 7/8" BHCS w/pin limited thread, as shown.
2) Attach chains to belt seat using bolt links with 3/8" x 1 1/4" BHCS w/ pin limited thread. Be sure bolt heads face user. **NOTE:** *Use chain spacers as shown when installing ProGuard chains.*
3) Install protective surfacing before users are allowed to play on the structure.

FOR REFERENCE ONLY

landscape structures®

ISO 14001 CERTIFIED

ISO 9001 Certified

SAFETY N

Choose a protective surf… has a Critical Height Value of at least the height of the Highest Accessible Part/Fall Height of the adjacent equipment. (Ref. *ASTM F1487*.)

225544

ELEVATION

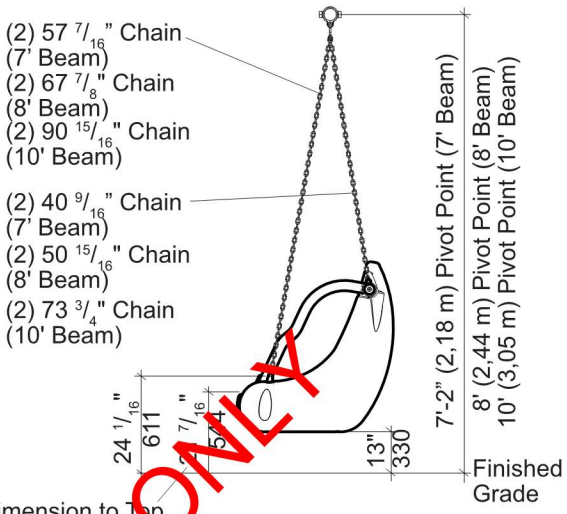

DETAIL

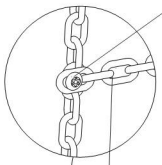

(ProGuard Chain)
(2) 3/8" x 7/8" BHCS w/Pin & 3/8" Hex Jam Nuts

(TenderTuff Chain)
(2) 3/8" x 1 1/8" BHCS w/Pin & 3/8" Standard Hex Nuts w/ 3/8" SAE Flat Washers

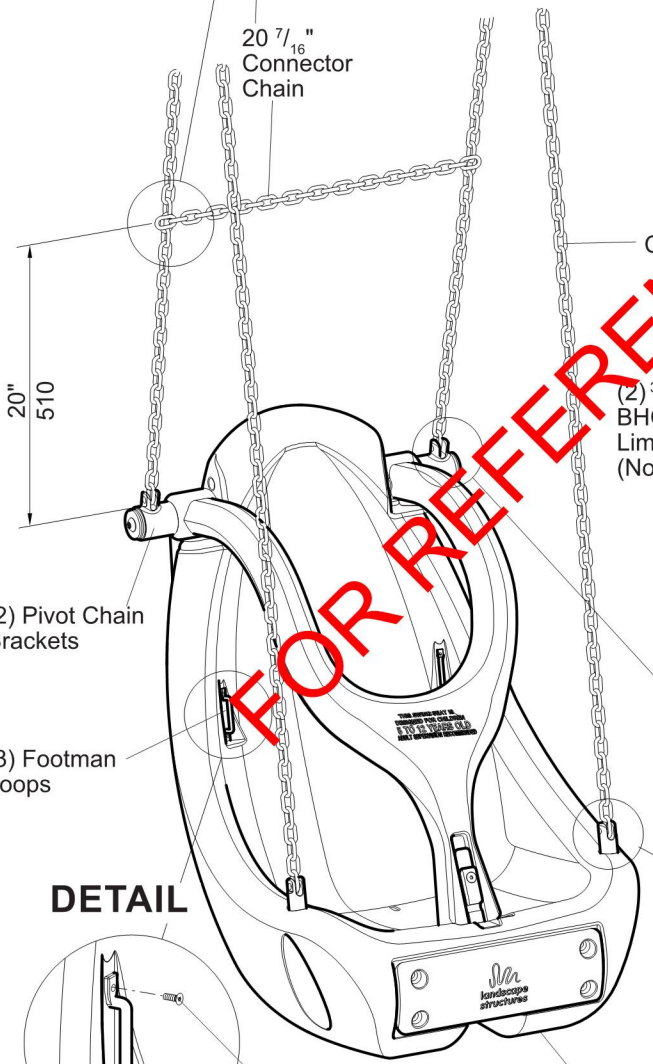

DETAIL
HANGER ASSEMBLY

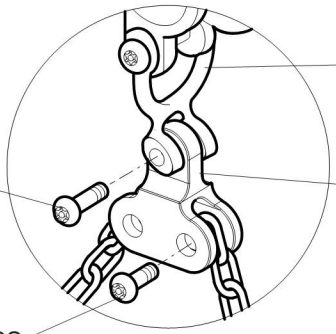

DETAIL
BRACKET

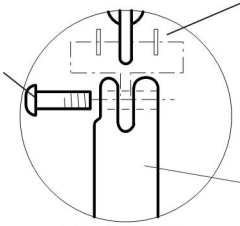

NOTE: For ProGuard chain, insert (8) nylon spacers between chain links & brackets

DETAIL
BRACKET

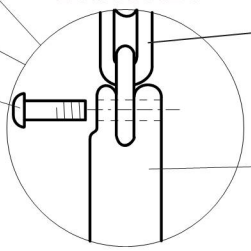

FOR REFERENCE ONLY

Swings

177351 Molded Bucket Seat, w/Harness

©2019 by Landscape Structures. All rights reserved.

Document #25974300

Swings 177351 Molded Bucket Seat, w/Harne

Parts List

Part#	Description	Qty.
259433	Molded Bucket Seat Assembly, Specify Color	1
	7 Ft. High Beam - ProGuard Finished Chains	
175251	57 7/16" Long, (Front)	2
193869	40 9/16" Long, (Back)	2
175653	20 7/16" Long, (Connector)	1
	8 Ft. High Beam - ProGuard Finished Chains	
174404	67 7/8" Long, (Front)	2
175619	50 15/16" Long, (Back)	2
175653	20 7/16" Long, (Connector)	1
	10 Ft. High Beam - ProGuard Finished Chains	
174884	90 11/16" Long, (Front)	2
175623	73 3/4" Long, (Back)	2
175653	20 7/16" Long, (Connector)	1
	7 Ft. High Beam - TenderTuff Chains	
178679	57 7/16" Long, (Front), Specify Color	2
179286	40 9/16" Long, (Back), Specify Color	2
174571	20 7/16" Long, (Connector), Specify Color	1
	8 Ft. High Beam - TenderTuff Chains	
152050	67 7/8" Long, (Front), Specify Color	2
174572	50 15/16" Long, (Back), Specify Color	2
174571	20 7/16" Long, (Connector), Specify Color	1
	10 Ft. High Beam -TenderTuff Chains	
152052	90 11/16" Long, (Front), Specify Color	2
175621	73 3/4" Long, (Back), Specify Color	2
174571	20 7/16" Long, (Connector), Specify Color	1
225662	**Molded Seat w/Yoke Hardware Package**	
100196	3/8" x 7/8" BHCS w/Pin, SST	2
100198	3/8" x 1 1/8" BHCS w/Pin, SST	2
100290	3/8" x 7/8" BHCS w/Pin Limited Thread, SST	8
100327	3/8" Standard Hex Nut, SST	2
100365	3/8" SAE Flat Washer, SST	6
106035	Seat Mounting Bracket	2
112501	Nylon Spacer	8
128296	3/8" Hex Jam Nut, SST	2
207709	Footman Loop, SST	3
160307	Double Pivot Block Assy.	2
162462	#10-24 x 1/2" Flat Head Screw, SST	6

Specifications

Bucket Seat Assy.: **(Bucket Seat & Yoke)** Rotationally molded from U.V. stabilized linear low density polyethylene, color specified. **(Pipebolt)** Made from 1.125" O.D. 6005-T5 threaded annodized aluminum tube. **(Bearings)** UHMW PE lubricated. **(Brackets)** Made from 356-T6 aluminum.

Chain/ProGuard: Steel 3/16" straight link chain, 800 lb. working load limit. Finish: ProGuard.

Chain/Coated: Steel 3/16" straight link chain, 800 lb. working load limit. Finish: TenderTuff, color specified.

Seat Mounting Bracket: Cast from 535 aluminum magnesium.

Bumper: Molded from U.V. stabilized black EPDM rubber encapsulating 11 GA (.120") HRPO steel sheet.

Dbl. Pivot Block: Fabricated from 6061-T6 Aluminum with bronze oil impregnated bearing.

Fasteners: Primary fasteners shall be socketed and pinned tamperproof in design, stainless steel (SST) per ASTM F 879 unless otherwise indicated (see specific product installation/specifications).

Installation Time: Approx. 1 man hour

Weight: 50 lbs. (7 Ft. Beam w/ProGuard Chains)
53 lbs. (7 Ft. Beam w/TenderTuff Chains)
48 lbs. (8 Ft. Beam w/ProGuard Chains)
51 lbs. (8 Ft. Beam w/TenderTuff Chains)
51 lbs. (10 Ft. Beam w/ProGuard Chains)
55 lbs. (10 Ft. Beam w/TenderTuff Chains)

FOR REFERENCE ONLY

Installation Instructions

1) Insert seat mounting brackets into molded-in holes in front of bucket seat and attach ends of chain, using 3/8" x 7/8" BHCS w/pin limited thread. See Bracket Detail. **NOTE:** *For ProGuard coated chain, insert (4) nylon spacers between chain links and brackets.*

2) Attach ends of chain to pivot chain brackets, using 3/8" x 7/8" BHCS w/pin limited thread. See Bracket Detail. **NOTE:** *For ProGuard coated chain, insert (4) nylon spacers between chain links and brackets.*

3) Attach chains to double pivot blocks, using 3/8" x 7/8" BHCS w/pin limited thread.

4) **(Swing Hangers with Double Clevis)** Attach chains to swing hanger double clevis, using 3/8" x 1 1/4" BHCS w/pin limited thread.

   (Anti-wrap Swing Hangers) Attach chains to anti-wrap swing hanger clevis, using 3/8" x 7/8" BHCS w/pin limited thread.

5) **(ProGuard Chain)** Attach connector chain to back swing chains at dimension shown, using 3/8" x 7/8" BHCS w/pin & 3/8" jam nuts. Refer to Detail.

   (TenderTuff Chain) Attach connector chain to back swing chains at dimension shown, using 3/8" x 1 1/8" BHCS w/pin & 3/8" standard hex nuts with 3/8" SAE Flat Washers. Refer to Detail.

6) Attach footman loops, using #10-24 x 1/2" flat head screws, as shown. Footman loops are used for seat belts (not included).

7) Attach bumper to front of swing seat, using 3/8" x 7/8" BHCS w/pin with 3/8" SAE Flat Washers.

8) Install protective surfacing before users are allowed to play on the structure.

Specifications are subject to change without notice.

ECO 0101646. Document 25974300 replaces 22554400. Added age appropriate message to swing yoke.

landscape structures®

ISO 14001 CERTIFIED

ISO 9001 Certified

SAFETY N

Choose a protective surf… has a Critical Height Value of at least the height of the Highest Accessible Part/Fall Height of the adjacent equipment. (Ref. ASTM F1487.)

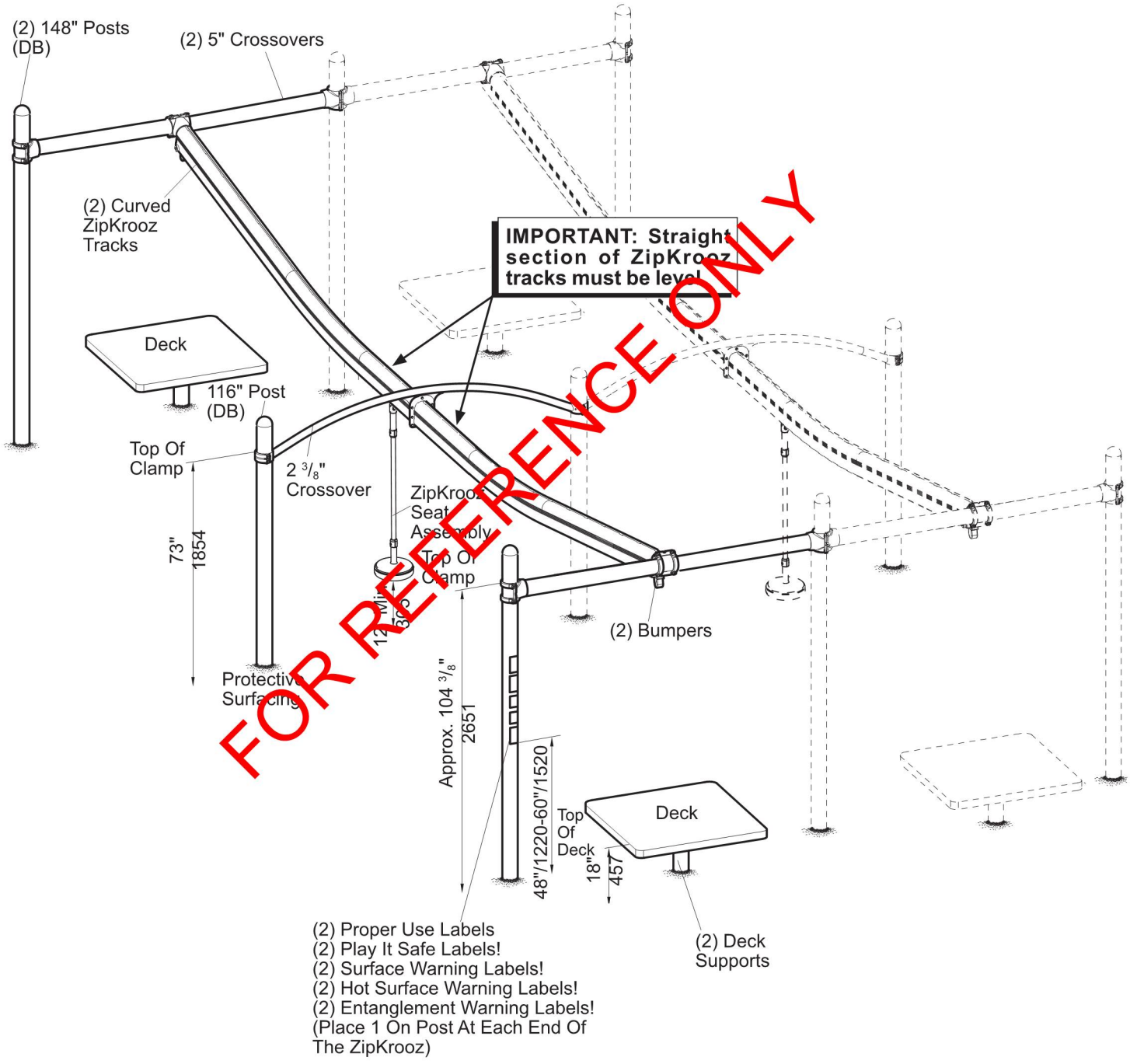

FOR REFERENCE ONLY

© 2022 by Landscape Structures. All rights reserved.

landscape structures®

ISO 14001 CERTIFIED

ISO 9001 Certified

SAFETY NOTE

Choose a protective surfacing material that has a Critical Height Value of at least the height of the Highest Accessible Part/Fall Height of the adjacent equipment. (Ref. ASTM F1487.)

PLAN VIEW/FOOTING LAYOUT

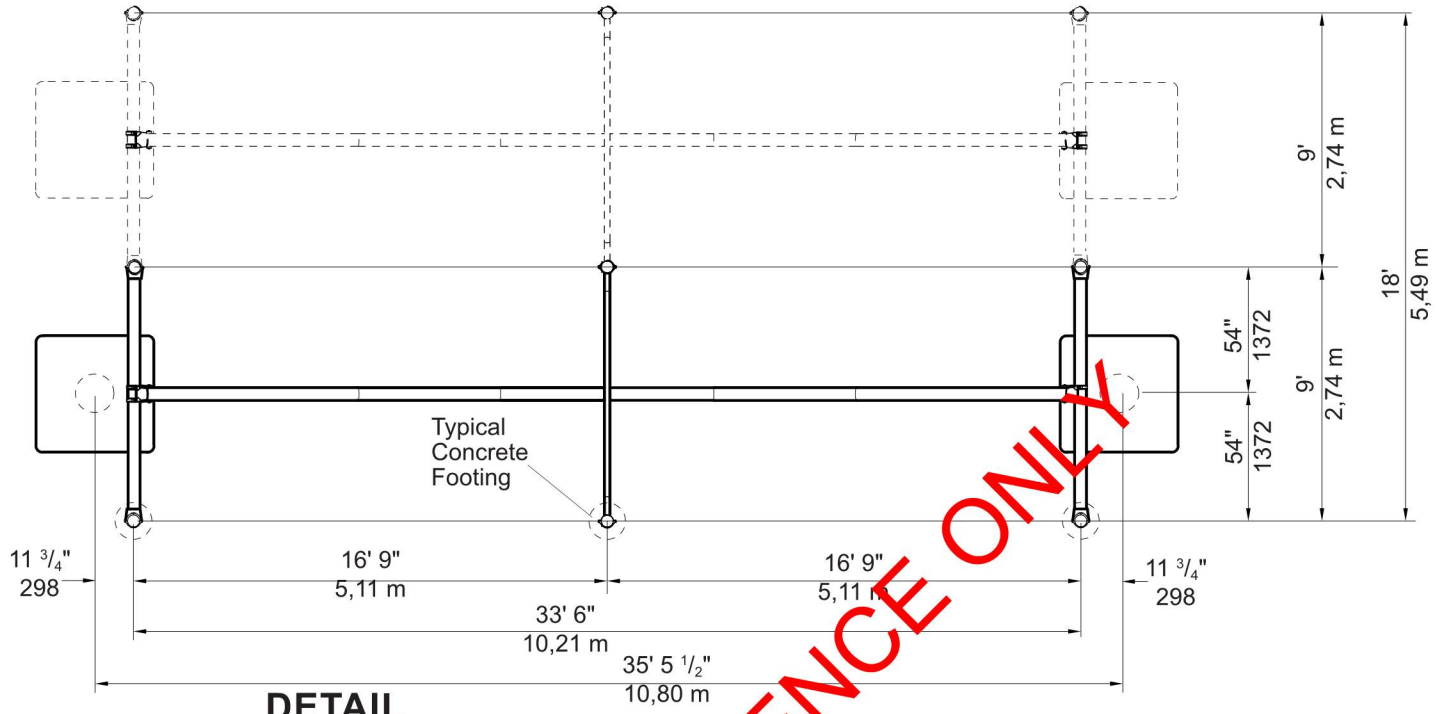

FOR REFERENCE ONLY

DETAIL
DIRECT BURY

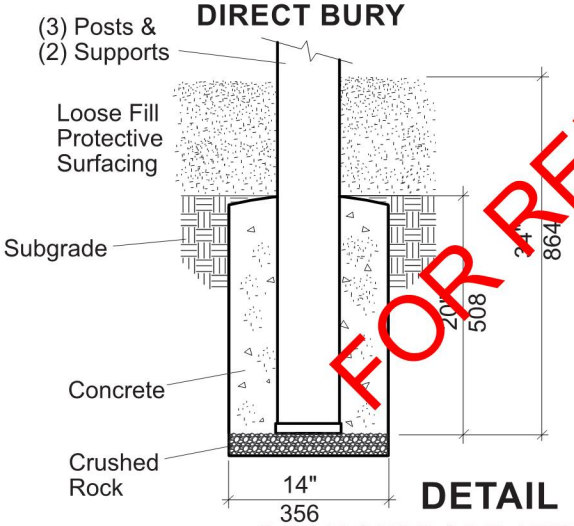

DETAIL
SURFACE MOUNT

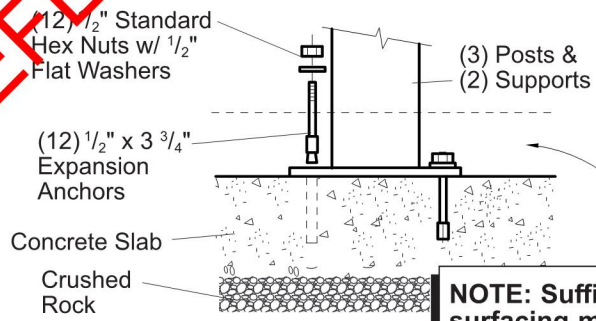

NOTE: Sufficient protective surfacing must cover hardware to satisfy fall height requirements.

DETAIL
DECK SUPPORT ATTACHMENT

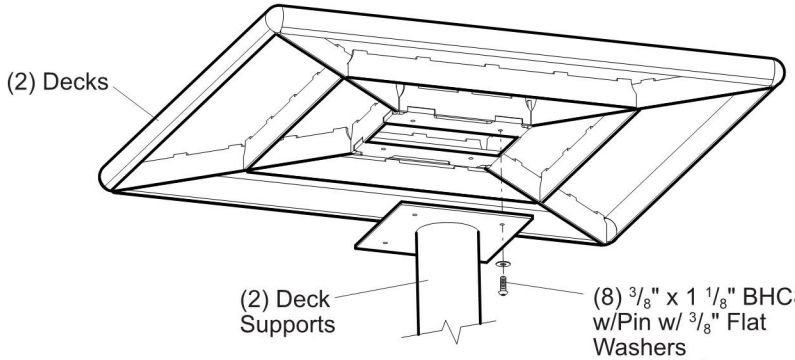

DETAIL
DECK SURFACE MOUNT

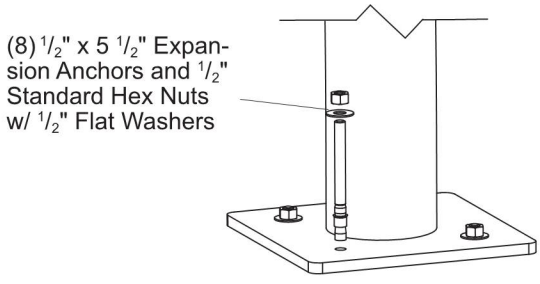

Kids In Motion 195507 ZipKrooz®, Additional Bay, 34 Ft.

© 2022 by Landscape Structures. All rights reserved.

landscape structures®

ISO 14001 CERTIFIED

ISO 9001 Certified

SAFETY N
Choose a protective surf
has a Critical Height Value of at least the height of the Highest Accessible Part/Fall Height of the adjacent equipment. (Ref. ASTM F1487.)

DETAIL
TRACK ATTACHMENT

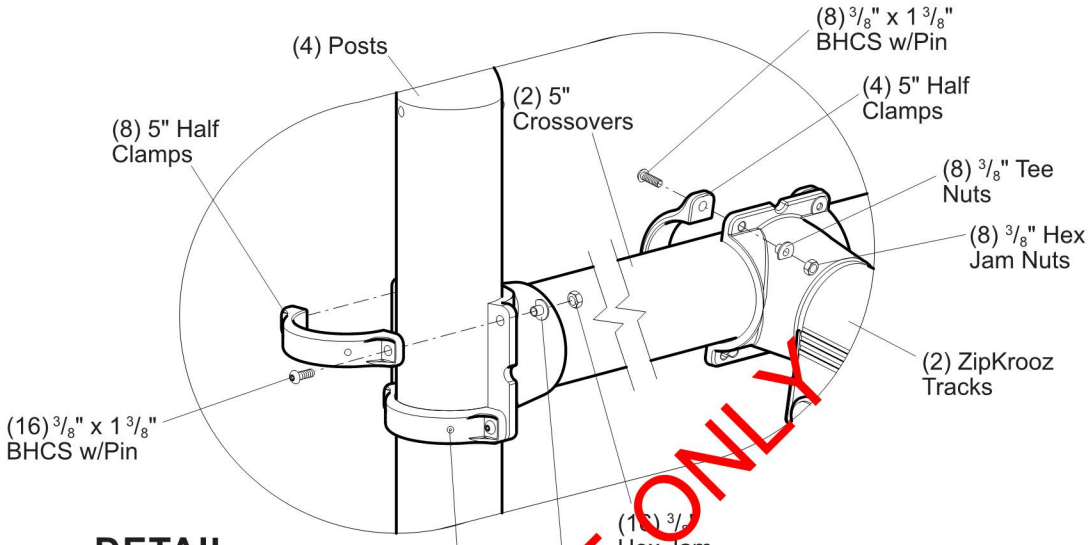

DETAIL
BUMPER ASSEMBLY

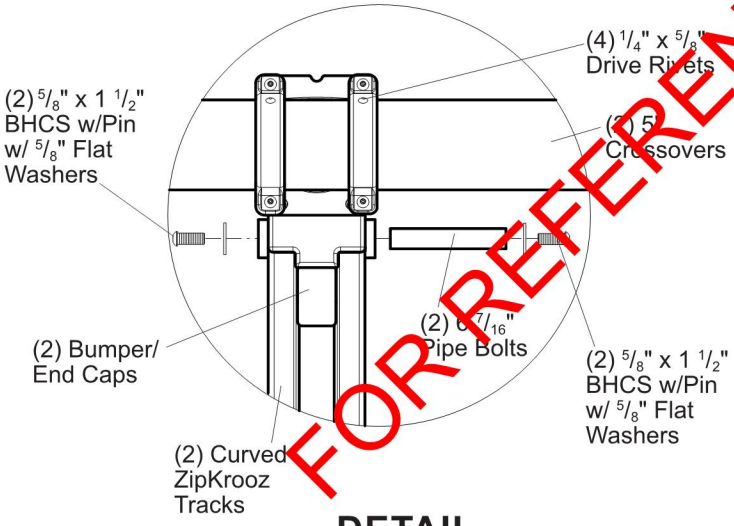

DETAIL
CROSSOVER ATTACHMENT

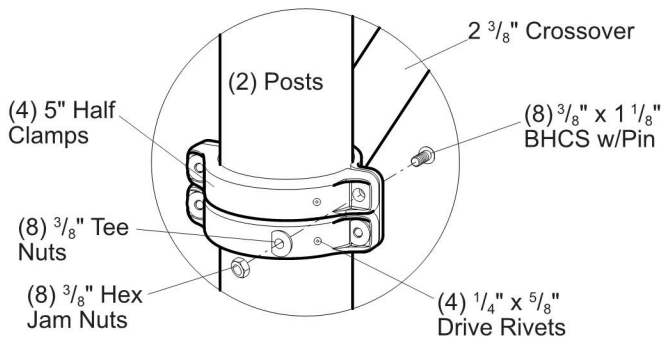

FOR REFERENCE ONLY

DETAIL
BACK TO BACK 2 3/8" CROSSOVERS

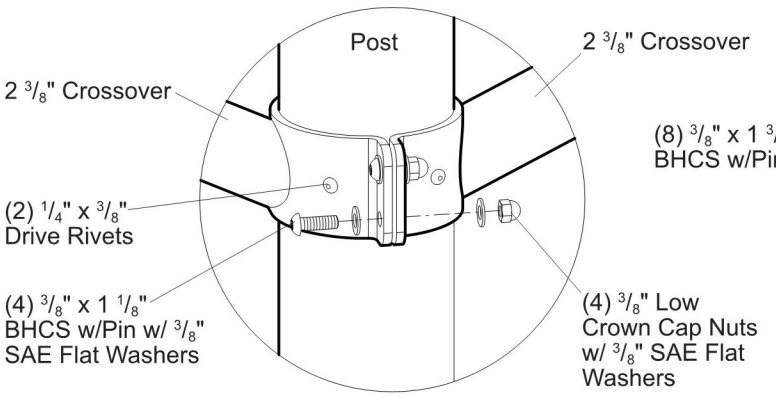

DETAIL
BACK TO BACK TEE CLAMPS

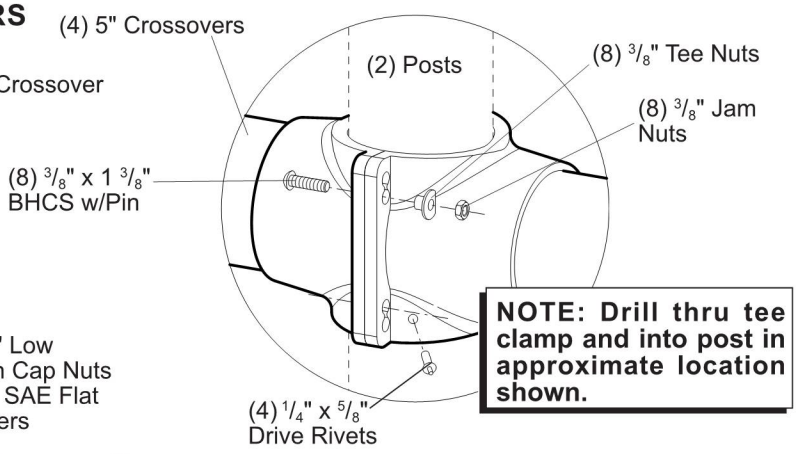

NOTE: Drill thru tee clamp and into post in approximate location shown.

Kids In Motion **195507 ZipKrooz®, Additional Bay, 34 Ft.**

601 7TH STREET SOUTH, DELANO, MINNESOTA 55328-8605 888-574-4678 LSI Install Help 888-438-6574 LSI Direct 763-972-5200 Int. FAX (763)

© 2022 by Landscape Structures. All rights reserved.

landscape structures®

ISO 14001 CERTIFIED

ISO 9001 Certified

SAFETY NOTE

Choose a protective surfacing material that has a Critical Height Value of at least the height of the Highest Accessible Part/Fall Height of the adjacent equipment. (Ref. ASTM F1487.)

DETAIL
TRACK ASSEMBLY

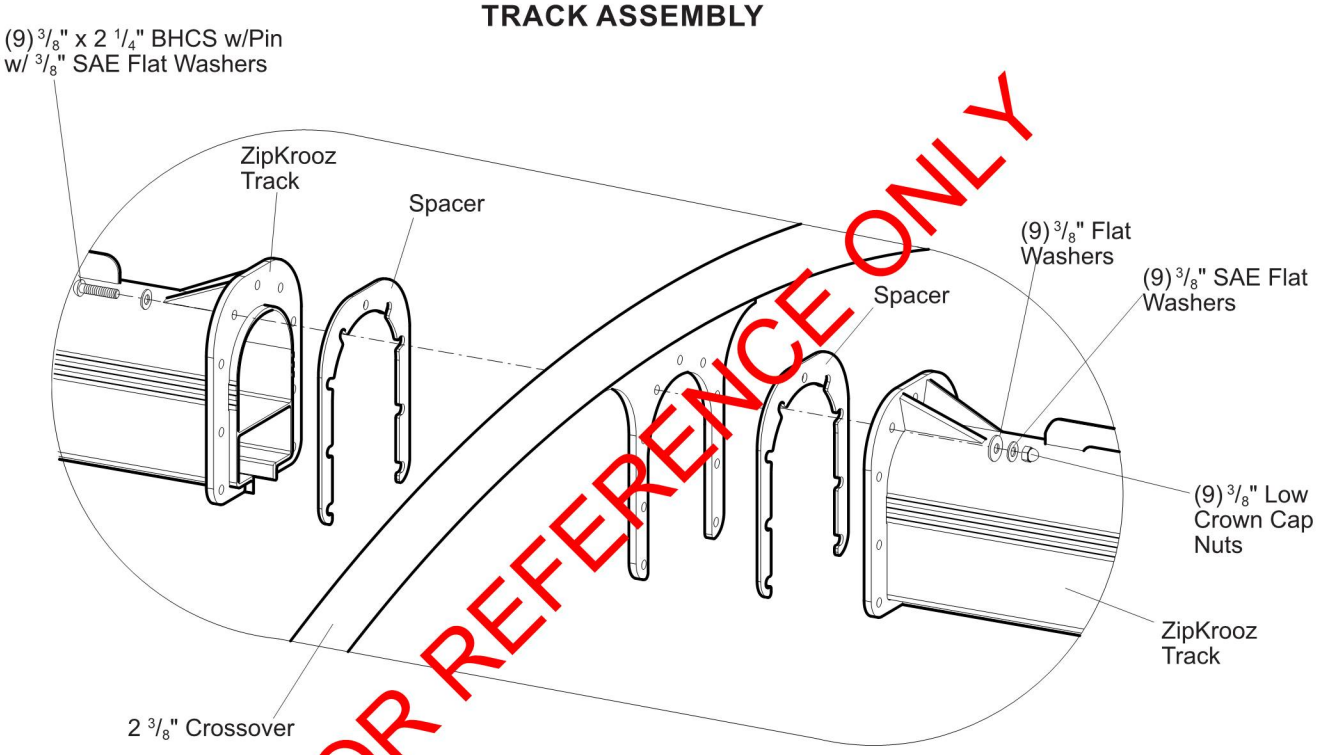

FOR REFERENCE ONLY

© 2022 by Landscape Structures. All rights reserved.

landscape structures®

ISO 14001 CERTIFIED

ISO 9001 Certified

SAFETY N

Choose a protective surf[illegible] has a Critical Height Va[illegible] height of the Highest Accessible Part/Fall Height of the adjacent equipment. (Ref. ASTM F1487.)

DETAIL
TROLLEY ASSEMBLY

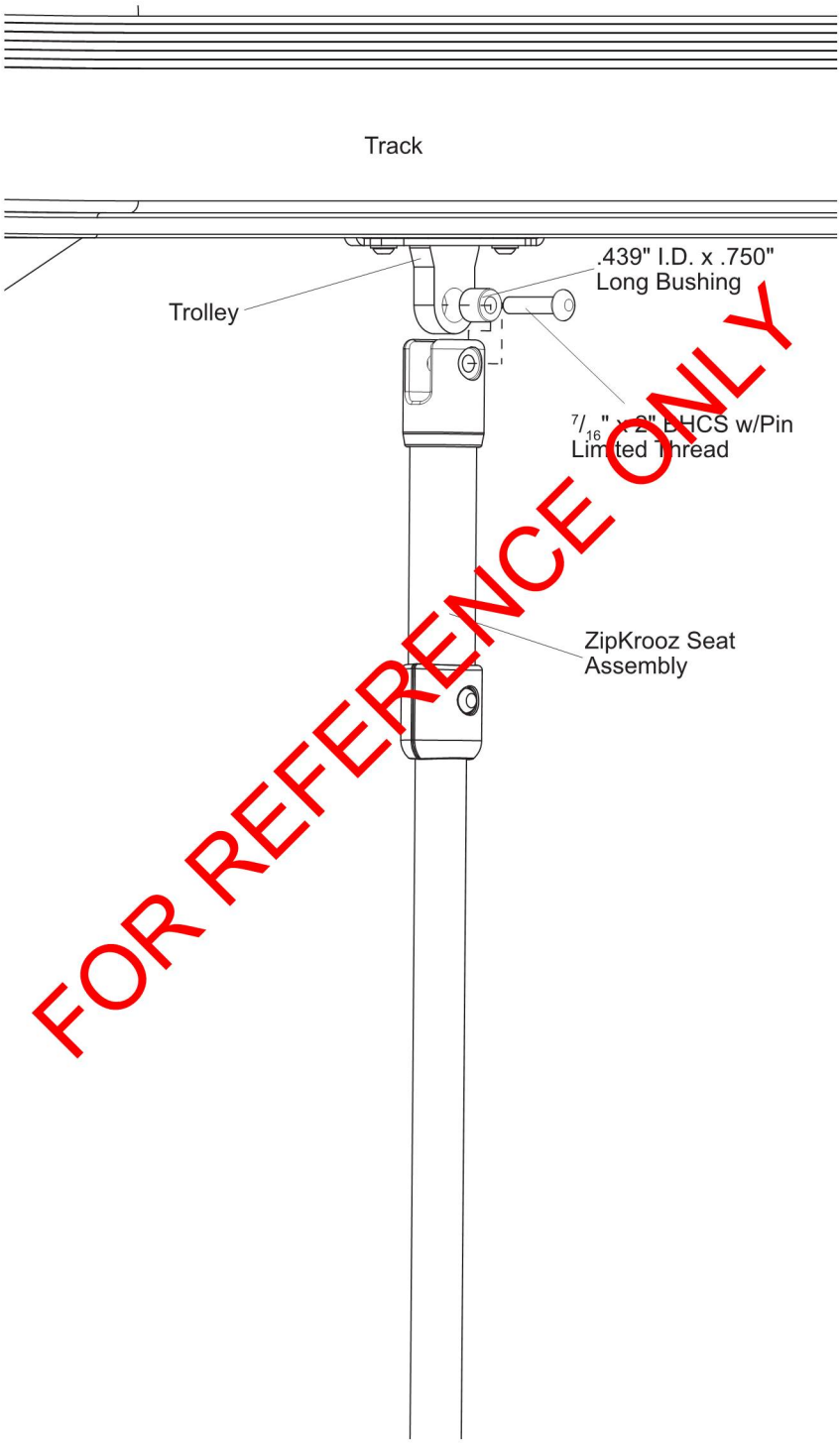

FOR REFERENCE ONLY

© 2022 by Landscape Structures. All rights reserved.

Parts List

Part#	Description	Qty.
100610	1/4" x 5/8" Drive Rivet, AL/SST	10
105327	5" Half Clamp, Specify Color	4
199896	Crossover Beam, Specify Color	2
107470	84" Steel Post w/Cap, SM, Specify Color	1
198216	116" Steel Post w/Cap, SM, Specify Color	2
107520	116" Steel Post w/Cap, DB, Specify Color	1
198214	148" Steel Post w/Cap, DB, Specify Color	2
107623	84" Aluminum Post w/Cap, SM, Specify Color	1
198217	116" Aluminum Post w/Cap, SM, Specify Color	2
107694	116" Aluminum Post w/Cap, DB, Specify Color	1
198215	148" Aluminum Post w/Cap, DB, Specify Color	2
142136	Bumper, Black	2
199792	Deck, Specify Color	2
265477	ZipKrooz Seat Assembly	1
205138	2 3/8" Crossover, Specify Color	1
205042	Curved ZipKrooz Track, Specify Color	2
296855	ZipKrooz Trolley Assembly, Black	1
199899	Deck Support 18" Deck, DB, Specify Color	2
199900	Deck Support 18" Deck, SM, Specify Color	2
205192	Spacer, Aluminum	2
199927	**Deck Support Hardware Package**	2
100198	3/8" x 1 1/8" BHCS w/Pin, SST	8
100362	3/8" Flat Washer, SST	8
206171	**ZipKrooz 34 Ft. Hardware Package**	1
100198	3/8" x 1 1/8" BHCS w/Pin, SST	8
113027	3/8" x 1 3/8" BHCS w/Pin, SST	24
100201	5/8" x 1 1/2" BHCS w/Pin, SST	4
100349	3/8" Low Crown Cap Nut, SST	9
100351	3/8" Tee Nut, SST	32
100365	3/8" SAE Flat Washer, SST	18
100362	3/8" Flat Washer, SST	9
100366	5/8" Flat Washer, SST	4
100199	3/8" x 2 1/4" BHCS w/Pin, SST	9
121105	6 7/16" Aluminum Pipe Bolt	2
197123	Proper Use Label.	2
115176	ASTM HD Surface Warning Label	2
156847	Play Safe Label, 5-12 YRS.	2
182212	Entanglement Warning Label	2
182213	Hot Surface Warning Label	2
128296	3/8" Hex Jam Nut, SST	32
305870	**HDW PKG ZIPKROOZ SEAT ASSY**	1
157704	7/16" x 2" BHCS w/Pin Limited Thread, SST	1
203702	.439" I.D. x .750" Long Bushing, SST	1
196735	**Back To Back Steel Clamp Hardware Package**	1
100198	3/8" x 1 1/8" BHCS w/Pin, SST	4
100349	3/8" Low Crown Cap Nut Nut, SST	4
100365	3/8" SAE Flat Washer, SST	8
100611	1/4" x 3/8" Drive Rivet, AL/SST	2
196733	**Back To Back Double Tee Clamp Hdw. Pkg.**	2
100351	3/8" Tee Nut, SST	8
100610	1/4" x 5/8" Drive Rivet, AL/SST	4
113027	3/8" x 1 3/8" BHCS w/Pin, SST	8
128296	3/8" Hex Jam Nut, SST	8
313069	**4-Hole (SM) Hardware Package**	2
100267	1/2" x 5 1/2" Expansion Anchor w/nut and washer	8
183388	**4-Hole (SM) Hardware Package**	3
100322	1/2" Standard Hex Nut, SST	12
100363	1/2" Flat Washer, SST	12
176046	1/2" x 3 3/4" Expansion Anchor	12

DB = Direct Bury
SM = Surface Mount

Specifications

Track: Extruded from 6005-T4 aluminum alloy. Finish: ProShield®, color specified.

Bumper: Urethane, black in color.

Spacer: .190"(4,82 mm) Thick aluminum sheet.e.

Deck Support: Weldment comprised of 5" (127 mm) O.D. x 7 GA. (.179") (4,54 mm) wall galvanized steel tube, and 1/2" (12,7 mm) HRPO steel plate. Finish: ProShield®, color specified.

Posts: See PlayBooster®(PB) General Specifications.

Deck: Flange formed from 12 GA (.105") (2,66 mm) sheet steel conforming to ASTM A1011, 1/4" (6,35 mm) HRPO flat steel and 3/8" (9,53 mm) HRPO flat steel. Standing surface is perforated with 5/16" (7,94 mm) diameter holes. The finished size measures 2 1/8" x 38 1/2" x 38 1/2" (53,98 mm x 977 mm x 977 mm). Finish: TenderTuff™, color specified.

Trolley Assy.: Steel body with urethane rollers. Completely assembled. Steel Body Finish: ProShield®, black in color.

ZipKrooz Crossover: Weldment comprised of 2.375" (60,33 mm) O.D. RS40 (.130"-.140") (3,30 mm-3,55 mm) wall galvanized steel tubing, 3/8" (9,52 mm) thick HRPO steel plate and 1/4" (6,35 mm) thick HRPO steel. Finish: ProShield®, color specified.

Crossover: Weldment comprised of tee clamps and a 5" (127 mm) O.D. extruded 6005-T5 aluminum alloy tube with a .125" (3,17 mm) wall Finish: ProShield, color specified.

ZipKrooz Seat Assy (Chain) Steel 1/4" (6,35 mm) straight link chain, 3,150 lbs. (1428,82 kilograms) working load limit. Finish: ProGuard. (Cover) High pressure Buna-N Rubber hose, black in color. (Connector) 303 Stainless Steel. (Sleeves) Silicone hose, black in color. (Swivels) 6061-T6 Aluminum. (Lower Connector) Aluminum with Proshield finish, black in color. (Clamps) ZA-MAK #7 alloy with ProShield finish, black in color. (Spacers) Oil Embedded Sintered Iron-Copper. (Pod) Rotationally molded from U.V. Stabilized, E.V.A. (Ethyl vinyl acetate) and high density polyethylene, blended to retain flexibility at below freezing temperatures, black in color.

Clamp: Cast aluminum. Finish: ProShield, color specified.

Fasteners: Primary fasteners shall be socketed and pinned tamperproof in design, stainless steel (SST) per ASTM F 879 unless otherwise indicated (see specific product installation/specifications).

Installation Time: **(DB)** Approx. 12 man hours
(SM) Approx. 11 man hours
Min. Area Req.: 50' 8" x 9' (15,45 m x 2,74 m)
Concrete: **(DB)** Approx. 8.91 cu. ft.
Weight: **(DB)** 1108 lbs. Steel
(DB) 791 lbs. Aluminum
(SM) 1000 lbs. Steel
(SM) 764 lbs. Aluminum
Max. Fall Height: 105" (2,67 m)

FOR REFERENCE ONLY

Specifications are subject to change without notice.

Kids In Motion 195507 ZipKrooz®, Additional Ba t.

landscape structures®

Installation Instructions

1) **(Direct Bury)** Dig footings as shown. Refer to the Plan View Footing Layout.

2) Attach support posts to decks, using $^{3}/_{8}$" x 1 $^{1}/_{8}$" BHCS w/pin & $^{3}/_{8}$" flat washers. Refer to the Deck Support Attachment Detail.

3) Attach 5" crossover beams to posts at height shown. Refer to the Beam Attachment Detail.

4) Attach back to back crossovers to posts using 1 $^{3}/_{8}$" BHCS w/pin and $^{3}/_{8}$" tee nuts with $^{3}/_{8}$" jam nuts. Refer to the Back to Back Tee Clamp Detail.

5) Attach 2 $^{3}/_{8}$" crossover beam to post at height shown. Refer to the Beam Attachment Detail.

6) Attach 2 $^{3}/_{8}$" crossover beam to 2 $^{3}/_{8}$" crossover beam. Refer to the Back To Back 2 $^{3}/_{8}$" Crossovers Detail.

7) Attach the ZipKrooz tracks to the center of the crossover beams. Refer to the Track Attachment Detail.

8) Attach the ZipKrooz tracks to 2 $^{3}/_{8}$" crossover beam. Refer to the Track Assembly Detail. **IMPORTANT:** *Straight section of ZipKrooz tracks must be level.*

9) Insert trolley assembly, then bumpers into track ends. Line up hole in bumper with collars on track and insert pipe bolt. Fasten with $^{5}/_{8}$" x 1 $^{1}/_{2}$" BHCS w/pin and $^{5}/_{8}$" flat washers. Refer to the Bumper Detail.

10) **(Direct Bury)** With posts plumb and decks level, pour concrete footings. Refer to the Direct Bury Detail. **NOTE:** *Allow concrete to cure for 72 hours before attaching cable with pod to trolley.*

    (Surface Mount) Drill $^{1}/_{2}$" x 5" deep holes through post and deck support plates using hammer drill and $^{1}/_{2}$" masonry bit. Tap expansion anchors into drilled holes. Fasten 5" posts and deck support plates to expansion anchors using $^{1}/_{2}$" standard hex nuts with $^{1}/_{2}$" flat washers.

11) Attach ZipKrooz Seat Assy to trolley. Refer to the Trolley Assembly Detail.

12) Install $^{1}/_{4}$" x $^{5}/_{8}$" drive rivets in all half clamps and tee clamps. Refer to the Typical Tee Clamp Spec Sheet.

13) (Back To Back 2 $^{3}/_{8}$" Crossovers) Drill through 2 $^{3}/_{8}$" crossover clamps and into 5" post with a $^{1}/_{4}$" or "F" (only) drill bit, insert $^{1}/_{4}$" x $^{3}/_{8}$" drive rivets into holes through clamps and into post. Hammer drive rivet pins in until flush with head. Refer to the Back To Back 2 $^{3}/_{8}$" Crossovers Detail.

14) Apply Labels, as shown.

15) Install protective surfacing before users are allowed to play on the component.

FOR REFERENCE ONLY

Specifications are subject to change without notice.

landscape structures®

ISO 14001 CERTIFIED

ISO 9001 Certified

SAFETY N

Choose a protective surf[illegible] has a Critical Height Value of at least the height of the Highest Accessible Part/Fall Height of the adjacent equipment. (Ref. ASTM F1487.)

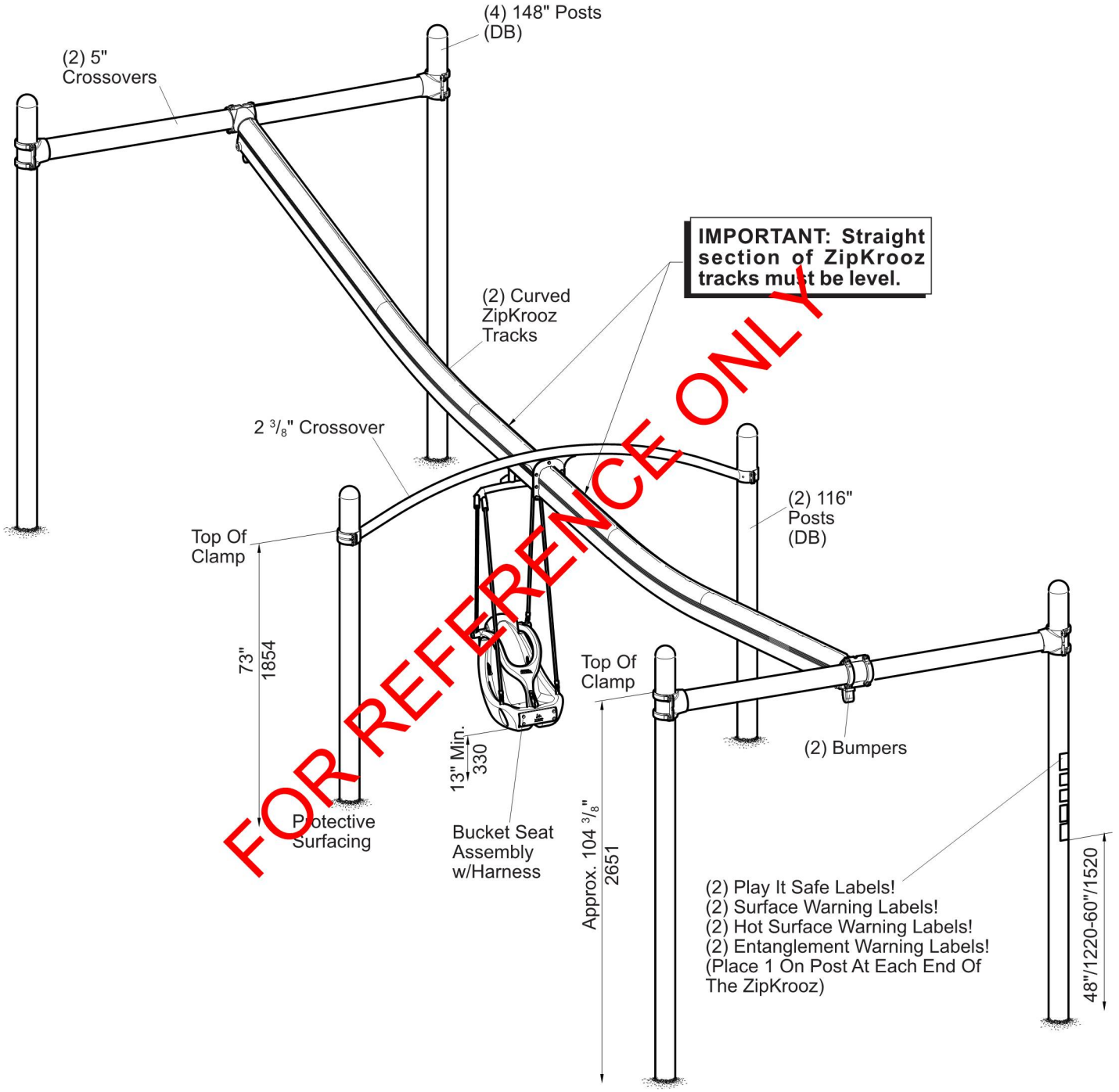

FOR REFERENCE ONLY

Kids In Motion **196212 ZipKrooz®, Assisted, 34 Ft.** Sheet 3

© 2022 by Landscape Structures. All rights reserved.

Document #3[illegible]

landscape structures®

ISO 14001 CERTIFIED

ISO 9001 Certified

SAFETY NOTE

Choose a protective surfacing material has a Critical Height Value of at least the height of the Highest Accessible Part/Fall Height of the adjacent equipment. (Ref. ASTM F1487.)

PLAN VIEW/FOOTING LAYOUT

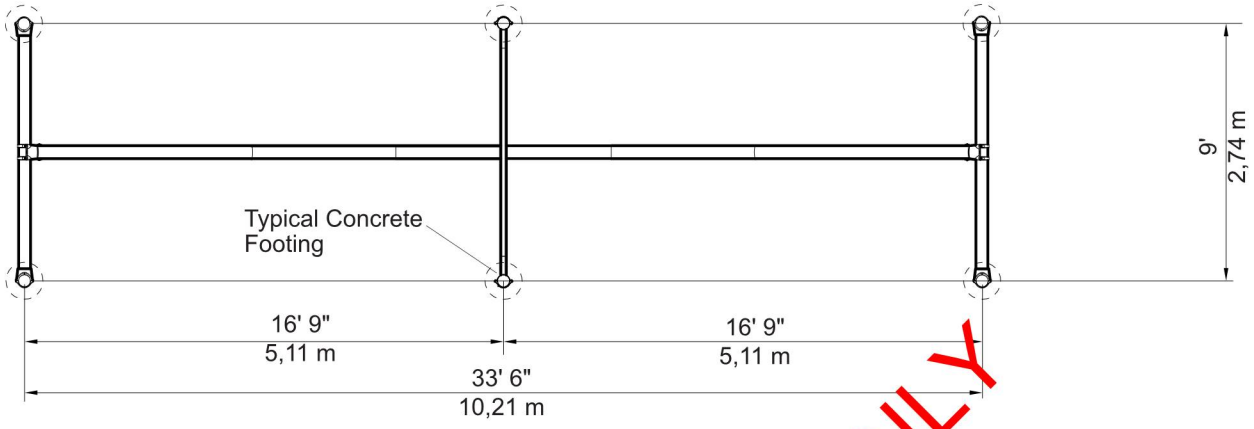

FOR REFERENCE ONLY

DETAIL
DIRECT BURY

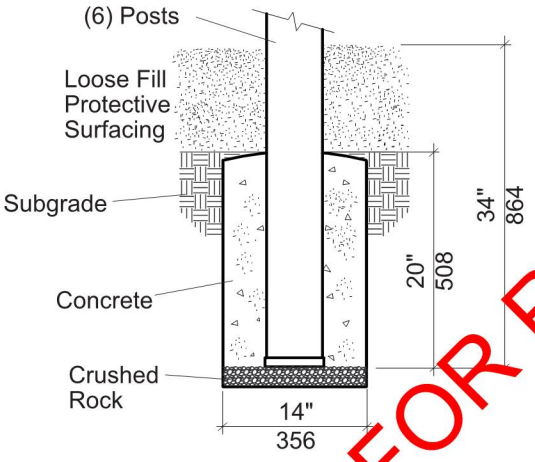

DETAIL
SURFACE MOUNT

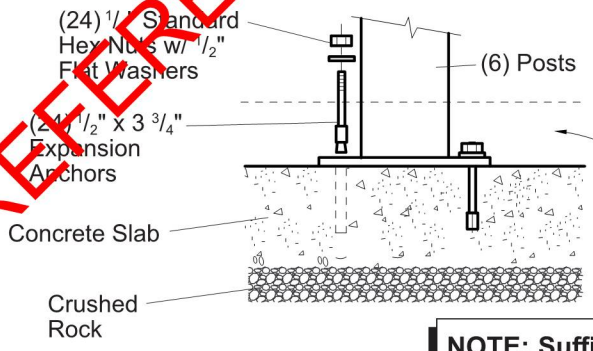

NOTE: Sufficient protective surfacing must cover hardware to satisfy fall height requirements.

© 2022 by Landscape Structures. All rights reserved.

landscape structures®

ISO 14001 CERTIFIED

ISO 9001 Certified

SAFETY N
Choose a protective surf… has a Critical Height Value of at least the height of the Highest Accessible Part/Fall Height of the adjacent equipment. (Ref. ASTM F1487.)

DETAIL
TRACK ATTACHMENT

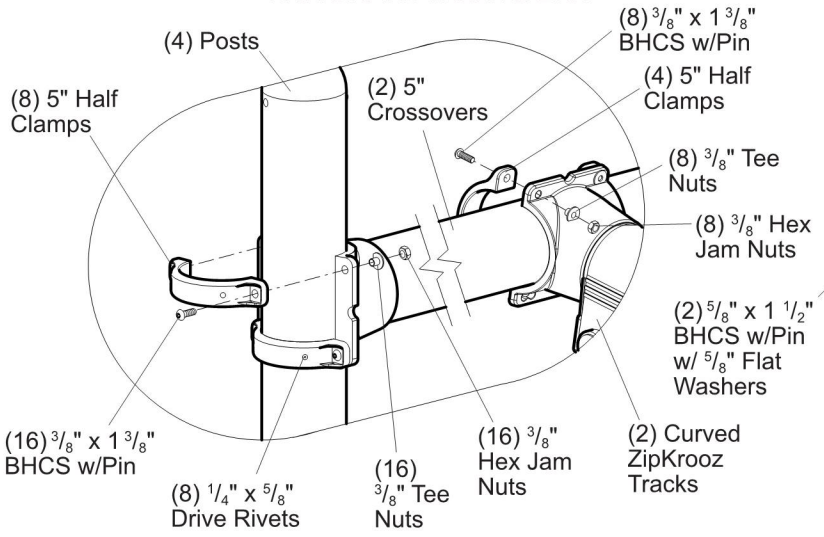

DETAIL
BUMPER ASSEMBLY

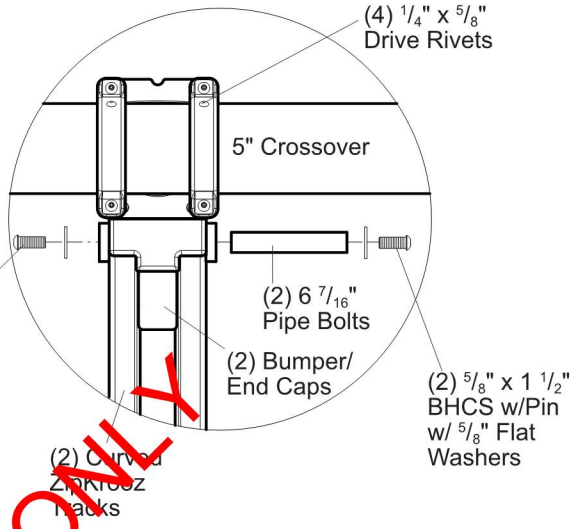

DETAIL
CROSSOVER ATTACHMENT

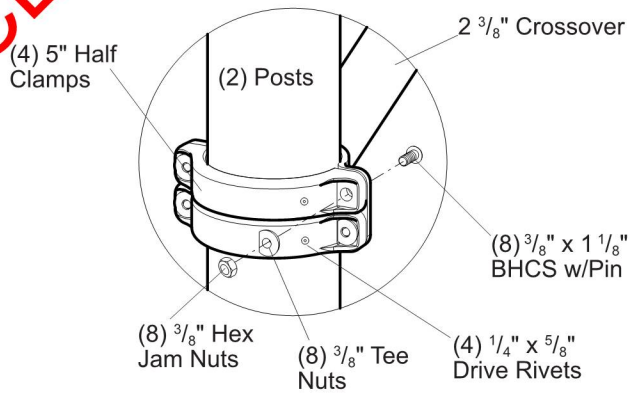

DETAIL
TRACK ASSEMBLY

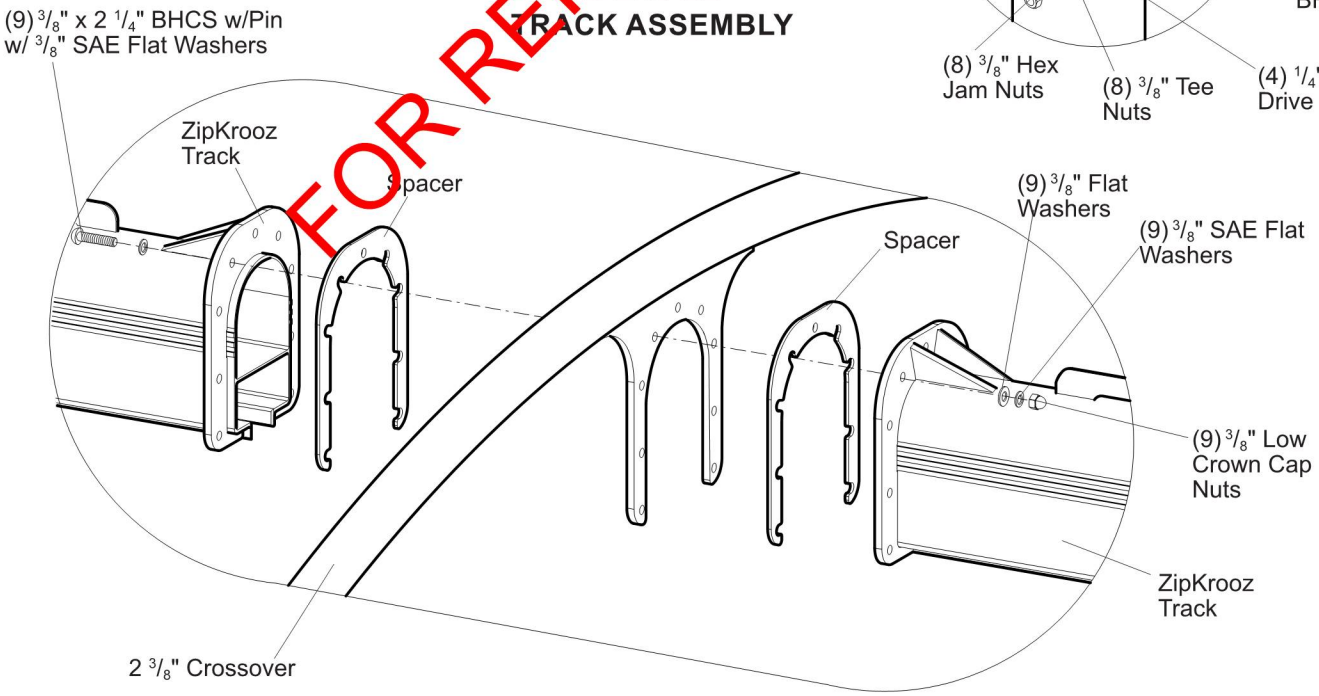

FOR REFERENCE ONLY

© 2022 by Landscape Structures. All rights reserved.

landscape structures®

ISO 14001 CERTIFIED

SAFETY NOTE

Choose a protective surfacing material that has a Critical Height Value of at least the height of the Highest Accessible Part/Fall Height of the adjacent equipment. (Ref. ASTM F1487.)

DETAIL
BUCKET SEAT ATTACHMENT

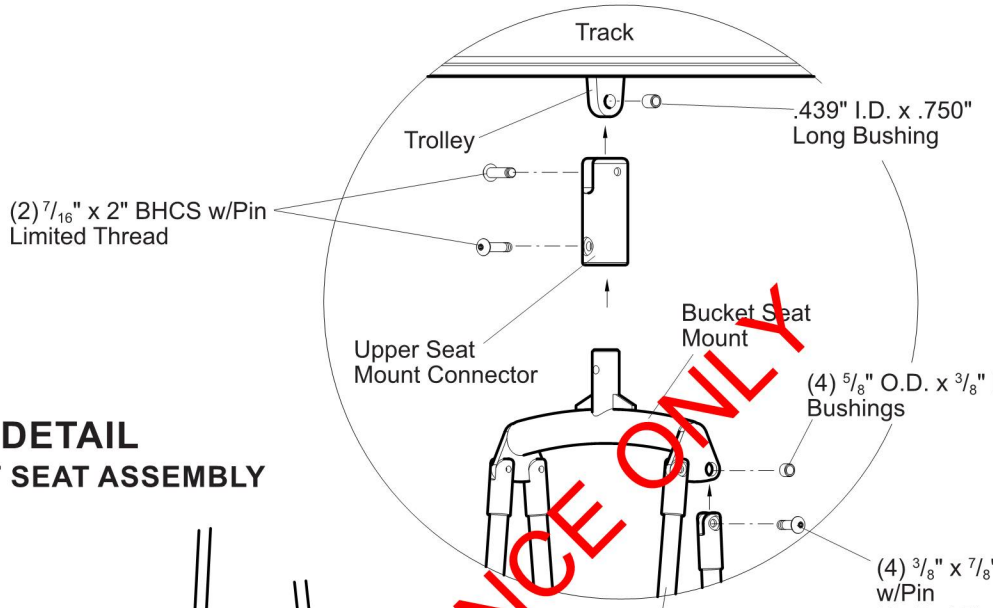

DETAIL
BUCKET SEAT ASSEMBLY

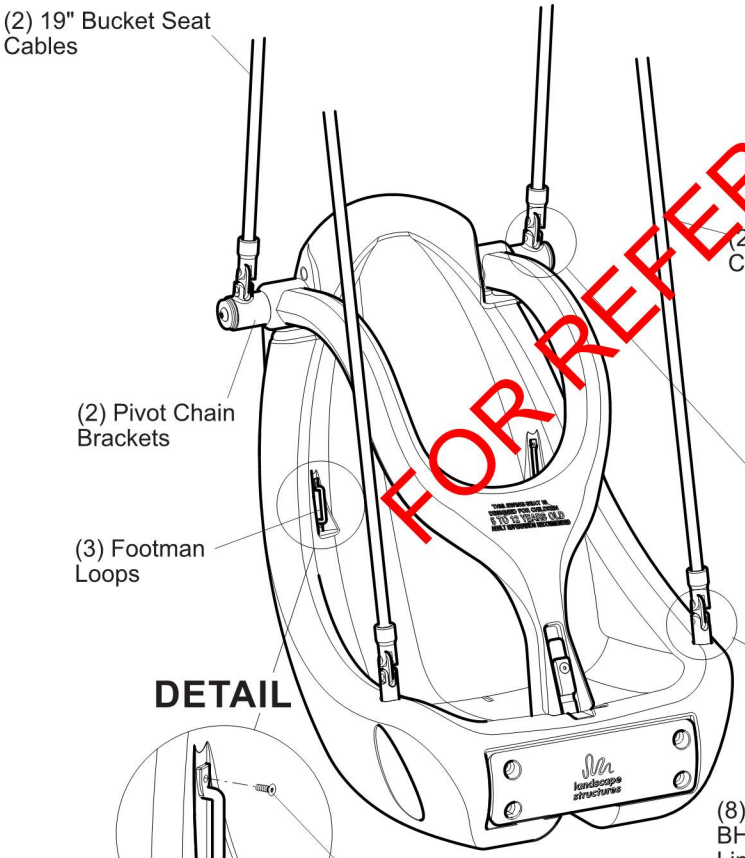

FOR REFERENCE ONLY

DETAIL
BRACKET

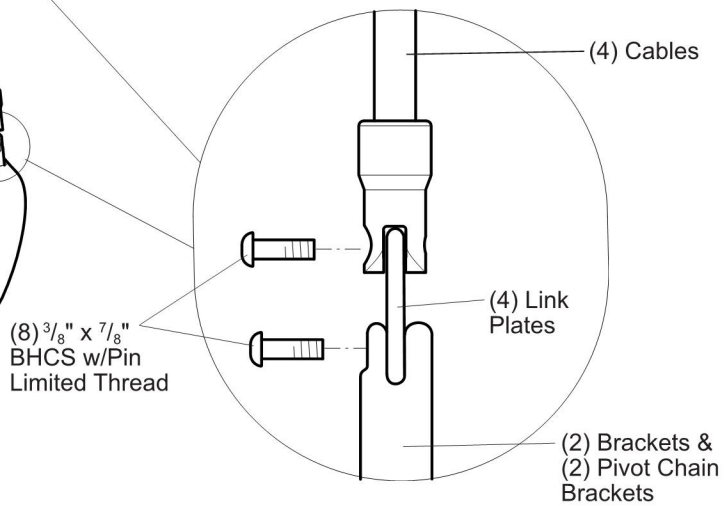

DETAIL

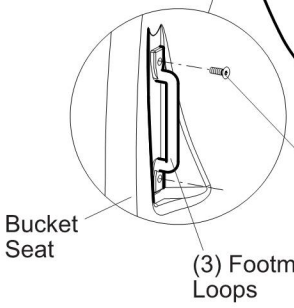

Kids In Motion
196212 ZipKrooz®, Assisted, 34 Ft.

601 7TH STREET SOUTH, DELANO, MINNESOTA 55328-8605 888-574-4678 LSI Install Help 888-438-6574 LSI Direct 763-972-5200 Int. FAX (763) 972-3185

© 2022 by Landscape Structures. All rights reserved.

Kids In Motion 196212 ZipKrooz®, Assiste[illegible]t.

landscape structures®

Parts List

Part#	Description	Qty.
100610	1/4" x 5/8" Drive Rivet, AL/SST	16
105327	5" Half Clamp, Specify Color	16
199896	Crossover Beam, Specify Color	2
107470	84" Steel Post w/Cap, SM, Specify Color	2
198216	116" Steel Post w/Cap, SM, Specify Color	4
107520	116" Steel Post w/Cap, DB, Specify Color	2
198214	148" Steel Post w/Cap, DB, Specify Color	4
107623	84" Aluminum Post w/Cap, SM, Specify Color	2
198217	116" Aluminum Post w/Cap, SM, Specify Color	4
107694	116" Aluminum Post w/Cap, DB, Specify Color	2
198215	148" Aluminum Post w/Cap, DB, Specify Color	4
142136	Bumper, Black	2
259433	Bucket Seat Assembly w/Harness, Specify Color	1
205138	2 3/8" Crossover, Specify Color	1
205042	Curved ZipKrooz Track, Specify Color	2
205855	Upper Seat Mount Connector, Aluminum	1
205861	Bucket Seat Mount, Specify Color	1
196328	36" Bucket Seat Cable, Black	2
196329	19" Bucket Seat Cable, Black	2
296855	ZipKrooz Trolley Assembly, Black	1
205192	Spacer, Aluminum	2
206171	**ZipKrooz 34 Ft. Hardware Package**	1
100198	3/8" x 1 1/8" BHCS w/Pin, SST	8
113027	3/8" x 1 3/8" BHCS w/Pin, SST	24
100201	5/8" x 1 1/2" BHCS w/Pin, SST	4
100349	3/8" Low Crown Cap Nut, SST	9
100351	3/8" Tee Nut, SST	32
100365	3/8" SAE Flat Washer, SST	18
100362	3/8" Flat Washer, SST	[illegible]
100366	5/8" Flat Washer, SST	[illegible]
100199	3/8" x 2 1/4" BHCS w/Pin, SST	[illegible]
121105	6 7/16" Aluminum Pipe Bolt	[illegible]
115176	ASTM HD Surface Warning Label	2
156846	Play Safe Label, 2-12 YRS.	2
182212	Entanglement Warning Label	2
182213	Hot Surface Warning Label	2
128296	3/8" Hex Jam Nut, SST	32
254290	**Assisted Bucket Seat w/Yoke Hdw. Package**	1
100290	3/8" x 7/8" BHCS w/Pin Limited Thread, SST	12
106035	Seat Mounting Bracket	2
127179	5/8" O.D. x 3/8" Long Bushing, SST	4
207709	Footman Loop, SST	3
162462	#10-24 x 1/2" Pan Head Screw, SST	6
196321	5/16" x 1" x 2 1/2" Link Plates, SST	4
157704	7/16" x 2" BHCS w/Pin Limited Thread, SST	2
203702	.439" I.D. x .750" Long Bushing, SST	1
183388	**4-Hole (SM) Hardware Package**	6
100322	½" Standard Hex Nut, SST	24
100363	½" Flat Washer, SST	24
176046	½" x 3 3/4" Expansion Anchor	24

DB = Direct Bury
SM = Surface Mount

Specifications

Track: Extruded from 6005-T4 aluminum alloy. Finish: ProShield®, color specified.

Bumper: Urethane, black in color.

Spacer: .190"(4,82 mm) Thick aluminum sheet.

Bucket Seat Assy.: **(Bucket Seat & Yoke)** Rotationally molded from U.V. stabilized linear low density polyethylene, color specified. **(Pipebolt)** Made from 1.125" (28,58 mm) O.D. 6005-T5 threaded annodized aluminum tube. **(Bearings)** UHMW PE lubricated. **(Brackets)** Made from 356-T6 aluminum.

Bucket Seat Mount: Weldment comprised of 1.42" (36,06 mm) diameter stainless steel, 1.660" (42,16 mm) O.D. RS20 (.085"-.095") (2,16 mm-2,41 mm) wall galvanized steel tubing, 3/8" (9,53 mm) thick HRPO steel plate and 1/4" (6,35 mm) HRPO steel plate. Finish: ProShield®, color specified.

Posts: See PlayBooster® (PB) General Specifications.

Seat Mounting Bracket: Cast from 535 aluminum magnesium.

Trolley Assy.: Steel body with urethane rollers. Completely assembled. Steel Body Finish: ProShield®, black in color.

Bucket Seat Bumper: Molded from U.V. stabilized black EPDM rubber encapsulating 11 GA (.120") (3,05 mm) HRPO steel sheet.

ZipKrooz Crossover: Weldment comprised of 2.375" (60,33 mm) O.D. RS40 (.130"-.140") (3,30 mm-3,55 mm) wall galvanized steel tubing, 3/8" (9,52 mm) thick HRPO steel plate and 1/4" (6,35 mm) thick HRPO steel. Finish: ProShield®, color specified.

Crossover: Weldment comprised of tee clamps and a 5" (127 mm) O.D. extruded 6005-T5 aluminum alloy tube with a .125" (3,17 mm) wall Finish: ProShield, color specified.

Cable Assembly: **(Cable)** Made of tightly woven polyester-wrapped, six-stranded galvanized-steel cable with a polypropylene core. **(Cable Connectors)** 6063-T6 aluminum.

Clamp: Cast aluminum. Finish: ProShield, color specified.

Fasteners: Primary fasteners shall be socketed and pinned tamperproof in design, stainless steel (SST) per ASTM F 879 unless otherwise indicated (see specific product installation/specifications).

Installation Time: **(DB)** Approx. 10 man hours
(SM) Approx. 9 man hours

Min. Area Req.: 50' 8" x 21' 5" (15,44 m x 6,53 m)

Concrete: **(DB)** Approx. 10.69 cu. ft.

Weight: **(DB)** 843 lbs. Steel
(DB) 553 lbs. Aluminum
(SM) 771 lbs. Steel
(SM) 535 lbs. Aluminum

Max. Fall Height: 105" (2,67 m)

FOR REFERENCE ONLY

Installation Instructions

1) **(Direct Bury)** Dig footings as shown. Refer to the Plan View Footing Layout.

2) Attach 5" crossover beams to posts at height shown. Refer to the Beam Attachment Detail.

3) Attach 2 $^{3}/_{8}$" crossover beams to posts at height shown. Refer to the Beam Attachment Detail.

4) Attach the ZipKrooz tracks to the center of the crossover beams. Refer to the Track Attachment Detail..

5) Attach the ZipKrooz tracks to 2 $^{3}/_{8}$" crossover beam. Refer to the Track Assembly Detail. **IMPORTANT:** *Straight section of ZipKrooz tracks must be level.*

6) Insert trolley assembly, then bumpers into track ends. Line up hole in bumper with collars on track and insert pipe bolt. Fasten with $^{5}/_{8}$" x 1 $^{1}/_{2}$" BHCS w/pin and $^{5}/_{8}$" flat washers. Refer to the Bumper Detail.

7) **(Direct Bury)** With posts plumb and decks level, pour concrete footings. Refer to the Direct Bury Detail. **NOTE:** *Allow concrete to cure for 72 hours before attaching cable with pod to trolley.*

   (Surface Mount) Drill $^{1}/_{2}$" x 3" deep holes through post plates using hammer drill and $^{1}/_{2}$" masonry bit. Tap expansion anchors into drilled holes. Fasten 5" posts to expansion anchors using $^{1}/_{2}$" standard hex nuts with $^{1}/_{2}$" flat washers.

8) Attach upper seat mount connector and bucket seat mount to trolley. Refer to the Bucket Seat Attachment Detail.

9) Insert seat mounting brackets into molded-in holes in front of bucket seat. Refer to Bucket Seat Assembly Details.

10) Attach ends of cables to pivot brackets and seat mounting brackets. Refer to Bucket Seat Assembly Details.

11) Attach cables to bucket seat mount. Refer to the Bucket Seat Attachment Detail.

12) Attach footman loops to bucket seat. Refer to the Bucket Seat Assembly Detail. **NOTE:** *Footman loops are used for seat belts (not included).*

13) Install $^{1}/_{4}$" x $^{5}/_{8}$" drive rivets in all 5" half clamps. Refer to the Typical Tee Clamp Spec Sheet.

14) Apply Labels, as shown.

15) Install protective surfacing before users are allowed to play on the component.

FOR REFERENCE ONLY

landscape structures®

ISO 14001 CERTIFIED

ISO 9001 Certified

SAFETY N

Choose a protective surf has a Critical Height Value of at least the height of the Highest Accessible Part/Fall Height of the adjacent equipment. (Ref. ASTM F1487.)

23206000

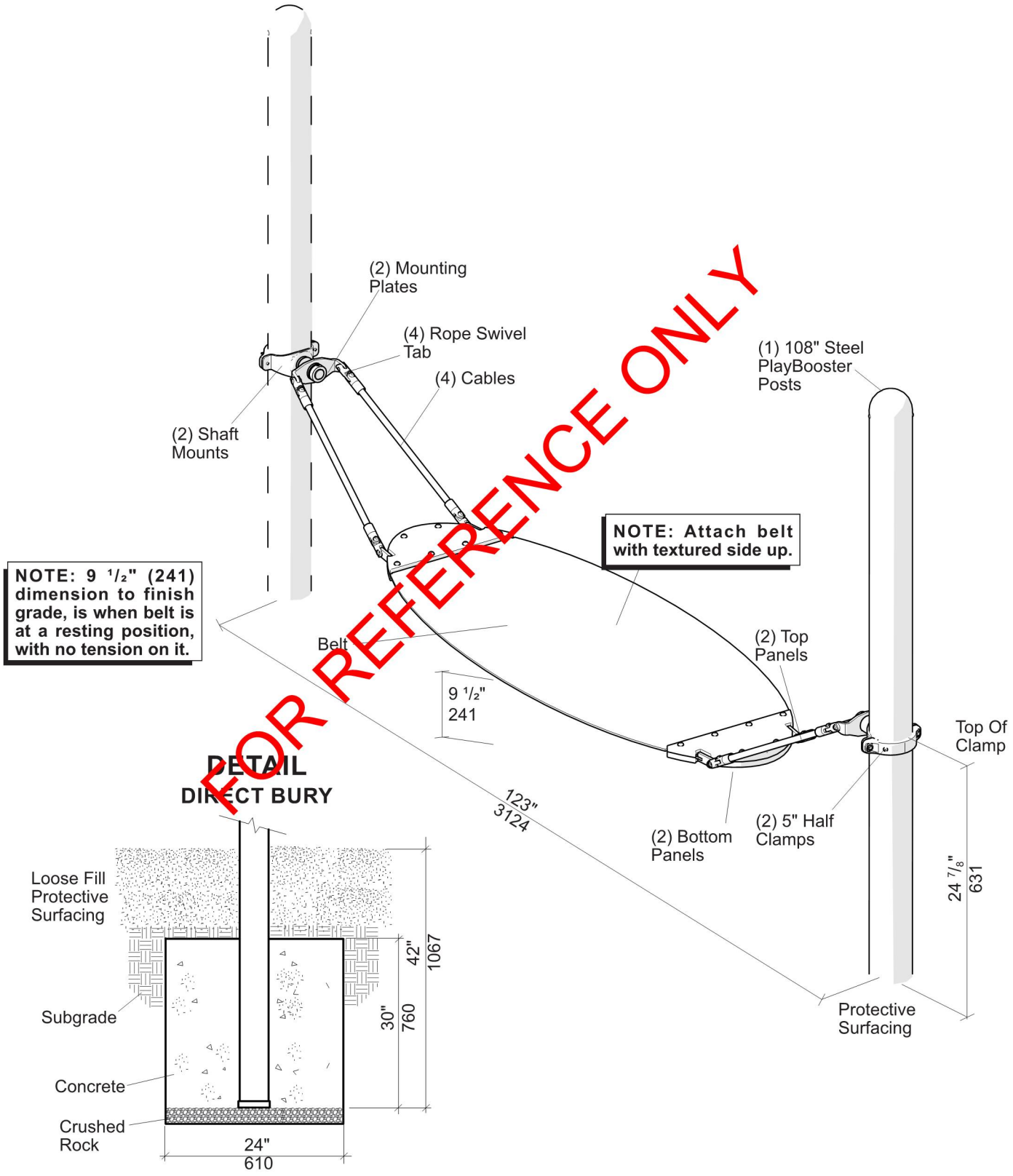

FOR REFERENCE ONLY

PlayBooster® 193176 Boogie Board™

© 2020 by Landscape Structures. All rights reserved.

landscape structures®

ISO 14001 CERTIFIED

ISO 9001 Certified

SAFETY N

Choose a protective surf[illegible] has a Critical Height Value of at least the height of the Highest Accessible Part/Fall Height of the adjacent equipment. (Ref. ASTM F1487.)

232060a

DETAIL
SHAFT MOUNT ASSEMBLY

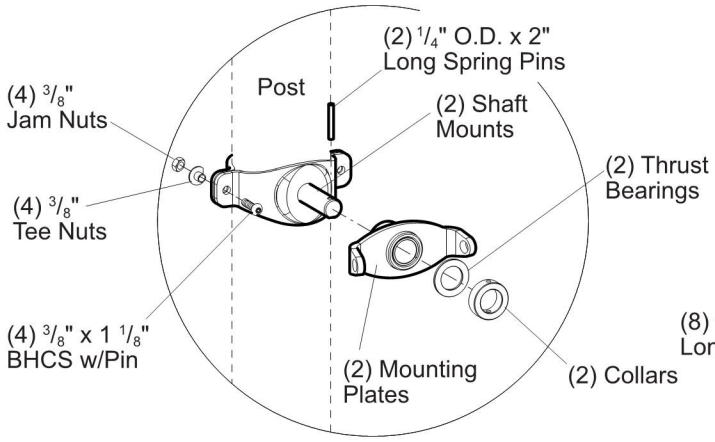

DETAIL
CABLE ATTACHMENT

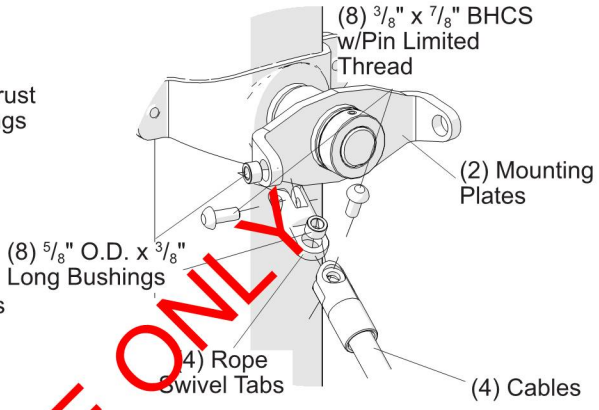

DETAIL
BELT PLATE ATTACHMENT

NOTE: Attach belt with textured side up.

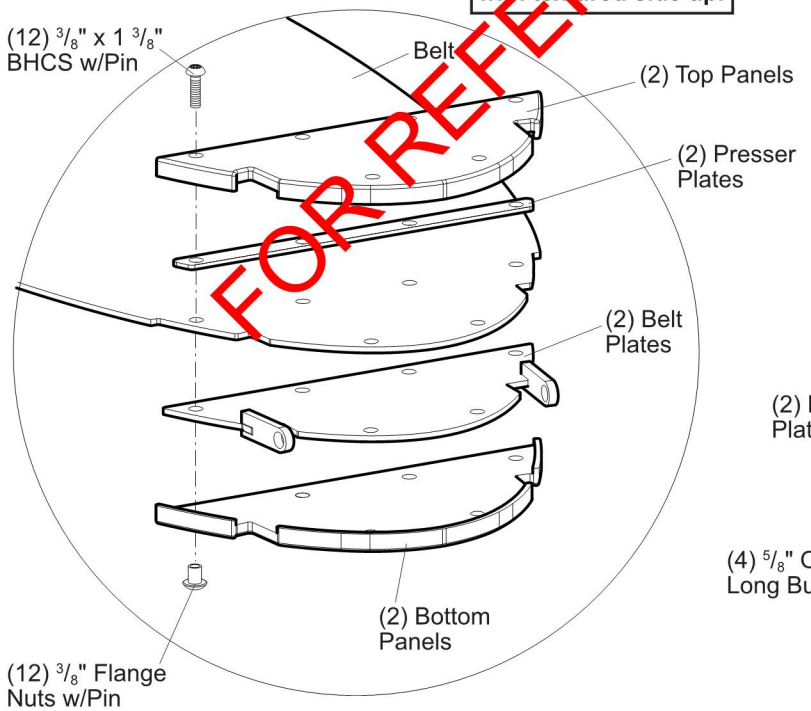

DETAIL
BOOGIE BOARD ATTACHMENT

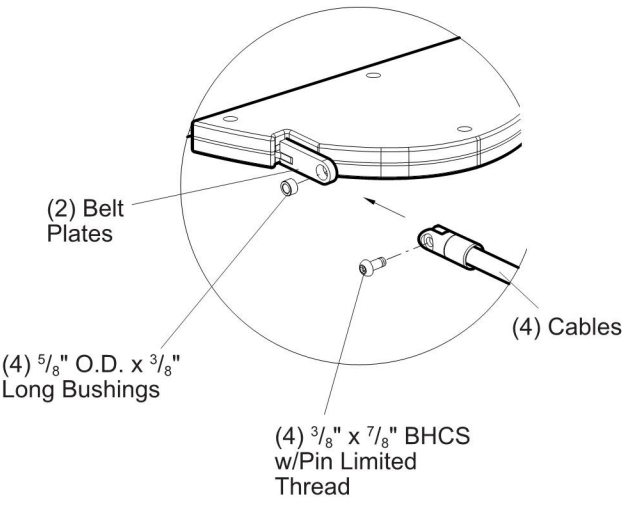

FOR REFERENCE ONLY

© 2020 by Landscape Structures. All rights reserved.

PlayBooster® Fun 193176 Boogie Boar

landscape structures®

Parts List

Part#	Description	Qty.
100610	1/4" x 5/8" Drive Rivet, AL/SST	2
105327	5" Half Clamp, Specify Color	2
140619	108" Steel Post w/Cap, 42" DB, Specify Color	1
228417	Belt, Specify Color	1
194377	Belt Plate, Specify Color	2
273374	Top Panel, Specify Color	2
194379	Bottom Panel, Specify Color	2
198514	Mounting Plate, Specify Color	2
194381	Shaft Mount, Specify Color	2
278154	22" Cable, Specify Color	4
196831	Presser Plate, Specify Color	2
218781	Rope Swivel Tab	4
267017	**Boogie Board Hardware Package**	1
100198	3/8" x 1 1/8" BHCS w/Pin, SST	4
113027	3/8" x 1 3/8" BHCS w/Pin, SST	12
100290	3/8" x 7/8" BHCS w/Pin Limited Thread, SST	12
100351	3/8" Tee Nut, SST	4
100353	3/8" Flange Nut w/Pin, SST	12
121135	1/4" O.D. x 2" Long Spring Pin, SST	2
127179	5/8" O.D. x 3/8" Bushing, SST	12
128296	3/8" Jam Nut, SST	4
120302	Collar, SST	2
149200	Thrust Bearing	2

Specifications

Post: See PlayBooster® (PB) General Specifications.

Mounting Plate: Weldment comprised of 3/8" (9,53 mm) thick SST and 2" (50,8 mm) O.D. x 1.50 " (38,1 mm) I.D. stainless steel housing. Finish: ProShield®, color specified. (Oilite Bronze Bearing) 1.500" (38,1 mm) O.D. x 1.257" (31,92 mm) I.D.

Shaft Mount: Weldment comprised of 1/4" (6,35 mm) thick HRPO flat steel and 1" (25 mm) diameter stainless steel shaft. Finish: ProShield®, color specified.

Belt Plate: Weldment comprised of 3/8" (9,53 mm) thick HRPO sheet steel and 1/4" (6,35 mm) thick HRPO sheet steel. Finish: ProShield®, color specified.

Presser Plate: Fabricated from7 GA. (.179") (4,54 mm) thick HRPO sheet steel. Finish: ProShield®, color specified.

Cable Assembly: **(Cable)** Made of tightly woven polyester-wrapped, six-stranded galvanized-steel cable with a polypropylene core. **(Cable Connectors)** 6063-T6 aluminum.

Panels: Permalene®, color specified.

Belt: .315" (8,00 mm) Thick mini rough top rubber belting with polyester fabric plys, black in color.

Clamps: Cast Aluminum. Finish: ProShield®, color specified.

Fasteners: Primary fasteners shall be socketed and pinned tamperproof in design, stainless steel (SST) per ASTM F 879 unless otherwise indicated (see specific product installation/specifications).

Installation Time: Approx. 3 man hours
Weight: 110 lbs.
Concrete: Approx. 7.85 cu. ft.
Fall Height: 24" (0,61 m)

Specifications are subject to change without notice.

Installation Instructions

1) **(Direct Bury)** Dig footings to dimensions shown.
2) Attach shaft mounts to posts at height shown. Refer to the Shaft Mount Assembly Detail.
3) Slide mounting plate, thrust bearing, and collar onto shaft mount shaft. Line up hole in collar with hole in shaft. Tap 1/4" O.D. x 2" long spring pin through collar and shaft. Refer to the Shaft Mount Assembly Detail.
4) Attach belt plates, presser plates and panels to belt. Refer to the Belt Plate Attachment Detail.
5) Insert 5/8" O.D. x 3/8" long bushings into belt plate tabs. Attach cables to belt plate tabs. Refer to the Boogie Board Attachment Detail.
6) Insert 5/8" O.D. x 3/8" long bushings into mounting plate holes. Attach cables to mounting plates. Refer to the Cable Attachment Detail.
7) With post plumb, pour concrete footing. Allow concrete footings to cure for a minimum of 72 hours before users are allowed to play on the structure.
8) Install 1/4" x 5/8" drive rivets in 5" half clamps. Drill through hole in 5" half clamps and into 5" post with a 1/4" or "F" (only) drill bit, insert drive rivet in hole through clamp and into post. Hammer drive rivet pin in until flush with head. Refer to the Typical Offset Hanger Clamp Spec Sheet.
9) Install protective surfacing before users are allowed to play on the structure.

FOR REFERENCE ONLY

ECO # 0101990 Document 27815600 replaces 27337500. Update Cable to 22". 12/15/2020 Added specify color to cable parts.

SAFETY NOTE

Choose a protective surfacing ma has a Critical Height Value of at least the height of the Highest Accessible Part/Fall Height of the adjacent equipment. (Ref. ASTM F1487.)

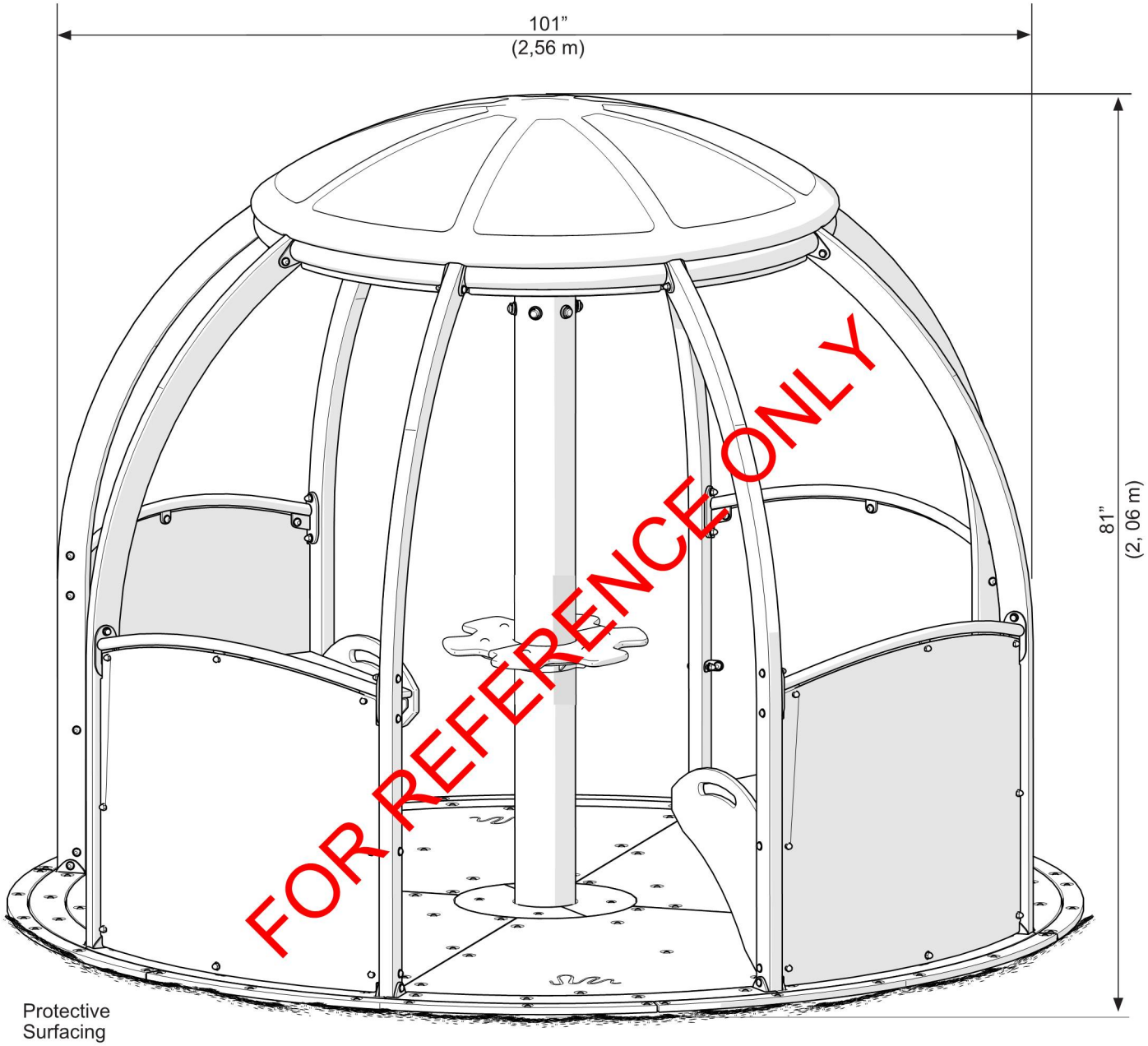

Scan the QR Code to the right, or type the URL into a browser to view the video

https://bit.ly/2ESCwd0

601 7th Street South, Delano, Minnesota 55328-8605 888-574-4678 LSI Install Help 888-438-6574 LSI Direct 763-972-5200 Int. FAX (763) 972-3185

© 2023 by Landscape Structures. All rights reserved

landscape structures®

DETAIL
DIRECT BURY

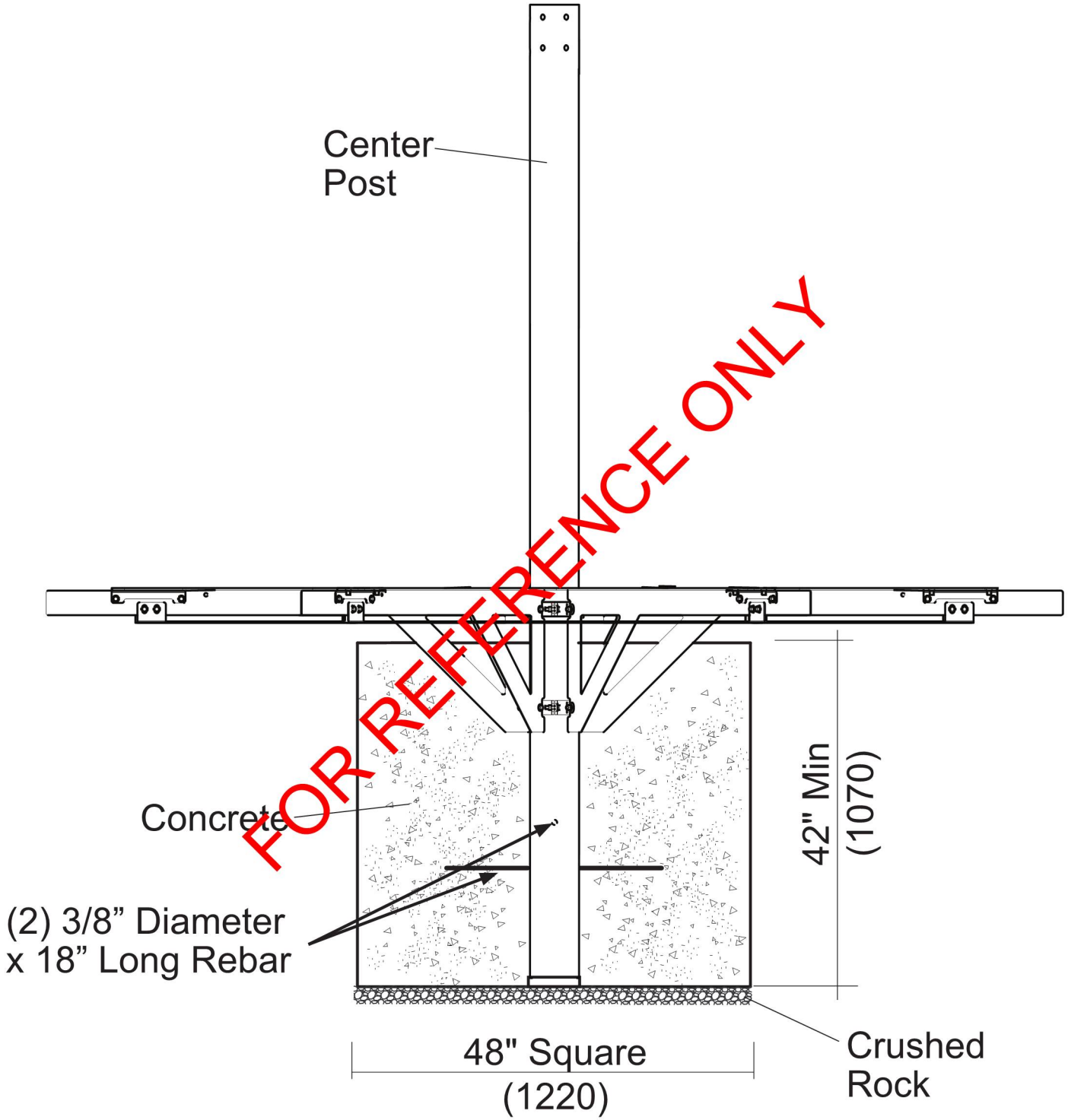

601 7th Street South, Delano, Minnesota 55328-8605 888-574-4678 LSI Install Help 888-438-6574 LSI Direct 763-972-5200 Int. FAX (763) 972-3185
© 2023 by Landscape Structures. All rights reserved

landscape structures®

DETAIL
DIRECT BURY

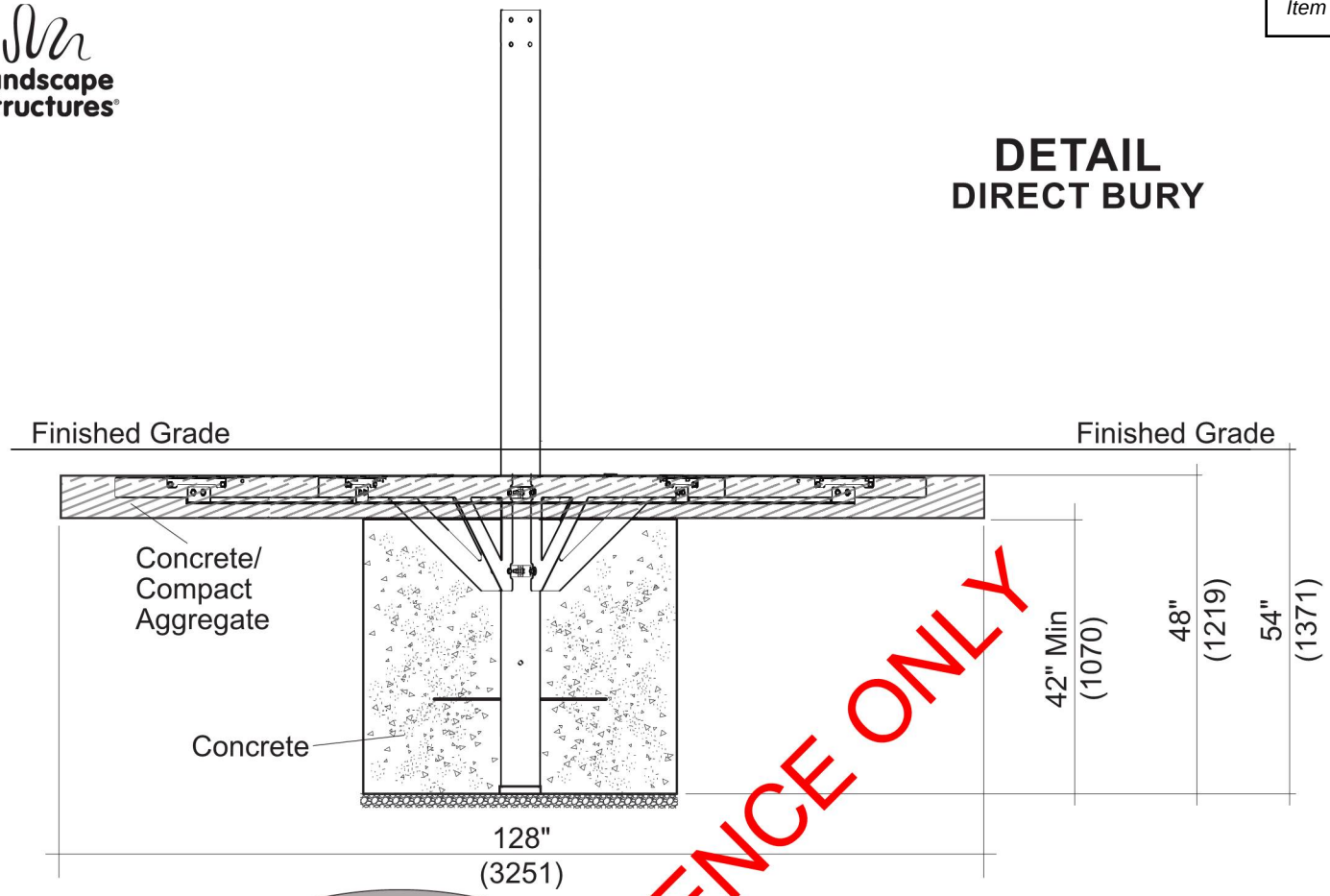

FOR REFERENCE ONLY

DETAIL
UNITARY SURFACING

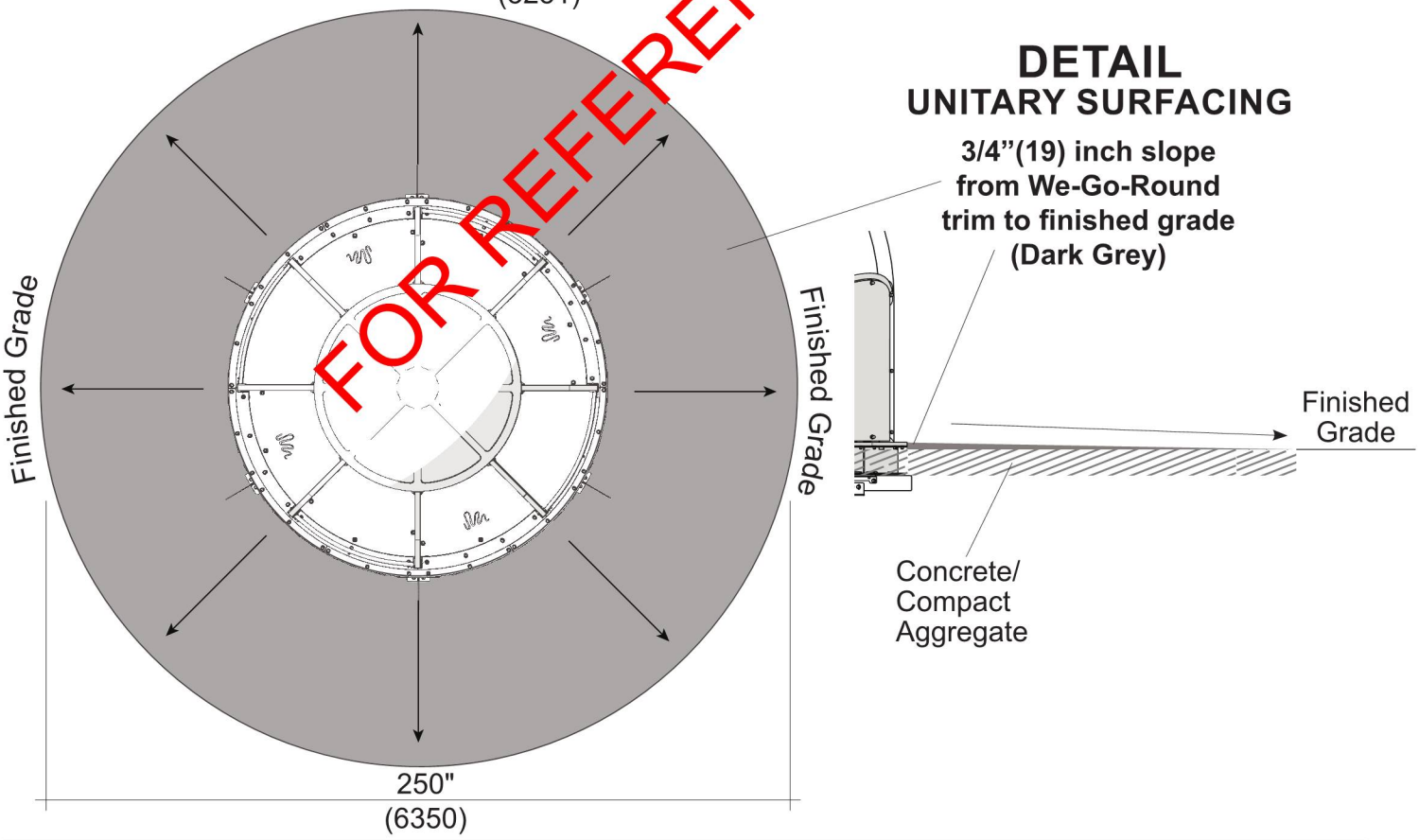

601 7th Street South, Delano, Minnesota 55328-8605 888-574-4678 LSI Install Help 888-438-6574 LSI Direct 763-972-5200 Int. FAX (763) 972-3185
© 2023 by Landscape Structures. All rights reserved

landscape structures®

FOUNDATION I

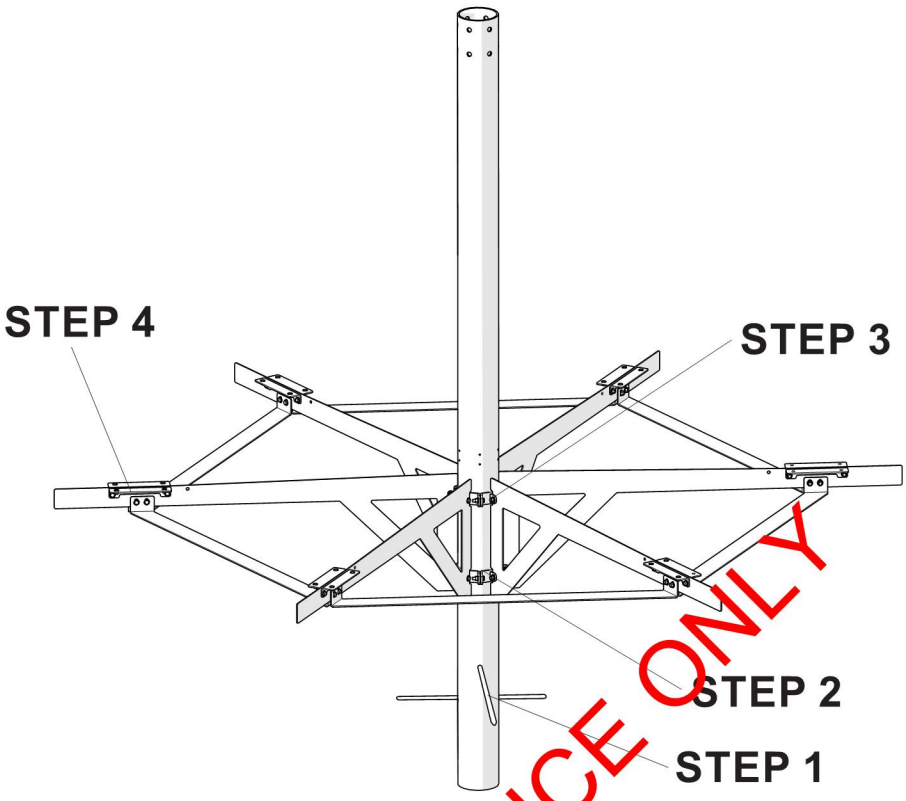

FOR REFERENCE ONLY

STEP 1

(2) 3/8” Diameter x 18” Long Rebar

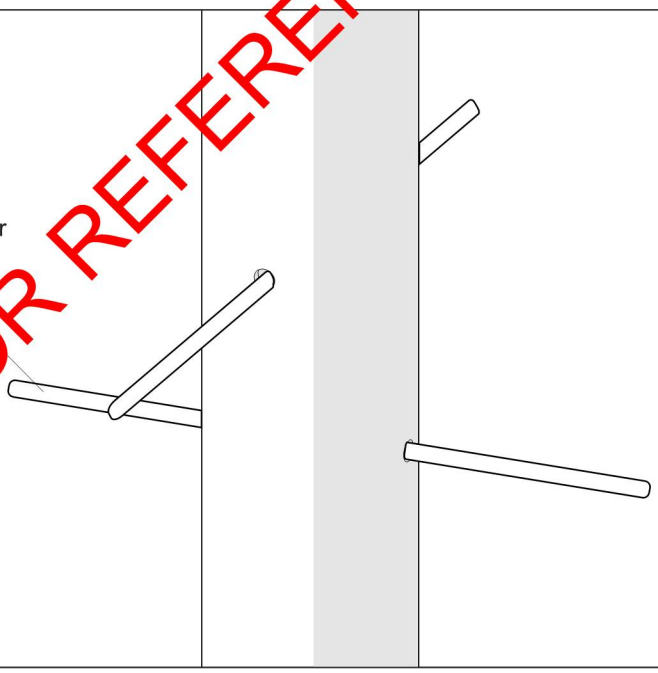

1x	6.0 OD x .25” x 119.50” Post (289361)	2x	3/8” x 18” Rebar (222399)

601 7th Street South, Delano, Minnesota 55328-8605 888-574-4678 LSI Install Help 888-438-6574 LSI Direct 763-972-5200 Int. FAX (763) 972-3185
© 2023 by Landscape Structures. All rights reserved

landscape structures®

STEP 2

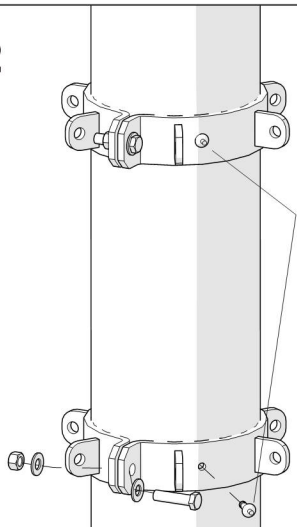

NOTE: Rivets will set clamp height and orientation.

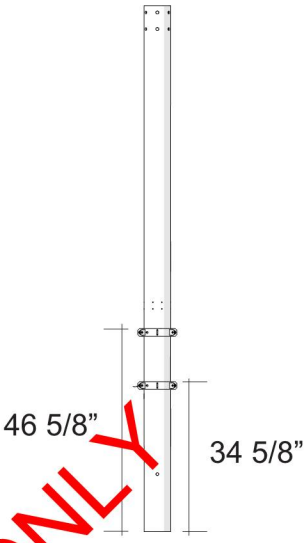

4x	Rib Clamp (249292)	4x	⅜” x 1 ½” Hex Screw (100208)
2x	1/4 x 5/8" Drive Rivet (10610)	8x	3/8" SAE Washer (100365)
4x	3/8" Standard Hex Nut (100327)		

FOR REFERENCE ONLY

STEP 3

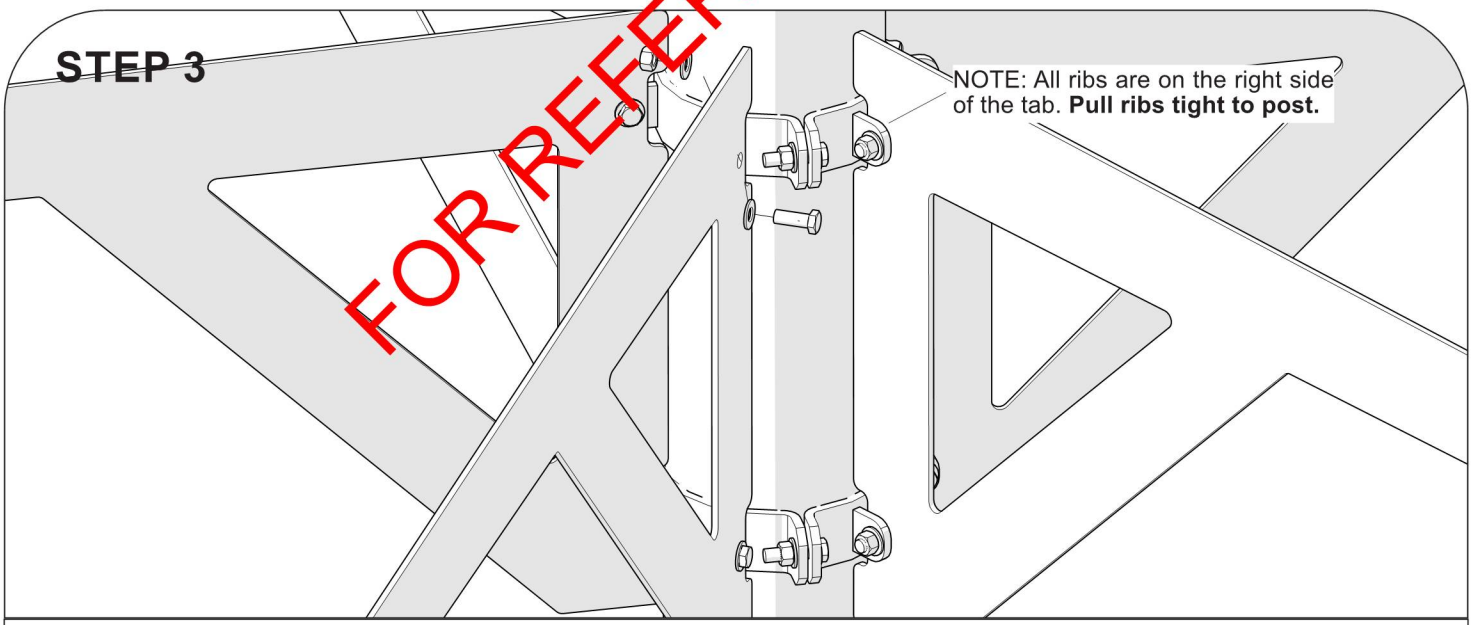

NOTE: All ribs are on the right side of the tab. **Pull ribs tight to post.**

6x	Rib (249295)	12x	⅜” x 1” Hex Screw (100206)
12x	3/8" Standard Hex Nut (100327)	24x	3/8" SAE Washer (100365)

601 7th Street South, Delano, Minnesota 55328-8605 888-574-4678 LSI Install Help 888-438-6574 LSI Direct 763-972-5200 Int. FAX (763) 972-3185
© 2023 by Landscape Structures. All rights reserved

landscape structures®

STEP 4

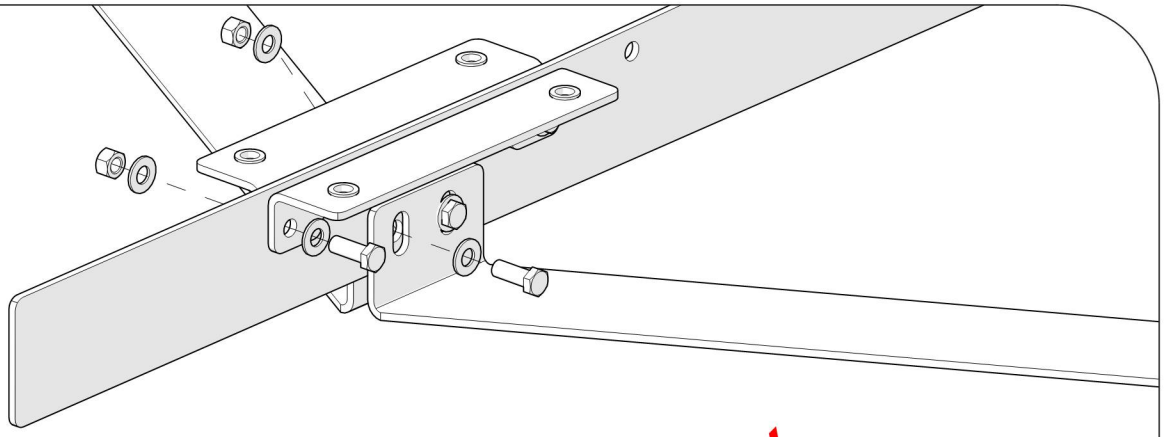

12x	Rib Bracket (249299)	24x	⅜" x 1" Hex Screw (100206)
24x	3/8" Standard Hex Nut (100327)	48x	3/8" SAE Washer (100365)
6x	Rib Footer (249297)		

FOR REFERENCE ONLY

FOUNDATION II

NOTE: Refer to page 9 for in-field photos of Foundation II installation.

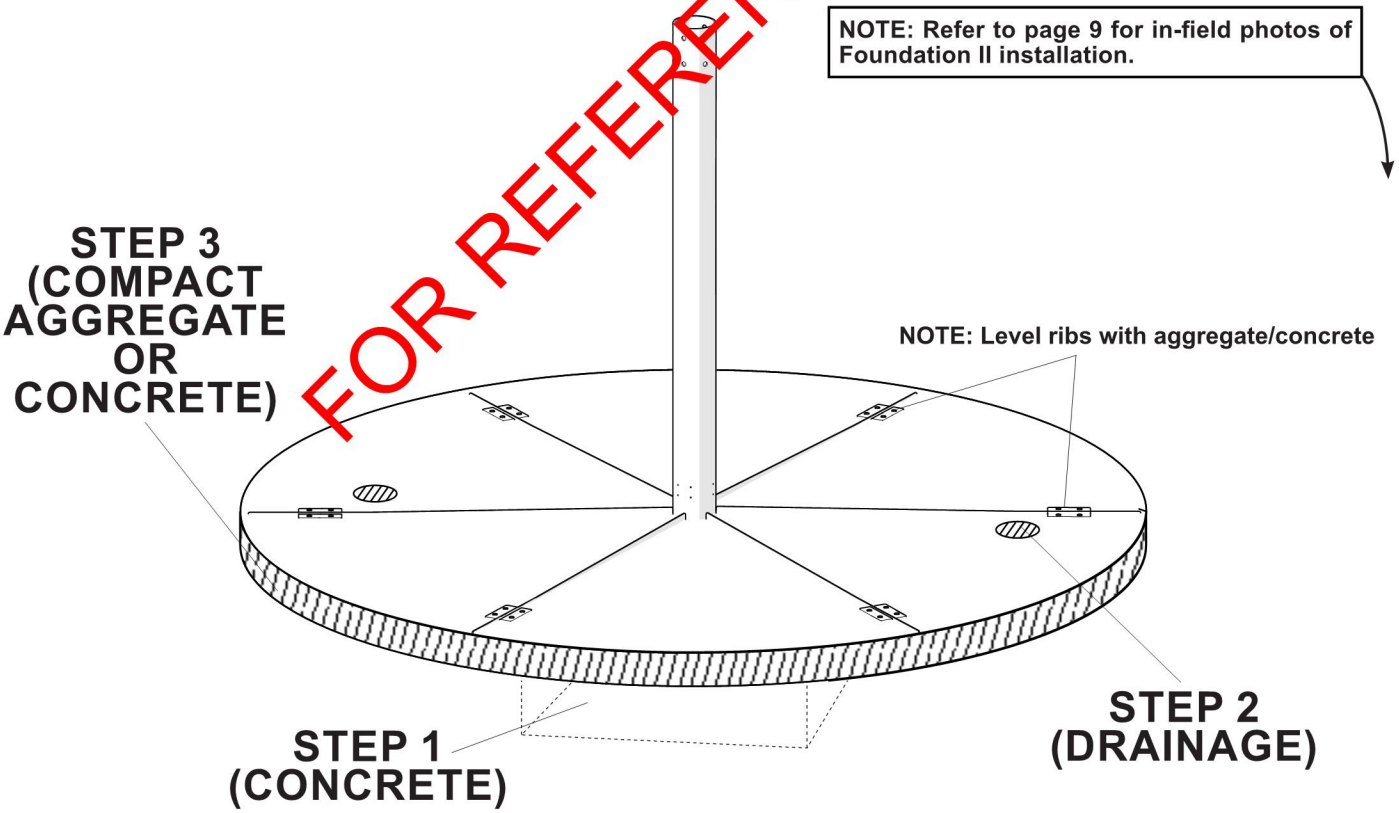

601 7th Street South, Delano, Minnesota 55328-8605 888-574-4678 LSI Install Help 888-438-6574 LSI Direct 763-972-5200 Int. FAX (763) 972-3185
© 2023 by Landscape Structures. All rights reserved

landscape structures®

STEP 1

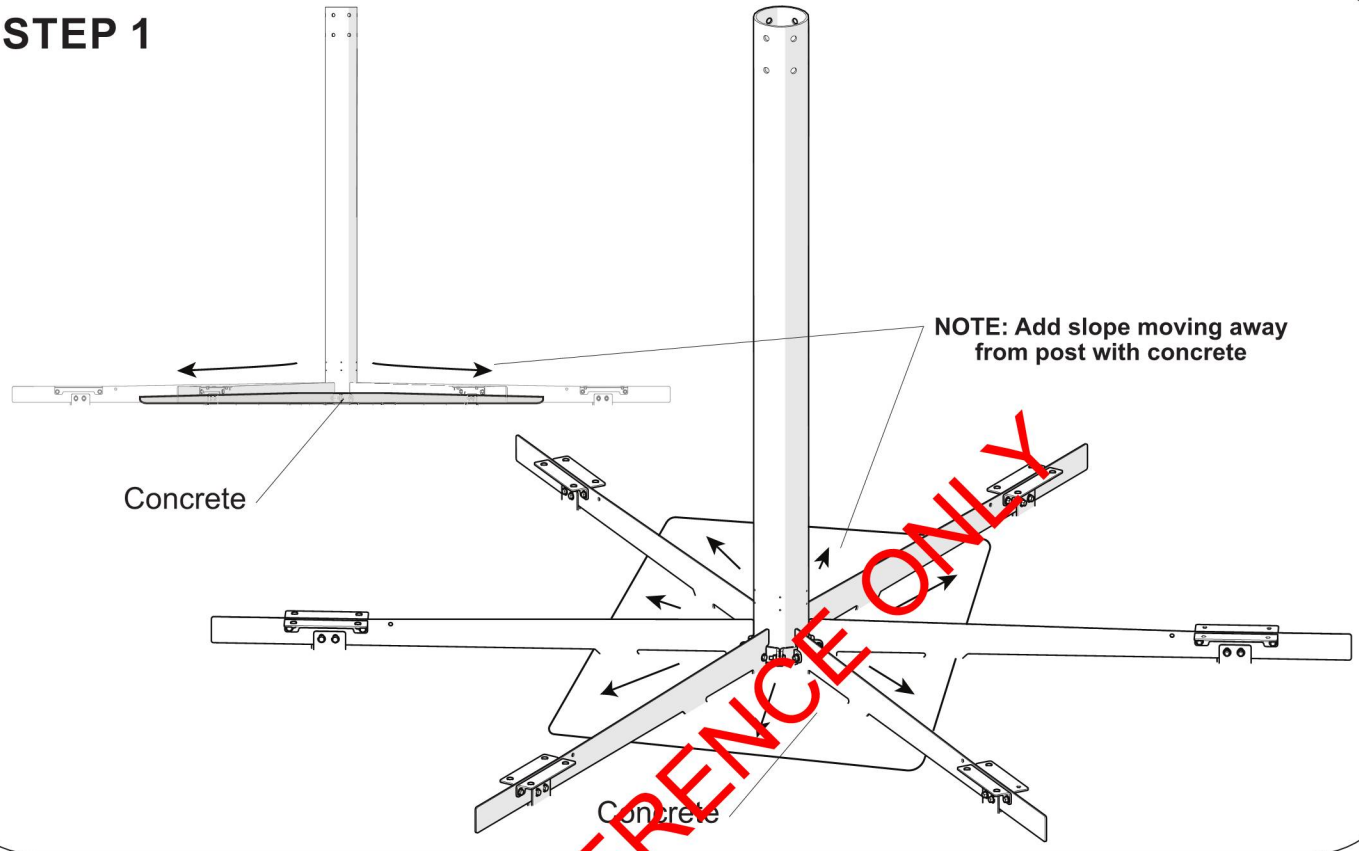

FOR REFERENCE ONLY

STEP 2

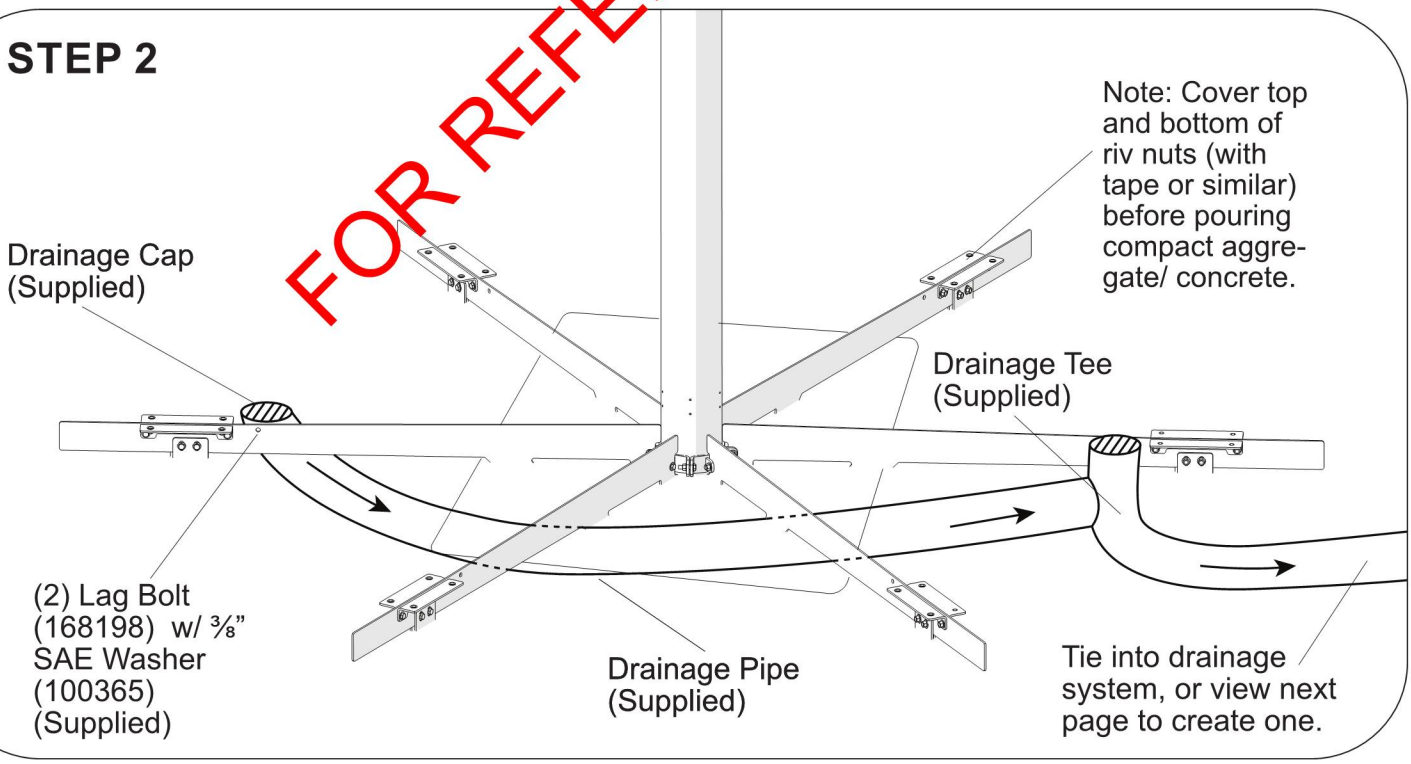

601 7th Street South, Delano, Minnesota 55328-8605 888-574-4678 LSI Install Help 888-438-6574 LSI Direct 763-972-5200 Int. FAX (763) 972-3185
© 2023 by Landscape Structures. All rights reserved

landscape structures®

STEP 3

Note: For sites without an existing drainage system.

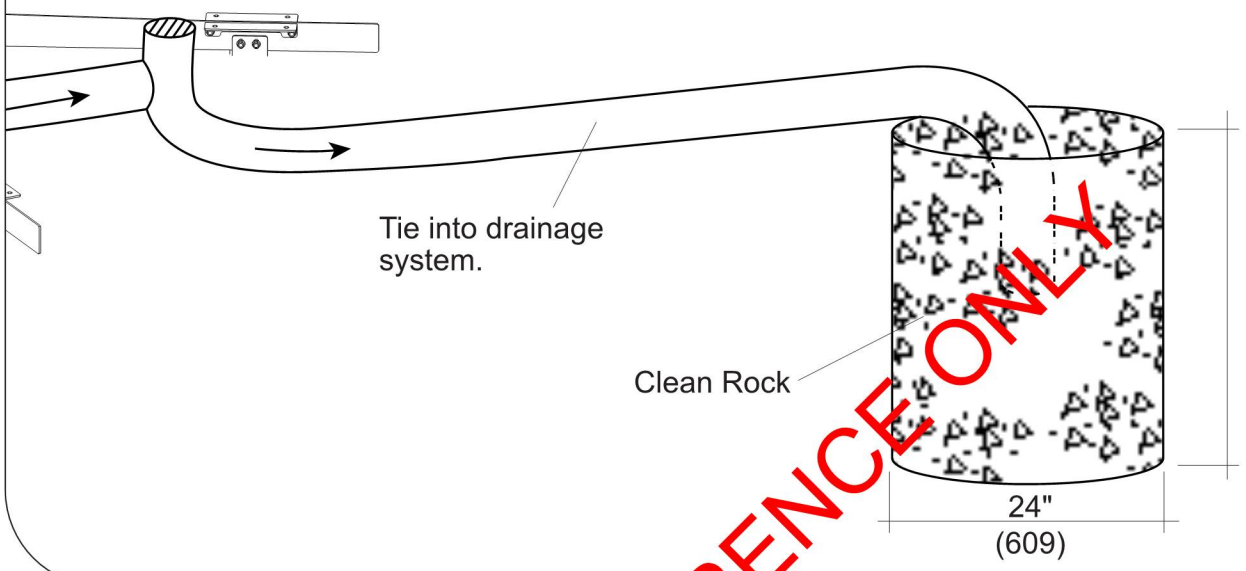

FOR REFERENCE ONLY

STEP 4

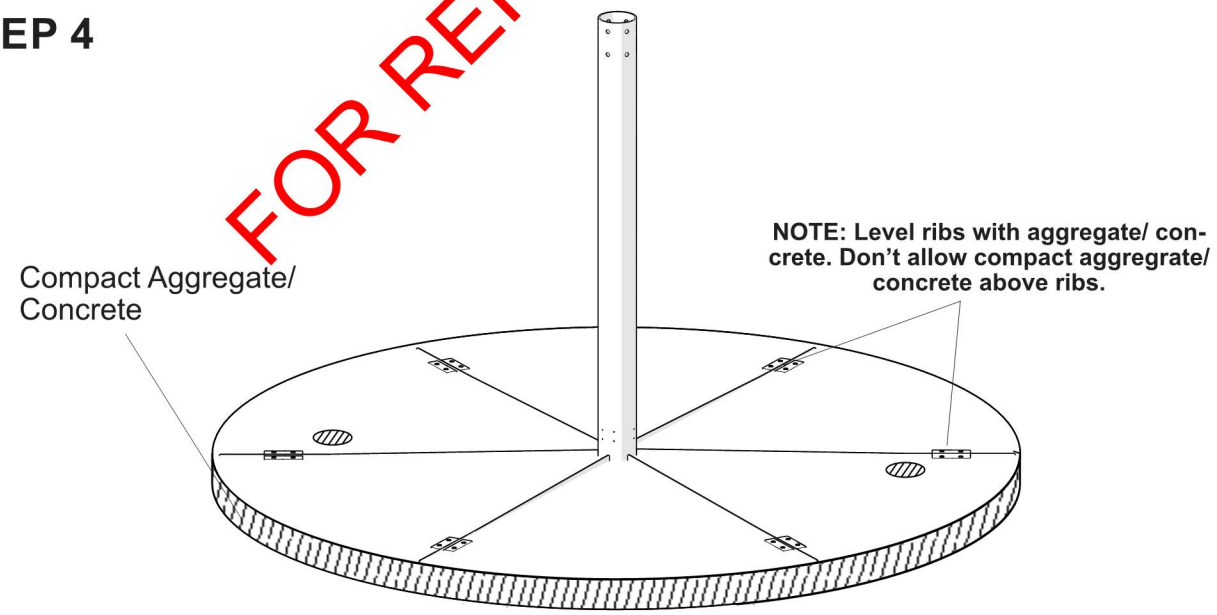

601 7th Street South, Delano, Minnesota 55328-8605 888-574-4678 LSI Install Help 888-438-6574 LSI Direct 763-972-5200 Int. FAX (763) 972-3185
© 2023 by Landscape Structures. All rights reserved

landscape structures®





FOR REFERENCE ONLY



601 7th Street South, Delano, Minnesota 55328-8605 888-574-4678 LSI Install Help 888-438-6574 LSI Direct 763-972-5200 Int. FAX (763) 972-3185

© 2023 by Landscape Structures. All rights reserved

landscape structures®

STRUCTURE

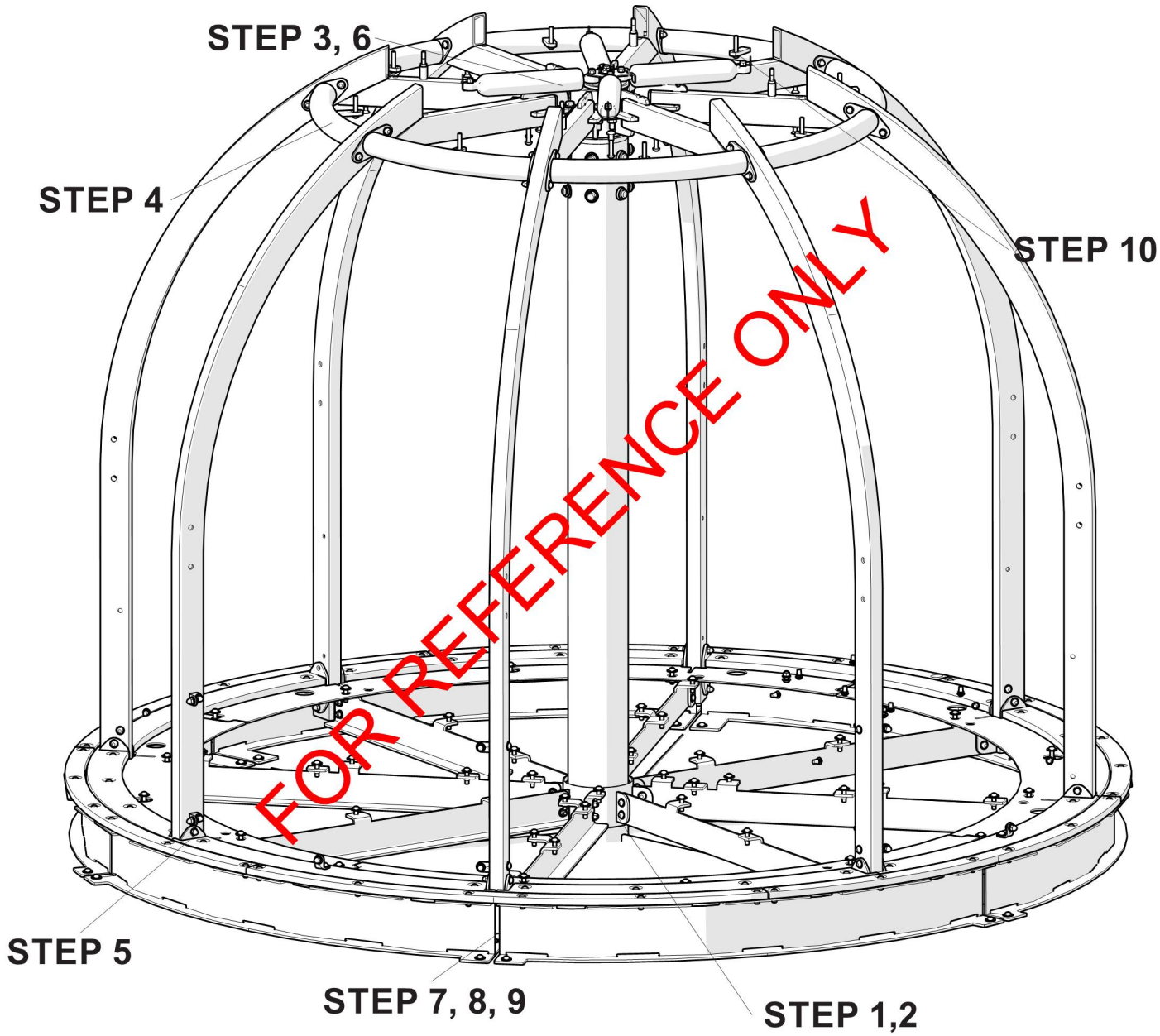

601 7th Street South, Delano, Minnesota 55328-8605 888-574-4678 LSI Install Help 888-438-6574 LSI Direct 763-972-5200 Int. FAX (763) 972-3185
© 2023 by Landscape Structures. All rights reserved

landscape structures®

STEP 1

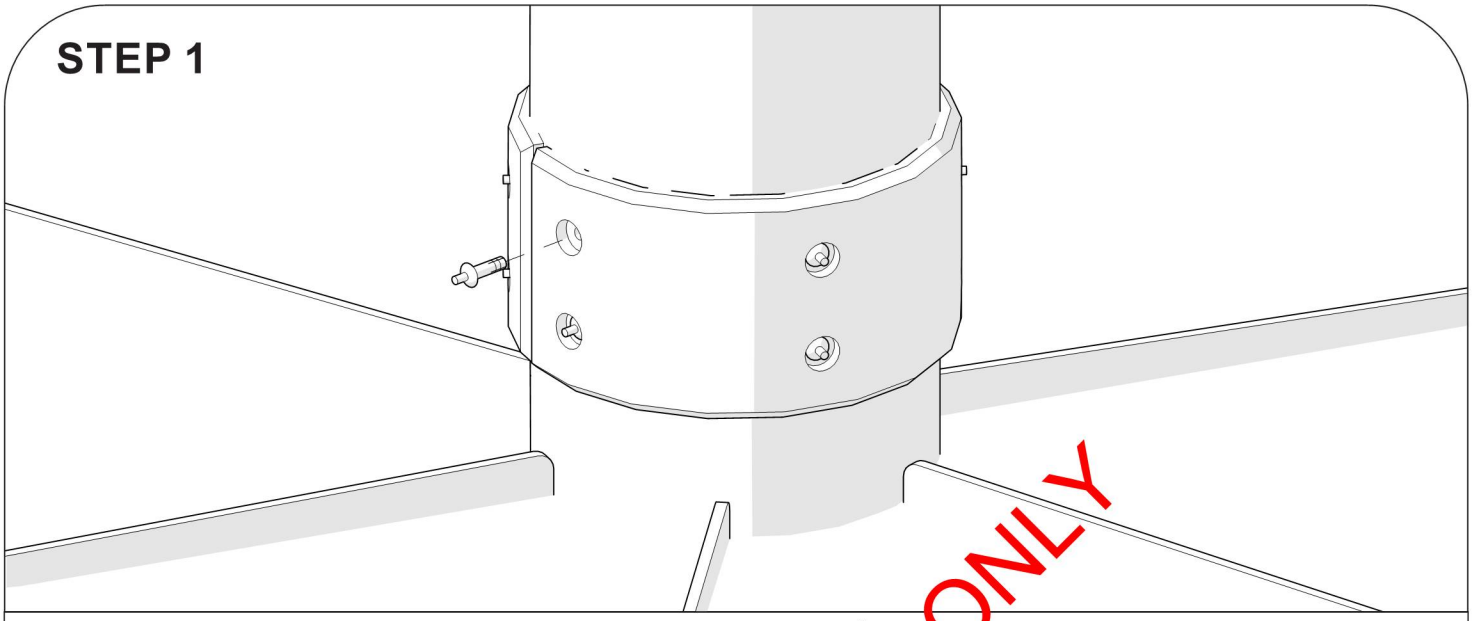

12x	$^{1}/_{4}$" x $^{3}/_{8}$" Drive Rivet (100611)	2x	Bushing Tube (292617)

FOR REFERENCE ONLY

https://bit.ly/2T8GfGk

STEP 2

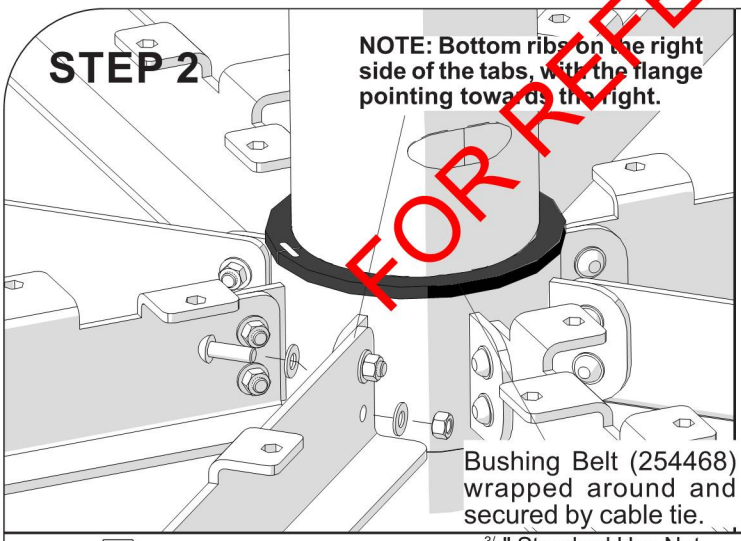

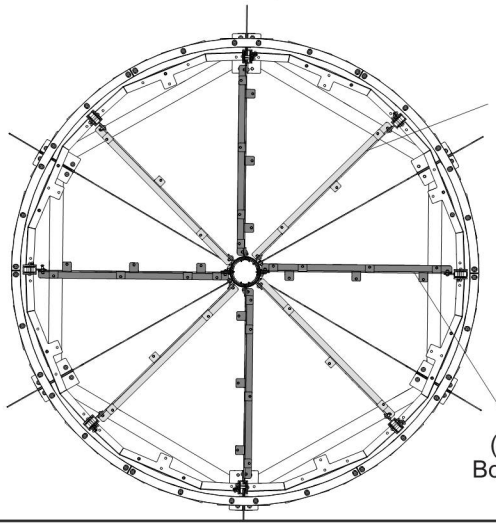

16x	$^{3}/_{8}$" Standard Hex Nut (100327)	16x	$^{3}/_{8}$ x 1 $^{1}/_{8}$" BHCS (100198)
4x	3 Tab Bottom Rib (249267)	32x	$^{3}/_{8}$" SAE Washer (100365)
4x	7 Tab Bottom Rib (249266)	1x	Bottom Rib Mount (248520)
1x	Bushing Belt (254468)	1x	Cable Tie 5 - 3/4" (109680)

601 7th Street South, Delano, Minnesota 55328-8605 888-574-4678 LSI Install Help 888-438-6574 LSI Direct 763-972-5200 Int. FAX (763) 972-3185
© 2023 by Landscape Structures. All rights reserved

landscape structures®

REFERENCE FOR STEP 4

NOTE: Orientation of the Vertical ribs and 3 Tab/ 7 Tab Bottom ribs are independent of each other.

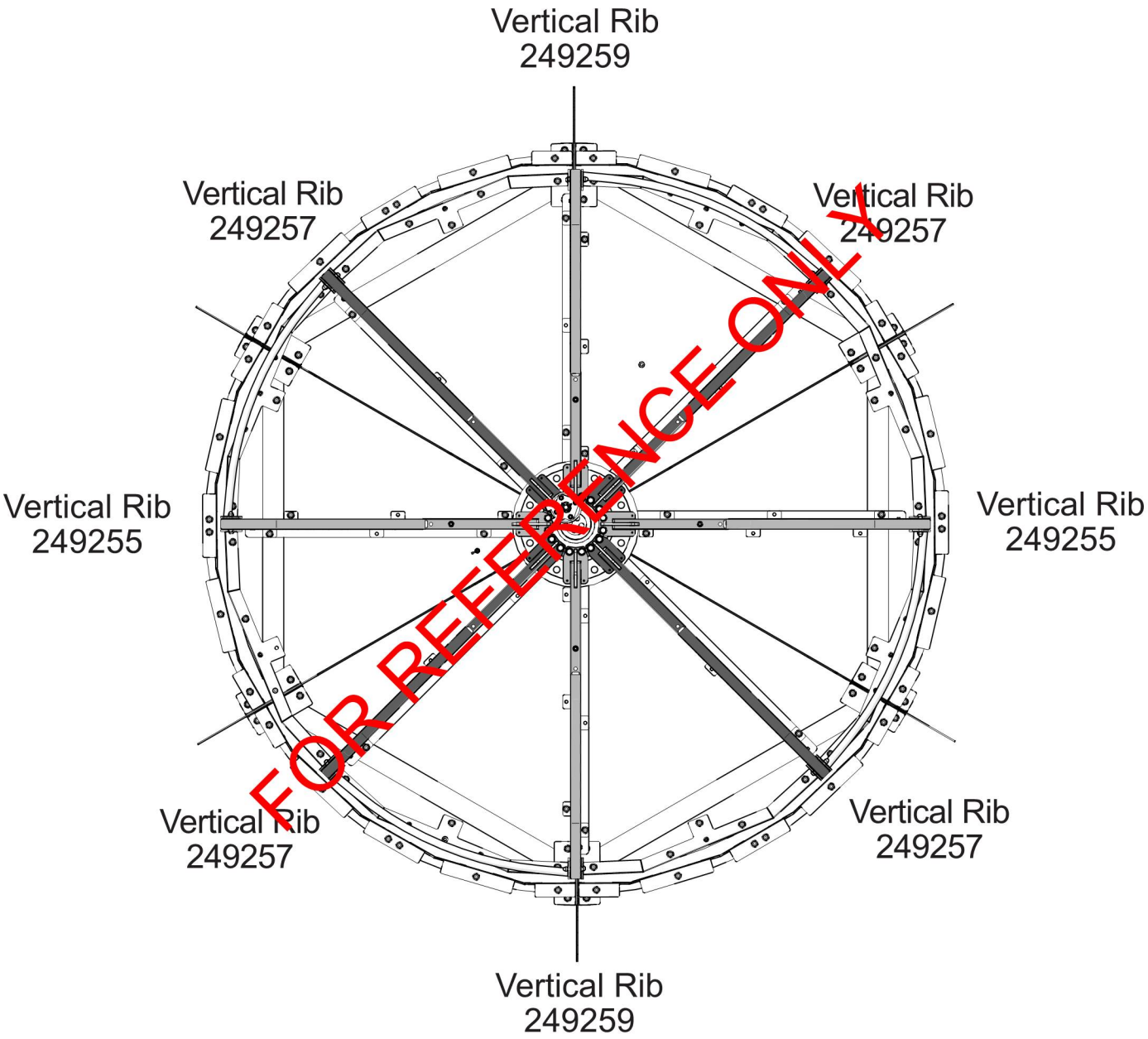

601 7th Street South, Delano, Minnesota 55328-8605 888-574-4678 LSI Install Help 888-438-6574 LSI Direct 763-972-5200 Int. FAX (763) 972-3185
© 2023 by Landscape Structures. All rights reserved

landscape structures®

STEP 3

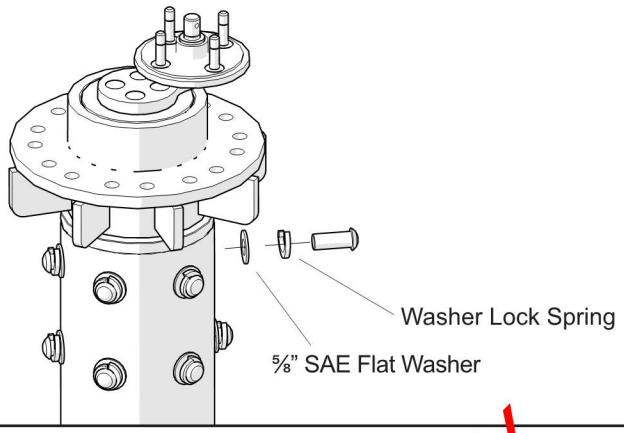

1x	1.25 Offset Bearing and Hub Assembly (254134)	12x	5/8 x 1 1/2" BHCS (100201)
12x	5/8" SAE Flat Washer (129500)	12x	Washer Lock Spring (175652)

FOR REFERENCE ONLY

STEP 4

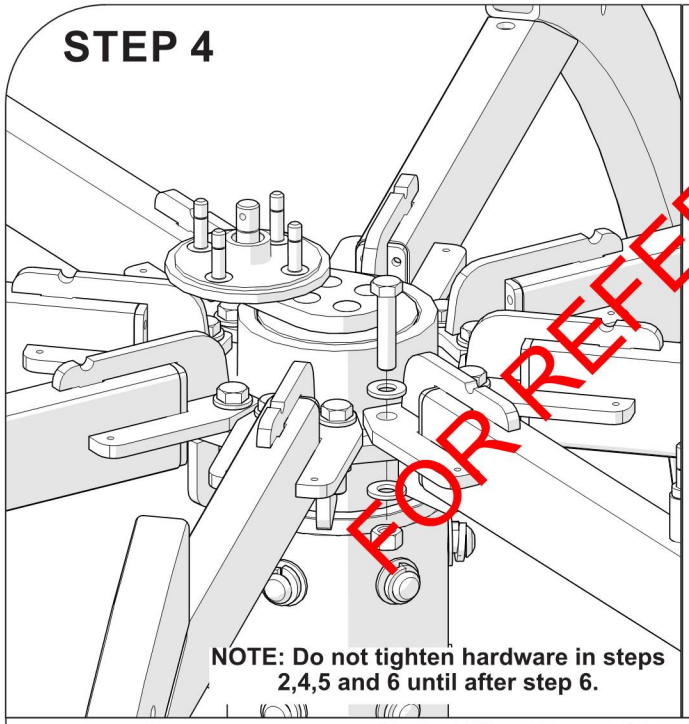

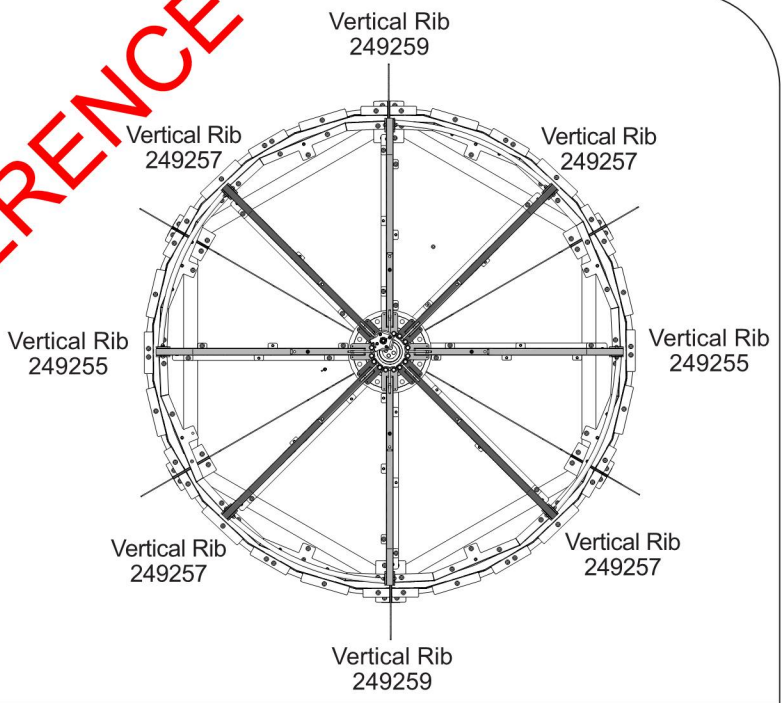

2x	Vertical Rib w/Pin and 1 Insert (249259)	16x	1/2" Standard Hex Nut (129692)
4x	Vertical Rib w/o Pin and 1 Insert (249257)	16x	½" x 2 ¼" Hex Screw (131862)
2x	Vertical Rib w/Pin and 4 Inserts (249255)	32x	1/2" SAE Washer (113550)

601 7th Street South, Delano, Minnesota 55328-8605 888-574-4678 LSI Install Help 888-438-6574 LSI Direct 763-972-5200 Int. FAX (763) 972-3185
© 2023 by Landscape Structures. All rights reserved

landscape structures®

STEP 5

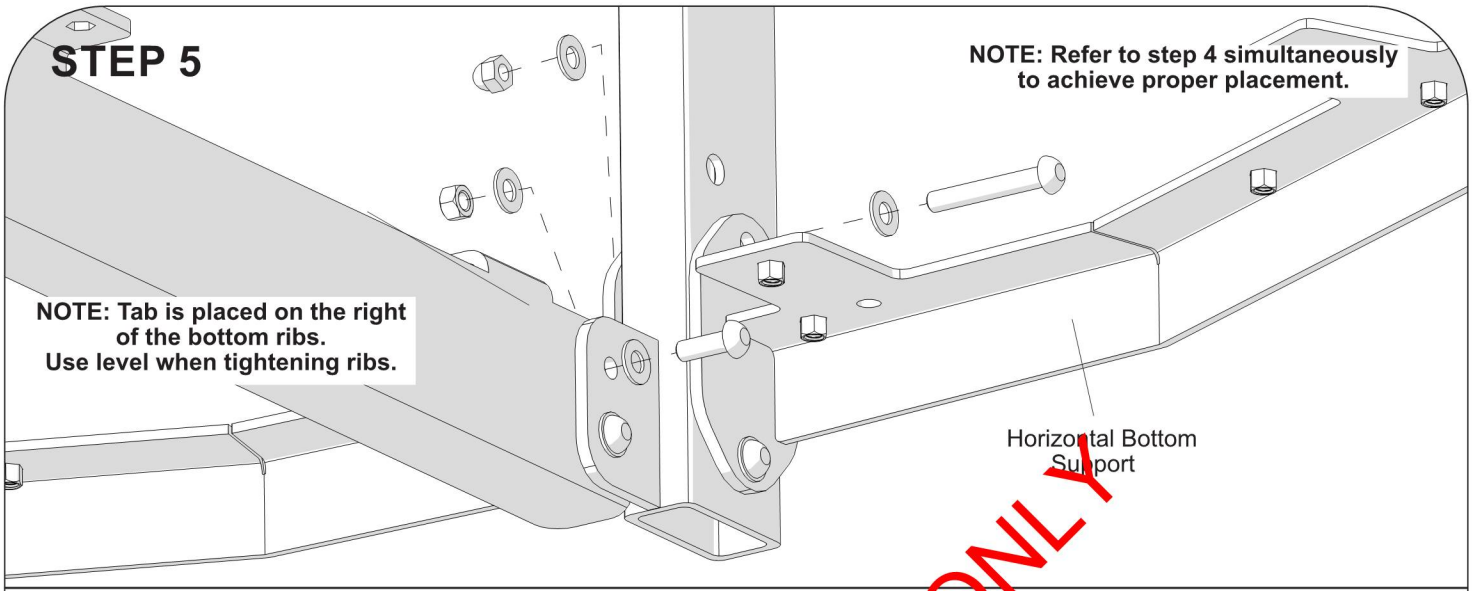

8x	Horizontal Bottom Support (249286)	16x	3/8" Standard Hex Nut (100327)
16x	3/8" Low Crown Hex Nut (100349)	64x	3/8" SAE Washer (100365)
16x	3/8 x 2 1/2" BHCS (100174)	16x	3/8 x 1 1/8" BHCS (100198)

FOR REFERENCE ONLY

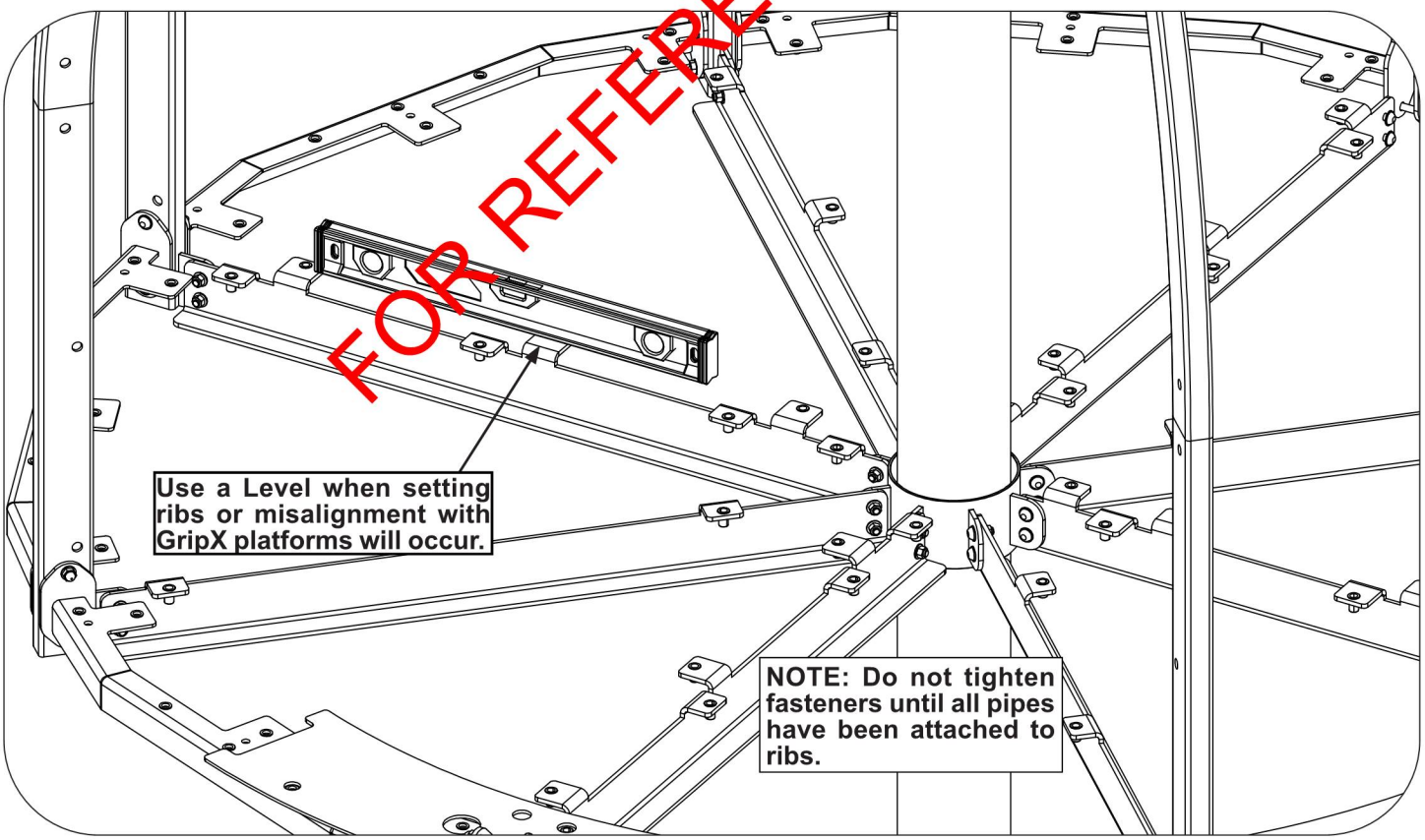

601 7th Street South, Delano, Minnesota 55328-8605 888-574-4678 LSI Install Help 888-438-6574 LSI Direct 763-972-5200 Int. FAX (763) 972-3185
© 2023 by Landscape Structures. All rights reserved

landscape structures®

STEP 6

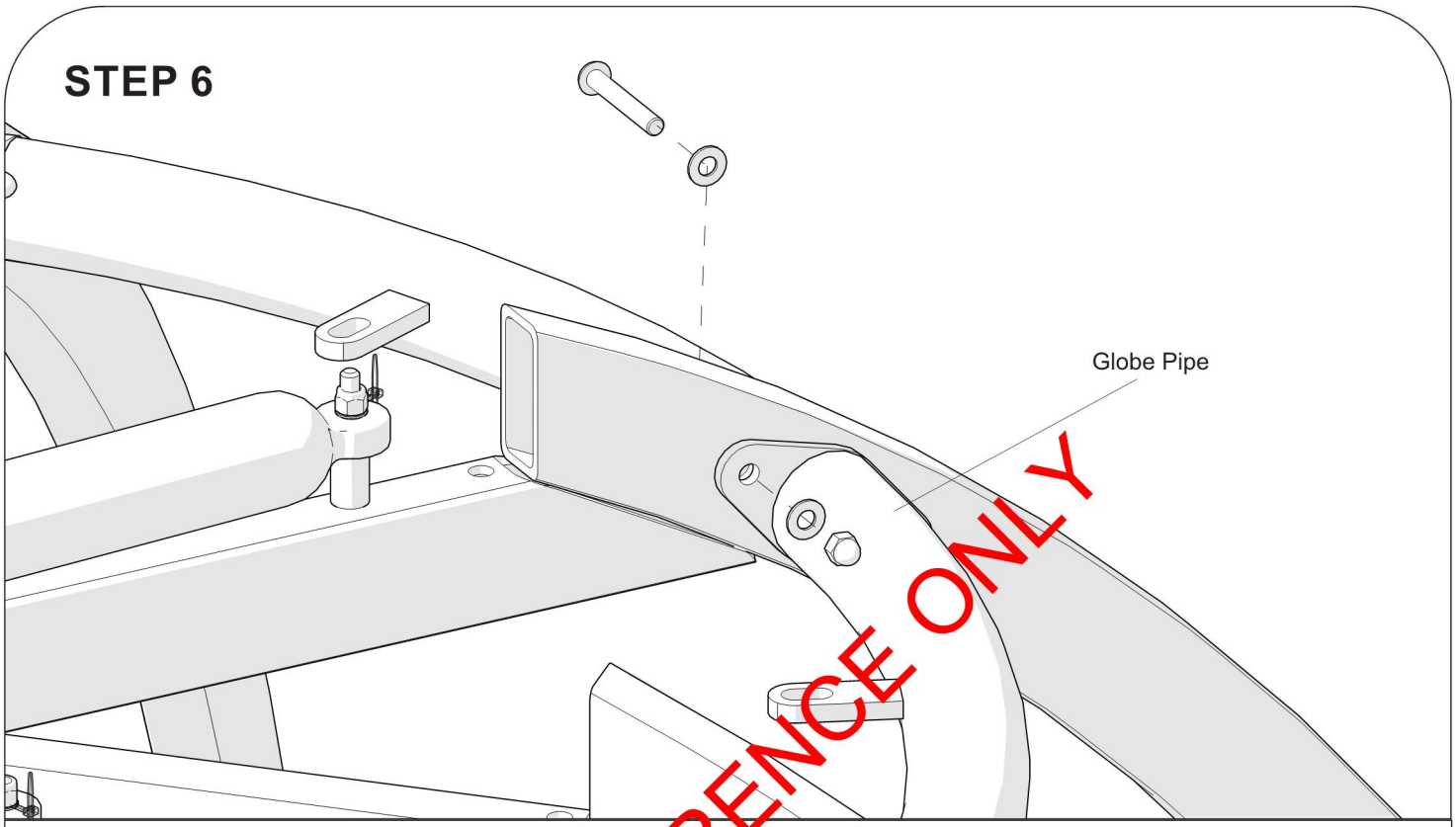

8x	Globe Pipe (212866)	16x	3/8 x 2 1/2" BHCS (100174)
16x	3/8" Low Crown Hex Nut (100349)	32x	3/8" SAE Washer (100365)

FOR REFERENCE ONLY

601 7th Street South, Delano, Minnesota 55328-8605 888-574-4678 LSI Install Help 888-438-6574 LSI Direct 763-972-5200 Int. FAX (763) 972-3185
© 2023 by Landscape Structures. All rights reserved

landscape structures®

STEP 7

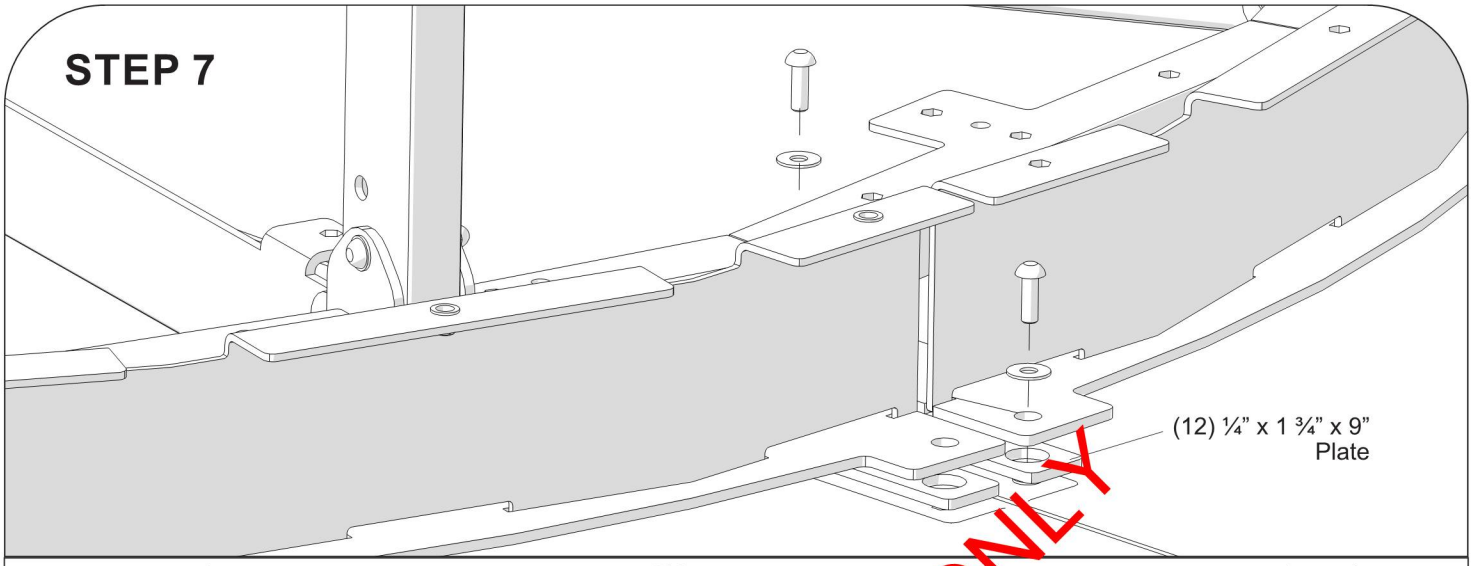

6x	Skirt (249289)	24x	3/8 x 1 1/8" BHCS (100198)
24x	3/8" Flat Washer (100362)	12x	¼" x 1 ¾" x 9" Plate (253792)

FOR REFERENCE ONLY

STEP 8

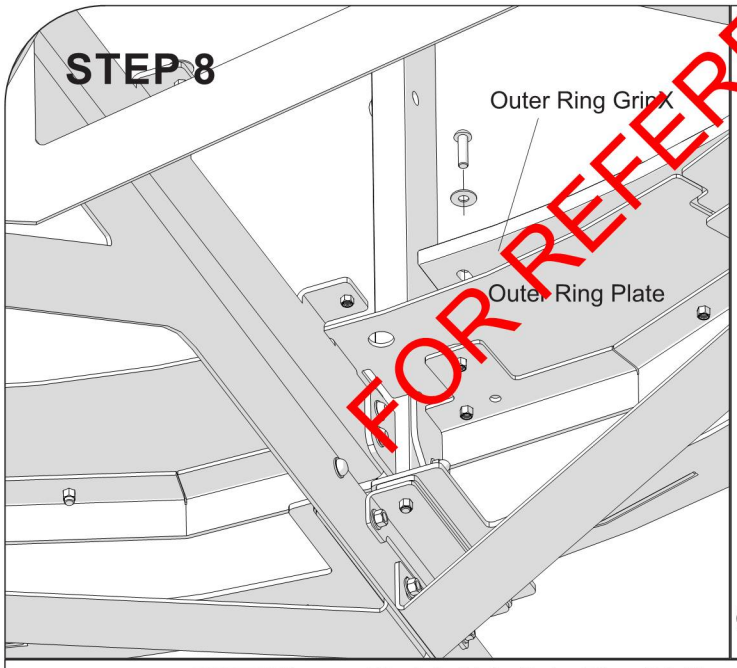

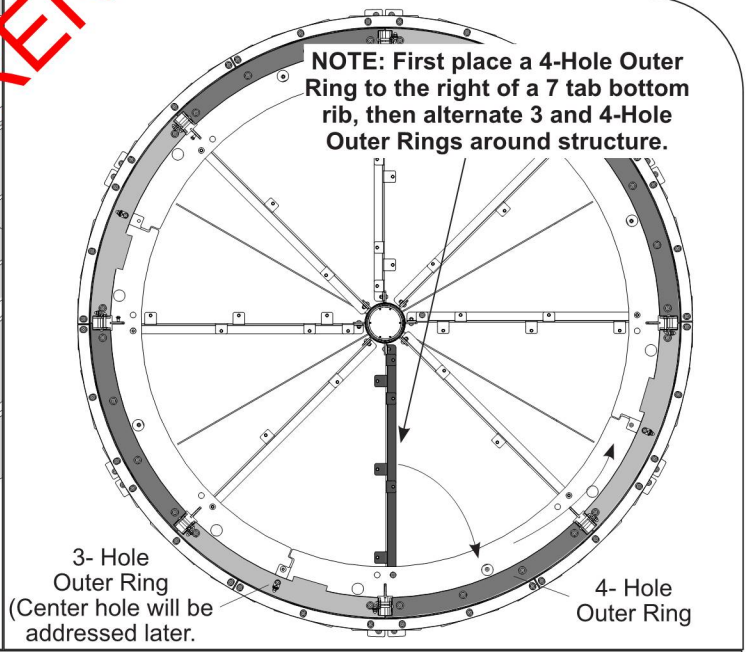

4x	Black 3- Hole Outer Ring GripX (297891)	24x	3/8 x 1 3/8" BHCS (113027)
4x	Black 4 Hole Outer Ring GripX (246441)	24x	3/8" Flat Washer (100362)
4x	Outer Ring Plate (250371)		

601 7th Street South, Delano, Minnesota 55328-8605 888-574-4678 LSI Install Help 888-438-6574 LSI Direct 763-972-5200 Int. FAX (763) 972-3185
© 2023 by Landscape Structures. All rights reserved

landscape structures®

https://bit.ly/2DTsWVh

STEP 9

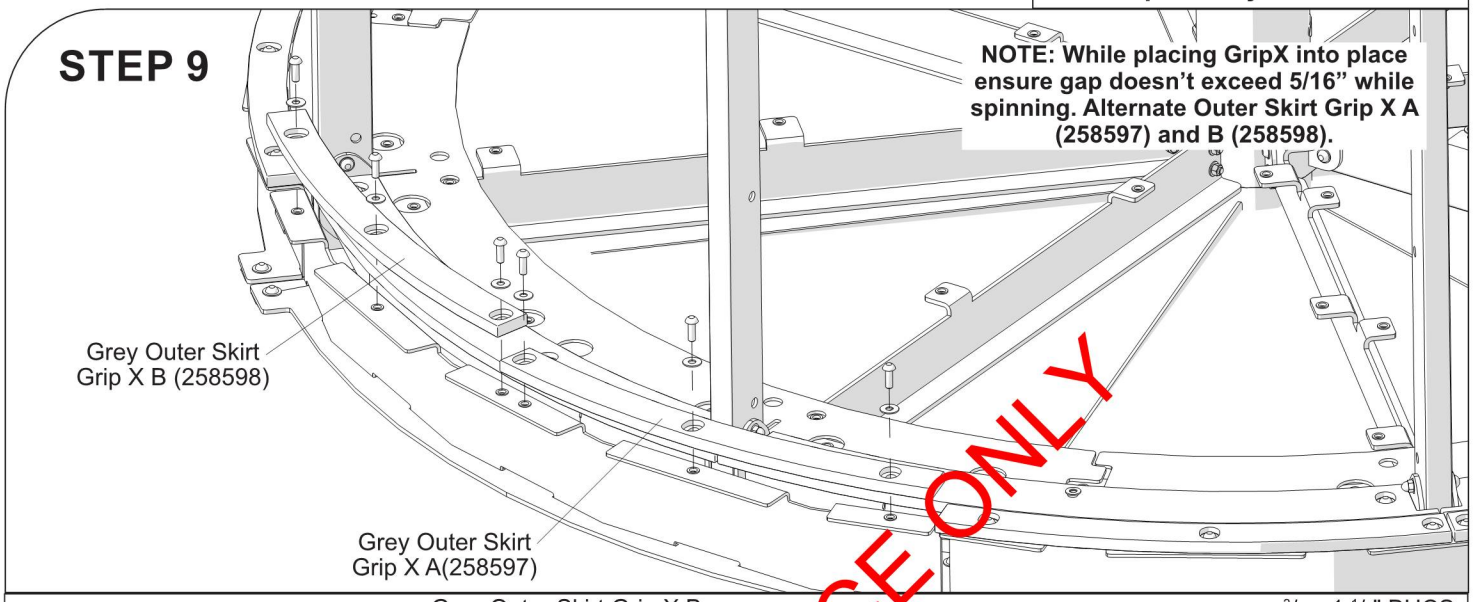

6x	Grey Outer Skirt Grip X B (258598)	36x	3/8 x 1 1/8" BHCS (100198)
6x	Grey Outer Skirt Grip X A (258597)		
36x	3/8" Flat Washer (100362)		

FOR REFERENCE ONLY

STEP 10

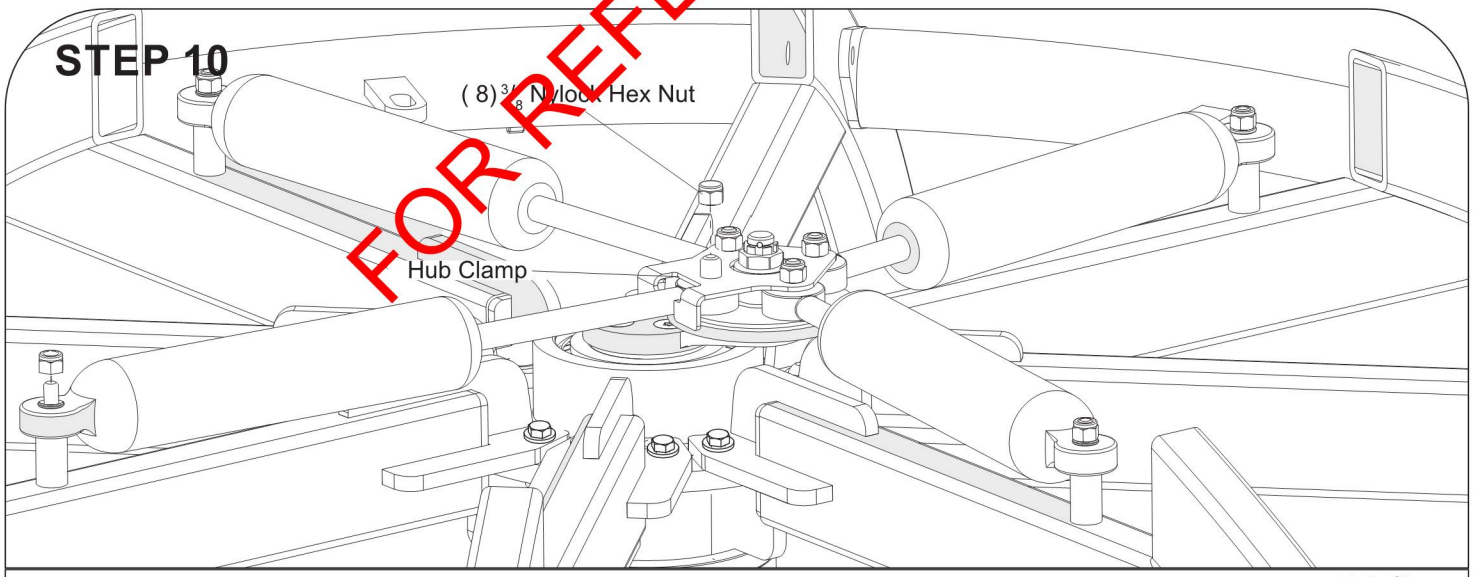

4x	70 Series Shock (215884)	1x	Hub Clamp (222306)
8x	3/8 Nylock Hex Nut (136931)		

601 7th Street South, Delano, Minnesota 55328-8605 888-574-4678 LSI Install Help 888-438-6574 LSI Direct 763-972-5200 Int. FAX (763) 972-3185
© 2023 by Landscape Structures. All rights reserved

landscape structures®

INTERIOR I

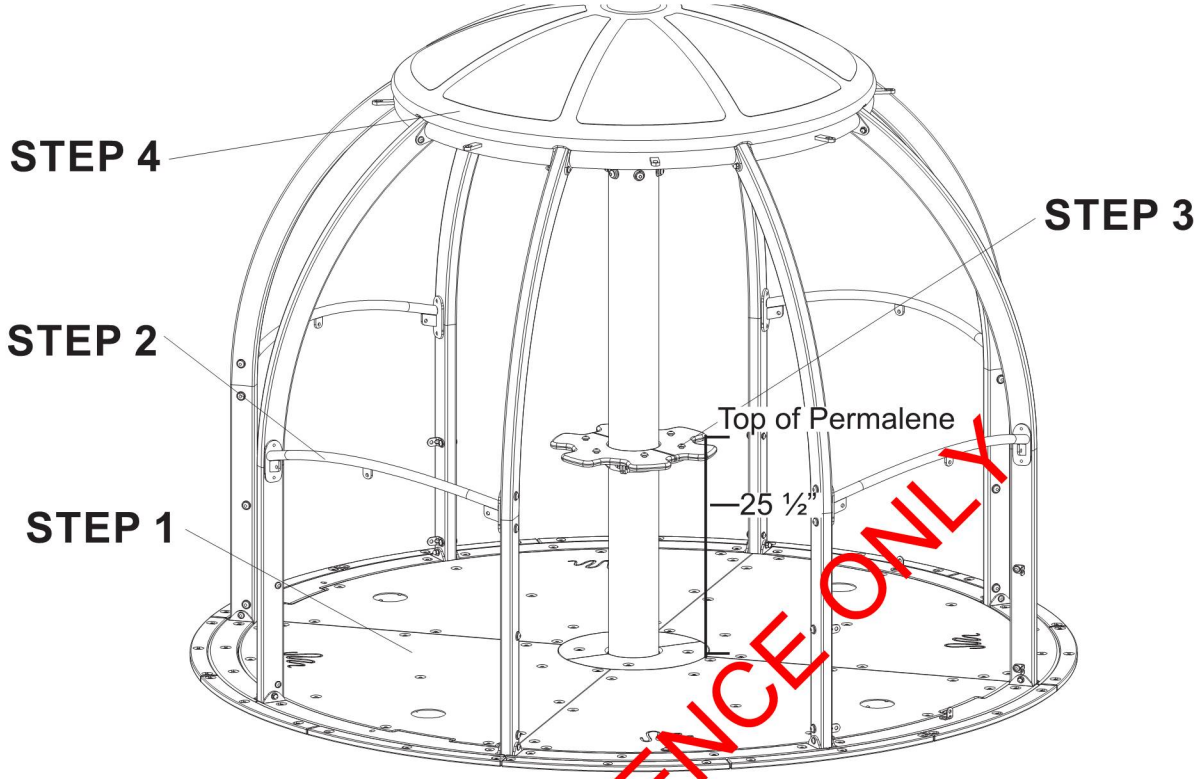

FOR REFERENCE ONLY

STEP 1

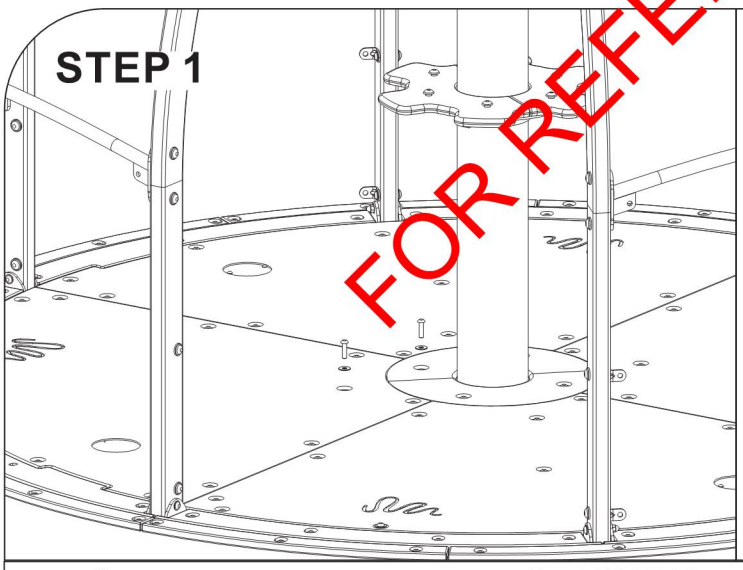

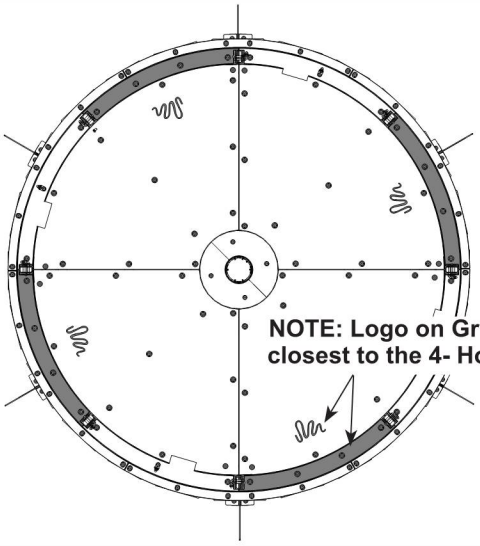

56x	$^{3}/_{8}$ x 1 $^{3}/_{8}$" BHCS (113027)	4x	Black Outer Deck GripX (297889)
56x	$^{3}/_{8}$" Flat Washer (100362)	2x	Black Center Deck GripX (246435)

601 7th Street South, Delano, Minnesota 55328-8605 888-574-4678 LSI Install Help 888-438-6574 LSI Direct 763-972-5200 Int. FAX (763) 972-3185
© 2023 by Landscape Structures. All rights reserved

landscape structures®

STEP 2

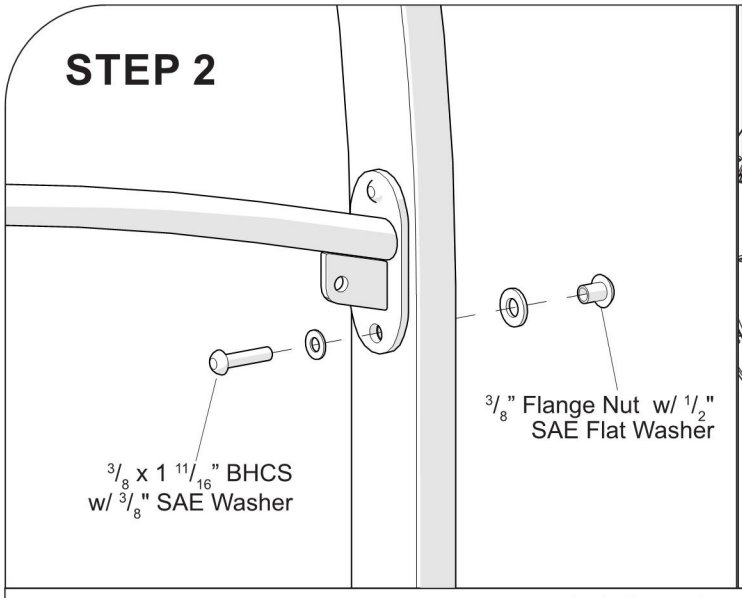

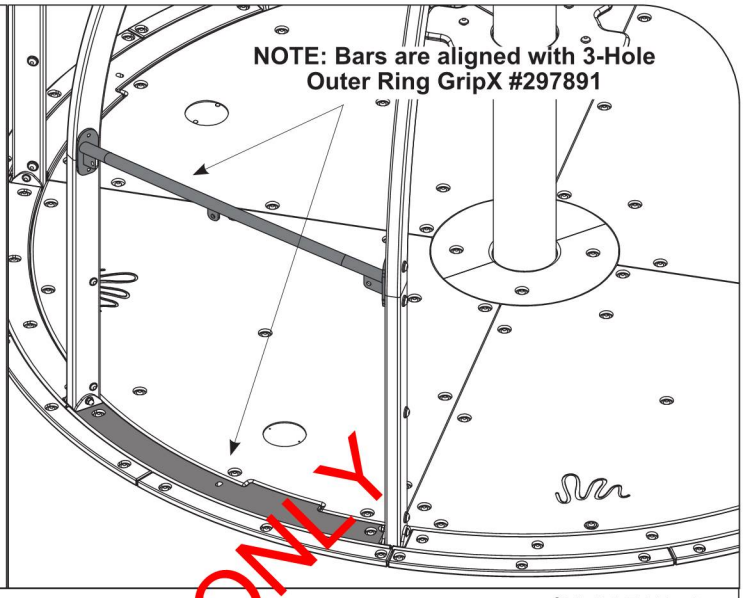

4x	Arch Support (249265)	16x	3/8" SAE Washer (100365)
16x	3/8 x 1 11/16" BHCS (123224)	16x	3/8" Flange Nut (100353)
16x	1/2" SAE Flat Washer (113550)		

FOR REFERENCE ONLY

STEP 3

NOTE: Clamp placement on Page 17

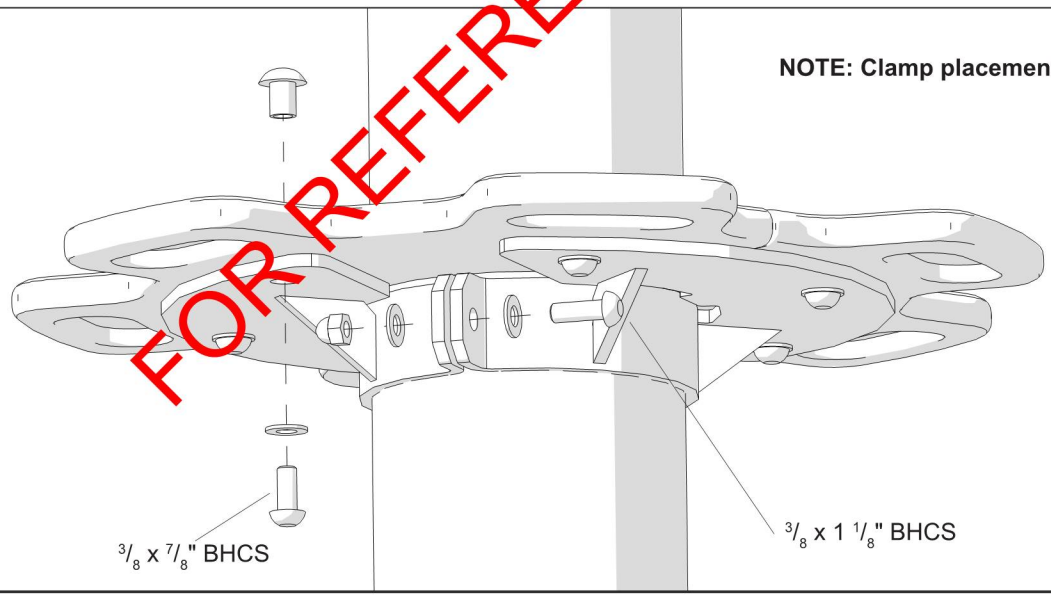

2x	Center Post Ring Weldment (249268)	10x	3/8" SAE Washer (100365)
2x	Center Ring Permalene (246424)	2x	3/8" Low Crown Hex Nut (100349)
2x	3/8 x1 1/8" BHCS (100198)	6x	3/8" Flange Nut (100353)
6x	3/8 x 7/8" BHCS (100196)		

601 7th Street South, Delano, Minnesota 55328-8605 888-574-4678 LSI Install Help 888-438-6574 LSI Direct 763-972-5200 Int. FAX (763) 972-3185
© 2023 by Landscape Structures. All rights reserved

landscape structures®

STEP 4

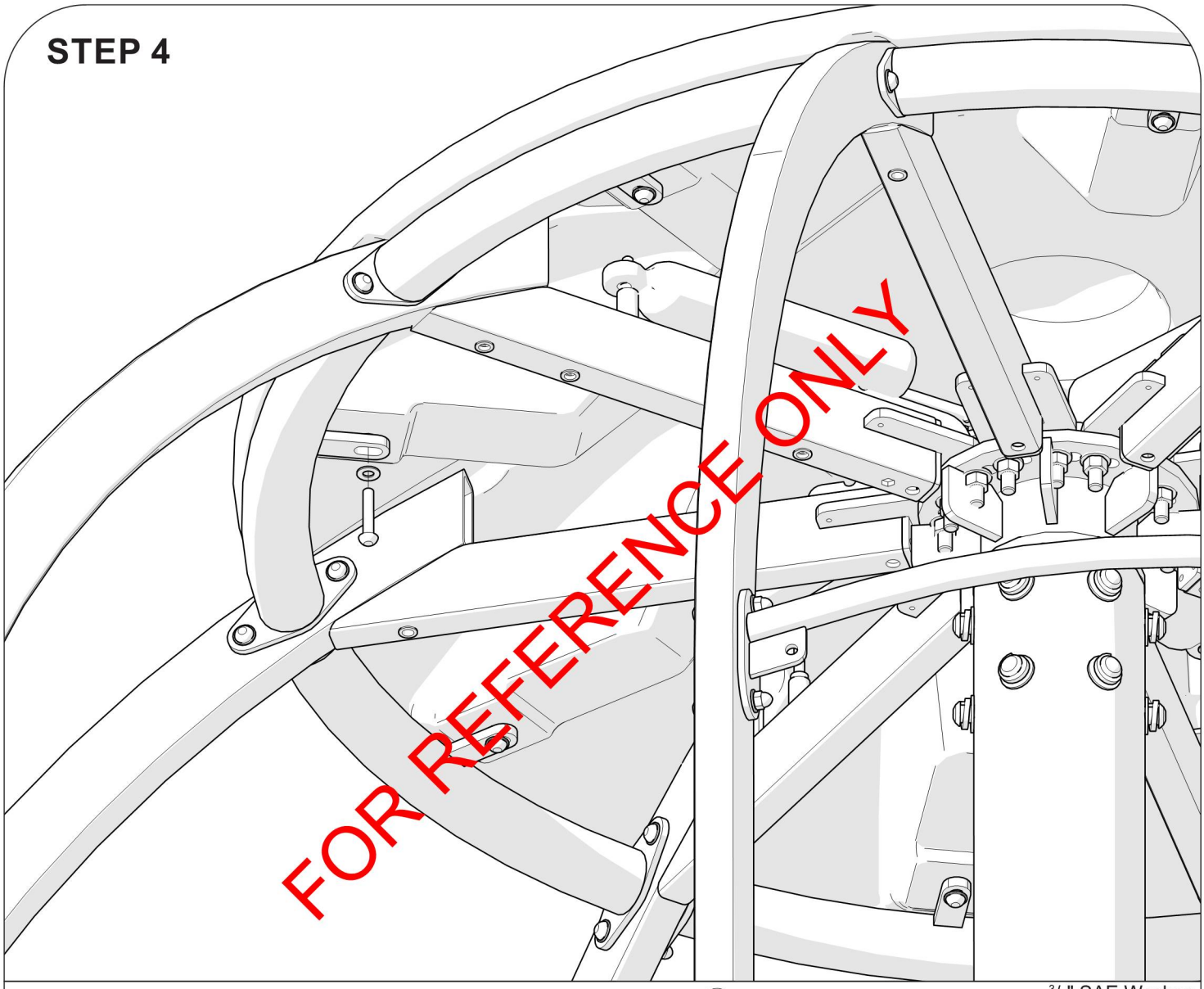

8x	3/8 x 2" BHCS (100173)	8x	3/8" SAE Washer (100365)
1x	Spinner Top (215474)		

601 7th Street South, Delano, Minnesota 55328-8605 888-574-4678 LSI Install Help 888-438-6574 LSI Direct 763-972-5200 Int. FAX (763) 972-3185
© 2023 by Landscape Structures. All rights reserved

landscape structures

NOTE: Document shows quantities for 2 seat configuration. When assembling a 3 seat configuration refer to quantities in the bill of materials.

STEP 2

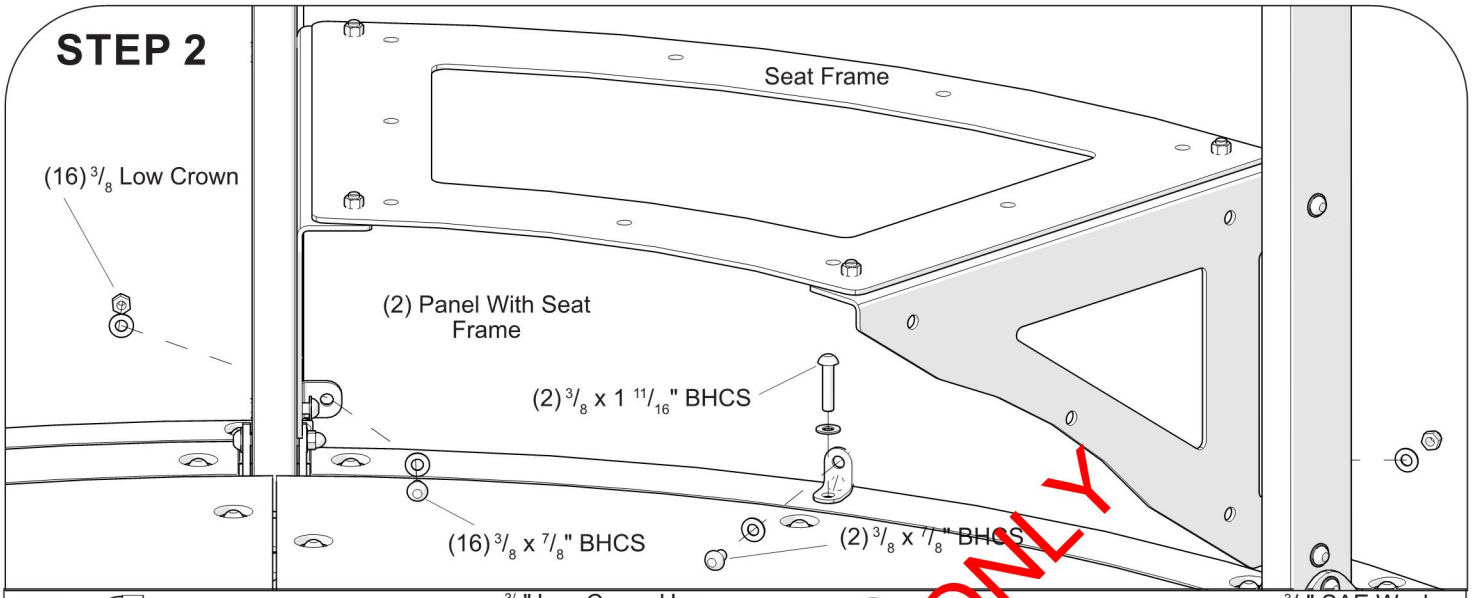

16x	3/8" Low Crown Hex Nut (100349)	34x	3/8" SAE Washer (100365)
16x	3/8 x 7/8" BHCS (100196)	2x	90 Degree Bracket (147807)
2x	3/8 x 1 11/16" BHCS (123224)	2x	Perf Panel (246428)

FOR REFERENCE ONLY

STEP 3

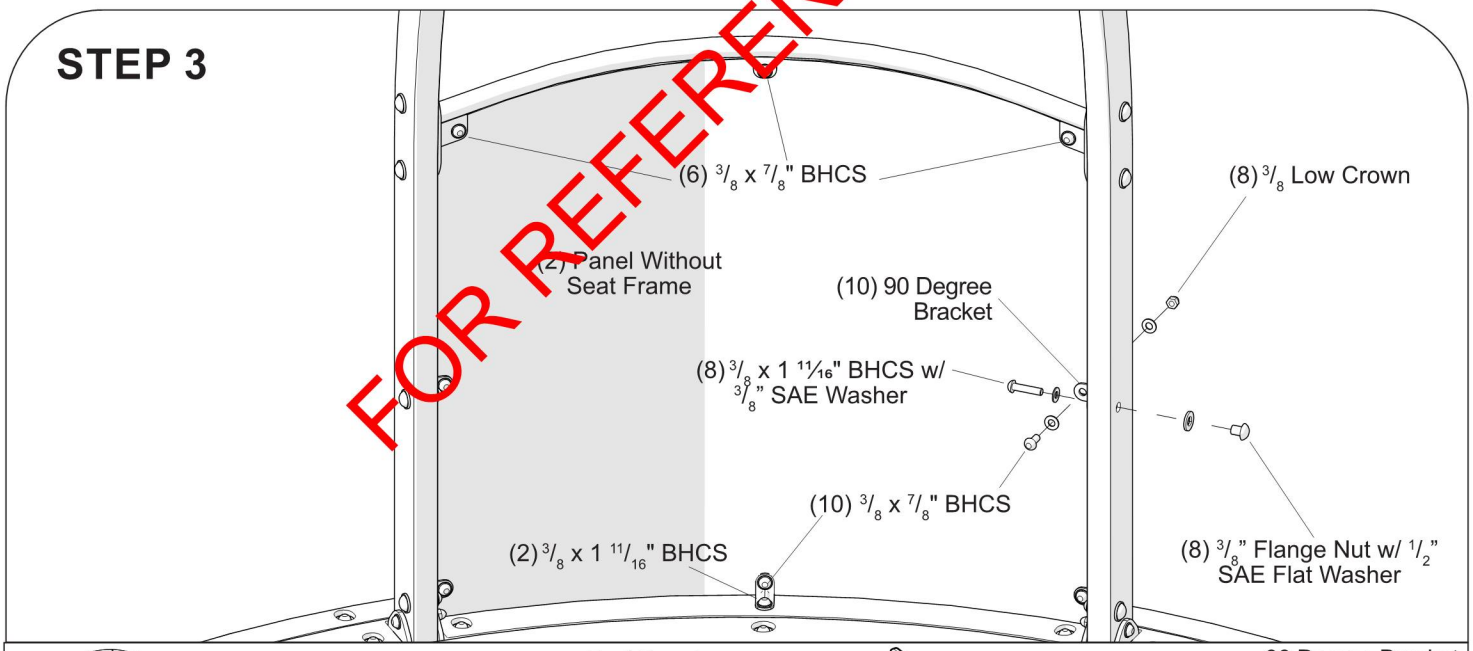

2x	Perf Panel (246428)	10x	90 Degree Bracket (147807)
16x	3/8" Low Crown Hex Nut (100349)	42x	3/8" SAE Washer (100365)
10x	3/8 x 1 11/16" BHCS (123224)	8x	3/8" Flange Nut (100353)
16x	3/8 x 7/8" BHCS (100196)	8x	1/2" SAE Flat Washer (113550)

601 7th Street South, Delano, Minnesota 55328-8605 888-574-4678 LSI Install Help 888-438-6574 LSI Direct 763-972-5200 Int. FAX (763) 972-3185
© 2023 by Landscape Structures. All rights reserved

landscape structures

STEP 4

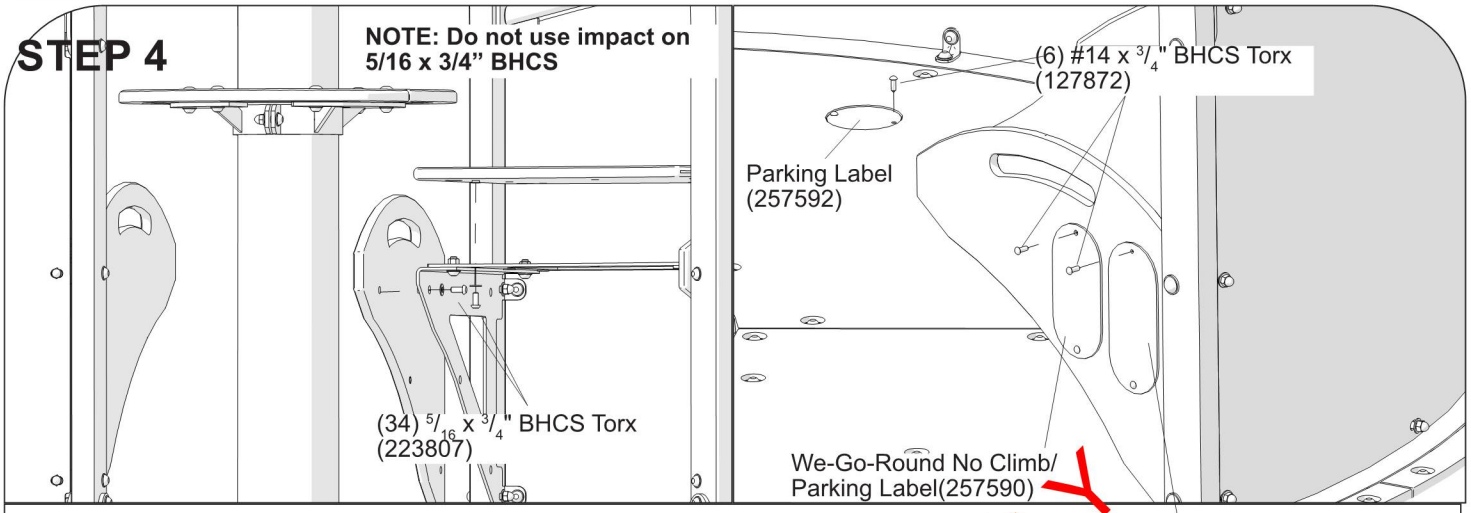

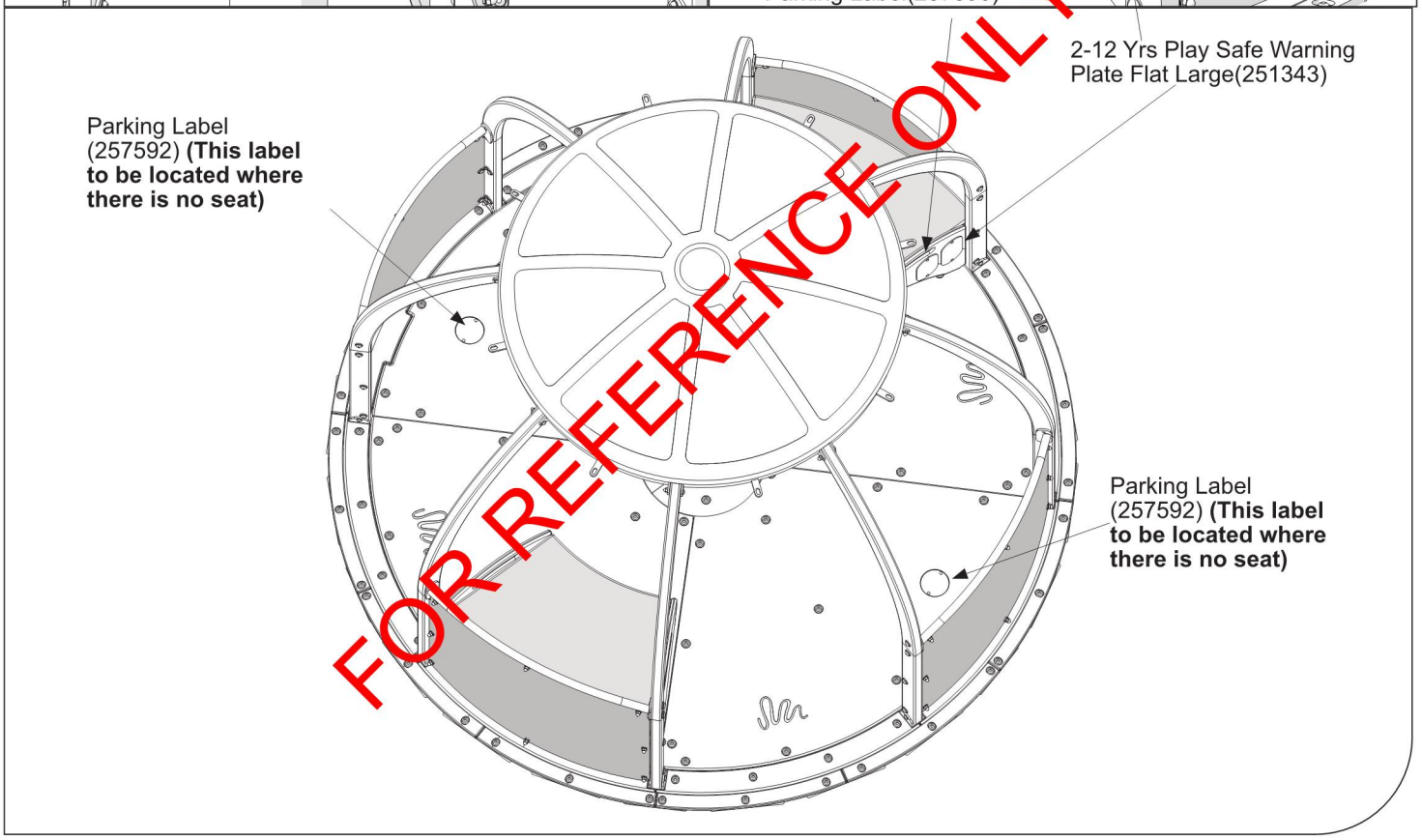

2x	Seat Top (246425)	2x	Seat Panel Right (246427)
2x	Seat Panel Left (246426)	34x	5/16 x 3/4" BHCS Torx (223807)
34x	5/16" SAE Flat Washer (223956)	6x	#14 x 3/4" BHCS Torx (127872)
1x	Parking Label (257592)	1x	2-12 Yrs Play Safe Warning Plate Flat Large (251343)
1x	Warning No Climb/Parking Label (257590)		

601 7th Street South, Delano, Minnesota 55328-8605 888-574-4678 LSI Install Help 888-438-6574 LSI Direct 763-972-5200 Int. FAX (763) 972-3185
© 2023 by Landscape Structures. All rights reserved

landscape structures®

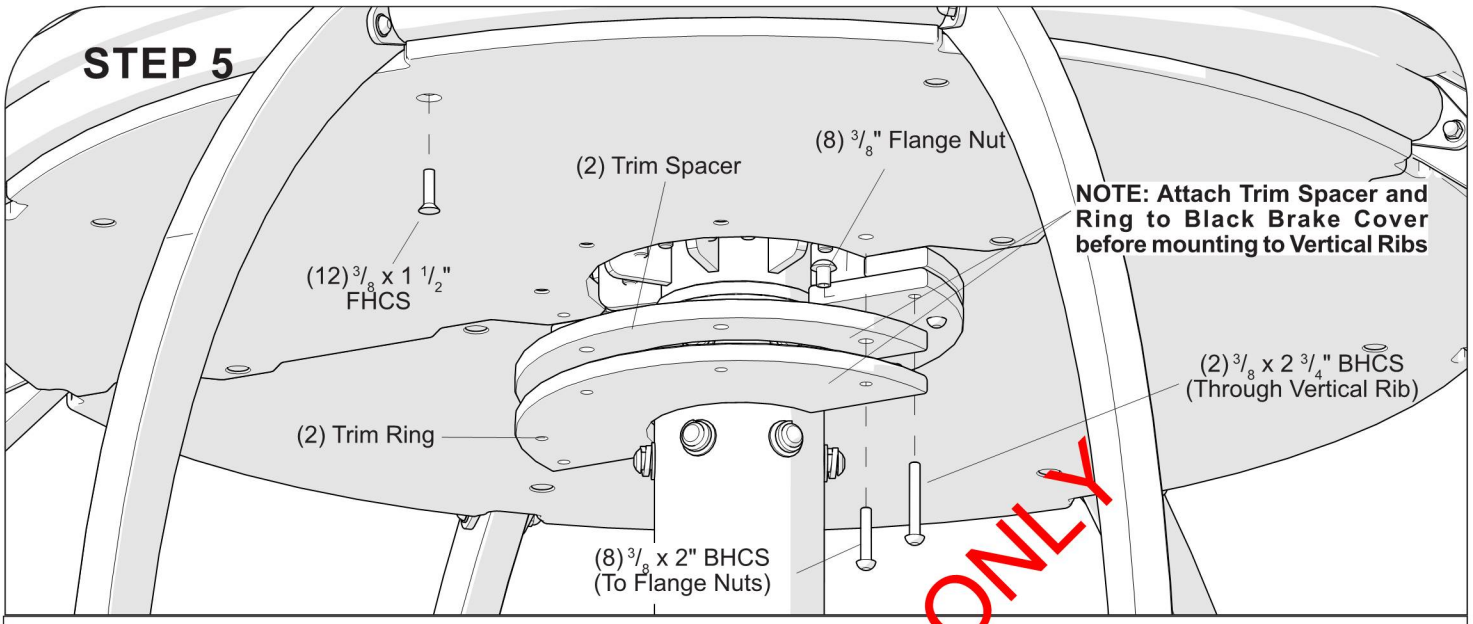

2x	Black Brake Cover (215887)	2x	Trim Ring (218445)
2x	Black Trim Spacer (218444)	8x	3/8 x 2" BHCS (100173)
2x	3/8 x 2 3/4" BHCS (100175)	12x	3/8 x 1 1/2" FHCS (151421)
8x	3/8" Flange Nut (100353)		

FOR REFERENCE ONLY

601 7th Street South, Delano, Minnesota 55328-8605 888-574-4678 LSI Install Help 888-438-6574 LSI Direct 763-972-5200 Int. FAX (763) 972-3185
© 2023 by Landscape Structures. All rights reserved

Parts List - 2 Seat Option

Part#	Description	Qty.
147807	Angle Brkt Pnt, Specify Color	12
292617	Bushing Uhmw 6" Tube	2
212866	Globe Pipe Bottom W/Out Net, Specify Color	8
215474	Globe Spinner Top Roto, Specify Color	1
215887	Globe Brake Cover, Black in Color	2
254134	1.25 Offset Bearing + Hub Asm	1
218444	Trim Spacer Globe, Black in Color	2
218445	Trim Ring Globe, Black in Color	2
222306	Global Motion® Hub Clamp Sst	1
222399	#3 Rebar X 18"	2
246424	Ctr Ring Perm, Specify Color	2
246425	Seat Pnl Top, Specify Color	2
246426	Seat Pnl Lh, Specify Color	2
246427	Seat Pnl Rh, Specify Color	2
297889	Main Deck Gripx, Black in Color	4
246435	Ctr Deck Gripx, Black in Color	2
246441	Otr Ring Perm 4 Hole, Black in Color	4
246442	Seat Frm Rh Pnt, Specify Color	2
246443	Seat Frm Lh Pnt, Specify Color	2
246444	Seat Frm Plt Pnt, Specify Color	2
297891	Otr Ring Perm With Tab Slot, Black in Color	4
258597	Otr Skirt GripX A, Gray in color	6
258598	Otr Skirt GripX B, Gray in color	6
248520	Btm Rib Mnt Machined	1
249255	Vert Rib With Mtg Pin 4 Inserts Pnt, Specify Color	2
249257	Vert Rib Wout Mtg Pin Pnt, Specify Color	4
249259	Vert Rib With Mtg Pin 1 Insert Pnt, Specify Color	2
249265	Arch Pnl Sprt Weldt Pnt, Specify Color	4
249266	7 Flg Btm Rib Pnt, Specify Color	4
249267	3 Flg Btm Rib Pnt, Specify Color	4
249268	Ctr Post Ring Weldt Pnt, Specify Color	2
289361	6.0 OD x .25 x 119.5" Zp Post Pnt, Specify Color	1
249286	Horiz Btm Sprt Weldt Pnt, Specify Color	8
249289	Otr Skirt Weldt Pnt, Specify Color	6
249292	Rib Clmp, Install Weldt Pnt, Specify Color	4
249295	Rib, Install Pnt, Specify Color	6
249297	Rib Ftr, Install Pnt, Specify Color	6
249299	Rib Brkt, Install Pnt, Specify Color	12
250371	Otr Ring Plt Pnt, Specify Color	4
250643	4" X 300" Perf Drain Pipe	1
250644	4" Flexible Drain Tee	1
250645	4" Drain Cap	2
251007	4" Drain Coupler	2
215884	70 Series Shock	4
*	DigiFuse Panels (Refer to Interior II, Pg. 17)	4
253792	9" Plate Pnt, Specify Color	12
XXXXXX	Custom Artwork Panel	*
254468	Bushing Belt , Black	1

250568	**Hdw Pkg We-Go-Round Rib Plates Asm**	**1**
100206	Hex Cap 3/8X1i Sst Pat	36
100208	Hex Cap 3/8X1-1/2 Sst Pat	4
100327	Nut Hex Std 3/8-16 Sst	40
100365	Washer Flat Sae 3/8I Sst	82
100610	Rivet 1/4X5/8I Drv As	2
168198	Lag Scr Bh 6Lp 3/8X1-1/2I	2

253850	**Hdw Pkg We-Go-Round Skirt Asm**	**1**
100198	Bhcs 6Lp 3/8X1-1/8I Sst	60
100362	Washer Flat 3/8I Sst	60

289338	**Hdw Pkg We-Go-Round Hub/Bushings**	**1**
100201	Bhcs 6Lp 5/8X1-1/2I Sst	12
100611	Rivet 1/4X3/8I Drv As	12
109680	Cable Tie 5-3/4I Black	1
129500	Washer Flat Sae 5/8I Sst	12
136931	Nut Hex Nylok 3/8-16 Sst	8
175652	Washer Lock Spring 5/8I Sst	12

250580	**Hdw Pkg We-Go-Round Frame Asm**	**1**
100174	Bhcs 6Lp 3/8X2-1/2Isstpat	32
100198	Bhcs 6Lp 3/8X1-1/8I Sst	32
100327	Nut Hex Std 3/8-16 Sst	32
100349	Nut L/C Cap 3/8-16 Sst	32
100365	Washer Flat Sae 3/8I Sst	128
113550	Washer Flat Sae 1/2I Sst	32
129692	Nut Hex Std 1/2-13 Sstpat	16
131862	Hex Cap 1/2X2-1/4 Sst	16

250586	**Hdw Pkg We-Go-Round Brake Cover**	**1**
100173	Bhcs 6Lp 3/8X2i Sst Pat	16
100175	Bhcs 6Lp 3/8X2-3/4I Sst	2
100353	Flg Nut 6Lp 3/8-16 Sst	8
100365	Washer Flat Sae 3/8I Sst	8
151421	Fhcs 6Lp 3/8X1-1/2Isst W/Patch	12

250587	**Hdw Pkg We-Go-Round Perf Panel W/O Seat**	**2**
100196	Bhcs 6Lp 3/8X7/8I Sst	8
100349	Nut L/C Cap 3/8-16 Sst	8
100353	Flg Nut 6Lp 3/8-16 Sst	8
100365	Washer Flat Sae 3/8I Sst	25
113550	Washer Flat Sae 1/2I Sst	8
123224	Bhcs 6Lp 3/8X1-11/16I Sst	9

293793	**Hdw Pkg We-Go-Round Perf Panel W/Seat**	**2**
100196	Bhcs 6Lp 3/8X7/8I Sst	12
100327	Nut Hex Std 3/8-16 Sst	4
100349	Nut L/C Cap 3/8-16 Sst	8
100353	Flg Nut 6Lp 3/8-16 Sst	8
100365	Washer Flat Sae 3/8I Sst	33
113550	Washer Flat Sae 1/2I Sst	8
123224	Bhcs 6Lp 3/8X1-11/16I Sst	9
223807	Bhcs 6Lp 5/16I -18 X 3/4I Sst	17
223956	Washer Flat Sae 5/16I Sst	17

258581	**Hdw Pkg We-Go-Round Decking**	**1**
100362	Washer Flat 3/8I Sst	80
113027	Bhcs 6Lp 3/8X1-3/8I Sst	80

250590	**Hdw Pkg We-Go-Round Center Ring**	**1**
100196	Bhcs 6Lp 3/8X7/8I Sst	6
100198	Bhcs 6Lp 3/8X1-1/8I Sst	2
100349	Nut L/C Cap 3/8-16 Sst	2
100353	Flg Nut 6Lp 3/8-16 Sst	6
100365	Washer Flat Sae 3/8I Sst	10

258556	**Hdw Pkg We-Go-Round Labels**	**1**
127463	Bit Hex Tpp T27 (Torx)	1
127872	Bhcs Torx #14 X 3/4 Sst Thread Type Ab	8
251343	2-12 Yrs Play Safe Warning Plate Flat Large	1
257590	No Climb/Parking Plate	1
257592	Parking Plate	2

DB = Direct Bury

FOR REFERENCE ONLY

landscape structures

Kids In Motion

249558 We-Go-Round™ w/Di

Parts List - 3 Seat Option

Part#	Description	Qty.
147807	Angle Brkt Pnt, Specify Color	8
292617	Bushing Uhmw 6" Tube	2
212866	Globe Pipe Bottom W/Out Net, Specify Color	8
215474	Globe Spinner Top Roto, Specify Color	1
215887	Globe Brake Cover, Black in Color	2
254134	1.25 Offset Bearing + Hub Asm	1
218444	Trim Spacer Globe, Black in Color	2
218445	Trim Ring Globe, Black in Color	2
222306	Global Motion® Hub Clamp Sst	1
222399	#3 Rebar X 18"	2
246424	Ctr Ring Perm, Specify Color	2
246425	Seat Pnl Top, Specify Color	3
246426	Seat Pnl Lh, Specify Color	3
246427	Seat Pnl Rh, Specify Color	3
297889	Main Deck Gripx, Black in Color	4
246435	Ctr Deck Gripx, Black in Color	2
246441	Otr Ring Perm 4 Hole, Black in Color	4
246442	Seat Frm Rh Pnt, Specify Color	3
246443	Seat Frm Lh Pnt, Specify Color	3
246444	Seat Frm Plt Pnt, Specify Color	3
297891	Otr Ring Perm With Tab Slot, Black in Color	4
258597	Otr Skirt GripX A, Gray in color	6
258598	Otr Skirt GripX B, Gray in color	6
248520	Btm Rib Mnt Machined	1
249255	Vert Rib With Mtg Pin 4 Inserts Pnt, Specify Color	2
249257	Vert Rib Wout Mtg Pin Pnt, Specify Color	4
249259	Vert Rib With Mtg Pin 1 Insert Pnt, Specify Color	2
249265	Arch Pnl Sprt Weldt Pnt, Specify Color	4
249266	7 Flg Btm Rib Pnt, Specify Color	4
249267	3 Flg Btm Rib Pnt, Specify Color	4
249268	Ctr Post Ring Weldt Pnt, Specify Color	1
289361	6.0 OD x .25 x 119.5" ZP Post Pnt, Specify Color	1
249286	Horiz Btm Sprt Weldt Pnt, Specify Color	8
249289	Otr Skirt Weldt Pnt, Specify Color	6
249292	Rib Clmp, Install Weldt Pnt, Specify Color	4
249295	Rib, Install Pnt, Specify Color	6
249297	Rib Ftr, Install Pnt, Specify Color	6
249299	Rib Brkt, Install Pnt, Specify Color	12
250371	Otr Ring Plt Pnt, Specify Color	4
215884	70 Series Shock	4
250643	4" x 300" Perf Drain Pipe	1
250644	4" Flexible Drain Tube	1
250645	4" Drain Cap	2
251007	4" Drain Coupler	2
*	DigiFuse Panels (Refer to Interior II, Pg. 17)	4
253792	9" Plate Pnt, Specify Color	12
XXXXXX	Custom Artwork Panel	*
254468	Bushing Belt, Black	1

250568	**Hdw Pkg We-Go-Round Rib Plates Asm**	**1**
100206	Hex Cap 3/8X1i Sst Pat	36
100208	Hex Cap 3/8X1-1/2 Sst Pat	4
100327	Nut Hex Std 3/8-16 Sst	40
100365	Washer Flat Sae 3/8I Sst	82
100610	Rivet 1/4X5/8I Drv As	2
168198	Lag Scr Bh 6Lp 3/8X1-1/2I	2

253850	**Hdw Pkg We-Go-Round Skirt Asm**	**1**
100198	Bhcs 6Lp 3/8X1-1/8I Sst	60
100362	Washer Flat 3/8I Sst	60

289338	**Hdw Pkg We-Go-Round Hub/Bushings**	**1**
100201	Bhcs 6Lp 5/8X1-1/2I Sst	12
100611	Rivet 1/4X3/8I Drv As	12
109680	Cable Tie 5-3/4I Black	1
129500	Washer Flat Sae 5/8I Sst	12
136931	Nut Hex Nylok 3/8-16 Sst	8
175652	Washer Lock Spring 5/8I Sst	12

250580	**Hdw Pkg We-Go-Round Frame Asm**	**1**
100174	Bhcs 6Lp 3/8X2-1/2Isstpat	32
100198	Bhcs 6Lp 3/8X1-1/8I Sst	32
100327	Nut Hex Std 3/8-16 Sst	32
100349	Nut L/C Cap 3/8-16 Sst	32
100365	Washer Flat Sae 3/8I Sst	128
113550	Washer Flat Sae 1/2I Sst	32
129692	Nut Hex Std 1/2-13 Sstpat	16
131862	Hex Cap 1/2X2-1/4 Sst	16

250586	**Hdw Pkg We-Go-Round Brake Cover**	**1**
100173	Bhcs 6Lp 3/8X2 Sst Pat	16
100175	Bhcs 6Lp 3/8X2-3/4I Sst	2
100353	Flg Nut 6Lp 3/8-16 Sst	8
100365	Washer Flat Sae 3/8I Sst	8
151421	Bhcs 6Lp 3/8X1-1/2Isst W/Patch	12

250587	**Hdw Pkg We-Go-Round Perf Panel W/O Seat**	**1**
100196	Bhcs 6Lp 3/8X7/8I Sst	8
100349	Nut L/C Cap 3/8-16 Sst	8
100353	Flg Nut 6Lp 3/8-16 Sst	8
100365	Washer Flat Sae 3/8I Sst	25
113550	Washer Flat Sae 1/2I Sst	8
123224	Bhcs 6Lp 3/8X1-11/16I Sst	9

293793	**Hdw Pkg We-Go-Round Perf Panel W/Seat**	**3**
100196	Bhcs 6Lp 3/8X7/8I Sst	12
100327	Nut Hex Std 3/8-16 Sst	4
100349	Nut L/C Cap 3/8-16 Sst	8
100353	Flg Nut 6Lp 3/8-16 Sst	8
100365	Washer Flat Sae 3/8I Sst	33
113550	Washer Flat Sae 1/2I Sst	8
123224	Bhcs 6Lp 3/8X1-11/16I Sst	9
223807	Bhcs 6Lp 5/16I -18 X 3/4I Sst	17
223956	Washer Flat Sae 5/16I Sst	17

258581	**Hdw Pkg We-Go-Round Decking**	**1**
100362	Washer Flat 3/8I Sst	80
113027	Bhcs 6Lp 3/8X1-3/8I Sst	80

250590	**Hdw Pkg We-Go-Round Center Ring**	**1**
100196	Bhcs 6Lp 3/8X7/8I Sst	6
100198	Bhcs 6Lp 3/8X1-1/8I Sst	2
100349	Nut L/C Cap 3/8-16 Sst	2
100353	Flg Nut 6Lp 3/8-16 Sst	6
100365	Washer Flat Sae 3/8I Sst	10

258558	**Hdw Pkg We-Go-Round Labels**	**1**
127463	Bit Hex Tpp T27 (Torx)	1
127872	Bhcs Torx #14 X 3/4 Sst Thread Type Ab	6
251343	2-12 Yrs Play Safe Warning Plate Flat Large	1
257590	No Climb/Parking Plate	1
257592	Parking Plate	1

DB = Direct Bury

FOR REFERENCE ONLY

landscape structures®

Kids In Motion 249558 We-Go-Round™ w/Di

Specifications

Center Post: 6.000” (152 mm) O.D. x (.250”)(6,35 mm) wall HR Black D.O.M. zinc plated steel Tube. Finish: ProShield®, color specified.

Shock: 70 Series.

GripX Platform: 3/4” (19,05 mm) Thick recycled Permalene®, black in color.

Brake Cover: Recycled Permalene, black in color.

Mounting Hub Assembly: Comprised of 1/2” (12,7 mm) thick stainless steel plate, 11 Ga. (.120”)(3,05 mm) stainless steel sheet, steel bearing shaft.

Fasteners: Primary fasteners shall be socketed and pinned tam perproof in design, stainless steel (SST) per ASTM F 879 unless otherwise indicated (see specific product installation/specifications).

Bottom Rib: 7GA. (.179”)(4,54 mm) Thick HRPO steel plate. Finish: ProShield, black in color.

Middle & Bottom Pipe: Weldment comprised of 2.375” (60,32 mm) O.D. RS20 (.095”-.105”)(2,41 mm-2,66 mm) galvanized steel tube, 1/4” (6,35 mm) thick HRPO steel plate and 3/8” (9,52 mm) thick stainless steel tab. Finish: ProShield, color specified.

Base Bushing: Oil-Filled UHMW PE.

Spinner Top: Rotationally molded from U.V. stabilized linear low density polyethylene, color specified.

Rib: Weldment comprised of 1.5” (38, 1 mm) x 3.0” (76, 2 mm) x (.180” (4, 57 mm) wall HRPO steel tube, 3/8” (9, 52 mm) thick stainless steel tab, 3/8” (9, 52 mm) O.D. stainless steel pin. 3/8” (9, 52 mm) thick HRPO steel plate with 1/4” (6, 35 mm) thick HRPO steel plate. Finish: ProShield®, color specified.

Bottom Mount: Weldment comprised of 7.000” (177 mm) O.D. x .188” (4, 77 mm) wall stainless steel tube and 1/4” (6, 35 mm) thick stainless steel plate.

Seat Permalene Panels: 3/4” thick recycled permalene, specify color

Seat Frame: Comprised of 7 GA (.179”) (4, 54 mm) thick HRPO steel plate. Finish: ProShield, specify color

DigiFuse Panel: Made from (.120”) thick aluminum sheet. Dye sublimination printed digital artwork is fused onto the powdercoated substrate.

Drain Pipe : Comprised of 4” x 25’ polypropylene perforated pipe.

Installation Time: **DB** - Approx. 40 person hours

Concrete Req.: **DB** - Approx. 2.07 yards - Square Footer
DB - Approx. 1.5 yards. - If concrete is chosen in Foundation II - Step 4 detail.

Weight: **DB 2 Seat** - 2107 lbs.
DB 3 Seat - 2165 lbs.

Minimum Area Req.: **DB -** 20’ 10” (6.35 m)

Fall Height: **DB** - 40”

FOR REFERENCE ONLY

ECO-0102464 Document 33197100 replaces 29912200. Added visuals to aid in leveling

landscape structures®

ISO 14001 CERTIFIED

ISO 9001 Certified

SAFETY N

Choose a protective surf[illegible] has a Critical Height Value of at least the height of the Highest Accessible Part/Fall Height of the adjacent equipment. (Ref. ASTM F1487.)

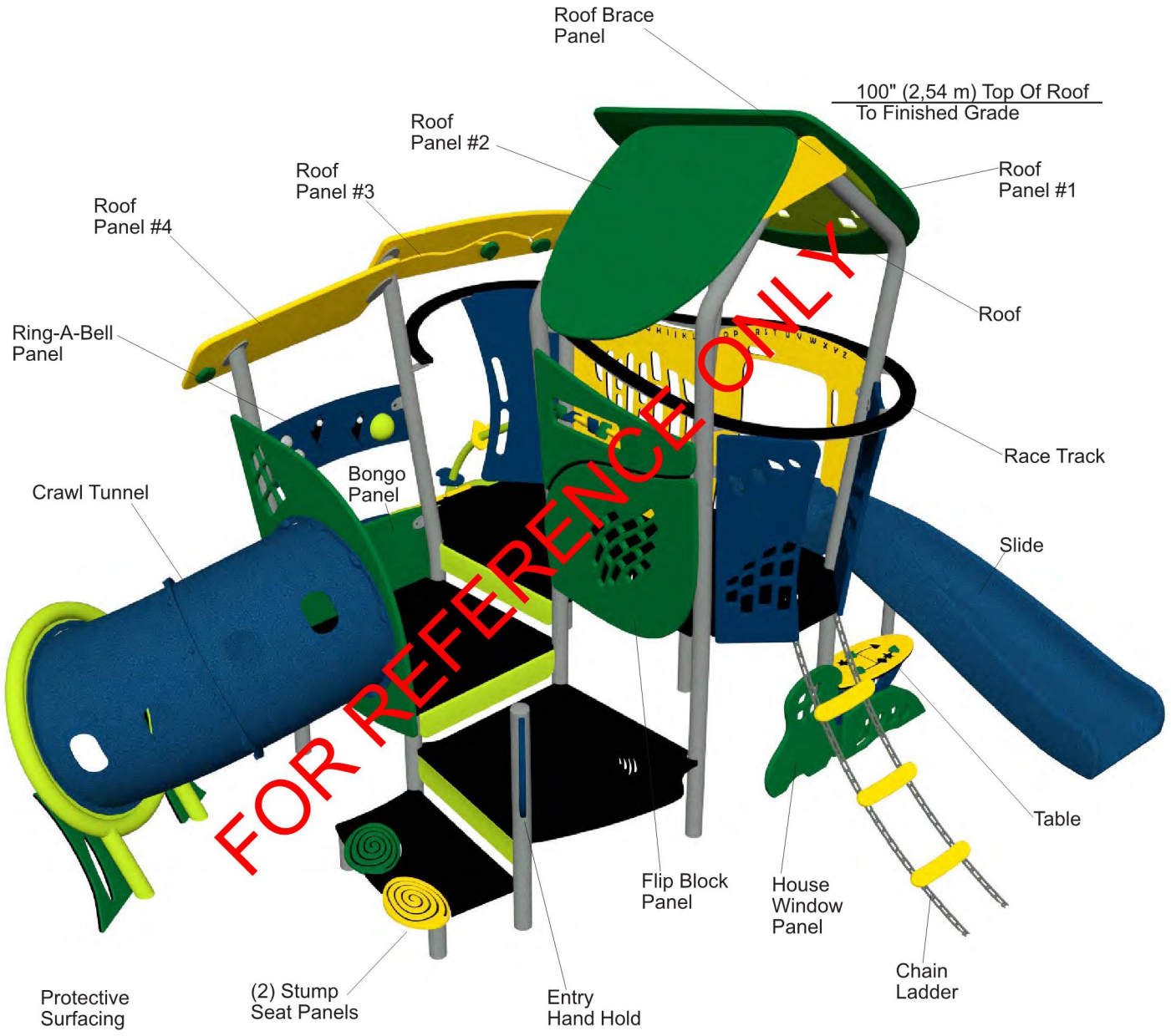

FOR REFERENCE ONLY

© 2022 by Landscape Structures. All rights reserved.

landscape structures®

ISO 14001 CERTIFIED

ISO 9001 Certified

SAFETY NOTE

Choose a protective surfacing material that has a Critical Height Value of at least the height of the Highest Accessible Part/Fall Height of the adjacent equipment. (Ref. ASTM F1487.)

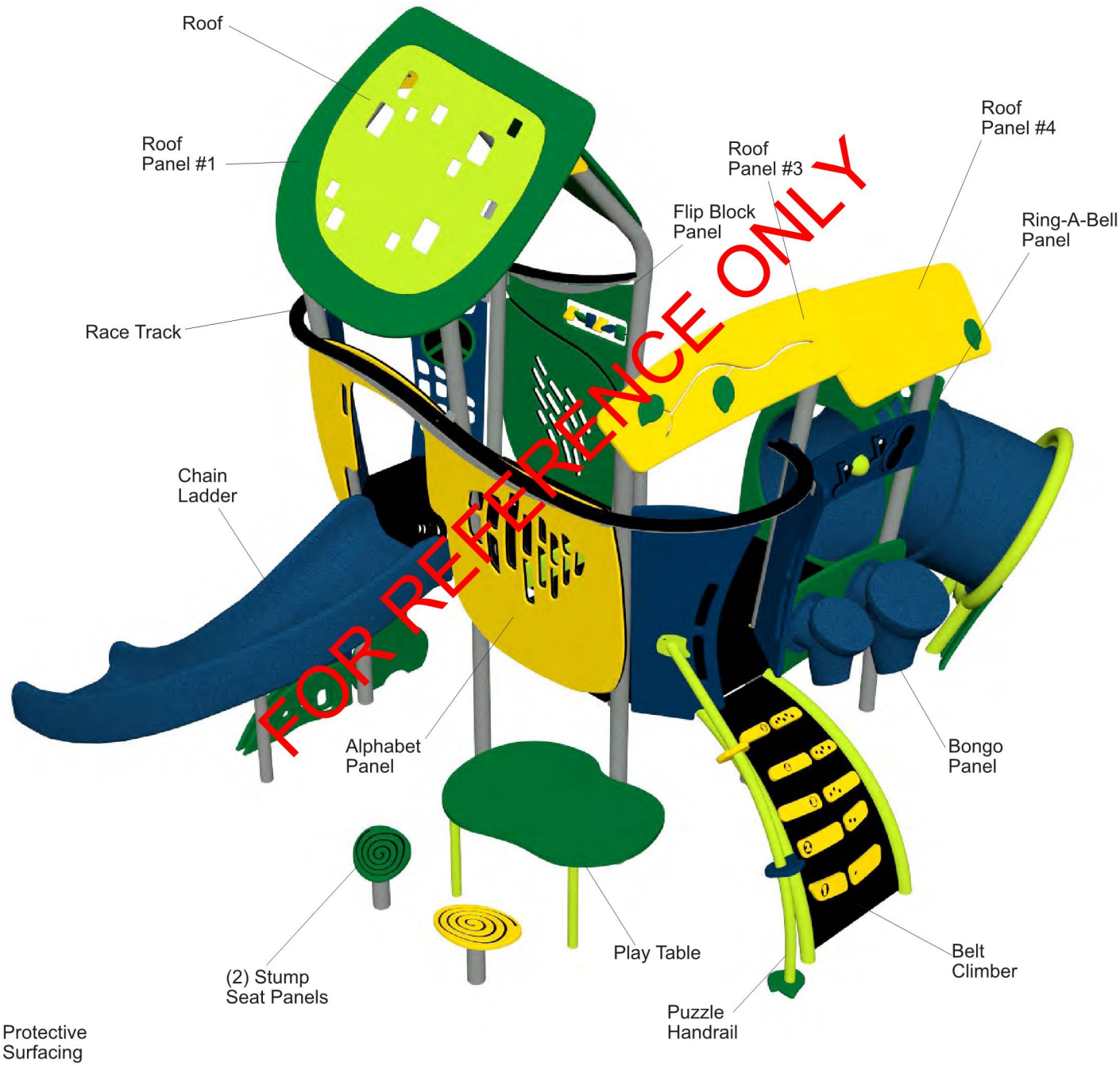

197057 Motion

Smart Play®

© 2022 by Landscape Structures. All rights reserved.

landscape structures®

ISO 14001 CERTIFIED

ISO 9001 Certified

SAFETY N

Choose a protective surf[illegible] has a Critical Height Value of at least the height of the Highest Accessible Part/Fall Height of the adjacent equipment. (Ref. ASTM F1487.)

PLAN VIEW /FOOTING LAYOUT

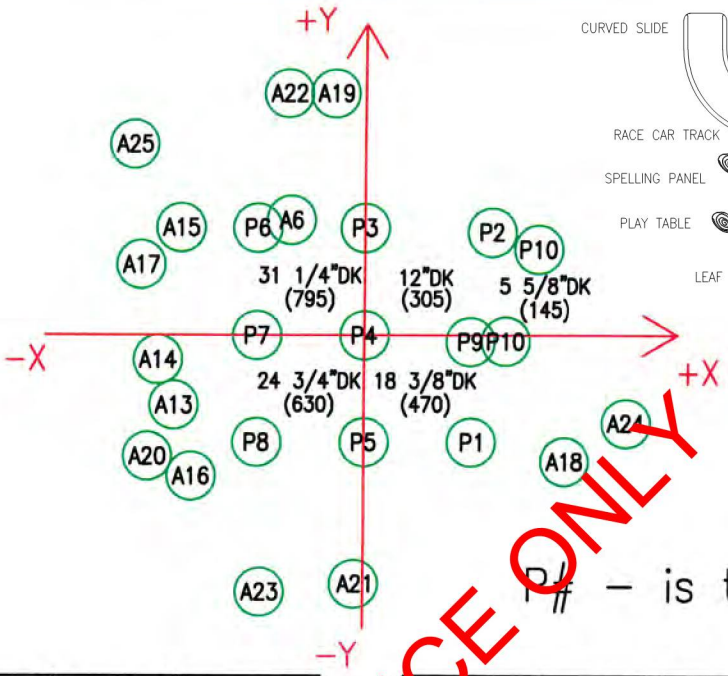

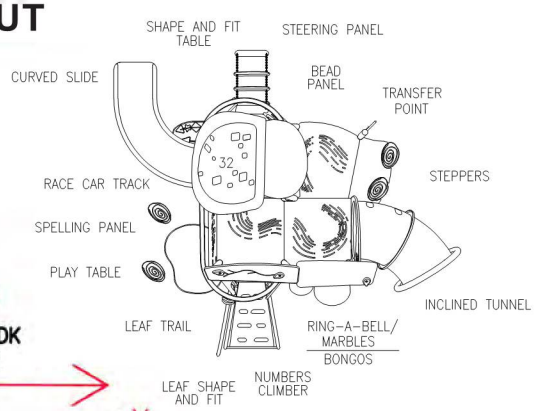

P# – is the POST Number

FOR REFERENCE ONLY

N.	I.D.	X (cm)	Y (cm)	Dist. to 0	DIA (cm)
1	P4	0	0	0	30
2	P9	67	-4	67	30
3	P5	0	-67	67	30
4	P7	-67	0	67	30
5	P3	0	67	67	30
6	A6	-46	72	86	30
7	P10	89	-4	89	30
8	P8	-67	-67	95	30
9	P1	67	-67	95	30
10	P6	-67	67	95	30
11	P2	80	65	103	30
12	P10	109	54	122	30
13	A13	-119	-44	127	30
14	A14	-130	-15	130	30
15	A15	-115	67	134	30
16	A16	-108	-89	140	30
17	A17	-140	44	147	30
18	A18	126	-79	149	30
19	A19	-19	152	153	30
20	A20	-136	-76	156	30
21	A21	-6	-156	156	30
22	A22	-48	152	159	30
23	A23	-65	-162	174	30
24	A24	165	-55	174	30
25	A25	-145	120	188	30

N.	I.D.	X (ft-in)	Y (ft-in)	Dist. to 0	DIA (in)
1	P4	0"	0"	0"	12
2	P9	2'-2"	-2"	2'-2"	12
3	P5	0"	-2'-3"	2'-3"	12
4	P7	-2'-3"	0"	2'-3"	12
5	P3	0"	2'-3"	2'-3"	12
6	A6	-1'-6"	2'-4"	2'-10"	12
7	P10	2'-11"	-1"	2'-11"	12
8	P8	-2'-3"	-2'-3"	3'-1"	12
9	P1	2'-3"	-2'-3"	3'-1"	12
10	P6	-2'-3"	2'-3"	3'-1"	12
11	P2	2'-8"	2'-1"	3'-4"	12
12	P10	3'-7"	1'-9"	4'	12
13	A13	-3'-11"	-1'-5"	4'-2"	12
14	A14	-4'-3"	-6"	4'-3"	12
15	A15	-3'-9"	2'-3"	4'-5"	12
16	A16	-3'-7"	-2'-11"	4'-7"	12
17	A17	-4'-7"	1'-5"	4'-10"	12
18	A18	4'-2"	-2'-7"	4'-11"	12
19	A19	-8"	5'	5'	12
20	A20	-4'-6"	-2'-6"	5'-1"	12
21	A21	-2"	-5'-2"	5'-2"	12
22	A22	-1'-7"	5'	5'-3"	12
23	A23	-2'-2"	-5'-4"	5'-9"	12
24	A24	5'-5"	-1'-10"	5'-9"	12
25	A25	-4'-9"	3'-11"	6'-2"	12

© 2022 by Landscape Structures. All rights reserved.

landscape structures®

ISO 14001 CERTIFIED

ISO 9001 Certified

SAFETY NOTE

Choose a protective surfacing material that has a Critical Height Value of at least the height of the Highest Accessible Part/Fall Height of the adjacent equipment. (Ref. ASTM F1487.)

DETAIL
SURFACE MOUNT

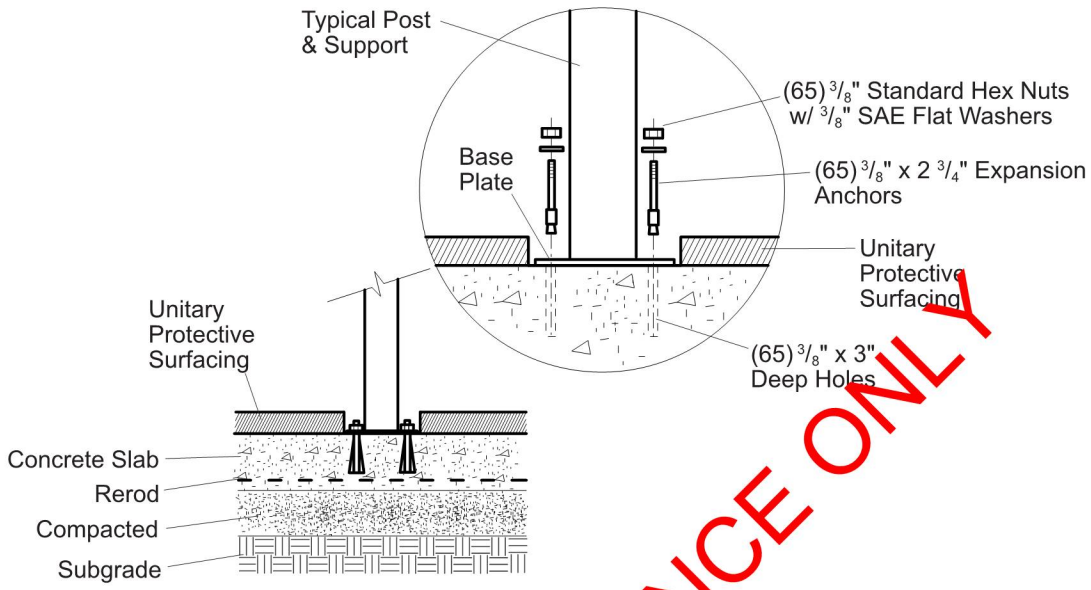

FOR REFERENCE ONLY

DETAIL
DIRECT BURY

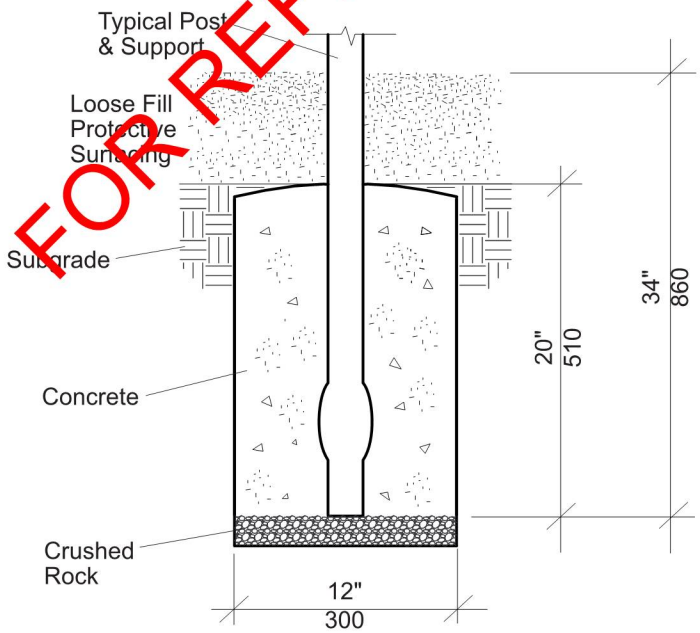

© 2022 by Landscape Structures. All rights reserved.

landscape structures®

ISO 14001 CERTIFIED

ISO 9001 Certified

SAFETY N

Choose a protective surf… has a Critical Height Value of at least the height of the Highest Accessible Part/Fall Height of the adjacent equipment. (Ref. ASTM F1487.)

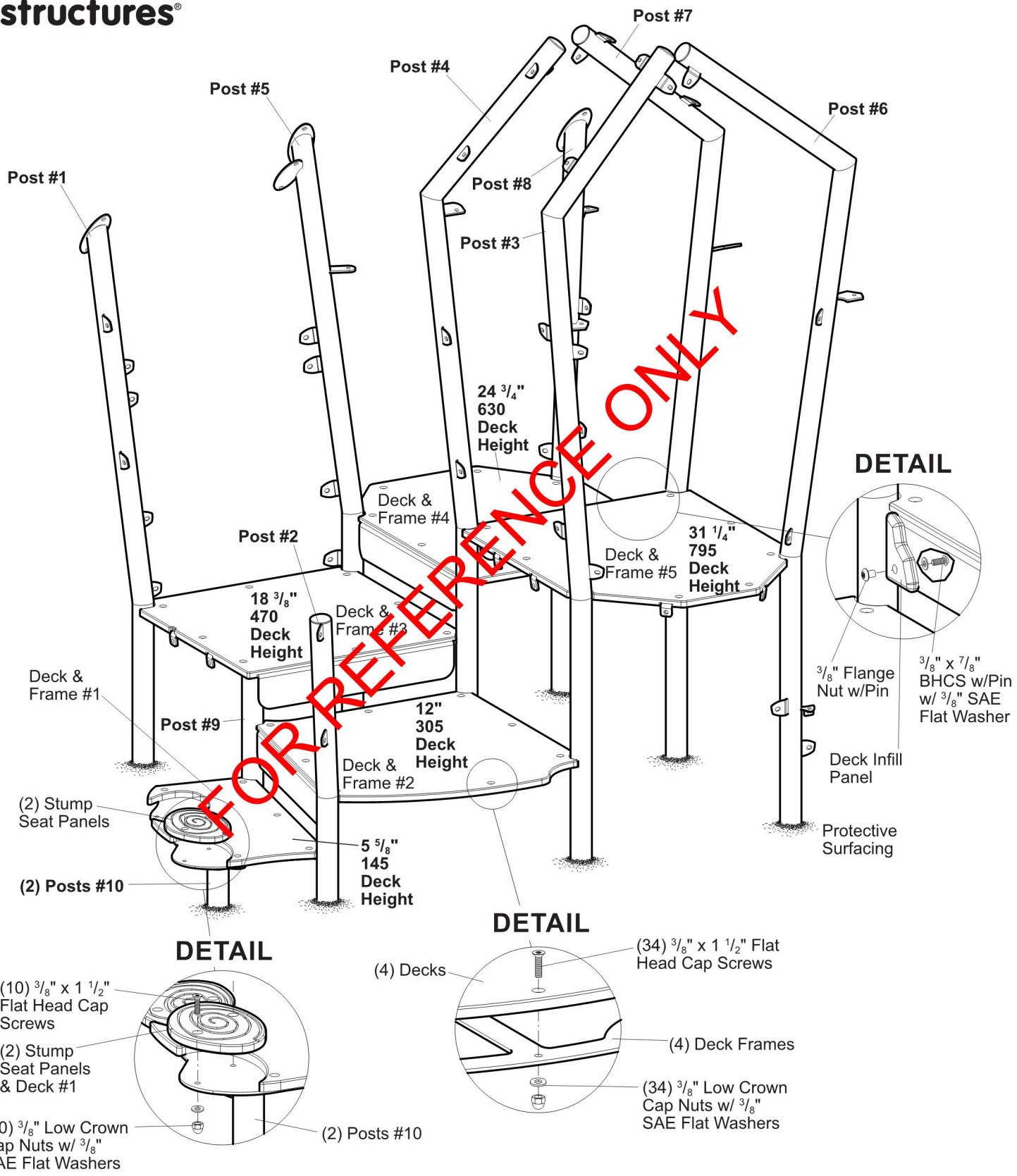

FOR REFERENCE ONLY

Smart Play®

197057 Motion

© 2022 by Landscape Structures. All rights reserved.

Document #30…

landscape structures®

Posts & Decks

ISO 14001 CERTIFIED

ISO 9001 Certified

SAFETY NOTE

Choose a protective surfacing material that has a Critical Height Value of at least the height of the Highest Accessible Part/Fall Height of the adjacent equipment. (Ref. ASTM F1487.)

Parts List

Part#	Description	Qty.
196425	Post #1, Specify Color (SM)	1
197094	Post #1, Specify Color (DB)	1
196424	Post #2, Specify Color (SM)	1
197095	Post #2, Specify Color (DB)	1
196426	Post #3, Specify Color (SM)	1
197096	Post #3, Specify Color (DB)	1
196427	Post #4, Specify Color (SM)	1
197097	Post #4, Specify Color (DB)	1
196428	Post #5, Specify Color (SM)	1
197098	Post #5, Specify Color (DB)	1
196429	Post #6, Specify Color (SM)	1
197099	Post #6, Specify Color (DB)	1
196431	Post #7, Specify Color (SM)	1
197100	Post #7, Specify Color (DB)	1
227199	Post #8, Specify Color (SM)	1
227198	Post #8, Specify Color (DB)	1
196524	Post #9, Specify Color (SM)	1
197102	Post #9, Specify Color (DB)	1
197246	Post #10, Specify Color (SM)	2
197272	Post #10, Specify Color (DB)	2
211280	Deck Surface #1, Black	1
211281	Deck Surface #2, Black	1
211282	Deck Surface #3, Black	1
211283	Deck Surface #4, Black	1
211284	Deck Surface #5, Black	1
196582	Deck Frame #1, Specify Color	1
196583	Deck Frame #2, Specify Color	1
196584	Deck Frame #3, Specify Color	1
196506	Deck Frame #4, Specify Color	1
196586	Deck Frame #5, Specify Color	1
197004	Stump Seat #1, Specify Color	1
197050	Stump Seat #2, Specify Color	1
200950	Deck Infill Panel, Specify Color	1
222622	**Mainstructure Hardware Package**	1
100365	3/8" SAE Flat Washer, SST	45
100349	3/8" Low Crown Cap Nut, SST	44
151421	3/8" x 1 1/2" FHCS w/Pin	44
100196	3/8" x 7/8" BHCS w/Pin, SST	1
100353	3/8" Flange Nut w/Pin, SST	1
200978	**Motion Hardware Package (SM)**	1
100327	3/8" Standard Hex Nuts, SST.	65
100365	3/8" SAE Flat Washers, SST.	65
100263	3/8" x 2 3/4" Expansion Anchors	65

DB = Direct Bury
SM = Surface Mount

Specifications

Deck Frame: Fabricated from 1/4" (6,35 mm) HRPO steel sheet. Finish: ProShield®, color specified.

GripX Deck Surface: 3/4" (19,05 mm) Thick Permalene®, black in color.

Panels: Recycled Permalene, color specified.

Post: Weldment comprised of 2.375" (60,33 mm) O.D. RS20 (.095"-.105") (2,41 mm - 2,67 mm) wall galvanized steel tubing, 1/4" (6,35 mm) HRPO steel sheet and 7 GA. (.179") (4,55 mm) HRPO steel sheet. Finish: ProShield, color specified.

Fasteners: Primary fasteners shall be socketed and pinned tamperproof in design, stainless steel (SST) per ASTM F 879 unless otherwise indicated (see specific product installation specifications).

Installation Time: Approx. 30 man hours for entire structure (DB)
Approx. 25 man hours for entire structure (SM)

Fall Height: 32" (813 mm)

Area Required: 24' x 24' (7,31 m x 7,31 m) minimum

Concrete: Approx. 32.75 cu. ft. for entire structure (DB)

Weight: 1100 lbs. (DB)
950 lbs. (SM)

Height: 100" (2,54 m) Top Of Roof To Finished Grade

FOR REFERENCE ONLY

Installation Instructions

1) **(Direct Bury)** Dig footings spaced as shown. Orient posts correctly and set in proper footing holes.

2) Starting with the highest deck, attach deck frames and decks to posts. Level decks. Continue until all deck frames and decks are in position.

3) Install stump seat panels to deck frame.

4) Attach deck infill panel.

5) Attach remaining components and panels according to their respective installation sheets.

6) **(Direct Bury)** With structure square, plumb and level, pour concrete footings. Allow concrete to cure a minimum of 72 hours before users are allowed to play on the structure.

   Surface Mount - Drill 3/8" x 3" deep holes through post and footer plates into concrete slab using 3/8" masonry bit and hammer drill. Tap 3/8" x 2 3/4" expansion anchors into drilled holes and fasten with 3/8" standard hex nuts and 3/8" SAE flat washers.

7) Install protective surfacing before users are allowed to play on the structure.

© 2022 by Landscape Structures. All rights reserved.

landscape structures®

ISO 14001 CERTIFIED

ISO 9001 Certified

SAFETY N

Choose a protective surf[illegible] has a Critical Height Value of at least the height of the Highest Accessible Part/Fall Height of the adjacent equipment. (Ref. ASTM F1487.)

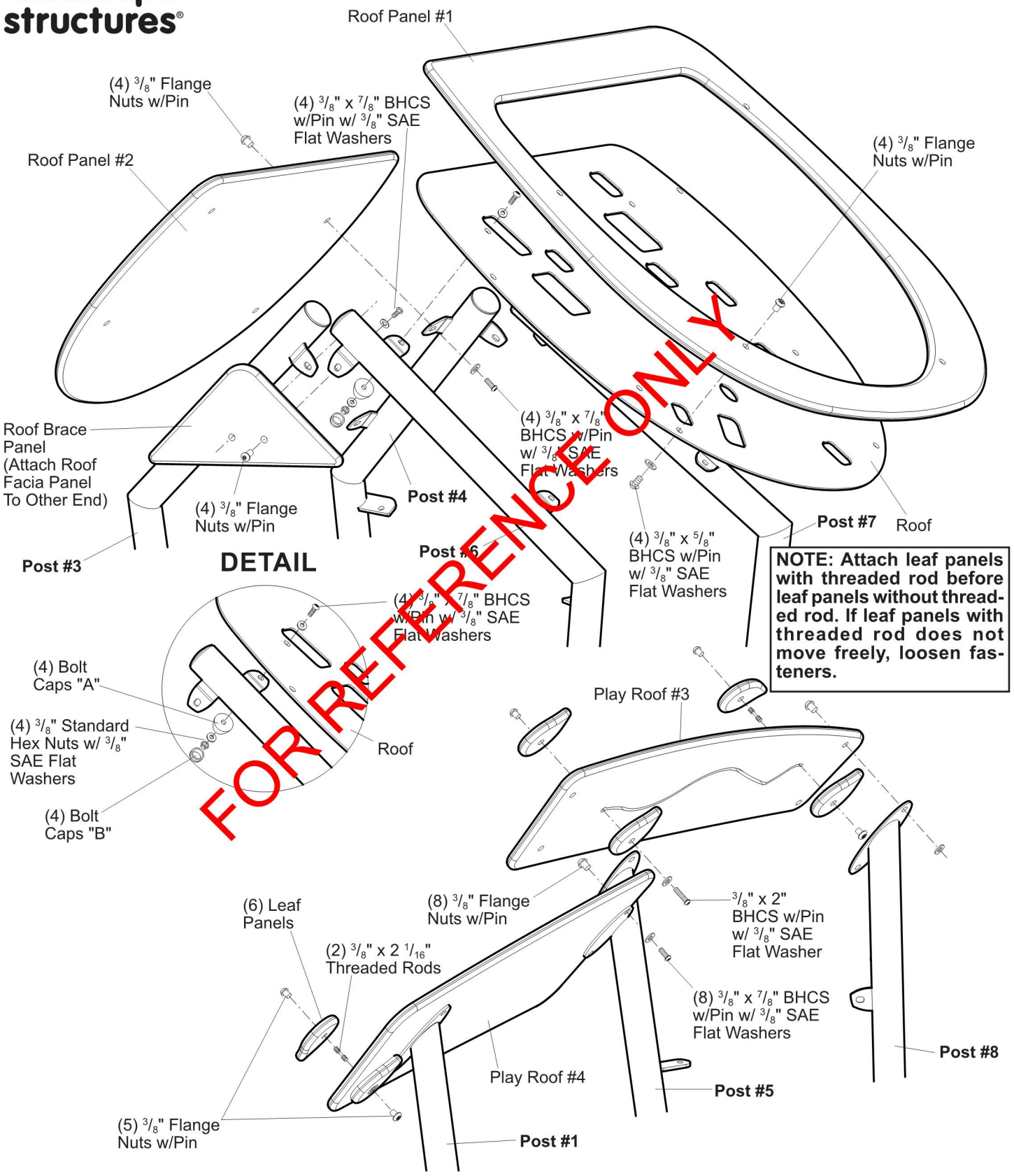

NOTE: Attach leaf panels with threaded rod before leaf panels without threaded rod. If leaf panels with threaded rod does not move freely, loosen fasteners.

FOR REFERENCE ONLY

197057 Motion

Smart Play®

© 2022 by Landscape Structures. All rights reserved.

landscape structures®

Roof

SAFETY NOTE

Choose a protective surfacing material that has a Critical Height Value of at least the height of the Highest Accessible Part/Fall Height of the adjacent equipment. (Ref. ASTM F1487.)

Parts List

Part#	Description	Qty.
200383	**Roof 2 Panel Set, Specify Color**	1
196802	Roof Panel #1, Specify Color	1
196805	Roof Panel #2, Specify Color	1
196807	Roof Panel #3, Specify Color	1
196833	Roof Panel #4, Specify Color	1
196810	Roof, Specify Color	1
196806	Roof Brace Panel, Specify Color	1
199316	Play Roof Facia Panel, Specify Color	1
197233	Leaf Panel, Specify Color	6
307488	**Motion Roofs Hardware Package**	1
100195	$^{3}/_{8}$" x $^{5}/_{8}$" BHCS w/Pin, SST	4
100196	$^{3}/_{8}$" x $^{7}/_{8}$" BHCS w/Pin, SST	20
100327	$^{3}/_{8}$" Standard Hex Nut, SST	4
100353	$^{3}/_{8}$" Flange Nut w/Pin, SST	25
100365	$^{3}/_{8}$" SAE Flat Washer, SST	29
100173	$^{3}/_{8}$" x 2" BHCS w/Pin, SST	1
123115	$^{3}/_{8}$" x 2 $^{1}/_{16}$" Threaded Rod	2
108184	Bolt Cap Part A, White	4
108185	Bolt Cap Part B, White	4

Specifications

Panels: Recycled Permalene® panel, color specified.

Roof: Fabricated from 7 GA. (.179") (4,55 mm) HRPO steel sheet. Finish: ProShield®, color specified.

Fasteners: Primary fasteners shall be socketed and pinned tamperproof in design, stainless steel (SST) per ASTM F 879 unless otherwise indicated (see specific product installation/specifications).

FOR REFERENCE ONLY

Installation Instructions

1) Attach leaf panels to roof panels.

2) Attach roof and roof panels to post tabs.

© 2022 by Landscape Structures. All rights reserved.

landscape structures®

ISO 14001 CERTIFIED

ISO 9001 Certified

SAFETY N

Choose a protective surf… has a Critical Height Value of at least the height of the Highest Accessible Part/Fall Height of the adjacent equipment. (Ref. ASTM F1487.)

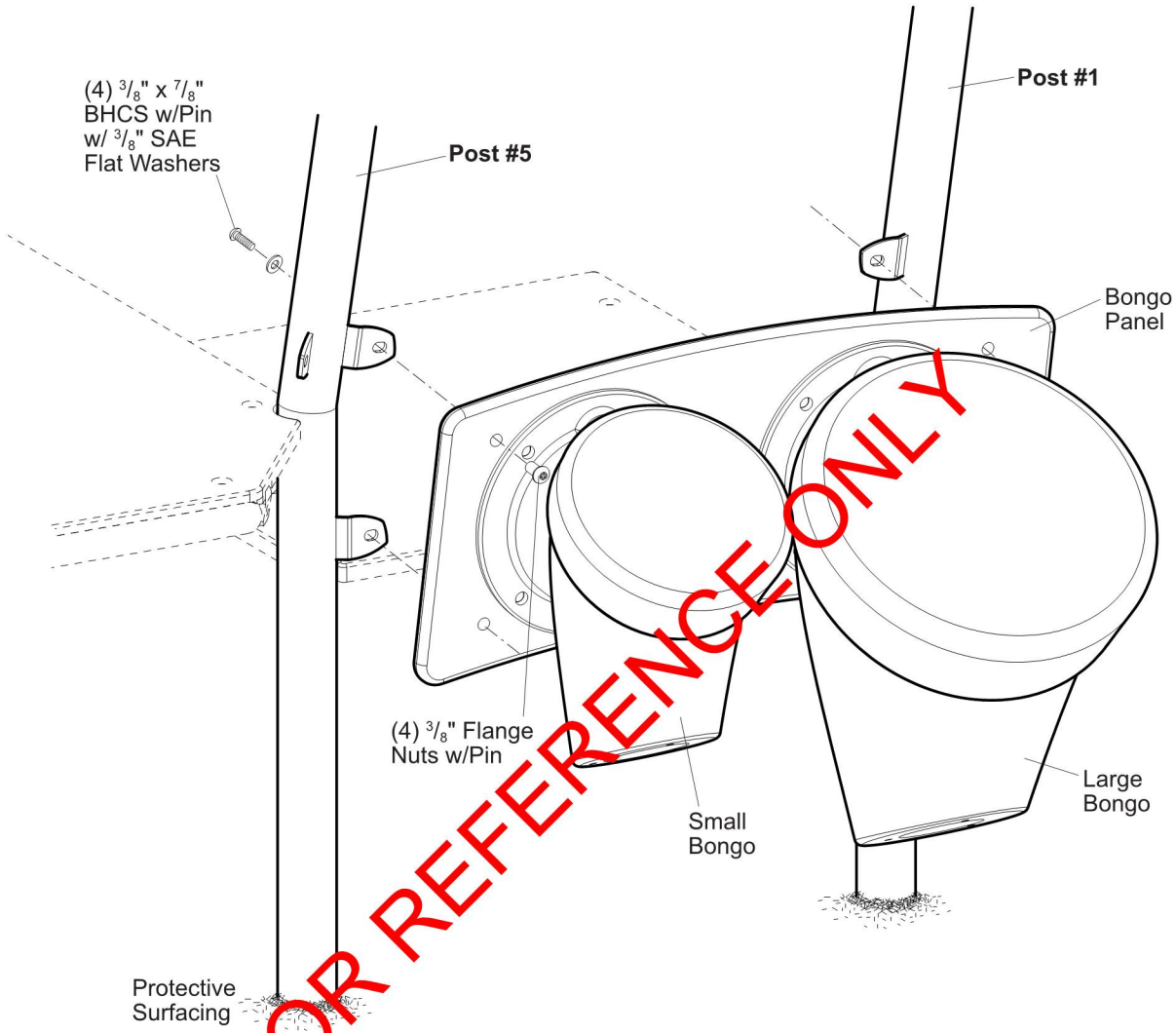

FOR REFERENCE ONLY

DETAIL
BONGO ATTACHMENT

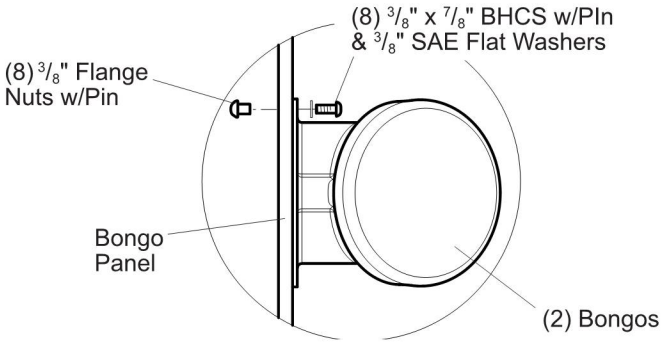

DETAIL
SCREEN ATTACHMENT

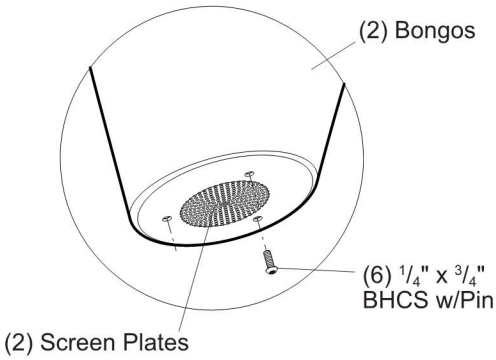

NOTE: Screen plates attach (flat side to flat side) to inside of Bongos.

197057 Motion

© 2022 by Landscape Structures. All rights reserved.

landscape structures®

ISO 14001 CERTIFIED

ISO 9001 Certified

SAFETY NOTE

Choose a protective surfacing material that has a Critical Height Value of at least the height of the Highest Accessible Part/Fall Height of the adjacent equipment. (Ref. ASTM F1487.)

Bongo Panel

Parts List

Part#	Description	Qty.
163911	Small Bongo, Specify Color	1
163912	Large Bongo, Specify Color	1
196817	Bongo Panel, Specify Color	1
164523	Screen Plate, Black	2
200949	**Bongo Panel Hardware Package**	1
100196	$^3/_8$" x $^7/_8$" BHCS w/Pin, SST	12
100353	$^3/_8$" Flange Nut w/Pin, SST	12
100365	$^3/_8$" SAE Flat Washers, SST	12
162374	$^1/_4$" x $^3/_4$" BHCS w/Pin, SST	6
127463	T-27 TPP Hex Bit (Torx)	1

Specifications

Panel: Recycled Permalene® panel, color specified.

Bongo: Rotationally molded from U.V. stabilized linear low density polyethylene, color specified.

Screen Plate: Fabricated from 12 GA. (.105") (2,67 mm) HRPO flat steel. Finish: ProShield®, black in color.

Fasteners: Primary fasteners shall be socketed and pinned tamperproof in design, stainless steel (SST) per ASTM F 879 unless otherwise indicated (see specific product installation/specifications).

Installation Instructions

1) Attach screen plates to bongos. **NOTE:** *Screen plates attach (flat side to flat side) to inside of Bongos.*

2) Attach Bongos to Bongo Panel.

3) Attach Bongo Panel to post tabs.

FOR REFERENCE ONLY

landscape structures®

ISO 14001 CERTIFIED

ISO 9001 Certified

SAFETY N

Choose a protective surf… has a Critical Height Value of at least the height of the Highest Accessible Part/Fall Height of the adjacent equipment. (Ref. ASTM F1487.)

NOTE: Bottom hole in tunnel section does not require a fastener.

NOTE: Correct orientation of craw tunnel.

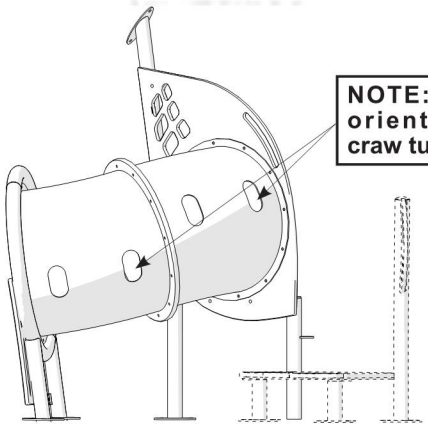

Crawl Tunnel Panel

(4) 3/8" x 7/8" BHCS w/Pin w/ 3/8" SAE Flat Washers

(4) 3/8" Flange Nuts w/Pin

(11) 3/8" Flange Nuts w/Pin

Post #1

(11) 3/8" x 7/8" BHCS w/Pin w/ Roto Tunnel Contoured Washers

Flanged 30° Tunnel Section

(10) 3/8" x 7/8" BHCS w/Pin w/Roto Tunnel Contoured Washers

(12) Attachment Blocks

30° Tunnel Section

(10) 3/8" Flange Nuts w/Pin

(2) Tunnel Rings

Tunnel Support

(2) 3/8" Flange Nuts w/Pin

Protective Surfacing

9 5/8" 244

Tunnel Grass Left Panel

(2) 3/8" Flange Nuts w/Pin

Tunnel Grass Panel

(2) 3/8" x 7/8" BHCS w/Pin w/ 3/8" SAE Flat Washers

(12) 3/8" x 1 1/8" BHCS w/Pin w/Roto Tunnel Contoured Washers

(2) 3/8" x 1 11/16" BHCS w/Pin w/ Roto Tunnel Contoured Washers

Post #2

(2) 3/8" Flange Nuts w/Pin

Entry Hand-hold Panel

FOR REFERENCE ONLY

DETAIL
TUNNEL ASSY.

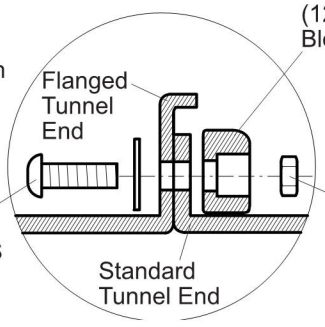



NOTE: Be sure to orientate contoured washers as shown.

197057 Motion

Smart Play®

© 2022 by Landscape Structures. All rights reserved.

landscape structures®

ISO 14001 CERTIFIED

ISO 9001 Certified

SAFETY NOTE
Choose a protective surfacing material that has a Critical Height Value of at least the height of the Highest Accessible Part/Fall Height of the adjacent equipment. (Ref. ASTM F1487.)

Crawl Tunnel

Parts List

Part#	Description	Qty.
201077	Tunnel Ring Panel, Specify Color	2
196827	Crawl Tunnel Panel, Specify Color	1
200748	Tunnel Grass Left Panel, Specify Color	1
198121	Tunnel Grass Panel, Specify Color	1
108175	30° Tunnel Section, Specify Color	1
108177	Flanged 30° Tunnel Section, Specify Color	1
200498	Tunnel Support, Specify Color (SM)	1
201075	Tunnel Support, Specify Color (DB)	1
133047	Attachment Block, Specify Color	12
197232	Entry Handhold Panel, Specify Color	1
219162	**Crawl Tunnel Hardware Package**	1
100196	3/8" x 7/8" BHCS w/Pin, SST	29
100198	3/8" x 1 1/8" BHCS w/Pin, SST	12
123224	3/8" x 1 11/16 BHCS w/Pin, SST	2
100353	3/8" Flange Nut w/Pin, SST	31
100365	3/8" SAE Flat Washer, SST	8
216834	Roto Tunnel Contoured Washer, SST	35
100327	3/8" Standard Hex Nut, SST	12

DB = Direct Bury
SM = Surface Mount

Specifications

Panels: Recycled Permalene® panel, color specified.

Tunnel Section: Rotationally molded from U.V. stabilized linear low density polyethylene, color specified.

Tunnel Support: Weldment comprised of 2.375" (60,33 mm) O.D. RS20 (.095"-.105") (2,41 mm - 2,67 mm) wall galvanized steel tubing, and 1/8" (.125") (3,18 mm) HRPO steel sheet. Finish: ProShield®, color specified.

Attachment Block: U.V. stabilized high-density polyethylene, color specified.

Fasteners: Primary fasteners shall be socketed and pinned tamperproof in design, stainless steel (SST) per ASTM F 879 unless otherwise indicated (see specific product installation/specifications).

FOR REFERENCE ONLY

Installation Instructions

1) Attach crawl tunnel panel to post and deck tabs.
2) Attach crawl tunnel sections to crawl tunnel panel.
3) Attach tunnel support, tunnel ring panels and grass panels to crawl tunnel.
4) Attach entry handhold panel to post tabs.

© 2022 by Landscape Structures. All rights reserved.

landscape structures®

ISO 14001 CERTIFIED

ISO 9001 Certified

SAFETY N

Choose a protective surf[illegible] has a Critical Height Value of at least the height of the Highest Accessible Part/Fall Height of the adjacent equipment. (Ref. ASTM F1487.)

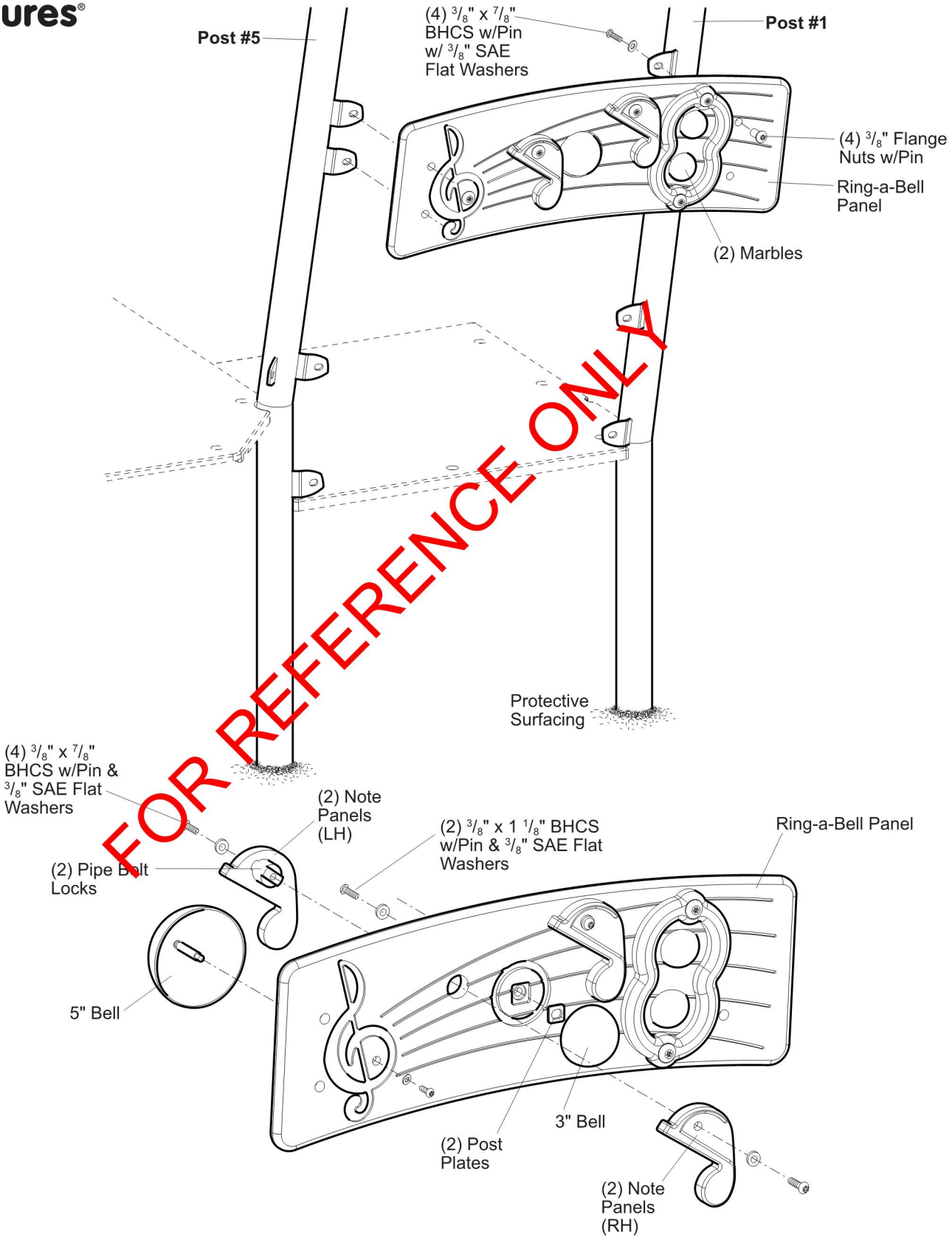

FOR REFERENCE ONLY

197057 Motion

Smart Play®

© 2022 by Landscape Structures. All rights reserved.

landscape structures®

ISO 14001 CERTIFIED

ISO 9001 Certified

SAFETY NOTE

Choose a protective surfacing material that has a Critical Height Value of at least the height of the Highest Accessible Part/Fall Height of the adjacent equipment. (Ref. ASTM F1487.)

Ring-a-Bell Panel

Parts List

Part#	Description	Qty.
197308	Note Panel (RH), Specify Color	2
197309	Note Panel (LH), Specify Color	2
158433	3" Bell, Specify Color	1
158434	5" Bell, Specify Color	1
200770	Ring-a-Bell Panel, Specify Color	1
219272	**Ring-a-Bell Hardware Package**	1
100196	$^3/_8$" x $^7/_8$ BHCS w/Pin, SST	8
100198	$^3/_8$" x 1 $^1/_8$" BHCS w/Pin, SST	2
100353	$^3/_8$" Flange Nut w/Pin, SST	4
100365	$^3/_8$" SAE Flat Washers, SST	10
158335	Bell Post Plate, SST	2
197312	Pipe Bolt Lock, Aluminum	2

Specifications

Panels: Recycled Permalene® , color specified.

Marble: 2" Diameter glass.

Bells: Fabricated from 10 GA. (.135") HRPO low carbon steel. Finish: ProShield®, color specified.

Fasteners: Primary fasteners shall be socketed and pinned tamperproof in design, stainless steel (SST) per ASTM F 879 unless otherwise indicated (see specific product installation/specifications).

Installation Instructions

1) Attach panel to post tabs.

2) Attach Note panels and pipe bolt locks to Ring-a-Bell panel.

3) Insert post plates into bell panel cutouts. Attach bells to Ring-a-Bell panel, as shown.

FOR REFERENCE ONLY

© 2022 by Landscape Structures. All rights reserved.

landscape structures®

ISO 14001 CERTIFIED

ISO 9001 Certified

SAFETY N

Choose a protective surf… has a Critical Height Value of at least the height of the Highest Accessible Part/Fall Height of the adjacent equipment. (Ref. ASTM F1487.)

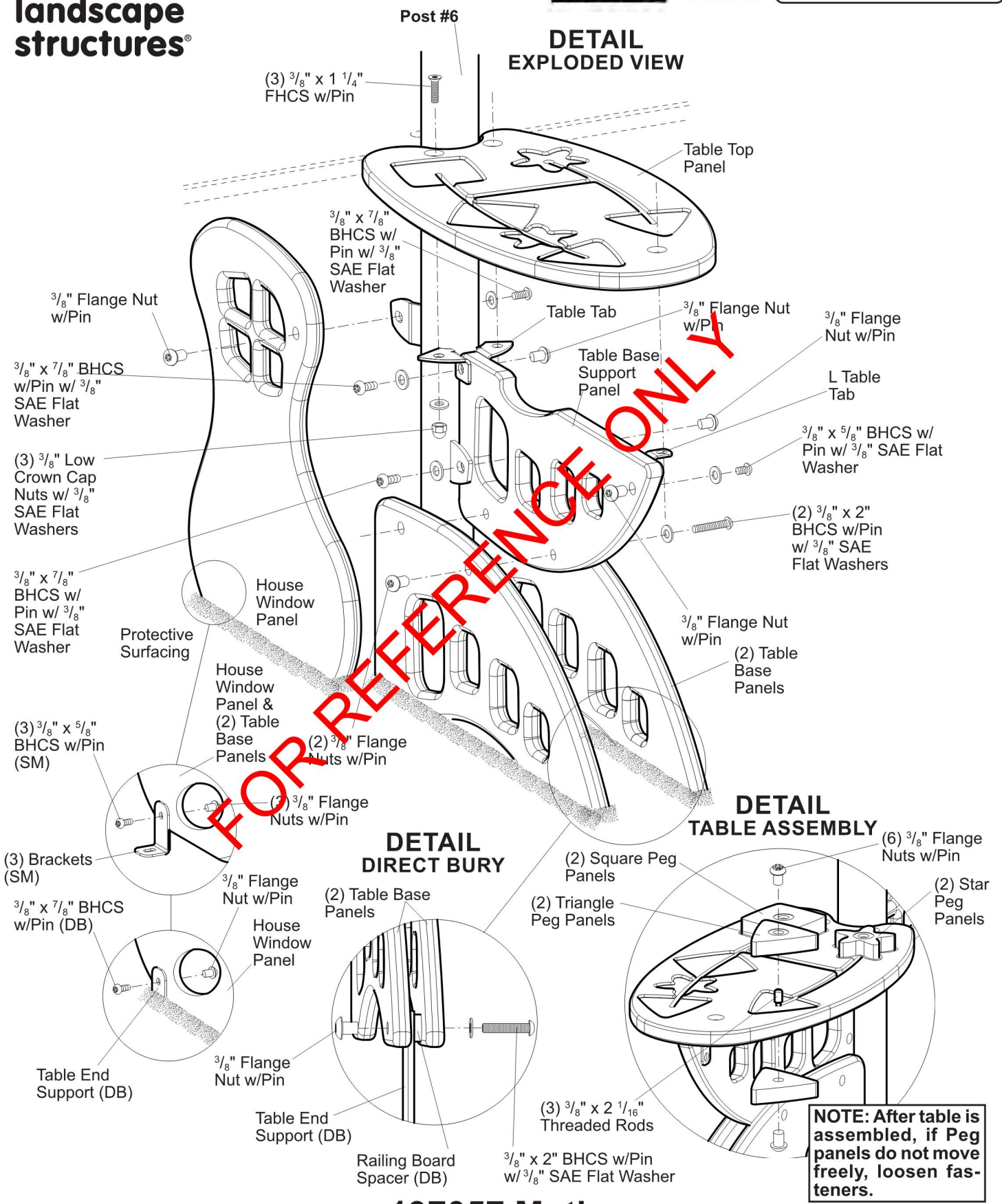

FOR REFERENCE ONLY

197057 Motion

Smart Play®

© 2022 by Landscape Structures. All rights reserved.

landscape structures®

ISO 14001 CERTIFIED

ISO 9001 Certified

SAFETY NOTE

Choose a protective surfacing material that has a Critical Height Value of at least the height of the Highest Accessible Part/Fall Height of the adjacent equipment. (Ref. ASTM F1487.)

Parts List

Part#	Description	Qty.
197306	Table Tab, Specify Color	1
204724	Angle Bracket, SST. (SM)	3
197307	L Table Tab, Specify Color	1
197054	House Panel, Specify Color	1
197055	Table Base Panel, Specify Color	2
197056	Table Base Support Panel, Specify Color	1
197069	Table Top Panel, Specify Color	1
197116	Star Peg Panel, Specify Color	2
197117	Square Peg Panel, Specify Color	2
197118	Triangle Peg Panel, Specify Color	2
201029	End Panel Support, (DB), Specify Color	2
207485	Railing Board,Spacer, (DB)	1
203618	**Play Table Hardware Package**	1
100196	$^3/_8$" x $^7/_8$" BHCS w/Pin, SST	4
100173	$^3/_8$" x 2" BHCS w/Pin, SST	3
100252	$^3/_8$" x 1 $^1/_4$" FHCS w/Pin, SST	3
100349	$^3/_8$" Low Crown Cap Nut, SST	3
100353	$^3/_8$" Flange Nut w/Pin, SST	15
123115	$^3/_8$" x 2 $^1/_{16}$" Threaded Rod	3
100365	$^3/_8$" SAE Flat Washer, SST	10
100195	$^3/_8$" x $^5/_8$" BHCS w/Pin, SST	4

Specifications

Panels: Recycled Permalene®, color specified.

End Panel Supt.: Weldment comprised of $^1/_4$" (6,35 mm) HRPO steel sheet and $^3/_8$" (9,53 mm) re-bar. Finish: ProShield, color specified.

Fasteners: Primary fasteners shall be socketed and pinned tamperproof in design, stainless steel (SST) per ASTM F 879 unless otherwise indicated (see specific product installation/specifications).

FOR REFERENCE ONLY

Installation Instructions

1) Attach table base support panel and house window panel to post tabs.
2) Attach table base panels to table base support panel.
3) Attach table top panel to post tabs and L table tab.
4) Attach peg panels to table top panel.
5) Attach angle brackets/supports to table base panels.

landscape structures®

ISO 14001 CERTIFIED

ISO 9001 Certified

SAFETY N

Choose a protective surf has a Critical Height Value of at least the height of the Highest Accessible Part/Fall Height of the adjacent equipment. (Ref. ASTM F1487.)

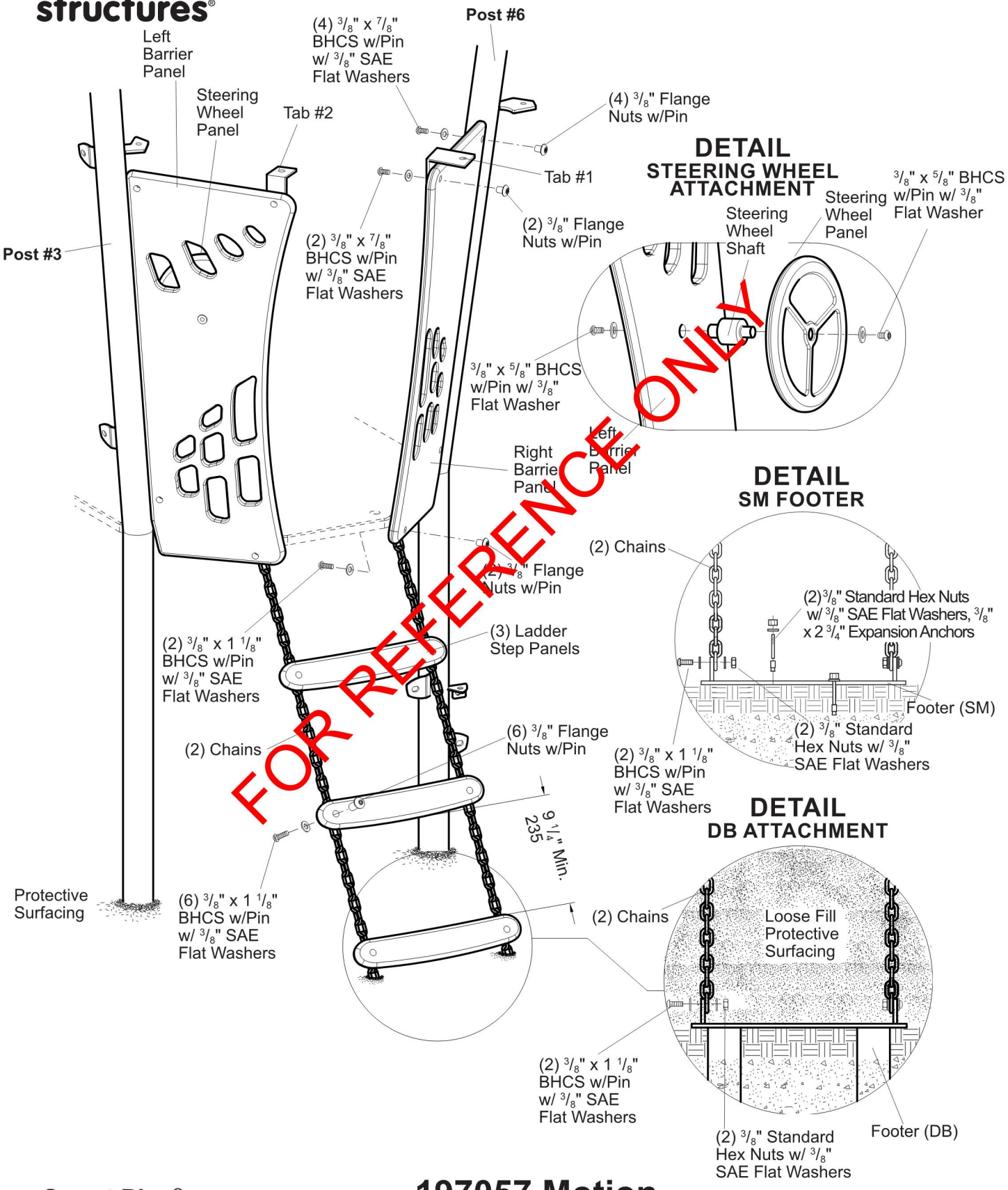

FOR REFERENCE ONLY

Smart Play®

197057 Motion

© 2022 by Landscape Structures. All rights reserved.

Document #30

landscape structures®

ISO 14001 CERTIFIED

ISO 9001 Certified

SAFETY NOTE
Choose a protective surfacing material that has a Critical Height Value of at least the height of the Highest Accessible Part/Fall Height of the adjacent equipment. (Ref. ASTM F1487.)

Chain Ladder

Parts List

Part#	Description	Qty.
200775	Chain Ladder Footer, (DB)	1
200760	Chain Ladder Footer, (SM)	1
196657	Barrier Panel, (R), Specify Color	1
196655	Barrier Panel, (L), Specify Color	1
200723	Steering Wheel Panel, Specify Color	1
152053	37 1/2" Chain, (SM), Dark Grey	2
152048	49 13/16" Chain, (DB), Dark Grey	2
197074	Ladder Step Panel, Specify Color	3
197070	Tab #1, Specify Color	1
197071	Tab #2, Specify Color	1
203620	**Chain Ladder Hardware Package**	1
100195	3/8" x 5/8" BHCS w/Pin, SST	2
100196	3/8" x 7/8" BHCS w/Pin, SST	6
100198	3/8" x 1 1/8" BHCS w/Pin, SST	10
100327	3/8" Standard Hex Nut, SST	2
100353	3/8" Flange Nut w/Pin, SST	14
100362	3/8" Flat Washer, SST	2
100365	3/8" SAE Flat Washer, SST	18
200550	Steering Wheel Shaft, Aluminum	1

DB = Direct Bury
SM = Surface Mount

Specifications

Panels: Recycled Permalene® panel, color specified.

Chain: Steel 3/16" (4,75 mm) straight link chain, 800 lb. (362,87 kilograms) working load limit. Finish: TenderTuff, color specified.

Chain

Ladder Footer: Weldment comprised of 1.900" (48,26 mm) O.D. RS20 (.090"-.100") (2,29 mm - 2,54 mm) wall galvanized steel tubing and 1/4" (6,35 mm) HRPO steel sheet. Finish: ProShield®, color specified.

Fasteners: Primary fasteners shall be socketed and pinned tamperproof in design, stainless steel (SST) per ASTM F 879 unless otherwise indicated (see specific product installation/specifications).

Installation Instructions

1) Attach panels to post tabs.
2) Attach panels and chain to deck frame tabs.
3) Attach steering wheel to left barrier panel.
4) Attach ladder steps to chains.
5) **(Direct Bury)** Determine footing locations by pulling chain ladder tight and laying end on subgrade. Drill footing holes 2" out from end of where chain ladder meets subgrade.

   Fasten chain ladder to support.

   Pour concrete into footing holes. Push chain ladder support into concrete until chain ladder is tight and top of support is positioned flush with top of subgrade. Temporarily weigh support down so it remains in position until concrete has set.

   (Surface Mount) Attach support to chain ladder. Pull chain ladder tight and drill 1/2" x 3" deep holes through support using hammer drill and 1/2" masonry bit. Tap expansion anchors into drilled holes. Fasten support to expansion anchors using 1/2" standard hex nuts with 1/2" flat washers.

FOR REFERENCE ONLY

© 2022 by Landscape Structures. All rights reserved.

landscape structures®

ISO 14001 CERTIFIED

ISO 9001 Certified

SAFETY N

Choose a protective surf[illegible] has a Critical Height Value of at least the height of the Highest Accessible Part/Fall Height of the adjacent equipment. (Ref. ASTM F1487.)

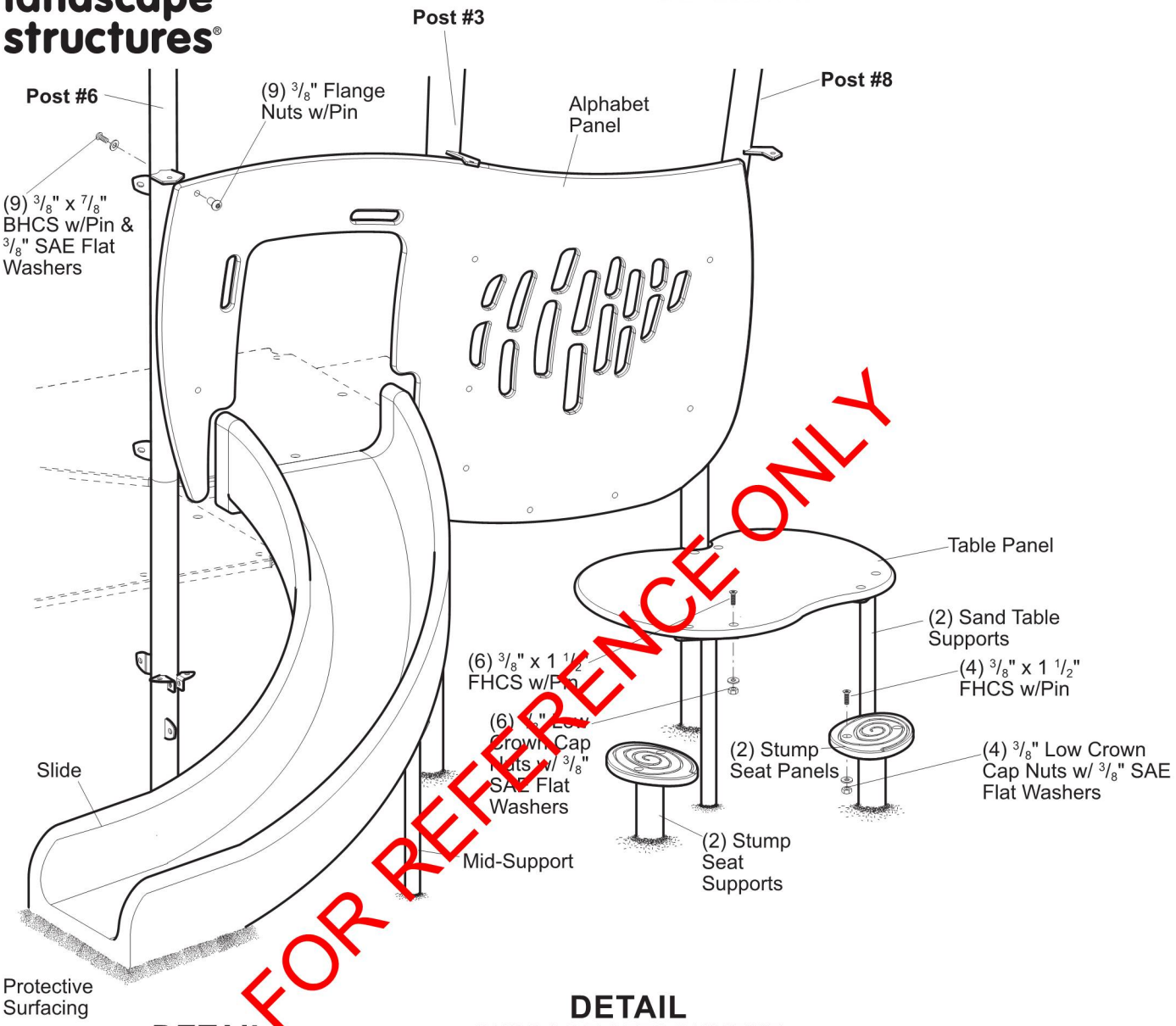

FOR REFERENCE ONLY

DETAIL
SLIDE ATTACHMENT

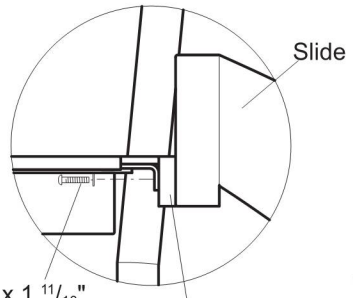

DETAIL
SUPPORT ATTACHMENT

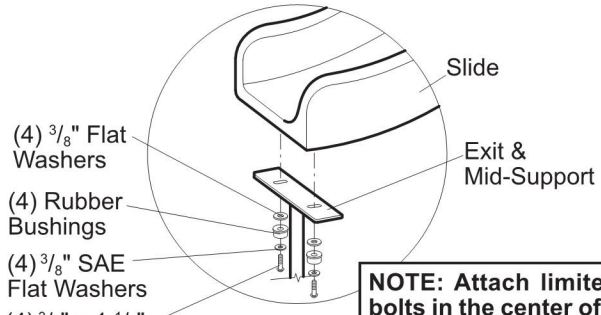

NOTE: Attach limited thread bolts in the center of the slots to allow for expansion and contraction. Snug bolts down only, do not overtighten.

197057 Motion

© 2022 by Landscape Structures. All rights reserved.

landscape structures®

Slide & Sand Table

ISO 14001 CERTIFIED

ISO 9001 Certified

SAFETY NOTE
Choose a protective surfacing material that has a Critical Height Value of at least the height of the Highest Accessible Part/Fall Height of the adjacent equipment. (Ref. ASTM F1487.)

Parts List

Part#	Description	Qty.
200985	Sand Table Support, (DB), Specify Color	2
200282	Sand Table Support, (SM), Specify Color	2
275936	Curved Slide, Specify Color	1
200988	Exit Support, (DB), Specify Color	1
200337	Exit Support, (SM), Specify Color	1
200987	Mid-Support, (DB), Specify Color	1
200338	Mid-Support, (SM), Specify Color	1
197004	Stump Seat Panel #1, Specify Color	1
197050	Stump Seat Panel #2, Specify Color	1
197005	Stump Seat Support, (DB), Specify Color	2
200284	Stump Seat Support, (SM), Specify Color	2
200954	Slide Spacer Panel, Specify Color	1
227197	Alphabet Panel, No Chute, Specify Color	1
206333	Table Panel, Specify Color	1
307491	**Alphabet Hardware Package**	1
100196	$^3/_8$" x $^7/_8$" BHCS w/Pin, SST	9
100353	$^3/_8$" Flange Nut w/Pin, SST	9
100365	$^3/_8$" SAE Flat Washer, SST	25
100362	$^3/_8$" Flat Washer, SST	4
151421	$^3/_8$" x 1 $^1/_2$" FHCS w/Pin, SST	10
123224	$^3/_8$" x 1 $^{11}/_{16}$" BHCS w/Pin, SST	2
100292	$^3/_8$" x 1 $^1/_4$" BHCS w/Pin Ltd. Thread Bolt, SST	4
100349	$^3/_8$" Low Crown Nut, SST	10
127463	T-27 TPP Hex Bit (Torx)	1
111442	Rubber Bushing	4

DB = Direct Bury
SM = Surface Mount

Specifications

Slide: Rotationally molded from U.V. stabilized linear low density polyethylene, color specified.

Mid-Support: Weldment comprised of 1.315" (33,40 mm) O.D. RS20 (.080" - .090") (2,03 mm-2,29 mm) galvanized steel tubing, and $^1/_4$" (6,35 mm) HRPO steel sheet. Finish: ProShield, color specified.

Sand Table Support: Weldment comprised of 1.315" (33,40 mm) O.D. RS20 (.080" - .090") (2,03 mm-2,29 mm) galvanized steel tubing, and $^1/_4$" (6,35 mm) HRPO steel sheet. Finish: ProShield, color specified.

Exit Footer: Weldment comprised of 2.375" (60,33 mm) O.D. x .188" (4,78 mm) wall galvanized steel tubing, and $^1/_4$" (6,35 mm) HRPO steel sheet. Finish: ProShield, color specified.

Stump Seat Support: Weldment comprised of 2.375" (60,33 mm) O.D. x .188" (4,78 mm) wall galvanized steel tubing, and $^1/_4$" (6,35 mm) HRPO steel sheet. Finish: ProShield, color specified.

Panels: Recycled Permalene®, color specified.

Fasteners: Primary fasteners shall be socketed and pinned tamperproof in design, stainless steel (SST) per ASTM F 879 unless otherwise indicated (see specific product installation/specifications).

Installation Instructions

1) Attach alphabet panel to post tabs and deck frame tabs.
2) Attach exit and mid-supports to slide. **NOTE:** *Attach bolts in center of the slots to allow for expansion and contraction. Snug bolts down only, do not over-tighten!* See Support Attachment Detail.
3) Attach slide to deck frame tab.
4) Attach table panel to sand table supports and post tab.
5) Attach stump seat panels to stump seat supports.

FOR REFERENCE ONLY

ECO-0102237 Document #30748700 replaces #29627900. Updated Hardware packages

© 2022 by Landscape Structures. All rights reserved.

landscape structures®

ISO 14001 CERTIFIED

ISO 9001 Certified

SAFETY N

Choose a protective surf[illegible] has a Critical Height Value of at least the height of the Highest Accessible Part/Fall Height of the adjacent equipment. (Ref. ASTM F1487.)

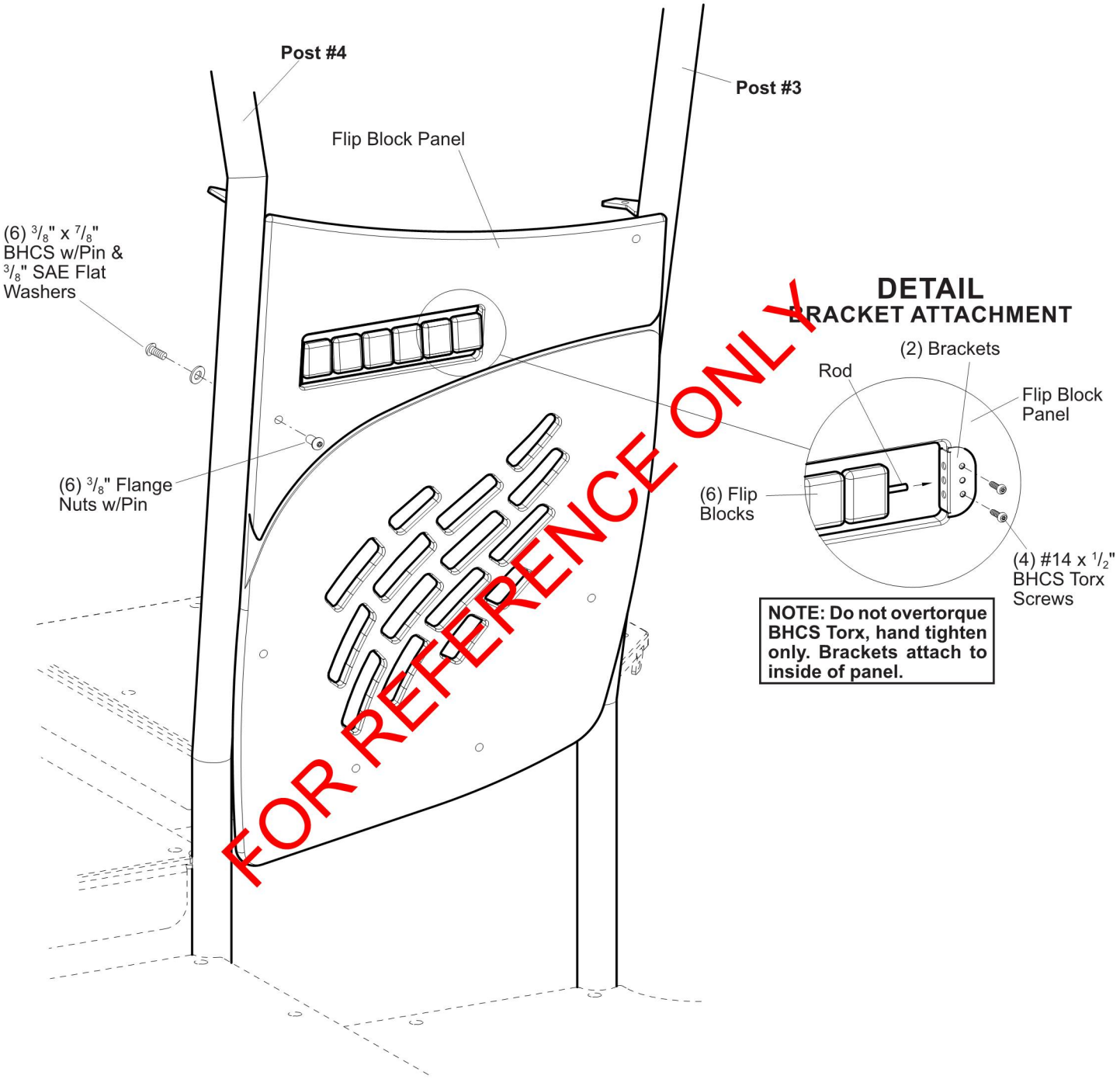

© 2022 by Landscape Structures. All rights reserved.

landscape structures®

ISO 14001 CERTIFIED

ISO 9001 Certified

SAFETY NOTE

Choose a protective surfacing material that has a Critical Height Value of at least the height of the Highest Accessible Part/Fall Height of the adjacent equipment. (Ref. ASTM F1487.)

Flip Block Panel

Parts List

Part#	Description	Qty.
196814	Flip Block Panel, Specify Color	1
106151	Flip Block Bracket, SST	2
200838	Flip Block 1, Specify Color	2
200982	Flip Block 2, Specify Color	2
200983	Flip Block 3, Specify Color	2
106161	1/4" x 12 3/8" Rod, SST	1
200964	**Flip Block Hardware Package**	1
100196	3/8" x 7/8" BHCS w/Pin, SST	6
100353	3/8" Flange Nut w/Pin, SST	6
100365	3/8" SAE Flat Washer, SST	6
129671	#14 x 1/2" Torx-Pin Cap Screw, SST	4
127463	T-27 TPP Hex Bit (Torx)	1

Specifications

Panel: Solid color Permalene® panel, color specified.

Flip Blocks: Made from compression-molded 3/4" (19,05 mm) thick U.V. stabilized high-density polyethylene with all edges eased. Black, red and yellow in color.

Fasteners: Primary fasteners shall be socketed and pinned tamperproof in design, stainless steel (SST) per ASTM F879 unless otherwise indicated (see specific product installation/specifications).

Installation Instructions

1) Attach flip blocks and brackets to flip block panel.

2) Attach panel assembly to post tabs.

FOR REFERENCE ONLY

© 2022 by Landscape Structures. All rights reserved.

landscape structures®

ISO 14001 CERTIFIED

ISO 9001 Certified

SAFETY N

Choose a protective surf has a Critical Height Value of at least the height of the Highest Accessible Part/Fall Height of the adjacent equipment. (Ref. ASTM F1487.)

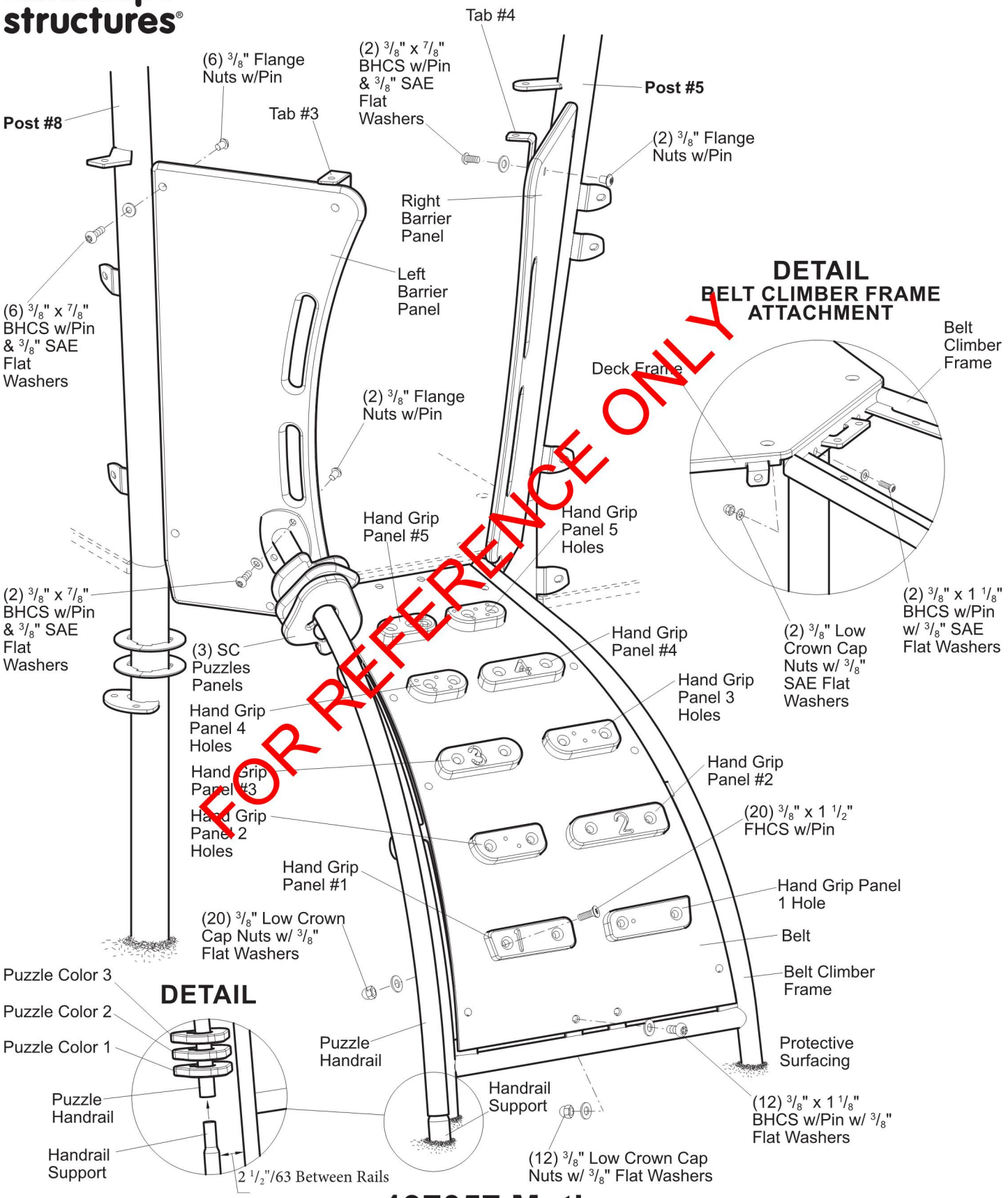

FOR REFERENCE ONLY

197057 Motion

Smart Play®

© 2022 by Landscape Structures. All rights reserved.

Document #30

landscape structures®

Belt Climber

ISO 14001 CERTIFIED

ISO 9001 Certified

SAFETY NOTE
Choose a protective surfacing material that has a Critical Height Value of at least the height of the Highest Accessible Part/Fall Height of the adjacent equipment. (Ref. ASTM F1487.)

Parts List

Part#	Description	Qty.
199551	Hand Grip Panel #1, Specify Color	1
199552	Hand Grip Panel 1 Hole, Specify Color	1
199553	Hand Grip Panel #2, Specify Color	1
199554	Hand Grip Panel 2 Holes, Specify Color	1
199555	Hand Grip Panel #3, Specify Color	1
199556	Hand Grip Panel 3 Holes, Specify Color	1
199557	Hand Grip Panel #4, Specify Color	1
199558	Hand Grip Panel 4 Holes, Specify Color	1
199559	Hand Grip Panel #5, Specify Color	1
199560	Hand Grip Panel 5 Holes, Specify Color	1
292064	Belt Climber Frame, (SM), Specify Color	1
292065	Belt Climber Frame, (DB), Specify Color	1
292062	Belt, Black	1
196971	Puzzle Handrail, Specify Color	1
200273	Handrail Support, (SM), Specify Color	1
196974	Handrail Support, (DB), Specify Color	1
199776	Puzzle Panel Color #1, Specify Color	1
198901	Puzzle Panel Color #2, Specify Color	1
200410	Puzzle Panel Color #3, Specify Color	1
196653	Left Barrier Panel, Specify Color	1
197049	Right Barrier Panel, Specify Color	1
197048	Tab #4, Specify Color	1
197051	Tab #3, Specify Color	1
292067	**Belt Climber Hardware Package**	1
100196	3/8" x 7/8" BHCS w/Pin, SST	10
100198	3/8" x 1 1/8" BHCS w/Pin, SST	10
100365	3/8" SAE Flat Washer, SST	14
100362	3/8" Flat Washer, SST	44
151421	3/8" x 1 1/2" FHCS w/Pin, SST	20
100349	3/8" Low Crown Nut, SST	34
100353	3/8" Flange Nut w/Pin, SST	10

DB = Direct Bury
SM = Surface Mount

Specifications

Belt: Made from .315" (8,00 mm) thick mini rough top 3-ply rubber belting with polyester fabric plys, black in color.

Belt Climber Frame: Weldment comprised of 1.315" (33,40 mm) O.D. RS20 (.080" - .090") (2,03 mm-2,29 mm) galvanized steel tubing, 1/4" (6,35 mm) HRPO steel sheet and 1/8" (.125") (3,18 mm) HRPO steel sheet. Finish: ProShield®, color specified.

Puzzle Handrail: Weldment comprised of 1.315" (33,40 mm) O.D. RS20 (.080" - .090") (2,03 mm-2,29 mm) galvanized steel tubing, and 1/4" (6,35 mm) HRPO steel sheet. Finish: ProShield, color specified.

Handrail Support: Weldment comprised of 1.315" (33,40 mm) O.D. RS20 (.080" - .090") (2,03 mm-2,29 mm) galvanized steel tubing. Finish: ProShield, color specified.

Panels: Recycled Permalene®, color specified.

Fasteners: Primary fasteners shall be socketed and pinned tamperproof in design, stainless steel (SST) per ASTM F 879 unless otherwise indicated (see specific product installation/specifications).

Installation Instructions

1) Attach barrier panels to post tabs and deck frame tabs.
2) Attach belt climber frame to deck frame tabs.
3) Attach belt to frame.
4) Attach hand grip panels to belt.
5) Slide puzzle color panels onto puzzle handrail. Insert handrail support into puzzle handrail. Attach puzzle handrail to left barrier panel.

FOR REFERENCE ONLY

ECO-0102119 Install 30748700 replaces 28529800. Belt climber part change and new hardware

© 2022 by Landscape Structures. All rights reserved.

landscape structures®

ISO 14001 CERTIFIED

ISO 9001 Certified

SAFETY N

Choose a protective surf[illegible] has a Critical Height Value of at least the height of the Highest Accessible Part/Fall Height of the adjacent equipment. (Ref. ASTM F1487.)

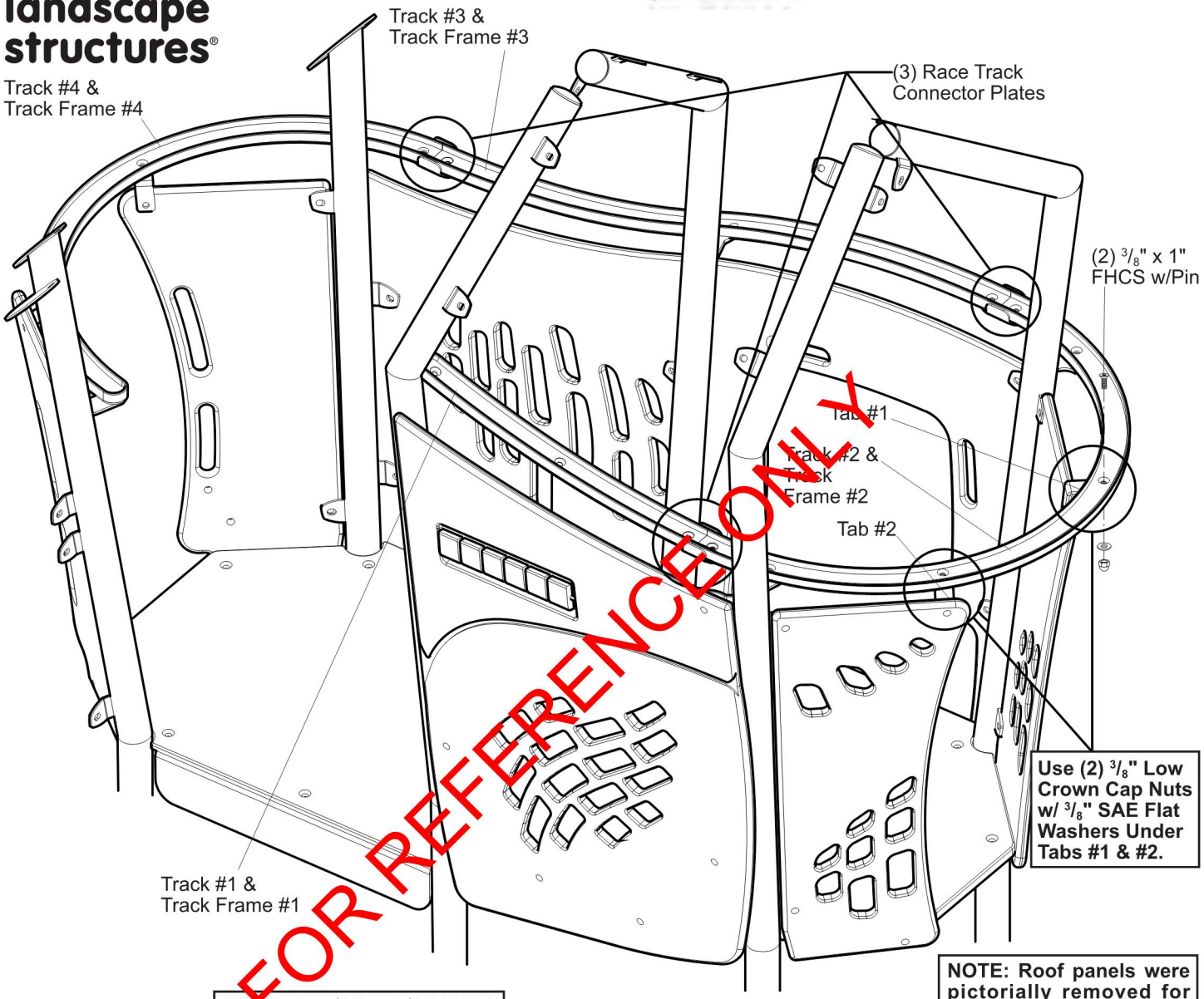

FOR REFERENCE ONLY

DETAIL
RACE TRACK ATTACHMENT

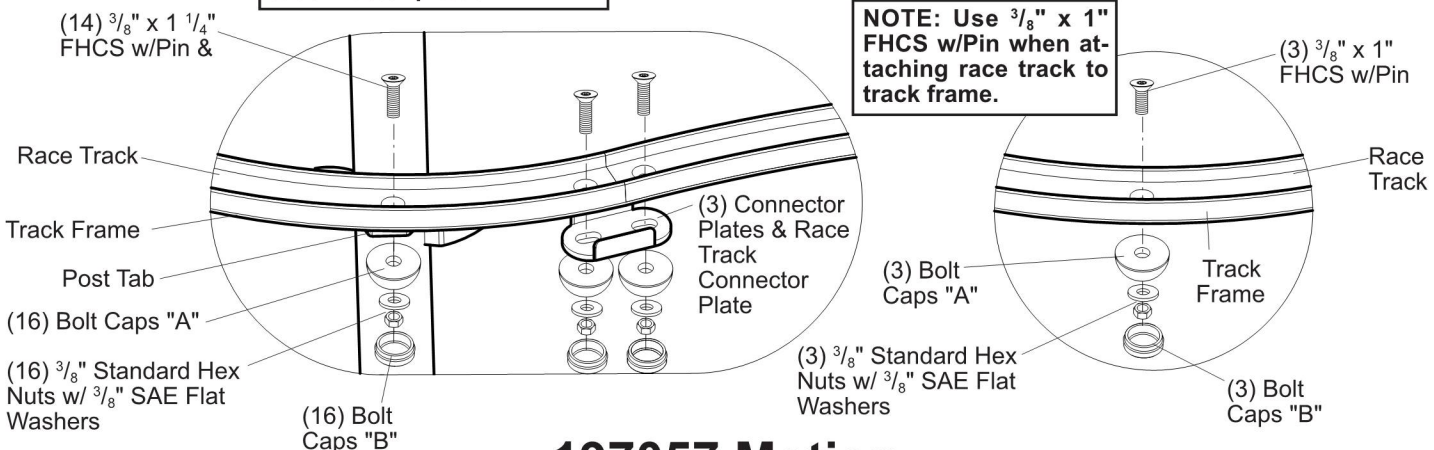

Smart Play®

197057 Motion

© 2022 by Landscape Structures. All rights reserved.

Document #30[illegible]

landscape structures®

ISO 14001 CERTIFIED

ISO 9001 Certified

SAFETY NOTE

Choose a protective surfacing material that has a Critical Height Value of at least the height of the Highest Accessible Part/Fall Height of the adjacent equipment. (Ref. ASTM F1487.)

Race Track

Parts List

Part#	Description	Qty.
230700	Race Track #1, Black	1
230702	Race Track #2, Black	1
230701	Race Track #3, Black	1
230703	Race Track #4, Black	1
196996	Race Track Frame #1, Specify Color	1
197000	Race Track Frame #2, Specify Color	1
197124	Race Track Frame #3, Specify Color	1
197132	Race Track Frame #4, Specify Color	1
201088	Race Track Connector Plate, Specify Color	3
200966	**Race Track Hardware Package**	1
100252	3/8" x 1 1/4" FHCS w/Pin, SST	14
137091	3/8" x 1" FHCS w/Pin, SST	5
108184	Bolt Cap Part A, White	17
108185	Bolt Cap Part B, White	17
100349	3/8" Low Crown Cap Nut, SST	2
100327	3/8" Standard Hex Nut, SST	17
100365	3/8" SAE Flat Washer, SST	19

Specifications

Race Track: Permalene®, black in color.

Connector Plate: Fabricated from 1/4" (6,35 mm) HRPO steel sheet. Finish: ProShield®, color specified.

Race Track Tab: Fabricated from 7 GA. (.179") (4,55 mm) HRPO steel sheet. Finish: ProShield, color specified.

Race Track Frame: Fabricated from 1/8" (.125") (3,18 mm) HRPO steel sheet. Finish: ProShield, color specified.

Fasteners: Primary fasteners shall be socketed and pinned tamperproof in design, stainless steel (SST) per ASTM F 879 unless otherwise indicated (see specific product installation/specifications).

Installation Instructions

1) Attach track frames and race tracks to posts and panel tabs. Refer to the Race Track Attachment Detail.

2) Install protective surfacing before users are allowed to play on the structure.

FOR REFERENCE ONLY

© 2022 by Landscape Structures. All rights reserved.

landscape structures®

ISO 14001 CERTIFIED ISO 9001 Certified

21325600

DETAIL
SIGN ATTACHMENT

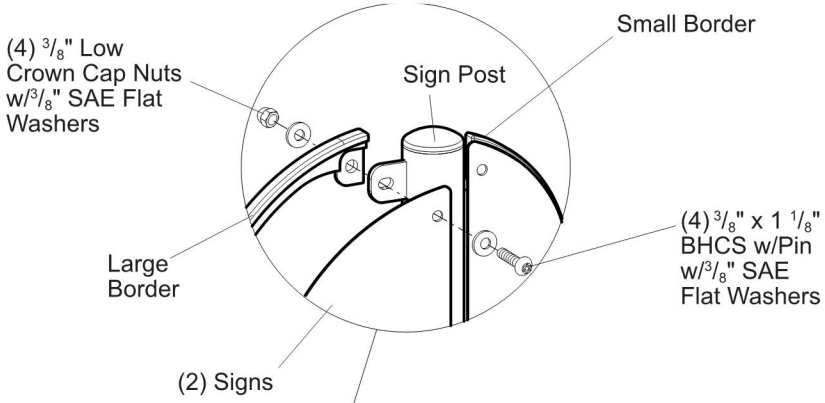

DETAIL
SURFACE MOUNT

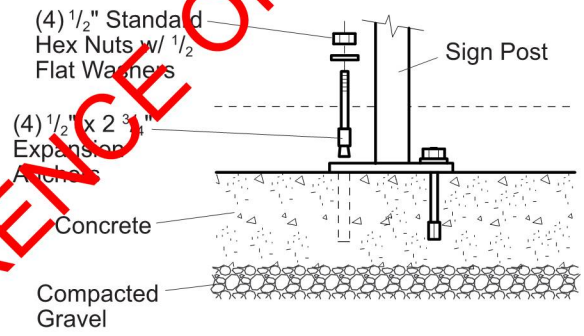

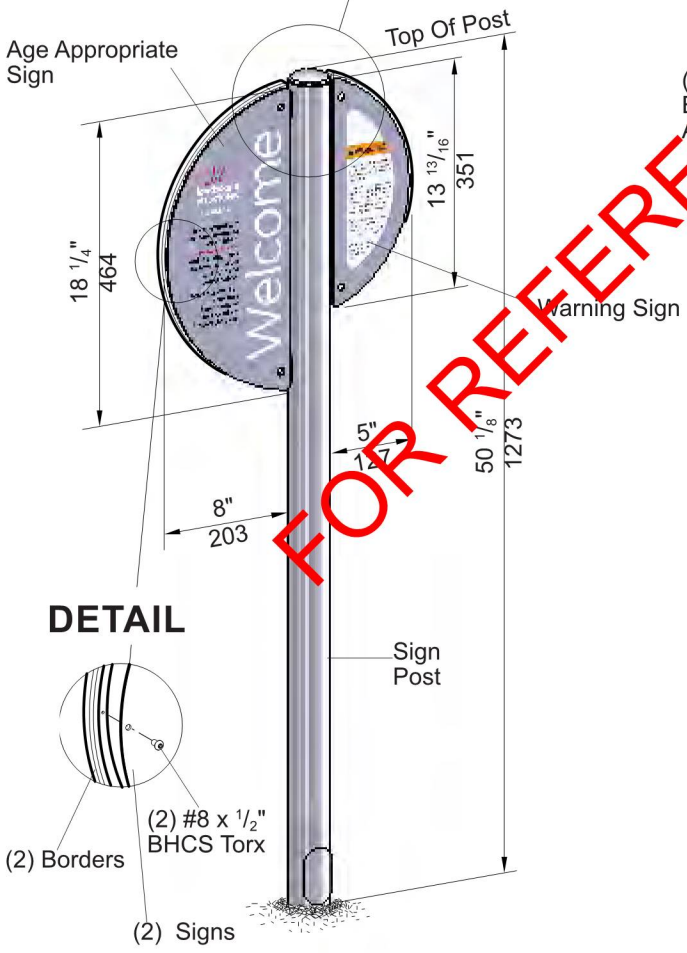

DETAIL

DETAIL
DIRECT BURY FOOTING

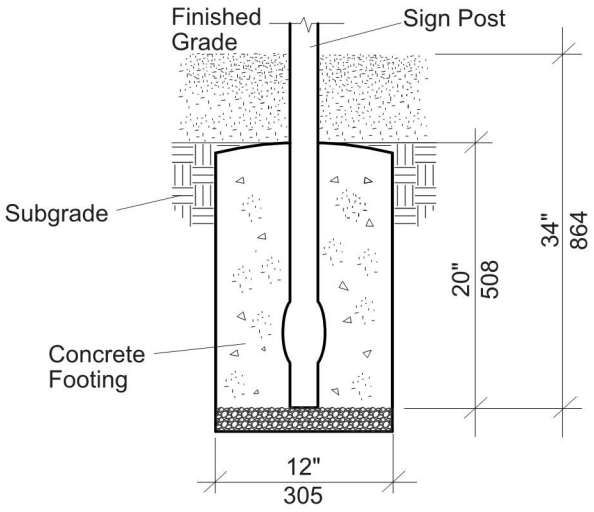

FOR REFERENCE ONLY

Model 182503 - Landscape Structures Provided Welcome Sign
Model 182504 - Welcome Sign

© 2016 by Landscape Structures. All rights reserved.

landscape structures®

Parts List

Part#	Description	Qty.
219911	Warning Sign,Gray	1
219912	Age Appropriate Sign, 2-12 Years, Gray	*
219913	Age Appropriate Sign, 2-5 Years, Gray	*
219914	Age Appropriate Sign, 5-12 Years, Gray	*
219915	Age Appropriate Sign, 1 1/2-5 Years, Gray	*
219916	Age Appropriate Sign, 1 1/2-12 Years, Gray	*
219918	Age Appropriate Sign, 6-23 Months, Gray	*
180598	Sign Post (DB), Specify Color	*
181119	Sign Post (SM), Specify Color	*
193782	Large Border, Black	1
193783	Small Border, Black	1
213258	**Age/Warning Sign Hardware Package**	1
100198	3/8" x 1 1/8" BHCS w/Pin, SST	4
100349	3/8" Low Crown Cap Nut, SST	4
100365	3/8" SAE Flat Washer, SST	8
168323	#8 x 1/2" BHCS Torx, SST	2
169413	1/4-6 Lobe T-15 Tamp. Bit	1
121348	**4 Hole (SM) Hardware Package**	1
100266	1/2" x 2 3/4" Expansion Anchor	4
100322	1/2" Standard Hex Nut, SST	4
100363	1/2" Flat Washer, SST	4

DB = Direct Bury
SM = Surface Mount
*** = Quantity Determined By Your Order**

Specifications

Sign Panel: Panel is fabricated from 1/8" (.125")(3,17 mm) aluminum plate. Finish: ProShield®, gray in color. **(Sign)** Digital image is transfered to a 1/8" (.125")(3,17 mm) ProShield coated aluminum plate, then infused into the ProShield.

Border: Permalene, black in color.

Post: Weldment comprised 2.375" (60,33 mm) O.D. RS20 (.095-.105) (2,41 mm-2,67 mm) wall galvanized tube, 1/4" (6,35 mm) HDPO steel sheet and aluminum post cap. Finish: ProShield, color specified.

Fasteners: Primary fasteners shall be socketed and pinned tamperproof in design, stainless steel (SST) per ASTM F 879 unless otherwise indicated (see specific product installation/specifications).

Installation Time: **(DB)** Approx. 1 man hour
(SM) Approx. 1/2 man hour

Concrete Req: Approx. 1.31 cu. ft.

Weight: **(DB)** - 24 lbs.
(SM) - 27 lbs.

Installation Instructions

Direct Bury

1) Dig footing hole to depth and diameter shown.
2) Attach sign panels and borders to post as shown, using 3/8" x 1 1/8" BHCS with 3/8" SAE flat washers and 3/8" low crown cap nuts with 3/8" SAE flat washers. Attach signs to borders using #8 x 1/2" BHCS Torx.
3) Set sign assembly in footing hole and temporarily brace in plumb position.
4) Pour concrete footing. After concrete has cured, remove bracing.

Surface Mount

1) Attach sign panels and borders to post as shown, using 3/8" x 1 1/8" BHCS with 3/8" SAE flat washers and 3/8" low crown cap nuts with 3/8" SAE flat washers. Attach signs to borders using #8 x 1/2" BHCS Torx.
2) With sign in proper position, using a 1/2" masonry bit and hammer drill, drill 3" deep holes into concrete slab through holes in post plate. Tap 1/2" x 2 3/4" expansion anchors into holes and secure using 1/2" standard hex nuts with 1/2" flat washers.

FOR REFERENCE ONLY

landscape structures®

ISO 14001 CERTIFIED

ISO 9001 Certified

SAFETY N

Choose a protective surf has a Critical Height Value of at least the height of the Highest Accessible Part/Fall Height of the adjacent equipment. (Ref. ASTM F1487.)

22134100

PLAN VIEW/FOOTING LAYOUT

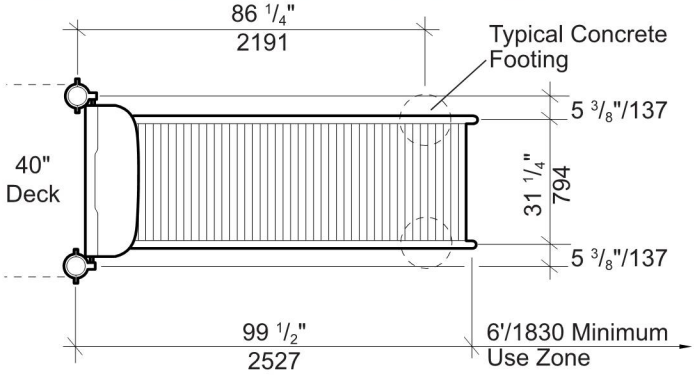

ELEVATION

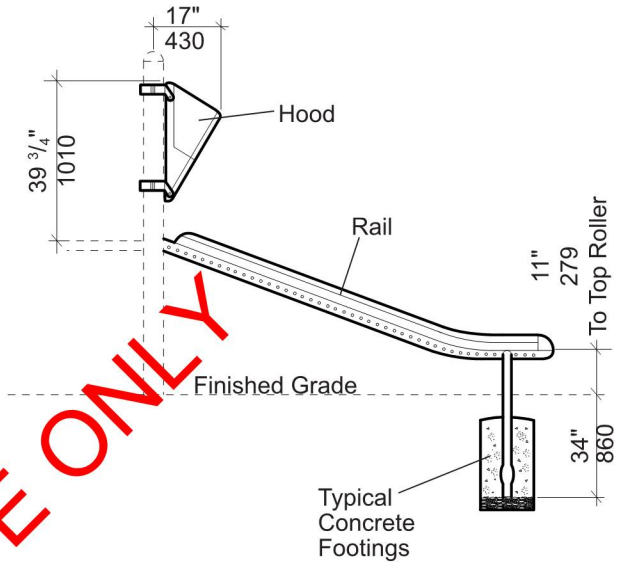

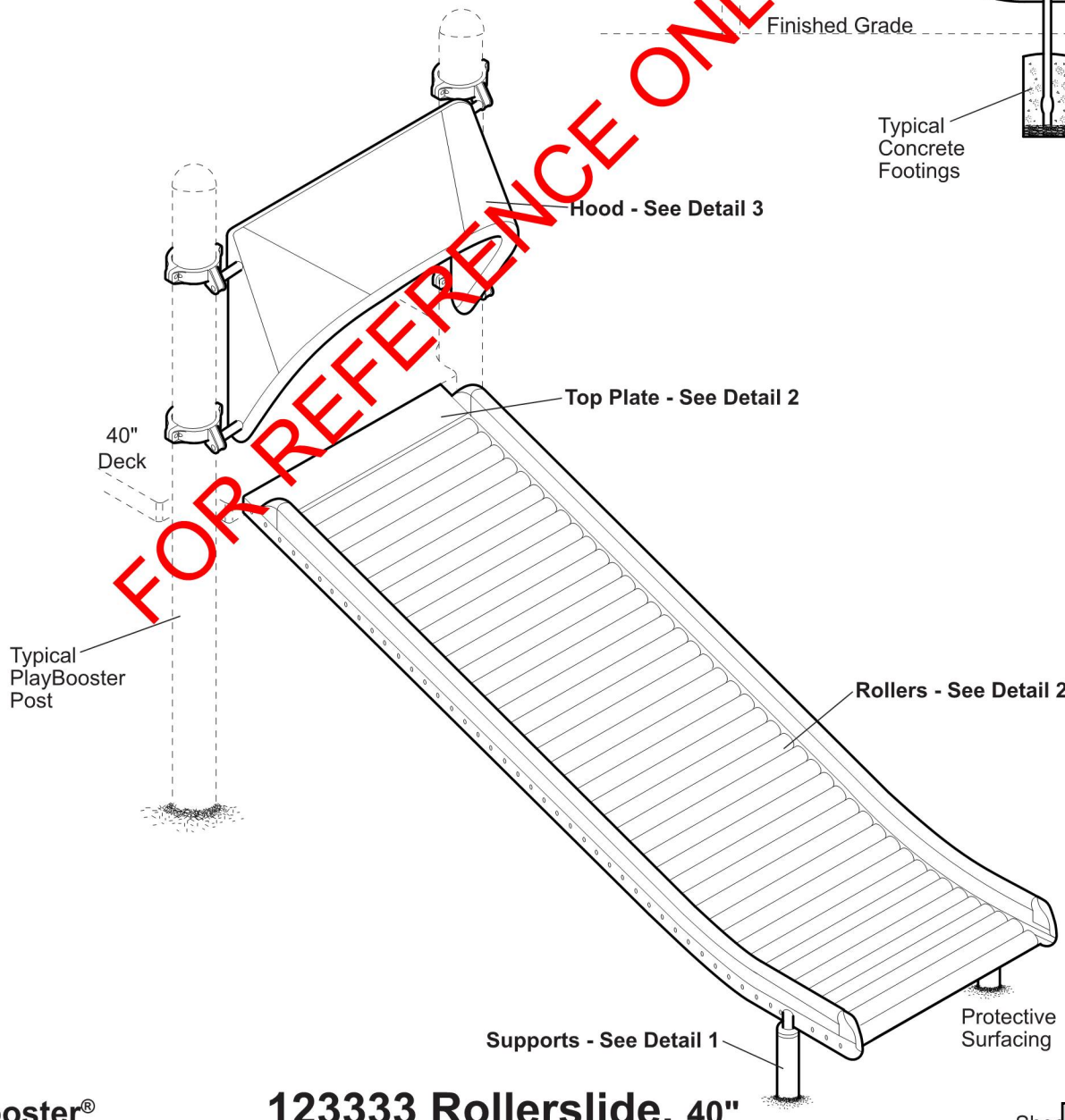

FOR REFERENCE ONLY

PlayBooster®

123333 Rollerslide, 40"

601 7TH STREET SOUTH, DELANO, MINNESOTA 55328-8605 888-574-4678 LSI Install Help 888-438-6574 LSI Direct 763-972-5200 Int. FAX (763)

© 2016 by Landscape Structures. All rights reserved.

SAFETY NOTE

Choose a protective surfacing material that has a Critical Height Value of at least the height of the Highest Accessible Part/Fall Height of the adjacent equipment. (Ref. ASTM F1487.)

221341a

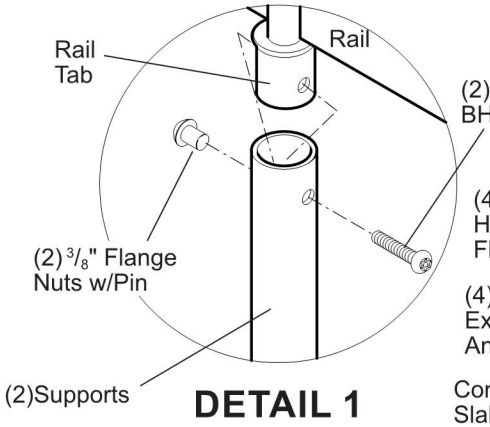

DETAIL 1
SUPPORTS

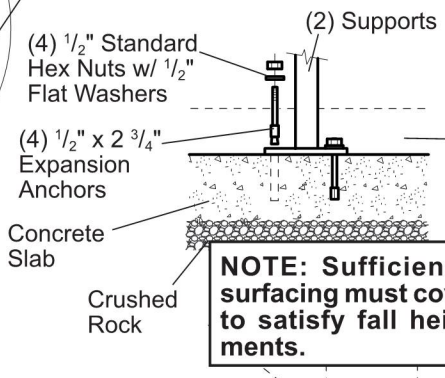

DETAIL
SURFACE MOUNT

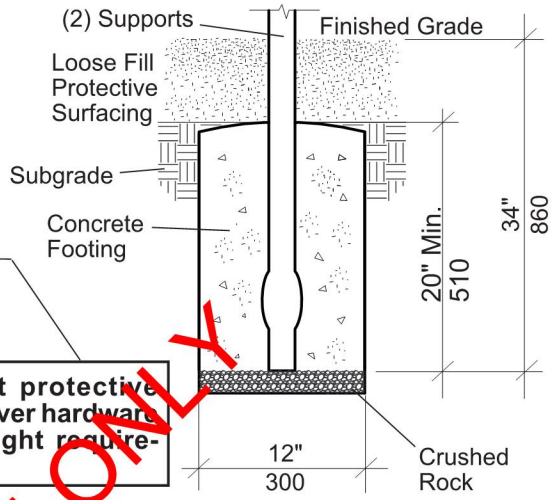

DETAIL
DIRECT BURY

NOTE: Sufficient protective surfacing must cover hardware to satisfy fall height requirements.

FOR REFERENCE ONLY

DETAIL 2
TOP PLATE & ROLLERS

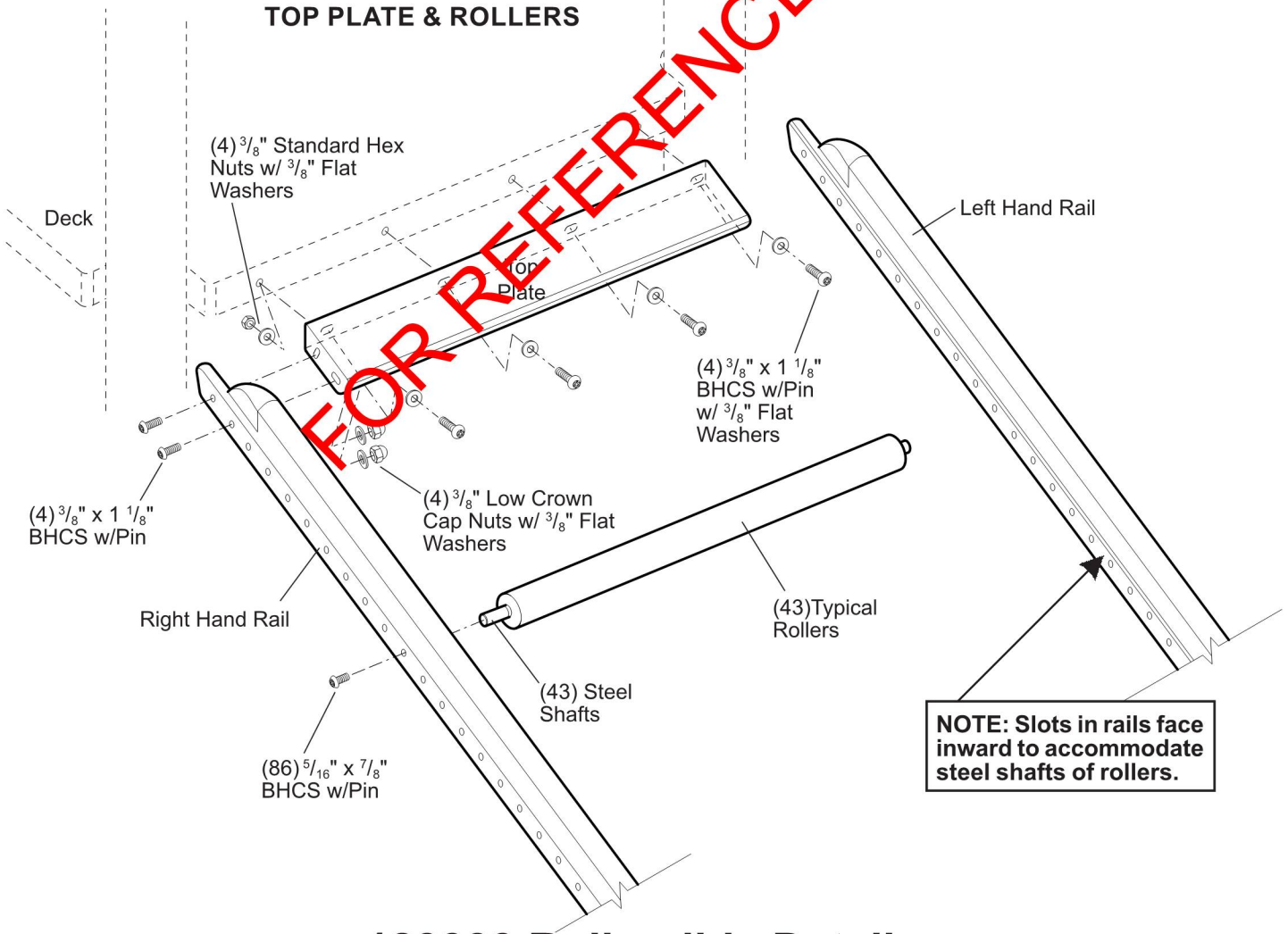

NOTE: Slots in rails face inward to accommodate steel shafts of rollers.

PlayBooster® 123333 Rollerslide Details, 40"

© 2016 by Landscape Structures. All rights reserved.

landscape structures®

DETAIL 3
ROLLERSLIDE HOOD

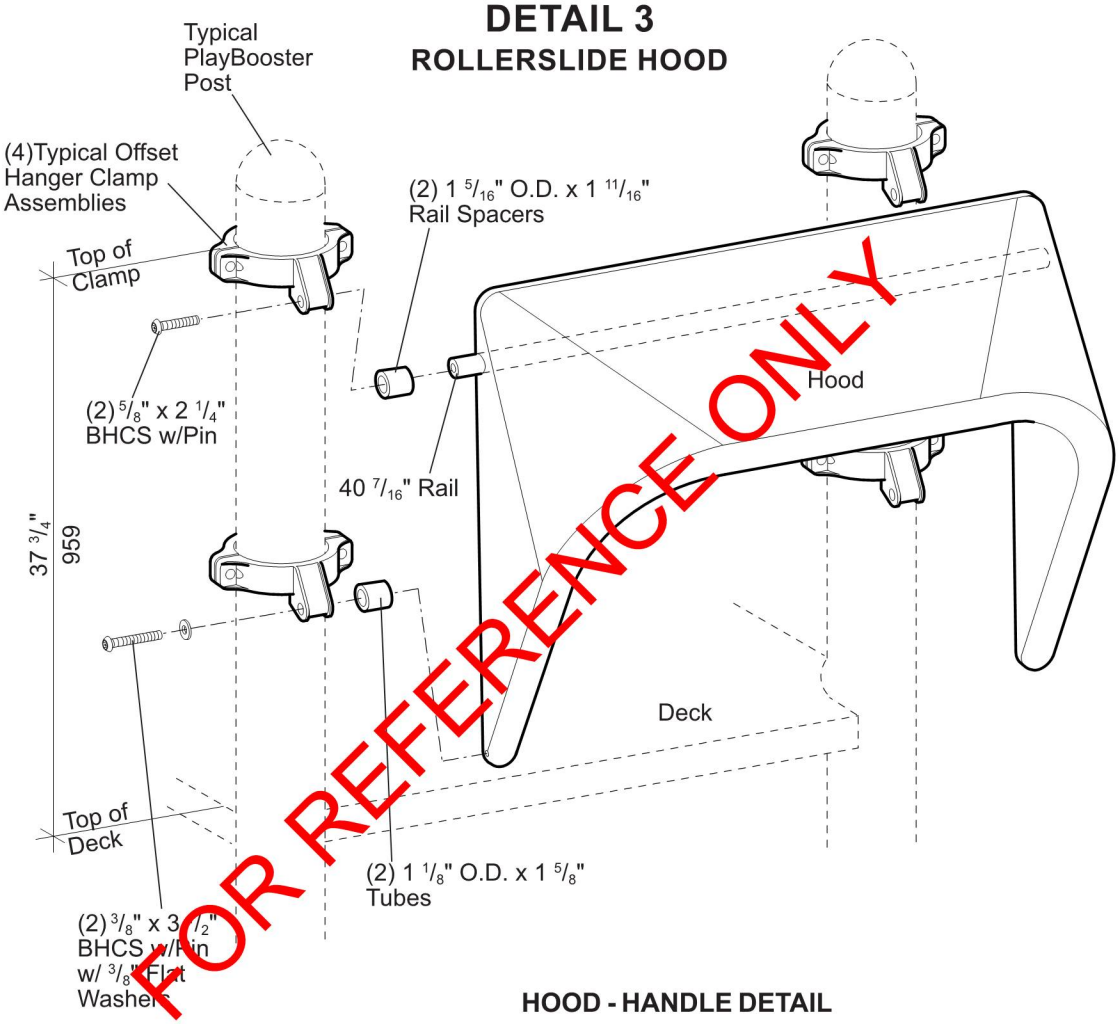

FOR REFERENCE ONLY

HOOD - HANDLE DETAIL

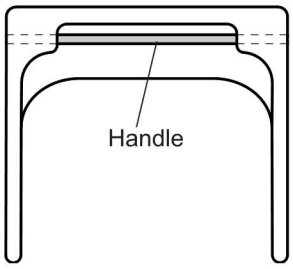

© 2016 by Landscape Structures. All rights reserved.

PlayBooster® 123333 Rollerslide,

landscape structures®

Parts List

Part#	Description	Qty.
103977	Support, (DB), Specify Color	2
103088	Support, (SM), Specify Color	2
104278	30 3/8" Roller Shaft	43
115347	Roller Assembly, Specify Color	43
135145	Top Plate, Specify Color	1
126957	Double Slide Hood, Specify Color	1
100583	40 7/16" Rail, Specify Color	1
105288	1 1/8" O.D. x 1 5/8" Tube, Specify Color	2
105327	5" Half Clamp, Specify Color	4
113729	Offset Hanger Clamp, Specify Color	4
167131	Rail 40" Rollerslide (RH), Specify Color	1
167132	Rail 40" Rollerslide (LH), Specify Color	1
132443	Rail Spacer, Specify Color	2
106577	**Double Slide Hood Hardware Package**	1
100198	3/8" x 1 1/8" BHCS w/Pin, SST	8
100200	3/8" x 3 1/2" BHCS w/Pin, SST	2
100203	5/8" x 2 1/4" BHCS w/Pin, SST	2
100351	3/8" Tee Nut, SST	8
100362	3/8" Flat Washer, SST	2
100610	1/4" x 5/8" Drive Rivet, AL/SST	4
221339	**Rollerslide 40" Deck Hardware Package**	1
123224	3/8" x 1 11/16" BHCS w/Pin, SST	2
132626	5/16" x 7/8" BHCS w/Pin, SST	86
100198	3/8" x 1 1/8" BHCS w/Pin, SST	8
100327	3/8" Standard Hex Nut, SST	4
100353	3/8" Flange Nut w/Pin, SST	2
100362	3/8" Flat Washer, SST	12
100349	3/8" Low Crown Cap Nut, SST	4
121348	**4-Hole (SM) Hardware Package**	1
100266	1/2" x 2 3/4" Expansion Anchor	4
100322	1/2" Standard Hex Nut, SST	4
100363	1/2" Flat Washer, SST	4

DB = Direct Bury
SM = Surface Mount
(LH) = Left Hand
(RH) = Right Hand

Specifications

Hood: Rotationally molded from U.V. stabilized linear low density polyethylene, color specified.

Rollers: Fabricated from 1.900" O.D. x 16 GA (.060") galvanized steel tubing. Finish: TenderTuff™, color specified.

Roller Shafts: Fabricated from 1/2" diameter CRS zinc-plated with yellow chromate finish.

Support Leg: Fabricated from 1.900" O.D. RS-20 (.090" - .100") galvanized steel tubing. Finish: ProShield®, color specified.

Rails: Extruded from 6005-T1 aluminum. Finish: ProShield, color specified.

Top Plate: Formed from 10 GA (.135") 304-2B SST. Finish: TenderTuff, color specified.

Rail: 1 1/8" O.D. 6005-T5 aluminum extrusion with 5/16" walls. Finish: ProShield, color specified.

Rail Spacer: Fabricated from 1.3125 O.D. x 16 Ga. (.065) steel tubing. Finish: ProShield, color specified.

Tube: 1 1/8" O.D. x 1 5/8" long aluminum tube. Finish: ProShield, color specified.

Offset Hanger Clamp Assembly: Cast aluminum. Finish: ProShield, color specified.

Fasteners: Primary fasteners shall be socketed and pinned tamperproof in design, stainless steel (SST) per ASTM F 879 unless otherwise indicated (see specific product installation/specifications).

Installation Time: Approx. 4 1/2 man hours
Concrete Req.: Approx. 2.6 cu. ft.
Exit Req.: 6' (1,83 m) minimum use zone at exit
Weight: 361 lbs.
Fall Height: 40" (1,02 m)

FOR REFERENCE ONLY

Installation Instructions

1) **(Direct Bury)** Dig footing holes spaced as shown.

2) Attach the supports to bottom of rails as shown in Detail 1, using 3/8" x 1 11/16" BHCS w/Pin with 3/8" flange nuts w/Pin. **NOTE:** *Insert flange nuts w/Pin through side facing deck.*

3) Attach top plate to deck, as shown in Detail 2, using 3/8" x 1 1/8" BHCS w/Pin with 3/8" flat washers and 3/8" standard hex nuts with 3/8" flat washers.

4) Locate left and right rollerslide rails and attach to top plate using 3/8" x 1 1/8" BHCS w/Pins and 3/8" low crown cap nuts with 3/8" flat washers, as shown in Detail 2,

5) Insert the 30 3/8" steel roller shafts into the rollers. Starting at top, next to the top plate, attach all roller assemblies to rails, as shown in Detail 2, using 5/16" x 7/8" BHCS w/Pins.

6) Insert 40 7/16" rail through top of hood, place rail spacer tube on each end of the 40 7/16" rail and attach to posts at height shown using offset hanger clamp assemblies. Refer to the Typical Offset Hanger Clamp Spec Sheet. Fasten bottom of hood to offset hanger clamp assemblies using 3/8" x 3 1/2" BHCS w/Pins with 3/8" flat washers through clamp and 1 1/8" O.D. x 1 5/8" tubes and into threaded inserts in hood. Refer to Detail 3.

7) **(Direct Bury)** With supports plumb pour concrete footings. Allow concrete footings to cure for a minimum of 72 hours before users are allowed to play on the structure.

   (Surface Mount) Mark anchor bolt locations on concrete slab through holes in anchor plate and remove rollerslide. Drill 1/2" x 3" deep holes on marks into concrete using a hammer drill and 1/2" masonry bit. Tap expansion anchors into drilled holes. Reposition rollerslide and reattach to the face of the deck following step 3. Fasten support to expansion anchors using 1/2" standard hex nuts with 1/2" flat washers.

8) Install 1/4" x 5/8" drive rivets in all 5" half clamps. Refer to the Typical Offset Hanger Clamp Spec Sheet.

9) Install protective surfacing before users are allowed to play on the structure.

Specifications are subject to change without notice.

Eco #0100779 Document #22134100 replaces #16702900. Replaced rollerslide hardware package.

landscape structures®

ISO 14001 CERTIFIED

ISO 9001 Certified

SAFETY NOTE

Choose a protective surfacing ma
has a Critical Height Value of at least the height of the Highest Accessible Part/Fall Height of the adjacent equipment. (Ref. *ASTM F1487*.)

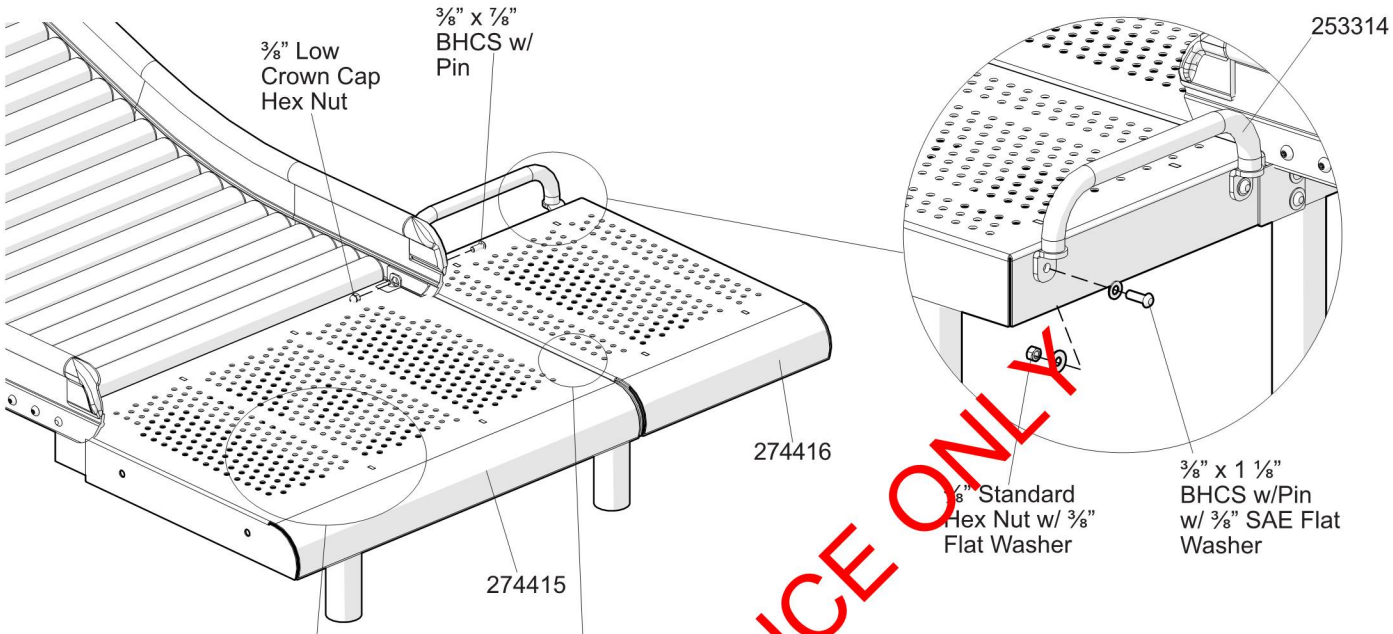

FOR REFERENCE ONLY

DETAIL
DECK ATTACHMENT

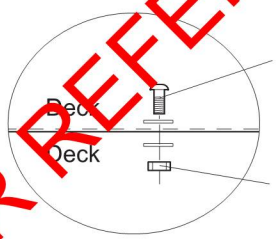

DETAIL
FOOTER ATTACHMENT

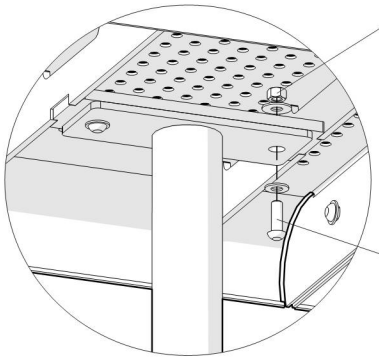

NOTE: This transfer area is a two deck design and the smaller side deck can be mounted on either the left side or the right side of the larger centered deck.

Custom 56" Rollerslide Flush Xfer

601 7TH STREET SOUTH, DELANO, MINNESOTA 55328-8605 888-574-4678 LSI Install Help 888-438-6574 LSI Direct 763-972-5200 Int. FAX (763) 972-318

© 2021 by Landscape Structures. All rights reserved.

landscape structures®

ISO 14001 CERTIFIED

ISO 9001 Certified

SAFETY NOTE

Choose a protective surfacing ma
has a Critical Height Value of at least the height of the Highest Accessible Part/Fall Height of the adjacent equipment. (Ref. *ASTM F1487*.)

Parts List

PART NUMBER	DESCRIPTION	QTY.
289333	CUST TRANSFER BENCH FOR ROLLERSLIDE EXIT HDW	1
289233	CUST 56i RSLIDE FLUSH XFER INST	1
274416	ROLLER SLIDE SIDE DECK PVC	1
274415	ROLLER SLIDE CENTER DECK PVC	1
253383	ROLLER SLIDE BACK PLATE	1
253382	ROLLER SLIDE RAIL SPACER	2
253314	ROLLER SLIDE EXIT HANDLE	1
253312	ROLLER SLIDE FOOTER DB	2
100365	WASHER FLAT SAE 3/8i SST	8
100362	WASHER FLAT 3/8i SST	12
100327	HEX NUT STD 3/8-16 SST	10
100198	BHCS 6LP 3/8x1-1/8i SST	10
100196	BHCS 6LP 3/8x7/8i SST	2

FOR REFERENCE ONLY

Installation Instructions

1) Assemble structure following steps and details shown. Use 2D layout as a reference.

   Direct Bury - With structure square, plumb and level, pour concrete footings. Allow concrete to cure a minimum of 72 hours before users are allowed to play on the structure.

2) Install protective surfacing before users are allowed to play on the structure.

© 2021 by Landscape Structures. All rights reserved.

BUTTERFLY - INSTALLATION GUIDE

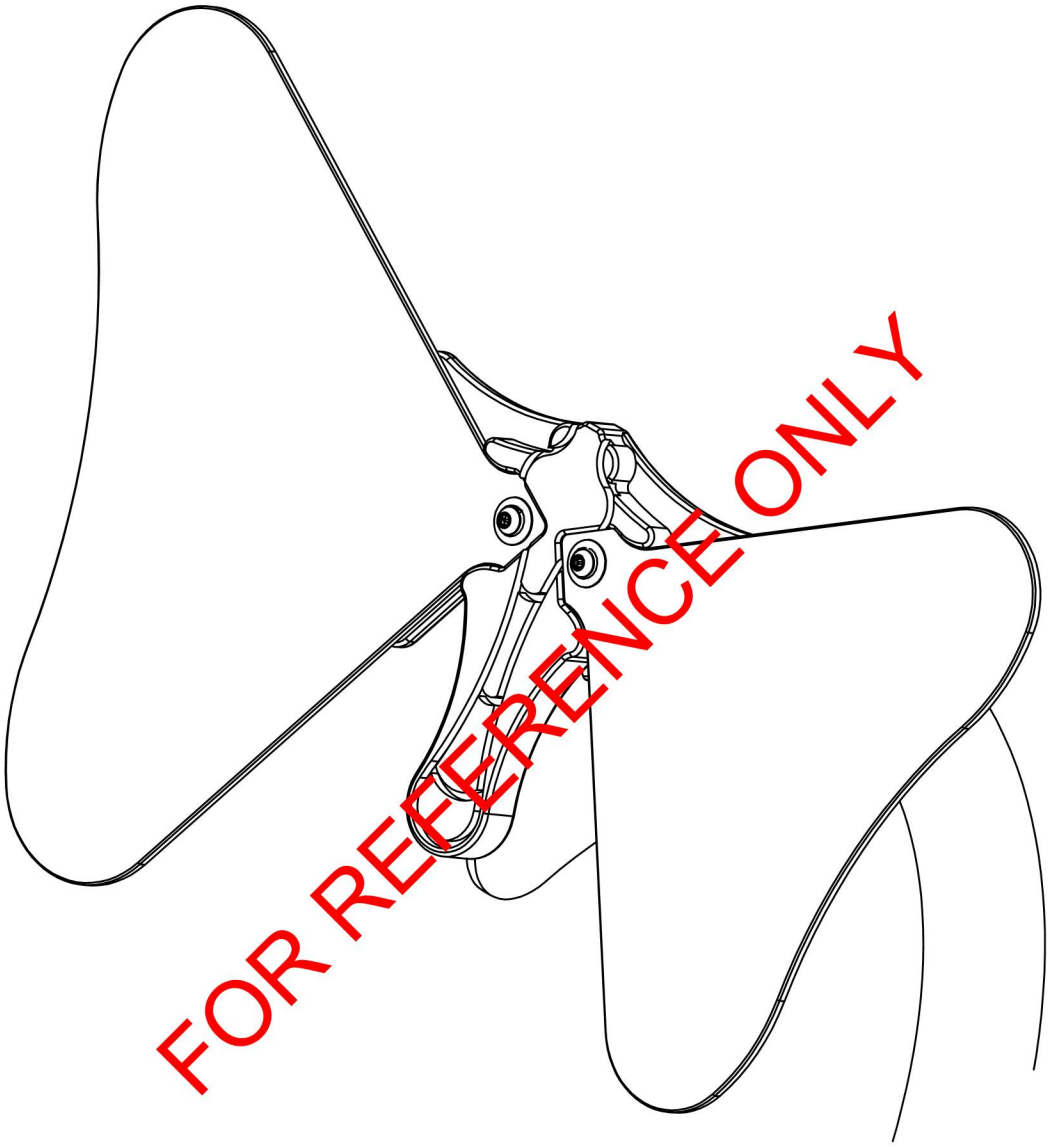

FOR REFERENCE ONLY

SPECS AND MATERIALS

	INDIGO	ORANGE	TURQUOISE	YELLOW
IN GROUND MOUNT				
HEIGHT	53-3/4"	51-1/2"	49-1/4"	46-3/4"
WIDTH	20-3/8"	19-1/4"	17-5/8"	16"
DEPTH	16-1/8"	15"	13-7/8"	12-5/8"
WEIGHT	29 LBS	28 LBS	27 LBS	26 LBS
PACKAGED WEIGHT	38 LBS	37 LBS	36 LBS	35 LBS
SURFACE MOUNT				
HEIGHT	53-3/4"	51-1/2"	49-1/4"	46-3/4"
WIDTH	20-3/8"	19-1/4"	17-5/8"	16"
DEPTH	16-1/8"	15"	13-7/8"	12-5/8"
WEIGHT	18 LBS	17 LBS	16 LBS	15 LBS
PACKAGED WEIGHT	27 LBS	26 LBS	25 LBS	24 LBS
PORTABLE MOUNT				
HEIGHT	53-3/4"	51-1/2"	49-1/4"	46-3/4"
WIDTH	20-3/8"	19-1/4"	17-5/8"	16"
DEPTH	16-1/8"	15"	13-7/8"	12-5/8"
WEIGHT	27 LBS	26 LBS	25 LBS	24 LBS
PACKAGED WEIGHT	36 LBS	35 LBS	34 LBS	33 LBS
MATERIALS				
THORAX	HDPE	HDPE	HDPE	HDPE
POST	POWDER COATED STEEL	POWDER COATED STEEL	POWDER COATED STEEL	POWDER COATED STEEL
HARDWARE	STAINLESS STEEL	STAINLESS STEEL	STAINLESS STEEL	STAINLESS STEEL
WINGS	ANODIZED ALUMINUM	ANODIZED ALUMINUM	ANODIZED ALUMINUM	ANODIZED ALUMINUM

FOR REFERENCE ONLY

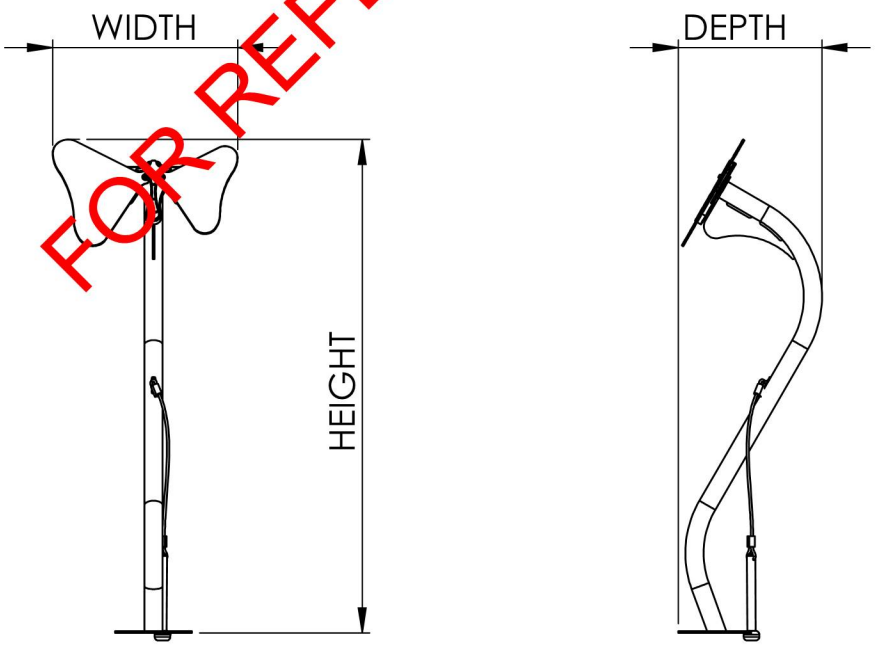

RECOMMENDED LAYOUTS

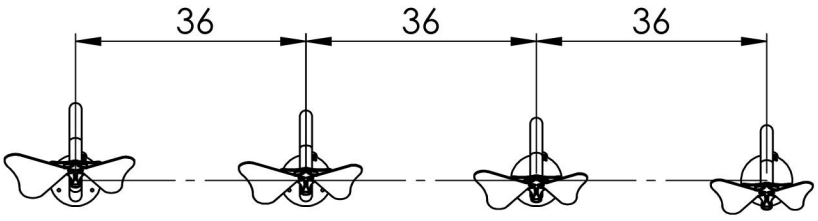

STRAIGHT LAYOUT

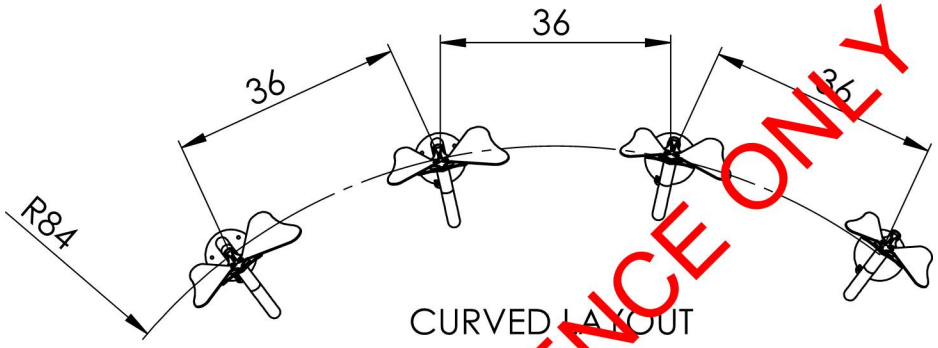

CURVED LAYOUT

FOR REFERENCE ONLY

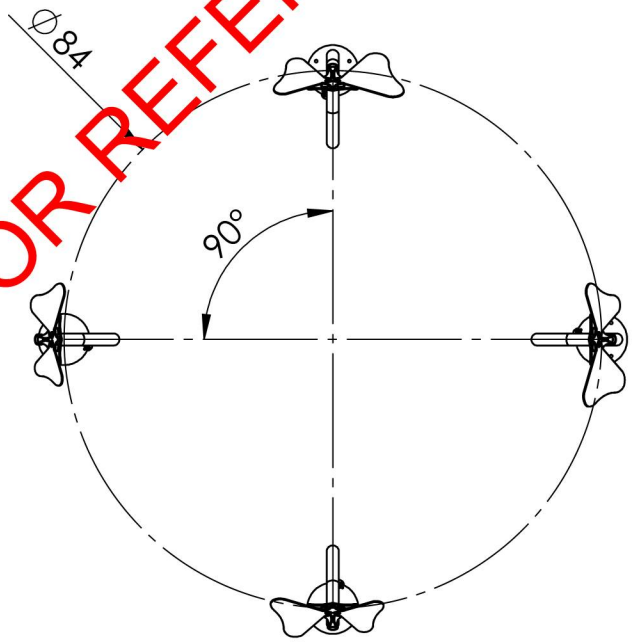

CIRCLE LAYOUT

PRE-INSTALL

ITEM NO.	PART NUMBER	DESCRIPTION	INDIGO	ORANGE	TURQUOISE	YELLOW
1	BFLY-THORAX	BUTTERFLY - HDPE THORAX (.75" BLACK/WHITE/BLACK)	1	1	1	1
2	BFLY-POST-4-FP	BUTTERFLY - ZINC TUBE POST 4 (POWDER-COATED)	1	-	-	-
3	BFLY-POST-3-FP	BUTTERFLY - ZINC TUBE POST 3 (POWDER-COATED)	-	1	-	-
4	BFLY-POST-2-FP	BUTTERFLY - ZINC TUBE POST 2 (POWDER-COATED)	-	-	1	-
5	BFLY-POST-1-FP	BUTTERFLY - ZINC TUBE POST 1 (POWDER-COATED)	-	-	-	1
6	BFLY-WING-1	BUTTERFLY - ALUMINUM WING 1 (INDIGO) C	1	-	-	-
7	BFLY-WING-2	BUTTERFLY - ALUMINUM WING 2 (ORANGE) D	-	1	-	-
8	BFLY-WING-3	BUTTERFLY - ALUMINUM WING 3 (TURQUOISE) F	-	-	1	-
9	BFLY-WING-4	BUTTERFLY - ALUMINUM WING 4 (INDIGO) G	1	-	-	-
10	BFLY-WING-5	BUTTERFLY - ALUMINUM WING 5 (YELLOW) A	-	-	-	1
11	BFLY-WING-6	BUTTERFLY - ALUMINUM WING 6 (ORANGE) A	-	1	-	-
12	BFLY-WING-7	BUTTERFLY - ALUMINUM WING 7 (TURQUOISE) C	-	-	1	-
13	BFLY-WING-8	BUTTERFLY - ALUMINUM WING 8 (YELLOW) E	-	-	-	1
14	25C100MBTS	1/4"-20 BUTTON HEAD SCREW, 1"LG. SS,T27 TAMP	2	2	2	2
15	92147A029	0.487"OD 0.26"ID 316 SS SPLIT LOCK WASHER FOR 1/4" BOLTS	2	2	2	2
16	94709A416	18-8 STAINLESS STEEL WITH NEOPRENE RUBBER SEALING WASHER	2	2	2	2
17	91870A238	#10-24 FLAT HEAD MACHINE SCREW, .375"LG. SS, T25 TAMP	2	2	2	2
18	FHP-RG-SS	SS ROPE GUIDE	1	1	1	1
19	MA-80BLK-33	MALLET-80A-BLACK-19" CABLE 30" CONSUMED	1	1	1	1

FOR REFERENCE ONLY

1) Apply thread locking fluid. Apply two drops of Loctite to the ends of the threads of (1) 1/4"-20 Button Head Screw.

2) Assemble large wing and thorax. Begin to assemble the instrument by stacking the bolt, lock washer, washer, large wing, and thorax. Place the thorax onto the frame so that the bolt fits through the hole in the frame.

3) Fasten wings. Position the locking hex nut behind the bolt on the back of the frame. With two people, use the tamper resistant torx bit and an adjustable wrench to drive the 1/4"-20 Button Head Screw through the frame and into the locking hex nut. Repeat the steps above for the small wing. Pre-installation complete.

PRE-INSTALL (CONT.)

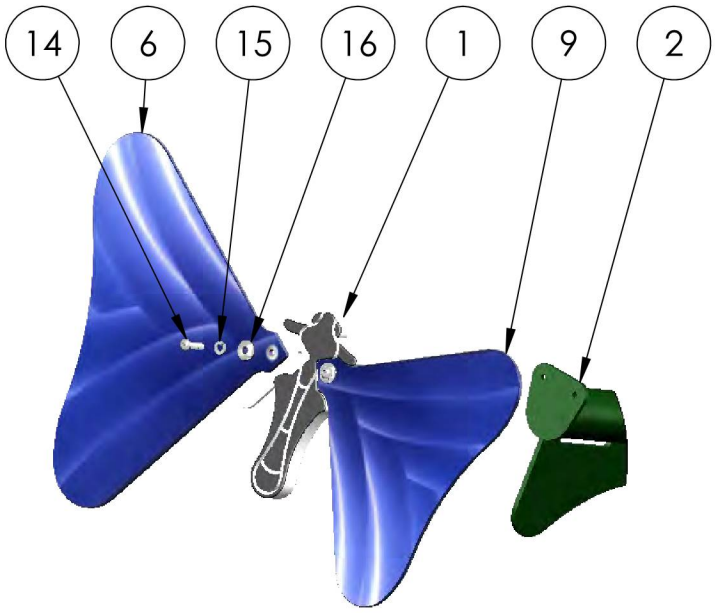

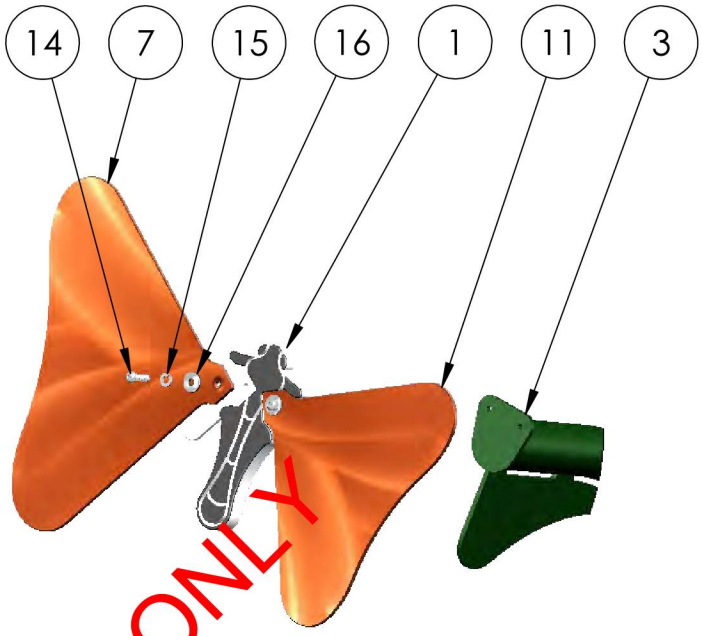

FOR REFERENCE ONLY

NOTE: LARGE WING ALWAYS GOES ON LEFT SIDE



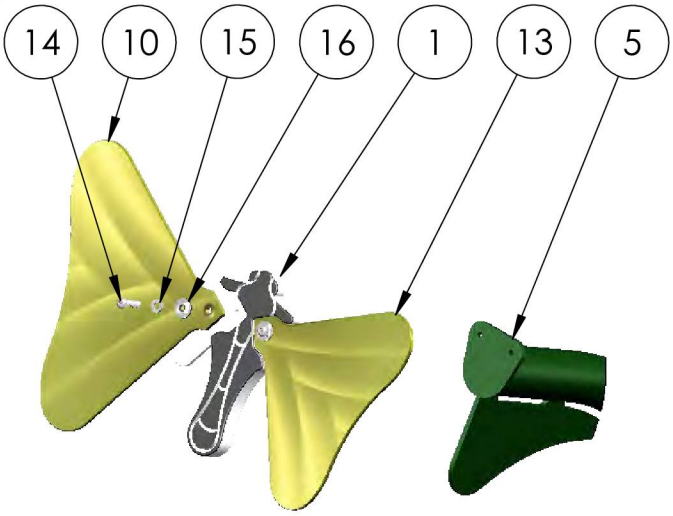

IN GROUND MOUNT

ITEM NO.	DESCRIPTION	BFLY-I-IG	BFLY-O-IG	BFLY-T-IG	BFLY-Y-IG
20	Pre-Assembly - Indigo Butterfly Instrument	1	-	-	-
21	Pre-Assembly - Orange Butterfly Instrument	-	1	-	-
22	Pre-Assembly - Turquoise Butterfly Instrument	-	-	1	-
23	Pre-Assembly - Yellow Butterfly Instrument	-	-	-	1
24	3/8"-16 Hex Head Screw, 1"lg. SS	3	3	3	3
25	In Ground Steel Post Extension (Powder-coated)	1	1	1	1
26	3/8"-16 Hex Nut, SS	3	3	3	3

1) Assemble instrument. Follow instructions on sheet 2 for pre-installation instructions.

2) Attach post extension. With the remaining Loctite, apply a couple drops to the end of the threads on the 3/8"-16 Hex Head Screws. Attach the instrument to the In Ground Post Extension by aligning the holes on each component and fastening them together with the 3/8" Hex Head Screws and the 3/8"-16 Hex Nuts.

3) Excavate hole. After choosing your layout, excavate (1) 10" DIA hole/instrument 34" deep at the pre-determined location.
Note that a deeper excavated hole or shortening the In Ground Post Extension will be required if the desired age groups are between 2 12. Be sure to account for surfacing thickness if it is to be used.

4) Place Instrument. With two people, place the instrument into the hole, verifying the placement and finish height. Adjust the hole depth if necessary to achieve the proper finish height. Check for sufficient clearance around the Instrument, a 36" perimeter around the Instrument is recommended for wheelchair accessibility.

5) Pour concrete. Pour concrete around the In Ground Post Extension within the hole and check that the instrument is level. Leave concrete to set according to the concrete manufacturer's recommendations. If necessary, brace the instrument to hold it level during the curing process. Approximatly (3) 80lb. bags of concrete will be needed for each instrument.

Finished Height Guideline
INDIGO (Ages 2-5, 43.75") (Ages 5-12, 47.75") (Ages 13+, 51.75")
ORANGE (Ages 2-5, 41.5") (Ages 5-12, 45.5") (Ages 13+, 49.5")
TURQUOISE (Ages 2-5, 39.25") (Ages 5-12, 43.25") (Adult, 47.25")
YELLOW (Ages 2-5, 36.75") (Ages 5-12, 40.75") (Ages 13+, 44.75")

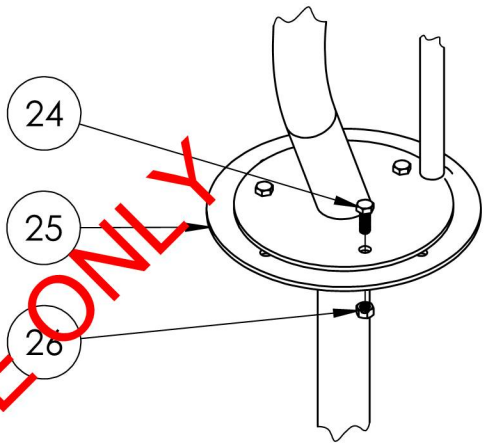

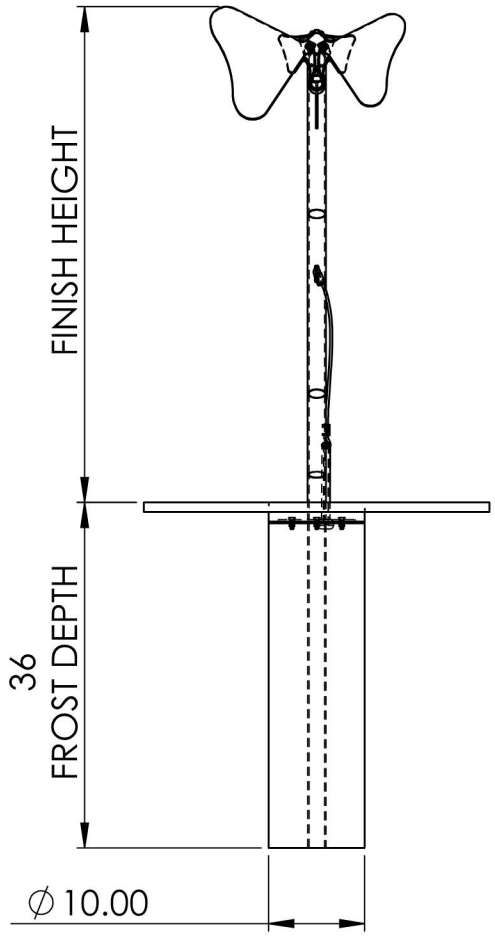

FOR REFERENCE ONLY

SURFACE MOUNT

ITEM NO.	DESCRIPTION	BFLY-I-IG	BFLY-O-IG	BFLY-T-IG	BFLY-Y-IG
20	Pre-Assembly - Indigo Butterfly Instrument	1	-	-	-
21	PRE-ASSEMBLY - ORANGE BUTTERFLY INSTRUMENT	-	1	-	-
22	PRE-ASSEMBLY - TURQUOISE BUTTERFLY INSTRUMENT	-	-	1	-
23	PRE-ASSEMBLY - YELLOW BUTTERFLY INSTRUMENT	-	-	-	1
27	35/64" HEX NUT CAP	3	3	3	3

1) Assemble instrument. Follow instructions on sheet 2 for pre-installation instructions.

2) Determine installation location. Verify/ pour a concrete pad this is a minimum of 24" long x 24" wide x 6" thick. If the concrete pad is at an angle, steel washers are required to act as shims (Shims not provided). If there is not already an existing pad, approximately (4) 80lb. bags will be needed. Allow concrete to cure per concrete manufacturers guidelines.

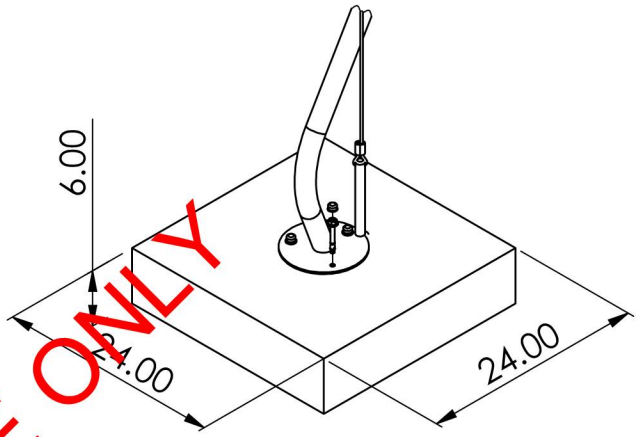

3) Mark hole locations. With two people place the instrument onto the concrete pad and mark the center of the holes on the surface mount base. After you have made your marks, set aside the Instrument in order to drill for anchor holes. With a 3/8" masonry bit and hammer or rotary drill, drill (3X) 3/8" DIA holes atleast 4" deep through concrete at the marked locations.

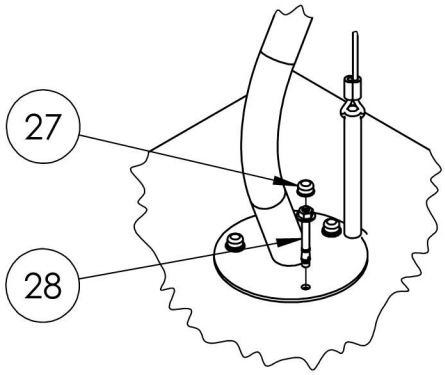

4) Mount instrument. Place the Instrument back over the holes. Insert the anchor bolts into aligned holes. Position anchor nut so that it is flush with the top of the bolt. Pound anchor bolts into the hole until the anchor washer is flush with the surface mount base. Tighten anchor bolts until they are snug. Cover remaining bolt sections with provided nut caps. Note: If installing onto wet concrete, us the wet set anchor manufacturers guidelines for installation procedures.

5) Verify placement. Verify the correct placement, levelness, and finished height of the instrument. Check for sufficient clearance around the Instrument, a 36" perimeter around the Instrument is recommended for wheelchair accessibility.

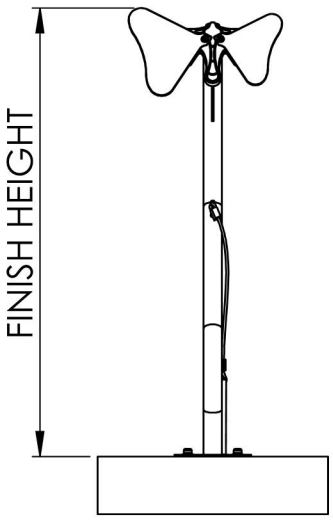

Finish Height Guide

INDIGO (Ages 2-5, 45.75") (Ages 5-12, 49.75") (Ages 13+, 53.75")
ORANGE (Ages 2-5, 43.5") (Ages 5-12, 47.5") (Ages 13+, 51.5")
TURQUOISE (Ages 2-5, 41.25") (Ages 5-12, 45.25") (Ages 13+, 49.25")
YELLOW (Ages 2-5, 38.75") (Ages 5-12, 42.75") (Ages 13+, 46.75")

Note: Recessing the concrete pad below the finished surfacing will be required if desired age groups are between 2-12). Be sure to account for surfacing thickness if it is to be used.

FOR REFERENCE ONLY

PORTABLE MOUNT

ITEM NO.	DESCRIPTION	BFLY-I-PM	BFLY-O-PM	BFLY-T-PM	BFLY-Y-PM
20	Pre-Assembly - Indigo Butterfly Instrument	1	-	-	-
21	PRE-ASSEMBLY - ORANGE BUTTERFLY INSTRUMENT	-	1	-	-
22	PRE-ASSEMBLY - TURQUOISE BUTTERFLY INSTRUMENT	-	-	1	-
23	PRE-ASSEMBLY - YELLOW BUTTERFLY INSTRUMENT	-	-	-	1
29	3/8"-16 THUMB SCREW, 1"LG. SS	3	3	3	3
30	FLOWER AND BUTTERFLY - HDPE PORTABLE STAND (1" BLACK)	1	1	1	1
31	3/8"-16 Hex Nut, SS	3	3	3	3

1) With two people have one situate the Instrument Assembly onto the Portable Stand and align the holes.

2) Have the second person secure the Instrument to the Portable Stand with the provided 3/8"-16 Thumb Screws. Thumb Screws should be tightened snuggly to prevent any raddling during play. The 3/8"-16 Hex Nuts are pre-pressed into the Portable Stand from the Factory.

FOR REFERENCE ONLY

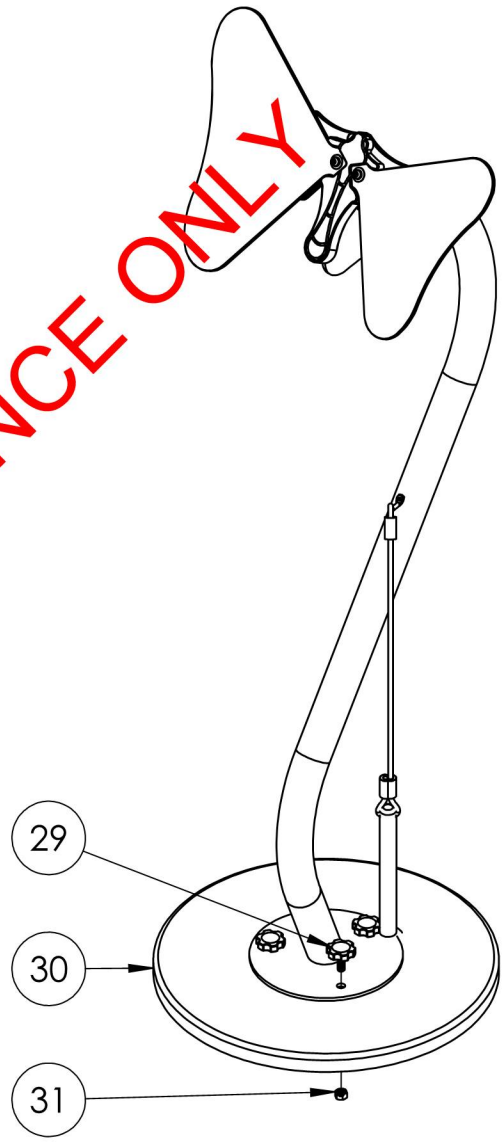

Installation Instructions

Via Ferrata Boulder 1 Combo

Part # VFC001-A

ID SCULPTURE
PLAY. CLIMB. EXPLORE.

591 South Boulevard Street
Gunnison, Colorado 81230
info@idsculpture.com
970-641-1747

Specifications: Via Ferrata Boulder 1 Combo

- Material: GFRC Concrete with Structural Foam, Sculpture Ropes
- Approximate Uninstalled Size: 5'-7" x 4'-3" x 7'-0"
- Approximate Weight: 2,900 Lbs
- Maximum Fall Height: 5'-7" (assumes 12" of protective surfacing)
- Age Group:5-12 Years Old

Important Notes:

- *Warning: Installation over a hard surface such as asphalt or packed earth may result in serious injury or death from falls.*
- *It is the responsibility of the installer to ensure all components are installed in compliance with ASTM F-1487.*
- *All site built footings should be allowed to cure for a minimum of 48 hours prior to installation.*

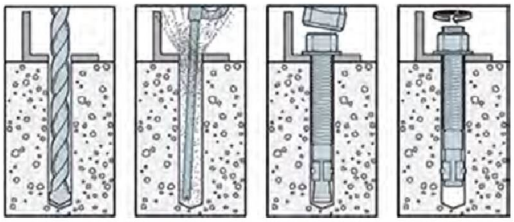

Typical Wedge Anchor Installation

Required Parts (included):

- Via Ferrata Boulder 1
- Via Ferrata Ramp Net
- 4" x 4" x 3/8" Aluminum Angle Mounting Brackets: 4ct
- 3/4" x 8 1/2" SS Wedge Anchor (Sculpture Anchors): 4ct
- 1/2" x 8 1/2" SS Wedge Anchor (Rope Anchors): 3ct
- Bolt Hanger (lifting eye) : 4ct
- Igloo Rope Connector w/Connection Pin: 3ct
- Security Hex Key
- "Via Ferrata Boulder 1 Combo" Drawing Set

FOR REFERENCE ONLY

Recommended Equipment (not included):

- Hammer Drill
- 3/4" x 10" Concrete Drill Bit
- 1/2" x 10" Concrete Drill Bit
- Air Compressor with Blow Tube
- Hole Brush
- 1-1/8" Wrench
- 3/4" Wrench
- 12' Lifting Straps: 4ct
- ½" Quick Links: 4ct
- Large Adjustable Crescent Wrench
- Lift: Reach Type Forklift 8,000lb Capacity, Skid Steer or Crane

Installation Instructions

Via Ferrata Boulder 1 Combo

Part # VFC001-A

ID SCULPTURE
PLAY. CLIMB. EXPLORE.

591 South Boulevard Street
Gunnison, Colorado 81230
info@idsculpture.com
970-641-1747

PRE-INSTALL CHECKLIST

Please review prior to ordering and installing ID Sculpture products.

FOR REFERENCE ONLY

☐ 1. Verify that you have the recommended lifting equipment to unload and install your component, as specified by the installation instructions. Please check the installation instructions for the weight of each component and shipping dimensions.

☐ 2. Develop a proper plan to access the site and control access prior to opening.

☐ 3. Call your local utilities to locate any potential existing below grade equipment?

☐ 4. FOR ALL SCULPTURES: Verify you have accounted for adjustments to the footing depth based on your choice of safety surfacing material. Footing depth must be adjusted to compensate for the depth/thickness requirements of the selected safety surfacing (*see diagrams below*). Layout drawings show the uninstalled dimensions of the component. If you require a modification to a standard component, please notify ID Sculpture when placing your order. *Additional charges may apply.*

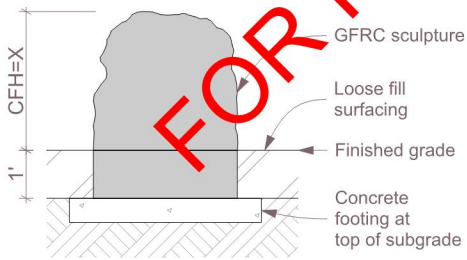

Typical Loose Fill Installation

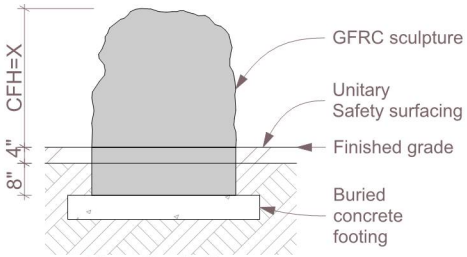

Alternative Unitary Surfacing Installation

*Critical Fall Height (CFH)

☐ 5. Verify that you have installed any required footings prior to the arrival of your sculptures. Please note, footings should be allowed to cure for a minimum of 7 days.

Important Safety Note:
Please install and maintain adequate protective surfacing under and around your equipment. Never let children play on the equipment before protective surfacing is installed. Please consult ASTM F1487 for more information.

Installation Instructions

Via Ferrata Boulder 1 Combo

Part # VFC001-A

ID SCULPTURE
PLAY. CLIMB. EXPLORE.

591 South Boulevard Street
Gunnison, Colorado 81230
info@idsculpture.com
970-641-1747

Installation:

1. Locate and construct the footer and the piers based on the provided layout plan drawing.

2. Make sure that the Bolt Hanger / lifting eyes are securely attached to the bolts protruding from the base of the sculpture. Secure the Lifting Straps to Bolt Hangers using 1/2" Quick Links.

3. Lift the sculpture using an appropriate reach forklift or crane taking care to equalize the load on straps. Refer to pick diagram (page 5).

4. Set the sculpture in place on the footing, verify all use zones as defined by ASTM 1487 before drilling anchor holes.

5. Remove the bolt hangers and replace the nut over mounting brackets.

6. Drill through the holes in the mounting brackets and into the concrete slab with a 3/4" x 10" hammer drill bit to a minimum depth of 7 1/2", clean holes with compressed air and brush.

7. Install the stainless steel 3/4" x 8 1/2" wedge anchors and tighten.

8. Connect Ramp Net to GFRC sculpture with provided igroo rope connectors & connection pins.

9. Locate the chain connection points by pulling chain in line with the net and mark holes in the concrete piers. Remove excess chain links as necessary.

10. Drill and clean holes (3) with a 1/2" hammer drill bit in the marked locations on the footer to a minimum depth of 7".

11. Secure the supplied 1/2"x8-1/2" SS wedge anchors (3) leaving 1-1/2" of thread exposed above pier.

12. Connect chain to the wedge anchor following the detail below. Trim anchor stud flush with top of nut.

13. Install resilient surfacing material in accordance with layout guidelines, and ASTM standards.

Never intall any rope component taut. Some slack should be present.

FOR REFERENCE ONLY

Installation Instructions

Via Ferrata Boulder 1 Combo

Part # VFC001-A

ID SCULPTURE
PLAY. CLIMB. EXPLORE.

591 South Boulevard Street
Gunnison, Colorado 81230
info@idsculpture.com
970-641-1747

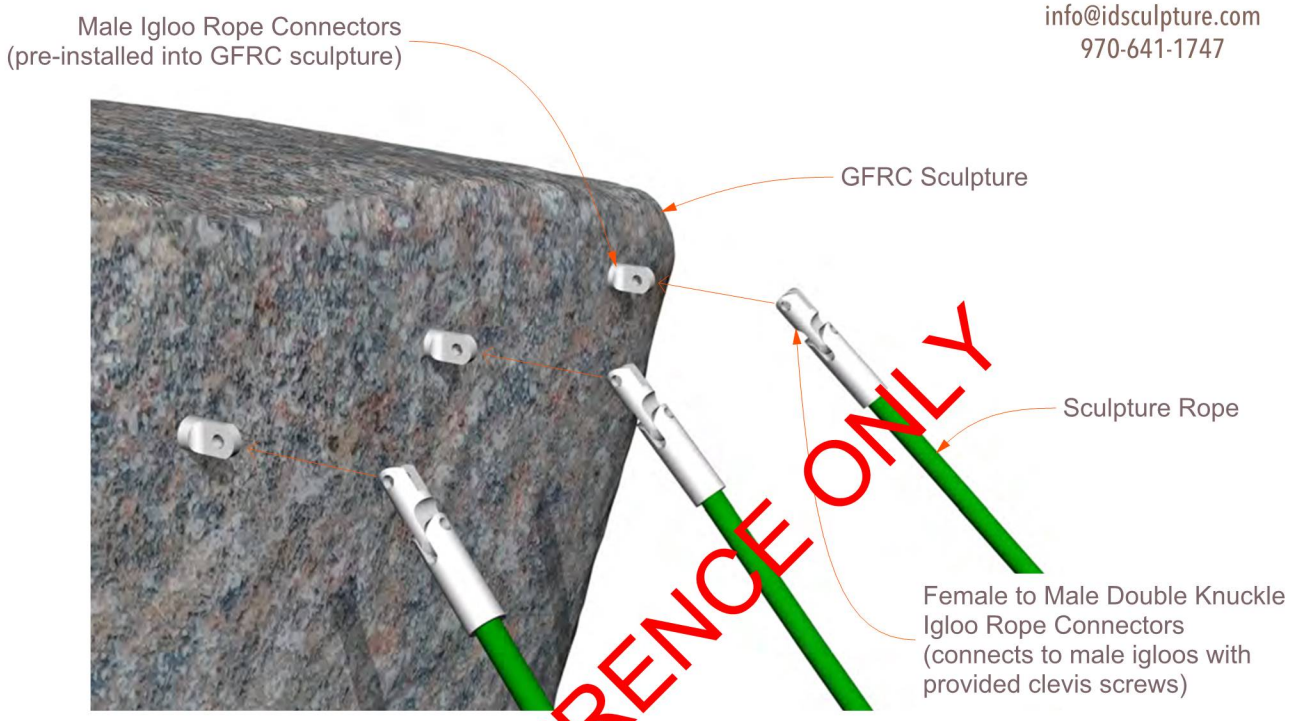

Rope to Sculpture Connection Detail

FOR REFERENCE ONLY

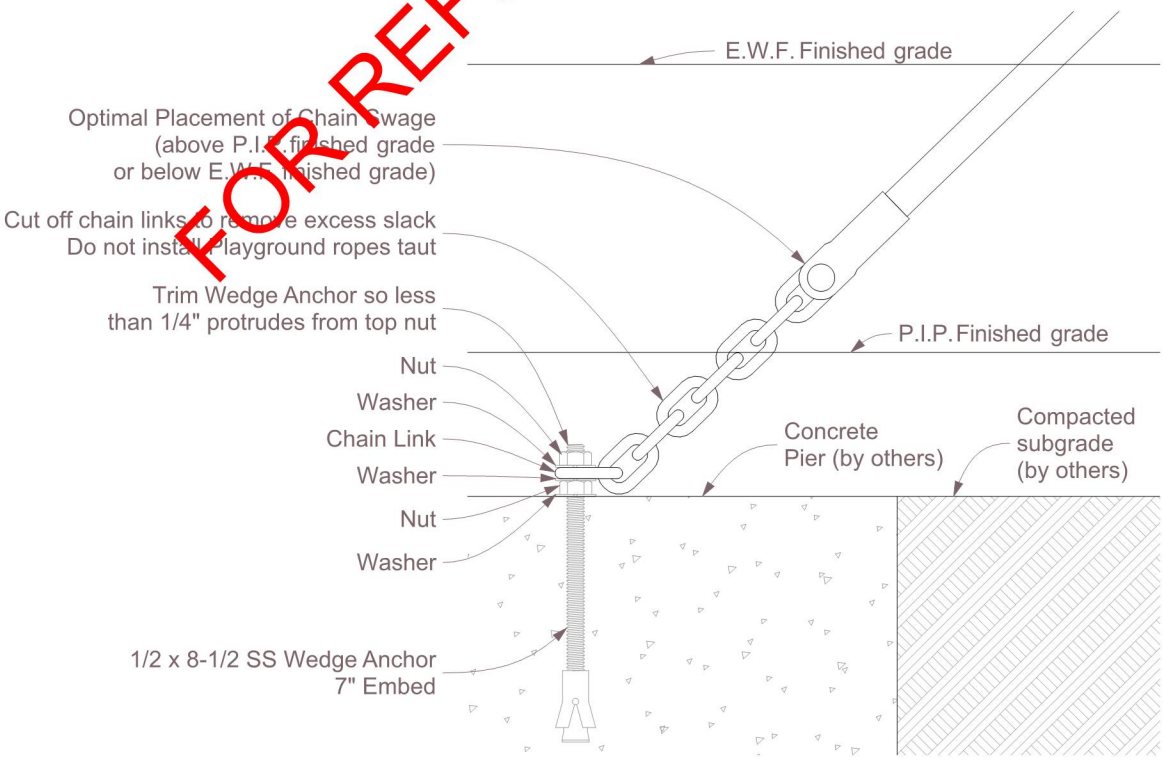

Rope and Chain to Concrete Pier Connection - Typical Detail

Installation Instructions

Via Ferrata Boulder 1 Combo

Part # VFC001-A

ID SCULPTURE
PLAY. CLIMB. EXPLORE.

591 South Boulevard Street
Gunnison, Colorado 81230
info@idsculpture.com
970-641-1747



Example of ratchet strap choke on typical boulder. Strap is used to equalize load when lifting. (Note: this is not a Via Ferrata Boulder)

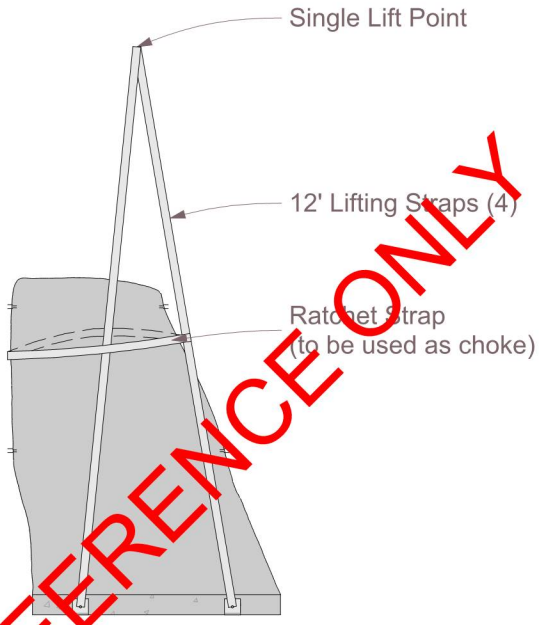

VF Boulder 1 Pick Diagram - Elevation

FOR REFERENCE ONLY

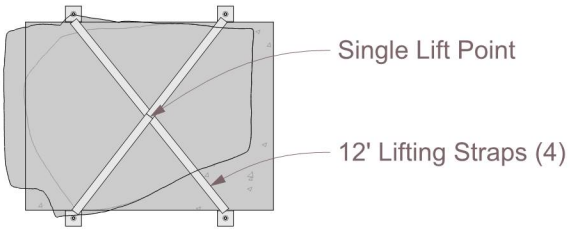

VF Boulder 1 Pick Diagram - Plan

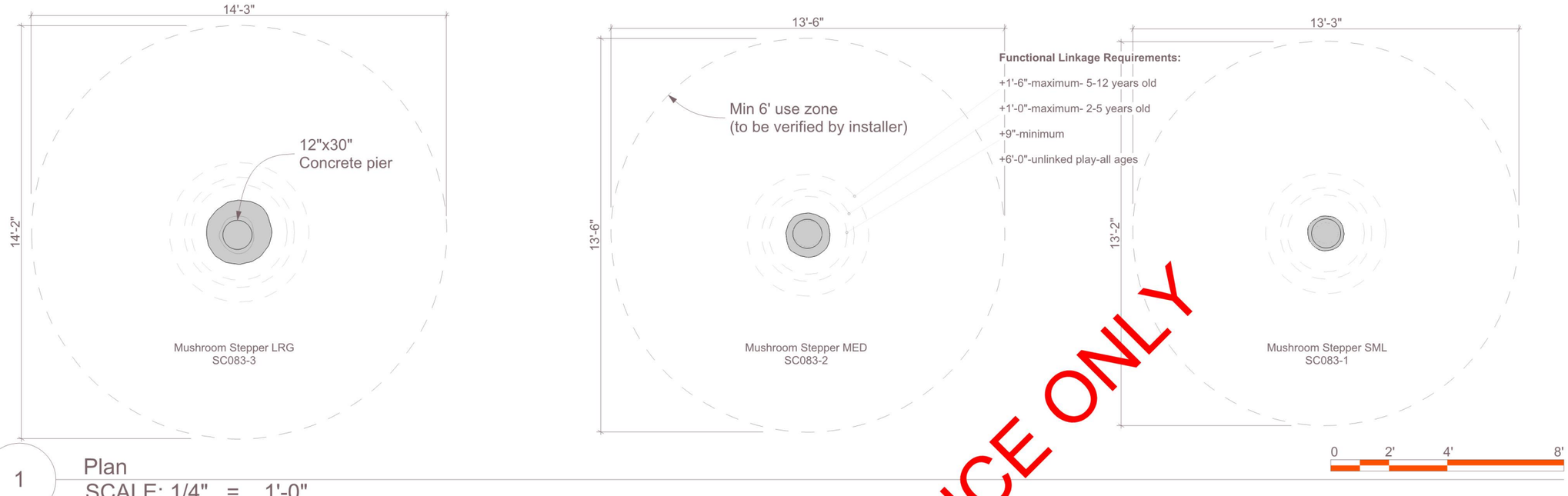

1 Plan
SCALE: 1/4" = 1'-0"

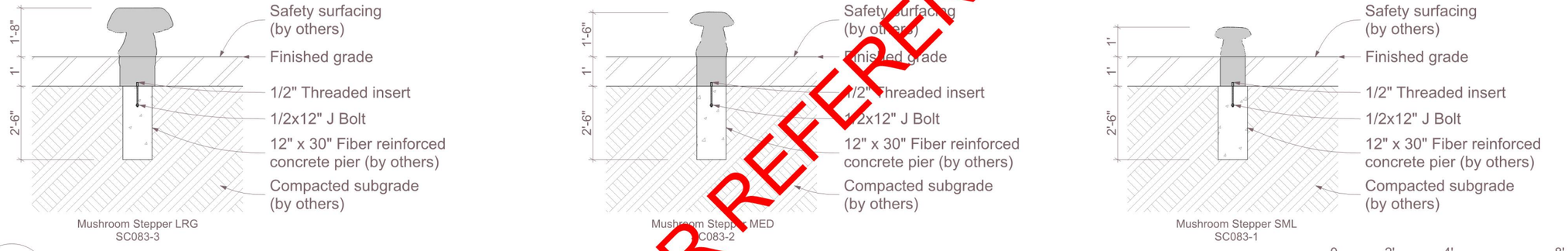

2 Section
SCALE: 1/4" = 1'-0"



3 Mushroom Stepper SML SC083-1



4 Mushroom Stepper MED SC083-2



5 Mushroom Stepper LRG SC083-3



6 Mushroom Steppers

FOR REFERENCE ONLY

ID SCULPTURE
PLAY. CLIMB. EXPLORE.

Mushroom Steppers

SC083
Age Group: 2-5

SCHEMATIC DESIGN
NOT FOR CONSTRUCTION

All IDS projects are designed to meet or exceed ASTM 1487.
Not all equipment may be appropriate for all children.
Supervision is required.
ASTM compliant safety surfacing is required under and around all play equipment.
The Americans with Disabilities Act (ADA) may require your play area to be accesible, please consult with an ADA professional to ensure compliance.

Date
12/6/2023

Drawing Title
Layout

Sheet #
A.01.1

591 South Boulevard Street
Gunnison, Colorado 81230
info@idsculpture.com

Installation Instructions
Mushroom Steppers
Part # SC083

ID SCULPTURE
PLAY. CLIMB. EXPLORE.

591 South Boulevard Street
Gunnison, Colorado 81230
info@idsculpture.com
970-641-1747

Specifcations: Mushroom Steppers

- Material: GFRC Concrete with Structural Foam
- Approximate Uninstalled Size:
  -Mushroom Stepper SML: 1'-3" x 1'-3" x 2'-0" Tall
  -Mushroom Stepper MED: 1'-6" x 1'-6" x 2'-6" Tall
  -Mushroom Stepper LRG: 2'-3" x 2'-3" x 2'-8" Tall
- Approximate Weight: 200-600 lbs
- Maximum Fall Height: 20"
- Age Group: 2-5 Years Old

Required Parts (included):

- Mushroom Steppper GFRC Sculpture(s)
- 1/2" X 12" J bolt / Lock Nut and Washer: 1 ct
- "Mushroom Steppers" Drawing Set

Recommended Equipment (not included):

- Bobcat W 12" Auger and Forks
- .073 YDS of Concrete (3.26 - 80lb bags) Per Unit
- Concrete Mixer
- 10' Lifting Straps: 2ct
- Adjustable Crescent Wrench

Important Notes:

- *Warning: Installation over a hard surface such as asphalt or packed earth may result in serious injury or death from falls.*
- *It is the responsibility of the installer to ensure all components are installed in compliance with ASTM F-1487.*
- *All site built footings should be allowed to cure for a minimum of 48 hours prior to installation.*

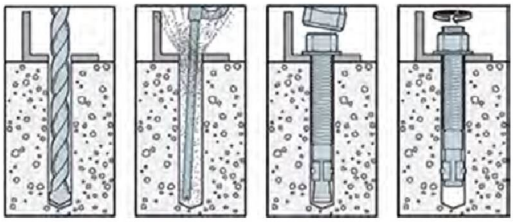

Typical Wedge Anchor Installation

FOR REFERENCE ONLY

Installation Note: Max Fall Height above TPS:
2-5: 20"
5-12: 30"

Installation Note: Finished height of stepping forms may be varied by lowering concrete footing.
Installation is wet set.

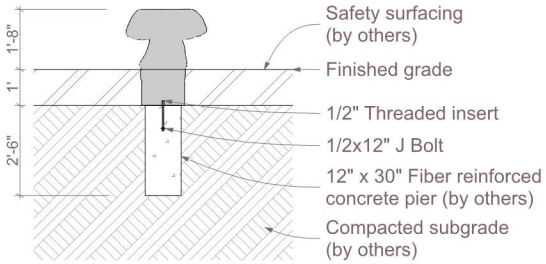

Mushroom Stepper LRG
SC083-3

Typical Section

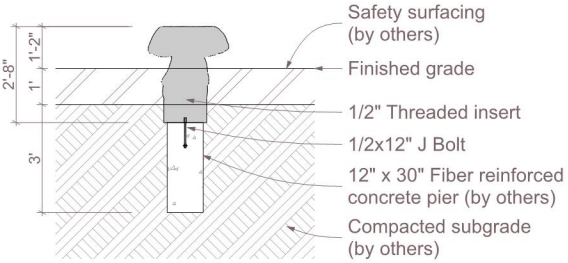

Section - Varyied Height

Installation Instructions

Mushroom Steppers

Part # SC083

ID SCULPTURE
PLAY. CLIMB. EXPLORE.

591 South Boulevard Street
Gunnison, Colorado 81230
info@idsculpture.com
970-641-1747

PRE-INSTALL CHECKLIST

Please review prior to ordering and installing ID Sculpture products.

FOR REFERENCE ONLY

☐ 1. Verify that you have the recommended lifting equipment to unload and install your component, as specified by the installation instructions. Please check the installation instructions for the weight of each component and shipping dimensions.

☐ 2. Develop a proper plan to access the site and control access prior to opening.

☐ 3. Call your local utilities to locate any potential existing below grade equipment?

☐ 4. FOR ALL SCULPTURES: Verify you have accounted for adjustments to the footing depth based on your choice of safety surfacing material. Footing depth must be adjusted to compensate for the depth/thickness requirements of the selected safety surfacing (*see diagrams below*). Layout drawings show the uninstalled dimensions of the component. If you require a modification to a standard component, please notify ID Sculpture when placing your order. *Additional charges may apply.*

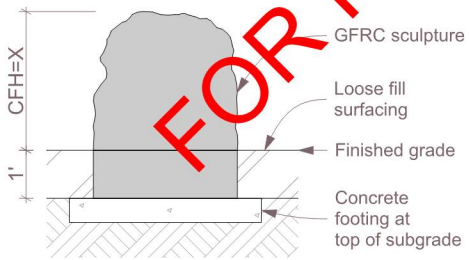

Typical Loose Fill Installation

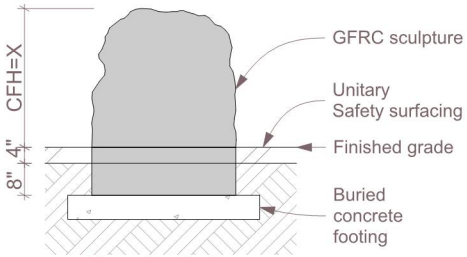

Alternative Unitary Surfacing Installation

*Critical Fall Height (CFH)

☐ 5. Verify that you have installed any required footings prior to the arrival of your sculptures. Please note, footings should be allowed to cure for a minimum of 7 days.

Important Safety Note:
Please install and maintain adequate protective surfacing under and around your equipment. Never let children play on the equipment before protective surfacing is installed. Please consult ASTM F1487 for more information.

Installation Instructions
Mushroom Steppers
Part # SC083

ID SCULPTURE
PLAY. CLIMB. EXPLORE.
591 South Boulevard Street
Gunnison, Colorado 81230
info@idsculpture.com
970-641-1747

Sculpture Installation:

1. Locate the center points of concrete piers (by others) based on layout plan drawing. Please refer to ASTM 1487 for layout guidlines.

2. Dig holes with 12" auger (or posthole digger) to a 30" depth.

3. Fill holes with concrete.

4. With the stepping forms on their side or hanging from straps, insert the 1/2" x 12" J bolt into the threaded insert centered in the base of the stepping form, tighten the lock nut.

5. Attach 2 lifting straps securely wrapped as a "choke" around the middle of the stepping form at each side, lift, carry and place stepping form with J bolt attached, into wet concrete pier. Note: for small and medium stepping forms the use of a hand truck or dolly with 2 workers can be sufficient.

6. Note: it is the responsibility of the installer to verify compliance of use zones as required by ASTM 1487.

7. Install resilient surfacing material in accordance with layout guidelines, and ASTM standards.

FOR REFERENCE ONLY

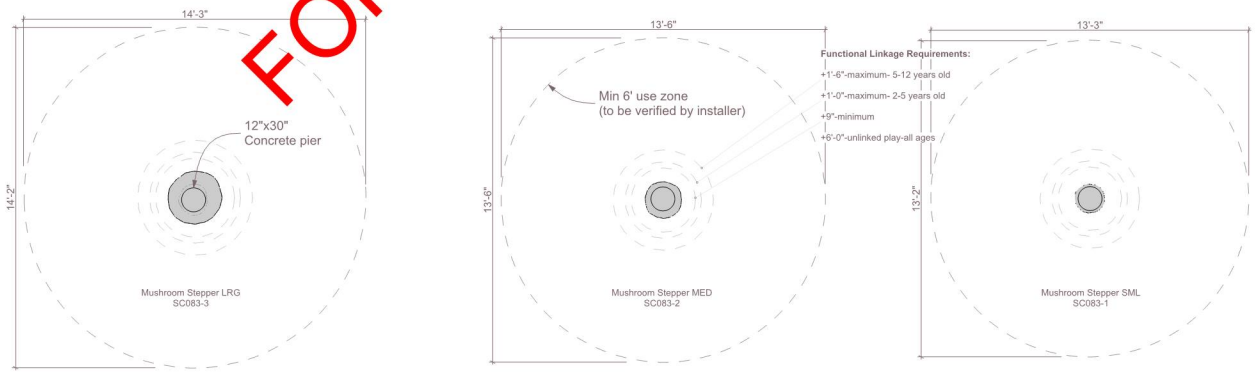

Plan

TRAVERS PARK PLAYGROUND AND SPLASH PAD- SANDPOINT, ID

SHEET INDEX

1	COVER	SHEET 1 OF 20
L-1	PLAYGROUND BASE BID	SHEET 2 OF 20
L-2	SAFETY SURFACING LAYOUT PLAN	SHEET 3 OF 20
L-3	NORTH HILL ALTERNATES	SHEET 4 OF 20
L-4	SPLASH PAD - BASE BID	SHEET 5 OF 20
L-5	SPLASH PAD - ALTERNATES	SHEET 6 OF 20
L-6	LANDSCAPE PLAN	SHEET 7 OF 20
L-7	IRRIGATION PLAN	SHEET 8 OF 20
LD-1	DETAILS	SHEET 9 OF 20
LD-2	DETAILS	SHEET 10 OF 20
LD-3	SPLASH PAD DETAILS	SHEET 11 OF 20
LD-4	ALTERNATE DETAILS	SHEET 12 OF 20
C0.1	GENERAL NOTES AND DETAILS	SHEET 13 OF 20
C1.0	PLAYGROUND UTILITY PLAN	SHEET 14 OF 20
C2.0	PLAYGROUND GRADING PLAN	SHEET 15 OF 20
E01	LEGENDS & ABBREVIATIONS - ELECTRICAL	SHEET 16 OF 20
E02	SPECIFICATIONS - ELECTRICAL	SHEET 17 OF 20
E10	SITE PLAN - ELECTRICAL	SHEET 18 OF 20
E50	ONELINE DIAGRAMS - ELECTRICAL	SHEET 19 OF 20
E60	SCHEDULES & DETAILS - ELECTRICAL	SHEET 20 OF 20

CONSULTANT TEAM

LANDSCAPE ARCHITECT: MICHAEL TERRELL - LANDSCAPE ARCHITECTURE, PLLC
1421 N. Meadowwood Lane, Suite 150
Liberty Lake, Washington 99019
(509) 922-7449
Contact: Michael Terrell, ASLA

CIVIL ENGINEER: VAN HOUTEN CONSULTING AND DESIGN
401 ½ E. Sherman Ave., Ste. #211
Coeur d'Alene, ID
(208) 755-8512
Contact: Merle Van Houton, PE, LEED AP

ELECTRICAL ENGINEER: MW ENGINEERS
601 W 1ST AVE SUITE 1300
SPOKANE, WA 99201
(509) 836-9020
Contact: Kameron Pettet

OWNER: CITY OF SANDPOINT, ID
Contact: Maeve Nevins-Lavtar,
Parks Planning and Development Manager
1123 Lake Street
Sandpoint, ID
(208) 946-2711

BASE BID AND ALTERNATE DESCRIPTIONS

- BASE BID - SPLASH PAD AND ELEMENTS, TOT PLAY EQUIPMENT, 5-12 PLAY EQUIPMENT, ARTIFICIAL TURF SAFETY SURFACING, TURF, IRRIGATION, PLANTS, SLEDDING HILL AND MOWCURBS.
- ALTERNATE #1 - ADDITIONAL SPLASH PAD ELEMENTS
- ALTERNATE #2 - SPLASH PAD IRRIGATION BOOSTER PUMP
- ALTERNATE #3 - NORTH HILL - ASPHALT PATH, PLAZA, FREENOTES HARMONY PARK BUTTERFLY ELEMENTS
- ALTERNATE #4 - NORTH HILL EMBANKMENT BOULDER CONSTRUCTION, SLIDE (OWNER FURNISHED/CONTRACTOR INSTALLED), INSTALLATION, CURB, AND PLAYGROUND PROTECTIVE SURFACING.
- ALTERNATE #5 - ID SCULPTURE PLAY EQUIPMENT
- ALTERNATE #6 - POURED IN PLACE PAYGROUND SAFETY SURFACING
- ALTERNATE #7 - SODDED TURF GRASS
- ALTERNATE #8 - CONCRETE PAVING
- ALTERNATE #9 - LIGHTS AND BASES

SEE SPECIFICATIONS FOR ADDITIONAL DESCRIPTIONS.

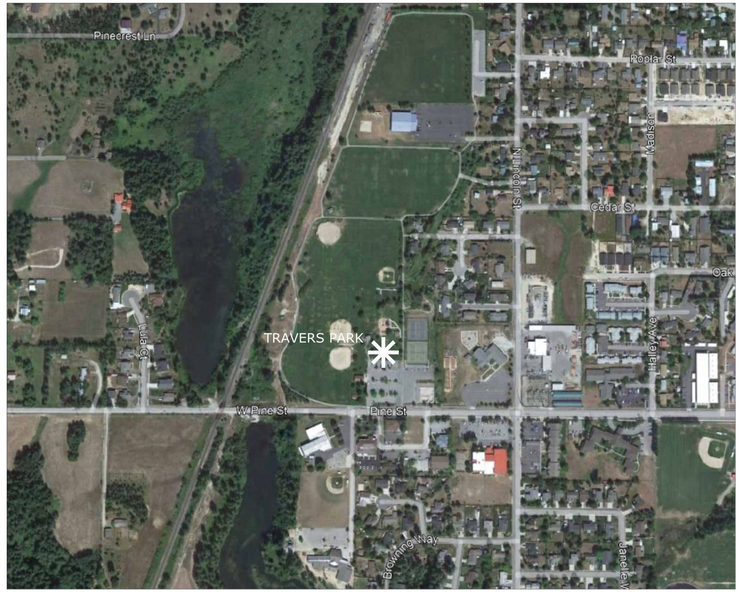

VICINITY MAP

NTS

UNDERGROUND SERVICE ALERT
ONE-CALL NUMBER
811
CALL TWO BUSINESS DAYS BEFORE YOU DIG

PLAYGROUND CALLOUTS

- (A) 5-12 PLAYGROUND EQUIPMENT TYPE A OR APPROVED EQUAL. SEE SPECIFICATIONS.
- (B) TYPE B 2 BAY SWING, OR APPROVED EQUAL. SEE SPECIFICATIONS.
- (C) TYPE C 2 BAY ZIP LINE OR APPROVED EQUAL. SEE SPECIFICATIONS.
- (D) TYPE D TOT SWING. SEE SPECIFICATIONS.
- (E) TYPE E MERRY-GO-ROUND. SEE SPECIFICATIONS.
- (F) TYPE F. TOT STRUCTURE. SEE SPECIFICATIONS.
- (G) BEAR STATUE. SEE SHEET LD-1, DETAIL H.
- (H) COUGAR STATUE. SEE SHEET LD-1, DETAIL H.

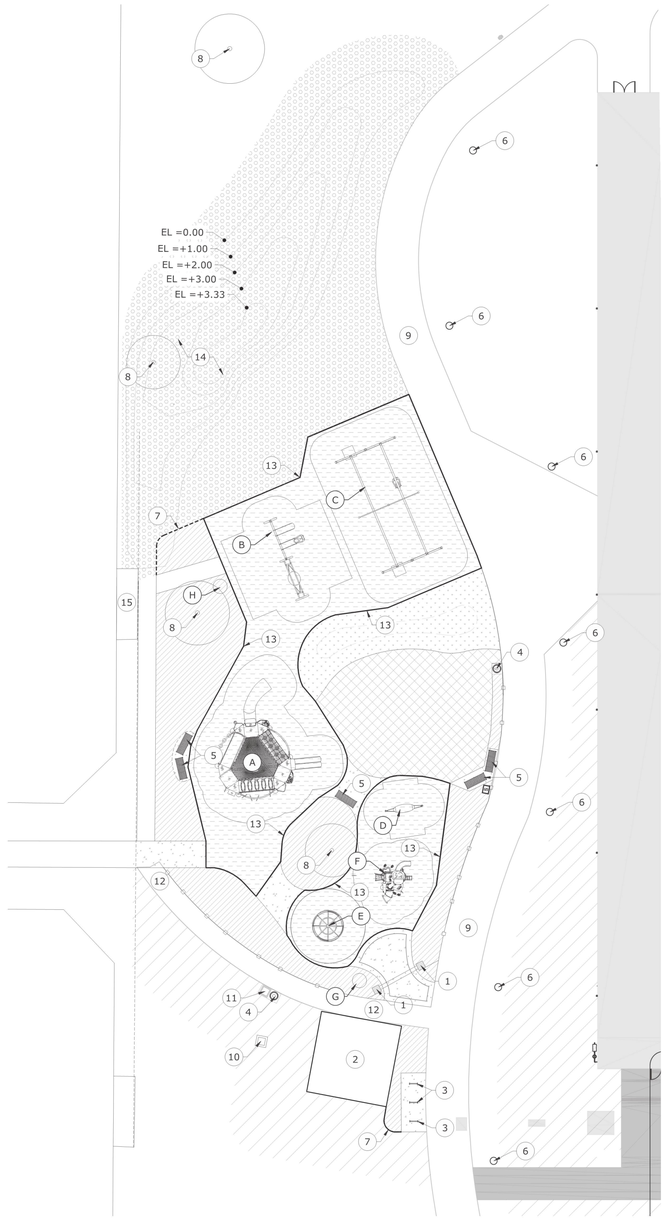

A PLAYGROUND CONSTRUCTION PLAN BASE BID

GRAPHIC SCALE
20 0 10 20 40
(IN FEET)
1 inch = 20 ft.



B PLAYGROUND LAYOUT PLAN BASE BID

GRAPHIC SCALE
20 0 10 20 40
(IN FEET)
1 inch = 20 ft.

CALLOUTS

1. GATEWAY ELEMENT. OWNER PROVIDED, OWNER INSTALLED.
2. SHELTER AND CONCRETE PAD TO BE RELOCATED AS PART OF BUILDING CONSTRUCTION. BY OTHERS.
3. BIKE RACKS ON CONCRETE PAD. BIKE RACK: SPORTWORKS TOFINO NO SCRATCH BIKE RACK, SEE SPECIFICATIONS. OWNER PROVIDED, OWNER INSTALLED.
4. TRASH RECEPTACLE ON CONCRETE PAD. DUMOR #107, 22 GALLON STEEL RECEPTACLE. OWNER PROVIDED, OWNER INSTALLED.
5. 6' BENCH ON CONCRETE PAD. DUMOR BENCH #165, DOUGLAS FIR OR THERMALLY MODIFIED RED OAK SEAT. CENTER AND END ARMREST OR APPROVED EQUAL. OWNER PROVIDED, OWNER INSTALLED.
6. EXISTING LIGHT AS PART OF BUILDING CONSTRUCTION TO REMAIN. PRESERVE AND PROTECT.
7. 6" CONCRETE MOWCURB. SEE SHEET LD-2, DETAIL F.
8. EXISTING TREE TO REMAIN, PRESERVE AND PROTECT. LOCATION APPROXIMATE, VERIFY IN FIELD. SEE SHEET LD-2 DETAIL I.
9. FIRE LANE AS PART OF SPORT BUILDING CONSTRUCTION. BY OTHERS.
10. 320 SQ IN STEEL PARK GRILL ON SINGLE POST WITH EMBEDDED MOUNTING. OWNER PROVIDED, OWNER INSTALLED.
11. CONCRETE HOT COAL DISPOSAL BIN. OWNER PROVIDED, OWNER INSTALLED.
12. SIDEWALK AS PART OF SPORT BUILDING CONSTRUCTION. BY OTHERS.
13. PLAY AREA CURB, TYP. SEE SHEET LD-1, DETAIL A.
14. SLEDDING HILL. SEE SHEET L-3 FOR ALTERNATES.
15. DUGOUT. PRESERVE AND PROTECT.

LEGEND

- ARTIFICIAL TURF SAFETY SURFACING, **BASE BID**. SEE SHEET LD-1, DETAIL C.
- SODDED TURF WITH AUTOMATIC OVERHEAD IRRIGATION, **BASE BID**.
- REPAIR AREA. SEEDED TURF WITH AUTOMATIC OVERHEAD IRRIGATION, **BASE BID**. ALTERNATE #7: INSTALL SODDED TURF GRASS. SEE SPECIFICATIONS.
- PLANTER AREA WITH MINERAL MULCH TYPE 'A' OVER WEED BARRIER FABRIC. SEE PLANTING NOTES FOR TYPE.
- SPLASH PAD. SEE SHEET L-4.
- 4" BROOM FINISH CONCRETE WALK.
- ASPHALT PATH, **BASE BID**. ALTERNATE #8: 4" CONCRETE WITH MEDIUM BROOM FINISH. SEE SPECIFICATIONS.
- LANDSCAPE AND IRRIGATION REPAIR BY OTHERS AS PART OF BUILDING CONTRACT.
- 4' TALL CHAINLINK FENCE, BLACK. SEE SPECIFICATIONS.

CONSTRUCTION NOTES

1. CONTRACTOR SHALL CALL 811 TO LOCATE ALL EXISTING ABOVE OR BELOW GRADE ON-SITE UTILITIES PRIOR TO COMMENCEMENT OF WORK, INCLUDING PLANTING. THE LOCATIONS OF UTILITIES, STRUCTURES AND SERVICES SHOWN IN THE CONTRACT DOCUMENTS SHALL BE DEEMED TO BE APPROXIMATIONS ONLY. ALL DISCREPANCIES BETWEEN WHAT IS SHOWN AND THE ACTUAL FIELD CONDITIONS SHALL BE REPORTED TO THE OWNER'S REPRESENTATIVE. PRESERVE AND PROTECT EXISTING UTILITIES TO REMAIN FROM DAMAGE OR DISRUPTION, TYPICAL. MAINTAIN LOCATES DURING CONSTRUCTION FOR REFERENCE. CONTRACTOR SHALL RECORD ALL UTILITY MARKINGS ON A SEPARATE SET OF DRAWINGS. THIS SET SHALL BE KEPT ON-SITE FOR REFERENCE FOR DURATION OF CONTRACT.
2. CONTRACTOR TO COORDINATE WITH OWNER'S MAINTENANCE PERSONNEL TO IDENTIFY AND PROTECT ANY EXISTING OWNER MAINTAINED UTILITIES, WATER LINES, IRRIGATION LINES, IRRIGATION CONTROL WIRES OR OTHER IMPROVEMENTS PRIOR TO CONSTRUCTION.
3. CONTRACTOR TO COORDINATE UTILITY WORK, SLEEVE AND IRRIGATION INSTALLATION TO AVOID CONFLICTS BETWEEN UTILITIES, IRRIGATION EQUIPMENT AND THE PLACEMENT OF TREES, SHRUBS AND LANDSCAPE EDGING/MOWCURBS.
4. THE INFORMATION ON THIS SHEET IS INCOMPLETE UNLESS ACCOMPANIED BY THE CORRESPONDING SPECIFICATION SECTIONS AND DETAILS DEVELOPED FOR THIS PROJECT. REFER TO THOSE SPECIFICATIONS AND DETAILS FOR ADDITIONAL INFORMATION.
5. CONTRACTOR IS RESPONSIBLE FOR VERIFYING CONDITIONS IN THE FIELD PRIOR TO CONSTRUCTION AND NOTIFYING THE OWNER AND OWNER'S REPRESENTATIVES OF ANY DISCREPANCIES.
6. CONTRACTOR TO COORDINATE THESE PLANS WITH CIVIL, ELECTRICAL AND ARCHITECTURAL PLANS. IMMEDIATELY NOTIFY OWNER'S REPRESENTATIVE IF CONFLICTS BETWEEN PLANS ARE IDENTIFIED OR IF ADDITIONAL INFORMATION OR CLARIFICATION IS REQUIRED FOR COORDINATION.
7. PRESERVE AND PROTECT EXISTING IMPROVEMENTS TO REMAIN. REPAIR OR REPLACE ALL CURBS AND WALKS DAMAGED DURING CONSTRUCTION.
8. LAYOUT AND EXTENT OF EXCAVATION TO BE STAKED AND REVIEWED IN THE FIELD BY LANDSCAPE ARCHITECT AND/OR OWNER.
9. LIABLE FOR ENCROACHMENT: THE CONTRACTOR SHALL BE RESPONSIBLE FOR IDENTIFYING AND UNDERSTANDING THE LIMITS OR WORK. CONTRACTOR IS RESPONSIBLE FOR ANY COORDINATION OF ENCROACHMENT ONTO ADJACENT PROPERTY, RIGHTS-OF-WAY, EASEMENTS, SET-BACKS, OR ANY OTHER LEGAL PROPERTY RESTRICTIONS EITHER MARKED OR UNMARKED.

LAYOUT NOTES

1. THE CONTRACTOR SHALL COORDINATE ALL CONSTRUCTION ELEMENTS INCLUDING UTILITY LOCATIONS AND REQUIRED SLEEVING PRIOR TO INSTALLATION. VERIFY CRITICAL DIMENSIONS, REFERENCE POINT LOCATIONS AND CONSTRUCTION CONDITIONS PRIOR TO INITIATING CONSTRUCTION. TEMPORARY BENCHMARKS OR REFERENCE POINTS SHALL BE SET BY THE CONTRACTOR AS NECESSARY. NOTIFY THE OWNER'S REPRESENTATIVE IMMEDIATELY SHOULD A DISCREPANCY ARISE AND REDIRECT WORK TO AVOID DELAYS.
2. ALL DIMENSIONS SHALL BE VERIFIED IN FIELD AND CHALKED, STRING LINED OR FLAGGED BY THE CONTRACTOR PRIOR TO CONSTRUCTION. ANY MINOR ADJUSTMENTS MADE TO ACHIEVE OVERALL DESIGN LAYOUT SHALL BE ACCEPTED BY THE OWNER PRIOR TO CONSTRUCTION.
3. LAYOUT IS BASED ON THE POINT(S) OF BEGINNING (P.O.B.) AND BASELINE(S) OR GRID SYSTEM AS SHOWN, SEE ARCHITECTURAL AND CIVIL DRAWINGS FOR ADDITIONAL INFORMATION.
4. ALL LAYOUT AND GRADES SHALL BE COMPLETED BY A LICENSED SURVEYOR.
5. LAYOUT AND FINAL GRADES TO BE APPROVED BY OWNER'S REPRESENTATIVE. SEE SPECIFICATIONS FOR FINISH GRADE REQUIREMENTS FOR FIELDS.

MATERIAL NOTES

1. ALL REINFORCING AND FORMS SHALL BE SECURED IN PLACE AND ACCEPTED BY OWNER'S REPRESENTATIVE PRIOR TO PLACING ANY CONCRETE.
2. CONCRETE FINISHES SHALL BE AS NOTED. CONTRACTOR SHALL PROVIDE 4'X4' SAMPLES OF ALL SPECIFIED FINISHES OF CONCRETE USING THE SAME MATERIALS THAT WILL BE USED IN THE ACTUAL CONSTRUCTION FOR EACH TYPE SPECIFIED. SAMPLES SHALL BE PREPARED WELL ENOUGH IN ADVANCE OF SCHEDULED CONCRETE POUR TO ALLOW FOR REVIEW AND POSSIBLE RE-POURING OF UNACCEPTABLE SAMPLES. UNACCEPTABLE SAMPLES SHALL BE RE-PREPARED UNTIL ACCEPTED BY THE OWNER'S REPRESENTATIVE. ACCEPTED SAMPLES SHALL BE PROTECTED AND REMAIN ON SITE FOR REFERENCE UNTIL FINAL ACCEPTANCE.
3. ALL FENCES AND GATES SHOWN ON PLAN ARE GRAPHIC REPRESENTATIONS; REFER TO DETAILS AND SPECIFICATIONS FOR PRECISE LOCATION AND GATE OPERATION.
4. ASPHALT SHALL NOT BE INSTALLED UNTIL ALL EDGES AND SITE FURNISHING PADS ARE INSTALLED.
5. DO NOT PLACE ANY ATHLETIC FIELD MATERIAL UNTIL SUBMITTALS ARE FULLY APPROVED. MATERIAL SUBMITTALS WILL BE COMPARED TO DELIVERED MATERIAL.

UNDERGROUND SERVICE ALERT
ONE-CALL NUMBER
811
CALL TWO BUSINESS DAYS BEFORE YOU DIG



Michael Terrell
Landscape Architecture, PLLC
1421 N. Meadowwood Lane
Suite 150
Liberty Lake, WA
(509) 922-7449

C 2024
Michael Terrell - Landscape Architecture, PLLC
This drawing may not be reproduced in any form without written permission. All rights and title to these drawings, including but not limited to the design are retained.

LANDSCAPE ARCHITECT'S SEAL

REGISTERED LANDSCAPE ARCHITECT NO. 234
MICHAEL D. TERRELL
STATE OF IDAHO

TRAVERS PARK PLAYGROUND & SPLASH PAD CONSTRUCTION
2016 PINE ST | SANDPOINT, ID
CITY OF SANDPOINT

PLAYGROUND - BASE BID

REVISION	DATE
1	
2	
3	
4	

JOB NUMBER 22-100A
DATE 5/1/24
DRAWN BY SLH
CHECKED BY MDT

DRAWING 2 OF 12

L-1



B SAFETY SURFACING & MATERIALS LAYOUT PLAN

GRAPHIC SCALE
10 0 5 10 20
(IN FEET)
1 inch = 10 ft.

CALLOUTS

1. GATEWAY ELEMENT. OWNER PROVIDED, OWNER INSTALLED.
2. SHELTER AND CONCRETE PAD TO BE RELOCATED AS PART OF SPORT BUILDING CONSTRUCTION. BY OTHERS.
3. BIKE RACKS ON CONCRETE PAD. BIKE RACK: SPORTWORKS TOFINO NO SCRATCH BIKE RACK, SEE SPECIFICATIONS. OWNER PROVIDED, OWNER INSTALLED.
4. TRASH RECEPTACLE ON CONCRETE PAD. DUMOR #107, 22 GALLON STEEL RECEPTACLE. OWNER PROVIDED, OWNER INSTALLED.
5. 6' BENCH ON CONCRETE PAD. DUMOR BENCH #165, DOUGLAS FIR OR THERMALLY MODIFIED RED OAK SEAT. CENTER AND END ARMREST OR APPROVED EQUAL. OWNER PROVIDED, OWNER INSTALLED.
6. EXISTING LIGHT AS PART OF BUILDING CONSTRUCTION TO REMAIN. PRESERVE AND PROTECT.
7. 6" CONCRETE MOWCURB. SEE SHEET LD-2, DETAIL F.
8. EXISTING TREE TO REMAIN, PRESERVE AND PROTECT. SEE SHEET LD-2 DETAIL I.
9. FIRE LANE AS PART OF SPORT BUILDING CONSTRUCTION. BY OTHERS.
10. 320 SQ IN STEEL PARK GRILL ON SINGLE POST WITH EMBEDDED MOUNTING. OWNER PROVIDED, OWNER INSTALLED.
11. CONCRETE HOT COAL DISPOSAL BIN. OWNER PROVIDED, OWNER INSTALLED.
12. SIDEWALK AS PART OF SPORT BUILDING CONSTRUCTION. BY OTHERS.
13. PLAY AREA CURB, TYP. SEE SHEET LD-1, DETAIL A.
14. SPLASH PAD. SEE SHEET L-4.
15. 18" BAND AROUND CONCRETE FOR CHILDREN'S HANDPRINTS. CONTRACTOR PROVIDE SEPARATE POUR AND COORDINATE WITH CITY STAFF.

LEGEND

- SPLASH PAD. SEE SHEET L-4.
- 4" BROOM FINISH CONCRETE WALK.
- LANDSCAPE AND IRRIGATION REPAIR BY OTHERS AS PART OF BUILDING CONTRACT.
- 4' TALL CHAINLINK FENCE, BLACK. SEE SPECIFICATIONS.

BASE BID: PLAY TURF

- FOREVER LAWN PLAYGROUND GRASS, COLOR: BLUE OR APPROVED EQUAL. SEE SPECIFICATIONS.
- FOREVER LAWN PLAYGROUND GRASS, COLOR: GREEN OR APPROVED EQUAL. SEE SPECIFICATIONS.
- FOREVER LAWN PLAYGROUND GRASS, COLOR: GOLD OR APPROVED EQUAL. SEE SPECIFICATIONS.

ALTERNATE 6: PIP IN LIEU OF ARTIFICIAL TURF

- FLEX GROUND 50/50 MIX OR APPROVED EQUAL: STANDARD BLUE AND BLACK.
- FLEX GROUND 50/50 MIX OR APPROVED EQUAL: STANDARD GREEN AND BLACK.
- FLEX GROUND 50/50 MIX OR APPROVED EQUAL: STANDARD BEIGE AND BLACK.

CONSTRUCTION NOTES

1. CONTRACTOR SHALL CALL 811 TO LOCATE ALL EXISTING ABOVE OR BELOW GRADE ON-SITE UTILITIES PRIOR TO COMMENCEMENT OF WORK, INCLUDING PLANTING. THE LOCATIONS OF UTILITIES, STRUCTURES AND SERVICES SHOWN IN THE CONTRACT DOCUMENTS SHALL BE DEEMED TO BE APPROXIMATIONS ONLY. ALL DISCREPANCIES BETWEEN WHAT IS SHOWN AND THE ACTUAL FIELD CONDITIONS SHALL BE REPORTED TO THE OWNER'S REPRESENTATIVE. PRESERVE AND PROTECT EXISTING UTILITIES TO REMAIN FROM DAMAGE OR DISRUPTION, TYPICAL. MAINTAIN LOCATES DURING CONSTRUCTION FOR REFERENCE. CONTRACTOR SHALL RECORD ALL UTILITY MARKINGS ON A SEPARATE SET OF DRAWINGS. THIS SET SHALL BE KEPT ON-SITE FOR REFERENCE FOR DURATION OF CONTRACT.
2. CONTRACTOR TO COORDINATE WITH OWNER'S MAINTENANCE PERSONNEL TO IDENTIFY AND PROTECT ANY EXISTING OWNER MAINTAINED UTILITIES, WATER LINES, IRRIGATION LINES, IRRIGATION CONTROL WIRES OR OTHER IMPROVEMENTS PRIOR TO CONSTRUCTION.
3. CONTRACTOR TO COORDINATE UTILITY WORK, SLEEVE AND IRRIGATION INSTALLATION TO AVOID CONFLICTS BETWEEN UTILITIES, IRRIGATION EQUIPMENT AND THE PLACEMENT OF TREES, SHRUBS AND LANDSCAPE EDGING/MOWCURBS.
4. THE INFORMATION ON THIS SHEET IS INCOMPLETE UNLESS ACCOMPANIED BY THE CORRESPONDING SPECIFICATION SECTIONS AND DETAILS DEVELOPED FOR THIS PROJECT. REFER TO THOSE SPECIFICATIONS AND DETAILS FOR ADDITIONAL INFORMATION.
5. CONTRACTOR IS RESPONSIBLE FOR VERIFYING CONDITIONS IN THE FIELD PRIOR TO CONSTRUCTION AND NOTIFYING THE OWNER AND OWNER'S REPRESENTATIVES OF ANY DISCREPANCIES.
6. CONTRACTOR TO COORDINATE THESE PLANS WITH CIVIL, ELECTRICAL AND ARCHITECTURAL PLANS. IMMEDIATELY NOTIFY OWNER'S REPRESENTATIVE IF CONFLICTS BETWEEN PLANS ARE IDENTIFIED OR IF ADDITIONAL INFORMATION OR CLARIFICATION IS REQUIRED FOR COORDINATION.
7. PRESERVE AND PROTECT EXISTING IMPROVEMENTS TO REMAIN. REPAIR OR REPLACE ALL CURBS AND WALKS DAMAGED DURING CONSTRUCTION.
8. LAYOUT AND EXTENT OF EXCAVATION TO BE STAKED AND REVIEWED IN THE FIELD BY LANDSCAPE ARCHITECT AND/OR OWNER.
9. LIABLE FOR ENCROACHMENT: THE CONTRACTOR SHALL BE RESPONSIBLE FOR IDENTIFYING AND UNDERSTANDING THE LIMITS OR WORK. CONTRACTOR IS RESPONSIBLE FOR ANY COORDINATION OF ENCROACHMENT ONTO ADJACENT PROPERTY, RIGHTS-OF-WAY, EASEMENTS, SET-BACKS, OR ANY OTHER LEGAL PROPERTY RESTRICTIONS EITHER MARKED OR UNMARKED.

LAYOUT NOTES

1. THE CONTRACTOR SHALL COORDINATE ALL CONSTRUCTION ELEMENTS INCLUDING UTILITY LOCATIONS AND REQUIRED SLEEVING PRIOR TO INSTALLATION. VERIFY CRITICAL DIMENSIONS, REFERENCE POINT LOCATIONS AND CONSTRUCTION CONDITIONS PRIOR TO INITIATING CONSTRUCTION. TEMPORARY BENCHMARKS OR REFERENCE POINTS SHALL BE SET BY THE CONTRACTOR AS NECESSARY. NOTIFY THE OWNER'S REPRESENTATIVE IMMEDIATELY SHOULD A DISCREPANCY ARISE AND REDIRECT WORK TO AVOID DELAYS.
2. ALL DIMENSIONS SHALL BE VERIFIED IN FIELD AND CHALKED, STRING LINED OR FLAGGED BY THE CONTRACTOR PRIOR TO CONSTRUCTION. ANY MINOR ADJUSTMENTS MADE TO ACHIEVE OVERALL DESIGN LAYOUT SHALL BE ACCEPTED BY THE OWNER PRIOR TO CONSTRUCTION.
3. LAYOUT IS BASED ON THE POINT(S) OF BEGINNING (P.O.B.) AND BASELINE(S) OR GRID SYSTEM AS SHOWN, SEE ARCHITECTURAL AND CIVIL DRAWINGS FOR ADDITIONAL INFORMATION.
4. ALL LAYOUT AND GRADES SHALL BE COMPLETED BY A LICENSED SURVEYOR.
5. LAYOUT AND FINAL GRADES TO BE APPROVED BY OWNER'S REPRESENTATIVE. SEE SPECIFICATIONS FOR FINISH GRADE REQUIREMENTS FOR FIELDS.

MATERIAL NOTES

1. ALL REINFORCING AND FORMS SHALL BE SECURED IN PLACE AND ACCEPTED BY OWNER'S REPRESENTATIVE PRIOR TO PLACING ANY CONCRETE.
2. CONCRETE FINISHES SHALL BE AS NOTED. CONTRACTOR SHALL PROVIDE 4'X4' SAMPLES OF ALL SPECIFIED FINISHES OF CONCRETE USING THE SAME MATERIALS THAT WILL BE USED IN THE ACTUAL CONSTRUCTION FOR EACH TYPE SPECIFIED. SAMPLES SHALL BE PREPARED WELL ENOUGH IN ADVANCE OF SCHEDULED CONCRETE POUR TO ALLOW FOR REVIEW AND POSSIBLE RE-POURING OF UNACCEPTABLE SAMPLES. UNACCEPTABLE SAMPLES SHALL BE RE-PREPARED UNTIL ACCEPTED BY THE OWNER'S REPRESENTATIVE. ACCEPTED SAMPLES SHALL BE PROTECTED AND REMAIN ON SITE FOR REFERENCE UNTIL FINAL ACCEPTANCE.
3. ALL FENCES AND GATES SHOWN ON PLAN ARE GRAPHIC REPRESENTATIONS; REFER TO DETAILS AND SPECIFICATIONS FOR PRECISE LOCATION AND GATE OPERATION.
4. ASPHALT SHALL NOT BE INSTALLED UNTIL ALL EDGES AND SITE FURNISHING PADS ARE INSTALLED.
5. DO NOT PLACE ANY ATHLETIC FIELD MATERIAL UNTIL SUBMITTALS ARE FULLY APPROVED. MATERIAL SUBMITTALS WILL BE COMPARED TO DELIVERED MATERIAL.

UNDERGROUND SERVICE ALERT
ONE-CALL NUMBER
811
CALL TWO BUSINESS DAYS BEFORE YOU DIG



Michael Terrell
Landscape Architecture, PLLC
1421 N. Meadowwood Lane
Suite 150
Liberty Lake, WA
(509) 922-7449

C 2024
Michael Terrell - Landscape Architecture, PLLC
This drawing may not be reproduced in any form without written permission. All rights and title to these drawings, including but not limited to the design are retained.

LANDSCAPE ARCHITECT'S SEAL

REGISTERED LANDSCAPE ARCHITECT NO. 234
MICHAEL D. TERRELL
STATE OF IDAHO

TRAVERS PARK PLAYGROUND & SPLASH PAD CONSTRUCTION
2016 PINE ST | SANDPOINT, ID
CITY OF SANDPOINT

SAFETY SURFACING LAYOUT PLAN

REVISION	DATE
1	
2	
3	
4	

JOB NUMBER	22-100A
DATE	5/1/24
DRAWN BY	SLH
CHECKED BY	MDT

DRAWING 3 OF 12

L-2

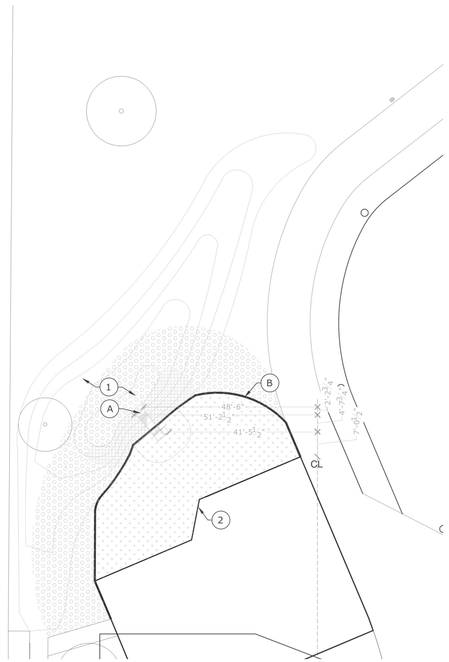

BASE BID CALLOUTS

1. SLEDDING HILL. SEE SHEET L-1.
2. PLAY AREA CURB. SEE SHEET LD-1, DETAIL A.

ALTERNATE #4 CALLOUTS

A. TYPE H ROLLER SLIDE WITH ADA TRANSFER SEAT AT BOTTOM OR APPROVED EQUAL. SEE SPECIFICATIONS.

B. 12" EWF PLAYGROUND CURB. SEE SHEET LD-1, DETAIL D.

LEGEND

- REPAIR AREA. SEEDED TURF WITH AUTOMATIC OVERHEAD IRRIGATION. ADJUST IRRIGATION AS NECESSARY TO ACHIEVE HEAD TO HEAD COVERAGE.
- PLANTER AREA WITH MINERAL MULCH TYPE 'A' OVER WEED BARRIER FABRIC. SEE PLANTING NOTES FOR TYPE.
- ENGINEERED WOOD FIBER SAFETY SURFACING. SEE SHEET LD-1, DETAIL D.
- BOULDER EMBANKMENT WALL AS PART OF ALTERNATE #4. SEE SHEET LD-1, DETAIL E.

B ALTERNATE #4 - EMBANKMENT BOULDERS, ROLLER SLIDE, SAFETY SURFACING CURB

SCALE: 1" = 20' - 0"

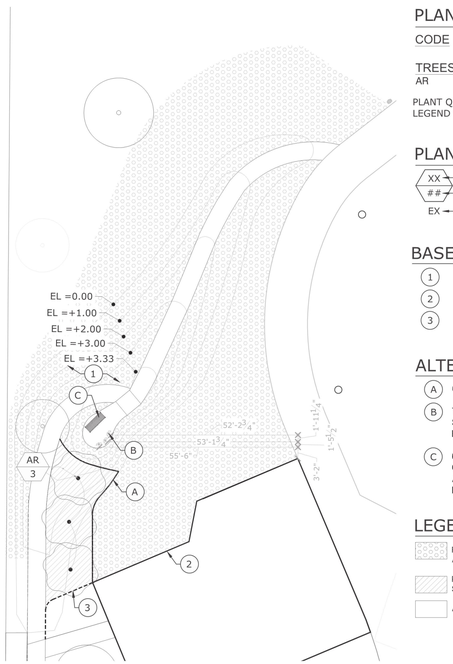

PLANT LEGEND

CODE	BOTANICAL NAME	COM. NAME	SIZE	H	X	W	QTY
TREES							
AR	Acer rubrum `Bowhall`	Bowhall Maple	2" Cal.	40`		15`	3

PLANT QUANTITY NOTE: CONTRACTOR SHALL VERIFY QUANTITIES IN PLANT LEGEND WITH PLANT SYMBOLS ON PLANS.

PLANT CALLOUTS

- XX — PLANT ABBREVIATION
- ## — NUMBER OF PLANTS
- EX — EXISTING

BASE BID CALLOUTS

1. SLEDDING HILL. SEE SHEET L-1.
2. 12" EWF PLAYGROUND CURB AS PART OF BASE BID, SEE SHEET L-1, DETAIL D.
3. 6" CONCRETE MOWCURB. SEE SHEET LD-2, DETAIL F.

ALTERNATE #3 CALLOUTS

A. 6" CONCRETE MOWCURB. SEE SHEET LD-2, DETAIL F.

B. TYPE G FREE NOTES HARMONY PARK - BUTTERFLY ENSEMBLE, SURFACE MOUNTED. TURQUOISE, YELLOW, AND ORANGE BUTTERFLIES OR APPROVED EQUAL. SEE SPECIFICATIONS.

C. 6' BENCH ON CONCRETE PAD. DUMOR BENCH #165, DOUGLAS FIR OR THERMALLY MODIFIED RED OAK SEAT. CENTER AND END ARMREST OR APPROVED EQUAL. OWNER PROVIDED, OWNER INSTALLED.

LEGEND

- REPAIR AREA. SEEDED TURF WITH AUTOMATIC OVERHEAD IRRIGATION. ADJUST IRRIGATION AS NECESSARY TO ACHIEVE HEAD TO HEAD COVERAGE.
- PLANTER AREA WITH MINERAL MULCH TYPE 'A' OVER WEED BARRIER FABRIC. SEE PLANTING NOTES FOR TYPE.
- ASPHALT PATH. ALTERNATE #8: 4" CONCRETE WITH MEDIUM BROOM FINISH.

A ALTERNATE #3 - ASPHALT PATH, PLAZA, BUTTERFLY MUSIC ENSEMBLE

SCALE: 1" = 20' - 0"

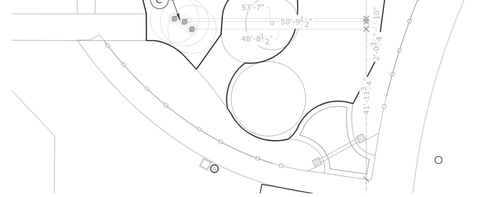

BASE BID CALLOUTS

1. SLEDDING HILL. SEE SHEET L-1.
2. PLAY AREA CURB. SEE SHEET LD-1, DETAIL A.

ALTERNATE #5 CALLOUTS

A. TYPE I ID SCULPTURE BOULDER 1 WITH RAMP NET OR APPROVED EQUAL. SEE SPECIFICATIONS.

B. 12" EWF PLAYGROUND CURB. SEE SHEET LD-1, DETAIL D.

C. TYPE J ID SCULPTURE MUSHROOM STEPPERS OR APPROVED EQUAL. SEE SPECIFICATIONS.

LEGEND

- REPAIR AREA. SEEDED TURF WITH AUTOMATIC OVERHEAD IRRIGATION. ADJUST IRRIGATION AS NECESSARY TO ACHIEVE HEAD TO HEAD COVERAGE.
- ENGINEERED WOOD FIBER SAFETY SURFACING. SEE SHEET LD-1, DETAIL D.

C ALTERNATE #5 - ID SCULPTURE PLAY EQUIPMENT

SCALE: 1" = 20' - 0"

CONSTRUCTION NOTES

1. CONTRACTOR SHALL CALL 811 TO LOCATE ALL EXISTING ABOVE OR BELOW GRADE ON-SITE UTILITIES PRIOR TO COMMENCEMENT OF WORK, INCLUDING PLANTING. THE LOCATIONS OF UTILITIES, STRUCTURES AND SERVICES SHOWN IN THE CONTRACT DOCUMENTS SHALL BE DEEMED TO BE APPROXIMATIONS ONLY. ALL DISCREPANCIES BETWEEN WHAT IS SHOWN AND THE ACTUAL FIELD CONDITIONS SHALL BE REPORTED TO THE OWNER'S REPRESENTATIVE. PRESERVE AND PROTECT EXISTING UTILITIES TO REMAIN FROM DAMAGE OR DISRUPTION, TYPICAL. MAINTAIN LOCATES DURING CONSTRUCTION FOR REFERENCE. CONTRACTOR SHALL RECORD ALL UTILITY MARKINGS ON A SEPARATE SET OF DRAWINGS. THIS SET SHALL BE KEPT ON-SITE FOR REFERENCE FOR DURATION OF CONTRACT.
2. CONTRACTOR TO COORDINATE WITH OWNER'S MAINTENANCE PERSONNEL TO IDENTIFY AND PROTECT ANY EXISTING OWNER MAINTAINED UTILITIES, WATER LINES, IRRIGATION LINES, IRRIGATION CONTROL WIRES OR OTHER IMPROVEMENTS PRIOR TO CONSTRUCTION.
3. CONTRACTOR TO COORDINATE UTILITY WORK, SLEEVE AND IRRIGATION INSTALLATION TO AVOID CONFLICTS BETWEEN UTILITIES, IRRIGATION EQUIPMENT AND THE PLACEMENT OF TREES, SHRUBS AND LANDSCAPE EDGING/MOWCURBS.
4. THE INFORMATION ON THIS SHEET IS INCOMPLETE UNLESS ACCOMPANIED BY THE CORRESPONDING SPECIFICATION SECTIONS AND DETAILS DEVELOPED FOR THIS PROJECT. REFER TO THOSE SPECIFICATIONS AND DETAILS FOR ADDITIONAL INFORMATION.
5. CONTRACTOR IS RESPONSIBLE FOR VERIFYING CONDITIONS IN THE FIELD PRIOR TO CONSTRUCTION AND NOTIFYING THE OWNER AND OWNER'S REPRESENTATIVES OF ANY DISCREPANCIES.
6. CONTRACTOR TO COORDINATE THESE PLANS WITH CIVIL, ELECTRICAL AND ARCHITECTURAL PLANS. IMMEDIATELY NOTIFY OWNER'S REPRESENTATIVE IF CONFLICTS BETWEEN PLANS ARE IDENTIFIED OR IF ADDITIONAL INFORMATION OR CLARIFICATION IS REQUIRED FOR COORDINATION.
7. PRESERVE AND PROTECT EXISTING IMPROVEMENTS TO REMAIN. REPAIR OR REPLACE ALL CURBS AND WALKS DAMAGED DURING CONSTRUCTION.
8. LAYOUT AND EXTENT OF EXCAVATION TO BE STAKED AND REVIEWED IN THE FIELD BY LANDSCAPE ARCHITECT AND/OR OWNER.
9. LIABLE FOR ENCROACHMENT: THE CONTRACTOR SHALL BE RESPONSIBLE FOR IDENTIFYING AND UNDERSTANDING THE LIMITS OR WORK. CONTRACTOR IS RESPONSIBLE FOR ANY COORDINATION OF ENCROACHMENT ONTO ADJACENT PROPERTY, RIGHTS-OF-WAY, EASEMENTS, SET-BACKS, OR ANY OTHER LEGAL PROPERTY RESTRICTIONS EITHER MARKED OR UNMARKED.

LAYOUT NOTES

1. THE CONTRACTOR SHALL COORDINATE ALL CONSTRUCTION ELEMENTS INCLUDING UTILITY LOCATIONS AND REQUIRED SLEEVING PRIOR TO INSTALLATION. VERIFY CRITICAL DIMENSIONS, REFERENCE POINT LOCATIONS AND CONSTRUCTION CONDITIONS PRIOR TO INITIATING CONSTRUCTION. TEMPORARY BENCHMARKS OR REFERENCE POINTS SHALL BE SET BY THE CONTRACTOR AS NECESSARY. NOTIFY THE OWNER'S REPRESENTATIVE IMMEDIATELY SHOULD A DISCREPANCY ARISE AND REDIRECT WORK TO AVOID DELAYS.
2. ALL DIMENSIONS SHALL BE VERIFIED IN FIELD AND CHALKED, STRING LINED OR FLAGGED BY THE CONTRACTOR PRIOR TO CONSTRUCTION. ANY MINOR ADJUSTMENTS MADE TO ACHIEVE OVERALL DESIGN LAYOUT SHALL BE ACCEPTED BY THE OWNER PRIOR TO CONSTRUCTION.
3. LAYOUT IS BASED ON THE POINT(S) OF BEGINNING (P.O.B.) AND BASELINE(S) OR GRID SYSTEM AS SHOWN, SEE ARCHITECTURAL AND CIVIL DRAWINGS FOR ADDITIONAL INFORMATION.
4. ALL LAYOUT AND GRADES SHALL BE COMPLETED BY A LICENSED SURVEYOR.
5. LAYOUT AND FINAL GRADES TO BE APPROVED BY OWNER'S REPRESENTATIVE. SEE SPECIFICATIONS FOR FINISH GRADE REQUIREMENTS FOR FIELDS.

MATERIAL NOTES

1. ALL REINFORCING AND FORMS SHALL BE SECURED IN PLACE AND ACCEPTED BY OWNER'S REPRESENTATIVE PRIOR TO PLACING ANY CONCRETE.
2. CONCRETE FINISHES SHALL BE AS NOTED. CONTRACTOR SHALL PROVIDE 4'X4' SAMPLES OF ALL SPECIFIED FINISHES OF CONCRETE USING THE SAME MATERIALS THAT WILL BE USED IN THE ACTUAL CONSTRUCTION FOR EACH TYPE SPECIFIED. SAMPLES SHALL BE PREPARED WELL ENOUGH IN ADVANCE OF SCHEDULED CONCRETE POUR TO ALLOW FOR REVIEW AND POSSIBLE RE-POURING OF UNACCEPTABLE SAMPLES. UNACCEPTABLE SAMPLES SHALL BE RE-PREPARED UNTIL ACCEPTED BY THE OWNER'S REPRESENTATIVE. ACCEPTED SAMPLES SHALL BE PROTECTED AND REMAIN ON SITE FOR REFERENCE UNTIL FINAL ACCEPTANCE.
3. ALL FENCES AND GATES SHOWN ON PLAN ARE GRAPHIC REPRESENTATIONS; REFER TO DETAILS AND SPECIFICATIONS FOR PRECISE LOCATION AND GATE OPERATION.
4. ASPHALT SHALL NOT BE INSTALLED UNTIL ALL EDGES AND SITE FURNISHING PADS ARE INSTALLED.
5. DO NOT PLACE ANY ATHLETIC FIELD MATERIAL UNTIL SUBMITTALS ARE FULLY APPROVED. MATERIAL SUBMITTALS WILL BE COMPARED TO DELIVERED MATERIAL.



Michael Terrell
Landscape Architecture, PLLC
1421 N. Meadowwood Lane
Suite 150
Liberty Lake, WA
(509) 922-7449

C 2024
Michael Terrell - Landscape Architecture, PLLC
This drawing may not be reproduced in any form without written permission. All rights and title to these drawings, including but not limited to the design are retained.

LANDSCAPE ARCHITECT'S SEAL

REGISTERED LANDSCAPE ARCHITECT NO. 234
MICHAEL S. TERRELL
STATE OF IDAHO

TRAVERS PARK PLAYGROUND & SPLASH PAD CONSTRUCTION
2016 PINE ST | SANDPOINT, ID
CITY OF SANDPOINT

NORTH HILL ALTERNATES

REVISION	DATE
1	
2	
3	
4	

JOB NUMBER	22-100A
DATE	5/1/24
DRAWN BY	SLH
CHECKED BY	MDT

UNDERGROUND SERVICE ALERT
ONE-CALL NUMBER
811
CALL TWO BUSINESS DAYS BEFORE YOU DIG

DRAWING 4 OF 12

L-3

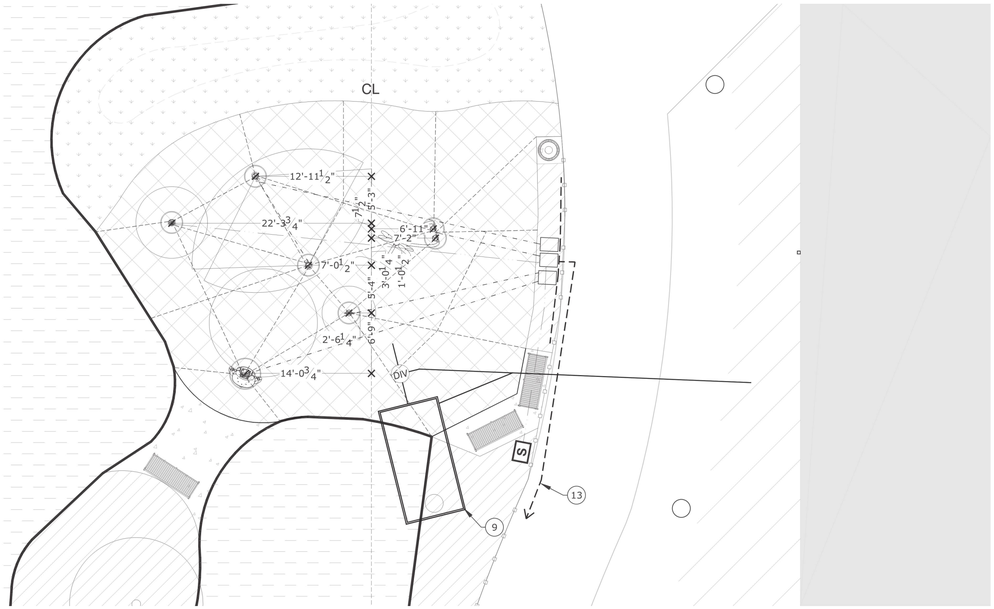

A SPLASH PAD LAYOUT PLAN - BASE BID

SCALE: 1/8" = 1'-0"

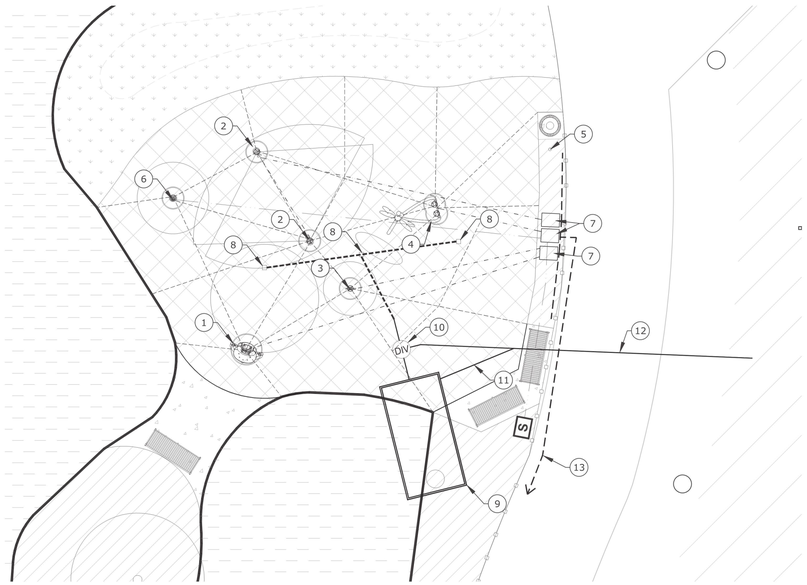

B SPLASH PAD CONSTRUCTION PLAN

SCALE: 1/8" = 1'-0"

SPLASH PAD EQUIPMENT CALLOUTS - BASE BID

1. WATERPLAY SLING SOAKER OR APPROVED EQUAL. INSTALL PER MANUFACTURERS SPECIFICATIONS.
2. WATERPLAY SPLASH BLASTER OR APPROVED EQUAL. INSTALL PER MANUFACTURERS SPECIFICATIONS.
3. WATERPLAY FISH OR APPROVED EQUAL. INSTALL PER MANUFACTURERS SPECIFICATIONS.
4. WATERPLAY SPARX DRAGON FLY OR APPROVED EQUAL. INSTALL PER MANUFACTURER'S SPECIFICATIONS.
5. HOURS/RULES SIGN. SEE SHEET LD-3, DETAIL A.
6. ACTIVATION BOLLARD OR APPROVED EQUAL. INSTALL AS PER MANUFACTURERS SPECIFICATIONS.
7. SPLASH PAD CONTROL VALVES AND VALVE BOXES. SEE CIVIL DRAWINGS, FOR WATER SERVICE.
8. NDS HEAVY DUTY DRAIN OR APPROVED EQUAL. SEE SHEET LD-3, DETAIL E.
9. CONCRETE STORAGE TANK, SEE CIVIL DRAWINGS AND SPECIFICATIONS.
10. DIVERTER STRAINER. SEE SHEET LD-3, DETAIL D.
11. TANK OVERFLOW TO BUILDING STORM DRAIN. SEE CIVIL DRAWINGS, C1.0.
12. 4" DIVERTER VALVE CONNECTION TO STORM DRAIN FOR WINTER OPERATION. SEE SHEET LD-3, DETAIL G.
13. SEE CIVIL WATER CONNECTION FOR SPLASH PAD. SEE CIVIL FOR LOCATION AND EXTENT.

SPLASH PAD LEGEND

- SPLASH PAD. MEDIUM BROOM FINISH CONCRETE PAD, SEE SPECIFICATIONS.
- S — SPLASH PAD CONTROLLER. SEE SPECIFICATIONS.
- SAW JOINTS. SAW CUT JOINTS TO BE LAID OUT FOR APPROVAL BY OWNER PRIOR TO CUTTING, TYPICAL.
- CONCRETE EXPANSION JOINT. FOR EXPANSION JOINTS ADJACENT TO SPLASH PAD, EXPANSION JOINTS SHALL HAVE WATERPROOF JOINT SEALER APPLIED.
- 1 1/2" CLASS 200 PIPE FROM SPLASH PAD NOZZLE TO VALVE BOX, IN 6" SCH 40 PVC SLEEVE.
- SPLASH PAD CONTROL WIRE IN CONDUIT FROM ACTIVATOR AND VALVES TO SPLASH PAD CONTROLLER.
- 2" SCH 40 PVC POTABLE WATER SUPPLY.
- DRAINAGE: 6" CLASS 200 PVC. BASE BID.
- 4' TALL CHAINLINK FENCE, BLACK. SEE SPECIFICATIONS.

CONSTRUCTION NOTES

1. SCOPE OF WORK: THE CONTRACTOR SHALL PROVIDE ALL LABOR, MATERIALS, TRANSPORTATION AND SERVICES NECESSARY TO COMPLETE THE WORK SHOWN ON THE PLAN.
2. SITE VERIFICATION: PRIOR TO COMMENCEMENT OF WORK THE CONTRACTOR SHALL VERIFY, AT THE SITE, ALL CONDITIONS AND DIMENSIONS SHOWN ON THE PLAN AFFECTING THE INTENDED LIMITS OF THE DEMOLITION WORK. ANY DISCREPANCIES SHALL BE REPORTED TO THE LANDSCAPE ARCHITECT IMMEDIATELY.
3. NOTIFICATION OF DISCREPANCIES: THE CONTRACTOR SHALL VERIFY ALL UTILITY LOCATIONS, EXISTING DRAINAGE STRUCTURES, FINISH CURB & WALK ELEVATIONS WITH THE LANDSCAPE ARCHITECT IN THE FIELD. ANY DISCREPANCIES BETWEEN THE FIELD CONDITIONS AND THE CONTRACT DOCUMENTS AND/OR DESIGN INTENT AFFECTING THE SUCCESSFUL COMPLETION AND COST OF THE PROJECT SHALL BE REPORTED TO THE OWNER AND LANDSCAPE ARCHITECT IMMEDIATELY.
4. ALL FORMS AND ALIGNMENT OF HARDSCAPE ITEMS SHALL BE REVIEWED AND APPROVED BY LANDSCAPE ARCHITECT PRIOR TO POURING CONCRETE. CONTRACTOR SHALL NOTIFY THE LANDSCAPE ARCHITECT A MINIMUM 48 HOURS PRIOR TO THE DESIRED TIME OF A SITE VISIT.
5. ONLY SURFACE FEATURES ARE SHOWN ON THIS PLAN. UNDERGROUND UTILITIES ARE NOT DEPICTED. PRESERVE AND PROTECT EXISTING UTILITIES FROM DAMAGE OR DISRUPTION, TYPICAL. IT IS THE RESPONSIBILITY OF THE CONTRACTOR TO LOCATE ALL UTILITIES PRIOR TO CONSTRUCTION.
6. THE LOCATION OF FEATURES TO BE CONSTRUCTED, NOT SPECIFICALLY DIMENSIONED MAY BE DETERMINED BY SCALE. VERIFY ALL SUCH CONDITIONS WITH THE LANDSCAPE ARCHITECT PRIOR TO CONSTRUCTION.
7. ALL CURVE-TO-CURVE AND CURVE-TO-TANGENT LINES SHALL BE NEAT, TRIM, SMOOTH AND UNIFORM.
8. ENSURE THAT SPLASH PAD GRADING AND DRAIN INSTALLATION PROHIBITS THE ACCUMULATION OF STANDING WATER.
9. ALL SPLASH PAD ELEMENTS TO USE LOW FLOW NOZZLE OPTIONS.
10. CONTROLLER TO BE PLACED WITHIN RESTROOM AS DIRECTED. CONDUIT TO CONNECT CONTROLLER ACTIVATION BOLLARD AND VALVES.
11. SLEEVE ALL PIPE WITH SCHEDULE 80 PVC, SIZE 4" MIN.

UNDERGROUND SERVICE ALERT
ONE-CALL NUMBER
811
CALL TWO BUSINESS DAYS BEFORE YOU DIG



Michael Terrell
Landscape Architecture, PLLC
1421 N. Meadowwood Lane
Suite 150
Liberty Lake, WA
(509) 922-7449

© 2024
Michael Terrell - Landscape Architecture, PLLC
This drawing may not be reproduced in any form without written permission. All rights and title to these drawings, including but not limited to the design are retained.

LANDSCAPE ARCHITECT'S SEAL

REGISTERED LANDSCAPE ARCHITECT NO. 234
MICHAEL D. TERRELL
STATE OF IDAHO

TRAVERS PARK PLAYGROUND & SPLASH PAD CONSTRUCTION
2016 PINE ST | SANDPOINT, ID
CITY OF SANDPOINT

SPLASH PAD - BASE BID

REVISION	DATE
1	
2	
3	
4	

JOB NUMBER	22-100A
DATE	5/1/24
DRAWN BY	SLH
CHECKED BY	MDT

DRAWING 5 OF 12

L-4



B SPLASH PAD ALTERNATE #1 LAYOUT PLAN

SCALE: 1/8" = 1'-0"



A SPLASH PAD ALTERNATE #1 & #2 CONSTRUCTION PLAN

SCALE: 1/8" = 1'-0"

ALTERNATE #1: SPLASH PAD EQUIPMENT

- (A) WATERPLAY SPRAY TUNNEL 8 OR APPROVED EQUAL. INSTALL PER MANUFACTURERS SPECIFICATIONS.
- (B) WATERPLAY HOPPER2 OR APPROVED EQUAL. INSTALL PER MANUFACTURERS SPECIFICATIONS.
- (C) WATERPLAY WATER WEAVER 1 OR APPROVED EQUAL. INSTALL PER MANUFACTURERS SPECIFICATIONS.
- (D) WATERPLAY FUN BRELLA OR APPROVED EQUAL. INSTALL PER MANUFACTURERS SPECIFICATIONS.

ALTERNATE #2: SPLASH PAD IRRIGATION BOOSTER PUMP

- (E) IRRIGATION BOOSTER STATION. SEE SHEET LD-4, DETAIL C.
- (F) WET WELL AND PUMP. SEE SHEET LD-4, DETAIL B.
- (G) TO IRRIGATION SERVICE. SEE SHEET LD-4, DETAIL B.
- (H) TO SANITARY SEWER. SEE SHEET LD-4, DETAIL B.
- (I) CONCRETE STORAGE TANK. SEE SHEET LD-4, DETAIL A.

SPLASH PAD EQUIPMENT CALLOUTS

1. **BASE BID** DRAINS AND DRAINAGE, SEE SHEET L-4.
2. VALVE BOXES. SEE SHEET LD-3, DETAIL C.
3. **BASE BID** DIVERTER STRAINER. SEE SHEET LD-3, DETAIL D.
4. SEE CIVIL WATER CONNECTION FOR SPLASH PAD. SEE CIVIL FOR LOCATION AND EXTENT.

SPLASH PAD LEGEND

- SPLASH PAD. 4" THICK, MEDIUM BROOM FINISH CONCRETE PAD, SEE SPECIFICATIONS.
- S SPLASH PAD CONTROLLER. SEE SPECIFICATIONS.
- SAW JOINTS. SAW CUT JOINTS TO BE LAID OUT FOR APPROVAL BY OWNER PRIOR TO CUTTING, TYPICAL.
- CONCRETE EXPANSION JOINT. FOR EXPANSION JOINTS ADJACENT TO SPLASH PAD, EXPANSION JOINTS SHALL HAVE WATERPROOF JOINT SEALER APPLIED.
- 1 1/2" CLASS 200 PIPE FROM SPLASH PAD NOZZLE TO VALVE BOX, IN 6" SCH 40 PVC SLEEVE.
- SPLASH PAD CONTROL WIRE IN CONDUIT FROM ACTIVATOR AND VALVES TO SPLASH PAD CONTROLLER IN NEW RESTROOM. BASE BID.
- 2" SCH 40 PVC POTABLE WATER SUPPLY. BASE BID.
- DRAINAGE: 6" CLASS 200 PVC. BASE BID.

CONSTRUCTION NOTES

1. SCOPE OF WORK: THE CONTRACTOR SHALL PROVIDE ALL LABOR, MATERIALS, TRANSPORTATION AND SERVICES NECESSARY TO COMPLETE THE WORK SHOWN ON THE PLAN.
2. SITE VERIFICATION: PRIOR TO COMMENCEMENT OF WORK THE CONTRACTOR SHALL VERIFY, AT THE SITE, ALL CONDITIONS AND DIMENSIONS SHOWN ON THE PLAN AFFECTING THE INTENDED LIMITS OF THE DEMOLITION WORK. ANY DISCREPANCIES SHALL BE REPORTED TO THE LANDSCAPE ARCHITECT IMMEDIATELY.
3. NOTIFICATION OF DISCREPANCIES: THE CONTRACTOR SHALL VERIFY ALL UTILITY LOCATIONS, EXISTING DRAINAGE STRUCTURES, FINISH CURB & WALK ELEVATIONS WITH THE LANDSCAPE ARCHITECT IN THE FIELD. ANY DISCREPANCIES BETWEEN THE FIELD CONDITIONS AND THE CONTRACT DOCUMENTS AND/OR DESIGN INTENT AFFECTING THE SUCCESSFUL COMPLETION AND COST OF THE PROJECT SHALL BE REPORTED TO THE OWNER AND LANDSCAPE ARCHITECT IMMEDIATELY.
4. ALL FORMS AND ALIGNMENT OF HARDSCAPE ITEMS SHALL BE REVIEWED AND APPROVED BY LANDSCAPE ARCHITECT PRIOR TO POURING CONCRETE. CONTRACTOR SHALL NOTIFY THE LANDSCAPE ARCHITECT A MINIMUM 48 HOURS PRIOR TO THE DESIRED TIME OF A SITE VISIT.
5. ONLY SURFACE FEATURES ARE SHOWN ON THIS PLAN. UNDERGROUND UTILITIES ARE NOT DEPICTED. PRESERVE AND PROTECT EXISTING UTILITIES FROM DAMAGE OR DISRUPTION, TYPICAL. IT IS THE RESPONSIBILITY OF THE CONTRACTOR TO LOCATE ALL UTILITIES PRIOR TO CONSTRUCTION.
6. THE LOCATION OF FEATURES TO BE CONSTRUCTED, NOT SPECIFICALLY DIMENSIONED MAY BE DETERMINED BY SCALE. VERIFY ALL SUCH CONDITIONS WITH THE LANDSCAPE ARCHITECT PRIOR TO CONSTRUCTION.
7. ALL CURVE-TO-CURVE AND CURVE-TO-TANGENT LINES SHALL BE NEAT, TRIM, SMOOTH AND UNIFORM.
8. ENSURE THAT SPLASH PAD GRADING AND DRAIN INSTALLATION PROHIBITS THE ACCUMULATION OF STANDING WATER.
9. ALL SPLASH PAD ELEMENTS TO USE LOW FLOW NOZZLE OPTIONS.
10. CONTROLLER TO BE PLACED WITHIN RESTROOM AS DIRECTED. CONDUIT TO CONNECT CONTROLLER ACTIVATION BOLLARD AND VALVES.
11. SLEEVE ALL PIPE WITH SCHEDULE 80 PVC, SIZE 4" MIN.

UNDERGROUND SERVICE ALERT
ONE-CALL NUMBER
811
CALL TWO BUSINESS DAYS BEFORE YOU DIG



Michael Terrell
Landscape Architecture, PLLC
1421 N. Meadowwood Lane
Suite 150
Liberty Lake, WA
(509) 922-7449

C 2024
Michael Terrell - Landscape Architecture, PLLC
This drawing may not be reproduced in any form without written permission. All rights and title to these drawings, including but not limited to the design are retained.

LANDSCAPE ARCHITECT'S SEAL

REGISTERED LANDSCAPE ARCHITECT NO. 234
MICHAEL D. TERRELL
STATE OF IDAHO

TRAVERS PARK PLAYGROUND & SPLASH PAD CONSTRUCTION
2016 PINE ST | SANDPOINT, ID
CITY OF SANDPOINT

SPLASH PAD - ALTERNATES

REVISION	DATE
1	
2	
3	
4	

JOB NUMBER	22-100A
DATE	5/1/24
DRAWN BY	SLH
CHECKED BY	MDT

DRAWING 6 OF 12

L-5

UNDERGROUND SERVICE ALERT
ONE-CALL NUMBER
811
CALL TWO BUSINESS DAYS BEFORE YOU DIG



A PLANTING PLAN

CALLOUTS

1. GATEWAY ELEMENT. OWNER PROVIDED, OWNER INSTALLED.
2. SHELTER AND CONCRETE PAD TO BE RELOCATED AS PART OF SPORT BUILDING CONSTRUCTION. BY OTHERS.
3. BIKE RACKS ON CONCRETE PAD. BIKE RACK: SPORTWORKS TOFINO NO SCRATCH BIKE RACK, SEE SPECIFICATIONS. OWNER PROVIDED, OWNER INSTALLED.
4. TRASH RECEPTACLE ON CONCRETE PAD. DUMOR #107, 22 GALLON STEEL RECEPTACLE. OWNER PROVIDED, OWNER INSTALLED.
5. 6' BENCH ON CONCRETE PAD. DUMOR BENCH #165, DOUGLAS FIR OR THERMALLY MODIFIED RED OAK SEAT. CENTER AND END ARMREST OR APPROVED EQUAL. OWNER PROVIDED, OWNER INSTALLED.
6. 9" EWF PLAYGROUND CURB. SEE SHEET LD-1, DETAIL D.
7. 6" CONCRETE MOWCURB. SEE SHEET LD-2, DETAIL F.
8. EXISTING TREE TO REMAIN, PRESERVE AND PROTECT. SEE SHEET LD-2 DETAIL I.
9. PLAY TURF PLAYGROUND CURB. SEE SHEET LD-1, DETAIL B AND C.
10. 320 SQ IN STEEL PARK GRILL ON SINGLE POST WITH EMBEDDED MOUNTING. OWNER PROVIDED, OWNER INSTALLED.
11. CONCRETE HOT COAL DISPOSAL BIN. OWNER PROVIDED, OWNER INSTALLED.
12. PLAY AREA CURB AND WALK. SEE SHEET LD-1, DETAIL A.
13. PLAY AREA CURB ADJACENT TO FIRE LANE. SEE SHEET LD-1, DETAIL E.
14. LOGS AND BOULDERS PROVIDED BY OWNER, TYP. LOGS ARE 12-24" DIAMETER AND APPROXIMATELY 8' LONG. SEE SHEET LD-1, DETAIL I AND LD-2, DETAIL L.

LEGEND

- ARTIFICIAL TURF SAFETY SURFACING, **BASE BID**. SEE SHEET LD-1, DETAIL C.
- SODDED TURF WITH AUTOMATIC OVERHEAD IRRIGATION, **BASE BID**.
- REPAIR AREA. SEEDED TURF WITH AUTOMATIC OVERHEAD IRRIGATION, **BASE BID**. ALTERNATE #7: INSTALL SODDED TURF GRASS. SEE SPECIFICATIONS.
- PLANTER AREA WITH MINERAL MULCH TYPE 'A' OVER WEED BARRIER FABRIC. SEE PLANTING NOTES FOR TYPE.
- SPLASH PAD. SEE SHEET L-4.
- 4" BROOM FINISH CONCRETE WALK.
- ASPHALT PATH, **BASE BID**. ALTERNATE #8: 4" CONCRETE WITH MEDIUM BROOM FINISH. SEE SPECIFICATIONS.
- LANDSCAPE AND IRRIGATION REPAIR BY OTHERS AS PART OF BUILDING CONTRACT.
- 4' TALL CHAINLINK FENCE, BLACK. SEE SPECIFICATIONS.

PLANT LEGEND

CODE	BOTANICAL NAME	COMMON NAME	SIZE	HEIGHT	WIDTH	QTY
TREES						
AR	Acer rubrum `Bowhall`	Bowhall Maple	2" Cal.	40`	15`	7
AA2	Acer rubrum 'JFS-KW78' TM	Armstrong Gold Red Maple	2" Cal.	40`	12`	8
AB	Acer saccharum `Bailsta`	Fall Fiesta® Sugar Maple	2" Cal.	60`	30`	1
PF	Pinus flexilis `Vanderwolf`s Pyramid`	Vanderwolf`s Pyramid Pine	7-8` Tall	25`	15`	3
SW	Syringa reticulata pekinensis 'WFH2'	Great Wall™ Peking Lilac	2" Cal.	20`	12`	3
TG	Tilia cordata `Greenspire`	Greenspire Littleleaf Linden	2" Cal.	45`	20`	3
SHRUBS						
CK	Cornus sericea `Kelseyi`	Kelseyi Dogwood	2 gal			14
HS	Helictotrichon sempervirens	Blue Oat Grass	1 gal			18
H	Hemerocallis x `Stella de Oro`	Stella de Oro Daylily	1 gal			12
MA	Mahonia aquifolium `Compacta`	Oregon Grape	2 gal			9
PV	Panicum virgatum `Shenandoah`	Switch Grass	1 gal.			16
PS3	Phlox subulata `Emerald Blue`	Emerald Blue Moss Phlox	3 gal			5
PW	Phlox subulata 'Red Wings'	Red Wings Creeping Phlox	1 gal.			9
RM	Rosa x `Meiboulka` P.P.A.F.	Oso Easy Cherry Pie Rose	2 gal			4
SB	Stachys byzantina	Lamb's Ear	1 gal.			9
TM	Thymus serpyllum 'Magic Carpet'	Magic Carpet Creeping Thyme	1 gal.			17

PLANT QUANTITY NOTE: CONTRACTOR SHALL VERIFY QUANTITIES IN PLANT LEGEND WITH PLANT SYMBOLS ON PLANS.

PLANT CALLOUTS

- XX / ## — PLANT ABBREVIATION / NUMBER OF PLANTS
- EX — EXISTING

PLANTING NOTES

1. CONTRACTOR SHALL CALL 811 TO LOCATE ALL EXISTING ABOVE OR BELOW GRADE ON-SITE UTILITIES PRIOR TO COMMENCEMENT OF WORK, INCLUDING PLANTING. THE LOCATIONS OF UTILITIES, STRUCTURES AND SERVICES SHOWN IN THE CONTRACT DOCUMENTS SHALL BE DEEMED TO BE APPROXIMATIONS ONLY. ALL DISCREPANCIES BETWEEN WHAT IS SHOWN AND THE ACTUAL FIELD CONDITIONS SHALL BE REPORTED TO THE OWNER'S REPRESENTATIVE. PRESERVE AND PROTECT EXISTING UTILITIES TO REMAIN FROM DAMAGE OR DISRUPTION, TYPICAL. MAINTAIN LOCATES DURING CONSTRUCTION FOR REFERENCE. CONTRACTOR SHALL RECORD ALL UTILITY MARKINGS ON A SEPARATE SET OF DRAWINGS. THIS SET SHALL BE KEPT ON-SITE FOR REFERENCE FOR DURATION OF CONTRACT.
2. CONTRACTOR TO COORDINATE WITH OWNER'S MAINTENANCE PERSONNEL TO IDENTIFY AND PROTECT ANY EXISTING OWNER MAINTAINED UTILITIES, WATER LINES, IRRIGATION LINES, IRRIGATION CONTROL WIRES OR OTHER IMPROVEMENTS PRIOR TO CONSTRUCTION.
3. THE INFORMATION ON THIS SHEET IS INCOMPLETE UNLESS ACCOMPANIED BY THE CORRESPONDING SPECIFICATION SECTION(S) AND DETAILS DEVELOPED FOR THIS PROJECT. REFER TO THOSE SPECIFICATIONS AND DETAILS FOR ADDITIONAL INFORMATION.
4. CONTRACTOR IS RESPONSIBLE FOR VERIFYING CONDITIONS IN THE FIELD PRIOR TO CONSTRUCTION AND NOTIFYING THE OWNER AND OWNERS REPRESENTATIVES OF DISCREPANCIES. VERIFY THAT SUB GRADE PREPARATION HAS BEEN COMPLETED TO ACCEPTABLE TOLERANCES PRIOR TO COMMENCEMENT OF WORK. CONTRACTOR ACCEPTS SUB GRADES UPON COMMENCEMENT OF WORK AND IS RESPONSIBLE FOR ANY CORRECTIONS REQUIRED AFTER WORK BEGINS.
5. REMOVE ALL CONSTRUCTION DEBRIS, CONCRETE, MORTAR, ROCKS, ETC FROM LANDSCAPE AREAS PRIOR TO SUB GRADE PREPARATION AND INSTALLATION OF PLANTING SOIL.
6. TREES AND SHRUBS TO MEET REQUIREMENTS OF AMERICAN STANDARD FOR NURSERY STOCK FOR SIZE AND MATERIAL CONDITION.
7. PLANT COUNTS IN LEGEND ARE FOR REFERENCE ONLY. PLANT SYMBOLS DICTATE THE REQUIRED PLANTS.
8. PLANTING SOIL SCHEDULE (SEE SPECIFICATIONS):
   a. PLANTING AREAS: 6" OF APPROVED PLANTING SOIL TYPE 'B' - WITTKOPF TURF BUILDER SOIL. SUBMIT FOR APPROVAL.
   b. TURF AND HYDROSEEDED AREAS: 4" OF APPROVED PLANTING SOIL TYPE 'B' - WITTKOPF TURF BUILDER SOIL. SUBMIT FOR APPROVAL.
9. MINERAL MULCH SCHEDULE (SEE SPECIFICATIONS):
   a. PLANTING AREAS: 2" OF MINERAL MULCH TYPE 'A'. 1" CRUSHED GRANITE, CLEAN TO BE SELECTED BY OWNER OVER NON-WOVEN WEED BARRIER FABRIC. SUBMIT FOR APPROVAL.
10. ORGANIC MULCH SCHEDULE (SEE SPECIFICATIONS):
    a. PLANTING AREAS: 2" OF ORGANIC MULCH TYPE 'B'. APPROVED COMPOST. SUBMIT FOR APPROVAL. SEE SPECIFICATIONS.
11. ALL LANDSCAPE AREAS TO BE IRRIGATED BY AN AUTOMATIC IRRIGATION SYSTEM. SEE IRRIGATION PLANS AND SPECIFICATIONS.
12. TREE LOCATIONS MAY VARY DEPENDING ON WALK, DRIVEWAY, AND UTILITY LOCATIONS. STAKE FOR APPROVAL PRIOR TO PLANTING.
13. LAYOUT OF MOWCURBS AND EDGING TO BE MARKED FOR APPROVAL PRIOR TO INSTALLATION.
14. DO NOT COMPACT BOTTOMS OF SWALES, PROTECT SWALES FROM CONSTRUCTION TRAFFIC AND DEBRIS. SEE CIVIL PLANS FOR SOILS IN SWALES.
15. ALL TREES TO BE SINGLE TRUNKED, UNLESS OTHERWISE NOTED. MULTI-TRUNKED TREES TO INCLUDE MAIN LEADER EQUAL OR GREATER TO SIZE SPECIFIED.
16. TREES OF THE SAME SPECIES SHALL BE MATCHED FROM SAME LOT AND GROWER.
17. FINISH GRADE TO BE:
    a. PLANTING AREAS: 2 1/2" BELOW ADJACENT WALKS OR HARDSCAPE ELEMENTS BEFORE INSTALLATION OF MINERAL/ORGANIC MULCH.



Michael Terrell
Landscape Architecture, PLLC
1421 N. Meadowwood Lane
Suite 150
Liberty Lake, WA
(509) 922-7449

C 2024
Michael Terrell - Landscape Architecture, PLLC
This drawing may not be reproduced in any form without written permission. All rights and title to these drawings, including but not limited to the design are retained.

LANDSCAPE ARCHITECT'S SEAL

REGISTERED LANDSCAPE ARCHITECT NO. 234
MICHAEL D. TERRELL
STATE OF IDAHO

TRAVERS PARKPLAYGROUND & SPLASH PAD CONSTRUCTION
2016 PINE ST | SANDPOINT, ID
CITY OF SANDPOINT

LANDSCAPE PLAN

REVISION	DATE
1	
2	
3	
4	

JOB NUMBER 22-100A
DATE 5/1/24
DRAWN BY SLH
CHECKED BY MDT

DRAWING 7 OF 12

L-6

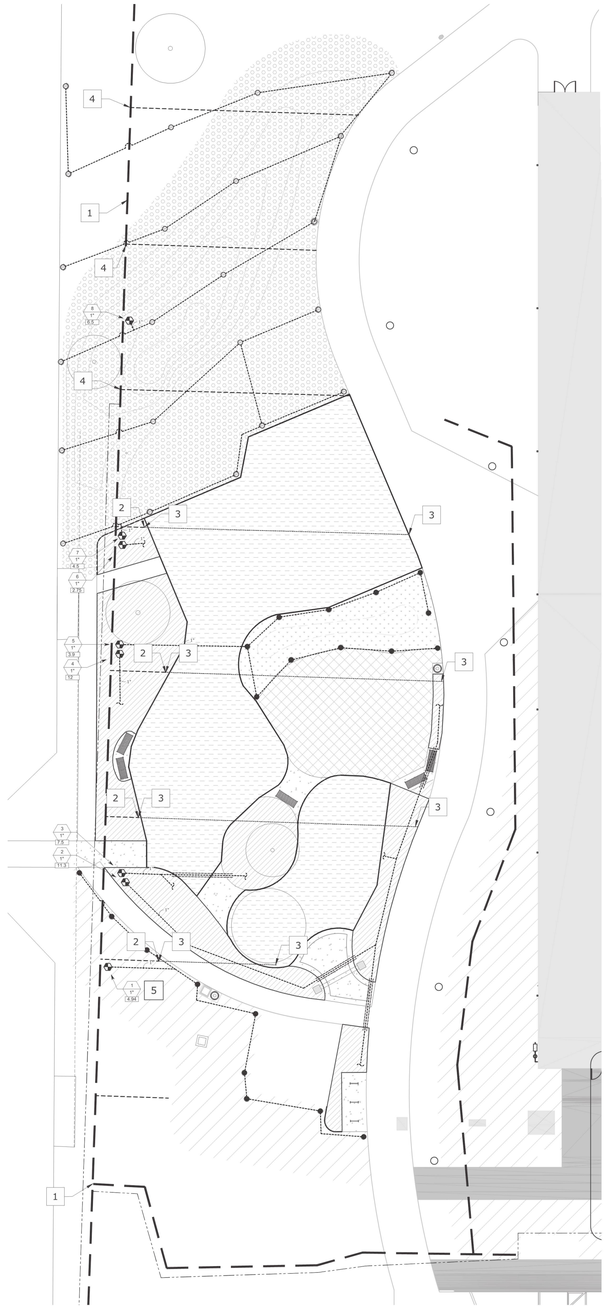

A IRRIGATION PLAN
PLAN BASE BID

GRAPHIC SCALE
20 0 10 20 40
(IN FEET)
1 inch = 20 ft.

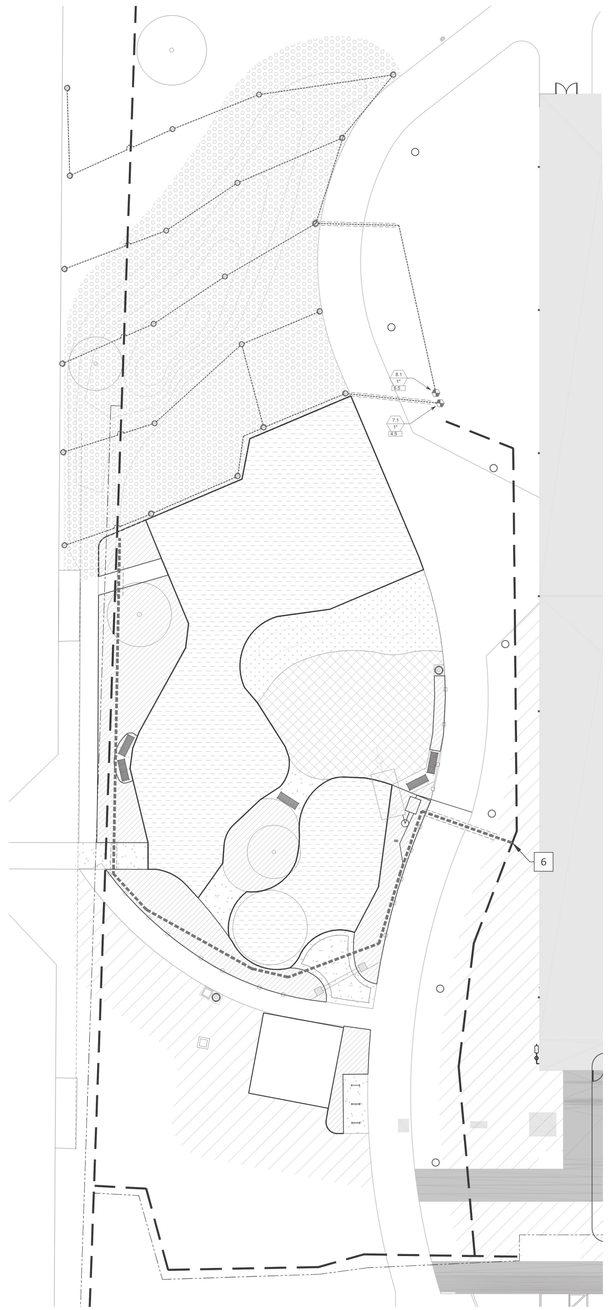

B IRRIGATION PLAN
ALT #2 SPLASH PAD

GRAPHIC SCALE
20 0 10 20 40
(IN FEET)
1 inch = 20 ft.

IRRIGATION CALLOUTS

1. EXISTING IRRIGATION MAINLINE, PRESERVE AND PROTECT. LOCATION APPROXIMATE. VERIFY IN FIELD.
2. CAP EXISTING LATERAL LINE. LOCATION APPROXIMATE. VERIFY IN FIELD. ADD ONE HALF OR ADJUSTABLE SPRAY HEAD. ADJUST HEADS TO PROVIDE HEAD TO HEAD COVERAGE.
3. EXISTING LATERAL LINE TO BE REMOVED. LOCATION APPROXIMATE. VERIFY IN FIELD.
4. CAP AND REMOVE EXISTING VALVES, TYP. LOCATION APPROXIMATE, VERIFY IN FIELD.
5. NEW IRRIGATION FOR BUILDING REPAIR. SEE BUILDING IRRIGATION PLANS, SHOWN FOR REFERENCE ONLY.
6. CONNECT NEW MAINLINE TO EXISTING BUILDING MAINLINE.

LEGEND

- ARTIFICIAL TURF SAFETY SURFACING, **BASE BID**. SEE SHEET LD-1, DETAIL C.
- SODDED TURF WITH AUTOMATIC OVERHEAD IRRIGATION, **BASE BID**.
- REPAIR AREA. SEEDED TURF WITH AUTOMATIC OVERHEAD IRRIGATION, **BASE BID**. ALTERNATE #7: INSTALL SODDED TURF GRASS. SEE SPECIFICATIONS.
- PLANTER AREA WITH MINERAL MULCH TYPE 'A' OVER WEED BARRIER FABRIC. SEE PLANTING NOTES FOR TYPE.
- SPLASH PAD. SEE SHEET L-4.
- ASPHALT PATH, **BASE BID**. ALTERNATE #8: 4" CONCRETE WITH MEDIUM BROOM FINISH. SEE SPECIFICATIONS.

IRRIGATION LEGEND

- PLANTER AREA WITH BUBBLER IRRIGATION. ONE (1) BUBBLER PER SHRUB, TWO (2) BUBBLERS PER TREE.
- EXISTING IRRIGATION MAINLINE, PRESERVE AND PROTECT. LOCATION APPROXIMATE. VERIFY IN FIELD.
- EXISTING LATERAL LINE. LOCATION APPROXIMATE. VERIFY IN FIELD.
- EXISTING LATERAL LINE TO BE REMOVED. LOCATION APPROXIMATE. VERIFY IN FIELD.
- ALTERNATE #2: NEW MAINLINE. 2" SCH 40 PVC. SEE BUILDING IRRIGATION PLANS.
- NEW LATERAL LINE - SCHEDULE 40 PVC - 1" UNLESS OTHERWISE NOTED.
- NEW PIPE SLEEVE - SCHEDULE 40 PVC. SEE SPECIFICATIONS.
- CONTROL WIRE IN CONDUIT.
- NEW IRRIGATION VALVE TO MATCH EXISTING. CONNECT TO EXISTING MAINLINE.
- HUNTER MP1000 PROS-04-PRS40-CV TURF ROTATOR, 4IN. POP-UP WITH FACTORY INSTALLED CHECK VALVE, PRESSURE REGULATED TO 40 PSI, MP ROTATOR NOZZLE ON PRS40 BODY.
- HUNTER PGP-ADJ TURF ROTOR, 4IN. POP-UP. ADJUSTABLE AND FULL CIRCLE. STANDARD ANGLE RED NOZZLE. LOWER PRECIPITATION RATE. DESIGN PRESSURE: 30 PSI

IRRIGATION NOTES

1. CONTRACTOR SHALL CALL 811 TO LOCATE ALL EXISTING ABOVE OR BELOW GRADE ON-SITE UTILITIES PRIOR TO COMMENCEMENT OF WORK, INCLUDING PLANTING. THE LOCATIONS OF UTILITIES, STRUCTURES AND SERVICES SHOWN IN THE CONTRACT DOCUMENTS SHALL BE DEEMED TO BE APPROXIMATIONS ONLY. ALL DISCREPANCIES BETWEEN WHAT IS SHOWN AND THE ACTUAL FIELD CONDITIONS SHALL BE REPORTED TO THE OWNER'S REPRESENTATIVE. PRESERVE AND PROTECT EXISTING UTILITIES TO REMAIN FROM DAMAGE OR DISRUPTION, TYPICAL. MAINTAIN LOCATES DURING CONSTRUCTION FOR REFERENCE. CONTRACTOR SHALL RECORD ALL UTILITY MARKINGS ON A SEPARATE SET OF DRAWINGS. THIS SET SHALL BE KEPT ON-SITE FOR REFERENCE FOR DURATION OF CONTRACT.
2. CONTRACTOR TO COORDINATE WITH OWNER'S MAINTENANCE PERSONNEL TO IDENTIFY AND PROTECT ANY EXISTING OWNER MAINTAINED UTILITIES, WATER LINES, IRRIGATION LINES, IRRIGATION CONTROL WIRES OR OTHER IMPROVEMENTS PRIOR TO CONSTRUCTION.
3. THE INFORMATION ON THIS SHEET IS INCOMPLETE UNLESS ACCOMPANIED BY THE CORRESPONDING SPECIFICATION SECTION(S) AND DETAILS DEVELOPED FOR THIS PROJECT. REFER TO THOSE SPECIFICATIONS AND DETAILS FOR ADDITIONAL INFORMATION.
4. CONTRACTOR IS RESPONSIBLE FOR VERIFYING CONDITIONS IN THE FIELD PRIOR TO CONSTRUCTION AND NOTIFYING THE OWNER AND OWNERS REPRESENTATIVES OF DISCREPANCIES. VERIFY THAT SUB GRADE PREPARATION HAS BEEN COMPLETED TO ACCEPTABLE TOLERANCES PRIOR TO COMMENCEMENT OF WORK. CONTRACTOR ACCEPTS SUB GRADES UPON COMMENCEMENT OF WORK AND IS RESPONSIBLE FOR ANY CORRECTIONS REQUIRED AFTER WORK BEGINS.

EXISTING SITE NOTES

1. MAINTAIN IRRIGATION TO EXISTING AND ADJACENT AREAS DURING CONSTRUCTION. NOTIFY OWNER OF ANY DISRUPTIONS LONGER THAN ONE WEEK. PROVIDE TEMPORARY IRRIGATION TO AREAS WHERE DISRUPTION OCCURS.

UNDERGROUND SERVICE ALERT
ONE-CALL NUMBER
811
CALL TWO BUSINESS DAYS BEFORE YOU DIG

Michael Terrell
Landscape Architecture, PLLC
1421 N. Meadowwood Lane
Suite 150
Liberty Lake, WA
(509) 922-7449

C 2024
Michael Terrell - Landscape Architecture, PLLC
This drawing may not be reproduced in any form without written permission. All rights and title to these drawings, including but not limited to the design are retained.

LANDSCAPE ARCHITECT'S SEAL

REGISTERED LANDSCAPE ARCHITECT NO. 234
MICHAEL D. TERRELL
STATE OF IDAHO

TRAVERS PARK PLAYGROUND & SPLASH PAD CONSTRUCTION
2016 PINE ST | SANDPOINT, ID
CITY OF SANDPOINT

IRRIGATION PLAN

REVISION	DATE
1	
2	
3	
4	

JOB NUMBER: 22-100A
DATE: 5/1/24
DRAWN BY: SLH
CHECKED BY: MDT

DRAWING 8 OF 12

L-7

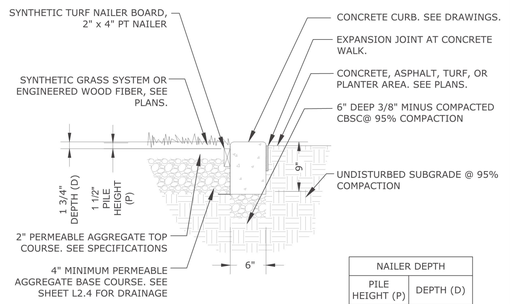

NAILER DEPTH	
PILE HEIGHT (P)	DEPTH (D)
1 1/2"	1 3/4"

NOTES:
1. SEE MANUFACTURERS SPECIFICATIONS FOR INSTALLATION.
2. SEE SPECIFICATIONS.

A PLAY AREA CURB

SCALE = NTS

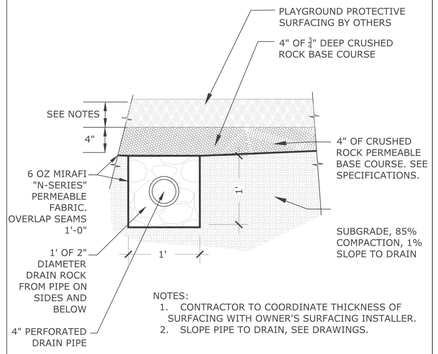

NOTES:
1. CONTRACTOR TO COORDINATE THICKNESS OF SURFACING WITH OWNER'S SURFACING INSTALLER.
2. SLOPE PIPE TO DRAIN, SEE DRAWINGS.

B PERFORATED PIPE

SCALE: NTS

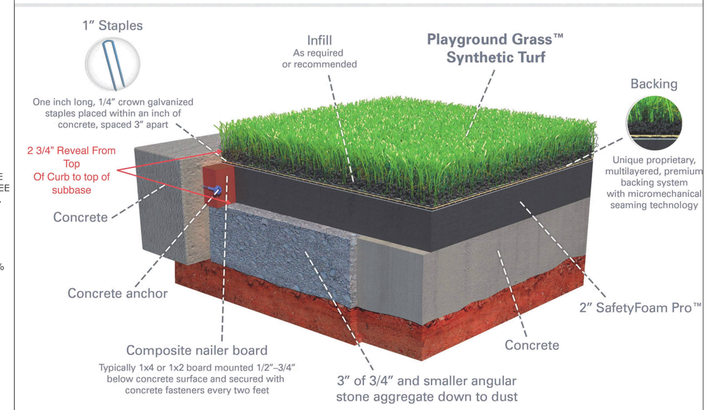

C ARTIFICIAL TURF SAFETY SURFACING

SCALE: NTS

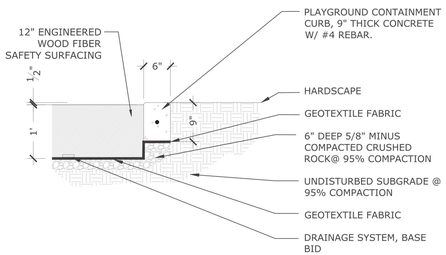

NOTES:
1. SEE MANUFACTURERS SPECIFICATIONS FOR INSTALLATION.

SCALE: NTS

D ALTERNATE #4: EWF SAFETY SURFACING

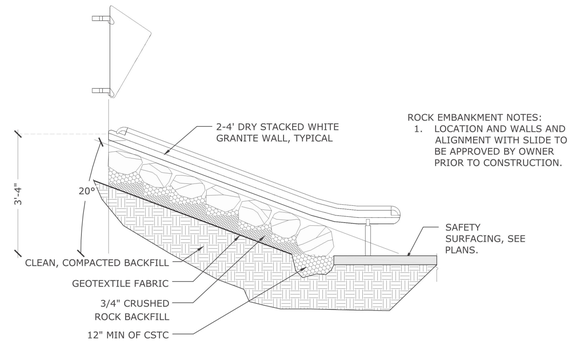

ROCK EMBANKMENT NOTES:
1. LOCATION AND WALLS AND ALIGNMENT WITH SLIDE TO BE APPROVED BY OWNER PRIOR TO CONSTRUCTION.

E ROCK EMBANKMENT WALL - ALT #4

SCALE: NTS

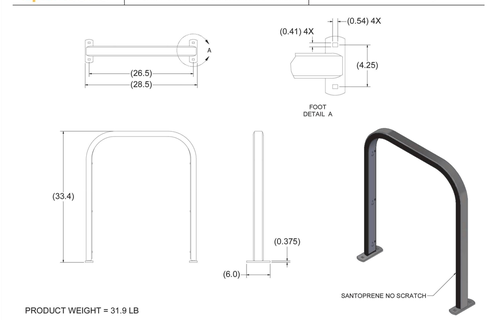

F BIKE RACKS

SCALE: NTS

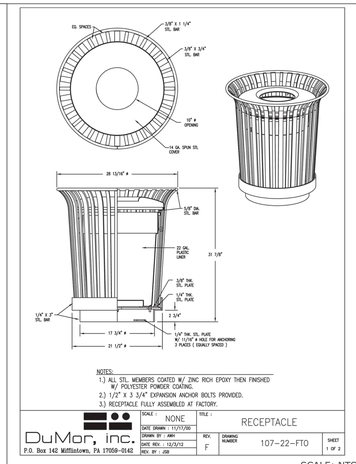

NOTES:
1.) ALL STL. MEMBERS COATED W/ ZINC RICH EPOXY THEN FINISHED W/ POLYESTER POWDER COATING.
2.) 1/2" X 3 3/4" EXPANSION ANCHOR BOLTS PROVIDED.
3.) RECEPTACLE FULLY ASSEMBLED AT FACTORY.

DuMor, inc.
P.O. Box 142 Mifflintown, PA 17059-0142

SCALE :	NONE
DATE DRAWN :	11/17/00
DRAWN BY :	AMH
DATE REV. :	12/5/13
REV. BY :	JSB
TITLE :	RECEPTACLE
REV.	F
DRAWING NUMBER	107-22-FTO
SHEET	1 OF 2

SCALE: NTS

G TRASH RECEPTACLE

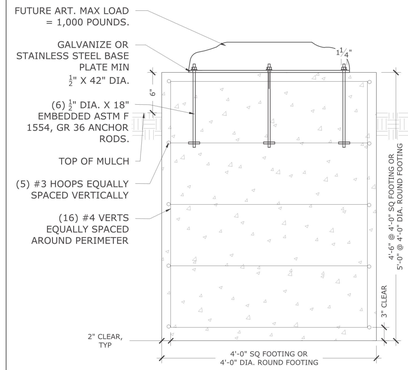

NOTES.
1. CONCRETE STRENGTH: FC=3,000 PSI
2. REBAR GRADE: FY = 60,000 PSI
3. ASSUMED ALLOWABLE LATERAL BEARING PRESSURE = 150 PCF
4. FOR REFERENCE ONLY. FINAL DESIGN DEPENDANT ON ART.

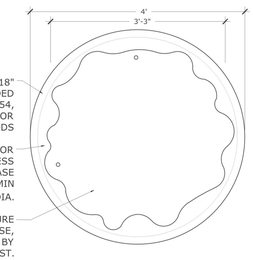

NOTES
1. BASE PLATE AND TEMPLATE TO BE PROVIDED BY SCULPTOR.
2. VERIFY DIMENSIONS OF ART BASE AND BOLT LOCATIONS

H SCULPTURE BASE

SCALE = NTS

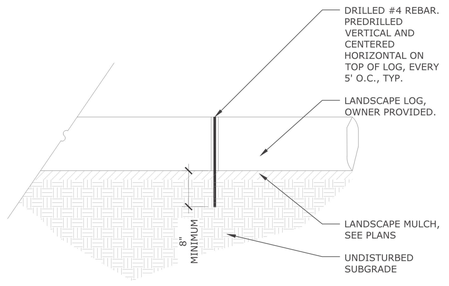

I LANDSCAPE LOGS

SCALE: NTS

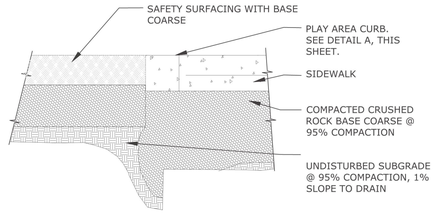

J PLAY AREA PIP - ALT #6

SCALE = NTS

Michael Terrell
Landscape Architecture, PLLC
1421 N. Meadowwood Lane
Suite 150
Liberty Lake, WA
(509) 922-7449

© 2024
Michael Terrell - Landscape Architecture, PLLC
This drawing may not be reproduced in any form without written permission. All rights and title to these drawings, including but not limited to the design are retained.

LANDSCAPE ARCHITECT'S SEAL

REGISTERED LANDSCAPE ARCHITECT NO. 234
STATE OF IDAHO

TRAVERS PARK PLAYGROUND & SPLASH PAD CONSTRUCTION
2016 PINE ST | SANDPOINT, ID
CITY OF SANDPOINT

DETAILS

REVISION	DATE
1	
2	
3	
4	

JOB NUMBER	22-100A
DATE	5/1/24
DRAWN BY	SLH
CHECKED BY	MDT

DRAWING 9 OF 12

LD-1

UNDERGROUND SERVICE ALERT
ONE-CALL NUMBER
811
CALL TWO BUSINESS DAYS BEFORE YOU DIG

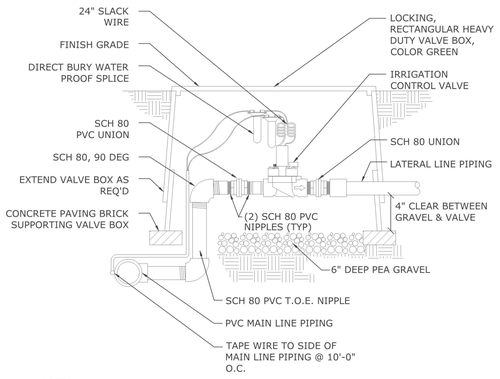

NOTES:
1. ONLY ONE AUTOMATIC VALVE PER VALVE BOX.
2. VALVE BOX TO REST ON CONCRETE PAVER BRICKS, NO PRESSURE TO BE PLACED ON MAINLINE OR LATERAL LINE.
3. PROVIDE 24" OF COILED WIRE SLACK IN VALVE BOX.
4. INSTALL LINE SURGE PROTECTION PER MANUFACTURERS SPECIFICATION.

A CONTROL VALVE INSTALLATION SCALE = NTS

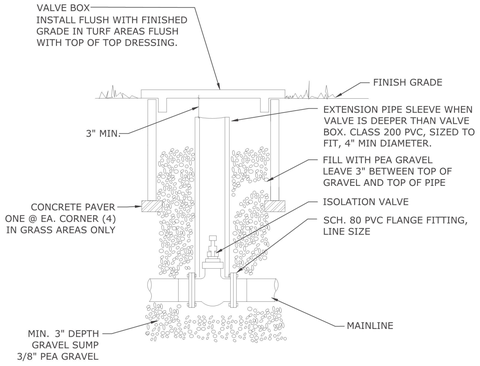

B ISOLATION VALVE - FLANGED SCALE = NTS

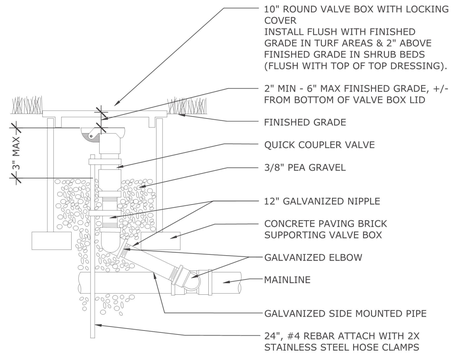

C QUICK COUPLER VALVE IN BOX SCALE = NTS

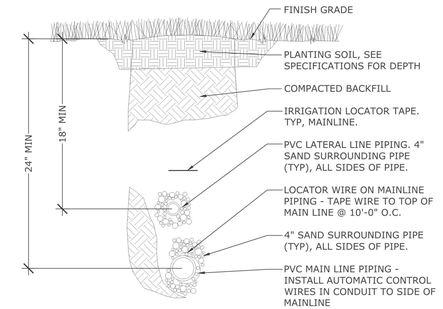

D IRRIGATION TRENCHING SCALE = NTS

NOTES:
1. THERE SHALL NOT BE 90° JOINTS DIRECTING LATERALS AND MAINLINES INTO SLEEVES. MAXIMUM ANGLE SHALL BE 45°.

E SLEEVING UNDER HARDSCAPE SCALE = NTS

F 6" CONCRETE MOW CURB SCALE = NTS

NOTES:
1. CONTRACTOR TO ADJUST SO THAT NO MORE THAN 20 BUBBLERS ARE LOCATED ON EACH SIDE OF EACH RISER.
2. SEE PLANS FOR BUBBLER NUMBER/SIZES.

G BUBBLER ON RISER SCALE = NTS

H HARDSCAPE TRANSITIONS SCALE = NTS

I TREE PROTECTION SCALE = NTS

NOTES:
1. CUT AND REMOVE WIRE BASKET AFTER TREE IS IN PLANTING HOLE. REMOVE BURLAP AND TWINE FROM TOP AND SIDES OF ROOTBALL.
2. SEE SPECIFICATIONS FOR PLANTING AND FERTILIZER REQUIREMENTS.

J PLANTING AREA TREE PLANTING SCALE = NTS

NOTES:
1. CUT AND REMOVE WIRE BASKET AFTER TREE IS IN PLANTING HOLE. REMOVE BURLAP AND TWINE FROM TOP AND SIDES OF ROOTBALL.
2. SEE SPECIFICATIONS FOR PLANTING AND FERTILIZER REQUIREMENTS.

K TREE PLANTING IN TURF GRASS SCALE = NTS

NOTES:
1. BOULDERS TO BE PROVIDED BY OWNER.
2. BOULDERS TO BE SET PRIOR TO INSTALLATION OF TOPSOIL.
3. BOULDERS TO BE GENERALLY ROUND.
3. BURY BOULDERS 1/3 TO 1/2 OF SIZE. STABILIZE BOULDERS AS NECESSARY. BOULDERS SHALL BE SOLID WITH NO MOVEMENT.

SCALE = NTS

L LANDSCAPE BOULDER PLACEMENT SCALE = NTS

Michael Terrell
Landscape Architecture, PLLC
1421 N. Meadowwood Lane
Suite 150
Liberty Lake, WA
(509) 922-7449

C 2024
Michael Terrell - Landscape Architecture, PLLC
This drawing may not be reproduced in any form without written permission. All rights and title to these drawings, including but not limited to the design are retained.

LANDSCAPE ARCHITECT'S SEAL

REGISTERED LANDSCAPE ARCHITECT NO. 234
MICHAEL D. TERRELL
STATE OF IDAHO

TRAVERS PARK PLAYGROUND & SPLASH PAD CONSTRUCTION
2016 PINE ST | SANDPOINT, ID
CITY OF SANDPOINT

DETAILS

REVISION	DATE
1	
2	
3	
4	

JOB NUMBER 22-100A
DATE 5/1/24
DRAWN BY SLH
CHECKED BY MDT

UNDERGROUND SERVICE ALERT
ONE-CALL NUMBER
811
CALL TWO BUSINESS DAYS BEFORE YOU DIG

DRAWING 10 OF 12

LD-2

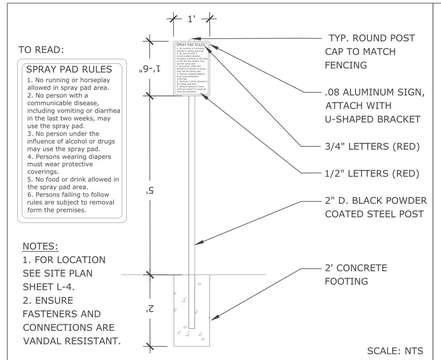

TO READ:

SPRAY PAD RULES

1. No running or horseplay allowed in spray pad area.
2. No person with a communicable disease, including vomiting or diarrhea in the last two weeks, may use the spray pad.
3. No person under the influence of alcohol or drugs may use the spray pad.
4. Persons wearing diapers must wear protective coverings.
5. No food or drink allowed in the spray pad area.
6. Persons failing to follow rules are subject to removal form the premises.

NOTES:
1. FOR LOCATION SEE SITE PLAN SHEET L-4.
2. ENSURE FASTENERS AND CONNECTIONS ARE VANDAL RESISTANT.

SCALE: NTS

A SPLASH PAD RULES SIGN, BASE BID

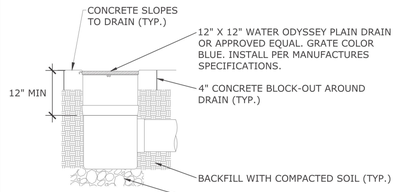

B DRAIN INLET, BASE BID

SCALE: NTS

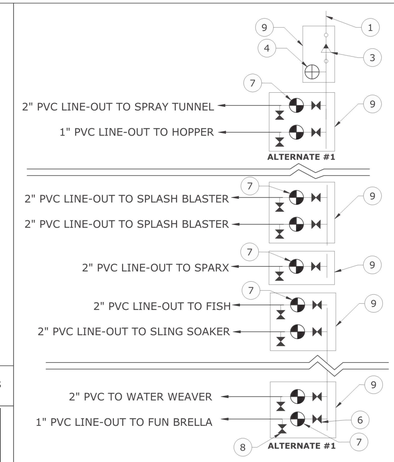

VALVE BOX CALLOUTS

1	2" SUPPLY LINE-IN FROM POTABLE WATER SOURCE. SEE SHEET L-3.
2	1" FEBCO 850 DOUBLE CHECK ASSEMBLY.
3	1" PRESSURE REGULATING VALVE. INSTALL UNION FITTINGS BEFORE AND AFTER (TYP.). 10 TO 35 PSI ADJUSTABLE.
4	1" RAINBIRD QUICK COUPLER MODEL 44RC.
5	1.5" SCH 40 PVC.
6	1" BALL VALVE (TYP.).
7	RAINBIRD 1" 100-EFB-CP-PRS-D VALVE. INSTALL UNION FITTINGS BEFORE AND AFTER (TYP.). SEE THIS SHEET, DETAIL D.
8	DRAIN VALVE 3/4" BALL VALVE (TYP).
9	HEAVY DUTY VALVE BOX WITH LOCKING LID (TYP). SIZE AS NEEDED. SUBMIT FOR APPROVAL.

NOTES:
1. ALL PIPE BETWEEN VALVES AND SPLASH PAD ELEMENTS TO BE CLASS 200 WITH SCHEDULE 40 FITTINGS

C MANIFOLD CONFIGURATION

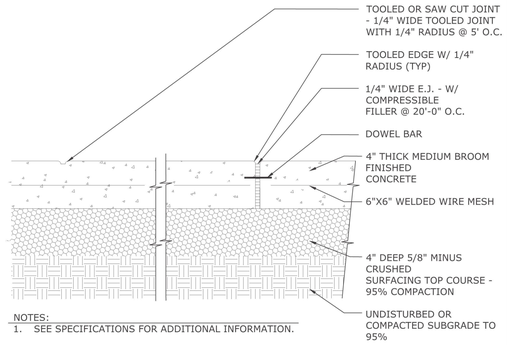

NOTES:
1. SEE SPECIFICATIONS FOR ADDITIONAL INFORMATION.

D DIVERTER STRAINER SYSTEM, BASE BID

SCALE: NTS

DIVERTER STRAINER SYSTEM 30IN ID 0010-4666

DIMENSION	VALUE (in.)
A	34
B	34
C	39
D	180°
E	135°
F	52

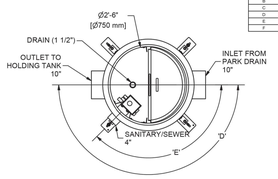

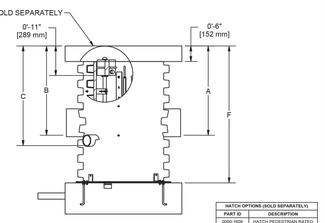

INCLUDES:
-ACTUATOR VALVE
-STRAINER BASKET
-MOUNTING FRAME

FOOTING BY OTHER, REFER TO LOCAL CODE / BASE
DE BÉTON PAR D'AUTRES, SE RÉFERER AU CODE LOCAL

HATCH OPTIONS (SOLD SEPARATELY)	
PART ID	DESCRIPTION
0000-1005	HATCH PEDESTRIAN RATED
0000-2486	HATCH H20 RATED

RECOMMENDED SPRAY AREA / ZONE D'ASPERSION POTENTIELLE			FLOW RATE / DÉBIT D'EAU		COMPONENT INCLUDES: (IF REQUIRED) / INCLUS AVEC: LE JEU (SI REQUIRE)	INITIAL:
R (ft/mm)	L (ft/mm)	W (ft/mm)	GPM/LPM	PSI/kPa	-SERVICE TOOLS / OUTILS -SPRAY NOZZLES / BUSES DE PERFORMANCE	DRAWING #: 0010-4666 SHEET: 1 OF: 1
-	-	-	-	-		
NOZZLES / BUSES			MAT'L: N/A		DIMENSIONAL ACCURACY / PRÉCISION DIMENSIONELLE +/- 1" [25mm]	

ALL PLANS AND DESIGNS AT ALL TIMES REMAIN THE PROPERTY OF THE WATERPLAY AND CANNOT BE USED OR REPRODUCED WITHOUT WRITTEN PERMISSION.

TOUS LES PLANS ET DESSINS QUE WATERPLAY peut CONSULTER, LEUR APPARTIENNENT ET NE PEUVENT ÊTRE UTILISÉS OU REPRODUITS SANS AVOIR UNE AUTORISATION ÉCRITE PRÉALABLE.

Refers to the COMPONENT WRITTEN SPECIFICATION DOCUMENT FOR COMPLETE PRODUCT SPECIFICATIONS. THIS DRAWING MAY NOT BE USED TO CHANGE THIS SPECIFICATION WITHOUT NOTICE.

SE RÉFERER AU DOCUMENT DE SPÉCIFICATION ÉCRIT POUR LES SPÉCIFICATIONS COMPLÈTES DU PRODUIT. LE DROIT DE CHANGER CES DERNIERS SANS PRÉAVIS.

WATERPLAY BY MAK
MAK CREATIVE and KELOWNA, BRITISH COLUMBIA CANADA V1Y 9X9
T: 250.712.0282
F: 250.712.0283
E: design@makplay.com
W: makplay.com

E DRAIN OUTLET, BASE BID

SCALE: NTS

DRAIN SQUARE 6IN OUTLET DRA-00007

LIST OF MATERIALS / LISTE DE MATÉRIAUX (IF / SI APPLICABLE)	
BASE MATERIAL / MATÉRIEL	POLYPROPYLENE / POLYPROPYLÈNE
GRATE / GRILLE	HDPE / PEHD

AVAILABLE VERSIONS / VERSIONS DISPONIBLES			
SKU	OUTLET / SORTIE (in.)	CAPACITY / CAPACITÉ (GPM/LPM)	GRATE COLOR / GRILLE COULEUR
DRA-00007	6	150/568	GREY

FLOW CAPACITY BASED ON 6" DRAIN PIPE AT 2% SLOPE / CAPACITÉ DU DRAIN BASE SUR UN TUYAU D'ÉCOULEMENT DE 6" SUR UNE PENTE DE 2%

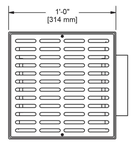

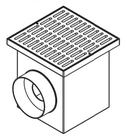

DRAIN GRATE OPENINGS / OUVERTURES DE LA GRILLE: 3/8"
TOTAL OPEN AREA OF GRATE / SURFACE OUVERTE TOTALE: 50.40 SQ IN

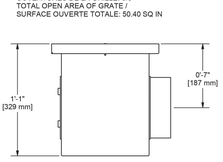

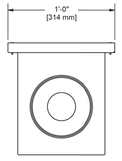

FOOTING BY OTHER, REFER TO LOCAL CODE / BASE
DE BÉTON PAR D'AUTRES, SE RÉFERER AU CODE LOCAL

RECOMMENDED SPRAY AREA / ZONE D'ASPERSION POTENTIELLE			FLOW RATE / DÉBIT D'EAU		COMPONENT INCLUDES: (IF REQUIRED) / INCLUS AVEC: LE JEU (SI REQUIRE)	INITIAL:
R (ft/mm)	L (ft/mm)	W (ft/mm)	GPM/LPM	PSI/kPa	-SERVICE TOOLS / OUTILS -SPRAY NOZZLES / BUSES DE PERFORMANCE	DRAWING #: DRA-00007 SHEET: 1 OF: 1
-	-	-	-	-		
NOZZLES / BUSES			MAT'L: 6.1 Sonass		DIMENSIONAL ACCURACY / PRÉCISION DIMENSIONELLE +/- 1" [25mm]	

ALL PLANS AND DESIGNS AT ALL TIMES REMAIN THE PROPERTY OF THE WATERPLAY AND CANNOT BE USED OR REPRODUCED WITHOUT WRITTEN PERMISSION.

TOUS LES PLANS ET DESSINS QUE WATERPLAY peut CONSULTER, LEUR APPARTIENNENT ET NE PEUVENT ÊTRE UTILISÉS OU REPRODUITS SANS AVOIR UNE AUTORISATION ÉCRITE PRÉALABLE.

Refers to the COMPONENT WRITTEN SPECIFICATION DOCUMENT FOR COMPLETE PRODUCT SPECIFICATIONS. THIS DRAWING MAY NOT BE USED TO CHANGE THIS SPECIFICATION WITHOUT NOTICE.

SE RÉFERER AU DOCUMENT DE SPÉCIFICATION ÉCRIT POUR LES SPÉCIFICATIONS COMPLÈTES DU PRODUIT. LE DROIT DE CHANGER CES DERNIERS SANS PRÉAVIS.

WATERPLAY BY MAK
MAK CREATIVE and KELOWNA, BRITISH COLUMBIA CANADA V1Y 9X9
T: 250.712.0282
F: 250.712.0283
E: design@makplay.com
W: makplay.com

F CAST-IN-PLACE CONCRETE

SCALE = NTS

Michael Terrell
Landscape Architecture, PLLC
1421 N. Meadowwood Lane
Suite 150
Liberty Lake, WA
(509) 922-7449

© 2024
Michael Terrell - Landscape Architecture, PLLC
This drawing may not be reproduced in any form without written permission. All rights and title to these drawings, including but not limited to the design are retained.

LANDSCAPE ARCHITECT'S SEAL

REGISTERED LANDSCAPE ARCHITECT NO. 234
MICHAEL D. TERRELL
STATE OF IDAHO

TRAVERS PARK PLAYGROUND & SPLASH PAD CONSTRUCTION
2016 PINE ST | SANDPOINT, ID
CITY OF SANDPOINT

SPLASH PAD DETAILS

REVISION	DATE
1	
2	
3	
4	

JOB NUMBER 22-100A
DATE 5/1/24
DRAWN BY SLH
CHECKED BY MDT

DRAWING 11 OF 12

LD-3

UNDERGROUND SERVICE ALERT
ONE-CALL NUMBER
811
CALL TWO BUSINESS DAYS BEFORE YOU DIG

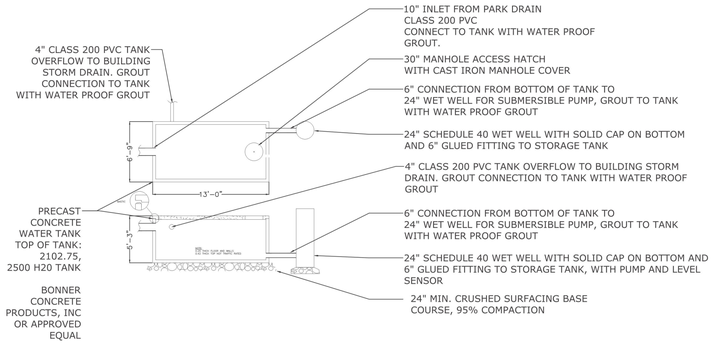

A TANK DETAIL - ALT #2

SCALE: NTS

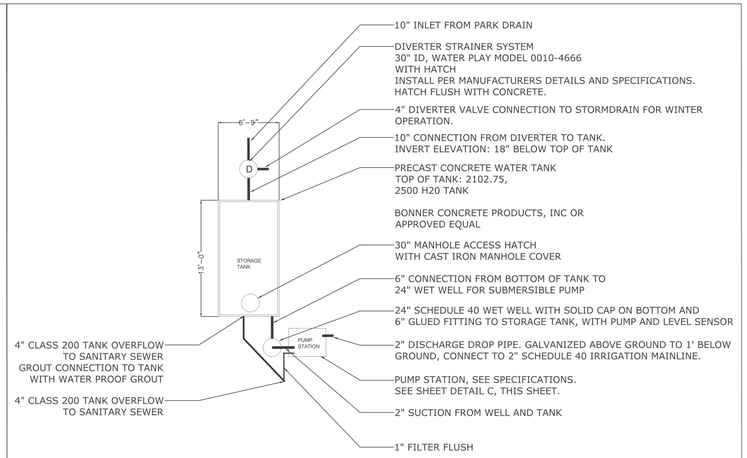

B TANK AND PUMP STATION PUMP PLAN VIEW - ALT #2

SCALE: NTS

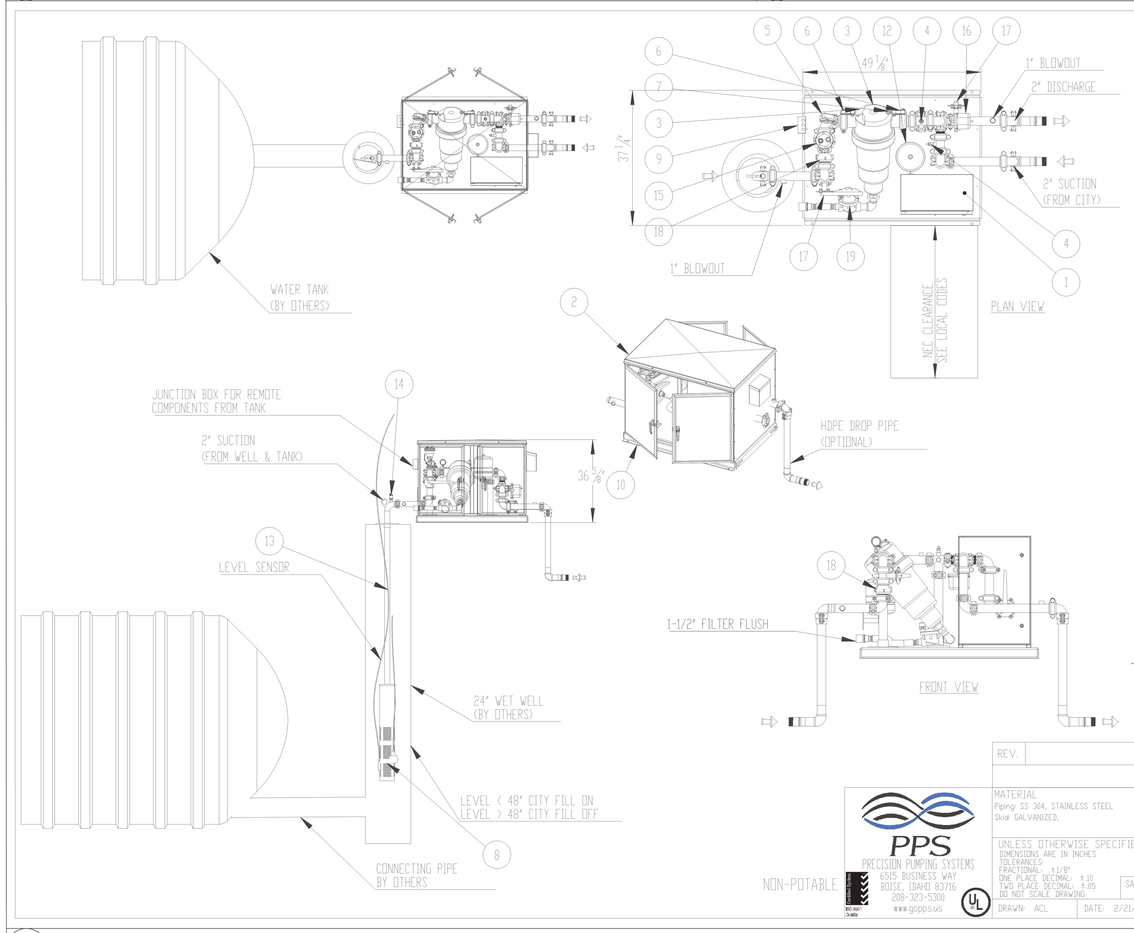

ITEM NO.	DESCRIPTION	Size	QTY.
1	CONTROL PANEL		1
2	ENCLOSURE, MARINE GRADE ALUMINUM	48"x33"x32"	1
3	FILTER, VAF200, 300 MICRON SCREEN	3"	1
4	FLOW SWITCH	1/2"	2
5	PRESSURE DIFFERENTIAL GAUGE & SWITCH	0-15 PSI	1
6	PRESSURE GAUGE, 160PSI	2-1/2"	2
7	PRESSURE TRANSDUCER, 200PSI	1/4"	1
8	PUMP, SUBMERSIBLE		1
9	JUNCTION BOX		1
10	SKID, BENT	48"X33"	1
11	SWITCH, FLOAT, 2901		2
12	TANK, PRESSURE	2 GAL	1
13	TRANSMITTER, LEVEL, GLT500		2
14	VALVE, AIR RELIEF, FV-4	1/2"	1
15	VALVE, AIR RELIEF	3/4"	1
16	VALVE, BALL, 3 WAY, H31DFXR4A	2"	1
17	VALVE, BUTTERFLY, GROOVE, LEVER	2"	2
18	VALVE, CHECK, GROOVED	2"	1
19	VALVE, SOLENOID (LAKE SCREEN SUPPLY)	1-1/2"	1

REV.	DESCRIPTION	DATE	APV'D
REVISIONS			

PPS
PRECISION PUMPING SYSTEMS
6515 BUSINESS WAY
BOISE, IDAHO 83716
208-323-5300
www.gopps.us

NON-POTABLE

MATERIAL: Piping: SS 304, STAINLESS STEEL Skid: GALVANIZED,
UNLESS OTHERWISE SPECIFIED: DIMENSIONS ARE IN INCHES TOLERANCES: FRACTIONAL: ±1/8" ONE PLACE DECIMAL: ±.10 TWO PLACE DECIMAL: ±.05 DO NOT SCALE DRAWING
SALESMAN:
DRAWN: ACL | DATE: 2/21/2024

TITLE: WATER HARVESTING PUMP STATION
PROJECT: VIRGO
LEVEL: 90% Build
PART NO: IS-2-NJ-NF-FS-NI-NP
JOB: | SIZE: B | SCALE: NTS | SHEET: 1 OF 1 | REV: DEFAULT

C IRRIGATION BOOSTER STATION - ALT #2

SCALE: NTS

Michael Terrell
Landscape Architecture, PLLC
1421 N. Meadowwood Lane
Suite 150
Liberty Lake, WA
(509) 922-7449

C 2024
Michael Terrell - Landscape Architecture, PLLC
This drawing may not be reproduced in any form without written permission. All rights and title to these drawings, including but not limited to the design are retained.

LANDSCAPE ARCHITECT'S SEAL

REGISTERED LANDSCAPE ARCHITECT NO. 234
MICHAEL D. TERRELL
STATE OF IDAHO

TRAVERS PARK PLAYGROUND & SPLASH PAD CONSTRUCTION
2016 PINE ST | SANDPOINT, ID
CITY OF SANDPOINT

ALTERNATE DETAILS

REVISION	DATE
1	
2	
3	
4	

JOB NUMBER: 22-100A
DATE: 5/1/24
DRAWN BY: SLH
CHECKED BY: MDT

UNDERGROUND SERVICE ALERT
ONE-CALL NUMBER
811
CALL TWO BUSINESS DAYS BEFORE YOU DIG

DRAWING 12 OF 12

LD-4

SANITARY SEWER NOTES:

1. GRAVITY SANITARY SEWER SERVICES SHALL BE PVC, ASTM D3034, SDR35 WITH FLEXIBLE GASKETED JOINTS.
2. NON–POTABLE MAINS ARE PROHIBITED FROM BEING LOCATED IN THE SAME TRENCH AS POTABLE MAINS.
3. ALL SURFACE FEATURES OF THE WATER, SEWER AND STORM SYSTEMS (VALVE LIDS, MANHOLE LIDS, VAULTS, ETC.) TO BE CLEARLY MARKED "WATER", "SEWER" OR "STORM".
4. ALL VALVES, VAULTS, MANHOLES, METER BOXES, ETC. WHICH ARE LOCATED WITHIN PAVED AREAS SHALL BE CAPABLE OF HS–20 VEHICLE LOADING.
5. ALL SEWER MAINS SHALL BE FIELD STAKED FOR GRADES AND ALIGNMENT BY A LICENSED ENGINEERING OR SURVEYING FIRM QUALIFIED TO PERFORM SUCH WORK.
6. THE CONTRACTOR MUST SECURE APPROVAL FROM THE UTILITY PURVEYOR'S ENGINEERING INSPECTOR PRIOR TO BACKFILL OVER SEWER TEES AND LATERALS.
7. ALL SEWER MAINS AND SEWER LATERALS SHALL BE PLACED, INSPECTED, TESTED AND APPROVED BY THE UTILITY PURVEYOR PRIOR TO PAVING.
8. THE CONTRACTOR SHALL BE RESPONSIBLE FOR CLEANUP OF ANY DEBRIS WITHIN NEWLY CONSTRUCTED PIPES, OR THEIR CONNECTIONS TO EXISTING SYSTEMS. ALL LINES AND MANHOLES SHALL BE CLEANED AND INSPECTED PRIOR TO PAVING. HYDRANT FLUSHING OF SEWERS IS NOT AN ACCEPTABLE MEANS OF CLEANING.
9. GRAVITY SEWER SERVICE LATERALS SHALL HAVE 2.0% MINIMUM SLOPE AND 3.5' MINIMUM COVER AT THE LATERAL END.
10. ALL SEWER MAINS AND SERVICE LINES SHALL BE LOCATED TO MEET STATE SEPARATION REQUIREMENTS.

WATER SYSTEM NOTES:

1. ALL WORK MUST MEET THE STANDARDS OF THE CURRENT EDITION OF THE ISPWC.
2. ALL FITTINGS 2" AND SMALLER WILL BE BRASS. THE USE OF GALVANIZED FITTINGS IS STRICTLY PROHIBITED.
3. NO CONNECTIONS FOR THE PURPOSE OF OBTAINING WATER SUPPLY DURING CONSTRUCTION SHALL BE MADE WITHOUT FIRST OBTAINING APPROVAL FROM THE PUBLIC WORKS DEPARTMENT.
4. ALL FITTINGS OR APPURTENANCES REMOVED FROM THE PUBLIC WORKS DEPARTMENT WATER LINES SHALL BE RETURNED BY THE CONTRACTOR TO THE PUBLIC WORKS DEPARTMENT UNLESS OTHERWISE SPECIFIED BY THE CONTRACT DOCUMENTS.
5. ALL WATER MAINS AND SERVICES SHALL BE INSTALLED WITH CONTINUOUS TRACER WIRE AND PLASTIC MARKER TAPE. TRACER WIRE SHALL BE TESTED PRIOR TO SUB–GRADE APPROVAL.
6. NON–POTABLE MAINS ARE PROHIBITED FROM BEING LOCATED IN THE SAME TRENCH AS POTABLE MAINS.
7. CONTRACTOR SHALL BE RESPONSIBLE FOR ALL WATER MAIN PRESSURE TESTING, FLUSHING AND DISINFECTING IN ACCORDANCE WITH THE PROVISIONS OF THE ISPWC AND UTILITY PURVEYOR.
8. ALL WATER MAIN VALVES AND VALVE BOXES, FIRE HYDRANTS, SERVICES, AND APPURTENANCES SHALL BE INSTALLED, TESTED AND APPROVED PRIOR TO PAVING.
9. ALL SURFACE FEATURES OF THE WATER AND SEWER SYSTEMS (VALVE LIDS, MANHOLE LIDS, VAULTS, ETC.) TO BE CLEARLY MARKED "WATER", "SEWER" OR "STORM".
10. ALL VALVES, VAULTS, MANHOLES, METER BOXES, ETC. WHICH ARE LOCATED WITHIN PAVED AREAS SHALL BE CAPABLE OF HS–20 VEHICLE LOADING.
11. LAY PIPE AT UNIFORM GRADE TO AVOID HIGH/LOW POINTS.
10. ALL SEWER MAINS AND SERVICE LINES SHALL BE LOCATED TO MEET STATE SEPARATION REQUIREMENTS.
11. WATER LINES CROSSING SEWER LINES SHALL BE LAID TO PROVIDE A MINIMUM VERTICAL DISTANCE OF 18 INCHES BETWEEN THE OUTSIDE OF THE SEWER AND THE BOTTOM OF THE SEWER WITH THE SEWER LINE BELOW THE WATER LINE. IF THIS CANNOT BE ACHIEVED, THE SEWER LINE MUST BE ENCASED 10 FEET ON EITHER SIDE OF CROSSING WITH A CONTINUOUS 20 FOOT LENGTH OF C900 PVC PIPE.

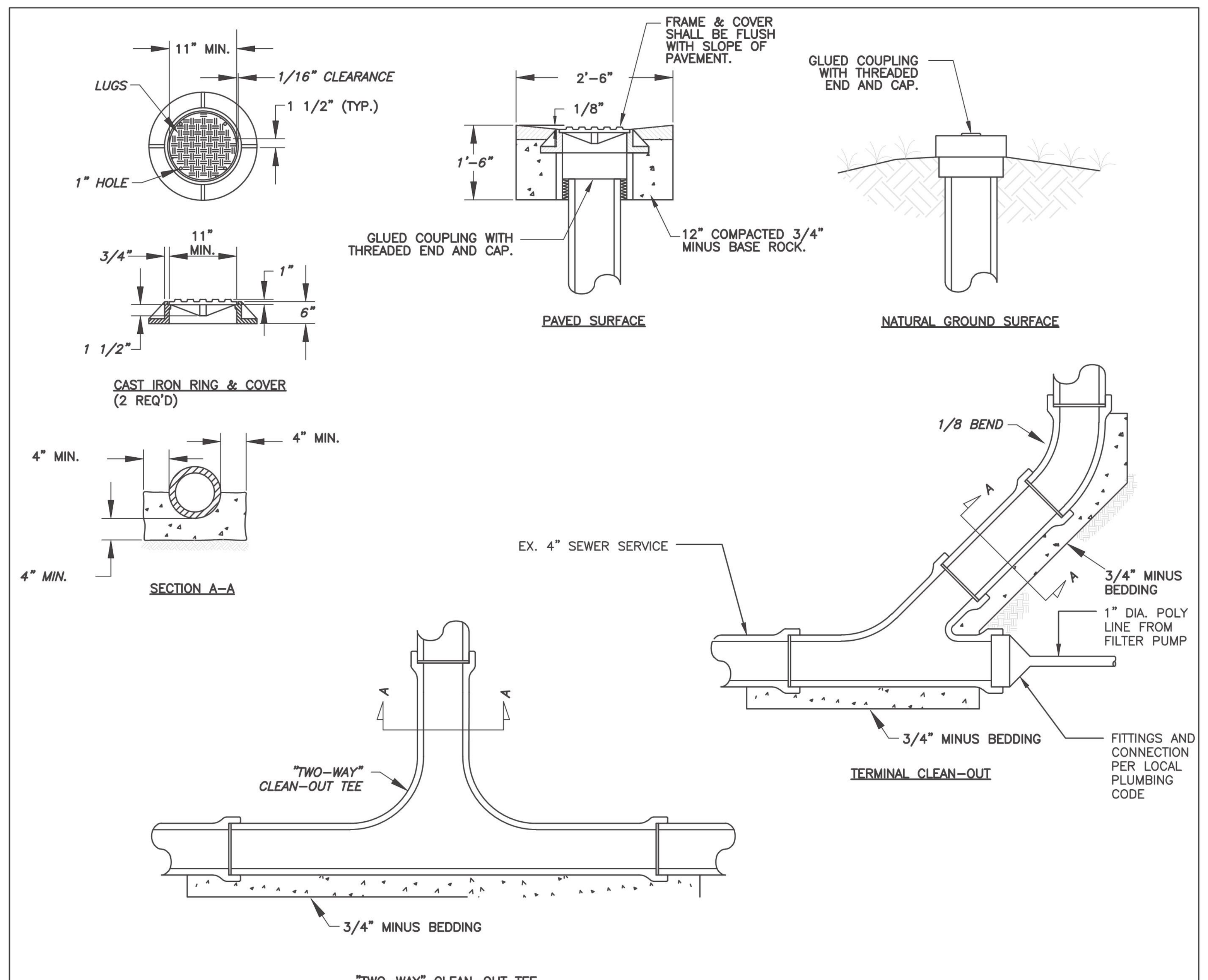

GRAVITY SEWER CLEAN–OUT

N.T.S.

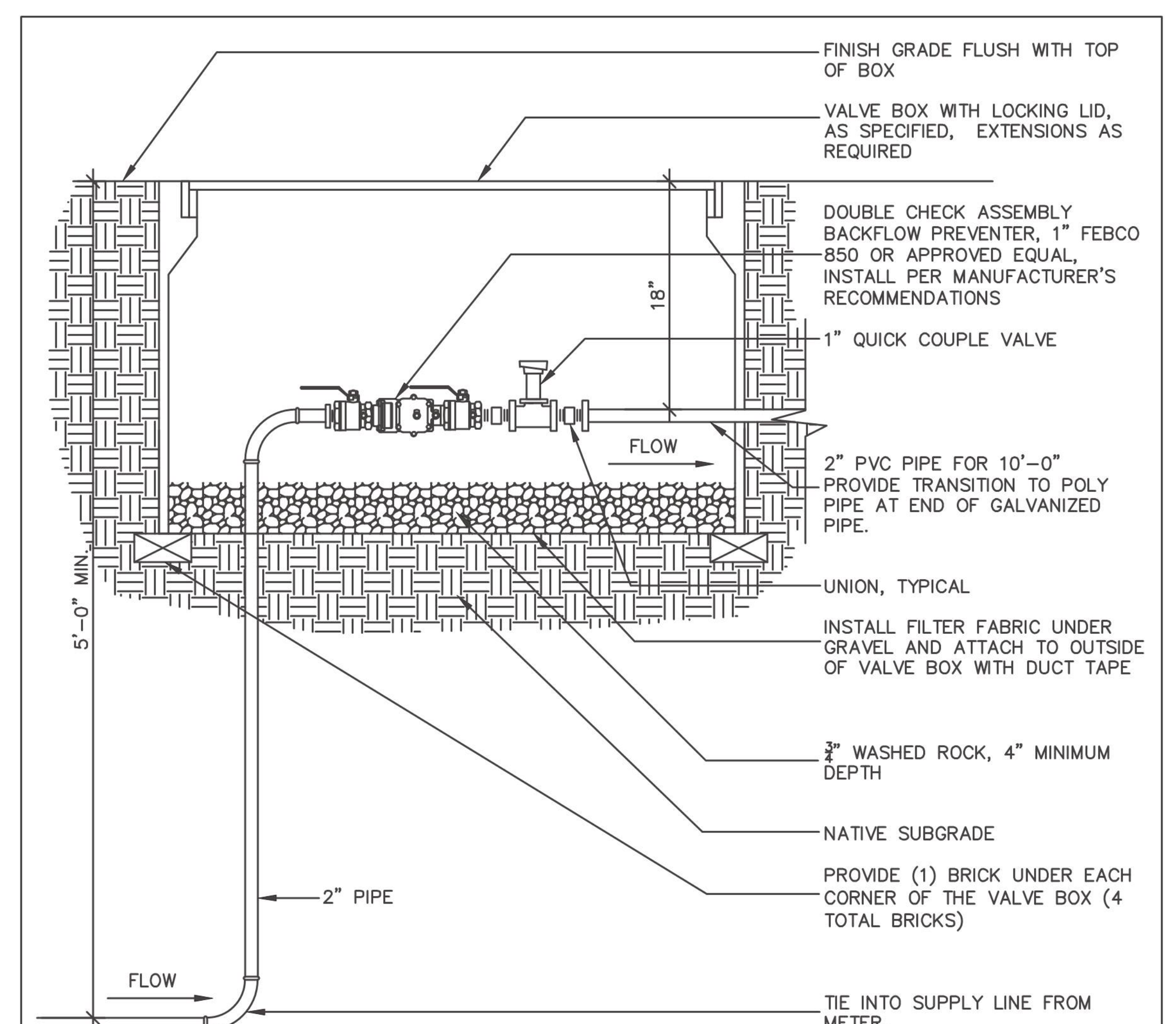

NOTES:
1. INSTALL PER LOCAL MUNICIPALITY REQUIREMENTS. PROVIDE INITIAL TESTING.
2. INSTALL DOUBLE CHECK ASSEMBLY/BACKFLOW PREVENTOR USING UNION FITTINGS.
3. INSTALL PER MANUFACTURER'S RECOMMENDATIONS.
4. PROVIDE SUPPORT PER MANUFACTURERS RECOMMENDATIONS.
5. BACKFLOW PREVENTOR TO BE TESTED & APPROVED PRIOR TO SYSTEM ACCEPTANCE.

DOUBLE CHECK VALVE ASSEMBLY BACKFLOW DETAIL

N.T.S.

GENERAL NOTES:

1. ALL WORK SHALL CONFORM TO THE MOST CURRENT EDITION OF THE IDAHO STANDARDS FOR PUBLIC WORKS CONSTRUCTION (ISPWC) AND AS AMENDED, SUPPLEMENTED OR MODIFIED THEREIN.
2. NO GUARANTEE IS MADE OR IMPLIED THAT ALL EXISTING UTILITIES ARE SHOWN. THE CONTRACTOR SHALL BE RESPONSIBLE FOR FIELD VERIFICATION AND LOCATION OF ALL UTILITIES AND UNDERGROUND PIPING. THE CONTRACTOR SHALL CALL THE UTILITY ONE CALL (811) AT LEAST 48 HOURS PRIOR TO COMMENCING WORK. THE CONTRACTOR SHALL PROTECT ALL EXISTING UTILITIES AND STRUCTURES.
3. THE CONTRACTOR SHALL NOTIFY THE APPROPRIATE UTILITY COMPANIES PRIOR TO STARTING WORK NEAR ANY FACILITIES AND SHALL COORDINATE THEIR WORK WITH COMPANY REPRESENTATIVES.
4. IN THE EVENT THAT ANY UNFORESEEN CONDITIONS NOT COVERED BY THESE CONSTRUCTION DOCUMENTS ARE ENCOUNTERED DURING CONSTRUCTION, THE CONTRACTOR SHALL IMMEDIATELY NOTIFY THE CITY.
5. THE CONTRACTOR SHALL HAVE AN APPROVED SET OF CONSTRUCTION PLANS ON SITE AT ALL TIMES DURING CONSTRUCTION. NO REVISIONS SHALL BE MADE TO THE PLANS WITHOUT THE APPROVAL OF THE CITY. AS–BUILTS SHALL BE SUBMITTED TO THE CITY AT THE COMPLETION OF THE PROJECT.
6. IT IS THE CONTRACTOR'S RESPONSIBILITY TO COMPLY WITH OSHA SAFETY STANDARDS AND REQUIREMENTS.
7. EXISTING PROPERTY CORNERS OR SURVEY MONUMENTS SHALL BE PROTECTED DURING THE COURSE OF CONSTRUCTION. ANY DAMAGED OR OBLITERATED CORNERS OR MONUMENTS SHALL BE RE–ESTABLISHED AT THE CONTRACTORS EXPENSE BY A PROFESSIONAL LAND SURVEYOR, LICENSED IN THE STATE OF IDAHO, PRIOR TO FINAL ACCEPTANCE.
8. THE CONTRACTOR SHALL MAINTAIN THE STREETS, SIDEWALKS, AND ALL OTHER PUBLIC AND PRIVATE PROPERTY IN A CLEAN, SAFE AND USABLE CONDITION. ALL SOIL, ROCK, OR CONSTRUCTION DEBRIS SHALL BE PROMPTLY REMOVED DURING CONSTRUCTION AND UPON COMPLETION OF THE PROJECT. THE CONTRACTOR SHALL BE RESPONSIBLE FOR RETURNING ALL DISTURBED AREAS TO PRE–CONSTRUCTION CONDITIONS OR BETTER.
9. ALL UNDERGROUND UTILITIES AND CONDUITS SHALL BE INSTALLED BEFORE CONSTRUCTION OF CURBS, SIDEWALKS OR SURFACING OF STREETS.
10. LANDSCAPE SLEEVING: EARTHWORK CONTRACTOR SHALL PROVIDE SLEEVING AS REQUIRED UNDER SIDEWALKS, PATHS, CURBING, PAVING, AND OTHER HARD SURFACES AS NEEDED FOR IRRIGATION ACCESS. ALL SLEEVING SHALL BE 4" PVC WITH AT LEAST 12" OF COVER BELOW FINISHED GRADE. THE CONTRACTOR SHALL INSTALL SLEEVING BEFORE SIDEWALKS ARE INSTALLED.
11. CONTRACTOR SHALL RETAIN AND PROTECT ALL EXISTING IRRIGATION SYSTEMS TO THE GREATEST EXTENT POSSIBLE AND REPLACE DAMAGED PORTIONS AT IRRIGATION SYSTEMS WHETHER DAMAGE OCCURS DURING CONSTRUCTION OR NOT.
12. DRY UTILITY CONDUIT: CIVIL CONTRACTOR IS RESPONSIBLE FOR COORDINATING ALL ELECTRICAL AND DRY UTILITY CONDUIT NEEDS WITH THE CITY OF SANDPOINT.
13. THE CONTRACTOR SHALL BE RESPONSIBLE FOR ALL TRAFFIC CONTROL, IN ACCORDANCE WITH THE M.U.T.C.D. CURRENT EDITION. TRAFFIC CONTROL PLANS SHALL BE PREPARED BY THE CONTRACTOR AND SUBMITTED TO THE CITY OF SANDPOINT FOR APPROVAL. NO WORK SHALL TAKE PLACE UNTIL ALL APPROVED TRAFFIC CONTROL IS IN PLACE.
14. TOPOGRAPHICAL DATA PROVIDED BY OTHERS. CONTRACTOR IS RESPONSIBLE FOR FIELD VERIFICATION PRIOR TO BID. VAN HOUTEN CONSULTING & DESIGN TAKES NO RESPONSIBILITY FOR TOPOGRAPHICAL MISHAPS OR UNFORESEEN SUBSURFACE CONDITIONS.
15. THE PLANS ARE SCHEMATIC AND ARE NOT INTENDED TO DEPICT ALL DETAILS OF THE WORK REQUIRED. THE CONTRACTOR SHALL BE RESPONSIBLE TO FAMILIARIZE THEMSELVES WITH ACTUAL SITE CONDITIONS, REQUIREMENTS, AND FACTORS AFFECTING THE WORK. WHERE LACK OF DETAIL OR CONFLICT EXISTS BETWEEN THESE AND OTHER PLANS, THE CONTRACTOR SHALL NOTIFY THE OWNER TO RESOLVE THE ISSUE PRIOR TO PROCEEDING. IF THE CONTRACTOR DISCOVERS ANY DISCREPANCIES BETWEEN THE PLANS AND EXISTING CONDITIONS ENCOUNTERED, THE CONTRACTOR SHALL NOTIFY THE DESIGN ENGINEER AND THE CITY OF SANDPOINT PUBLIC WORKS DEPARTMENT.
16. THE CONTRACTOR SHALL PROVIDE THE DESIGN ENGINEERS WITH AS–BUILT DRAWINGS PRIOR TO FINAL APPROVAL. ALL DEVIATIONS FROM THE ORIGINAL PLANS MADE DURING THE COURSE OF CONSTRUCTION, INCLUDING LOCATION, INVERTS, AND DEPTHS OF UTILITIES, SHALL BE CLEARLY MARKED ON THE AS–BUILT DRAWINGS. THE ENGINEER SHALL PROVIDE THE CITY ENGINEER WITH "RECORD DRAWINGS" AS REQUIRED.

STORMWATER & EROSION CONTROL NOTES:

1. ALL STORMWATER BMPS SHALL CONFORM TO IDAHO DEPARTMENT OF ENVIRONMENTAL QUALITY (IDEQ) STORM WATER BEST MANAGEMENT PRACTICES CATALOG.
2. IN AREAS OUTSIDE THE LIMITS OF DISTURBANCE, RETAIN THE DUFF LAYER, NATIVE TOPSOIL, AND EXISTING VEGETATION IN AN UNDISTURBED STATE TO THE MAXIMUM EXTENT PRACTICAL.
3. INSPECT ALL ROADWAYS, AT THE END OF EACH DAY, ADJACENT TO THE CONSTRUCTION ACCESS ROUTE. IF IT IS EVIDENT THAT SEDIMENT HAS BEEN TRACKED OFF SITE AND/OR BEYOND THE ROADWAY APPROACH, CLEANING IS REQUIRED.
4. INSPECT SEDIMENT CONTROL BMPS WEEKLY AT A MINIMUM, DAILY DURING A STORM EVENT, AND AFTER ANY DISCHARGE FROM THE SITE (STORMWATER OR NON–STORMWATER). THE INSPECTION FREQUENCY MAY BE REDUCED TO ONCE A MONTH IF THE SITE IS STABILIZED AND INACTIVE.
5. CONTROL FUGITIVE DUST FROM CONSTRUCTION ACTIVITY IN ACCORDANCE WITH STATE AND/OR LOCAL AIR QUALITY CONTROL AUTHORITIES WITH JURISDICTION OVER THE PROJECT AREA.
6. PROTECT INLETS, DRYWELLS, CATCH BASINS, CULVERTS AND OTHER STORMWATER MANAGEMENT FACILITIES FROM SEDIMENT, WHETHER OR NOT FACILITIES ARE OPERABLE.
7. COORDINATE ANY STOCKPILING OF MATERIALS WITH THE CITY OF SANDPOINT PRIOR TO CONSTRUCTION.
8. NO AREAS DISTURBED BY CONSTRUCTION SHALL BE LEFT BARE. ALL PERVIOUS DISTURBED AREAS NOT OTHERWISE COVERED WITH ROCK, MULCH OR LANDSCAPING SHALL BE SEEDED.
9. AREAS RECEIVING SEED SHALL HAVE SOIL SUITABLE FOR VEGETATION GROWTH. IF THE FINISHED SURFACE CANNOT SUPPORT PLANT LIFE, TOPSOIL SHALL BE IMPORTED AND PLACED TO A SUFFICIENT DEPTH FOR PERMANENT REVEGETATION. SHOULD HYDROSEED FAIL TO TAKE ROOT DUE TO INSUFFICIENT SOIL PROFILE, CONTRACTOR SHALL RECTIFY THE PROBLEM BY PERMANENTLY ESTABLISHING VEGETATION AT THEIR OWN EXPENSE.
10. CONSTRUCTION SHALL BE CONSIDERED COMPLETE WHEN PERMANENT ESC CONTROLS, WHEN APPLICABLE, HAVE BEEN COMPLETELY INSTALLED; ALL LAND–DISTURBING ACTIVITIES THAT HAVE THE POTENTIAL TO CAUSE EROSION OR SEDIMENTATION PROBLEMS HAVE CEASED; AND, VEGETATION HAS BEEN ESTABLISHED IN THE AREAS NOTED AS REQUIRING VEGETATION ON THE ACCEPTED PLAN ON FILE WITH THE LOCAL JURISDICTION.
11. REMOVE TEMPORARY ESC BMPS WITHIN THIRTY DAYS AFTER THE TEMPORARY BMPS ARE NO LONGER NEEDED. PERMANENTLY STABILIZE AREAS THAT ARE DISTURBED DURING THE REMOVAL PROCESS.

GEOTECHNICAL NOTES:

1. CONTRACTOR SHALL FOLLOW THE RECOMMENDATIONS MADE IN THE GEOTECHNICAL REPORT PREPARED BY ALLWEST ON SEPTEMBER 8TH, 2022. THE RECOMMENDATIONS OF THE GEOTECHNICAL REPORT SHALL TAKE PRECEDENCE SHOULD ANY DISCREPANCIES EXIST BETWEEN IT AND THESE PLANS.
2. UNCONTROLLED FILL CONSISTING OF WOOD DEBRIS WAS ENCOUNTERED FROM 5 TO 10 FEET BELOW GROUND SURFACE DURING EXPLORATIONS.
3. GROUNDWATER WAS ENCOUNTERED 7 TO 8 FEET BELOW GROUND SURFACE DURING EXPLORATIONS. CONDITIONS MAY DIFFER DURING CONSTRUCTION. THE CONTRACTOR SHALL CONSULT WITH THE CITY AND LICENSED GEOTECHNICAL ENGINEER IF GROUNDWATER IS ENCOUNTERED.
4. CONTRACTOR SHALL OVER EXCAVATE ALL UNDOCUMENTED AND UNCONTROLLED FILL PRIOR TO COMPACTING SUBGRADE.
5. OVER EXCAVATION AND FINAL SUBGRADE PREPARATION SHALL BE EVALUATED BY A LICENSED PROFESSIONAL GEOTECHNICAL ENGINEER. THE GEOTECHNICAL ENGINEER MUST BE PRESENT DURING EXCAVATION TO DETERMINE SUITABILITY OF UNCONTROLLED FILL AND LIMITS OF REMOVAL AND REPROCESSING.
6. THE SUBGRADE SHOULD BE MOISTURE CONDITIONED TO WITHIN TWO PERCENTAGE POINTS OF THE OPTIMUM MOISTURE CONTENT FOR COMPACTION. THE SUBGRADE SHOULD THEN BE COMPACTED TO A FIRM AND UNYIELDING CONDITION.
7. ON–SITE SOILS ARE UNSUITABLE FOR USE AS STRUCTURAL FILL. SELECT STRUCTURAL FILL WILL NEED TO BE IMPORTED TO THE SITE. IMPORT MATERIALS SHALL BE APPROVED BY A LICENSED GEOTECHNICAL ENGINEER, PRIOR TO DELIVERY TO THE SITE. SEE ALLWEST REPORT, TABLE 1, FOR STRUCTURAL FILL CRITERIA.

GRADING & PAVING NOTES:

1. ASPHALT PAVEMENT SURFACE COURSE SHALL CONFORM TO ISPWC REQUIREMENTS OR BETTER.
2. CONCRETE PAVEMENT SHALL COMPLY WITH ISPWC AND ACI 301 REQUIREMENTS FOR MEASURING, MIXING, TRANSPORTING AND PLACING CEMENT CONCRETE PAVEMENT.
3. SUBMIT PAVEMENT MIX DESIGN, SUBBASE AND AGGREGATE BASE COURSE INFORMATION FOR ENGINEER APPROVAL PRIOR TO ORDERING THESE MATERIALS.
4. CONTRACTOR SHALL CHECK EXPOSED SUBGRADES AND BASE SURFACES FOR COMPLIANCE WITH REQUIREMENTS FOR DIMENSIONAL, GRADING, AND ELEVATION TOLERANCES; PREVENT SURFACE WATER AND GROUNDWATER FROM ENTERING EXCAVATIONS, FROM PONDING ON PREPARED SUBGRADES AND BASE SURFACES AND FROM FLOODING PROJECT SITE OR SURROUNDING AREA; AND SHALL PROTECT SUBGRADES AND BASE SURFACES FROM SOFTENING, UNDERMINING, WASHOUT, DAMAGE BY RAIN OR WATER ACCUMULATION AND AGAINST FREEZING TEMPERATURES AND FROST.
5. STRUCTURAL FILL SHOULD BE PLACED IN SIX–INCH–THICK LOOSE LIFTS AT NEAR OPTIMUM MOISTURE CONTENT AND COMPACTED TO AT LEAST 95% OF THE MAXIMUM DRY DENSITY AS DETERMINED BY ASTM D–1557 (MODIFIED PROCTOR). STRUCTURAL FILL SHALL BE FREE OF ORGANIC MATTER, FROZEN SOIL AND DELETERIOUS DEBRIS.
6. BALLAST AND BASE COURSE MATERIAL SHALL MEET THE CRITERIA SET FORTH IN THE REQUIREMENTS OF ISPWC.
7. THE UPPER 12" OF SUBGRADE, BALLAST AND BASE COURSE SHALL BE COMPACTED TO AT LEAST 95% OF THE MAXIMUM DRY DENSITY AS DETERMINED BY ASTM D–1557 (MODIFIED PROCTOR). ASPHALT PAVEMENT SHALL BE COMPACTED TO A MINIMUM OF 92% OF RICE'S THEORETICAL DENSITY.
8. PAVING SHALL NOT OCCUR UNTIL ALL UNDERLYING UTILITIES HAVE BEEN TESTED AND APPROVED.
9. A REPRESENTATIVE OF THE ENGINEER–OF–RECORD SHALL CONDUCT COMPACTION TESTING AFTER CONSTRUCTION OF EACH COURSE OF MATERIAL IS COMPLETED.
10. THE CONTRACTOR SHALL GIVE THE ENGINEER WRITTEN 48 HOUR NOTIFICATION PRIOR TO ALL REQUIRED CONSTRUCTION STAKING, OBSERVATION AND TESTING.
11. STRIP ALL TOPSOIL AND UNDOCUMENTED/UNCONTROLLED FILL PRIOR TO COMPACTING SUBGRADE. SUBGRADE SHALL BE FREE OF ORGANIC MATTER, FROZEN SOIL AND DELETERIOUS DEBRIS.
12. ALL FINISHED GRADING ELEVATIONS SHALL MATCH EXISTING ELEVATIONS AT THE SITES BOUNDARY, EXCEPT AS SHOWN OTHERWISE ON THE GRADING PLAN. WHERE CONFLICTS EXIST, THE CONTRACTOR SHALL NOTIFY THE OWNER TO RESOLVE THE ISSUE PRIOR TO PROCEEDING.
13. THE CONTRACTOR SHALL REMOVE ALL WASTE MATERIAL.
14. FORM AND SUBGRADE INSPECTION BY THE INSPECTOR IS REQUIRED BEFORE POURING CONCRETE. FORTY–EIGHT HOURS NOTICE IS REQUIRED FOR FORM INSPECTION.
15. RIM ELEVATIONS OF UTILITY AND DRAINAGE STRUCTURES SHALL BE INSTALLED SO THAT RIMS MAY BE ADJUSTED ±0.5' TO MATCH FINISHED GRADE.
16. LAYOUT CURB AND SIDEWALK BEFORE SETTING VALVE BOXES AND UTILITY APPURTENANCES TO ENSURE THERE IS NO CONFLICT BETWEEN STRUCTURES AND HARD SURFACES.

Know what's below. Call before you dig.

Consulting & Design
VAN HOUTEN CONSULTING & DESIGN, LLC
(208) 930-4000
MERLE@VANHOUTENCD.COM
401½ E. SHERMAN AVE. STE. #211
COEUR D'ALENE, ID 83814
WWW.VANHOUTENCD.COM

PROFESSIONAL ENGINEER REGISTERED 12523 STATE OF IDAHO MERLE J. VAN HOUTEN
5/1/2024

TRAVERS PARK PLAYGROUND & SPLASH PAD CONSTRUCTION
GENERAL NOTES AND DETAILS
SANDPOINT, IDAHO

REVISIONS			
NO.	DATE	DESCRIPTION	BY

DATE: 5/1/2024
PROJECT #23–043ID
PARCEL #RPS0000214302A
DRAWN IAH
CHECKED MVH
PATH: _PROJECTS\2023\23–043ID – Travers Park Playground\DESIGN\CIVIL\DWG\PRODUCTION DRAWINGS

C0.1
SHEET 1 OF 3

UNAUTHORIZED REPRODUCTION OR TRANSLATION OF ANY PART OF THIS WORK WITHOUT THE WRITTEN PERMISSION OF VAN HOUTEN CONSULTING AND DESIGN, LLC IS STRICTLY PROHIBITED.

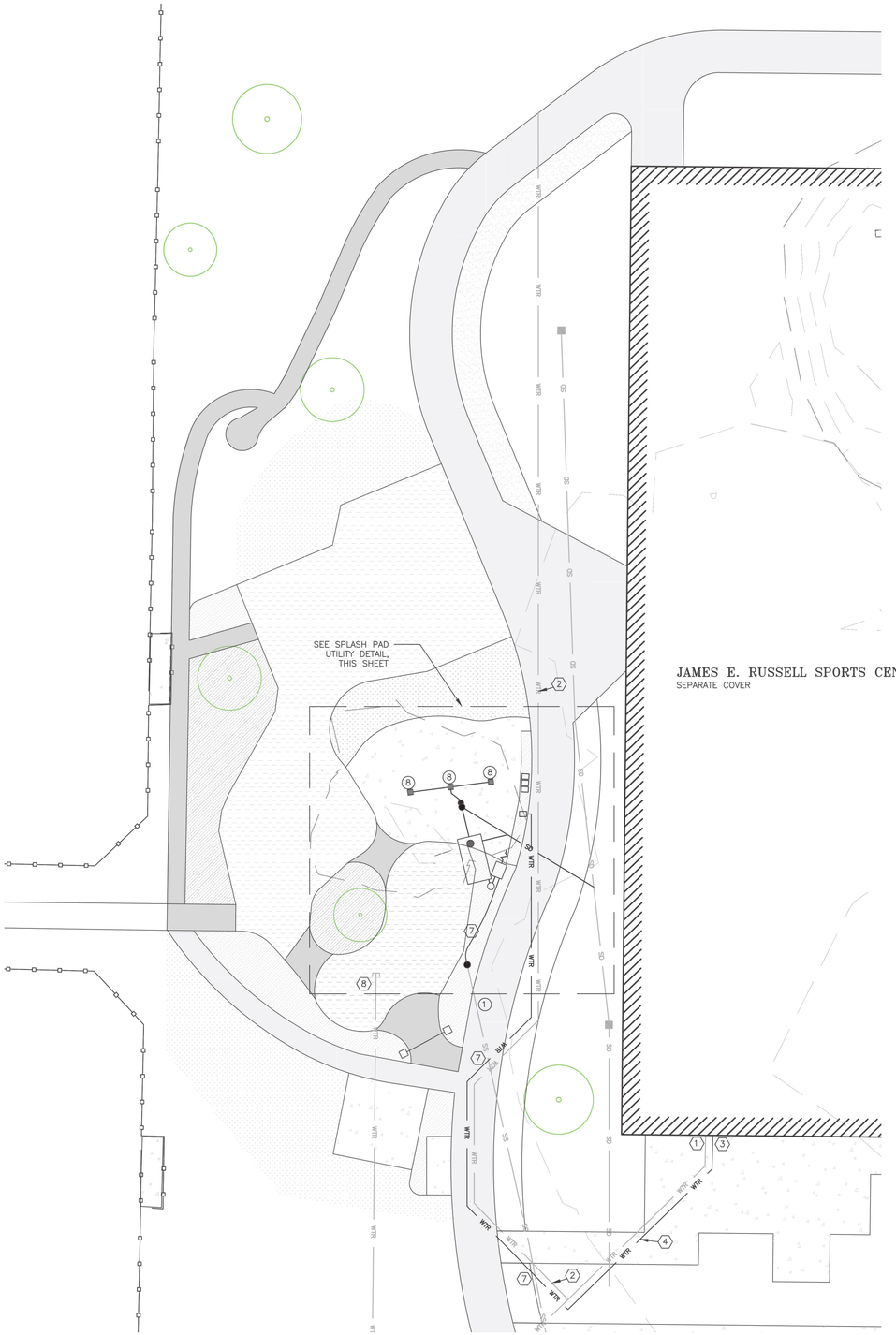

JAMES E. RUSSELL SPORTS CENTER
SEPARATE COVER

WATER REFERENCE NOTES

1. WATER SUPPLY TO TENNIS FACILITY, SEE TRAVERS PARK RECREATION CENTER STORMWATER AND UTILITY PLANS, SEPARATE COVER, BY OTHERS.
2. 8" C900 FIRE SERVICE. SEE TRAVERS PARK RECREATION CENTER STORMWATER AND UTILITY PLANS, SEPARATE COVER, BY OTHERS.
3. 1½" WATER SERVICE CONNECTION FROM TENNIS FACILITY TO SPLASH PAD. SEE TRAVERS PARK RECREATION CENTER PLUMBING PLANS, SEPARATE COVER, BY OTHERS.
4. SPLASH PAD WATER SERVICE LINE
   240LF OF CLASS 200 PSI 1½" POLYETHELYNE DOMESTIC WATER SERVICE PER CITY OF SANDPOINT WATER DEPARTMENT AND ISPWC STANDARDS. INSTALL IN SHARED TRENCH WITH OTHER WATER PIPES. COORDINATE INSTALLATION WITH TENNIS FACILITY CONSTRUCTION. MAINTAIN 5.0' MIN. BURY DEPTH.
5. 1½" SUPPLY TO 1" DOUBLE CHECK VALVE ASSEMBLY. SEE DCVA DETAIL, SHEET C0.1.
6. SPLASH PAD MANIFOLD CONFIGURATION.
   SEE SHEET LD-3, DETAIL C
7. WATER PIPE CROSSES NON-POTABLE PIPE MAINTAIN MINIMUM SEPARATION.
8. EX. WATER LINE DISCONNECTED FROM DEMOLISHED RESTROOM BUILDING. DO NOT CONNECT. ABANDON IN PLACE.

DRAINAGE REFERENCE NOTES

1. EXISTING SEWER SERVICE LINE. 4" TYPE 3034 SDR @ 3.0%±
   TOP OF PIPE IS ELEVATION 2103.64 AT 15' SOUTH OF EXISTING BATHROOMS. CONTRACTOR SHALL FIELD VERIFY SIZE, DEPTH, AND INTEGRITY PRIOR TO CONSTRUCTION.
2. INSTALL 4" CLEAN-OUT ON EXISTING SEWER SERVICE AT NEW CONNECTION POINT.
   INV. ELEV: 2103.13±
   SEE DETAIL, SHEET C0.1
3. IRRIGATION SYSTEM STORAGE TANK
   2,500 GALLON BONNER CONCRETE PRODUCTS MODEL #BCP402 OR APPROVED EQUAL.
   RIM ELEV: 2104.50
   TOP OF TANK ELEV: 2102.75
   INV. IN (10"): 2101.00
   INV. OUT (4" OVERFLOW): 2100.67
   INV. OUT (6" WET WELL): 2097.95
   BOTTOM OUTSIDE TANK ELEV: 2097.45
   SEE DETAILS "F" AND "G," SHEET LD-3.
4. 24" DIA IRRIGATION SYSTEM WET WELL
   6" SDR-35 INV IN = 2097.95
   SEE DETAILS "A", "B" AND "C," SHEET LD-4
5. IRRIGATION PUMP STATION SET IN UTILITY ENCLOSURE
   SEE DETAIL "C," SHEET LD-4 FOR DETAIL AND CONTINUATION
   FILTER FLUSH CONNECTS TO EXISTING SEWER SERVICE.
6. FILTER FLUSH CONNECTION TO EXISTING SEWER SERVICE
   30LF± OF 1" CLASS 200 POLYETHELYENE.
7. DIVERTER STRAINER SYSTEM
   WATER PLAY 30" I.D. MODEL 0010-4666, OR APPROVED EQUAL
   RIM ELEV: 2104.40
   INV. IN (10"): 2101.57
   INV. OUT (10"): 2101.57
   INV. OUT (4"): 2101.24
   SEE DETAIL "D," SHEET LD-3
8. 12" X 12" DRAINAGE CATCH BASIN
   RIM ELEV: 2104.33
   INV. ELEV: 2102.50
   SEE DETAIL E, SHEET LD-3
9. 10 LF OF 6" SDR-35 DRAIN PIPE @ 0.0%
   INV. ELEV: 2102.50
10. CATCH BASIN CONNECTION TO DIVERTER STRAINER
    5LF OF 6" DIA. SDR-35
    (2) 45° ELBOWS
    (1) 6" X 10" REDUCER
11. DIVERTER STRAINER CONNECTION TO STORAGE TANK
    8LF OF 10" SDR-35 @ 2.0%
12. DIVERTER STRAINER CONNECTION TO STORMWATER SYSTEM
    42LF OF 4" SDR-35 @ 7.9%
    (1) 8" WYE WITH 4" BRANCH
    SEE TRAVERS PARK RECREATION CENTER STORMWATER AND UTILITY PLAN FOR CONTINUATION, SEPARATE COVER, BY OTHERS
13. STORAGE TANK OVERFLOW CONNECTION TO STORMWATER SYSTEM
    7LF OF 4" SDR-35
    (1) 4" WYE
14. CONNECT 4" SDR 35 DRAINAGE PIPE TO 8" SDR 35 DRAINAGE PIPE, INV. ELEV. 2097.81±. SEE TRAVERS PARK RECREATION CENTER STORMWATER AND UTILITY PLAN FOR CONTINUATION, SEPARATE COVER, BY OTHERS.
15. REMOVE EXISTING SEWER CLEAN-OUT AND 30LF± OF EXISTING SEWER SERVICE.

STORAGE TANK NOTE:
GROUNDWATER IS KNOWN TO BE PERIODICALLY PRESENT AT THIS DEPTH OF EXCAVATION IN THIS LOCATION. CONTRACTOR SHALL CONSULT WITH A GEOTECHNICAL ENGINEER AND THE TANK MANUFACTURER TO ENSURE NO DAMAGES DUE TO SETTLING OR BUOYANCY OCCUR.

BASE BID NOTE:
SEE LANDSCAPE PLANS FOR BASE BID AND ALTERNATES.

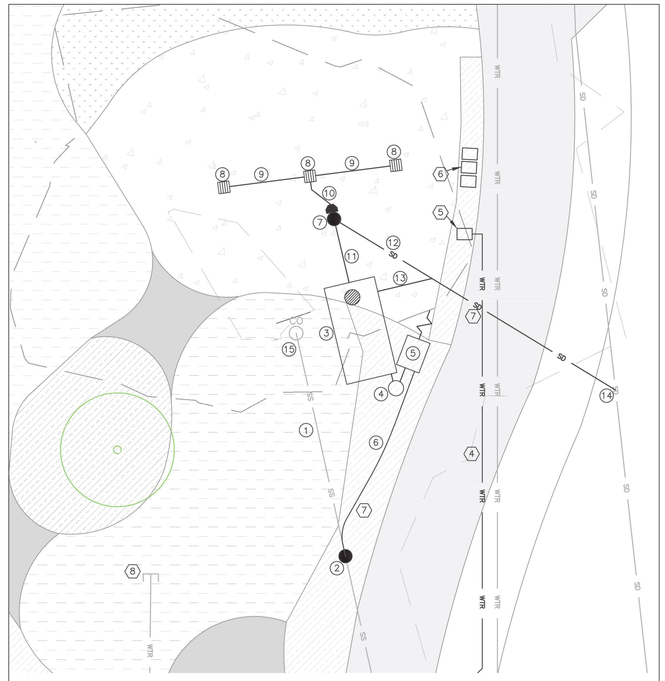

SCALE 1"=10'
WHEN PRINTED AT 22"X34"

SPLASH PAD UTILITY DETAIL

811 Know what's below. Call before you dig.

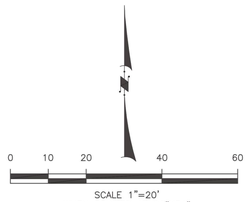

SCALE 1"=20'
WHEN PRINTED AT 22"X34"

VAN HOUTEN CONSULTING & DESIGN, LLC
Consulting & Design
401 E. SHERMAN AVE. STE. #211
COEUR D'ALENE, ID 83814
(208) 930-4000
MERLE@VANHOUTENCD.COM
WWW.VANHOUTENCD.COM

PROFESSIONAL ENGINEER REGISTERED 12523 STATE OF IDAHO MERLE J. VAN HOUTEN
5/1/2024

TRAVERS PARK PLAYGROUND & SPLASH PAD CONSTRUCTION
PLAYGROUND UTILITY PLAN
SANDPOINT, IDAHO

REVISIONS

NO.	DATE	DESCRIPTION	BY

DATE: 5/1/2024
PROJECT #23-043D
PARCEL #RP50000214302A
DRAWN: IAH
CHECKED: MVH
PATH: _PROJECTS\2023\23-043D - Travers Park\DESIGN\CIVIL\DWG\PRODUCTION DRAWINGS

C1.0
SHEET
2 OF 3

UNAUTHORIZED REPRODUCTION OR TRANSLATION OF ANY PART OF THIS WORK WITHOUT THE WRITTEN PERMISSION OF VAN HOUTEN CONSULTING AND DESIGN, LLC IS STRICTLY PROHIBITED.

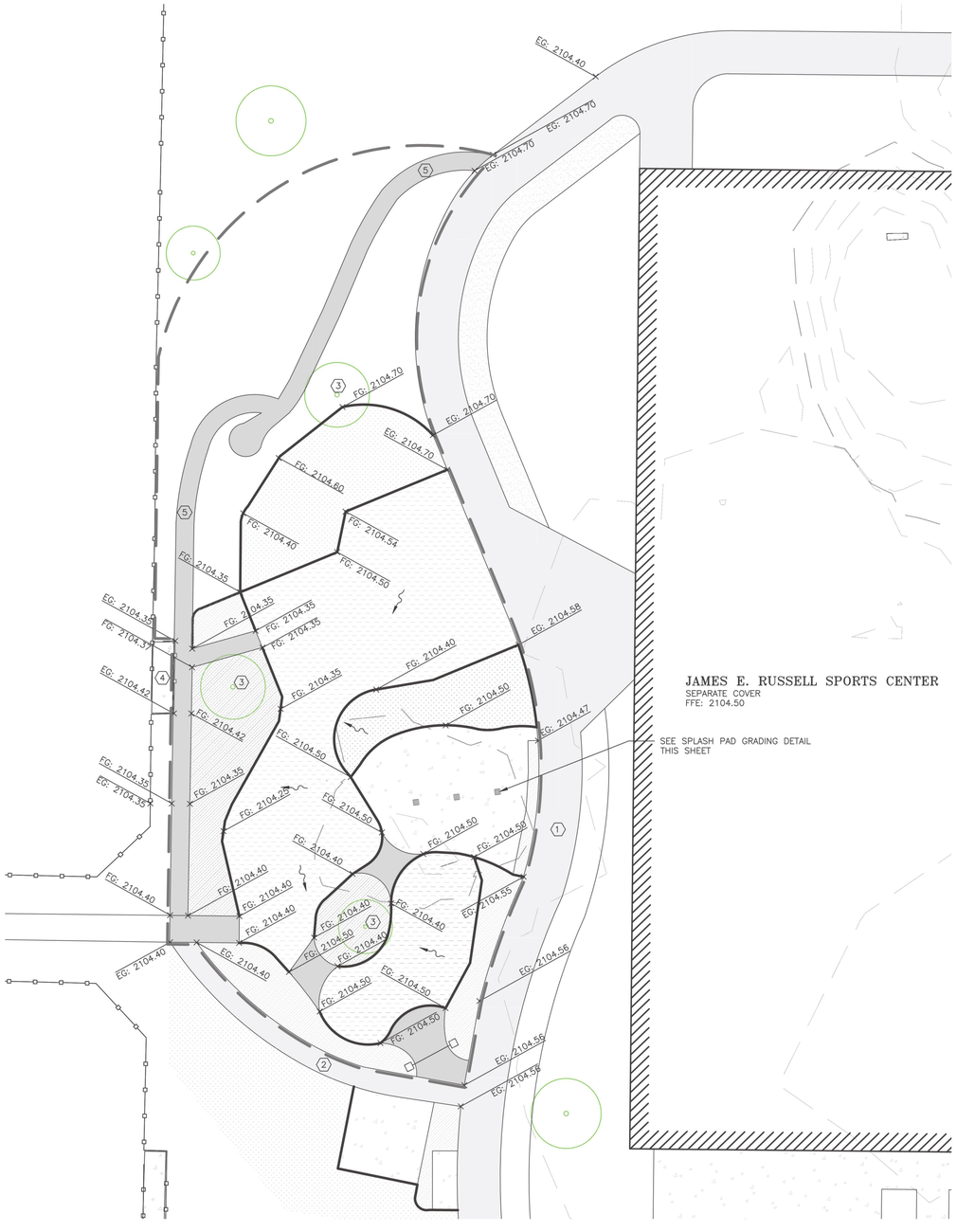

LEGEND

- EX. ASPHALT PAVEMENT
- ASPHALT PATH
- CONCRETE PAVEMENT
- IRRIGATED GRASS AREA
- LANDSCAPING MULCH
- TURF AREA
- GRAVEL PAVEMENT
- LIMITS OF DISTURBANCE TIE TO EX. GRADES
- CONCRETE CURB (SEE PLANS, BY MTLA, FOR DETAILS)
- EX. TREE (RETAIN AND PROTECT)

REFERENCE NOTES

1. MATCH ASPHALT SIDEWALK ELEVATIONS PER TRAVERS PARK RECREATION CENTER PLANS, BY OTHERS
2. MATCH CONCRETE SIDEWALK ELEVATION PER TRAVERS PARK RECREATION CENTER PLANS, BY OTHERS.
3. EX. TREE. MATCH EX. ELEVATION. RETAIN AND PROTECT
4. EX. DUGOUT. MATCH EX. ELEVATION. RETAIN AND PROTECT
5. SEE SHEET L-1 FOR GRADING OF PATHWAY AND SURROUNDING AREA

ABBREVIATIONS	
EG	EXISTING GRADE
FFE	FINISHED FLOOR ELEVATION
FG	FINISHED GRADE

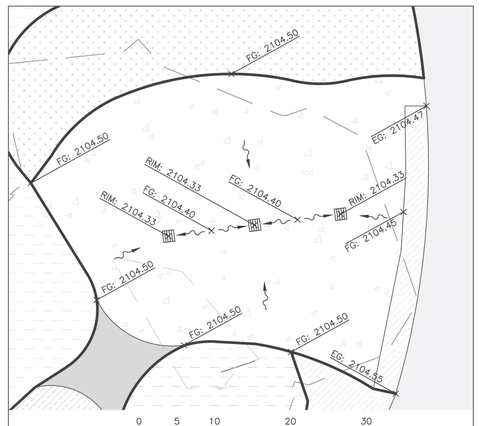

SPLASH PAD GRADING DETAIL

811 Know what's below. Call before you dig.

0 10 20 40 60
SCALE 1"=20'
WHEN PRINTED AT 22"X34"

VAN HOUTEN CONSULTING & DESIGN, LLC
Consulting & Design
401 E. SHERMAN AVE. STE. #211
COEUR D'ALENE, ID 83814
(208) 930-4000
MERLE@VANHOUTENCD.COM
WWW.VANHOUTENCD.COM

PROFESSIONAL ENGINEER REGISTERED 12823 STATE OF IDAHO MERLE L. VAN HOUTEN
5/1/2024

TRAVERS PARK PLAYGROUND & SPLASH PAD CONSTRUCTION

PLAYGROUND GRADING PLAN

SANDPOINT, IDAHO

REVISIONS

NO.	DATE	DESCRIPTION	BY

DATE: 5/1/2024
PROJECT #23-0430
PARCEL #RP50000214302A
DRAWN: IAH
CHECKED: MVH
PATH: _PROJECTS\2023\23-0430 - Travers Park\DESIGN\CIVIL\DWG\PRODUCTION DRAWINGS

C2.0
SHEET
3 OF 3

UNAUTHORIZED REPRODUCTION OR TRANSLATION OF ANY PART OF THIS WORK WITHOUT THE WRITTEN PERMISSION OF VAN HOUTEN CONSULTING AND DESIGN, LLC IS STRICTLY PROHIBITED.

FIRE ALARM SYMBOLS

- DOOR HOLD OPEN
- DUCT SMOKE DETECTOR
- FACP — FIRE ALARM CONTROL PANEL
- FAA — FIRE ALARM ANNUNCIATOR PANEL
- FASP — FIRE ALARM SLAVE PANEL
- FIRE BELL
- FLOW SWITCH
- HEAT DETECTOR (CEILING MOUNTED)
- W — HEAT DETECTOR (WALL MOUNTED)
- HORN (WALL MOUNTED)
- C — HORN (CEILING MOUNTED)
- MANUAL PULL STATION
- MICROPHONE
- MM — MONITOR MODULE
- R — OUTPUT RELAY
- SMOKE DETECTOR (CEILING MOUNTED)
- W — SMOKE DETECTOR (WALL MOUNTED)
- SPEAKER (WALL MOUNTED)
- C — SPEAKER (CEILING MOUNTED)
- SPEAKER STROBE (WALL MOUNTED)
- C — SPEAKER STROBE (CEILING MOUNTED)
- STROBE (WALL MOUNTED)
- C — STROBE (CEILING MOUNTED)
- TAMPER DETECTOR (WITH VALVE)
- TAMPER DETECTOR (WITHOUT VALVE)

SCHEMATIC SYMBOLS

- AMP METER
- AUTOMATIC TRANSFER SWITCH
- AUTOMATIC TRANSFER SWITCH (4-POLE BYPASS ISOLATION)
- CIRCUIT BREAKER
- GFI — CIRCUIT BREAKER (GFI)
- 3P-1600 AF / 1200 AT — INDICATES A BREAKER WITH A 1600 AMP FRAME AND A 1200 AMP TRIP SETTING
- CONTACT (N.C.)
- CONTACT (N.O.)
- CONTACT (REMOTE, N.C.)
- CONTACT (REMOTE, N.O.)
- DISCONNECT SWITCH
- E — ELECTRONIC INTERLOCK
- ENCLOSED CIRCUIT BREAKER
- FEEDER IDENTIFICATION
- FUSE
- FUSIBLE SWITCH
- GENERATOR
- GROUND
- GROUNDED WYE
- INDUCTOR
- LINE TAP
- METER
- MOTOR
- PNL — PANELBOARD (# INDICATES NAME)
- PNL — PANEL OR CABINET
- SEPARABLE CONNECTIONS
- SPACE IN PANELBOARD
- SWITCH
- SPD — SURGE PROTECTION DEVICE
- TRANSFORMER
- V — VOLT METER
- C — CUSTOMER METER

SYMBOLS & ABBREVIATIONS

GENERAL SYMBOLS

- # — KEY NOTE
- EQ-# — EQUIPMENT IDENTIFIER
- DETAIL NUMBER / DETAIL REFERENCE / SHEET NUMBER
- DETAIL NUMBER / DETAIL REFERENCE / MATCHED SHEET NUMBER / CURRENT SHEET NUMBER (1 / Ref Sht / Ref Sht)
- MATCH LINE REFERENCE
- Sht # — MATCHED SHEET NUMBER
- ROOM NAME — ROOM NAME AND NUMBER
- CONNECTION TO EXISTING (# INDICATES EXISTING SIZE)
- 1 — REVISION NUMBER
- SIM — SECTION NUMBER
- 1 / A101 — SECTION REFERENCE / SHEET NUMBER
- N — NORTH ARROW
- CENTER LINE

NOTE:
SYMBOLS AND ABBREVIATIONS ON THE DRAWINGS SHALL BE INTERPRETED IN ACCORDANCE WITH THE LEGENDS WHEREVER APPLICABLE. NOT ALL SYMBOLS AND ABBREVIATIONS IN THE LEGENDS ARE NECESSARILY USED FOR THE PROJECT. ALL SIZES ARE IN INCHES, UNLESS OTHERWISE NOTED.

LINEWEIGHT LEGEND

- NEW WORK
- EXISTING TO REMAIN OR NOT IN CONTRACT
- DEMOLITION
- FUTURE WORK

SECURITY SYMBOLS

- CARD READER
- DOOR INTERLOCK
- DOOR POSITION INDICATION SWITCH (INTERRUPTIBLE)
- DOOR POSITION INDICATION SWITCH (UNINTERRUPTIBLE)
- DURESS ALARM (WITH LIGHT)
- DURESS ALARM (WITHOUT LIGHT)
- ELECTRIC LOCK
- ELECTRIC LOCK (DEADBOLT)
- K — KEYED SWITCH
- M — MOTION DETECTOR
- R — PUSH BUTTON REX
- SECURITY CAMERA (STANDARD)
- SEC — SECURITY CONTROL PANEL
- R — SENSOR REX
- KEYPAD
- M — VSS MONITOR
- W — WINDOW BREAKAGE DETECTOR

POWER SYMBOLS

- CONDUIT DROP
- CONDUIT RISE
- DISCONNECT SWITCH
- DISTRIBUTION PANEL
- ELECTRICAL PANEL
- J — JUNCTION BOX
- M — METER
- MOTOR
- M — MOTOR STARTER
- $ M — MOTOR STARTER (MANUAL)
- PUSH TYPE SWITCH
- RECEPTACLE, 20 AMP DUPLEX
- RECEPTACLE, CEILING MOUNTED
- RECEPTACLE, CEILING 20 AMP DUPLEX
- RECEPTACLE, CEILING DUPLEX STANDBY POWER
- U — RECEPTACLE, CEILING DUPLEX UPS BACKED
- CH-1A — EQUIPMENT TAG. REFER TO EQUIPMENT SHEDULE SHEET FOR DETAILS.
- RECEPTACLE, DUPLEX
- RECEPTACLE, DUPLEX FLOOR MOUNTED
- G — RECEPTACLE, DUPLEX GFI
- RECEPTACLE, DUPLEX ISOLATED GROUND
- RECEPTACLE, DUPLEX SWITCHED
- RECEPTACLE, DUPLEX STANDBY POWER
- U — RECEPTACLE, DUPLEX UPS BACKED
- RECEPTACLE, DUPLEX WITH USB
- RECEPTACLE, QUAD
- RECEPTACLE, QUAD FLOOR MOUNTED
- Rx y — RECEPTACLE, FLOORBOX. 'X' INDICATES THE QUANTITY OF DUPLEX OUTLETS TO BE INSTALLED. 'Y' INDICATES THE FLOORBOX TYPE. REFER TO SHEET EXXX FOR DETAILS ON EACH TYPE.
- RECEPTACLE, SINGLE
- RECEPTACLE, SPECIAL
- RECEPTACLE, SPECIAL FLOOR MOUNTED
- T — TRANSFORMER
- CONCEALED CONDUIT: UNLESS OTHERWISE INDICATED, DENOTES 3/4"C-2#12+1#12G
- SURFACE MOUNTED RACEWAY

LIGHTING SYMBOLS

- 1'x4' LIGHT
- 2'x2' LIGHT
- 2'x4' LIGHT
- DOWNLIGHT
- EXIT LIGHT
- PENDANT LIGHT
- POLE MOUNTED LIGHT
- STRIP LIGHT
- TRACK LIGHT
- WALL MOUNTED EMERGENCY LIGHT
- WALL SCONCE
- WALL WASHER
- a — LIGHT FIXTURE WITH LOWER CASE LETTER INDICATING ZONING FOR LIGHTING CONTROLS
- CRITICAL POWER LIGHT
- EMERGENCY POWER LIGHT
- DL — DAYLIGHT SENSOR
- V — VACANCY SENSOR
- O — OCCUPANCY SENSOR
- P — PHOTOCELL SENSOR
- PDZ — PRIMARY DAYLIGHT ZONE
- SDZ — SECONDARY DAYLIGHT ZONE
- $ — LIGHTING SWITCH (STANDARD)
- $3 — LIGHTING SWITCH (3-WAY)
- $4 — LIGHTING SWITCH (4-WAY)
- $L — LOW VOLTAGE LIGHTING SWITCH DETAILS - SHOWN ON LOW VOLTAGE LIGHTING DETAIL SHEET
- LCP — LIGHTING CONTROL PANEL

ABBREVIATIONS

Ø	DIAMETER	LSI	INDICATES A BREAKER WITH FULLY ADJUSTABLE LONG TIME, SHORT TIME AND INSTANTANEOUS TRIP CHARACTERISTICS
ABV	ABOVE		
AC	ABOVE COUNTER		
AFF	ABOVE FINISH FLOOR	LSIA	INDICATES A BREAKER WITH FULLY ADJUSTABLE LONG TIME, SHORT TIME, INSTANTANEOUS AND GROUND FAULT ALARM TRIP CHARACTERISTICS
AFG	ABOVE FINISH GRADE		
AL	ALUMINUM		
AR	AS REQUIRED	LSIG	INDICATES A BREAKER WITH FULLY ADJUSTABLE LONG TIME, SHORT TIME, INSTANTANEOUS AND GROUND FAULT TRIP CHARACTERISTICS
ATS	AUTOMATIC TRANSFER SWITCH		
BLDG	BUILDING		
C	CONDUIT	MAX	MAXIMUM
CCT	CIRCUIT	MFR	MANUFACTURER
CKT	CIRCUIT	MIN	MINIMUM
CLG	CEILING	MMS	MANUAL MOTOR STARTER
CO	CONDUIT ONLY WITH 1/4" POLYPROPYLENE PULL ROPE	MNT	MOUNT(ED)
CP	CHROME PLATED	(N)	NEW
CT	CURRENT TRANSFORMER	N	NEUTRAL
CU	COPPER	NL	NIGHT LIGHT
(D)	DEMOLISH	N.C.	NORMALLY CLOSED
DIA	DIAMETER	NIC	NOT IN CONTRACT
DISC	DISCONNECT	N.O.	NORMALLY OPEN
DIST	DISTRIBUTION	NORM	NORMAL
DIV	DIVISION	UNO	UNLESS NOTED OTHERWISE
DWG	DRAWING	PNL	PANEL
DX	DUPLEX	QIG	QUAD ISOLATED GROUND
DZ	DAYLIGHT ZONE	REQ'D	REQUIRED
(E)	EXISTING TO REMAIN	RM	ROOM
EA	EACH	SIM	SIMILAR
EM	EMERGENCY	SPST	SINGLE POLE/SINGLE THROW SWITCH
FLR	FLOOR, OR FLOOR MOUNTED	SS	STAINLESS STEEL
FT	FEET	SW	SWITCH
G	GROUND	T	TAMPER PROOF RECEPTACLE
GA	GAUGE	TYP	TYPICAL
GFI	GROUND FAULT INTERRUPT	W	WIDE
GND	GROUND	W/	WITH
H	HIGH	W/IN	WITHIN
HT	HEIGHT	W/O	WITHOUT
IG	ISOLATED GROUND	WP	WEATHERPROOF, RECEPTACLES TO BE GFCI
IN	INCHES	X	EXISTING DEVICE TO BE REPLACED WITH NEW DEVICE AT SAME LOCATION
L	LONG		
LI	INDICATES A BREAKER WITH FULLY ADJUSTABLE LONG TIME AND INSTANTANEOUS TRIP CHARACTERISTICS	XFMR	TRANSFORMER

ANNOTATION

+XX" MOUNTING HEIGHT (AFF OR AFG)

(n)x"C-a#b+c#d

- n = QUANTITY OF CONDUIT
- x = SIZE OF CONDUIT
- a = QUANTITY OF CONDUCTORS
- b = CONDUCTOR WIRE SIZE
- c = QUANTITY OF GROUND
- d = GROUND WIRE SIZE

PROFESSIONAL ENGINEER LICENSED STATE OF IDAHO DEAN JOSEPH CUNNINGHAM

MW Engineers
601 W. Bannock, Ste. 1500
Boise, Idaho 83702, USA
208.629.7676
mwengineers.com

TRAVERS PARK
PLAYGROUND & SPLASH PAD CONSTRUCTION

#	REVISIONS	DATE

LEGENDS & ABBREVIATIONS - ELECTRICAL

DWN BY: NBH
CHK BY: DJC
SCALE: 12" = 1'-0"
DATE: 05/01/24

E01

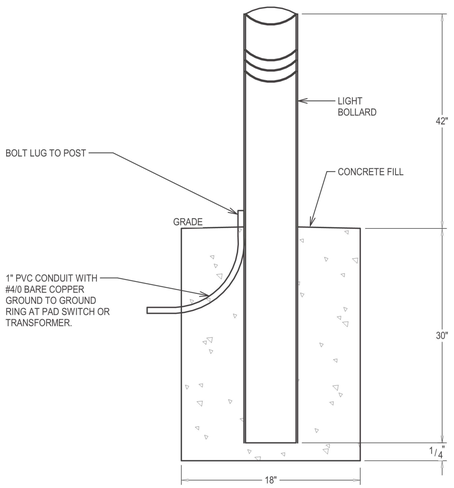

1 TYPICAL LIGHT BOLLARD
N.T.S.

ELECTRICAL SPECIFICATIONS

GENERAL

1. ELECTRICAL WORK SHALL INCLUDE FURNISHING LABOR, MATERIALS, EQUIPMENT, AND SERVICES TO CONSTRUCT AND INSTALL THE ELECTRICAL SYSTEMS AS SHOWN ON THESE DRAWINGS AND DESCRIBED IN THESE SPECIFICATIONS.
2. PRODUCT DURABILITY: AT MINIMUM, MANUFACTURED ITEMS SHALL HAVE BEEN INSTALLED AND USED, WITHOUT MODIFICATION, RENOVATION OR REPAIR, ON OTHER PROJECTS FOR NOT LESS THAN THREE YEARS PRIOR TO THE DATE OF BIDDING THE PROJECT.
3. INSTALL CONDUIT, ELECTRICAL EQUIPMENT AND ACCESSORIES TO FACILITATE MAINTENANCE AND REPAIR OR REPLACEMENT. FOR LARGE CENTRAL EQUIPMENT PROVIDE MINIMUM 30" CLEAR AND INDICATE SUCH ON PLANS.
4. WORK SHALL BE AS FOLLOWS:
   A. MANUFACTURED ITEMS FURNISHED SHALL BE THE CURRENT, CATALOGED PRODUCT OF THE MANUFACTURER.
   B. EQUIPMENT AND ITEMS OF ANY ONE CLASSIFICATION WHICH ARE USED IN QUANTITY SHALL BE PRODUCTS OF ONE MANUFACTURER AND SHALL BE USED ONLY FOR SERVICES RECOMMENDED BY THE MANUFACTURER.
   C. ASBESTOS CONTAINING MATERIALS ARE NOT PERMITTED.

CODES, PERMITS AND FEES

1. THE INSTALLATION OF THIS WORK SHALL COMPLY WITH THE REQUIREMENTS OF APPLICABLE LAWS, ORDINANCES, AND RULES OF THE CITY OF SPOKANE, THE STATE OF WASHINGTON, WISHA, THE NATIONAL BOARD OF FIRE UNDERWRITERS, AND THE NATIONAL ELECTRICAL CODE. IF A CONFLICT OCCURS BETWEEN THESE RULES AND THIS SPECIFICATION, THE RULES SHALL GOVERN. NOTHING IN THESE DRAWINGS AND SPECIFICATIONS SHALL BE CONSTRUED TO PERMIT WORK NOT CONFORMING WITH GOVERNING CODES. THIS SHALL NOT BE CONSTRUED AS RELIEVING THE CONTRACTOR FROM COMPLYING WITH REQUIREMENTS OF THE PLANS OR SPECIFICATIONS WHICH MAY BE IN EXCESS OF REQUIREMENTS OF HEREIN BEFORE MENTIONED RULES AND NOT CONTRARY TO SAME.
2. OBTAIN AND PAY FOR REQUIRED STATE AND LOCAL INSTALLATION INSPECTIONS. DELIVER ORIGINALS OF THESE CERTIFICATES IN THE OPERATING AND MAINTENANCE INSTRUCTIONS.
3. MATERIALS SHALL BE UL LISTED AND LABELED.
4. PROVIDE ALL COMMISSIONING AS REQUIRED BY WSEC 2018 AND ASSOCIATED DOCUMENTATION.

GUARANTEE

1. GUARANTEE WORK FOR A PERIOD OF ONE YEAR FROM FINAL ACCEPTANCE. ANY DEFECTIVE WORK OR MATERIAL DISCOVERED DURING THIS PERIOD SHALL BE REPAIRED OR REPLACED AT NO ADDITIONAL CHARGE.

SLEEVES & FIRESTOPING

1. WHERE CABLES OR CORRUGATED PLASTIC DUCTS PASS THROUGH WALLS, CEILINGS OR FLOORS, PROVIDE SLEEVES OF SUFFICIENT SIZE TO FACILITATE INSTALLATION OF THE SAME.

2. PROTECT PENETRATIONS THROUGH, AND OPENINGS IN, FIRE-RATED WALL, CEILING AND FLOOR ASSEMBLIES, WHERE SUCH OPENINGS CONTAIN ELECTRICAL WORK WITHIN THE PROJECT AREA, REGARDLESS OF WHETHER SUCH WORK WAS INSTALLED ON THIS PROJECT, AND WHERE THE OPENINGS WERE MADE OUTSIDE THE PROJECT AREA TO ADMIT ELECTRICAL WORK INSTALLED UNDER THE PROJECT. OPENINGS ACCOMMODATING SUCH ITEMS AS RACEWAY, CABLE TRAY, OUTLET BOXES, AND EQUIPMENT BACKBOXES, SHALL BE PROTECTED. OPENINGS LEFT BY REMOVAL OF ELECTRICAL WORK UNDER THIS PROJECT SHALL ALSO BE PROTECTED.

3. PENETRATIONS AND OPENINGS SHALL BE PROTECTED TO RETAIN THE INTEGRITY OF THE TIME-RATED CONSTRUCTION BY MAINTAINING AN EFFECTIVE BARRIER AGAINST THE SPREAD OF FLAME, SMOKE AND GASES. WHERE THE PENETRATING ELEMENTS ARE CABLES CORRUGATED PLASTIC DUCTS OR OTHER COMBUSTIBLE ITEMS, FIRESTOPPING MATERIALS SHALL BE ITUMESCENT TYPE. FIRESTOPPING SHALL CONSIST OF UL LISTED FIRE-RATED ASSEMBLIES AND SHALL BE INSTALLED IN ACCORDANCE WITH UL APPROVED INSTALLATION DETAILS.

DEMOLITION

1. MAINTAIN CONTINUITY OF ELECTRICAL SERVICES. WHERE INTERRUPTION OF SERVICE IS NECESSARY, MEASURES SHALL BE TAKEN TO MINIMIZE THE INTERRUPTION AND THE WORK SHALL BE SCHEDULED WITH THE OWNER'S REPRESENTATIVE SUCH THAT THE INTERRUPTIONS DO NOT LIMIT THE OWNER'S USE OF EXISTING OCCUPIED FACILITIES.

2. REMOVE FIXTURES, DEVICES, CONDUIT, WIRING AND MISCELLANEOUS EQUIPMENT AS INDICATED ON DRAWINGS OR AS REQUIRED BY JOB CONDITIONS.

3. INACTIVE AND ABANDONED WIRE AND CABLE, INCLUDING DISCONNECTED CIRCUITS FROM WHICH ALL TERMINAL DEVICES HAVE BEEN ELIMINATED, SHALL BE REMOVED BACK TO THE SOURCE OF SUPPLY.

4. ABANDONED RACEWAY SHALL BE REMOVED.

5. MAINTAIN ACCESS TO EXISTING ELECTRICAL DEVICES, OUTLETS AND JUNCTION BOXES THAT REMAIN. MODIFY THE INSTALLATION OR PROVIDE ACCESS PANELS AS APPROPRIATE.

6. OUTLET BOXES AND OTHER ELECTRICAL OPENINGS THAT REMAIN IN EXISTING WALLS SHALL HAVE NEW PLATES OR SPECIAL COVERS INSTALLED. NEW DEVICE RINGS OR EXTENSION RINGS SHALL BE INSTALLED ON EXISTING OUTLET BOXES LOCATED IN WALLS THAT RECEIVE NEW FINISHED SURFACES AS REQUIRED TO MATCH THE THICKNESS OF THE NEW WALL SURFACES.

7. COORDINATE DEMOLITION WITH THE WORK OF OTHER TRADES.

8. MATERIALS REMOVED DURING THE DEMOLITION PHASE OF THE WORK SHALL BE STORED OR PROPERLY DISPOSED OF AS DIRECTED BY THE OWNER.

9. PERFORM CUTTING, DRILLING AND PATCHING REQUIRED TO PERFORM THE WORK SPECIFIED IN DIVISION 26, 27, & 28. PATCHING MATERIALS SHALL MATCH THE EXISTING MATERIALS.

10. CONSTRUCTION OF A STRUCTURAL NATURE SHALL NOT BE DISTURBED WITHOUT THE APPROVAL OF THE ARCHITECT. IN GENERAL, CUTTING THROUGH FLOORS, WALLS AND PARTITIONS SHALL BE AVOIDED. ONLY WHERE ABSOLUTELY NECESSARY AND APPROVED BY ARCHITECT AND ENGINEER WILL SUCH CUTTING BE PERMITTED.

VIBRATION ISOLATION AND SEISMIC RESTRAINT FOR CONDUIT AND EQUIPMENT

1. SEISMIC RESTRAINT OF EQUIPMENT, DUCTWORK AND PIPING SHALL BE IN ACCORDANCE WITH LATEST ENACTED VERSION OF APPLICABLE ASHRAE STANDARD, ASCE STANDARD, AND IBC.
2. SERVICES OF ENGINEER REGISTERED AND LICENSED IN WASHINGTON STATE SHALL DESIGN SEISMIC RESTRAINT SYSTEMS AND METHODS OF ANCHORAGE TO BUILDING STRUCTURE, AND PROVIDE STAMPED AND SIGNED DOCUMENTS OF DESIGN. SIGNED STANDARD DETAILS ARE ACCEPTABLE. IF PROFESSIONAL ENGINEER DETERMINES THAT ASCE, IBC, OR CURRENT ADOPTED CODE DO NOT REQUIRE SOME OF THE EQUIPMENT OR PIPING TO BE SEISMICALLY RESTRAINED, THEN A LETTER STAMPED AND SIGNED FROM THE PROFESSIONAL ENGINEER TO THAT EFFECT IS REQUIRED.
3. NON-STRUCTURAL SEISMIC CRITERIA SHALL BE COORDINATED WITH STRUCTURAL SEISMIC CRITERIA. SEISMIC BRACING OF NON-STRUCTURAL COMPONENTS WILL APPLY ONLY TO NEWLY INSTALLED SYSTEMS, EQUIPMENT, AND MATERIAL, APPROPRIATE TO STRUCTURAL SEISMIC QUALITY OF BUILDING IN WHICH CONSTRUCTION OCCURS, UNLESS DIRECTED OTHERWISE BY OWNER.

GROUNDING

1. PROVIDE COPPER GROUNDING CONDUCTORS.
2. CONDUITS WILL BE PROPERLY BONDED WITH INSULATED GROUND WIRE RUN WITH CONDUCTORS.
3. CONDUITS PASSING THRU METAL ENCLOSURES SHALL CONTAIN INSULATED THROAT BUSHINGS. THE BUSHING SHALL BE CONNECTED TO THE GROUND BUS AND METAL FRAME OF THE EQUIPMENT WITH A BONDING JUMPER.

RACEWAYS AND FITTINGS

1. RIGID METAL CONDUIT (RMC) AND INTERMEDIATE METALLIC CONDUIT (IMC) HEAVY WALL, GALVANIZED STEEL, SCHEDULE 40, THREADED. FITTINGS SHALL BE THREADED GALVANIZED OR CADMIUM PLATED STEEL FITTINGS.
2. ELECTRIC METALLIC TUBING (EMT) SHALL BE GALVANIZED TUBING. FITTINGS: STEEL, RAIN TIGHT SET SCREW TYPE WITH NYLON INSULATED THROATS ON CONNECTORS.
3. FLEXIBLE METAL CONDUIT SHALL BE FLEXIBLE, INTERLOCKED, ALUMINUM CONSTRUCTION, SPIRAL STRIP. FITTINGS AND CONDUIT BODIES: ANSI/NEMA FB 1. ALL STEEL, GALVANIZED, SET SCREW TYPE. SPECIFICALLY DESIGNED FOR THE PURPOSE.
4. LIQUID TIGHT FLEXIBLE CONDUIT SHALL BE FLEXIBLE, INTERLOCKED, GALVANIZED STEEL, SPIRAL STRIP WITH AN OUTER LIQUIDTIGHT, NON-METALLIC, SUNLIGHT-RESISTANT JACKET. FITTINGS.
5. PLASTIC CONDUIT SHALL BE SCHEDULE 40 PVC MINIMUM, LISTED, SUNLIGHT RESISTANT, RATED FOR 90 DEGREES C CONDUCTORS.
6. CONDUCTORS FROM ONE SYSTEM SHALL NOT BE INTERMIXED IN THE SAME RACEWAY AS ANOTHER SYSTEM. EXAMPLES INCLUDE 480Y/277 WITH 208Y/120 VOLT CIRCUITS, EMERGENCY POWER, LINE VOLTAGE CIRCUITS WITH LOW VOLTAGE WIRING WITH NORMAL POWER, ETC.
7. ROUTE RACEWAYS IN COMMON SPACES AND CORRIDORS WITHOUT BLOCKING ACCESS TO JUNCTION BOXES, VALVES, MECHANICAL EQUIPMENT OR CEILING PANEL REMOVAL.
8. INSTALL RACEWAYS LEVEL AND SQUARE, PARALLEL OR PERPENDICULAR TO BUILDING LAYOUT.
9. CONDUIT SCHEDULE:
   A. INDOOR, EXPOSED - ELECTRIC METALLIC TUBING
   B. INDOOR, EXPOSED, SUBJECT TO DAMAGE - RIGID STEEL
   C. INDOOR, CONCEALED - ELECTRIC METALLIC TUBING, RIGID STEEL, OR INTERMEDIATE
   D. INDOOR, CONNECTED TO VIBRATING EQUIPMENT - FLEXIBLE METAL CONDUIT OR LIQUIDTIGHT FLEXIBLE METAL CONDUIT
   E. INDOOR, DAMP - RIGID STEEL CONDUIT OR ELECTRIC METALLIC TUBING (WITH COMPRESSION FITTINGS)
   F. OUTDOOR, DAMP - PVC, RIGID STEEL CONDUIT, OR ELECTRIC METALLIC TUBING (WITH COMPRESSION FITTINGS)

ELECTRICAL BOXES

1. SHEET METAL OUTLET BOXES: GALVANIZED STEEL. PLASTIC BOXES ARE ALLOWED FOR WOOD FRAMED WALLS AND CEILINGS.
2. EQUIPMENT SUPPORTING BOXES: RATED FOR WEIGHT FOR EQUIPMENT SUPPORTED.

PULL AND JUNCTION BOXES

1. OUTLET, PULL BOXES AND JUNCTION BOXES SHALL BE GALVANIZED STEEL MINIMUM 4 INCH SQUARE BY 2 1/8" INCHES DEEP FOR USE WITH 1 INCH CONDUIT AND SMALLER.
2. ON CONDUIT SYSTEMS USING 1 1/4" OR LARGER, PULL AND JUNCTION BOXES SHALL BE SIZED PER NEC BUT NOT LESS THAN 4 11/16" SQUARE.
3. WHERE BOXES ARE INSTALLED IN MASONRY WALLS, PROVIDE MASONRY BOXES 3 1/2" DEEP.
4. PROVIDE DEVICE RINGS. SIZE AS REQUIRED.
5. LOW VOLTAGE CABLE INSTALLATIONS, THE BOXES SHALL BE A 4 11/16" SQUARE BOX WITH SINGLE GANG MUDRING AND BLANK COVERPLATE.

WIRE AND CABLE

1. SINGLE CONDUCTOR, TYPE THW, THHN/THWN OR XHHW INSULATION, RATED 600 VOLTS.
2. UTILIZE LIQUID-TITE OR COMPRESSION FITTINGS FOR WET AREAS.
3. PROVIDE STRANDED CONDUCTORS FOR #14 AWG AND LARGER.
4. SPLIT BOLT CONNECTORS ARE NOT ACCEPTABLE.
5. CONDUCTORS #1/0 AWG AND SMALLER SHALL BE COPPER.
6. MECHANICAL EQUIPMENT FEEDERS AND CONNECTIONS SHALL BE COPPER.
7. PROVIDE PLENUM RATED CABLE FOR RETURN AIR PLENUM LOCATIONS IF ACCEPTABLE TO LOCAL AHJ.
8. NEW CONDUCTORS SHALL NOT BE INSTALLED IN EXISTING CONDUIT WITH EXISTING CONDUCTORS. CONFIRM USE OF SPARE CIRCUITS IN PANEL OR JUNCTION BOXES.

WIRING DEVICES

1. PROVIDE TAMPER RESISTANT DEVICES FOR ALL PUBLIC ACCESSIBLE LOCATIONS.

SUPPORTING STRUCTURES

1. STEEL CHANNEL SUPPORTS: GALVANIZED OR PAINTED STEEL.
2. DESIGN SUPPORTS TO CARRY WEIGHT OF EQUIPMENT AND CONDUIT, INCLUDE WIRING.

IDENTIFICATION

1. IDENTIFICATION OF EQUIPMENT, CONDUCTORS AND ELECTRICAL DEVICES SHALL MEET FACILITY STANDARD (INCLUDING BAR CODE FOR FACILITIES WHICH HAVE ESTABLISHED BAR CODING PROCEDURES). COORDINATE WITH OWNER.
2. EQUIPMENT NAMEPLATES: SHALL BE PROVIDED FOR NEW EQUIPMENT OR OTHER DEVICE INCLUDING SPECIAL INSTRUCTION FOR USE; EQUIPMENT NAMEPLATES SHALL HAVE UNIQUE EQUIPMENT IDENTIFICATION NUMBER AND BE COORDINATED WITH EXISTING EQUIPMENT NUMERICALLY.
3. JUNCTION, PULL, AND CONNECTION BOXES: IDENTIFY JUNCTION, PULL, AND CONNECTION BOXES EXPOSED IN NON-FINISHED AREAS BY NEATLY SPRAY PAINTING THE COVER PLATE. CONFORM TO FACILITY STANDARD COLORS FOR SYSTEM TYPE. BOX SHALL HAVE PANEL AND CIRCUIT(S) NOTED ON COVER PLATE.
4. CONDUCTOR AND CABLES: A) EXTEND FACILITY STANDARD COLORS FOR IDENTIFICATION. B) PROVIDE FIELD-APPLIED COLOR CODED CONDUCTOR TAPE FOR A MINIMUM DISTANCE OF 6" FROM TERMINAL POINTS AND IN BOXES.
5. DEVICE COVER PLATES:
   A. PROVIDE ENGRAVED PANEL AND CIRCUIT NUMBER OR SELF-ADHESIVE TYPE LABELS FOR SWITCHES UTILIZING BLACK TEXT AND CLEAR TAPE. FOR RENOVATION PROJECTS, IT IS ACCEPTABLE TO MATCH EXISTING.
   B. LABEL COVER PLATES FOR SWITCHES, ETC. AS FOLLOWS (IN ADDITION TO PANEL-CIRCUIT NUMBER LABELS):
      I. SPECIAL PURPOSE SWITCHES OR CONTROLS, I.E. - FAN, ETC. WHERE IT IS NOT OBVIOUS WHAT IT CONTROLS.
      II. IDENTIFICATION SHALL INDICATE DEVICES CONTROLLED (I.E. "SUPPLY FAN SF-8-1", "SUPPLY FAN SF-8-2", ETC.)

OVERCURRENT PROTECTION DEVICES

1. CIRCUIT BREAKERS SHALL BE ELECTROMECHANICAL (THERMAL MAGNETIC) TRIP TYPE.
2. FUSES SHALL BE PERMITTED FOR THE FOLLOWING CIRCUIT TYPES:
   D. MOTOR CIRCUITS
      I. IN SEPARATELY MOUNTED COMBINATION MOTOR STARTERS.
      II. IN SWITCHES USED AS LOCATION DISCONNECTS FOR MOTORS OR HERMETIC COMPRESSORS.
   B. CONTROL CIRCUITS OR FOR PROTECTION OF CONTROL POWER TRANSFORMERS.
   C. CLASS J FUSES SHALL NOT BE SPECIFIED FOR MOTOR PROTECTION.
3. FUSE SCHEDULE:
   A. MOTOR CIRCUITS - CLASS RK-5, TIME DELAY
   B. CONTROL CIRCUITS - CLASS CC, FAST ACTING
   C. GENERAL FEEDER PROTECTION - CLASS RK-1, TIME DELAY

LIGHTING FIXTURES

1. FURNISH AND INSTALL NEW LIGHTING FIXTURES AS INDICATED ON DRAWINGS. ALL NEW LIGHTING FIXTURES SHALL BE INSTALLED IN ACCORDANCE WITH MANUFACTURER'S RECOMMENDATIONS AND THE N.E.C.

2. RECESSED LIGHT FIXTURES INSTALLED IN ACCESSIBLE CEILINGS SHALL BE CONNECTED BY MEANS OF A FLEXIBLE CONDUIT WHICH IS ATTACHED TO A 4" SQUARE JUNCTION BOX. BOX MAY SERVE MORE THAN ONE FIXTURE.

3. PROVIDE LIGHTING FIXTURE SUPPORTS AS RECOMMENDED BY THE CEILING AND LIGHTING FIXTURE MANUFACTURERS. LIGHTING FIXTURES DESIGNED FOR LAY-IN PANEL CEILINGS SHALL BE ATTACHED TO CEILING GRIDS WITH STANDARD CEILING GRID ACCESSORIES. SUPPORT WIRES FOR LIGHTING FIXTURES SHALL COMPLY WITH THE UBC.

LOW VOLTAGE LIGHTING CONTROL SYSTEM

1. ALL LIGHTING CONTROL DEVICES SHALL BE WHITE.

2. EQUIPMENT AND WIRING SHALL BE AS REQUIRED BY THE MANUFACTURER, NLIGHT.

3. AFTER THE SYSTEM HAS BEEN COMPLETED, TESTED AND IS OPERATING PROPERLY, THE MANUFACTURER'S REPRESENTATIVE SHALL DEMONSTRATE BY ACTUAL USAGE, THE PROPER OPERATION OF EACH SYSTEM DEVICE AND FUNCTION IN THE PRESENCE OF THE OWNER'S REPRESENTATIVE.

PROFESSIONAL ENGINEER
LICENSED
STATE OF IDAHO
JOHN JOSEPH CUNNINGHAM

MW Engineers
601 W Front Ave, Ste 1200
Spokane, WA 99201, USA
mwengineers.com

TRAVERS PARK PLAYGROUND & SPLASH PAD CONSTRUCTION

DATE

REVISIONS

#

SPECIFICATIONS - ELECTRICAL

DWN BY: NBH
CHK BY: DJC
SCALE: 12" = 1'-0"
DATE: 05/01/24

E02

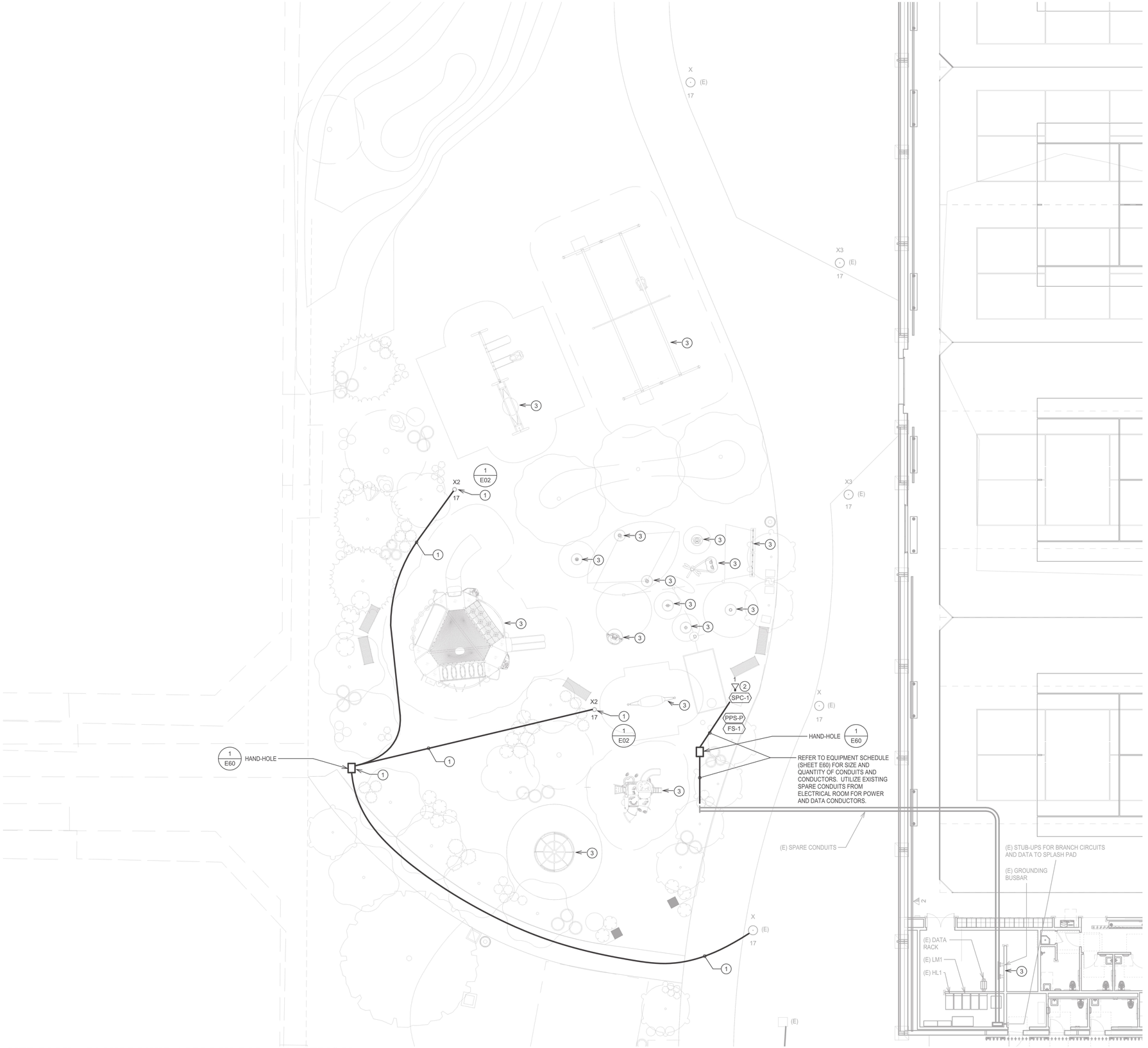

SITE PLAN - PLAYGROUND / SPLASH PAD - ELECTRICAL

1" = 10'-0"

GENERAL NOTES:

1. LOCATIONS AND DIMENSIONS SHOWN ARE APPROXIMATE. FIELD VERIFICATION AND MEASUREMENTS ARE REQUIRED PRIOR TO WORK.
2. ALTERNATE #2: SPLASH PAD IRRIGATION BOOSTER PUMP

   BASE BID: FURNISH AND INSTALL BASE BID SPLASH PAD ELEMENTS, CONTROLLER, CONCRETE, STORAGE TANK AND ASSOCIATED PIPING. CONNECT STORAGE TANK TO STORM DRAINAGE SYSTEM. SEE DRAWINGS, DETAILS, AND SPECIFICATIONS.

   ALTERNATE: FURNISH AND INSTALL SPLASH PAD IRRIGATION PUMP STATION, WET WELL, PIPING, CONNECTION TO TANK AND ELECTRICAL SERVICE. CONNECT IRRIGATION PUMP SUPPLY TO IRRIGATION SYSTEM. SEE DRAWINGS, DETAILS, AND SPECIFICATIONS.
3. ALTERNATE #9: LIGHTS AND BASES

   BASE BID: INSTALL ELECTRICAL CONDUIT TO LIGHT LOCATIONS. SEE DRAWINGS, DETAILS, AND SPECIFICATIONS.

   ALTERNATE: FURNISH AND INSTALL LIGHTS, WIRING AND ALL REQUIRED ELECTRICAL CONNECTIONS FOR LIGHTS INDICATED ON PLANS. SEE DRAWINGS, DETAILS, AND SPECIFICATIONS.

(#) KEYNOTES:

1. PROVIDE TIE-IN TO EXISTING LIGHTING CIRCUIT. NEW LIGHTING TO BE CONTROLLED WITH THE EXISTING SITE LIGHTING. ROUTE UNDERGROUND LIGHTING CONDUIT VIA ROUTE SHOWN. THIS IS A COORDINATED ROUTE. VERIFY EXACT LIGHTING LOCATIONS PRIOR TO INSTALLATION. REFER TO LANDSCAPE ARCHITECTURAL PLANS AND SPECIFICATIONS FOR FURTHER DETAILS.
2. PROVIDE (1) CAT-6 CABLE FOR NETWORK CONNECTION TO EXISTING DATA NETWORK FOR REPORTING.
3. PROVIDE ALL NEC 680 GROUNDING AND BONDING TERMINATIONS AT EQUIPMENT IN THE SPLASH PAD AREAS. PROVIDE #8AWG(CU) FROM GROUNDED AND BONDED EQUIPMENT BACK TO EXISTING BUILDING GROUNDING BUSBAR. EXISTING GROUNDING BUSBAR LOCATION IS IDENTIFIED ON THIS SHEET.

PROFESSIONAL ENGINEER
LICENSED
STATE OF IDAHO
RYAN JOSEPH CUNNINGHAM

MW Engineers
601 W Front Ave, Ste 1200
Spokane, WA 99201, USA
mwengineers.com

TRAVERS PARK PLAYGROUND & SPLASH PAD CONSTRUCTION

#	REVISIONS	DATE

SITE PLAN - ELECTRICAL

DWN BY:	NBH
CHK BY:	DJC
SCALE:	1" = 10'-0"
DATE:	05/01/24

E10

COPPER FEEDER SCHEDULE

AMPACITY (AMPS)	FEEDER WITH NEUTRAL					FEEDER WITH 200% NEUTRAL AND ISOLATED GROUND					FEEDER WITHOUT NEUTRAL				
	FEEDER NUMBER	NUMBER OF SETS	CONDUIT (INCHES)	CONDUCTOR	GROUND	FEEDER NUMBER	NUMBER OF SETS	CONDUIT (INCHES)	CONDUCTOR	GROUND	FEEDER NUMBER	NUMBER OF SETS	CONDUIT (INCHES)	CONDUCTOR	GROUND
20	20N	1	3/4	4#12	#12	20K	1	3/4	3#12+#8	2#12	20	1	3/4	3#12	#12
30	30N	1	3/4	4#10	#10	30K	1	1	3#8+#4	2#10	30	1	3/4	3#10	#10
40	40N	1	1	4#8	#10	40K	1	1	3#8+#3	2#10	40	1	1	3#8	#10
50	50N	1	1	4#6	#8	50K	1	1 1/4	3#6+#1	2#8	50	1	1	3#6	#8
60	60N	1	1 1/4	4#4	#8	60K	1	1 1/4	3#4+#1	2#8	60	1	1 1/4	3#4	#8
70	70N	1	1 1/4	4#4	#8	70K	1	1 1/2	3#3+#1/0	2#8	70	1	1 1/4	3#4	#8
80	80N	1	1 1/2	4#3	#8	80K	1	1 1/2	3#3+#2/0	2#8	80	1	1 1/4	3#3	#8
90	90N	1	1 1/2	4#2	#8	90K	1	1 1/2	3#2+#3/0	2#8	90	1	1 1/4	3#2	#8
100	100N	1	2	4#1	#6	100K	1	2	3#1+#3/0	2#6	100	1	1 1/2	3#1	#6
125	125N	1	2	4#1	#6	125K	1	2 1/2	5#2/0	2#4	125	1	1 1/2	3#1	#6
150	150N	1	2	4#1/0	#6	150K	1	2 1/2	5#3/0	2#4	150	1	2	3#1/0	#6
175	175N	1	2	4#2/0	#4	175K	1	2 1/2	5#4/0	2#2	175	1	2	3#2/0	#4
200	200N	1	2 1/2	4#3/0	#4	200K	1	3	5#250	2#2	200	1	2	3#3/0	#4
225	225N	1	2 1/2	4#4/0	#2	225K	1	3	5#300	2#2	225	1	2 1/2	3#4/0	#2
250	250N	1	3	4#250	#2	250K	1	4	5#400	2#1/0	250	1	3	3#250	#2
300	300N	1	4	4#350	#2	300K	1	4	5#500	2#1/0	300	1	3	3#350	#2
350	350N	1	4	4#500	#1/0	350K	2	2 1/2	5#4/0	2#2/0	350	1	4	3#500	#1/0
400	400N	1	4	4#600	#1/0	400K	2	3	5#250	2#2/0	400	1	4	3#600	#1/0
450	450N	2	2 1/2	4#4/0	#2/0	450K	2	3	5#300	2#2/0	450	2	2 1/2	3#4/0	#2/0
500	500N	2	3	4#250	#2/0	500K	2	4	5#400	2#2/0	500	2	3	3#250	#2/0
600	600N	2	4	4#350	#2/0	600K	2	4	5#500	2#3/0	600	2	3	3#350	#2/0
700	700N	2	4	4#500	#3/0	700K	4	2 1/2	5#4/0	2#3/0	700	2	4	3#500	#3/0
800	800N	2	4	4#600	#3/0	800K	4	3	5#250	2#3/0	800	2	4	3#600	#3/0
1000	1000N	3	4	4#400	#3/0	1000K	4	4	5#400	2#3/0	1000	3	3	3#400	#3/0
1200	1200N	4	4	4#350	#3/0	1200K	4	4	5#500	2#3/0	1200	4	3	3#350	#3/0
1600	1600N	4	4	4#600	#4/0	1600K	8	3	5#250	2#4/0	1600	4	4	3#600	#4/0
2000	2000N	5	4	4#600	#250	2000K	8	4	5#400	2#250	2000	5	4	3#600	#250
2500	2500N	6	4	4#600	#350	2500K	10	4	5#400	2#350	2500	6	4	3#600	#350
3000	3000N	8	4	4#500	#400	3000K	10	4	5#500	2#400	3000	8	4	3#500	#400
4000	4000N	10	4	4#600	#500	4000K	16	4	5#400	2#500	4000	10	4	3#600	#500

NOTES:

1. CONDUIT SIZES ARE BASED ON THWN INSULATION FOR ALL CONDUCTORS AND RGS CONDUIT.

ALUMINUM FEEDER SCHEDULE

AMPACITY (AMPS)	FEEDER WITH NEURTAL					FEEDER WITH 200% NEURTRAL AND ISOLATED GROUND					FEEDER WITHOUT NEUTRAL				
	FEEDER NUMBER	NUMBER OF SETS	CONDUIT (INCHES)	CONDUCTOR	GROUND (COPPER)	FEEDER NUMBER	NUMBER OF SETS	CONDUIT (INCHES)	CONDUCTOR	CU GROUND	FEEDER NUMBER	NUMBER OF SETS	CONDUIT (INCHES)	CONDUCTOR	CU GROUND
20															
30															
40															
50															
60															
70															
80															
90															
100	100N	1	2	4#2/0	#6						100	1	2	3#2/0	#6
125	125N	1	2	4#2/0	#6						125	1	2	3#2/0	#6
150	150N	1	2	4#3/0	#6						150	1	2	3#3/0	#6
175	175N	1	2-1/2	4#4/0	#4						175	1	2-1/2	3#4/0	#4
200	200N	1	2-1/2	4#250	#4						200	1	2-1/2	3#250	#4
225	225N	1	3	4#300	#2						225	1	3	3#300	#2
250	250N	1	3	4#400	#2						250	1	3	3#400	#2
300	300N	1	3-1/2	4#500	#2						300	1	3-1/2	3#500	#2
350	350N	2	2-1/2	4#4/0	#2						350	2	2-1/2	3#4/0	#1/0
400	400N	2	2-1/2	4#250	#2						400	2	2-1/2	3#250	#1/0
450	450N	2	3	4#300	#1/0						450	2	3	3#300	#1/0
500	500N	2	3	4#400	#1/0						500	2	3	3#400	#1/0
600	600N	2	3-1/2	4#500	#1/0						600	2	3-1/2	3#500	#2/0
700	700N	3	2-1/2	4#350	#2/0						700	3	2-1/2	3#350	#2/0
800	800N	3	3	4#400	#2/0						800	3	3	3#400	#2/0
1000	1000N	3	4	4#600	#3/0						1000	3	4	3#600	#3/0
1200	1200N	4	4	4#500	#3/0						1200	4	4	3#500	#3/0
1600	1600N	5	4	4#600	#4/0						1600	5	4	3#600	#4/0
2000	2000N	7	4	4#500	#250						2000	7	4	3#500	#250
2500	2500N	8	4	4#600	#350						2500	8	4	3#600	#350
3000	3000N	9	4	4#600	#400						3000	9	4	3#600	#400
4000	4000N	12	4	4#600	#500						4000	12	4	3#600	#500

NOTES:

1. CONDUIT SIZES ARE BASED ON THWN INSULATION FOR ALL CONDUCTORS AND RGS CONDUIT.
2. FEEDERS ARE "EQUIVALENT" BASED UPON ALUMINUM CONDUCTORS. NOT PERMITTED FOR CONNECTIONS TO VIBRATING OR MECHANICAL EQUIPMENT.
3. ALL GROUNDS SHALL BE COPPER UNLESS SPECIFICALLY NOTED OTHERWISE. SEE SPECS FOR DETAILS.
4. FAULT CURRENT CALCULATIONS TO BE BASED ON ACTUAL INSTALLED CONDUCTOR.
5. ALL CONDUITS ARE COPPER FOR FEEDERS LESS THAN 100A, UNLESS SPECIFICALLY NOTED OTHERWISE.
6. FOR FEEDERS EQUAL TO OR GREATER THAN 100A, ALUMINUM CONDUCTORS MAY BE UTILIZED AT THE CONTRACTORS DISCRETION.
7. WHERE CONDUIT SIZES/QUANTITIES ARE SHOWN, THEY ARE BASED ON COPPER CONDUCTORS, THE CONTRACTOR SHALL ADJUST AS NECESSARY WHERE ALUMINUM CONDUCTORS ARE USED.

GENERAL NOTES:

1. WHERE SHOWN, SHORT CIRCUIT CALCULATIONS ARE PRESENTED FOR THE REVIEW AUTHORITY AND SHALL NOT BE INTERPRETED TO MODIFY PANEL RATINGS. ALL PANEL RATINGS SHALL BE AT MINIMUM THE VALUES INDICATED IN THE PROJECT DOCUMENTS.
2. THIS PROJECT REQUIRES A POWER SYSTEM STUDY. SEE 26 05 73. ALL ELECTRICAL EQUIPMENT SUBMITTALS WHICH INCLUDE OVERCURRENT DEVICES WILL BE REJECTED UNTIL THE PRELIMINARY POWER SYSTEMS STUDY HAS BEEN RECEIVED.
3. ALL EQUIPMENT IS TO BE FULLY RATED. SERIES RATINGS ARE NOT ALLOWED.

(#) KEY NOTES:

1. REFER TO E101 - LEVEL 1 FLOOR PLAN FOR ROUTING AND STUB-OUT LOCATION AND SIZES.
2. PROVIDE MAIN BREAKER SET TO 600A, BUT ADJUSTABLE OR REPLACABLE TO 800A.

Branch Panel: MSB (E)

Location: STOR-1 A108-1
Supply From: UTILITY
Mounting: SURFACE
Enclosure: NEMA 1

Volts: 480/277 Wye
Phases: 3
Wires: 4

A.I.C. Rating: SEE FAULT TABLE
Bus Rating: 800 A
Mains: 3P-600A

CKT	Amp	ø	Cat	Notes	Load Name	A	B	C	A	B	C	Load Name	Notes	Cat	ø	Amp	CKT
1	250	3	HV...		TX-LDB	25845			78150			HVAC CU-1 (FUTURE)		HV...	3	400	2
3	--	--	--	--	--		25005			78150		--	--	--	--	--	4
5	--	--	--	--	--			21329			78150	--	--	--	--	--	6
7	400	3	HV...		HM1	35884			0			FUTURE EXPANSION	--	--	3	400	8
9	--	--	--	--	--		35884			0		--	--	--	--	--	10
11	--	--	--	--	--			31896			0	--	--	--	--	--	12
13	100	3	Lig...		HL1	14440			0			FUTURE CONCESSIONS BLDG	--	--	3	400	14
15	--	--	--	--	--		15038			0		--	--	--	--	--	16
17	--	--	--	--	--			13279			0	--	--	--	--	--	18
19	60	3	--	--	SPD	0			0			Spare	--	--	3	200	20
21	--	--	--	--	--		0			0		--	--	--	--	--	22
23	--	--	--	--	--			0			0	--	--	--	--	--	24
25																	26
27																	28
29																	30
31																	32
33																	34
35																	36
37																	38
39																	40
41																	42
						153820 VA			153397 VA			144287 VA					
						560 A			559 A			521 A					

Load Classification	Connected Load	Demand Factor	Estimated Demand	Panel Totals	
Equipment	500 VA	100.00%	500 VA		
HVAC	366894 VA	100.00%	366894 VA	**Total Conn. Load:**	451501 VA
Lighting	42739 VA	125.00%	53423 VA	**Total Est. Demand:**	461324 VA
Miscellaneous	14768 VA	100.00%	14768 VA	**Total Conn. Current:**	543 A
Motor	13552 VA	113.05%	15320 VA	**Total Est. Demand Current:**	555 A
Receptacle	14580 VA	84.29%	12290 VA		

General Notes:
1. PROVIDE MAIN BREAKER SET TO 600-AMPS, BUT ADJUSTABLE OR REPLACABLE TO 800-AMPS.

Circuit Notes:

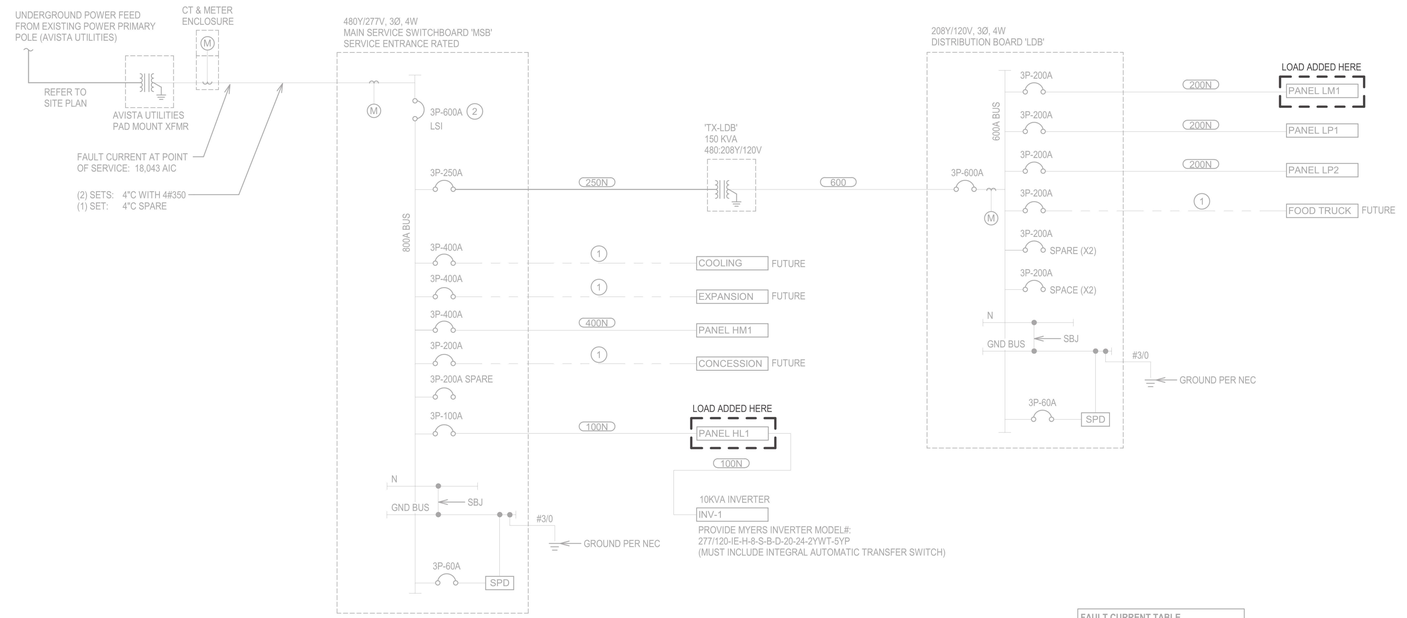

FAULT CURRENT TABLE

PANEL NAME	PANEL SCCR	CALCULATED FAULT CURRENT
MSB	25,000 AIC	15,940 AIC
HM1	25,000 AIC	15,743 AIC
HL1	25,000 AIC	15,509 AIC
LDB	22,000 AIC	12,391 AIC
LM1	22,000 AIC	11,995 AIC
LP1	22,000 AIC	11,995 AIC
LP2	22,000 AIC	11,995 AIC

(1) POWER ONE-LINE - SPLASH PAD

N.T.S.

PROFESSIONAL ENGINEER LICENSED STATE OF IDAHO JOSEPH CUNNINGHAM

MW Engineers
601 W Front Ave, Ste 1200
Spokane, WA 99201, USA
mwengineers.com

TRAVERS PARK
PLAYGROUND & SPLASH
PAD CONSTRUCTION

DATE
REVISIONS
#

ONELINE DIAGRAMS - ELECTRICAL

DWN BY: NBH
CHK BY: DJC
SCALE: 12" = 1'-0"
DATE: 05/01/24

E50

Branch Panel: HL1 (E)

Location: STOR-1 A108-1
Supply From: MSB
Mounting: Surface
Enclosure: Type 1

Volts: 480/277 Wye
Phases: 3
Wires: 4

A.I.C. Rating: SEE FAULT TABLE
Bus Rating: 250 A
Mains: MLO

CKT	Amp	ø	Cat	Notes	Load Name	A	B	C	A	B	C	Load Name	Notes	Cat	ø	Amp	CKT
1	100	3	Po...		INV-1	0			0			Spare	--	--	1	20	2
3	--	--	--	--	--		0			0		Spare	--	--	1	20	4
5	--	--	--	--	--			0			0	Spare	--	--	1	20	6
7	20	1	--	--	Spare	0			1860			Lighting Courts (Grids 4-5)		Lig...	1	20	8
9	20	1	--	--	Spare		0			2476		Lighting Courts (Grids 5-6)		Lig...	1	20	10
11	20	1	--	--	Spare			0			3714	Lighting Courts (Grids 6-8)		Lig...	1	20	12
13	20	1	Lig...		EM Lighting Room A112, A105, A104, A113,...	537			3714			Lighting Courts (Grids 8-10)		Lig...	1	20	14
15	20	1	Lig...		EM Lighting Room A102, A101		1921				3714	Lighting Courts (Grids 10-12)		Lig...	1	20	16
17	20	1	Lig...		EM Lighting South, West, and North Walkways			500			3714	Lighting Courts (Grids 12-14)		Lig...	1	20	18
19	20	1	Lig...		EM Lighting Courts (Grids 1-3)	1354					3714	Lighting Courts (Grids 14-16)		Lig...	1	20	20
21	20	1	Lig...		EM Lighting Courts (Grids 3-5)		3098			1860		Lighting Courts (Grids 16-17)		Lig...	1	20	22
23	20	1	Lig...		EM Lighting Courts (Grids 6-9)			2476			2992	Lighting SKATE PARK		Lig...	1	20	24
25	20	1	Lig...		EM Lighting Courts (Grids10-13)	2476			1870			Lighting SKATE PARK		Lig...	1	20	26
27	20	1	Lig...		EM Lighting Courts (Grids 14-17)		3098			0		Spare	--	--	1	20	28
29	20	1	--	--	Spare			0			0	Spare	--	--	1	20	30
31	20	1	--	--	Spare	0			0			Spare	--	--	1	20	32
33	20	1	--	--	Spare		0			0		Spare	--	--	1	20	34
35	20	1	--	--	Spare			0			0	Spare	--	--	1	20	36
37	20	1	--	--	Spare	0			0			Spare	--	--	1	20	38
39	20	1	--	--	Spare		0			0		Spare	--	--	1	20	40
41	20	1	--	--	Spare			0			0	Spare	--	--	1	20	42
						14440 VA		15038 VA			13279 VA						
						53 A		55 A			48 A						

ADDED LOAD

Load Classification	Connected Load	Demand Factor	Estimated Demand	Panel Totals	
Lighting	42739 VA	125.00%	53423 VA		
				Total Conn. Load:	42739 VA
				Total Est. Demand:	53423 VA
				Total Conn. Current:	51 A
				Total Est. Demand Current:	64 A

General Notes:

Circuit Notes:

Branch Panel: LM1 (E)

Location: STOR-1 A108-1
Supply From: LDB
Mounting: Surface
Enclosure: Type 1

Volts: 120/208 Wye
Phases: 3
Wires: 4

A.I.C. Rating: SEE FAULT TABLE
Bus Rating: 225 A
Mains: MLO

CKT	Amp	ø	Cat	Notes	Load Name	A	B	C	A	B	C	Load Name	Notes	Cat	ø	Amp	CKT
1	20	2	HV...		HVAC CF-1	915			3026			HVAC HP-1		HV...	2	60	2
3	--	--	--	--	--		915			3026		--	--	--	--	--	4
5	20	2	HV...		HVAC CF-2			915			1264	HVAC ERV-1		HV...	2	20	6
7	--	--	--	--	--	915			1264			--	--	--	--	--	8
9	20	2	HV...		HVAC CF-3		915			1170		HVAC AHU-2		HV...	2	20	10
11	--	--	--	--	--			915			1170	--	--	--	--	--	12
13	20	2	HV...		HVAC CF-4	915			0			Spare	--	--	2	20	14
15	--	--	--	--	--		915			0		--	--	--	--	--	16
17	20	2	HV...		HVAC CF-5			915			478	HVAC RISER A110 HWRP-1		HV...	2	20	18
19	--	--	--	--	--	915			478			--	--	--	--	--	20
21	20	2	HV...		HVAC CF-6		915			456		HVAC COURTS A103 DF-1		HV...	1	20	22
23	--	--	--	--	--			915			1801	HVAC RISER A110 AC-1		HV...	3	20	24
25	60	2	Motor	1	Motor PPS -P	3536			801			--	--	--	--	--	26
27	--	--	--	--	--		3536			1801		--	--	--	--	--	28
29	20	2	Mis...	1	Miscellaneous SPC-1			520			0	Spare	--	--	1	20	30
31	--	--	--	--	--	520			0			Spare	--	--	1	20	32
33	20	1	Mis...	1	Miscellaneous FS-1		240			0		Spare	--	--	1	20	34
35	20	1	--	--	Spare			0			0	Spare	--	--	1	20	36
37	20	1	--	--	Spare	0			0			Spare	--	--	1	20	38
39	20	1	--	--	Spare		0			0		Spare	--	--	1	20	40
41	20	1	--	--	Spare			0			0	Spare	--	--	1	20	42
						14287 VA		13891 VA			8894 VA						
						125 A		122 A			74 A						

ADDED LOAD

Load Classification	Connected Load	Demand Factor	Estimated Demand	Panel Totals	
HVAC	28719 VA	100.00%	28719 VA		
Miscellaneous	1280 VA	100.00%	1280 VA	**Total Conn. Load:**	37071 VA
Motor	7072 VA	125.00%	8840 VA	**Total Est. Demand:**	38839 VA
				Total Conn. Current:	103 A
				Total Est. Demand Current:	108 A

General Notes:

Circuit Notes:

1. PROVIDE GFCI BREAKER FOR SPLASH PAD CIRCUIT.

NOTES:
1. Contractor shall verify ceiling type prior to ordering. Supply appropriate mounting hardware.
2. Fixture may require chain and/or unistrut for mounting.
3. Bottom of fixture shall hang down 4'-3" from structure. Mounting points shall land on purlins.
4. Center fixture horizontally over mirror. See architectural elevations for mounting height.
5. Wall mount fixture at 9'-0" AFF on center.
6. Bottom of fixture shall hang at 20'-0" AFF.
7. Provide flush mount concrete pole base.
8. Locate remote driver in discreet but acessible location.
9. Locate fixture just below building signage and aim fixture up and back towards lettering.
10. Lights shall be upgraded to LED and located on existing poles.
11. All conduit shall be concealed on top of roof sheathing.

LIGHTING FIXTURE SCHEDULE - SPLASH PAD - ALTERNATE #9

Type	Description	Lamp	VA	Ballast Voltage	Manufacturer	Model #	Notes
X2	Illuminated Bollard	LED	10 VA	277 V	Bega	77753-K4-FINISH BY ARCHITECT	7

GENERAL EQUIPMENT SCHEDULE - ELECTRICAL - SPLASH PAD

EQUIPMENT SPECIFIC NOTES:
1. INDICATED HEIGHTS ARE FOR REFERENCE ONLY. REFER TO AV AND ARCHITECTURAL DRAWINGS FOR FINAL EQUIPMENT HEIGHTS AND LOCATIONS.
2. DIVISION 26 SHALL PROVIDE AND INSTALL ELECTRICAL PROVISIONS AS SCHEDULED.

Equipment Name	Description	Voltage	Phase	HP	Amps	kVA	Starter	Disconnect	Fuse Size	# of Sets	Conduit Size	Wire Size/Qty (AWG)	Panel	Circuit Number	Notes
FS-1	FLOAT SWITCH	120 V	1	--	2 A	0.240 kVA	--	--	--	1	1"	2#12+1#12G	LM1	33	
PPS-P	PPS ATLAS PUMP (SUBMERSED)	208 V	1	5 HP	34 A	7.072 kVA	--	2P-60A	50A	1	2"	3#4+1#8G	LM1	25,27	
SPC-1	SPLASH PAD CONTROLLER	208 V	1	--	5 A	1.040 kVA	--	2P-30A	15A	1	1"	3#10+1#10G	LM1	29,31	

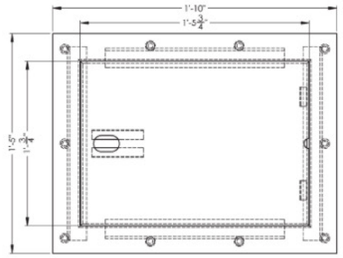

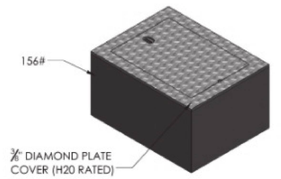

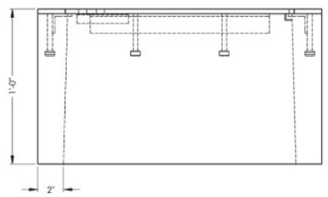

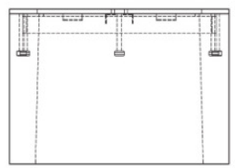

REINFORCEMENT:

1. 7 GA WELDED WIRE MESH
2. 3/8 NELSON STUDS
3. PENTA BOLT LOCKING

1 HAND-HOLE
N.T.S.

PROFESSIONAL ENGINEER
LICENSED
STATE OF IDAHO
JOSEPH CUNNINGHAM

MW Engineers
601 W Bannock St, Ste 1000
Boise, Idaho 83702, 99201, USA
mwengineers.com

TRAVERS PARK
PLAYGROUND & SPLASH
PAD CONSTRUCTION

#	REVISIONS	DATE

SCHEDULES & DETAILS - ELECTRICAL

DWN BY: NBH
CHK BY: DJC
SCALE: 12" = 1'-0"
DATE: 05/01/24

E60

BID FORM FOR CONSTRUCTION CONTRACT

The terms used in this Bid with initial capital letters have the meanings stated in the Instructions to Bidders, the General Conditions, and the Supplementary Conditions.

ARTICLE 1—OWNER AND BIDDER

1.01 This Bid is submitted to:

City of Sandpoint
City Clerk
1123 Lake Street
Sandpoint, ID 83864

1.02 The undersigned Bidder proposes and agrees, if this Bid is accepted, to enter into an Agreement with Owner in the form included in the Bidding Documents to perform all Work as specified or indicated in the Bidding Documents for the prices and within the times indicated in this Bid and in accordance with the other terms and conditions of the Bidding Documents.

ARTICLE 2—ATTACHMENTS TO THIS BID

2.01 The following documents are submitted with and made a condition of this Bid:

A. Required Bid security in the form of: cash, a certified check, cashier's check, or a Bid bond (on the form attached) issued by a surety meeting the requirements of the General Conditions.;

B. Bidder shall include in his Bid the name, or names and address, or addresses, and Idaho Public Works Contractor License Numbers of the Subcontractors who shall, in the event the Bidder secures the Contract, subcontract the plumbing, heating and air-conditioning work, and electrical work under the General Contract;

C. State of Idaho Public Works Contractor's License No.: PWC-C-14560-U-3-5;

ARTICLE 3—BID FORM

3.01 BASE BID AND ALTERNATES

A. Bidder will perform the following Work at the indicated unit prices:

BID SCHEDULE A – BASE BID: AS INDICATED ON THE DRAWINGS AND SPECIFICATIONS

Item No.	Description	Unit	Estimated Quantity	Bid Price
1	Mobilization	LS	1	$ 6,000.00
2	Clearing and Grubbing	LS	1	$ 23,000.00
3	Temporary Facilities and Controls, Tree Protection	LS	1	$ 6,000.00

4	Site Work, Grading, Utilities, Earthwork, Site Prep, Site Drainage, Structures, and Chain Link Fence	LS	1	$ 195,000.00
5	Electrical: including but not limited to connection to splash pad controller and conduit.	LS	1	$ 23,000.00
6	Hardscape: concrete, walks, splash pad, play area curbs	LS	1	$ 128,000.00
7	Asphalt Paving: includes subgrade, base and paving	LS	1	$ 12,000.00
8	Playground Equipment Installation	LS	1	$ 63,000.00
9	Playground Protective Surfacing including base rock and preparation	LS	1	$ 322,000.00
10	Irrigation, Soil Preparation, Planting and Irrigation	LS	1	$ 88,000.00
11	Closeout	LS	1	$ 3,000.00
12	Bonding and Permitting	LS	1	$ 12,000.00
	TOTAL OF BID SCHEDULE A			$ 881,000.00

BID SCHEDULE B – ADDITIVE ALTERNATIVES (SEE DRAWINGS AND SPECIFICATIONS FOR ADDITIONAL INFORMATION).

Item No.	Description	Unit	Estimated Quantity	Bid Price
1	Additional Splash Pad Elements	LS	1	$ 34,000.00
2	Splash Pad Irrigation Booster Pump	LS	1	$ 70,000.00
3	North Hill – Berm, Asphalt Path, Plaza, and installation of Owner Furnished / Contractor Installed Freenotes Harmony Park Butterfly Elements.	LS	1	$ 15,000.00

4	North Hill Embankment Boulder Construction, Slide (Owner Furnished/Contractor Installed) Installation, curb, and playground protective surfacing.	LS	1	$ 21,000.00
5	ID Sculpture Play Equipment Installation including footing (Owner Furnished, Contractor Installed)	LS	1	$ 14,000.00
6	Poured In Place Playground Safety Surfacing including base rock and preparation	LS	1	$ 13,000.00
7	Sodded Turf Grass	LS	1	$ 3,000.00
8	Concrete Paving	LS	1	$ 3,000.00
9	Lights, Bases and Electrical	LS	1	$ 6,000.00
	TOTAL OF BID SCHEDULE B			$ 179,000.00

SEE SECTION 012300 – ALTERNATES FOR ADDITIONAL INFORMATION.

B. Bidder acknowledges that:

1. Each Bid Price includes an amount considered by Bidder to be adequate to cover Contractor's overhead and profit for each separately identified item,
2. each Bid Unit Price includes all applicable taxes and fees, and
3. estimated quantities are not guaranteed and are solely for the purpose of comparison of Bids, and final payment for all Unit Price Work will be based on actual quantities, determined as provided in the Contract Documents.

ARTICLE 4—TIME OF COMPLETION

4.01 Bidder agrees that all items included in Base Bid and Additive Alternatives, if awarded, will be substantially complete and will be completed and ready for final payment in accordance with Paragraph 15.06 of the General Conditions on or before the dates or within the number of calendar days indicated in the Agreement.

4.02 Bidder accepts the provisions of the Agreement as to liquidated damages.

ARTICLE 5—BIDDER'S ACKNOWLEDGEMENTS: ACCEPTANCE PERIOD, INSTRUCTIONS, AND RECEIPT OF ADDENDA

5.01 *Bid Acceptance Period*

A. This Bid will remain subject to acceptance for 60 days after the Bid opening, or for such longer period of time that Bidder may agree to in writing upon request of Owner.

5.02 *Instructions to Bidders*

A. Bidder accepts all of the terms and conditions of the Instructions to Bidders, including without limitation those dealing with the disposition of Bid security.

5.03 *Receipt of Addenda*

A. Bidder hereby acknowledges receipt of the following Addenda:

Addendum Number	Addendum Date
NO. 1	5.15.2024
NO. 2	5.17.2024

ARTICLE 6—BIDDER'S REPRESENTATIONS AND CERTIFICATIONS

6.01 *Bidder's Representations*

A. In submitting this Bid, Bidder represents the following:

1. Bidder has examined and carefully studied the Bidding Documents, including Addenda.
2. Bidder has visited the Site, conducted a thorough visual examination of the Site and adjacent areas, and become familiar with the general, local, and Site conditions that may affect cost, progress, and performance of the Work.
3. Bidder is familiar with all Laws and Regulations that may affect cost, progress, and performance of the Work.
4. Bidder has carefully studied the drawings of physical conditions relating to existing surface or subsurface structures at the Site that have been identified in the Supplementary Conditions, with respect to the Technical Data in such drawings.
5. Bidder has carefully studied the reports and drawings relating to Hazardous Environmental Conditions, if any, at or adjacent to the Site that have been identified in the Supplementary Conditions, with respect to Technical Data in such reports and drawings.
6. Bidder has considered the information known to Bidder itself; information commonly known to contractors doing business in the locality of the Site; information and observations obtained from visits to the Site; the Bidding Documents; and the Technical Data identified in the Supplementary Conditions or by definition, with respect to the effect of such information, observations, and Technical Data on (a) the cost, progress, and performance of the Work; (b) the means, methods, techniques, sequences, and procedures of construction to be employed by Bidder, if selected as Contractor; and (c) Bidder's (Contractor's) safety precautions and programs.

7. Based on the information and observations referred to in the preceding paragraph, Bidder agrees that no further examinations, investigations, explorations, tests, studies, or data are necessary for the performance of the Work at the Contract Price, within the Contract Times, and in accordance with the other terms and conditions of the Contract.
8. Bidder is aware of the general nature of work to be performed by Owner and others at the Site that relates to the Work as indicated in the Bidding Documents.
9. Bidder has given Engineer written notice of all conflicts, errors, ambiguities, or discrepancies that Bidder has discovered in the Bidding Documents, and of discrepancies between Site conditions and the Contract Documents, and the written resolution thereof by Engineer is acceptable to Contractor.
10. The Bidding Documents are generally sufficient to indicate and convey understanding of all terms and conditions for performance and furnishing of the Work.
11. The submission of this Bid constitutes an incontrovertible representation by Bidder that without exception the Bid and all prices in the Bid are premised upon performing and furnishing the Work required by the Bidding Documents.

6.02 *Bidder's Certifications*

A. The Bidder certifies the following:

1. This Bid is genuine and not made in the interest of or on behalf of any undisclosed individual or entity and is not submitted in conformity with any collusive agreement or rules of any group, association, organization, or corporation.
2. Bidder has not directly or indirectly induced or solicited any other Bidder to submit a false or sham Bid.
3. Bidder has not solicited or induced any individual or entity to refrain from bidding.
4. Bidder has not engaged in corrupt, fraudulent, collusive, or coercive practices in competing for the Contract. For the purposes of this Paragraph 6.02.A:
    a. Corrupt practice means the offering, giving, receiving, or soliciting of anything of value likely to influence the action of a public official in the bidding process.
    b. Fraudulent practice means an intentional misrepresentation of facts made (a) to influence the bidding process to the detriment of Owner, (b) to establish bid prices at artificial non-competitive levels, or (c) to deprive Owner of the benefits of free and open competition.
    c. Collusive practice means a scheme or arrangement between two or more Bidders, with or without the knowledge of Owner, a purpose of which is to establish bid prices at artificial, non-competitive levels.
    d. Coercive practice means harming or threatening to harm, directly or indirectly, persons or their property to influence their participation in the bidding process or affect the execution of the Contract.

BID BOND (PENAL SUM FORM)

Bidder Name: Ginno Construction of Idaho, Inc. Address *(principal place of business)*: 3893 N Schreiber Way Coeur d' Alene, ID 83815	**Surety** Name: Fidelity and Deposit Company of Maryland Address *(principal place of business)*: 1299 Zurich Way, 5th Floor Schaumburg, IL 60196-1056
Owner Name: City of Sandpoint Address *(principal place of business)*: 1123 Lake Street Sandpoint, ID 83864	**Bid** 24-5300-2 TRAVERS PARK PLAYGROUND & SPLASH PAD CONSTRUCTION Bid Due Date: **May 22, 2024**
Bond Penal Sum: Five Percent of the Total Amount Bid (5%) Date of Bond: May 22, 2024	
Surety and Bidder, intending to be legally bound hereby, subject to the terms set forth in this Bid Bond, do each cause this Bid Bond to be duly executed by an authorized officer, agent, or representative.	
Bidder Ginno Construction of Idaho, Inc. *(Full formal name of Bidder)* By: 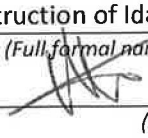 *(Signature)* Name: Rich Wells *(Printed or typed)* Title: President Attest: 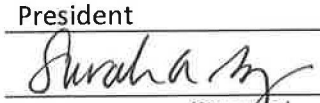 *(Signature)* Name: Sarah A. Priddy *(Printed or typed)* Title: Witness	Surety Fidelity and Deposit Company of Maryland *(Full formal name of Surety) (corporate seal)* By: 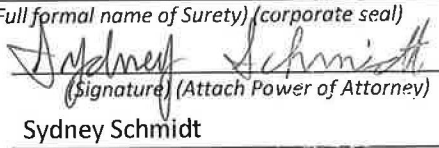 *(Signature) (Attach Power of Attorney)* Name: Sydney Schmidt *(Printed or typed)* Title: Attorney-in-Fact Attest: 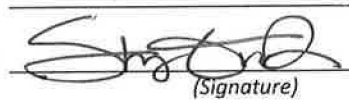 *(Signature)* Name: Shelby Groth *(Printed or typed)* Title: Witness
Notes: (1) Note: Addresses are to be used for giving any required notice. (2) Provide execution by any additional parties, such as joint venturers, if necessary.	

1. Bidder and Surety, jointly and severally, bind themselves, their heirs, executors, administrators, successors, and assigns to pay to Owner upon default of Bidder the penal sum set forth on the face of this Bond. Payment of the penal sum is the extent of Bidder's and Surety's liability. Recovery of such penal sum under the terms of this Bond will be Owner's sole and exclusive remedy upon default of Bidder.
2. Default of Bidder occurs upon the failure of Bidder to deliver within the time required by the Bidding Documents (or any extension thereof agreed to in writing by Owner) the executed Agreement required by the Bidding Documents and any performance and payment bonds required by the Bidding Documents.
3. This obligation will be null and void if:
   3.1. Owner accepts Bidder's Bid and Bidder delivers within the time required by the Bidding Documents (or any extension thereof agreed to in writing by Owner) the executed Agreement required by the Bidding Documents and any performance and payment bonds required by the Bidding Documents, or
   3.2. All Bids are rejected by Owner, or
   3.3. Owner fails to issue a Notice of Award to Bidder within the time specified in the Bidding Documents (or any extension thereof agreed to in writing by Bidder and, if applicable, consented to by Surety when required by Paragraph 5 hereof).
4. Payment under this Bond will be due and payable upon default of Bidder and within 30 calendar days after receipt by Bidder and Surety of written notice of default from Owner, which notice will be given with reasonable promptness, identifying this Bond and the Project and including a statement of the amount due.
5. Surety waives notice of any and all defenses based on or arising out of any time extension to issue Notice of Award agreed to in writing by Owner and Bidder, provided that the total time for issuing Notice of Award including extensions does not in the aggregate exceed 120 days from the Bid due date without Surety's written consent.
6. No suit or action will be commenced under this Bond prior to 30 calendar days after the notice of default required in Paragraph 4 above is received by Bidder and Surety, and in no case later than one year after the Bid due date.
7. Any suit or action under this Bond will be commenced only in a court of competent jurisdiction located in the state in which the Project is located.
8. Notices required hereunder must be in writing and sent to Bidder and Surety at their respective addresses shown on the face of this Bond. Such notices may be sent by personal delivery, commercial courier, or by United States Postal Service registered or certified mail, return receipt requested, postage pre-paid, and will be deemed to be effective upon receipt by the party concerned.
9. Surety shall cause to be attached to this Bond a current and effective Power of Attorney evidencing the authority of the officer, agent, or representative who executed this Bond on behalf of Surety to execute, seal, and deliver such Bond and bind the Surety thereby.
10. This Bond is intended to conform to all applicable statutory requirements. Any applicable requirement of any applicable statute that has been omitted from this Bond will be deemed to be included herein as if set forth at length. If any provision of this Bond conflicts with any applicable statute, then the provision of said statute governs and the remainder of this Bond that is not in conflict therewith continues in full force and effect.
11. The term "Bid" as used herein includes a Bid, offer, or proposal as applicable.

ZURICH AMERICAN INSURANCE COMPANY
COLONIAL AMERICAN CASUALTY AND SURETY COMPANY
FIDELITY AND DEPOSIT COMPANY OF MARYLAND
POWER OF ATTORNEY

KNOW ALL MEN BY THESE PRESENTS: That the ZURICH AMERICAN INSURANCE COMPANY, a corporation of the State of New York, the COLONIAL AMERICAN CASUALTY AND SURETY COMPANY, a corporation of the State of Illinois, and the FIDELITY AND DEPOSIT COMPANY OF MARYLAND a corporation of the State of Illinois (herein collectively called the "Companies"), by Robert D. Murray, Vice President, in pursuance of authority granted by Article V, Section 8, of the By-Laws of said Companies, which are set forth on the reverse side hereof and are hereby certified to be in full force and effect on the date hereof, do hereby nominate, constitute, and appoint H. Keith MCNALLY, Chris LARSON, Erin L. REPP, WM DINNEEN, Sydney SCHMIDT, Travis LONG, Shelby GROTH of Spokane, Washington, its true and lawful agent and Attorney-in-Fact, to make, execute, seal and deliver, for, and on its behalf as surety, and as its act and deed: **any and all bonds and undertakings,** and the execution of such bonds or undertakings in pursuance of these presents, shall be as binding upon said Companies, as fully and amply, to all intents and purposes, as if they had been duly executed and acknowledged by the regularly elected officers of the ZURICH AMERICAN INSURANCE COMPANY at its office in New York, New York., the regularly elected officers of the COLONIAL AMERICAN CASUALTY AND SURETY COMPANY at its office in Owings Mills, Maryland., and the regularly elected officers of the FIDELITY AND DEPOSIT COMPANY OF MARYLAND at its office in Owings Mills, Maryland., in their own proper persons.

The said Vice President does hereby certify that the extract set forth on the reverse side hereof is a true copy of Article V, Section 8, of the By-Laws of said Companies, and is now in force.

IN WITNESS WHEREOF, the said Vice-President has hereunto subscribed his/her names and affixed the Corporate Seals of the said **ZURICH AMERICAN INSURANCE COMPANY, COLONIAL AMERICAN CASUALTY AND SURETY COMPANY, and FIDELITY AND DEPOSIT COMPANY OF MARYLAND,** this 22nd day of November, A.D. 2023.

Colonial American Casualty and Surety Company CORPORATE SEAL
ZURICH AMERICAN INSURANCE COMPANY CORPORATE SEAL 1977 NEW YORK
Fidelity and Deposit Company of Maryland CORPORATE SEAL 1890

ATTEST:
ZURICH AMERICAN INSURANCE COMPANY
COLONIAL AMERICAN CASUALTY AND SURETY COMPANY
FIDELITY AND DEPOSIT COMPANY OF MARYLAND

By: Robert D. Murray
Vice President

By: Dawn E. Brown
Secretary

State of Maryland
County of Baltimore

On this 22nd day of November, A.D. 2023, before the subscriber, a Notary Public of the State of Maryland, duly commissioned and qualified, **Robert D. Murray, Vice President and Dawn E. Brown, Secretary** of the Companies, to me personally known to be the individuals and officers described in and who executed the preceding instrument, and acknowledged the execution of same, and being by me duly sworn, deposeth and saith, that he/she is the said officer of the Company aforesaid, and that the seals affixed to the preceding instrument are the Corporate Seals of said Companies, and that the said Corporate Seals and the signature as such officer were duly affixed and subscribed to the said instrument by the authority and direction of the said Corporations.

IN TESTIMONY WHEREOF, I have hereunto set my hand and affixed my Official Seal the day and year first above written.

Genevieve M. Maison

GENEVIEVE M. MAISON
NOTARY PUBLIC
BALTIMORE COUNTY, MD
My Commission Expires JANUARY 27, 2025

GENEVIEVE M. MAISON NOTARY PUBLIC BALTIMORE COUNTY, MD

Authenticity of this bond can be confirmed at bondvalidator.zurichna.com or 410-559-8790

EXTRACT FROM BY-LAWS OF THE COMPANIES

"Article V, Section 8, Attorneys-in-Fact. The Chief Executive Officer, the President, or any Executive Vice President or Vice President may, by written instrument under the attested corporate seal, appoint attorneys-in-fact with authority to execute bonds, policies, recognizances, stipulations, undertakings, or other like instruments on behalf of the Company, and may authorize any officer or any such attorney-in-fact to affix the corporate seal thereto; and may with or without cause modify of revoke any such appointment or authority at any time."

CERTIFICATE

I, the undersigned, Vice President of the ZURICH AMERICAN INSURANCE COMPANY, the COLONIAL AMERICAN CASUALTY AND SURETY COMPANY, and the FIDELITY AND DEPOSIT COMPANY OF MARYLAND, do hereby certify that the foregoing Power of Attorney is still in full force and effect on the date of this certificate; and I do further certify that Article V, Section 8, of the By-Laws of the Companies is still in force.

This Power of Attorney and Certificate may be signed by facsimile under and by authority of the following resolution of the Board of Directors of the ZURICH AMERICAN INSURANCE COMPANY at a meeting duly called and held on the 15th day of December 1998.

RESOLVED: "That the signature of the President or a Vice President and the attesting signature of a Secretary or an Assistant Secretary and the Seal of the Company may be affixed by facsimile on any Power of Attorney...Any such Power or any certificate thereof bearing such facsimile signature and seal shall be valid and binding on the Company."

This Power of Attorney and Certificate may be signed by facsimile under and by authority of the following resolution of the Board of Directors of the COLONIAL AMERICAN CASUALTY AND SURETY COMPANY at a meeting duly called and held on the 5th day of May, 1994, and the following resolution of the Board of Directors of the FIDELITY AND DEPOSIT COMPANY OF MARYLAND at a meeting duly called and held on the 10th day of May, 1990.

RESOLVED: "That the facsimile or mechanically reproduced seal of the company and facsimile or mechanically reproduced signature of any Vice-President, Secretary, or Assistant Secretary of the Company, whether made heretofore or hereafter, wherever appearing upon a certified copy of any power of attorney issued by the Company, shall be valid and binding upon the Company with the same force and effect as though manually affixed.

IN TESTIMONY WHEREOF, I have hereunto subscribed my name and affixed the corporate seals of the said Companies, this 22nd day of May, 2024.



Thomas O. McClellan
Vice President

TO REPORT A CLAIM WITH REGARD TO A SURETY BOND, PLEASE SUBMIT A COMPLETE DESCRIPTION OF THE CLAIM INCLUDING THE PRINCIPAL ON THE BOND, THE BOND NUMBER, AND YOUR CONTACT INFORMATION TO:

Zurich Surety Claims
1299 Zurich Way
Schaumburg, IL 60196-1056
reportsfclaims@zurichna.com
800-626-4577

Authenticity of this bond can be confirmed at bondvalidator.zurichna.com or 410-559-8790

Brad Little
Governor

State of Idaho

Division of Occupational and Professional Licenses

PUBLIC WORKS CONTRACTORS LICENSING

CONSTRUCTION MANAGER

012890
License Number

08/21/2014
Original License Issued

This is to certify that

C. RICHARD WELLS

has fulfilled the requirements of the law relating to licensing in Idaho Code, Title 54, Chapter 19 & 45 and is hereby granted this certificate.

This license expires: 08/31/2024

Licensee Signature

Russell Barron, Administrator

Naming of Subcontractors Form

Per Idaho Code, 67-2310, Bidder shall include in his or her Bid the names and address, and Idaho Public Works Contractor License Number of the Subcontractors who shall, in the event the Bidder secures the Contract, subcontract the plumbing, heating and air-conditioning work, and electrical work under the general Contract. Failure to name Subcontractors as required shall render any Bid submitted by the Bidder unresponsive and void.

Subcontractor Name and Address	Classification	License Number
KAESTNER ELECTRIC DALTON GARDENS, ID 83815	ELECT.	PWC-C-10718-AAA-4

NOTES TO USER

1. This form must be included for all bids.

BIDDER hereby submits this Bid as set forth above:

Bidder: Ginno Construction of Idaho, Inc.
(typed or printed name of organization)

By: _____
(individual's signature)

Name: Rich Wells
(typed or printed)

Title: President
(typed or printed)

Date: 5.22.24
(typed or printed)

If Bidder is a corporation, a partnership, or a joint venture, attach evidence of authority to sign.

Attest: _____
(individual's signature)

Name: Sarah A. Priddy
(typed or printed)

Title: Witness
(typed or printed)

Date: 5.22.24
(typed or printed)

Address for giving notices: 3893 N. Schreiber Way
Coeur d'Alene, ID 83815

Bidder's Contact:

Name: Kyle Wells
(typed or printed)

Title: Project Manager
(typed or printed)

Phone: 208.667.5560

Email: kyle@ginnoconstruction.com

Address: 3893 N. Schreiber Way
Coeur d'Alene, ID 83815

Bidder's Contractor License No.: (if applicable) RCE-1067

CERTIFICATE OF LIABILITY INSURANCE

DATE 6/10/2024

THIS CERTIFICATE IS ISSUED AS A MATTER OF INFORMATION ONLY AND CONFERS NO RIGHTS UPON THE CERTIFICATE HOLDER. THIS CERTIFICATE DOES NOT AFFIRMATIVELY OR NEGATIVELY AMEND, EXTEND OR ALTER THE COVERAGE AFFORDED BY THE POLICIES BELOW. THIS CERTIFICATE OF INSURANCE DOES NOT CONSTITUTE A CONTRACT BETWEEN THE ISSUING INSURER(S), AUTHORIZED REPRESENTATIVE OR PRODUCER, AND THE CERTIFICATE HOLDER.

IMPORTANT: If the certificate holder is an ADDITIONAL INSURED, the policy(ies) must have ADDITIONAL INSURED provisions or be endorsed. If SUBROGATION IS WAIVED, subject to the terms and conditions of the policy, certain policies may require an endorsement. A statement on this certificate does not confer rights to the certificate holder in lieu of such endorsement(s).

PRODUCER License # 121437 Associated Insurance Services PO Box 16410 Boise, ID 83715	CONTACT NAME: Sarah Herman PHONE (A/C, No, Ext): (208) 955-8182 FAX (A/C, No): (208) 336-1137 E-MAIL ADDRESS: sarahh@associatedins.com
	INSURER(S) AFFORDING COVERAGE — NAIC #
	INSURER A : Associated Loggers Exchange — 37370
INSURED Ginno Construction of Idaho, Inc. dba Ginno Construction Co 3893 N Schreiber Way Coeur d'Alene, ID 83815	INSURER B :
	INSURER C :
	INSURER D :
	INSURER E :
	INSURER F :

COVERAGES **CERTIFICATE NUMBER:** **REVISION NUMBER:**

THIS IS TO CERTIFY THAT THE POLICIES OF INSURANCE LISTED BELOW HAVE BEEN ISSUED TO THE INSURED NAMED ABOVE FOR THE POLICY PERIOD INDICATED. NOTWITHSTANDING ANY REQUIREMENT, TERM OR CONDITION OF ANY CONTRACT OR OTHER DOCUMENT WITH RESPECT TO WHICH THIS CERTIFICATE MAY BE ISSUED OR MAY PERTAIN, THE INSURANCE AFFORDED BY THE POLICIES DESCRIBED HEREIN IS SUBJECT TO ALL THE TERMS, EXCLUSIONS AND CONDITIONS OF SUCH POLICIES. LIMITS SHOWN MAY HAVE BEEN REDUCED BY PAID CLAIMS.

INSR LTR	TYPE OF INSURANCE	ADDL INSD	SUBR WVD	POLICY NUMBER	POLICY EFF (MM/DD/YYYY)	POLICY EXP (MM/DD/YYYY)	LIMITS	
	COMMERCIAL GENERAL LIABILITY						EACH OCCURRENCE	$
	☐ CLAIMS-MADE ☐ OCCUR						DAMAGE TO RENTED PREMISES (Ea occurrence)	$
							MED EXP (Any one person)	$
							PERSONAL & ADV INJURY	$
	GEN'L AGGREGATE LIMIT APPLIES PER:						GENERAL AGGREGATE	$
	☐ POLICY ☐ PRO-JECT ☐ LOC						PRODUCTS - COMP/OP AGG	$
	☐ OTHER:							$
	AUTOMOBILE LIABILITY						COMBINED SINGLE LIMIT (Ea accident)	$
	☐ ANY AUTO						BODILY INJURY (Per person)	$
	☐ OWNED AUTOS ONLY ☐ SCHEDULED AUTOS						BODILY INJURY (Per accident)	$
	☐ HIRED AUTOS ONLY ☐ NON-OWNED AUTOS ONLY						PROPERTY DAMAGE (Per accident)	$
								$
	☐ UMBRELLA LIAB ☐ OCCUR						EACH OCCURRENCE	$
	☐ EXCESS LIAB ☐ CLAIMS-MADE						AGGREGATE	$
	☐ DED ☐ RETENTION $							$
A	WORKERS COMPENSATION AND EMPLOYERS' LIABILITY ANY PROPRIETOR/PARTNER/EXECUTIVE OFFICER/MEMBER EXCLUDED? (Mandatory in NH) Y/N: N If yes, describe under DESCRIPTION OF OPERATIONS below	N / A	X	ALE6036-23	7/1/2023	7/1/2024	X PER STATUTE ☐ OTH-ER	
							E.L. EACH ACCIDENT	$ 1,000,000
							E.L. DISEASE - EA EMPLOYEE	$ 1,000,000
							E.L. DISEASE - POLICY LIMIT	$ 1,000,000

DESCRIPTION OF OPERATIONS / LOCATIONS / VEHICLES (ACORD 101, Additional Remarks Schedule, may be attached if more space is required)

State of Idaho Benefits
Elective Coverage: Yes for the Owners Kris Pereira, Rich Wells, Brian Longwell

Re: TRAVERS PARK PLAYGROUND & SPLASH PAD CONSTRUCTION

CERTIFICATE HOLDER

City of Sandpoint
City Clerk
1123 Lake Street
Sandpoint, ID 83864

CANCELLATION

SHOULD ANY OF THE ABOVE DESCRIBED POLICIES BE CANCELLED BEFORE THE EXPIRATION DATE THEREOF, NOTICE WILL BE DELIVERED IN ACCORDANCE WITH THE POLICY PROVISIONS.

AUTHORIZED REPRESENTATIVE

© 1988-2015 ACORD CORPORATION. All rights r.

The ACORD name and logo are registered marks of ACORD

WAIVER OF OUR RIGHT TO RECOVER FROM OTHERS ENDORSEMENT

We have the right to recover our payments from anyone liable for an injury covered by this policy. We will not enforce our right against the person or organization named in the Schedule. (This agreement applies only to the extent that you perform work under a written contract that requires you to obtain this agreement from us.)

ANY PERSON OR ORGANIZATION AS REQUIRED BY WRITTEN CONTRACT

This endorsement changes the policy to which it is attached and is effective on the date issued unless otherwise stated.

Endorsement Effective: 07/01/23 to 07/01/24

Policy No.: ALE 6036-23

Insured: GINNO CONSTRUCTION CO

Insurance Company: Associated Loggers Exchange

Endorsement No.: WC 00 03 13

Countersigned by: _____

© 1983 National Council on Compensation Insurance.

CERTIFICATE OF LIABILITY INSURANCE

DATE 6/10/2024

THIS CERTIFICATE IS ISSUED AS A MATTER OF INFORMATION ONLY AND CONFERS NO RIGHTS UPON THE CERTIFICATE HOLDER. THIS CERTIFICATE DOES NOT AFFIRMATIVELY OR NEGATIVELY AMEND, EXTEND OR ALTER THE COVERAGE AFFORDED BY THE POLICIES BELOW. THIS CERTIFICATE OF INSURANCE DOES NOT CONSTITUTE A CONTRACT BETWEEN THE ISSUING INSURER(S), AUTHORIZED REPRESENTATIVE OR PRODUCER, AND THE CERTIFICATE HOLDER.

IMPORTANT: If the certificate holder is an ADDITIONAL INSURED, the policy(ies) must have ADDITIONAL INSURED provisions or be endorsed. If SUBROGATION IS WAIVED, subject to the terms and conditions of the policy, certain policies may require an endorsement. A statement on this certificate does not confer rights to the certificate holder in lieu of such endorsement(s).

PRODUCER License # 121437 Associated Insurance Services PO Box 16410 Boise, ID 83715	CONTACT NAME: Sarah Herman PHONE (A/C, No, Ext): (208) 955-8182 FAX (A/C, No): (208) 336-1137 E-MAIL ADDRESS: sarahh@associatedins.com
	INSURER(S) AFFORDING COVERAGE — NAIC #
	INSURER A : Associated Loggers Exchange — 37370
INSURED Ginno Construction of Idaho, Inc. dba Ginno Construction Co 3893 N Schreiber Way Coeur d'Alene, ID 83815	INSURER B :
	INSURER C :
	INSURER D :
	INSURER E :
	INSURER F :

COVERAGES **CERTIFICATE NUMBER:** **REVISION NUMBER:**

THIS IS TO CERTIFY THAT THE POLICIES OF INSURANCE LISTED BELOW HAVE BEEN ISSUED TO THE INSURED NAMED ABOVE FOR THE POLICY PERIOD INDICATED. NOTWITHSTANDING ANY REQUIREMENT, TERM OR CONDITION OF ANY CONTRACT OR OTHER DOCUMENT WITH RESPECT TO WHICH THIS CERTIFICATE MAY BE ISSUED OR MAY PERTAIN, THE INSURANCE AFFORDED BY THE POLICIES DESCRIBED HEREIN IS SUBJECT TO ALL THE TERMS, EXCLUSIONS AND CONDITIONS OF SUCH POLICIES. LIMITS SHOWN MAY HAVE BEEN REDUCED BY PAID CLAIMS.

INSR LTR	TYPE OF INSURANCE	ADDL INSD	SUBR WVD	POLICY NUMBER	POLICY EFF (MM/DD/YYYY)	POLICY EXP (MM/DD/YYYY)	LIMITS	
	COMMERCIAL GENERAL LIABILITY						EACH OCCURRENCE	$
	☐ CLAIMS-MADE ☐ OCCUR						DAMAGE TO RENTED PREMISES (Ea occurrence)	$
							MED EXP (Any one person)	$
							PERSONAL & ADV INJURY	$
	GEN'L AGGREGATE LIMIT APPLIES PER:						GENERAL AGGREGATE	$
	☐ POLICY ☐ PRO-JECT ☐ LOC						PRODUCTS - COMP/OP AGG	$
	☐ OTHER:							$
	AUTOMOBILE LIABILITY						COMBINED SINGLE LIMIT (Ea accident)	$
	☐ ANY AUTO						BODILY INJURY (Per person)	$
	☐ OWNED AUTOS ONLY ☐ SCHEDULED AUTOS						BODILY INJURY (Per accident)	$
	☐ HIRED AUTOS ONLY ☐ NON-OWNED AUTOS ONLY						PROPERTY DAMAGE (Per accident)	$
								$
	☐ UMBRELLA LIAB ☐ OCCUR						EACH OCCURRENCE	$
	☐ EXCESS LIAB ☐ CLAIMS-MADE						AGGREGATE	$
	☐ DED ☐ RETENTION $							$
A	WORKERS COMPENSATION AND EMPLOYERS' LIABILITY ANY PROPRIETOR/PARTNER/EXECUTIVE OFFICER/MEMBER EXCLUDED? (Mandatory in NH) Y/N: N If yes, describe under DESCRIPTION OF OPERATIONS below	N / A	X	ALE6036-24	7/1/2024	7/1/2025	X PER STATUTE ☐ OTH-ER	
							E.L. EACH ACCIDENT	$ 1,000,000
							E.L. DISEASE - EA EMPLOYEE	$ 1,000,000
							E.L. DISEASE - POLICY LIMIT	$ 1,000,000

DESCRIPTION OF OPERATIONS / LOCATIONS / VEHICLES (ACORD 101, Additional Remarks Schedule, may be attached if more space is required)

State of Idaho Benefits
Elective Coverage: Yes for the Owners Kris Pereira, Rich Wells, Brian Longwell

Re: TRAVERS PARK PLAYGROUND & SPLASH PAD CONSTRUCTION

CERTIFICATE HOLDER

City of Sandpoint
City Clerk
1123 Lake Street
Sandpoint, ID 83864

CANCELLATION

SHOULD ANY OF THE ABOVE DESCRIBED POLICIES BE CANCELLED BEFORE THE EXPIRATION DATE THEREOF, NOTICE WILL BE DELIVERED IN ACCORDANCE WITH THE POLICY PROVISIONS.

AUTHORIZED REPRESENTATIVE

© 1988-2015 ACORD CORPORATION. All rights r

The ACORD name and logo are registered marks of ACORD

WAIVER OF OUR RIGHT TO RECOVER FROM OTHERS ENDORSEMENT

We have the right to recover our payments from anyone liable for an injury covered by this policy. We will not enforce our right against the person or organization named in the Schedule. (This agreement applies only to the extent that you perform work under a written contract that requires you to obtain this agreement from us.)

ANY PERSON OR ORGANIZATION AS REQUIRED BY WRITTEN CONTRACT

This endorsement changes the policy to which it is attached and is effective on the date issued unless otherwise stated.

Endorsement Effective: 07/01/24 to 07/01/25

Policy No.: ALE 6036-24

Insured: GINNO CONSTRUCTION CO

Insurance Company: Associated Loggers Exchange

Endorsement No.: WC 00 03 13 Countersigned by: _____

© 1983 National Council on Compensation Insurance.

PAYMENT BOND

Bond Number: 9452651

Contractor	**Surety**
Name: Ginno Construction of Idaho, Inc. Address *(principal place of business)*: 3893 N Schreiber Way Coeur d' Alene, ID 83815	Name: Fidelity and Deposit Company of Maryland Address *(principal place of business)*: 1299 Zurich Way, 5th Floor Schaumburg, IL 60196-1056
Owner Name: **City of Sandpoint** Mailing address *(principal place of business)*: **1123 Lake St.** **Sandpoint, ID 83864**	**Contract** Description *(name and location)*: **A24-5300-6: Travers Park Playground & Splash Pad Construction** Contract Price: $881,000.00 Effective Date of Contract: June 6, 2024

Bond

Bond Amount: $881,000.00 Eight Hundred Eighty-one Thousand and 00/100

Date of Bond: June 13, 2024

~~*(Date of Bond cannot be earlier than*~~ *Effective Date of Contract)*

Modifications to this Bond form:

☒ None ☐ See Paragraph 18

Surety and Contractor, intending to be legally bound hereby, subject to the terms set forth in this Payment Bond, do each cause this Payment Bond to be duly executed by an authorized officer, agent, or representative.

Contractor as Principal	Surety
Ginno Construction of Idaho, Inc. *(Full formal name of Contractor)*	Fidelity and Deposit Company of Maryland *(Full formal name of Surety) (corporate seal)*
By: 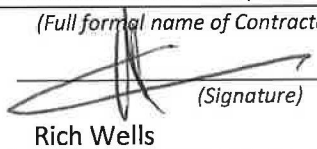 *(Signature)*	By: 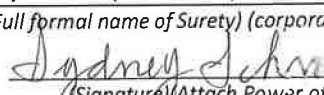 *(Signature) (Attach Power of Attorney)*
Name: Rich Wells *(Printed or typed)*	Name: Sydney Schmidt *(Printed or typed)*
Title: President	Title: Attorney-in-Fact
Attest:  *(Signature)*	Attest: 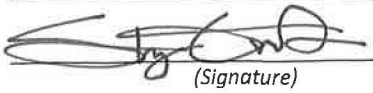 *(Signature)*
Name: Sarah A. Priddy *(Printed or typed)*	Name: Shelby Groth *(Printed or typed)*
Title: Witness	Title: Witness

Notes: (1) Provide supplemental execution by any additional parties, such as joint venturers. (2) Any singular reference to Contractor, Surety, Owner, or other party is considered plural where applicable.

1. The Contractor and Surety, jointly and severally, bind themselves, their heirs, executors, administrators, successors, and assigns to the Owner to pay for labor, materials, and equipment furnished for use in the performance of the Construction Contract, which is incorporated herein by reference, subject to the following terms.
2. If the Contractor promptly makes payment of all sums due to Claimants, and defends, indemnifies, and holds harmless the Owner from claims, demands, liens, or suits by any person or entity seeking payment for labor, materials, or equipment furnished for use in the performance of the Construction Contract, then the Surety and the Contractor shall have no obligation under this Bond.
3. If there is no Owner Default under the Construction Contract, the Surety's obligation to the Owner under this Bond will arise after the Owner has promptly notified the Contractor and the Surety (at the address described in Paragraph 13) of claims, demands, liens, or suits against the Owner or the Owner's property by any person or entity seeking payment for labor, materials, or equipment furnished for use in the performance of the Construction Contract, and tendered defense of such claims, demands, liens, or suits to the Contractor and the Surety.
4. When the Owner has satisfied the conditions in Paragraph 3, the Surety shall promptly and at the Surety's expense defend, indemnify, and hold harmless the Owner against a duly tendered claim, demand, lien, or suit.
5. The Surety's obligations to a Claimant under this Bond will arise after the following:
    5.1. Claimants who do not have a direct contract with the Contractor
        5.1.1. have furnished a written notice of non-payment to the Contractor, stating with substantial accuracy the amount claimed and the name of the party to whom the materials were, or equipment was, furnished or supplied or for whom the labor was done or performed, within ninety (90) days after having last performed labor or last furnished materials or equipment included in the Claim; and
        5.1.2. have sent a Claim to the Surety (at the address described in Paragraph 13).
    5.2. Claimants who are employed by or have a direct contract with the Contractor have sent a Claim to the Surety (at the address described in Paragraph 13).
6. If a notice of non-payment required by Paragraph 5.1.1 is given by the Owner to the Contractor, that is sufficient to satisfy a Claimant's obligation to furnish a written notice of non-payment under Paragraph 5.1.1.
7. When a Claimant has satisfied the conditions of Paragraph 5.1 or 5.2, whichever is applicable, the Surety shall promptly and at the Surety's expense take the following actions:
    7.1. Send an answer to the Claimant, with a copy to the Owner, within sixty (60) days after receipt of the Claim, stating the amounts that are undisputed and the basis for challenging any amounts that are disputed; and
    7.2. Pay or arrange for payment of any undisputed amounts.
    7.3. The Surety's failure to discharge its obligations under Paragraph 7.1 or 7.2 will not be deemed to constitute a waiver of defenses the Surety or Contractor may have or acquire as to a Claim, except as to undisputed amounts for which the Surety and Claimant have reached agreement. If, however, the Surety fails to discharge its obligations under Paragraph 7.1 or 7.2, the Surety shall indemnify the Claimant for the reasonable attorney's fees the Claimant incurs thereafter to recover any sums found to be due and owing to the Claimant.

8. The Surety's total obligation will not exceed the amount of this Bond, plus the amount of reasonable attorney's fees provided under Paragraph 7.3, and the amount of this Bond will be credited for any payments made in good faith by the Surety.
9. Amounts owed by the Owner to the Contractor under the Construction Contract will be used for the performance of the Construction Contract and to satisfy claims, if any, under any construction performance bond. By the Contractor furnishing and the Owner accepting this Bond, they agree that all funds earned by the Contractor in the performance of the Construction Contract are dedicated to satisfying obligations of the Contractor and Surety under this Bond, subject to the Owner's priority to use the funds for the completion of the work.
10. The Surety shall not be liable to the Owner, Claimants, or others for obligations of the Contractor that are unrelated to the Construction Contract. The Owner shall not be liable for the payment of any costs or expenses of any Claimant under this Bond, and shall have under this Bond no obligation to make payments to or give notice on behalf of Claimants, or otherwise have any obligations to Claimants under this Bond.
11. The Surety hereby waives notice of any change, including changes of time, to the Construction Contract or to related subcontracts, purchase orders, and other obligations.
12. No suit or action will be commenced by a Claimant under this Bond other than in a court of competent jurisdiction in the state in which the project that is the subject of the Construction Contract is located or after the expiration of one year from the date (1) on which the Claimant sent a Claim to the Surety pursuant to Paragraph 5.1.2 or 5.2, or (2) on which the last labor or service was performed by anyone or the last materials or equipment were furnished by anyone under the Construction Contract, whichever of (1) or (2) first occurs. If the provisions of this paragraph are void or prohibited by law, the minimum period of limitation available to sureties as a defense in the jurisdiction of the suit will be applicable.
13. Notice and Claims to the Surety, the Owner, or the Contractor must be mailed or delivered to the address shown on the page on which their signature appears. Actual receipt of notice or Claims, however accomplished, will be sufficient compliance as of the date received.
14. When this Bond has been furnished to comply with a statutory or other legal requirement in the location where the construction was to be performed, any provision in this Bond conflicting with said statutory or legal requirement will be deemed deleted here from and provisions conforming to such statutory or other legal requirement will be deemed incorporated herein. When so furnished, the intent is that this Bond will be construed as a statutory bond and not as a common law bond.
15. Upon requests by any person or entity appearing to be a potential beneficiary of this Bond, the Contractor and Owner shall promptly furnish a copy of this Bond or shall permit a copy to be made.
16. Definitions

    16.1. *Claim*—A written statement by the Claimant including at a minimum:

        16.1.1. The name of the Claimant;

        16.1.2. The name of the person for whom the labor was done, or materials or equipment furnished;

        16.1.3. A copy of the agreement or purchase order pursuant to which labor, materials, or equipment was furnished for use in the performance of the Construction Contract;

        16.1.4. A brief description of the labor, materials, or equipment furnished;

16.1.5. The date on which the Claimant last performed labor or last furnished materials or equipment for use in the performance of the Construction Contract;

16.1.6. The total amount earned by the Claimant for labor, materials, or equipment furnished as of the date of the Claim;

16.1.7. The total amount of previous payments received by the Claimant; and

16.1.8. The total amount due and unpaid to the Claimant for labor, materials, or equipment furnished as of the date of the Claim.

16.2. *Claimant*—An individual or entity having a direct contract with the Contractor or with a subcontractor of the Contractor to furnish labor, materials, or equipment for use in the performance of the Construction Contract. The term Claimant also includes any individual or entity that has rightfully asserted a claim under an applicable mechanic's lien or similar statute against the real property upon which the Project is located. The intent of this Bond is to include without limitation in the terms of "labor, materials, or equipment" that part of the water, gas, power, light, heat, oil, gasoline, telephone service, or rental equipment used in the Construction Contract, architectural and engineering services required for performance of the work of the Contractor and the Contractor's subcontractors, and all other items for which a mechanic's lien may be asserted in the jurisdiction where the labor, materials, or equipment were furnished.

16.3. *Construction Contract*—The agreement between the Owner and Contractor identified on the cover page, including all Contract Documents and all changes made to the agreement and the Contract Documents.

16.4. *Owner Default*—Failure of the Owner, which has not been remedied or waived, to pay the Contractor as required under the Construction Contract or to perform and complete or comply with the other material terms of the Construction Contract.

16.5. *Contract Documents*—All the documents that comprise the agreement between the Owner and Contractor.

17. If this Bond is issued for an agreement between a contractor and subcontractor, the term Contractor in this Bond will be deemed to be Subcontractor and the term Owner will be deemed to be Contractor.

18. Modifications to this Bond are as follows: **None**

PERFORMANCE BOND

Bond Number: 9452651

Contractor Name: Ginno Construction of Idaho, Inc. Address *(principal place of business)*: 3893 N Schreiber Way Coeur d' Alene, ID 83815	**Surety** Name: Fidelity and Deposit Company of Maryland Address *(principal place of business)*: 1299 Zurich Way, 5th Floor Schaumburg, IL 60196-1056
Owner Name: City of Sandpoint Mailing address *(principal place of business)*: 1123 Lake St. Sandpoint, Idaho 83864	**Contract** Description *(name and location)*: **A24-5300-6: Travers Park Playground & Splash Pad Construction** Contract Price: $881,000.00 Effective Date of Contract: June 6, 2024

Bond

Bond Amount: $881,000.00 Eight Hundred Eighty-one Thousand and 00/100

Date of Bond: June 13, 2024

(~~Date of Bond cannot be earlier than~~ Effective Date of Contract)

Modifications to this Bond form:

☒ None ☐ See Paragraph 16

Surety and Contractor, intending to be legally bound hereby, subject to the terms set forth in this Performance Bond, do each cause this Performance Bond to be duly executed by an authorized officer, agent, or representative.

Contractor as Principal	Surety
Ginno Construction of Idaho, Inc. *(Full formal name of Contractor)*	Fidelity and Deposit Company of Maryland *(Full formal name of Surety) (corporate seal)*
By: _____ *(Signature)*	By: _____ *(Signature)(Attach Power of Attorney)*
Name: Rich Wells *(Printed or typed)*	Name: Sydney Schmidt *(Printed or typed)*
Title: President	Title: Attorney-in-Fact
Attest: _____ *(Signature)*	Attest: _____ *(Signature)*
Name: Sarah A. Priddy *(Printed or typed)*	Name: Shelby Groth *(Printed or typed)*
Title: Witness	Title: Witness

Notes: (1) Provide supplemental execution by any additional parties, such as joint venturers. (2) Any singular reference to Contractor, Surety, Owner, or other party is considered plural where applicable.

1. The Contractor and Surety, jointly and severally, bind themselves, their heirs, executors, administrators, successors, and assigns to the Owner for the performance of the Construction Contract, which is incorporated herein by reference.
2. If the Contractor performs the Construction Contract, the Surety and the Contractor shall have no obligation under this Bond, except when applicable to participate in a conference as provided in Paragraph 3.
3. If there is no Owner Default under the Construction Contract, the Surety's obligation under this Bond will arise after:
   3.1. The Owner first provides notice to the Contractor and the Surety that the Owner is considering declaring a Contractor Default. Such notice may indicate whether the Owner is requesting a conference among the Owner, Contractor, and Surety to discuss the Contractor's performance. If the Owner does not request a conference, the Surety may, within five (5) business days after receipt of the Owner's notice, request such a conference. If the Surety timely requests a conference, the Owner shall attend. Unless the Owner agrees otherwise, any conference requested under this Paragraph 3.1 will be held within ten (10) business days of the Surety's receipt of the Owner's notice. If the Owner, the Contractor, and the Surety agree, the Contractor shall be allowed a reasonable time to perform the Construction Contract, but such an agreement does not waive the Owner's right, if any, subsequently to declare a Contractor Default;
   3.2. The Owner declares a Contractor Default, terminates the Construction Contract and notifies the Surety; and
   3.3. The Owner has agreed to pay the Balance of the Contract Price in accordance with the terms of the Construction Contract to the Surety or to a contractor selected to perform the Construction Contract.
4. Failure on the part of the Owner to comply with the notice requirement in Paragraph 3.1 does not constitute a failure to comply with a condition precedent to the Surety's obligations, or release the Surety from its obligations, except to the extent the Surety demonstrates actual prejudice.
5. When the Owner has satisfied the conditions of Paragraph 3, the Surety shall promptly and at the Surety's expense take one of the following actions:
   5.1. Arrange for the Contractor, with the consent of the Owner, to perform and complete the Construction Contract;
   5.2. Undertake to perform and complete the Construction Contract itself, through its agents or independent contractors;
   5.3. Obtain bids or negotiated proposals from qualified contractors acceptable to the Owner for a contract for performance and completion of the Construction Contract, arrange for a contract to be prepared for execution by the Owner and a contractor selected with the Owners concurrence, to be secured with performance and payment bonds executed by a qualified surety equivalent to the bonds issued on the Construction Contract, and pay to the Owner the amount of damages as described in Paragraph 7 in excess of the Balance of the Contract Price incurred by the Owner as a result of the Contractor Default; or
   5.4. Waive its right to perform and complete, arrange for completion, or obtain a new contractor, and with reasonable promptness under the circumstances:

5.4.1 After investigation, determine the amount for which it may be liable to the Owner and, as soon as practicable after the amount is determined, make payment to the Owner; or

5.4.2 Deny liability in whole or in part and notify the Owner, citing the reasons for denial.

6. If the Surety does not proceed as provided in Paragraph 5 with reasonable promptness, the Surety shall be deemed to be in default on this Bond seven days after receipt of an additional written notice from the Owner to the Surety demanding that the Surety perform its obligations under this Bond, and the Owner shall be entitled to enforce any remedy available to the Owner. If the Surety proceeds as provided in Paragraph 5.4, and the Owner refuses the payment, or the Surety has denied liability, in whole or in part, without further notice, the Owner shall be entitled to enforce any remedy available to the Owner.

7. If the Surety elects to act under Paragraph 5.1, 5.2, or 5.3, then the responsibilities of the Surety to the Owner will not be greater than those of the Contractor under the Construction Contract, and the responsibilities of the Owner to the Surety will not be greater than those of the Owner under the Construction Contract. Subject to the commitment by the Owner to pay the Balance of the Contract Price, the Surety is obligated, without duplication for:

   7.1. the responsibilities of the Contractor for correction of defective work and completion of the Construction Contract;

   7.2. additional legal, design professional, and delay costs resulting from the Contractor's Default, and resulting from the actions or failure to act of the Surety under Paragraph 5; and

   7.3. liquidated damages, or if no liquidated damages are specified in the Construction Contract, actual damages caused by delayed performance or non-performance of the Contractor.

8. If the Surety elects to act under Paragraph 5.1, 5.3, or 5.4, the Surety's liability is limited to the amount of this Bond.

9. The Surety shall not be liable to the Owner or others for obligations of the Contractor that are unrelated to the Construction Contract, and the Balance of the Contract Price will not be reduced or set off on account of any such unrelated obligations. No right of action will accrue on this Bond to any person or entity other than the Owner or its heirs, executors, administrators, successors, and assigns.

10. The Surety hereby waives notice of any change, including changes of time, to the Construction Contract or to related subcontracts, purchase orders, and other obligations.

11. Any proceeding, legal or equitable, under this Bond must be instituted in any court of competent jurisdiction in the location in which the work or part of the work is located and must be instituted within two years after a declaration of Contractor Default or within two years after the Contractor ceased working or within two years after the Surety refuses or fails to perform its obligations under this Bond, whichever occurs first. If the provisions of this paragraph are void or prohibited by law, the minimum periods of limitations available to sureties as a defense in the jurisdiction of the suit will be applicable.

12. Notice to the Surety, the Owner, or the Contractor must be mailed or delivered to the address shown on the page on which their signature appears.

13. When this Bond has been furnished to comply with a statutory or other legal requirement in the location where the construction was to be performed, any provision in this Bond conflicting with said statutory or legal requirement will be deemed deleted therefrom and provisions conforming to such

statutory or other legal requirement will be deemed incorporated herein. When so furnished, the intent is that this Bond will be construed as a statutory bond and not as a common law bond.

14. Definitions

    14.1. *Balance of the Contract Price*—The total amount payable by the Owner to the Contractor under the Construction Contract after all proper adjustments have been made including allowance for the Contractor for any amounts received or to be received by the Owner in settlement of insurance or other claims for damages to which the Contractor is entitled, reduced by all valid and proper payments made to or on behalf of the Contractor under the Construction Contract.

    14.2. *Construction Contract*—The agreement between the Owner and Contractor identified on the cover page, including all Contract Documents and changes made to the agreement and the Contract Documents.

    14.3. *Contractor Default*—Failure of the Contractor, which has not been remedied or waived, to perform or otherwise to comply with a material term of the Construction Contract.

    14.4. *Owner Default*—Failure of the Owner, which has not been remedied or waived, to pay the Contractor as required under the Construction Contract or to perform and complete or comply with the other material terms of the Construction Contract.

    14.5. *Contract Documents*—All the documents that comprise the agreement between the Owner and Contractor.

15. If this Bond is issued for an agreement between a contractor and subcontractor, the term Contractor in this Bond will be deemed to be Subcontractor and the term Owner will be deemed to be Contractor.

16. Modifications to this Bond are as follows: **None**

ZURICH AMERICAN INSURANCE COMPANY
COLONIAL AMERICAN CASUALTY AND SURETY COMPANY
FIDELITY AND DEPOSIT COMPANY OF MARYLAND
POWER OF ATTORNEY

KNOW ALL MEN BY THESE PRESENTS: That the ZURICH AMERICAN INSURANCE COMPANY, a corporation of the State of New York, the COLONIAL AMERICAN CASUALTY AND SURETY COMPANY, a corporation of the State of Illinois, and the FIDELITY AND DEPOSIT COMPANY OF MARYLAND a corporation of the State of Illinois (herein collectively called the "Companies"), by Robert D. Murray, Vice President, in pursuance of authority granted by Article V, Section 8, of the By-Laws of said Companies, which are set forth on the reverse side hereof and are hereby certified to be in full force and effect on the date hereof, do hereby nominate, constitute, and appoint H. Keith MCNALLY, Chris LARSON, Erin L. REPP, WM DINNEEN, Sydney SCHMIDT, Travis LONG, Shelby GROTH of Spokane, Washington, its true and lawful agent and Attorney-in-Fact, to make, execute, seal and deliver, for, and on its behalf as surety, and as its act and deed: **any and all bonds and undertakings,** and the execution of such bonds or undertakings in pursuance of these presents, shall be as binding upon said Companies, as fully and amply, to all intents and purposes, as if they had been duly executed and acknowledged by the regularly elected officers of the ZURICH AMERICAN INSURANCE COMPANY at its office in New York, New York., the regularly elected officers of the COLONIAL AMERICAN CASUALTY AND SURETY COMPANY at its office in Owings Mills, Maryland., and the regularly elected officers of the FIDELITY AND DEPOSIT COMPANY OF MARYLAND at its office in Owings Mills, Maryland., in their own proper persons.

The said Vice President does hereby certify that the extract set forth on the reverse side hereof is a true copy of Article V, Section 8, of the By-Laws of said Companies, and is now in force.

IN WITNESS WHEREOF, the said Vice-President has hereunto subscribed his/her names and affixed the Corporate Seals of the said **ZURICH AMERICAN INSURANCE COMPANY, COLONIAL AMERICAN CASUALTY AND SURETY COMPANY, and FIDELITY AND DEPOSIT COMPANY OF MARYLAND,** this 22nd day of November, A.D. 2023.

ATTEST:
ZURICH AMERICAN INSURANCE COMPANY
COLONIAL AMERICAN CASUALTY AND SURETY COMPANY
FIDELITY AND DEPOSIT COMPANY OF MARYLAND

By: Robert D. Murray
Vice President

By: Dawn E. Brown
Secretary

State of Maryland
County of Baltimore

On this 22nd day of November, A.D. 2023, before the subscriber, a Notary Public of the State of Maryland, duly commissioned and qualified, **Robert D. Murray, Vice President and Dawn E. Brown, Secretary** of the Companies, to me personally known to be the individuals and officers described in and who executed the preceding instrument, and acknowledged the execution of same, and being by me duly sworn, deposeth and saith, that he/she is the said officer of the Company aforesaid, and that the seals affixed to the preceding instrument are the Corporate Seals of said Companies, and that the said Corporate Seals and the signature as such officer were duly affixed and subscribed to the said instrument by the authority and direction of the said Corporations.

IN TESTIMONY WHEREOF, I have hereunto set my hand and affixed my Official Seal the day and year first above written.

Genevieve M. Maison

GENEVIEVE M. MAISON
NOTARY PUBLIC
BALTIMORE COUNTY, MD
My Commission Expires JANUARY 27, 2025

Authenticity of this bond can be confirmed at bondvalidator.zurichna.com or 410-559-8790

EXTRACT FROM BY-LAWS OF THE COMPANIES

"Article V, Section 8, Attorneys-in-Fact. The Chief Executive Officer, the President, or any Executive Vice President or Vice President may, by written instrument under the attested corporate seal, appoint attorneys-in-fact with authority to execute bonds, policies, recognizances, stipulations, undertakings, or other like instruments on behalf of the Company, and may authorize any officer or any such attorney-in-fact to affix the corporate seal thereto; and may with or without cause modify of revoke any such appointment or authority at any time."

CERTIFICATE

I, the undersigned, Vice President of the ZURICH AMERICAN INSURANCE COMPANY, the COLONIAL AMERICAN CASUALTY AND SURETY COMPANY, and the FIDELITY AND DEPOSIT COMPANY OF MARYLAND, do hereby certify that the foregoing Power of Attorney is still in full force and effect on the date of this certificate; and I do further certify that Article V, Section 8, of the By-Laws of the Companies is still in force.

This Power of Attorney and Certificate may be signed by facsimile under and by authority of the following resolution of the Board of Directors of the ZURICH AMERICAN INSURANCE COMPANY at a meeting duly called and held on the 15th day of December 1998.

RESOLVED: "That the signature of the President or a Vice President and the attesting signature of a Secretary or an Assistant Secretary and the Seal of the Company may be affixed by facsimile on any Power of Attorney...Any such Power or any certificate thereof bearing such facsimile signature and seal shall be valid and binding on the Company."

This Power of Attorney and Certificate may be signed by facsimile under and by authority of the following resolution of the Board of Directors of the COLONIAL AMERICAN CASUALTY AND SURETY COMPANY at a meeting duly called and held on the 5th day of May, 1994, and the following resolution of the Board of Directors of the FIDELITY AND DEPOSIT COMPANY OF MARYLAND at a meeting duly called and held on the 10th day of May, 1990.

RESOLVED: "That the facsimile or mechanically reproduced seal of the company and facsimile or mechanically reproduced signature of any Vice-President, Secretary, or Assistant Secretary of the Company, whether made heretofore or hereafter, wherever appearing upon a certified copy of any power of attorney issued by the Company, shall be valid and binding upon the Company with the same force and effect as though manually affixed.

IN TESTIMONY WHEREOF, I have hereunto subscribed my name and affixed the corporate seals of the said Companies, this 13th day of June, 2024.

Thomas O. McClellan
Vice President

TO REPORT A CLAIM WITH REGARD TO A SURETY BOND, PLEASE SUBMIT A COMPLETE DESCRIPTION OF THE CLAIM INCLUDING THE PRINCIPAL ON THE BOND, THE BOND NUMBER, AND YOUR CONTACT INFORMATION TO:

Zurich Surety Claims
1299 Zurich Way
Schaumburg, IL 60196-1056
reportsfclaims@zurichna.com
800-626-4577

Authenticity of this bond can be confirmed at bondvalidator.zurichna.com or 410-559-8790

RECEIVED
BY: CHB
JUN 18 2024
CITY OF SANDPOINT

SANDPOINT CITY COUNCIL AGENDA REQUEST FORM

Today's date: 6 / 16 / 24

Date of meeting 7 / 3 / 24

(City Council meetings are held the 1st and 3rd Wednesday of each month.)

Name of Citizen, Organization, Elected Official, or Department Head making request:
Pam Duquette Pam Duquette

Address: Sandpoint City Councilor

Phone number and email address: 208-448-1581 pduquette@sandpointidaho.gov

Authorized by: Kyle Schreiber Kyle Schreiber
name of City official *City official's signature*

(Department Heads, City Council members, and the Mayor are City officials.)

*Subject: Mayor's announcement limiting public zoom comments.

Summary of what is being requested: Chance for councilor's to be afforded a respectful discussion opportunity after Mayor's decision. Recent campaign platforms promoted improved public engagement opportunities, not limited ones.

The following information MUST be completed before submitting your request to the City Clerk:

1. Would there be any financial impact to the city? ☐ **Yes or No** ☑

   If yes, in what way? _____

2. Name(s) of any individual(s) or group(s) that will be directly affected by this action: | Have they been contacted? **Yes or No**

Community members	Yes in agenda packet

3. Is there a need for a general public information or public involvement plan? **Yes or No** ☐ ☐
   If yes, please specify and suggest a method to accomplish the plan: _____

4. Is an enforcement plan needed? **Yes or No** ☐ ☐ Additional funds needed? **Yes or No** ☐ ☑

5. Have all the affected departments been informed about this agenda item? **Yes or No** ☑ ☐

This form must be submitted no later than 6 working days prior to the scheduled meeting. All pertinent paperwork to be distributed to City Council must be attached.

ITEMS WILL NOT BE AGENDIZED WITHOUT THIS FORM

***City Staff, please check one box:** Consent ☐ Old Business ☐ New Business ☐ Other/Unknown ☐