Exhibit 1
P-24-024 & P-24-025
7887 Overlake Drive West

MEDINA, WASHINGTON

HEARING EXAMINER

A Remote Public Hearing
Wednesday, February 18, 2026, 12:00 PM

AGENDA

Virtual Meeting Participation

The scheduled hearing will be held using remote meeting technology. Please either login or call in a few minutes before the start of the meeting to participate. Written comments may still be submitted before the hearing by emailing Kimberly Gunderson, Planning Consultant, at kmahoney.planning@gmail.com. Written comments are given the same weight as verbal public testimony.

Join Zoom Meeting
https://medina-wa.zoom.us/j/87551204498?pwd=lpz2baxDkIiNDVU8xCWbGgfVuAzDcy.1

Meeting ID: 875 5120 4498
Passcode: 942962

One tap mobile
+12532050468,,87551204498#,,,,*942962# US
+12532158782,,87551204498#,,,,*942962# US (Tacoma)

Public Hearings:

NOTE: *The Hearing Examiner has the discretion to limit testimony to relevant non-repetitive comments and to set time limits to ensure an equal opportunity is available for all people to testify.*

PRE-DECISION HEARING:

File No.: P-24-024 Non-Administrative Shoreline Substantial Development Permit
P-24-025 SEPA

Agent: Ted Burns of Seaborn Pile Driving, Agent for 7887 Overlake Drive W LLC, property owner of 7887 Overlake Drive W, Medina, WA 98039

Proposal: Non-Administrative Substantial Development Permit to replace an existing non-conforming dock's solid decking with grated decking, replace an existing moorage cover with a translucent cover, replace an existing boat lift with an in-kind lift, and install two additional boat lifts for a total of three (3) boat lifts associated with the existing non-conforming dock. The project includes planting native vegetative species along the property's shoreline frontage as mitigation to offset any potential impacts to the Lake Washington shoreline. The described activities would occur at 7887 Overlake Drive W., Medina, WA 98039 (Parcel No.

3625049058).

Legal Info: Parcel #3625049058: POR OF GL'S 1 & 2 OF SD SEC DAF - BEG AT NXN OF SLY LN NE 6 TH ST & W LN OF ELY 65.61 FT OF SD GL 2 TH SLY PLW ELY LN OF SD GL 2 TO MEANDER LN OF ELY SH OF LK WA TH NELY ALG SD MEANDER LN TO ELY LN OF SD GL 2 TH CONT NELY ALG SD MEANDER LN 115.50 FT TH NLY ALG A LN WCH NXN AAP 30 FT S & 1236.38 FT W PLW SEC LN OF NE COR OF SD GL 1 TO SLY LN OF SD NE 6 TH ST TH WLY ALG SD SLY LN TO TPOB TGW POR BAAP 1236.38 FT W & 510 FT S OF NE COR OF GL 1 SD PT BEING ON S MGN OF NE 6TH ST TH S 89-02-59 E ALG SD S MGN 22 FT TH S 00-21-59 W PLW E LN OF GL 1 286.50 FT TH S 12-52-00 E 61.26 FT TH N 89-38-01 W 36.02 FT TH N 00-21-59 E PLW E LN OF SD GL 1 346.36 FT TO POB TGW 2ND CLASS SHORE LANDS ADJ AKA PAR A OF MEDING LLA #91-5 PER REC #911106-0341

Prepared by: Kimberly Gunderson, Mahoney Planning LLC, Planning Consultant for the City of Medina

PART 1 - GENERAL INFORMATION

ZONING: R-30, Residential

COMPREHENSIVE PLAN DESIGNATION: Single-Family Residential

SHORELINE ENVIRONMENT DESIGNATION: Shoreline Residential (landward of Ordinary High Water Mark [OHWM]) and Aquatic (waterward of OHWM)

CRITICAL AREAS: Shoreline (Lake Washington)

EXHIBITS:

1. Staff Report prepared by Mahoney Planning LLC, dated January 28, 2026
2. Declaration of Agency and LLC Delegation of Authority, received October 2, 2024
3. Proof of Ownership, received May 6, 2024
4. Ecological No Net Loss Assessment Report, prepared by Northwest Environmental Consulting, LLC, dated February 2024
5. Technical Memorandum, Grette Associates (Farallon Consulting), dated August 25, 2025
6. Legal Notices
    a. Determination of Complete Application, dated October 14, 2024
    b. Notice of Application, dated October 24, 2024
    c. Notice of Hearing, dated January 29, 2026
7. Mailing Labels and Buffer Map received May 6, 2024
8. Non-Administrative Substantial Development Application, received May 6, 2024
9. SEPA Environmental Checklist, prepared by Agent, dated December 31, 2024
10. SEPA Determination of Non-Significance, issued by Medina SEPA Responsible Official, dated January 6, 2026
11. Plan Set, prepared by Seaborn Pile Driving, revised December 29, 2025
12. Water Depth Waivers for North Lift, Center Lift, and South Lift, approved January 2, 2026
13. Establishment of Legal Non-conforming Dock, prepared by Agent, received December 2,

2025
14. Grated Decking Detail, “Sure Step” manufactured by Perspective Products, received December 2, 2025
15. Letter of Permission issued by the Army Corps of Engineers for 7887 Overlake Drive W LLC, dated April 22, 2024

PART 2 - SITE CHARACTERISTICS

EXISTING CONDITIONS: The subject site is developed with a single-family residence, detached garage, non-conforming dock with one associated boat lift, and related typical residential site improvements.

SURROUNDING ZONING:

Direction	Zoning	Present Use
North	Public	Medina Elementary School
South	Lake Washington	N/A
East	R-30 District	Residential
West	R-30 District	Residential

ACCESS: Vehicular access to the subject parcel is from Overlake Drive West, a public road.

PART 3 - COMPREHENSIVE PLAN

The residential nature of the city's shoreline preserves its character while encouraging good stewardship and enjoyment of the shoreline, including protecting and preserving shoreline ecological functions, which is the primary vision of the shoreline master program (SMP). The following comprehensive plan goals and policies apply to the proposed project:

SM-G8: Manage shoreline modification to avoid, minimize, or mitigate significant adverse impacts.

SM-G9: Minimize impacts to the natural environment and neighboring uses from new or renovated piers and docks and their associated components, such as boat lifts and canopies.

SM-P4.4 At a minimum, development should achieve no net loss of ecological functions, even for exempt development.

SM-P7.3: Boating facilities should not unduly obstruct navigable waters and should avoid causing adverse effects to recreational opportunities such as fishing, pleasure boating, swimming, beach walking, picnicking and shoreline viewing.

SM-P7.6: Boating facilities should be located, designed, constructed and operated so that other appropriate water-dependent uses are not adversely affected and to avoid adverse proximity impacts such as noise, light and glare; aesthetic impacts to adjacent land uses; and impacts to public visual access to the shoreline.

SM-P9.5: Establish development regulations that encourage property owners to make renovations to their existing piers and docks outside of normal maintenance and repairs that improve the environmental friendliness of their structure.

PART 4 - AGENCY REVIEW/PUBLIC COMMENT

NOTICES (Exhibit 6):

Application received:	May 6, 2024
Determination of Completeness:	October 14, 2024
Notice of Application:	October 24, 2024
Notice of Hearing:	January 29, 2026

The application was received on May 6, 2024, and was deemed *incomplete* on July 15, 2024. A revised application was received on August 6, 2024, which was again deemed *incomplete* on August 20, 2024. Another revised application was received on October 2, 2024, and was deemed *complete* on October 14, 2024, pursuant to MMC 16.80.100 (Exhibit 6a).

A Notice of Application (NOA) was sent by mail to property owners per MMC 16.80.140(B)(2) and was posted on-site and at other public notice locations such as city hall, the Medina Post Office, park boards and the City of Medina's website on October 24, 2024. Pursuant to MMC 16.80.110(B)(7), a 30-day comment period was established (Exhibit 6b). No comments were received by the City in response to the NOA.

Consistent with MMC 16.80.120, a Notice of Hearing (NOH) was issued on January 29, 2026. The notice was mailed to property owners according to MMC 16.80.140(B)(2), published in The Seattle Times newspaper, and posted on the site and other public notice locations including city hall, the Medina Post Office, city park boards, and the City of Medina's website (Exhibit 6c). At the time of this staff report's preparation, no comments were received by the City in response to the NOH.

GENERAL PUBLIC COMMENTS: No public comments were received by the City in response to the NOA or the NOH as of the date of this staff report. Any comments received by the public in response to the NOH after the dissemination of this staff report will be entered into the record during the public hearing and will be addressed, as needed, in written or spoken testimony by the City during the hearing.

AGENCY COMMENTS: No agency comments were received.

PART 5 - STAFF ANALYSIS

GENERAL:

1. 7887 Overlake Dr W LLC is the owner and taxpayer of record for 7887 Overlake Drive W (Parcel No. 3625049058) according to the proof of ownership submitted by the applicant (Exhibit 3). The property owner is represented by Seaborn Pile Driving, a part of Seaborn Companies (see Exhibit 2).

2. The proposed project consists of repair/replacement work and the addition of two new boat lifts at the subject site. All project activities are proposed to occur overwater in the Lake Washington shorelands fronting the subject site to its south. The upland site is an approximately 2.59 acre parcel and is rectangularly shaped with maximum dimensions of approximately 751 feet (greatest length) by 173 feet (greatest width). The site is developed with a single-family residence and typical appurtenant features, including a

garage and outdoor leisure space. The site is also developed with an overwater dock that is non-conforming to development standards applicable to the subject dock today.

3. The subject dock structure is non-conforming to a number of design and dimensional standards that would be applicable to the dock if built today. The applicant bears the burden of proving the legal establishment of non-conformities associated with the subject dock. Any legally established nonconforming structure may continue until such time that the rights for the nonconformity are abandoned.

4. The applicant has applied for a Non-Administrative Shoreline Substantial Development Permit to replace the existing non-conforming dock's solid decking with grated decking, replace an existing moorage cover with a translucent cover, replace an existing boat lift with an in-kind lift, and install two additional boat lifts for a total of three (3) boat lifts associated with the existing non-conforming dock. The applicant also proposes shoreline mitigation by planting native species along the property's shoreline frontage. Proposed improvements to the site are depicted in the applicant's plan set (Exhibit 11).

ENVIRONMENTAL (SEPA) REVIEW:

5. The proposed project has undergone a SEPA Threshold Determination under Medina file no. P-24-025. The City of Medina is the SEPA Lead Agency for this project. The City has reviewed a SEPA Environmental Checklist (Exhibit 9) and other project information on file and has determined that the proposed project does not have a probable significant adverse impact on the environment. A Determination of Non-significance (DNS) was issued according to WAC 197-11-355 on January 7, 2026 (Exhibit 10), with a 14-day comment period and an appeal deadline of January 21, 2026. No comments or appeals were timely filed with the City.

ANALYSIS OF THE NON-ADMINISTRATIVE SUBSTANTIAL DEVELOPMENT PERMIT:

6. The Medina Municipal Code (MMC) 16.72.100(D) requires a Non-Administrative Substantial Development Permit for activities and uses defined as "development" pursuant to RCW 90.58.030(3)(a) and located within the shoreline jurisdiction as defined by the Shoreline Management Act. The proposal for the dock repair and boat lift additions meet these criteria. The proposal does not qualify for a substantial development permit exemption as outlined in MMC 16.70.030. The project proposal also does not qualify for an *Administrative* Substantial Development Permit as outlined in MMC 16.71.050(D), given the total fair-market value of the entire proposal exceeds $50,000 (Exhibit 8). Therefore, a *Non-Administrative* Substantial Development Permit is required to authorize the proposed project.

7. The Shoreline use Table is codified in MMC 16.62.040 and outlines that the proposed use (e.g., piers, docks, boat lifts, and covered moorage) are permitted uses in the City's Aquatic Environment designation.

8. MMC 16.66.010(B) requires that to assure no net loss of shoreline ecological functions, applicants must demonstrate a reasonable effort to analyze environmental impacts from a proposal and include measures to mitigate impacts on shoreline ecological functions.

   The applicant has prepared an Ecological No Net Loss Assessment Report ("No Net Loss Report," see Exhibit 4). It was prepared by a professional biologist and analyzes the

ecologic effect of the project, details a mitigation plan and monitoring measures, and discusses best management practices that would be employed to minimize the potential for the proposed project to cause a loss of ecological function.

The No Net Loss Report was reviewed by the City's third-party biological consultant, Grette Associates (Grette), for their recommendation on whether the project aligned with provisions of the MMC governing no net loss of ecological function. Grette reviewed the No Net Loss Report and found that the No Net Loss Report, "included sufficient information to ensure compliance with the no net loss standard defined in Subtitle 16.6 (Shoreline Master Program [SMP]) of the current version of the Medina Municipal Code" (Exhibit 5). Based on Grette's review findings captured in Exhibit 5, the City finds that the proposed project will have no net loss of ecological function if constructed and mitigated as proposed. Staff have prepared Recommended Condition No. 1 in Part 7 of this staff report for the Hearing Examiner to consider adopting as a part of his decision to ensure that the proposed mitigation is installed consistent with Exhibits 4 and 11, which would reassure proper stewardship of Lake Washington and the Medina shoreline at large.

9. MMC 16.66.090 establishes provisions for non-conformities in the Medina regulated shoreline. The subject dock is a non-conforming structure; it is configured or constructed in manners which do not conform to present regulations or standards of the SMP. The SMP today would require the dock to maintain 12 foot setbacks from adjoining properties; the subject dock is approximately 9 feet and 10 inches from the adjoining property to the south. From the OHWM, the dock is allowed to be a maximum of 100 feet in length; the subject dock is approximately 110 feet and 8 inches in length measured from OHWM. The maximum width of the dock's walkway within 30 feet of the OHWM is 4 feet, and beyond 30 feet may be as wide as 6 feet; the subject dock is a consistent width of approximately 8 feet for the entire length of the walkway. Piles must be a minimum of 18 feet waterward of the OHWM; the four landward-most piles associated with the subject dock are closer than 18 feet from the OHWM. The dock's decking is required to be constructed of grated material that allows for at least 40% light transmission; the subject dock is constructed of solid decking. Moorage covers are required to be translucent; the existing moorage cover associated with the subject dock is opaque. Lastly, a covered moorage structure shall be located within the building envelope prescribed by MMC 16.65.070(C); the subject dock is located outside of this building envelope.

   It is the applicant's burden to prove the legality of a non-conforming structure. Exhibit 13 has been prepared to document the built history of the non-conforming dock. Exhibit 13 includes publicly sourced aerial imagery of the subject dock dating back to 1936. Imagery from 1936, 1977, 1990, and 2007 are included in Exhibit 13. The imagery conveys that the dock has existed since at least 1936, and that the dock has existed in an observed unchanged state since at least 1977, which pre-dates the adoption of Medina's first SMP in 1988. In a further attempt to establish a legal right to the non-conforming dock, the applicant submitted a Public Records Request to the City (request no. 25-171) which produced no historic records related to the subject dock. In reviewing Exhibit 13, the City finds that the subject dock was constructed prior to the effective date of the Medina SMP, and therefore would not have been subject to the provisions of today's SMP which the dock is non-conforming to. The City finds that the applicant has proven its legal right to the non-conforming structural components of the subject dock.

   Any legally established nonconforming structure may continue until such time that the

rights for the nonconformity are abandoned; where the rights to a non-conforming structure have been abandoned, subsequent repair work of the structure shall require the structure to be brought into compliance with all development regulations in effect. The applicant is not proposing to increase the degree with which any of the aforementioned components of the dock are non-conforming from the SMP; rather, the applicant proposes to repair the existing non-conforming dock by replacing its existing solid wood decking with grated decking that will allow an estimated 53% light transmission through the decking material to the substrate of Lake Washington, and replace the existing opaque moorage cover with a translucent cover, increasing the dock's conformance with the Medina SMP. While the proposed repair work to the subject dock improves the dock's SMP conformance, the degree of decking repair work must be limited to retain legally established non-conforming rights; MMC 16.65.060(D)(4) and MMC 16.66.090(E)(4) read together set forth that replacement of the dock's substructure would exceed the degree of repair work that may be completed to a non-conforming dock while retaining its non-conforming rights. The applicant has indicated in its application materials (Sheet 5 of Exhibit 11) that the decking repair work will not include replacement of the dock's substructure. Therefore, the applicant has conveyed to the satisfaction of the City a legal right to its non-conformities which are not being abandoned as a result of the project scope. The applicant may continue to enjoy its legal right to non-conforming structural components of the subject dock.

10. MMC 16.65.040 establishes the dimensional and design standards for the existing dock structure. Based on the foregoing conclusions that the dock is subject to legal non-conforming rights for those analyzed existing non-compliant components, the dock is subject to the dimensional standards established for "existing structures" in Table 16.65.040 of MMC 16.65.040.

    MMC 16.65.070 establishes the dimensional and design standards for the existing covered moorage appurtenant to the subject dock. The existing moorage cover is approximately 405 square feet and is constructed of opaque material. The applicant proposes to replace the covered moorage with a translucent moorage cover of similar size.

    MMC 16.65.080 establishes the dimensional and design standards for the three proposed boat lifts. The applicant proposes to replace one existing boat lift and install two additional boat lifts for a total of three boat lifts at the subject dock. The dock is used exclusively by the subject property and is not a joint use dock.

    <u>MMC 16.65.040 – (Existing Structure) Dock:</u>

    The maximum overwater surface coverage for an existing dock is 1,200 square feet when the dock is used by a single property owner; the dock is used only by the owner of its upland residence at 7887 Overlake Drive W. Existing docks used by one property owner are required to maintain 12 foot setbacks from their adjoining parcels. The maximum length of the dock shall not exceed 100 feet from the OHWM. The is no maximum length or width of fingers or ells. The maximum width of a walkway located within 30 feet waterward of the OHWM is 4 feet. The maximum width of a walkway located greater than 30 feet waterward of the OHWM is 6 feet. The maximum height above the plane of the OHWM and the bottom of the stringers on the dock is 1.5 feet. The maximum height above the plane of the OHWM and the top of the decking of a pier is 5 feet. Decking for piers, docks, and platform lifts shall be grated or made with materials that allow a minimum of 40% light to be transmitted through. The maximum

height of piles above the top of a pier is 5 feet, and is otherwise limited to a maximum height of 7 feet above the plane of the OHWM. The minimum distance of the landward edge of ells, fingers, buoys, and moorage piles in 30 feet and a minimum water depth of 10 feet unless a water depth waiver is issued by the City. The minimum distance of all piles, except moorage piles, waterward from the OHWM is 18 feet.

The applicant is proposing to repair its existing non-conforming dock by replacing the existing decking. As has been described above in Part 5, Staff Analysis Item 9, the existing dock is legally non-conforming to numerous dimensional standards that would be applicable to the development of a dock today. The overwater coverage of the existing dock is approximately 1,235 square feet, which is proposed to marginally reduce to 1,174 square feet (Sheet 5 of Exhibit 11) as a result of removing solid decking that overhangs the dock's framing with grated decking built within the dimensions of the dock's existing framing. The existing length of the dock from OHWM is approximately 110 feet and 8 inches (Sheet 4 of Exhibit 11), which would remain as it exists. The width of the walkway would be approximately 7 feet and 10 inches feet (Sheet 4 of Exhibit 11), a nominal reduction compared to the existing 8 foot wide walkway. The existing dock is constructed atop 26 piles, which would remain as they exist. The existing finger landward of the existing boat slip is approximately 2 feet and 4 inches wide (Sheet 3 of Exhibit 11), and is proposed to be reduced to a width of 1 foot and 10 inches (Sheet 4 of Exhibit 11). The landward finger would be approximately 87.5 feet from the OHWM (Sheet 4 of Exhibit 11). The height of the dock above the plane of the OHWM and the bottom of the stringers is approximately 4 inches (see Sheet 6 of Exhibit 11) and will remain unchanged by the proposed dock repair project. The height above the plane of the OHWM and the top of the decking is approximately 1 foot and 2 inches (Sheet 6 of Exhibit 11). A grated deck allowing for an advertised 53% light penetration would be installed throughout the entirety of the dock, replacing the existing solid wood decking (see Exhibit 14).

As proposed, the dock repair **complies** with the germane design and dimensional standards for repair or replacement activities on existing docks set forth in MMC 16.65.040, or is otherwise legally non-conforming to those standards which it does not comply with.

<u>MMC 16.65.070 – Covered Moorage:</u>

MMC 16.65.070 sets forth the requirements for covered moorage. Each pier or dock is allowed to have one covered moorage which is no larger than 500 square feet. The covered moorage must maintain 12 foot setbacks from adjoining properties. The covered moorage must be made of translucent materials and must be no less than 8 feet tall from the plane of the OHWM, and no more than 16 feet tall from the plane of the OHWM. A covered moorage structure must be located with the building envelope set forth in MMC 16.65.070(C).

The applicant proposes to maintain the roof of the existing moorage cover, which is approximately 405 square feet in size (Sheet 5 of Exhibit 11). The moorage cover is approximately 16 feet and 8 inches from the property line of the adjoining property to the south and is nearly 97 feet from the property line to the north (Sheet 4 of Exhibit 11); the distance between the existing moorage cover and the adjoining neighbors is not proposed to change with the replacement of the structure's roof material. From the plane of the OHWM, the moorage cover is proposed to be approximately 9 feet and 10 inches tall

(Sheet 6 of Exhibit 11), consistent with its allowed height.

As has been previously described, the site is developed with an existing covered moorage structure which is non-conforming to the required location within the building envelope prescribed the MMC 16.65.070(C) and is covered with non-conforming opaque material. The applicant proposes to repair the covered moorage by replacing its opaque roof with a translucent roof, while maintaining the canopy's existing 405 square foot footprint at the subject dock. The applicant has demonstrated legal non-conforming rights with regard to its moorage canopy's location within the building envelope prescribed by MMC 16.65.070(C), and the subject proposal does not include an expanse or increase to that non-conformity. The moorage canopy may continue to enjoy its legal non-conforming right to be constructed outside of the prescribed building envelope.

As proposed, the moorage cover **complies** with the germane design and dimensional standards for moorage covers set forth in MMC 16.65.070, or is otherwise legally non-conforming to those standards which it does not comply with.

MMC 16.65.080 – Boat Lifts:

MMC 16.65.080 sets forth the requirements for boat lifts. The maximum distance waterward of the OHWM where a lift may be located is no more than 100 feet. The minimum distance waterward of the OHWM where a lift may be located is no less than 30 feet and 9 feet of water depth. The maximum number of boat lifts allowed per single dwelling using the dock is three. The boat lifts must maintain 12 foot setbacks from adjoining properties.

The applicant proposes to replace the existing boat lift and install two additional boat lifts for a total of three boat lifts associated with the existing dock. The distance of the existing boat lift is approximately 90 feet from the OHWM (see Sheet 3 of Exhibit 11). The replaced boat lift and proposed new boat lifts will be located more than 30 feet and less than 100 feet from the OHWM; the closest boat lift is approximately 63 feet and 3 inches feet from the OHWM, and the furthest is approximately 90 feet and 3 inches feet from OHWM (see Sheet 5 of Exhibit 11). The subject dock is currently improved with one existing boat lift; the applicant proposes to replace the existing boat lift beneath the covered moorage and install two additional boat lifts for a total of three boat lifts associated with the subject dock. Each of the three boat lifts will not be able to meet the 9-foot minimum water depth (see Sheet 6 of Exhibit 11); in certain instances, the City may issue a waiver to the minimum water depth requirements (MMC 16.65.080(D)). The applicant has applied for water depth waivers for each boat lift, which the City has reviewed against the criteria set forth in MMC 16.65.080(D) and has approved (Exhibit 12).

As proposed, the applicant's proposed boat lifts **comply** with the germane design and dimensional standards for moorage covers set forth in MMC 16.65.080.

ANALYSIS OF THE MEDINA COMPREHENSIVE PLAN:

1. SM-G8: Manage shoreline modification to avoid, minimize, or mitigate significant adverse impacts.

   Staff Discussion: The proposed dock repair work has demonstrated an avoidance of significant adverse impacts, and in fact is found to improve the ecological environment of

the project area. The applicant's No Net Loss Report (Exhibit 4) has been reviewed by the City's third-party biological consultant, Grette (Exhibit 5) who concurs that no net loss of ecological function will occur as a result of the proposed project. Additionally, the City's SEPA Responsible Official has reviewed the applicant's SEPA Checklist (Exhibit 9) and found that the proposed project action is unlikely to adversely affect the environment, particularly given its increase of light transmission to the shallow substrate by replacing opaque structural components with grated decking and a translucent moorage cover.

The proposed application has demonstrated consistency with this Medina Comprehensive Plan goal.

2. SM-G9: Minimize impacts to the natural environment and neighboring uses from new or renovated piers and docks and their associated components, such as boat lifts and canopies.

   Staff Discussion: As has been described in the staff discussion of SM-G8 in this section, the natural environment is not expected to be adversely affected by the proposed dock repair project. The dock's configuration has been demonstrated to exist for many decades without any known impacts to neighboring uses, despite its non-conforming proximity to the southerly neighbor's property line or the dock's non-conforming length of approximately 110 feet and 8 inches from OHWM. Notably, each of the subject site's neighboring properties are improved with a dock which is at least 141 feet from the subject dock, far more distant than would be achieved by compliant setbacks along each adjoining property line. Given that the proposed dock repair project will not amend the configuration of the dock, and considering the ample spacing between the subject dock and neighboring docks, impacts to neighboring uses are expected to be negligible.

   The proposed application has demonstrated consistency with this Medina Comprehensive Plan goal.

3. SM-P4.4: At a minimum, development should achieve no net loss of ecological functions, even for exempt development.

   Staff Discussion: See staff discussion in response to SM-G8 in this section.

   The proposed application has demonstrated consistency with this Medina Comprehensive Plan policy.

4. SM-P7.3: Boating facilities should not unduly obstruct navigable waters and should avoid causing adverse effects to recreational opportunities such as fishing, pleasure boating, swimming, beach walking, picnicking and shoreline viewing.

   Staff Discussion: The subject dock is not expected to unduly obstruct navigable waters or cause adverse effects to recreational opportunities. The non-conforming dock is proposed to maintain its existing dimensional configuration; proposed work at the dock is limited to replacement of decking, replacement of the moorage cover, and the installation of two dimensionally code-compliant boat lifts. The dock has been documented as existing for at least 90 years (Exhibit 13); given its longevity and the limited scope of work which would not extend the length or massing of the dock, the dock is not expected to obstruct navigable waters or adversely affect recreational opportunities in its vicinity.

The proposed application has demonstrated consistency with this Medina Comprehensive Plan policy.

5. SM-P7.6: Boating facilities should be located, designed, constructed and operated so that other appropriate water-dependent uses are not adversely affected and to avoid adverse proximity impacts such as noise, light and glare; aesthetic impacts to adjacent land uses; and impacts to public visual access to the shoreline.

   Staff Discussion: See staff discussion in response to SM-P7.3 in this section.

   The proposed application has demonstrated consistency with this Medina Comprehensive Plan policy.

6. SM-P9.5: Establish development regulations that encourage property owners to make renovations to their existing piers and docks outside of normal maintenance and repairs that improve the environmental friendliness of their structure.

   Staff Discussion: The proposed dock repair work is a renovation of an existing dock that improves the environmental friendliness of the structure. See staff discussion in response to SM-G8 in this section.

   The proposed application has demonstrated consistency with this Medina Comprehensive Plan policy.

PART 6 - CONCLUSIONS

1. According to MMC 16.72.100(C) and MMC 16.80.060(C), the Hearing Examiner has the authority to hold a public hearing and issue a decision on this application.

2. Notice of this public hearing was posted on the property and mailed to surrounding property owners within 300 feet, published in the Seattle Times newspaper, and posted at City Hall, the Medina Post Office, and other locations around Medina on January 29, 2026, more than 15 days before the hearing date (Exhibit 6c).

3. According to MMC 16.72.100(F), a Substantial Development Permit may only be approved if the following criteria are met:

   a. *Requirement: The proposed development is consistent with the policy and provisions of the State Shoreline Management Act of 1971 (chapter 90.58 RCW).*

      CONCLUSION: The Medina Shoreline Master Program (SMP) has been adopted in a manner that is consistent with the policies and provisions of the Washington Shoreline Management Act ("the Act," RCW 90.58). MMC 16.60.060(A) sets forth that "all use and development proposals, including those that do not require a permit, must comply with the policies and regulations established by the Act as expressed through the Shoreline Master Program (SMP)." Because the Medina SMP has been adopted to express the Act's policies and regulations, an applicant's consistency with the provisions of the Medina SMP inherently conveys consistency with the policies and provisions of the Act. As represented in Part 5 of this staff report, the proposed project is consistent with the provisions of the Medina SMP and is therefore consistent with the Washington Shoreline Management Act. This

criterion has been satisfied.

b. *Requirement: The proposed development is consistent with the State Shoreline Management Permit and Enforcement Procedures (chapter 173-27 WAC).*

CONCLUSION: The Medina SMP has been adopted in a manner that is consistent with the guidelines of WAC Chapter 173-27. MMC 16.60 has been adopted under the authority of RCW 90.57 and WAC Chapter 173-27 (MMC 16.60.040), and its purpose is to comply with WAC Chapter 173-27 (MMC 16.60.030). Because the Medina SMP has been adopted in a manner that complies with WAC Chapter 173-27, an application's consistency with the provisions of the Medina SMP inherently conveys consistency with WAC Chapter 173-27. As is represented in Part 5 of this staff report, the proposed project is consistent with the provisions of the Medina SMP and is therefore consistent with the Washington Shoreline Management Permit and Enforcement Procedures. This criterion has been satisfied.

c. *Requirement: The proposed development is consistent with the provisions of the city shoreline master program.*

CONCLUSION: As has been demonstrated in the analysis provided in Part 5 of this staff report, the applicant's proposed dock repair work and boat lift additions are consistent with the use provisions, non-conforming structure provisions, and dimensional limitations outlined in the provisions of the Medina SMP. Therefore, this criterion has been satisfied.

PART 7 - STAFF RECOMMENDATION

Staff recommends the Hearing Examiner **approve** the Non-Administrative Substantial Development Permit (File No. P-24-024) given the project's demonstrated consistency with the Medina Municipal Code, Medina Shoreline Master Program, the State Shoreline Management Act of 1971, and the State Shoreline Management Permit and Enforcement Procedures.

Should the Hearing Examiner approve the Non-Administrative Substantial Development Permit, then the City recommends the Hearing Examiner include the following conditions of approval with his decision:

1. Mitigation shall be provided consistent with Exhibit 11, including the monitoring plan. A financial security for the mitigation plan described in Exhibit 11 will be required by the City in a form and amount consistent with MMC 16.66.120 prior to issuance of a building permit for the subject dock improvements.

2. The development must comply with and be consistent with the Medina Shoreline Master Program (Chapters 16.60 through 16.67 MMC, in combination with Sub-Element 2.1 of the Medina Comprehensive Plan per MMC 16.60.010), Chapter 173-27 WAC (Shoreline Management Permit and Enforcement Procedures), and Chapter 90.58 RCW (Shoreline Management Act).

3. The applicant shall obtain a Hydraulic Project Approval (HPA) from the Washington Department of Fish and Wildlife (WDFW), unless expressly in writing informed otherwise

by WDFW, and shall provide the approved HPA authorization to the City prior to issuance of a building permit.

4. The project shall be carried out in substantial conformance with the representations appended to this staff report.

5. All other zoning and development regulations applicable to the project shall be followed and confirmed during the building permit review.

Date: 1-28-2026

Kimberly Gunderson, Mahoney Planning, LLC
on behalf of the City of Medina

Exhibit 2
P-24-024 & P-24-025
7887 Overlake Drive West

MEDINA WASHINGTON
DEVELOPMENT SERVICES
501 EVERGREEN POINT ROAD MEDINA, WA 98039
PHONE: 425-233-6414/6400

OWNER'S DECLARATION OF AGENCY

A-05

Project Address 7887 Overlake Drive West **Parcel No.** 3625049058

I/We Kathy Young do hereby declare and affirm that I/we are:

☐ the owners or contract purchasers of the above property

☒ an officer or representative of 7887 Overlake Dr. W LLC, a Washington corporation or trust which is the owner of the above property. I am duly authorized by this entity to represent the above property in matters of ownership, land use, and construction. Attached, please find a copy of the Power of Attorney or other document by which I have been appointed.

AGENCY

I/We are applying for one or more permits for development of the above property. I/We understand that the proposed work may also include additional permits for land use approvals.

For the purposes of applying for the applicable permits and managing the owner's responsibility for compliance with the approved plans and any land use permits associated with this project, I/we

☐ will act as my own agent

■ do hereby appoint Ted Burns - Seaborn Companies to act as my agent in dealing with the City of Medina in all acts and decisions related to processing the application for permit, review and approval of the application, authorization of revisions, and coordination of required inspections and project approvals.

AGREEMENT TO CONDITIONS

I/We agree as a condition of this permit:

- To comply with all applicable codes, ordinances, laws and conditions of approval in effect at time of permit issue.
- To ensure that all work shall be done in accord with the approved plans and specifications, which shall not be modified without the prior approval of the Building Official. I/We will provide all data and details of revisions to the approved plans to the City prior to undertaking any work that differs from the approved plans. The official approved plans for the project shall be those plans that are stamped and dated as approved by the City of Medina.
- To inform all contractors, subcontractors and workers of these conditions and any project mitigation requirements agreed to, and I/we will enforce compliance thereto.
- To maintain the approved plans, all correction notices, all inspection reports, and all permit documents on the project site and readily available to the inspectors.
- To ensure that requests are made to the City for the required inspections. Failure to notify the Development Services Department that the work is ready for inspection may necessitate the removal of some of the construction materials at the owner's expense in order to perform required inspections.
- To cause all certifications required by the City to be completed and to reconcile the permit fees upon completion of the work. I/We understand that the City will not issue a Certificate of Completion or a Certificate of Occupancy until these documents are completed.
- I/We acknowledge that consultant fees may be incurred as a result of the review and inspection of the proposed work. I/We agree to be responsible for the payment of these fees and understand that the payment of these fees is required prior to issuance of a Certificate of Occupancy.

SALES TAX

All contractors and vendors must report sales taxes for transactions in the City of Medina on quarterly \combined excise tax returns. The 4-digit location code for the City of Medina is 1718.

OWNER OR OFFICER/REPRESENTATIVE NAME AND SIGNATURES

I HAVE READ, UNDERSTOOD AND AGREE TO THE ABOVE REQUIREMENTS.

Signature Kathy Young **Date** January 8, 2026

Name Kathy Young

7887 OVERLAKE DR W LLC

DELEGATION OF AUTHORITY

RECITALS

A. Ohana Northwest Properties LLC, a Delaware limited liability company, is the Manager of 7887 Overlake Dr W LLC (the "Company").

B. Section 6.4 of the Limited Liability Company Agreement of the Company dated effective March 2, 2020 provides "The Manager may appoint, employ or otherwise contract with such other persons or entities for the transaction of the business of the Company or the performance of services for or on behalf of the Company as the Manager shall determine in the Manager's sole discretion. The Manager may delegate to any such officer, person or entity such authority to act on behalf of the Company as the Manager may from time to time deem appropriate in the Manager's sole discretion."

C. The Manager of the Company desires to delegate to Kathy Young all of the powers of the Manager with respect to any real property held by the Company, including but not limited to filing applications for permits, executing agreements with any municipality or third party with respect to any real property held by the Company, and all authority with respect to land use, permitting, construction, development, and maintenance of any real property held by the Company. Notwithstanding the foregoing, Kathy Young shall not have the power to sell or lease any real property held by the Company.

DELEGATION

The undersigned, Manager of the Company, pursuant to Section 6.4 of the Limited Liability Company Agreement of the Company hereby delegates to Kathy Young all of the powers of the Manager with respect to any real property held by the Company, including but not limited to filing and signing applications for permits, executing agreements with any municipality or third party with respect to any real property held by the Company, and all authroity with respect to land use, permitting, construction, development, and maintenance of any real property held by the Company. Notwithstanding the foregoing, Kathy Young shall not have the power to sell or lease any real property held by the Company.

Dated Effective: 9/9/2024

Ohana Northwest Properties LLC, Manager of
7887 Overlake Dr W LLC

Kathy Young

Kathy Young, its Manager

State of Washington
County of KING
Signed or attested before me on 9/9/2024
by Samantha Martin

(signature)
, Notary Public
My appointment expires on: 4/29/2025

SAMANTHA MARTIN
MY COMM. EXP. 04/29/2025
NOTARY
PUBLIC
COMM. #164716
STATE OF WASHINGTON

168209771.1

Exhibit 3
P-24-024 & P-24-025
7887 Overlake Drive West

Department of Revenue
Washington State

REAL ESTATE EXCISE TAX AFFIDAVIT

CHAPTER 82.45 RCW - CHAPTER 458-61A WAC

This form is your receipt when stamped by cashier.

THIS AFFIDAVIT WILL NOT BE ACCEPTED UNLESS ALL AREAS ON ALL PAGES ARE FULLY COMPLETED

Only for sales in a single location code on or after January 1, 2020.

☐ Check box if the sale occurred in more than one location code.

PLEASE TYPE OR PRINT

☐ Check box if partial sale, indicate % _____ sold.

List percentage of ownership acquired next to each name.

1 SELLER GRANTOR
Name: Steel Gear, LLC, a Washington limited liability company
Mailing Address: PO Box 400
City/State/Zip: Bellevue, WA 98009
Phone No (including area code):

2 BUYER GRANTEE
Name: 7887 Overlake Dr W LLC, a Delaware limited liability company
Mailing Address: PO Box 400
City/State/Zip: Bellevue, WA 98009
Phone No (including area code):

3 Send all property tax correspondence to ☑ Same as Buyer/Grantee
Name:
Mailing Address:
City/State/Zip:
Phone No (including area code):

List all real and personal property tax parcel account numbers - check box if personal property		List assessed value(s)
362504905807	☐	16,617,000.00
	☐	
	☐	
	☐	

4 Street address of property: 7887 Overlake Dr W, Medina, WA 98033
This property is located in Medina
☐ Check box if any of the listed parcels are being segregated from another parcel, are part of a boundary line adjustment or parcels being merged
Legal description of property (if more space is needed, you may attach a separate sheet to each page of the affidavit)
Legal description attached hereto as Exhibit A and incorporated herein by this reference.

5 Select Land Use Code(s).
11 - Household, single family units
enter any additional codes.
(See back of last page for instructions)

	YES	NO
Was the seller receiving a property tax exemption or deferral under chapters 84.36, 84.37, or 84.38 RCW (nonprofit organization, senior citizen, or disabled person, homeowner with limited income)?	☐	☑
Is this property predominantly used for timber (as classified under RCW 84.34 and 84.33) or agriculture (as classified under RCW 84.34.020)? See ETA 3215	☐	☑

6

	YES	NO
Is this property designated as forest land per chapter 84.33 RCW?	☐	☑
Is this property classified as current use (open space, farm and agricultural, or timber) land per chapter 84.34 RCW?	☐	☑
Is this property receiving special valuation as historical property per chapter 84.26 RCW?	☐	☑

If any answers are yes, complete as instructed below.

(1) NOTICE OF CONTINUANCE (FOREST LAND OR CURRENT USE)
NEW OWNER(S): To continue the current designation as forest land or classification as current use (open space, farm and agriculture, or timber) land, **you must sign on (3) below.** The county assessor must then determine if the land transferred continues to qualify and will indicate by signing below. If the land no longer qualifies or you do not wish to continue the designation or classification, it will be removed and the compensating or additional taxes will be due and payable by the seller or transferor at the time of sale (RCW 84.33.140 or RCW 84.34.108). Prior to signing (3) below, you may contact your local county assessor for more information.

This land ☐ does ☐ does not qualify for continuance

DEPUTY ASSESSOR _____ DATE _____

(2) NOTICE OF COMPLIANCE (HISTORIC PROPERTY)
NEW OWNER(S): To continue special valuation as historic property, **sign (3) below.** If the new owner(s) does not wish to continue, all additional tax calculated pursuant to chapter 84.26 RCW, shall be due and payable by the seller or transferor at the time of sale.

(3) NEW OWNER(S) SIGNATURE

PRINT NAME _____ _____

7 List all personal property (tangible and intangible) included in selling price

If claiming an exemption, list WAC number and reason for exemption:
WAC No (Section/Subsection): 458-61A-211(2)(c)
Reason for exemption:
Transfer from one wholly-owned subsidiary to another. Mere change in identity or form. No change in beneficial ownership. No consideration.

Type of Document: Statutory Warranty Deed
Date of Document: July 30, 2020

Gross Selling Price $	16,617,000.00
*Personal Property (deduct) $	
Exemption Claimed (deduct) $	16,617,000.00
Taxable Selling Price $	0.00
Excise Tax: State	
Less than $500,000.01 at 1.1% $	0.00
From $500,000.01 to $1,500,000 at 1.28% $	0.00
From $1,500,000.01 to $3,000,000 at 2.75% $	0.00
Above $3,000,000 at 3.0% $	0.00
Agricultural and timberland at 1.28% $	0.00
Total Excise Tax: State $	0.00
0.0050 Local $	0.00
*Delinquent Interest: State $	0.00
Local $	0.00
*Delinquent Penalty $	0.00
Subtotal $	0.00
*State Technology Fee $	5.00
*Affidavit Processing Fee $	5.00
Total Due $	10.00

A MINIMUM OF $10.00 IS DUE IN FEE(S) AND/OR TAX
*SEE INSTRUCTIONS

8 I CERTIFY UNDER PENALTY OF PERJURY THAT THE FOREGOING IS TRUE AND CORRECT

Signature of Grantor or Grantor's Agent: [signature]
Name (print): Steven Schindler, Agent
Date & city of signing: 7/30/20 Seattle, WA

Signature of Grantee or Grantee's Agent: [signature]
Name (print): Nisha Nariya, Agent
Date & city of signing: 7/30/2020 Seattle, WA

Perjury: Perjury is a class C felony which is punishable by imprisonment in the state correctional institution for a maximum term of not more than five years, or by a fine in an amount fixed by the court of not more than five thousand dollars ($5,000.00), or by both imprisonment and fine (RCW 9A.20.020(1C))

REV 84 0001a (12/6/19) THIS SPACE - TREASURER'S USE ONLY COUNTY TREASURER

Unofficial Copy

Exhibit A

Legal Description

THAT PORTION OF GOVERNMENT LOTS 1 AND 2, SECTION 36, TOWNSHIP 25 NORTH, RANGE 4 EAST, W.M., IN KING COUNTY, WASHINGTON, DESCRIBED AS FOLLOWS:

BEGINNING AT THE INTERSECTION OF THE SOUTHERLY LINE OF THE M.F. WIGHT ROAD "NORTHEAST 6TH STREET" AS CONDEMNED IN KING COUNTY SUPERIOR COURT CAUSE NUMBER 103872 WITH WESTERLY LINE OF EASTERLY 65.61 FEET IN WIDTH OF SAID GOVERNMENT LOT 2;
THENCE SOUTHERLY PARALLEL WITH EASTERLY LINE OF SAID GOVERNMENT LOT 2 TO MEANDER LINE OF EASTERLY SHORE OF LAKE WASHINGTON;
THENCE NORTHEASTERLY ALONG SAID MEANDER LINE TO THE EASTERLY LINE OF SAID GOVERNMENT LOT 2;

THENCE CONTINUING NORTHEASTERLY ALONG SAID MEANDER LINE 115.50 FEET;
THENCE NORTHERLY "ALONG A LINE WHICH WOULD INTERSECT A POINT 30.00 FEET SOUTH AND 1,236.38 FEET WEST, PARALLEL WITH SECTION LINE, OF NORTHEAST CORNER OF SAID GOVERNMENT LOT 1" TO SOUTHERLY LINE OF SAID M.F. WIGHT ROAD;
THENCE WESTERLY ALONG SAID SOUTHERLY LINE TO POINT OF BEGINNING.

TOGETHER WITH SECOND CLASS SHORELANDS ADJOINING.

TOGETHER WITH THE FOLLOWING DESCRIBED PARCEL AS PART OF CITY OF MEDINA LOT LINE ADJUSTMENT NO. 91-5 RECORDED UNDER AUDITOR'S FILE NO. 9111060341.

BEGINNING AT A POINT 1,236.38 FEET WEST AND 510 FEET SOUTH OF THE NORTHEAST CORNER OF GOVERNMENT LOT 1 OF SECTION 36, TOWNSHIP 25 NORTH, RANGE 4 EAST, W.M., IN KING COUNTY, WASHINGTON, SAID POINT BEING ON THE SOUTH MARGINAL LINE OF W.F. WIGHT ROAD;
THENCE SOUTH 89°02'59" EAST ALONG SAID SOUTH MARGINAL LINE OF M.F. WIGHT ROAD, 22.00 FEET;
THENCE SOUTH 00°21'59" WEST, PARALLEL WITH THE EAST LINE OF SAID GOVERNMENT LOT 1,286.50 FEET;
THENCE SOUTH 12°52'00" EAST, 61.26 FEET;

Unofficial Copy

THENCE NORTH 89°38'01" WEST, 36.02 FEET;
THENCE NORTH 00°21'59" EAST, PARALLEL WITH THE EAST LINE OF SAID GOVERNMENT LOT 1,346.36 FEET TO THE POINT OF BEGINNING.

ALSO KNOWN AS PARCEL A OF LOT LINE ADJUSTMENT NO. 91-5, RECORDED ON NOVEMBER 06, 1991 AS RECORDING NUMBER 9111060341, IN THE OFFICIAL RECORDS OF KING COUNTY, WASHINGTON.

Unofficial Copy

Exhibit 4
P-24-024 & P-24-025
7887 Overlake Drive West

Ecological No Net Loss Assessment Report

Prepared for

Shihara Residence
7887 Overlake Drive West
Medina, WA 98009

Prepared by

Northwest Environmental Consulting, LLC

Northwest Environmental Consulting, LLC
600 North 36th Street, Suite 423
Seattle, WA 98103
206-234-2520

February 2024

Purpose

The purpose of this report is to fulfill the requirements of City of Medina Municipal Code (MMC) 20.66.000 for General requirements applicable to all shoreline development and uses by assessing overall project impacts and proposed mitigation to determine if the project meets the "No Net Loss" standard.

No Net Loss is defined as "An ecological concept whereby conservation losses in one geographic or otherwise defined area are equaled by conservation gains in function in another area."

Permits are being applied for moorage improvements and a dock repair.

Code Compliance

Permits are being applied for a boat lift replacement and two additional boat lifts, dock repair, and repair of an existing canopy. The boat lifts will be placed in the deepest water possible and is an accessory to the existing pier. It is not possible to put the lifts in 9-feet of water at the site, but the minimum 5-feet of depth will be met. The dock is an established use and the proposed project will bring the decking into standards and reduce the overall footprint of the dock. The new canopy will be translucent and comply with the code.

Location

The subject property is located at 7887 Overlake Drive West in the City of Medina, Washington (parcel # 362504-9058). The parcel is on the waterfront of Lake Washington, a shoreline of the state, that contains several endangered fish species listed under the Endangered Species Act and Washington State designated priority fish species. (see Appendix A – Sheet 1.0)

Project Description

The proposed work will remove 1,274 square feet of the existing decking (1,174 square feet overwater) and replace with a ThruFlow grated decking. The existing boat lift will be replaced, and two additional boat lifts will be added near the waterward end of the dock.

The proposed work will repair the existing 212 square foot boat cover by installing a translucent, Crystallite, moorage cover. (See Appendix A – Sheet 2.0 to 6.0).

During construction, a floating boom will surround the work barge and dock. (See Appendix A – Sheet 7.0).

A shoreline vegetation plan is proposed, that will add 1 native conifer and 3 native shrubs. These shoreline plantings will provide shade and allow beneficial allochthonous material to enter the lake along the shoreline. The existing vegetation will be preserved including a willow and Western Red Cedar. (See Appendix A – Sheet 8 and 9).

Project drawings are included in Attachment A.

Approach

Northwest Environmental Consulting LLC (NWEC) biologist Brad Thiele conducted a site visit on January 16, 2024 to evaluate conditions on site and adjacent to the site. NWEC also consulted the following sources for information on potential critical fish and wildlife habitat along this shoreline:

- Washington Department of Fish and Wildlife (WDFW): Priority Habitats and Species online database (http://apps.wdfw.wa.gov/phsontheweb/)
- WDFW SalmonScape online database of fish distribution and ESA listing units (https://apps.wdfw.wa.gov/salmonscape/)

Site Description

The subject property is a shoreline tract in a residential neighborhood. It has shoreline on its southern boundary with single-family homes to the east and west along the shoreline.

The only existing structures on the property are the house and dock.

The shoreline is lawn with some ornamental shrubs and treed beds along the property lines. A mature weeping willow, paper birch, and Doug fir are present along the eastern and western property lines along the shore. The lawn borders a cobble and concrete bulkhead. A cobble and gravel beach is present during low lake level along the bulkhead. Lakebed substrates are cobble and gravel. Eurasian milfoil was present starting about 100 feet from shore.

The neighboring shorelines are landscaped similarly with docks and bulkheads. See attached photos in Appendix B- Photos.

Species Use

WDFW's PHS mapping and SalmonScape mapping tools show the following salmonid species using Lake Washington for migration and/or rearing: residential coastal cutthroat (*Oncorhynchus clarkii*), winter steelhead (*O. mykiss*), Dolly Varden/bull trout (*Salvelinus malma*), sockeye salmon (*O. nerka*), fall Chinook (*O. tshawytscha*), coho salmon (*O. kisutch*), and kokanee (*O. nerka*). The SalmonScape database maps the site as accessible to the Endangered Species Units (ESU) of Threatened Chinook and steelhead. Juveniles migrate and may rear in the waters near the project when traveling from spawning sites on other lake tributaries to the lakes system's outlet at the Hiram M. Chittenden Locks. The project site is accessible to any fish migrating or rearing in the lake.

The shoreline is not mapped as a Sockeye spawning location, sockeye spawning is mapped south of the property near the point.

Priority Habitats and Species mapping, maps a wetland about 800 feet to the east of the project.

Project Impacts and Conservation Measurements

Direct Impacts:

Sediments: Sediment disturbance may occur below the OHWM during boat lift replacement.

Care will be taken to set the boatlifts on the bottom without dragging. Additionally, the tug and barge propwash may disturb sediments temporarily when making trips to and from the site.

The project will meet state water quality standards.

Shoreline: Preserving and planting native vegetation, including native trees and shrubs, will increase the habitat functions of the shoreline by creating shade along the shoreline that will be an improvement from the existing baseline habitat conditions at the project site. These plants will provide overhanging cover for fish, structural diversity for birds and wildlife, detritus for aquatic invertebrates and long-term recruitment of woody material and other allochthonous food sources. The proposed planting plan is included (see Appendix sheet 8.0 and 9.0).

Lakebed: No pile work will occur that will change lakebed coverage. Placing the moorage as far away from shore as possible and in the deepest water possible minimizes the chance of propwash causing disturbance during castoff and docking.

Potential spills: Short-term risks include the potential for petroleum spills that can occur with any equipment operation. The risk of impact to the aquatic environment is expected to be minimized because a trained crew will be onsite that will implement spill containment measures should a spill occur. The crew will report any spills as required by permits.

Noise: Construction equipment will create noise audible to neighbors and in-water. Noise disturbance will be short-term and should have negligible effects on fish and wildlife in the area. Work will be completed during the in-water work window when juvenile fish are not expected to be present in larger numbers.

Shading: The proposal will decrease overwater coverage by 212 square feet from removal of an opaque moorage cover and replacing with a translucent moorage cover. In addition, 1,174 square feet of opaque decking will be replaced with grated ThruFlow decking.

Grated decking allows light to penetrate the waters below the dock, which can increase productivity in the water column, and reduce the full shade favored by salmonid predators. Salmonid predators are known to use hard shadowing under solid-decked docks to ambush juvenile salmonids. Reducing these hard shadows limits their ability to effectively hunt salmonids. In addition, hard shadowing may increase juvenile salmonid outmigration times when encountered along the shoreline. Using grated decking and using a transparent moorage cover will minimize this effect.

ThruFlow grated decking has a measured performance at 43 percent light penetration (ThruFlow, 2021). Thus, the increase in lighting under the pier is effectively 57% of the area of a solid decked structure. Table 1 provides a summary of effective coverage:

Table 1 – Effective coverage

	Existing solid decking	Proposed grated decking	Conversion	Effective coverage	Reduction in effective coverage
Solid decking removed (SF)	1174	1174	0.57	669	505
Moorage cover (SF)	212	0	n/a	0	0
Change	-1,386	1174		669	505

The use of grated decking at the site reduces the effective coverage of the existing structure by 505 square feet. Removing the opaque moorage cover will reduce solid overwater coverage by an additional 212 square feet.

Recreational Boating: The project supports continued recreational boating, which has been identified as a limiting factor for salmonid populations in Lake Washington. The moorage improvements will not introduce additional boating to Lake Washington, as the owners could still access the lake from a public boat launch or private moorage facility.

Other Conservation measures:

Work window: The work will be completed during the prescribed in-water work window for this area of Lake Washington (July 16 to March 15). Operating within this time frame helps protect Chinook salmon, steelhead, bull trout and other salmonid fish species by doing work when juvenile fish are not expected to be present that use the nearshore environment where the work occurs.

Best Management Practices: Applicable BMPs will be used, such as a floating boom around the in-water work area, to contain any floating debris that may escape during construction. The barge will have a perimeter containment sock to absorb oil and grease that might inadvertently wash from the barge during construction.

Hazardous material containment supplies such as spill absorbent pads and trained personnel will be required onsite during any phase of construction where machinery is in operation near surface waters.

In-lieu Fee: The shoreline on the subject property will be planted with native, overhanging vegetation. The project also requires approval from the National Marine Fisheries Service (NMFS). NMFS has developed a calculator to determine appropriate mitigation costs for proposed in-water structures in Lake Washington. This calculator has established a fund that owners can pay into if they are not willing or cannot find mitigation to offset impacts from the project. The owner is not able to complete the required mitigation at the subject property required by NMFS and the property owners will pay into the in-lieu fee program to mitigate project impacts. An in-lieu fee program is defined as follows:

> "A program involving the restoration, establishment, enhancement, and/or preservation of aquatic resources through funds paid to a governmental or non-profit natural resources management entity to satisfy compensatory mitigation requirements... Similar

to a mitigation bank, an in-lieu fee program sells compensatory mitigation credits to permittees whose obligation to provide compensatory mitigation is then transferred to the in-lieu program sponsor." (Fed. Reg. 40 CFR Part 230)

The fee has been determined using the Restoration And Permitting (RAP) Calculator for Lake Washington and will be paid to King County Water & Land Resources Division. This funding has been used to remove 350 derelict piles from the mouth of the Cedar River in Lake Washington.

Impact Minimization and Mitigation

Reasonable efforts were made to apply mitigation sequencing when altering habitats within shoreline areas. This sequence has three steps: avoidance, minimization, and mitigation.

Avoidance and Minimization

The pier is an established use and all activities are allowed by code. It is not possible to work in the lake and avoid impacts to the lake.

The lifts will be placed in the deepest water possible at the site. Placing watercraft on lifts reduces maintenance of the craft reducing chemical use and loss of sacrificial anodes that may introduce zinc to the water.

All new decking will be grated to allow light to penetrate to the water below. The existing boat canopy will be replaced with a translucent boat canopy to reduce shading of the water below the lift.

During construction, BMPs will be used to prevent construction debris from entering Lake Washington. All construction debris will be removed from the site.

Additional avoidance and minimization measures include the following:

- No floats are proposed in the nearshore;
- Artificial night lighting on and from overwater structures will be minimized by focusing the light on the pier surface (not the water), and using shades that minimize illumination of the surrounding environment and reduces glare on the water surface. The visible light emitted by an individual fixture shall not exceed 450 lumens, and the total visible light emitted by all fixtures on a pier shall not exceed 2,700 lumens.
- No new boathouses are proposed;
- No new or replaced pier skirting is proposed;
- No use of treated wood for any in-water structures or components are proposed;
- Piles will be epoxy coated steel and the smallest size and quantity practicable;
- No impact pile driving or proofing will occur;
- No galvanized coated steel will be placed below the waterline.

Mitigation Approach

The owner proposes to grate all new deck surfaces and place the new structure as far from

shore as practicable in water 8 to 10 feet deep.

The shoreline will be planted with 1 native trees and 3 native shrubs. The existing native Western red cedar, willow and serviceberry will be preserved.

In addition, the owner has opted to pay the required in-lieu fee to King County to complete the mitigation requirements as required by the National Marine Fisheries Service using the RAP process.

Shoreline Function and Values Improvements

Shoreline planting will increase the shoreline functions and values by adding a native tree and shrub buffer between the house and Lake Washington that will increase screening, filtering of runoff, and vertical and overhanging structure along the lake edge, and will provide food sources for songbirds and other native fauna that use the Lake Washington shoreline.

Proposed Mitigation

Mitigation Goals

Mitigation goals will include the following:

- Enhancement of the shoreline by planting with native plantings.

Performance Standards

Buffer plantings shall maintain a 100% survival for the first and second year and achieve at least 80% survival (6 of 7 shrubs) in years 3, 4, and 5 and meet the requirements on sheet 12 of 12 in Appendix A.

Planting Plan

Shrubs and groundcovers will be containerized or bare root. The planting layouts, details, and quantities are shown in Appendix A – Sheet 11 of 12.

Schedule and Maintenance

Plantings shall be installed in the same season or before completion of the dock construction. Watering will be required for at least the first year after planting during the summer months, and any invasive plants removed.

Maintenance and Monitoring

The owner will maintain and monitor the plantings per Sheet 8.0 of the plan set as required by the RAP program. The required report that will be sent to the Corps of Engineers, will also be sent to the City of Medina when the reports are due annually.

Conclusion

Juvenile Chinook salmon, and other salmonids, rear and migrate along the Lake Washington shoreline. Lake Washington is a Shoreline of the State.

There will be temporary impacts from noise and disturbed sediments during construction. The effects of construction will be short term. Construction disturbance will degrade ecological conditions at the site temporarily and long-term impacts will occur from maintaining an overwater structure.

The project will minimize construction effects on the environment by following the prescribed fish window and using applicable BMPs to prevent construction spills, turbidity, and floating debris from escaping the area. The construction crew will retrieve all dropped items from the bottom and dispose of them properly. The effects of construction will be short term.

The new moorage cover will use a transparent cover that will allow light to reach the water beneath and will not cause effects associated with overwater coverage. The conversion to a translucent cover will reduce overwater coverage by 212 square feet.

Overwater structures may slow juvenile salmonid outmigration times and provide habitat for predatory fish.

The use of grated decking at the site reduces the effective coverage of the repaired structure by 505 square feet. This is a reduction in effective overwater coverage may reduce predatory fish habitat and reduce the chance of juvenile salmonids from hesitating while passing under the structure.

Boatlifts reduce shading by allowing light under the boat when on the lift. In addition, boat lifts reduce boat maintenance that can add cleaning chemicals to the lake and can preserve zinc anodes. A cleaner hull on a boat also reduces drag that increase fuel use.

A shoreline planting plan will be implemented that will add 1 shore pine, and 2 native shrubs (2 species) that will provide natural shading, allochthonous food sources and will eventually be a source of woody materials that will improve shoreline conditions at the site in the long-term. The existing native vegetation will be preserved. The owner has also opted to pay into the In Lieu Fee program that will be used for conservation projects that benefit salmon in King County.

This project has been designed to meet current residential dock standards and will use Best Management Practices to reduce project impacts. The conservation measures are designed to improve ecological functions or prevent further degradation of habitat **and will result in No Net Loss of ecological functions**.

Document Preparers

Brad Thiele	Biologist	30 years of experience	Northwest Environmental Consulting, LLC (NWEC)

The conclusions and findings in this report are based on field observations and measurements and represent our best professional judgment and to some extent rely on other professional service firms and available site information. Within the limitations of project scope, budget, and seasonal variations, we believe the information provided herein is accurate and true to the best of our knowledge. Northwest Environmental Consulting does not warrant any assumptions or conclusions not expressly made in this report, or based on information or analyses other than what is included herein.

References

King County. 2024. King County iMap. Online database. Accessed January 2024 at https://gismaps.kingcounty.gov/iMap/

Washington Department of Fish and Wildlife (WDFW). 2024. Priority Habitats and Species. Online database. Accessed January 2024 at http://apps.wdfw.wa.gov/phsontheweb/

WDFW. 2024. SalmonScape. Online database. Accessed January 2024 at http://apps.wdfw.wa.gov/salmonscape/

Appendix A:
Project Drawings

SITE PLAN

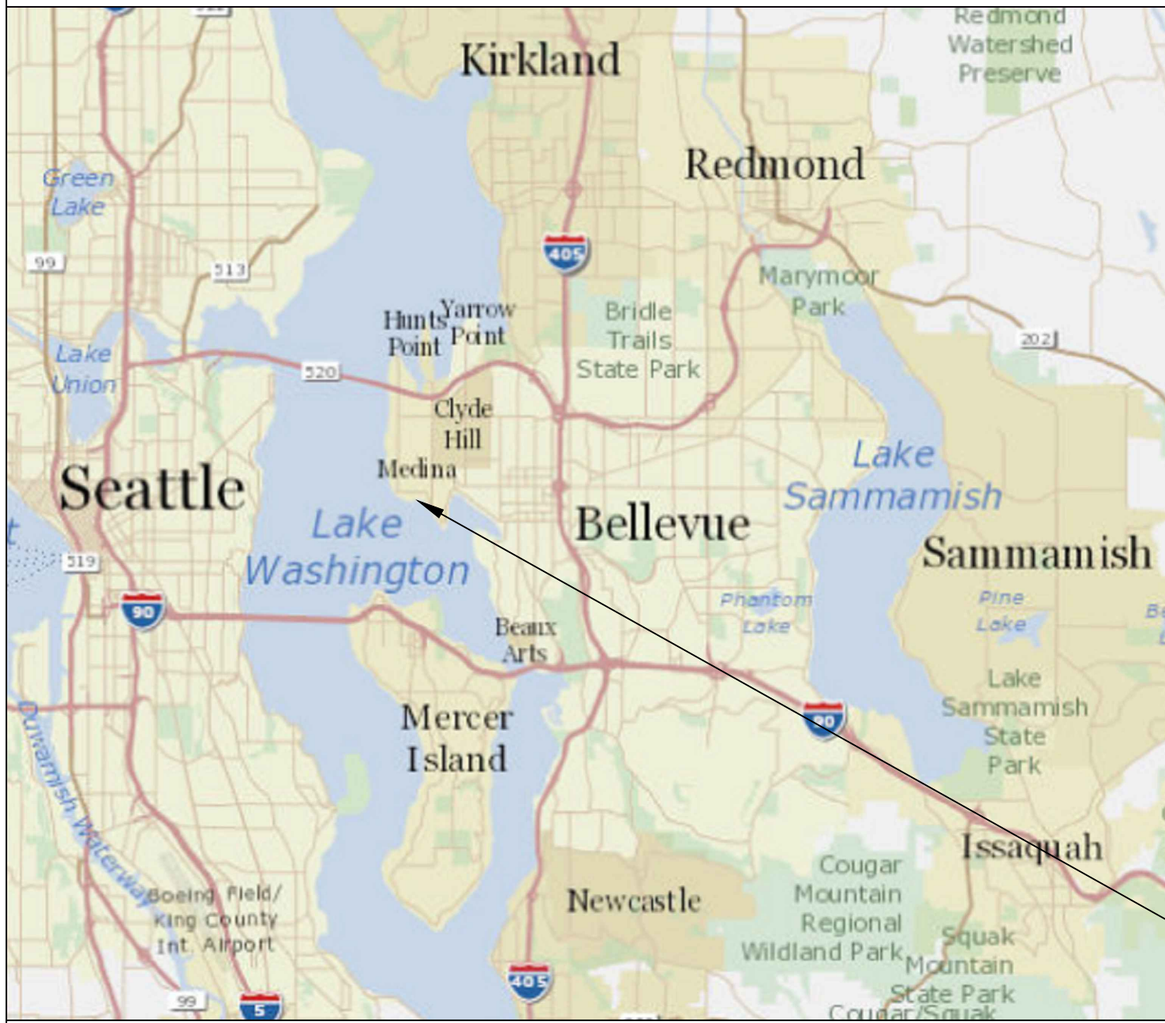

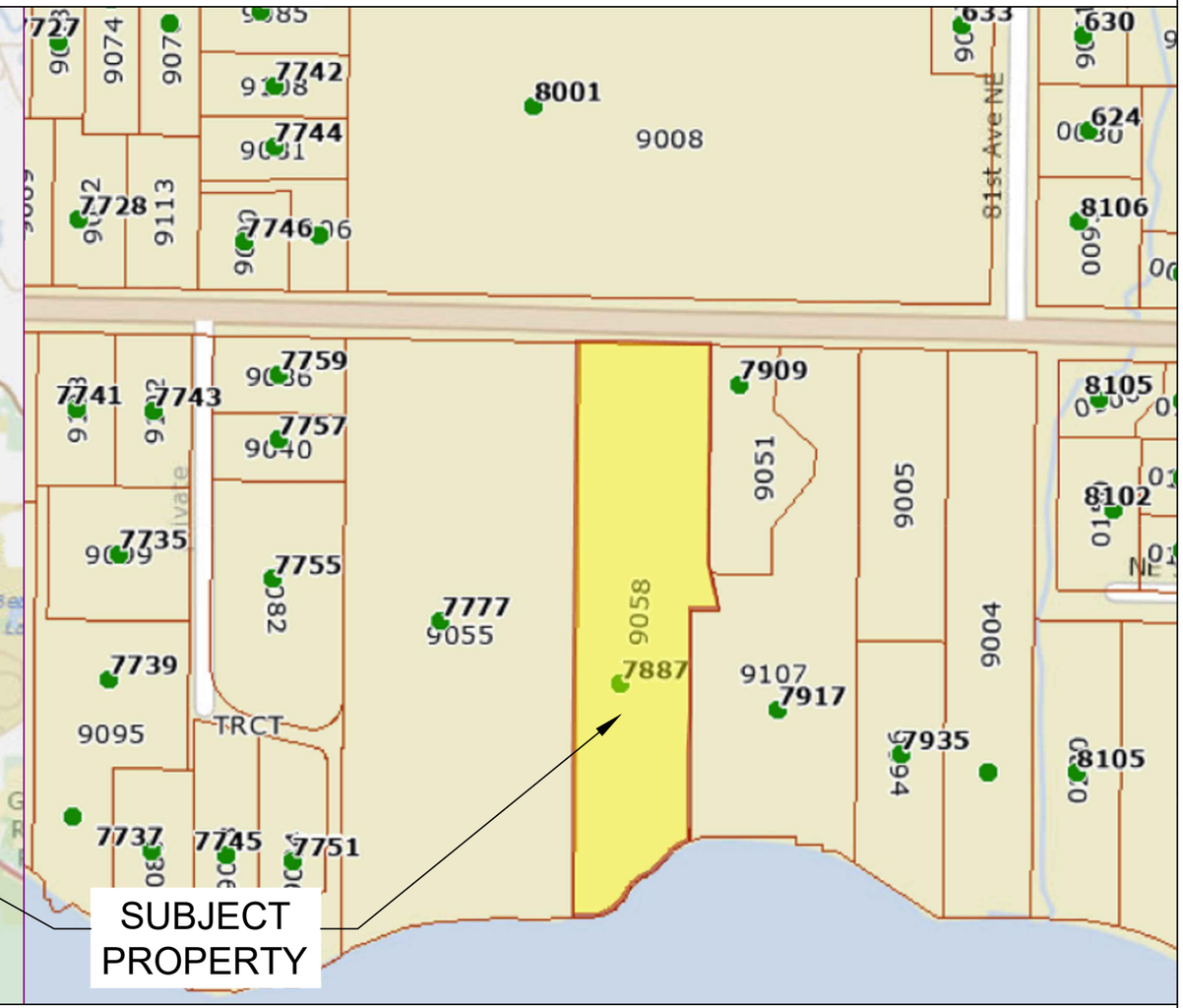

Pin: 362504-9058

Legal Description: POR OF GL'S 1 & 2 OF SD SEC DAF - BEG AT NXN OF SLY LN NE 6 TH ST & W LN OF ELY 65.61 FT OF SD GL 2 TH SLY PLW ELY LN OF SD GL 2 TO MEANDER LN OF ELY SH OF LK WA TH NELY ALG SD MEANDER LN TO ELY LN OF SD GL 2 TH CONT NELY ALG SD MEANDER LN 115.50 FT TH NLY ALG A LN WCH NXN AAP 30 FT S & 1236.38 FT W PLW SEC LN OF NE COR OF SD GL 1 TO SLY LN OF SD NE 6 TH ST TH WLY ALG SD SLY LN TO TPOB TGW POR BAAP 1236.38 FT W & 510 FT S OF NE COR OF GL 1 SD PT BEING ON S MGN OF NE 6TH ST TH S 89-02-59 E ALG SD S MGN 22 FT TH S 00-21-59 W PLW E LN OF GL 1 286.50 FT TH S 12-52-00 E 61.26 FT TH N 89-38-01 W 36.02 FT TH N 00-21-59 E PLW E LN OF SD GL 1 346.36 FT TO POB TGW 2ND CLASS SHORE LANDS ADJ AKA PAR A OF MEDING LLA #91-5 PER REC #911106-0341

Plat Block:
Plat Lot:

Parcel	Dock
LAT: 47.61513	LAT: 47.614011
LONG: -122.23338	LONG: -122.233669

County: King County
Location: Lake Washington

Applicant: Shihara Residence
7887 Overlake Dr
Medina, WA 98009

Created: 11/01/23

Last Updated: 12/27/2023 2:18 PM Leymar

Datum: CORPS OF ENGINEERS 1919
NE Quarter Of Section 36, Township 25, Range 04

Adjacent Owners:
BROTMAN SUSAN R
7917 OVERLAKE DR W 98039
BLUE WATER REALTY LLC
7777 OVERLAKE DR W 98039

BUILT BY SEABORN · ESTD 1947 ·

Seaborn Pile Driving
1080 W Ewing St
Seattle, WA 98119

Office: 206-236-1700 ext. 5
www.seabornpiledriving.com

Scope of Work: We propose to repair the existing dock, replace (1) existing boat lift, install (2) boat lifts, and repair the existing moorage cover.

SHEET 1.0

NWS-2023-XXX
PAGE 1 OF 13

GENERAL NOTES:

MATERIALS SPEC LIST:

Boat Lifts: Aluminum
SL10014ARW - 108" x 141"

Moorage Cover:
* Repaired cover will be constructed with translucent material

Decking Material: FRPP - Fiberglass reinforced polypropylene
Light permeable percentage:
* Surface - 43%
* 18" Dock Height - 61%

Sewer:
* All sewer is field verified by probing the lake bed manually during the allowed work windows for the area.

Preservatives
* Structural Glued Laminated timber shall be alaskan cedar AC.AC. 20f-V12
* Wood Shall be seasoned dry with a maximum moisture content of 19%
* Preservative treated wood shall conform to the american wood protection association (AWP) UC4A. All wood shall bear a treatment identification mark by the certifying agency.

CODE REFERENCES: Medina

We are applying for the permit to be reviewed under the:

16.65.60. - Repair and maintenance of overwater structures.

20.65.120 - Boatlifts

BUILT BY SEABORN · ESTD 1947 ·

Seaborn Pile Driving
1080 W Ewing St
Seattle, WA 98119

Office: 206-236-1700 ext. 5
www.seabornpiledriving.com

Scope of Work: We propose to repair the existing dock, replace (1) existing boat lift, install (2) boat lifts, and repair the existing moorage cover.

County: King County
Location: Lake Washington

Applicant: Shihara Residence
7887 Overlake Dr
Medina, WA 98009

Created: 11/01/23

Last Updated: 12/27/2023 2:18 PM Leymar

Datum: CORPS OF ENGINEERS 1919
NE Quarter Of Section 36, Township 25, Range 04

Adjacent Owners:
BROTMAN SUSAN R
7917 OVERLAKE DR W 98039
BLUE WATER REALTY LLC
7777 OVERLAKE DR W 98039

SHEET 2.0

EXISTING CONDITIONS

CLEAN UP LAKE AROUND PROJECT

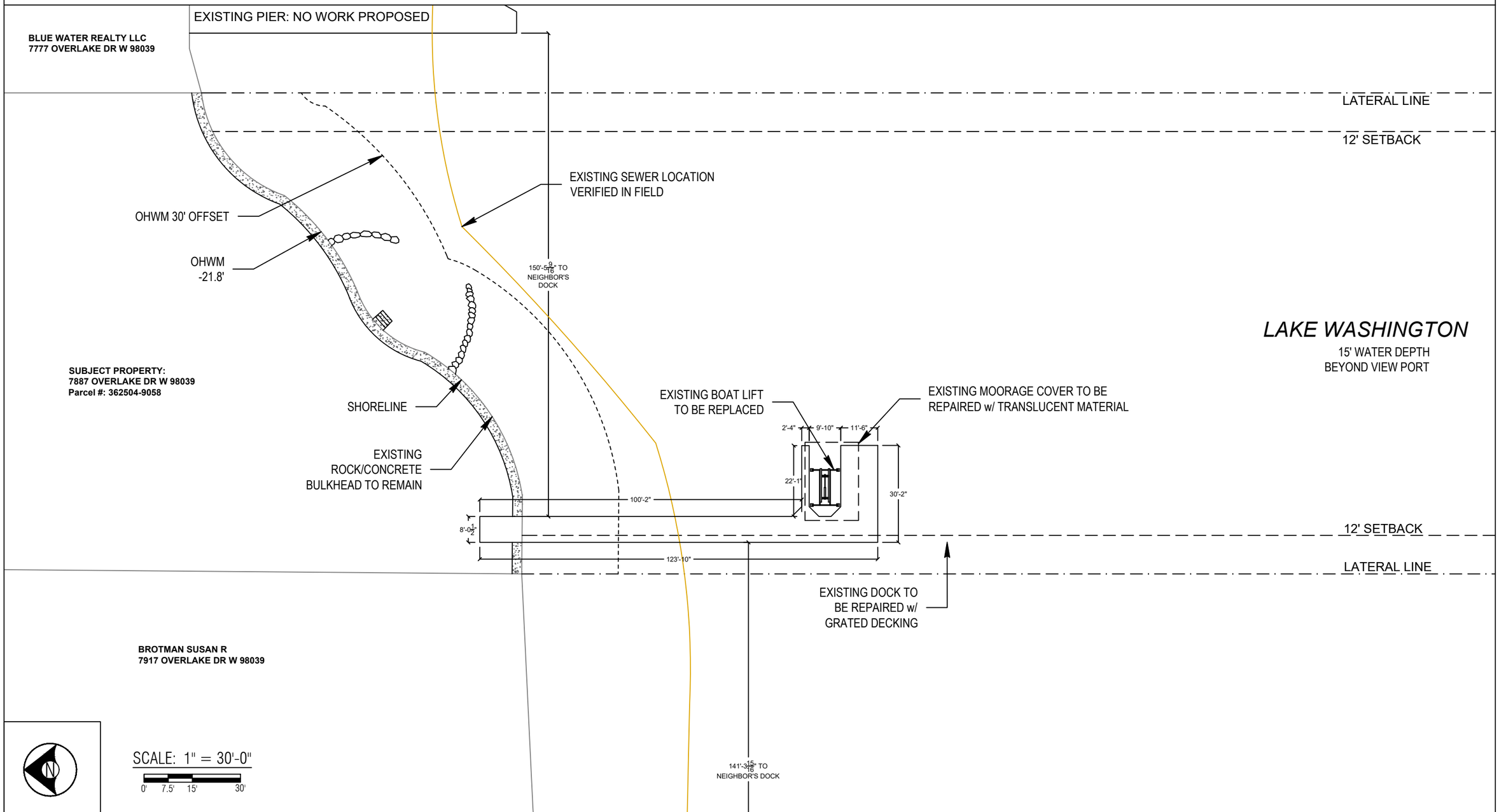

County: King County
Location: Lake Washington

Applicant: Shihara Residence
7887 Overlake Dr
Medina, WA 98009

Created: 11/01/23

Last Updated: 12/27/2023 2:18 PM Leymar

Datum: CORPS OF ENGINEERS 1919
NE Quarter Of Section 36, Township 25, Range 04

Adjacent Owners:
BROTMAN SUSAN R
7917 OVERLAKE DR W 98039
BLUE WATER REALTY LLC
7777 OVERLAKE DR W 98039

BUILT BY SEABORN · ESTD 1947 ·

Seaborn Pile Driving
1080 W Ewing St
Seattle, WA 98119

Office: 206-236-1700 ext. 5
www.seabornpiledriving.com

Scope of Work: We propose to repair the existing dock, replace (1) existing boat lift, install (2) boat lifts, and repair the existing moorage cover.

SHEET
3.0

PROPOSED CONDITIONS

CLEAN UP LAKE AROUND PROJECT

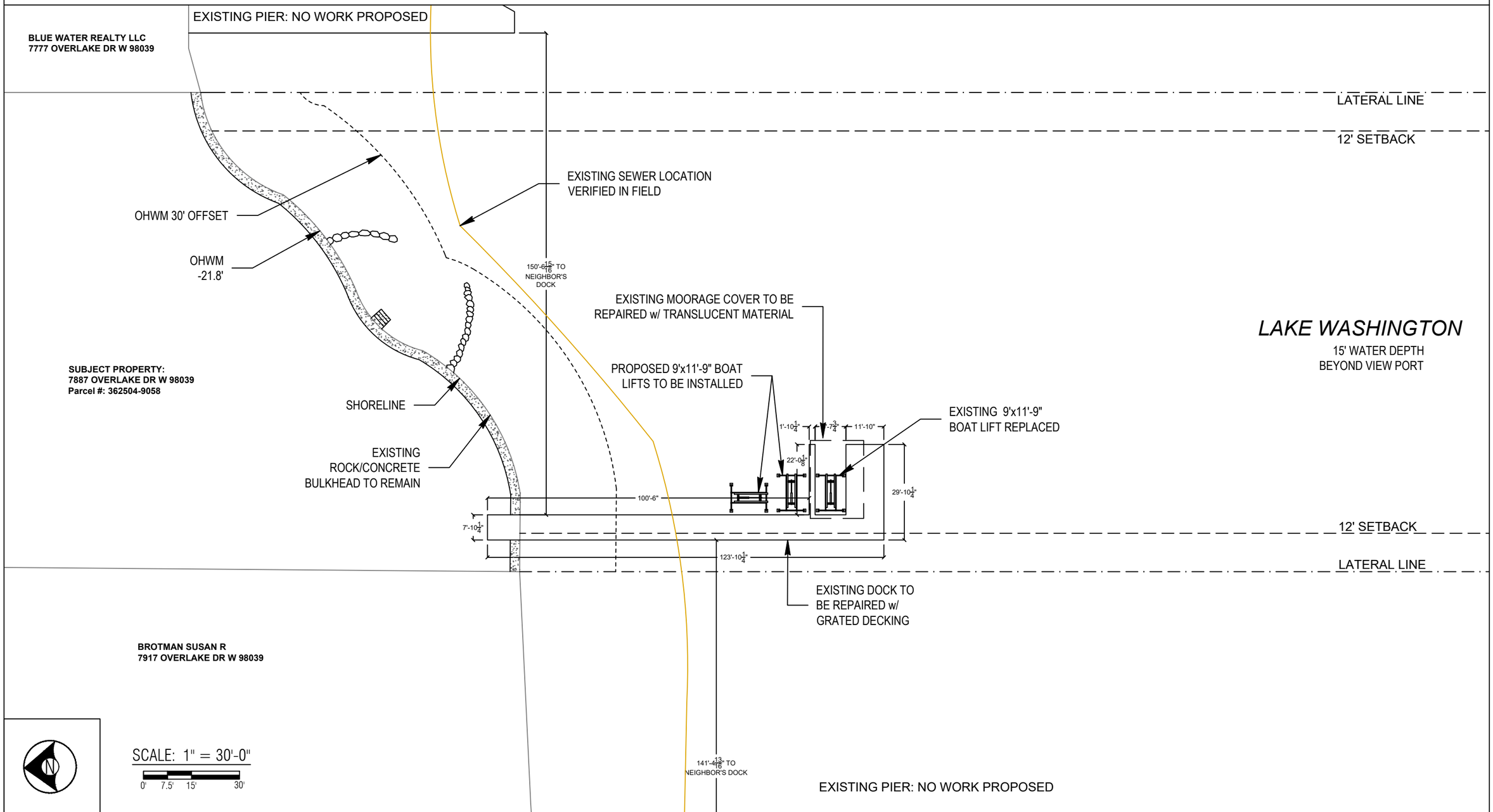

County: King County
Location: Lake Washington

Applicant: Shihara Residence
7887 Overlake Dr
Medina, WA 98009

Created: 11/01/23

Last Updated: 12/27/2023 2:18 PM Leymar

Datum: CORPS OF ENGINEERS 1919
NE Quarter Of Section 36, Township 25, Range 04

Adjacent Owners:
BROTMAN SUSAN R
7917 OVERLAKE DR W 98039
BLUE WATER REALTY LLC
7777 OVERLAKE DR W 98039

BUILT BY SEABORN · ESTD 1947 ·

Seaborn Pile Driving
1080 W Ewing St
Seattle, WA 98119

Office: 206-236-1700 ext. 5
www.seabornpiledriving.com

Scope of Work: We propose to repair the existing dock, replace (1) existing boat lift, install (2) boat lifts, and repair the existing moorage cover.

SHEET
4.0

NWS-2023-XXX
PAGE 4 OF 13

PIER DETAILS - EXISTING/PROPOSED PLAN VIEW

LEGEND

○ (26) EXISTING PILES - NO WORK TO BE DONE

Existing Pier Overwater: 1,235 sqft
Existing Pier total: 1,316 sqft

Repaired Pier Overwater: 1,174 sqft
Repaired Pier total: 1,274 sqft

**Grated decking is 43% light permeable

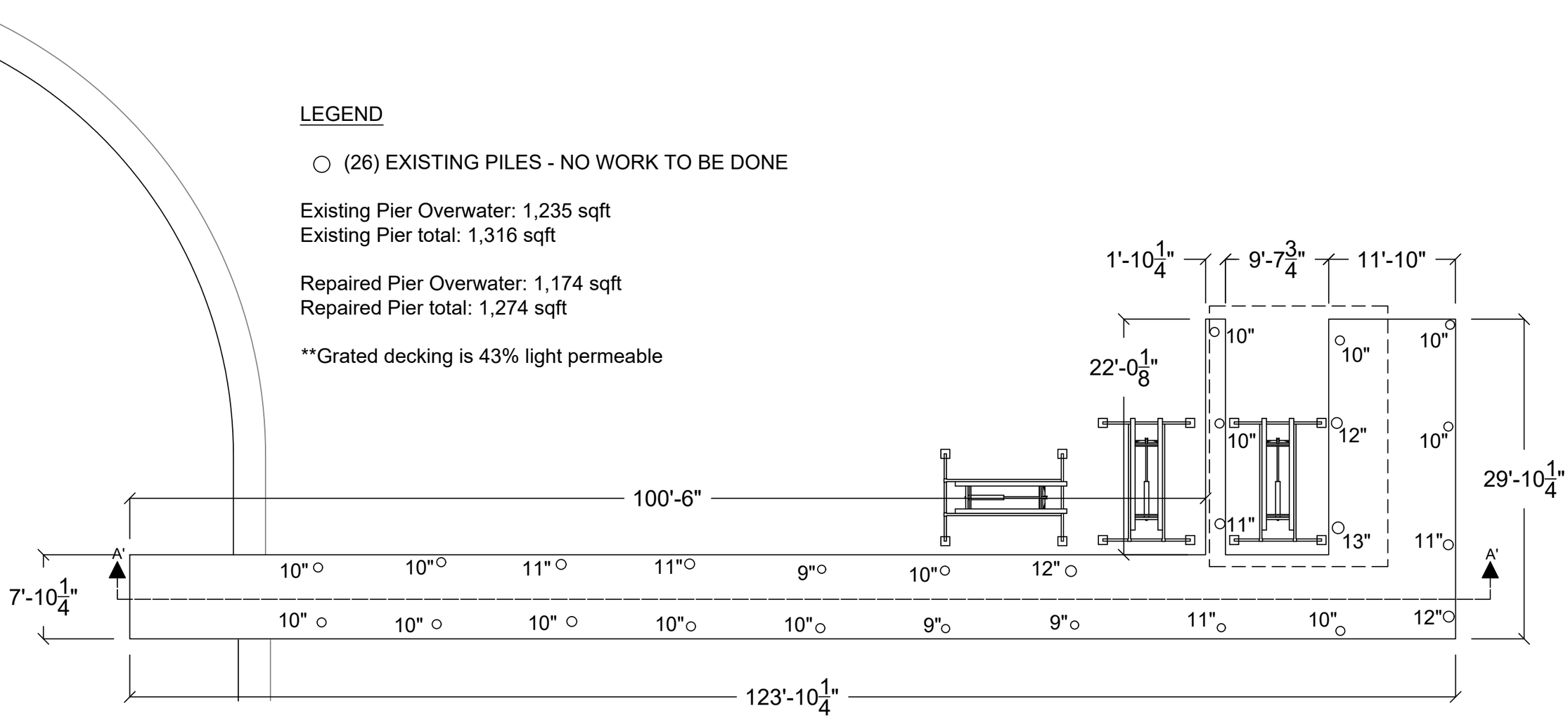

PLAN VIEW

County: King County
Location: Lake Washington

Applicant: Shihara Residence
7887 Overlake Dr
Medina, WA 98009

Created: 11/01/23

Last Updated: 12/27/2023 2:18 PM Leymar

Datum: CORPS OF ENGINEERS 1919
NE Quarter Of Section 36, Township 25, Range 04

Adjacent Owners:
BROTMAN SUSAN R
7917 OVERLAKE DR W 98039
BLUE WATER REALTY LLC
7777 OVERLAKE DR W 98039

BUILT BY SEABORN · ESTD 1947 ·

Seaborn Pile Driving
1080 W Ewing St
Seattle, WA 98119

Office: 206-236-1700 ext. 5
www.seabornpiledriving.com

Scope of Work: We propose to repair the existing dock, replace (1) existing boat lift, install (2) boat lifts, and repair the existing moorage cover.

SHEET 5.0

NWS-2023-XXX
PAGE 5 OF 13

PIER DETAILS EXISTING/PROPOSED - SECTION VIEW

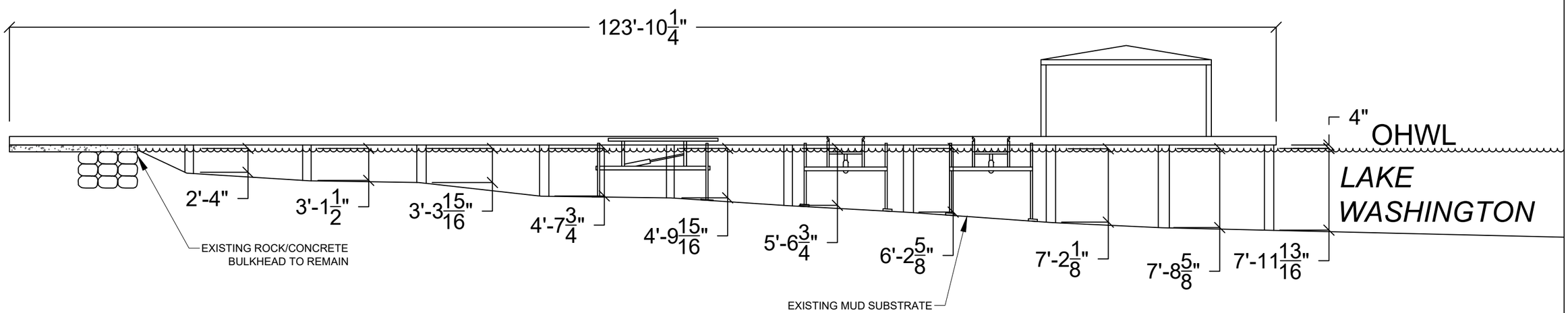

SECTION VIEW: A'-A'

Seaborn Pile Driving
1080 W Ewing St
Seattle, WA 98119

Office: 206-236-1700 ext. 5
www.seabornpiledriving.com

Scope of Work: We propose to repair the existing dock, replace (1) existing boat lift, install (2) boat lifts, and repair the existing moorage cover.

County: King County
Location: Lake Washington

Applicant: Shihara Residence
7887 Overlake Dr
Medina, WA 98009

Created: 11/01/23
Last Updated: 12/27/2023 2:18 PM Leymar

Datum: CORPS OF ENGINEERS 1919
NE Quarter Of Section 36, Township 25, Range 04

Adjacent Owners:
BROTMAN SUSAN R
7917 OVERLAKE DR W 98039
BLUE WATER REALTY LLC
7777 OVERLAKE DR W 98039

SHEET 6.0

NWS-2023-XXX
PAGE 6 OF 13

BMP INFORMATION

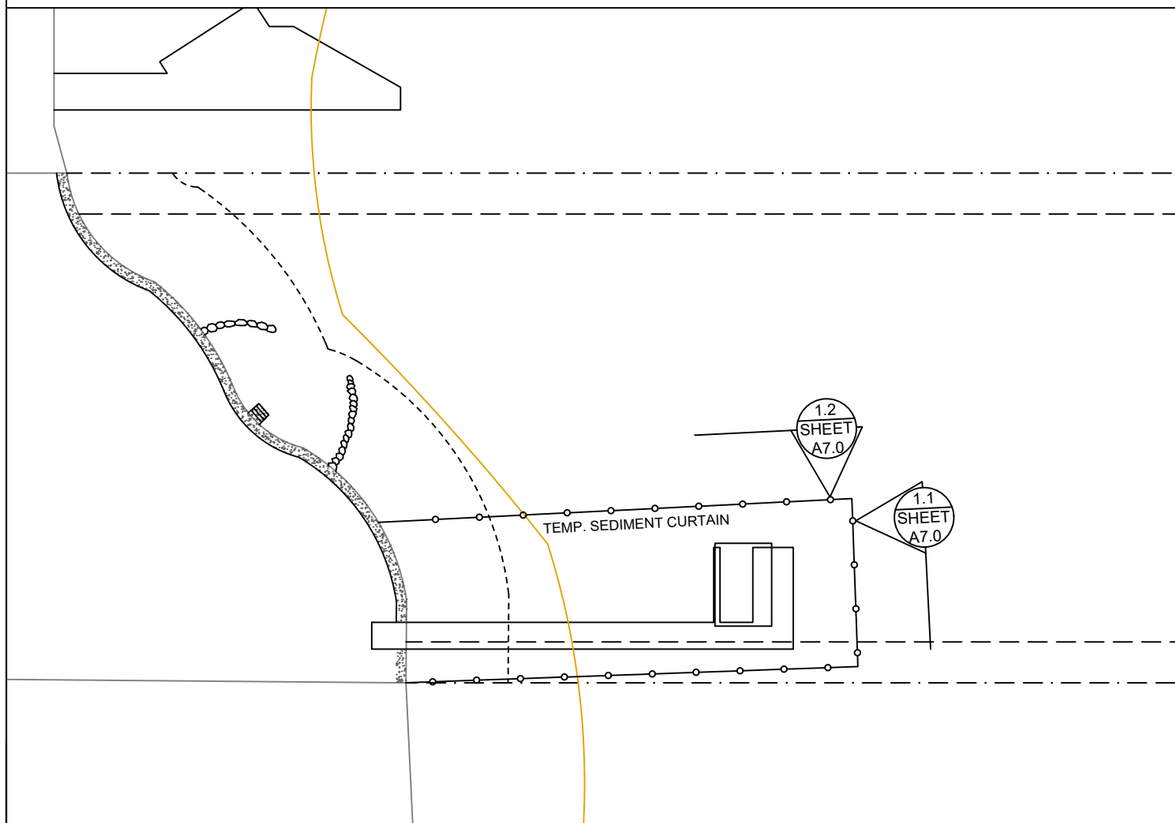

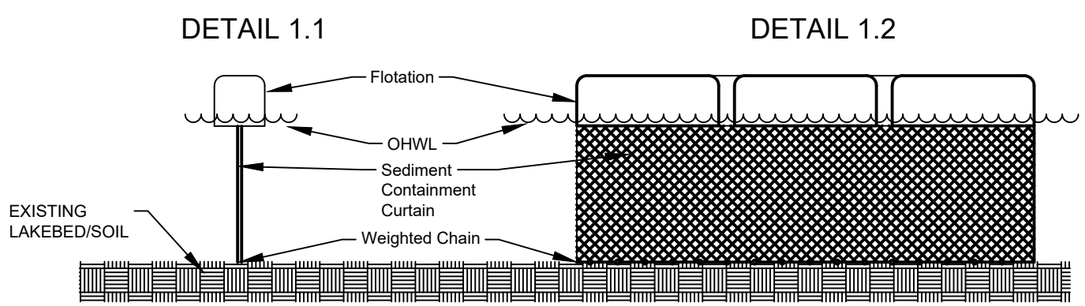

DETAIL 1.1 & 1.2

BMP NOTES:

A. Constant vigilance shall be kept for the presence of protected fish species during all aspects of the proposed action, particularly during in-water activities such as vessel movement, deployment of anchors & spuds, pile driving, dredging, and placement of gravels and other fill.

1. The project manager shall designate an appropriate number of competent observers to survey the project site and adjacent areas for protected species, including the presence of fish as conditions allow.
2. Visual surveys shall be made prior to the start of work each day, and prior to resumption of work following any break of more than an hour. Periodic additional visual surveys throughout the work day are strongly recommended.
3. All in-water work shall be done during the in-water work window for the waterbody. Where there is a difference between the USCOE and WDFW work windows, the overlap of the two shall apply.
4. All pile driving and extraction shall be postponed or halted when obvious aggregations or schooling of fish are observed within 50 yards of that work, and shall only begin/resume after the animals have voluntarily departed the area.
5. When piloting vessels, vessel operators shall operate at speeds and power settings to avoid grounding vessels, and minimize substrate scour and mobilization of bottom sediments.

B. No contamination of the marine environment shall result from project-related activities.

1. Appropriate materials to contain and clean potential spills shall be stored and readily available at the work site and/or aboard project-related vessels.
2. The project manager and heavy equipment operators shall perform daily pre-work equipment inspections for cleanliness and leaks. All heavy equipment operations shall be postponed or halted should a leak be detected, and shall not proceed until the leak is repaired and the equipment is cleaned.
3. To the greatest extent practicable, utilize biodegradable oils for equipment that would be operated in or near water.
4. Fueling of land-based vehicles and equipment shall take place at least 50 feet away from the water, preferably over an impervious surface. Fueling of vessels shall be done at approved fueling facilities.
5. Turbidity and siltation from project-related work shall be minimized and contained through the appropriate use of erosion control practices, effective silt containment devices, and the curtailment of work during adverse weather and tidal/flow conditions.
6. All wastes shall be collected and contained for proper disposal at approved upland disposal sites appropriate for the material(s).
7. When removing piles and other similarly treated wood, containment curtain must fully enclose the work area. Wood debris, oils, and any other materials released into lake waters must be collected, removed, and properly disposed of at approved disposal sites.
8. All in- and over-water wood cutting would be limited to the minimum required to remove the subject wood component, and all cutting work should be enclosed within floating containment curtain.
9. When removing piles, no actions shall be taken that would cause adhering sediments to return to lake waters.
10. Above-water containment shall be installed around removed piles to prevent sediment laden waters from returning to lake waters.
11. Construction staging (including stocking of materials, etc.) will occur on the supply barge.
12. All Exposed wood to be used on the project will be treated with a an agency approved treatment.

BUILT BY SEABORN · ESTD 1947 ·

Seaborn Pile Driving
1080 W Ewing St
Seattle, WA 98119

Office: 206-236-1700 ext. 5
www.seabornpiledriving.com

Scope of Work: We propose to repair the existing dock, replace (1) existing boat lift, install (2) boat lifts, and repair the existing moorage cover.

County: King County
Location: Lake Washington

Applicant: Shihara Residence
7887 Overlake Dr
Medina, WA 98009

Created: 11/01/23
Last Updated: 12/27/2023 2:18 PM Leymar

Datum: CORPS OF ENGINEERS 1919
NE Quarter Of Section 36, Township 25, Range 04

Adjacent Owners:
BROTMAN SUSAN R
7917 OVERLAKE DR W 98039
BLUE WATER REALTY LLC
7777 OVERLAKE DR W 98039

SHEET
7.0

MITIGATION PLAN

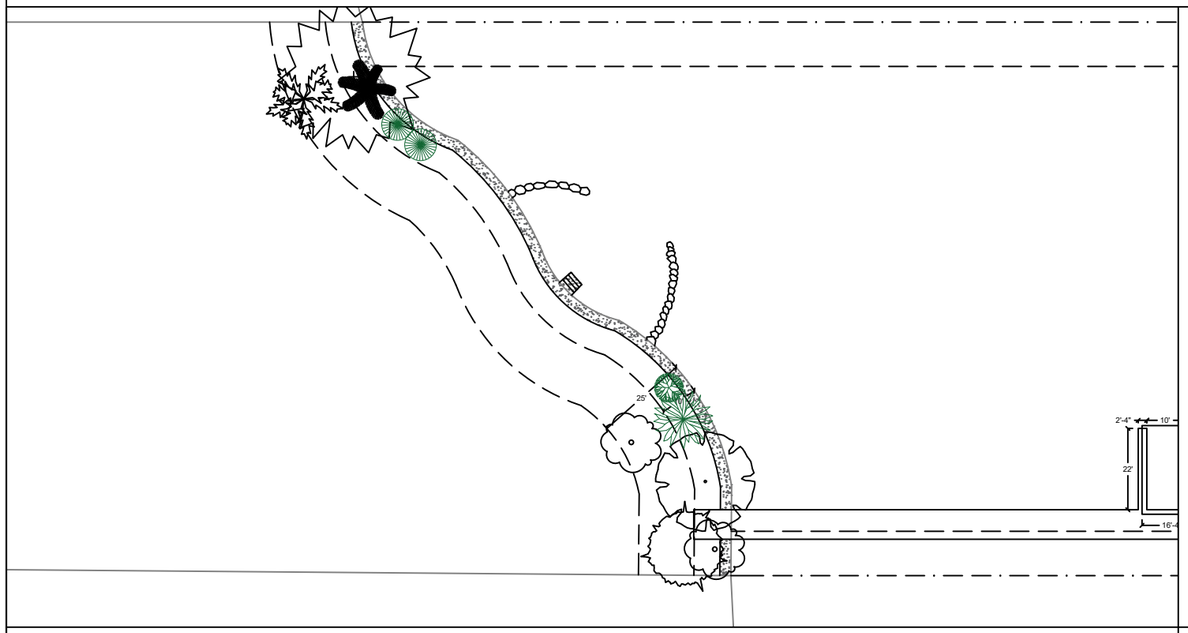

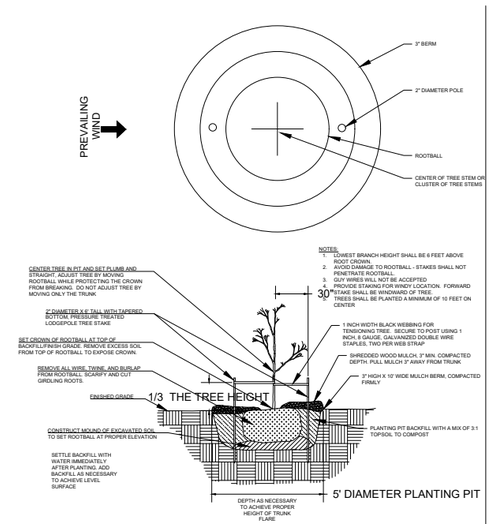

TREE PLANTING DETAILS (NTS)

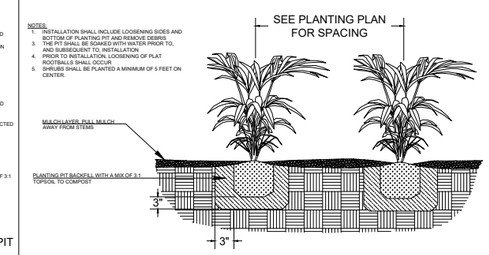

SHRUB AND GROUNDCOVER PLANTING DETAILS (NTS)

Notes:

1.The property owner shall implement and abide by the shoreline planting plan, including the installation of the identified species, in the identified locations. Shrubs shall be planted at least five feet on center, and trees shall be planted at least ten feet on center.

2.For best plant survival, planting should be completed the first October through March period concurrent with or immediately following the work authorized by this permit. A report, as-built drawing and photographs demonstrating the plants have been installed or a report on the status of project construction will be submitted to the U.S. Army Corps of Engineers, Seattle District, Regulatory Branch, within 12 months from the date of permit issuance. This reporting requirement may be met by completing and submitting a U.S. Army Corps of Engineers approved Report for Mitigation Work Completion form.

3.The property owner shall preserve in good health 100% of shoreline planting plan vegetation for as long as the structures that have been permitted under the RAP program remain in place. Plants that die must be replaced with the appropriate plant type (i.e. tree for tree, shrub for shrub) from the RAP Plant List.

4.The property owner shall monitor the survival of shoreline planting plan vegetation for five years (Monitoring Years 1-5) after the U.S. Army Corps of Engineers accepts the as-built report. The property owner shall also submit annual monitoring reports to the U.S. Army Corps of Engineers each year during this period. Each annual monitoring report will include written and photographic documentation that the performance standards are being met, including documentation of plant mortality and replacement. Photos will be taken from established points and used repeatedly for each monitoring year. In addition to photos at designated points, photo documentation will include a panoramic view of the entire planting area. Submitted photos will be formatted on standard 8 1/2 x 11" paper, dated with the date the photo was taken, and clearly labeled with the direction from which the photo was taken. The photo location points will be identified on an appropriate drawing. Annual shoreline planting monitoring reports will be submitted to the U.S. Army Corps of Engineers, Seattle District, Regulatory Branch, by November 31 of each monitoring year. This reporting requirement may be met by completing and submitting a U.S. Army Corps of Engineers approved Mitigation Planting Monitoring Report form.

PROPOSED PLANTING SPECIES/QUANTITIES

SYMBOL	LATIN NAME	COMMON NAME	QTY	SIZE
	Pinus contorta v contorta	Shore pine	1	3 ft
	Rosa nutkana	Nootka Rose	1	1 Gallon
	Philadelphus lewisii	Mock Orange	2	1 Gallon

PLANTS: Shrubs to be installed 5ft on center and trees to be installed 10ft on center.

BUILT BY SEABORN · ESTD 1947 ·

Seaborn Pile Driving
1080 W Ewing St
Seattle, WA 98119

Office: 206-236-1700 ext. 5
www.seabornpiledriving.com

Scope of Work: We propose to repair the existing dock, replace (1) existing boat lift, install (2) boat lifts, and repair the existing moorage cover.

County: King County
Location: Lake Washington

Applicant: Shihara Residence
7887 Overlake Dr
Medina, WA 98009

Created: 11/01/23
Last Updated: 12/27/2023 2:18 PM Leymar

Datum: CORPS OF ENGINEERS 1919
NE Quarter Of Section 36, Township 25, Range 04

Adjacent Owners:
BROTMAN SUSAN R
7917 OVERLAKE DR W 98039
BLUE WATER REALTY LLC
7777 OVERLAKE DR W 98039

SHEET 8.0

EXISTING PLANT PLAN

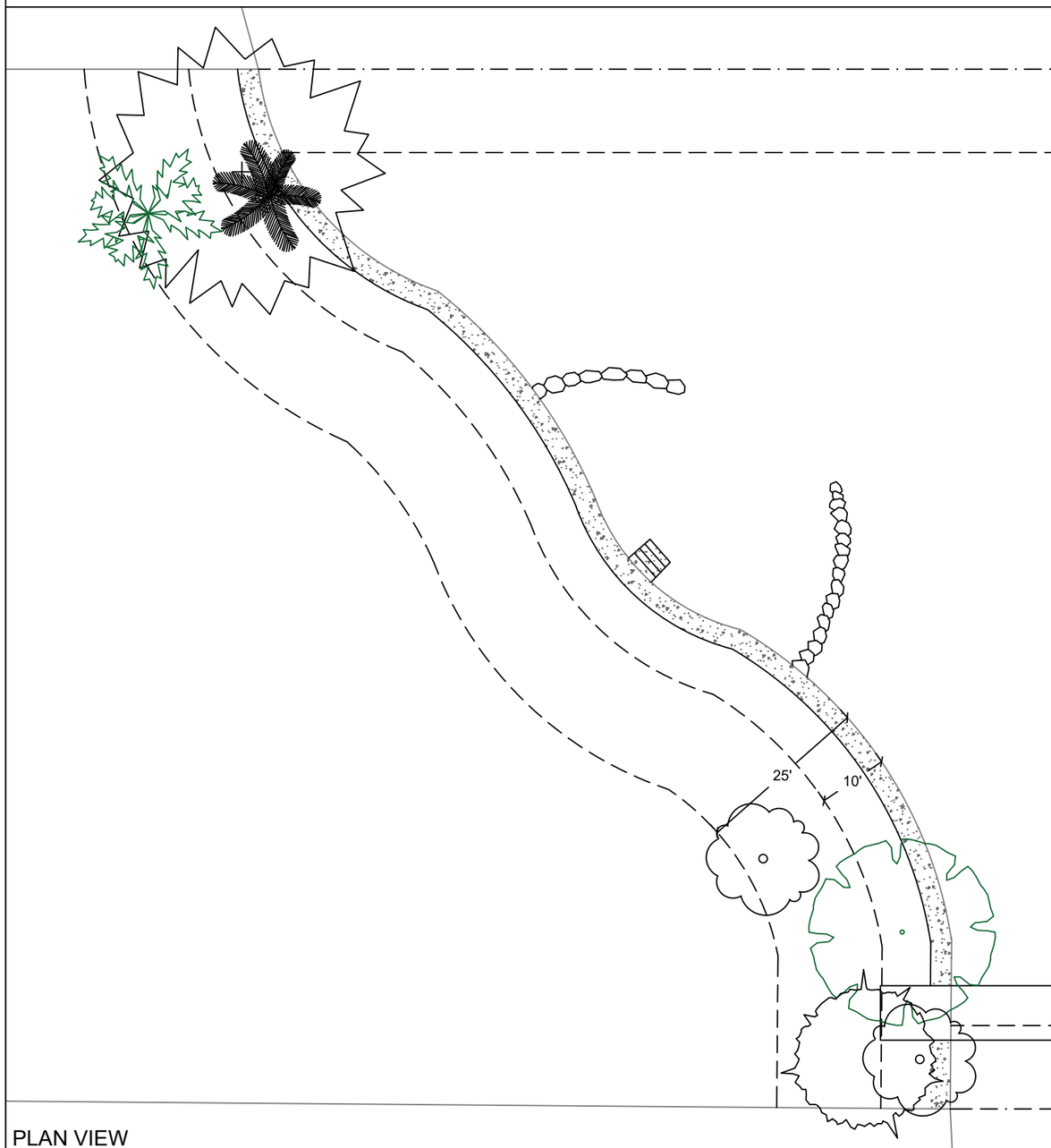

PLAN VIEW

EXISTING PLANTING SPECIES/QUANTITIES

SYMBOL	SCIENTIFIC NAME	COMMON NAME	QTY	SIZE
	Betula pendula	Silver Birch	1	~20 ft
	Hydrangea macrophylla	Bigleaf Hydrangea	2	varies
	Salix salicaceae	Salix Willow	1	~ 20ft
	Thuja plicata	Western Red Cedar	1	~ 40ft
	Nyssa sylvatica	Black Gum Tree	1	~ 20ft
	Amelanchier arborea	Common Serviceberry	1	~ 15ft

REQUESTING CREDIT OF (1) WESTERN RED CEDAR

EXISTING PLANTS TABLE

County: King County
Location: Lake Washington

Applicant: Shihara Residence
7887 Overlake Dr
Medina, WA 98009

Created: 11/01/23

Last Updated: 12/27/2023 2:18 PM Leymar

Datum: CORPS OF ENGINEERS 1919
NE Quarter Of Section 36, Township 25, Range 04

Adjacent Owners:
BROTMAN SUSAN R
7917 OVERLAKE DR W 98039
BLUE WATER REALTY LLC
7777 OVERLAKE DR W 98039

BUILT BY SEABORN · ESTD 1947 ·

Seaborn Pile Driving
1080 W Ewing St
Seattle, WA 98119

Office: 206-236-1700 ext. 5
www.seabornpiledriving.com

Scope of Work: We propose to repair the existing dock, replace (1) existing boat lift, install (2) boat lifts, and repair the existing moorage cover.

SHEET 9.0

GENERAL ENGINEERING NOTES:

GENERAL

1. ALL CONSTRUCTION SHALL CONFORM TO THESE PLANS.
2. CONTRACTOR SHALL VERIFY ALL LEVELS, DIMENSIONS, AND EXISTING CONDITIONS IN THE FIELD BEFORE PROCEEDING. CONTRACTOR SHALL NOTIFY THE ENGINEER OF ANY DISCREPANCIES OR FIELD CHANGES PRIOR TO INSTALLATION OR FABRICATION. IN CASE OF DISCREPANCIES BETWEEN THE EXISTING CONDITIONS AND THE DRAWINGS, THE CONTRACTOR SHALL OBTAIN DIRECTION FROM THE ENGINEER BEFORE PROCEEDING. DIMENSIONS NOTED AS PLUS OR MINUS (±) OR REF INDICATE UNVERIFIED DIMENSIONS AND ARE APPROXIMATE. NOTIFY ENGINEER IMMEDIATELY OF CONFLICTS OR EXCESSIVE VARIATIONS FROM INDICATED DIMENSIONS, NOTED DIMENSIONS TAKE PRECEDENCE OVER SCALED DIMENSIONS – DO NOT SCALE DRAWINGS. DIMENSIONS OF EXISTING CONDITIONS ARE BASED ON RECORD DRAWINGS AND ARE TO BE FIELD-VERIFIED BY THE CONTRACTOR.
3. CONTRACTOR SHALL PROVIDE ADEQUATE SHORING AND BRACING OF ALL STRUCTURAL MEMBERS AND EXISTING MEMBERS, AS REQUIRED, AND IN A MANNER SUITABLE TO WORK SEQUENCE. TEMPORARY SHORING AND BRACING SHALL NOT BE REMOVED UNTIL ALL FINAL CONNECTIONS HAVE BEEN COMPLETED IN ACCORDANCE WITH THE DRAWINGS AND MATERIALS HAVE ACHIEVED DESIGN STRENGTH.
4. CONTRACTOR SHALL BE RESPONSIBLE FOR ALL SAFETY PRECAUTIONS AND THE METHODS, TECHNIQUES, SEQUENCES AND PROCEDURES REQUIRED TO PERFORM THE WORK.
5. ALL MATERIALS SHALL BE NEW, UNO.
6. ALL WORK SHALL BE PERFORMED IN STRICT ACCORDANCE WITH THE DRAWINGS, NOTES, AND MANUFACTURER RECOMMENDATIONS. IF THERE ARE ANY CONFLICTS BETWEEN THESE DOCUMENTS, THE ENGINEER SHALL BE CONTACTED FOR DIRECTION.
7. THE CONTRACTOR SHALL CAREFULLY DECONSTRUCT EXISTING ELEMENTS AS NECESSARY TO ACCESS THE WORK AREAS. SUCH DECONSTRUCTION MAY INCLUDE, INTERIOR AND EXTERIOR FINISHES. ALL DECONSTRUCTION ELEMENTS SHALL BE RECONSTRUCTED TO MATCH THE ORIGINAL APPEARANCE AND MEET THE REQUIREMENTS OF THE INTERNATIONAL BUILDING CODE.
8. ALL MOORAGE COVERS AND LIFTS SHALL BE FREESTANDING AND SHALL NOT BE ATTACHED TO THE DOCK, UNLESS NOTED OTHERWISE.

CODES AND STANDARDS

1. ALL METHODS AND MATERIALS SHALL CONFORM TO THE INTERNATIONAL BUILDING CODE, 2018 EDITION.
2. AMERICAN SOCIETY OF CIVIL ENGINEERS (ASCE) STANDARD 7-16 MINIMUM DESIGN LOADS FOR BUILDINGS AND OTHER STRUCTURES.
3. WOOD WORK SHALL CONFORM TO THE NATIONAL DESIGN SPECIFICATION (NDS) 2018 EDITION.
4. AMERICAN SOCIETY FOR TESTING AND MATERIALS, CURRENT EDITION

DESIGN CRITERIA

WIND DESIGN: WIND LOAD IS BASED ON ASCE 7 CHAPTER 29 WITH THE FOLLOWING FACTORS

EXPOSURE CATEGORY = D — RISK CATEGORY = II
V_{3S} = 98MPH — WIND IMPORTANCE FACTOR, I_W = 1.0

DESIGN VESSEL IS 30' LONG WITH AVERAGE FREEBOARD OF 11'-6"
DESIGN VESSEL IS 60' LONG WITH AVERAGE FREEBOARD OF 14'

WAVE LOADS: P = 328 LBS

LIVE LOADS: LIVE LOAD = 40 PSF
SNOW LOAD = 25 PSF

SEISMIC LOADS: DOCK PILING R = 2.0
SEISMIC IMPORTANCE = 1.0
SD_1 = 0.595g

STRUCTURAL STEEL

1. ALL MISCELLANEOUS STEEL SHAPES AND PLATES, EXCEPT AS NOTED BELOW, SHALL CONFORM TO ASTM 36.
2. ALL WF SHAPES SHALL CONFORM TO ASTM A992, Fy = 50 KSI
3. ALL PILES SHALL CONFORM TO ASTM A252 GRADE 3, Fy = 45 KSI
4. ALL BOLTS SHALL BE ASTM A307, UNO.
5. ALL NUTS SHALL BE ASTM A563, UNO.
6. ALL WASHERS SHALL BE ASTM F436, UNO.
7. ALL THREADED RODS SHALL CONFORM TO ASTM F1554, GRADE 36.
8. ALL STEEL MEMBERS AND FASTENERS THAT ARE NOT EPOXY COATED SHALL BE HOT DIPPED GALVANIZED IN ACCORDANCE WITH ASTM A153 AS APPLICABLE.

WELDING

1. ALL WELDING SHALL BE PERFORMED BY WELDERS QUALIFIED FOR THE WELD AND POSITION SHOWN IN ACCORDANCE WITH AWS AND HAVING CURRENT CERTIFICATION FROM WABO.
2. ALL WELDS SHALL BE PERFORMED WITH PROCEDURES PREQUALIFIED OR QUALIFIED IN ACCORDANCE WITH AWS D1.1.
3. THE WELDS SHOWN ARE FOR THE FINAL CONNECTIONS, FIELD WELD SYMBOLS ARE SHOWN WHERE FIELD WELDS ARE REQUIRED BY THE STRUCTURAL DESIGN. THE CONTRACTOR IS RESPONSIBLE FOR DETERMINING IF A WELD SHOULD BE SHOP OR FIELD WELDED IN ORDER TO FACILITATE THE STRUCTURAL STEEL ERECTION.
4. WELDING ELECTRODES SHALL BE 70 KSI STRENGTH AND SHALL BE "LOW-HYDROGEN ELECTRODES."

WOOD

1. EACH PIECE OF LUMBER SHALL BEAR A STAMP INDICATING A GRADE MARK OF THE WEST COAST LUMBER INSPECTION BUREAU (WCLIB), WESTERN WOOD PRODUCTS ASSOCIATION (WWPA), OR OTHER AGENCY ACCREDITED BY THE AMERICAN STANDARD COMMITTEE (ALSC).
2. DIMENSION LUMBER SHALL BE P.T. DOUG-FIR NO 2 OR BETTER, UNLESS NOTED OTHERWISE.
3. STRUCTURAL GLUED LAMINATED TIMBER SHALL BE ALASKAN CEDAR AC.AC 20F-V12.
4. WOOD SHALL BE SEASONED DRY WITH A MAXIMUM MOISTURE CONTENT OF 19%.
5. PRESERVATIVE TREATED WOOD SHALL CONFORM TO THE AMERICAN WOOD PROTECTION ASSOCIATION (AWPA) UC4A. ALL WOOD SHALL BEAR A TREATMENT IDENTIFICATION MARK BY THE CERTIFYING AGENCY.
6. ALL BOLT HOLES IN WOOD MEMBERS SHALL BE A MINIMUM OF 1/32" TO MAXIMUM OF 1/16" LARGER THAN THE BOLT DIAMETER. PROVIDE PLATE WASHERS WHERE NUTS, BEAR ON WOOD. CUT WASHERS SHALL MEASURE 2 1/4"ø x 3/16" THICK.

GRATING

1. DECK GRATING SHALL BE SUNWALK 90 SERIES OR APPROVED EQUAL.

ABBREVIATIONS

@	AT
AWS	AMERICAN WELDING SOCIETY
CL	CENTER LINE
CLR	CLEAR
COL	COLUMN
CONT.	CONTINUOUS
DF	DOUG FIR
EA	EACH
EX OR (E)	EXISTING
GLB	GLULAM BEAM
LLH	LONG LEG HORIZONTAL
MIN	MINIMUM
MNFR	MANUFACTURER
OC	ON CENTER
OPP	OPPOSITE
PL	PLATE
PSI	POUNDS PER SQUARE INCH
PSF	POUNDS PER SQUARE FOOT
P.T.	PRESERVATIVE TREATED
SF	SQUARE FOOT
REF	REFERENCE
SIM	SIMILAR
SS	STAINLESS STEEL
t	THICK
TYP	TYPICAL
UNO	UNLESS NOTED OTHERWISE
VIF	VERIFY IN FIELD
WABO	WASHINGTON ASSOCIATION OF BUILDING OFFICIALS
WF	WIDE FLANGE
W/	WITH

BUILT BY SEABORN · ESTD 1947 ·

Seaborn Pile Driving
1080 W Ewing St
Seattle, WA 98119

Office: 206-236-1700 ext. 5
www.seabornpiledriving.com

Scope of Work: We propose to repair the existing dock, replace (1) existing boat lift, install (2) boat lifts, and repair the existing moorage cover.

County: King County
Location: Lake Washington

Applicant: Shihara Residence
7887 Overlake Dr
Medina, WA 98009

Created: 11/01/23

Last Updated: 12/27/2023 2:18 PM Leymar

Datum: CORPS OF ENGINEERS 1919
NE Quarter Of Section 36, Township 25, Range 04

Adjacent Owners:
BROTMAN SUSAN R
7917 OVERLAKE DR W 98039
BLUE WATER REALTY LLC
7777 OVERLAKE DR W 98039

SHEET 10.0

FRAMING PLAN

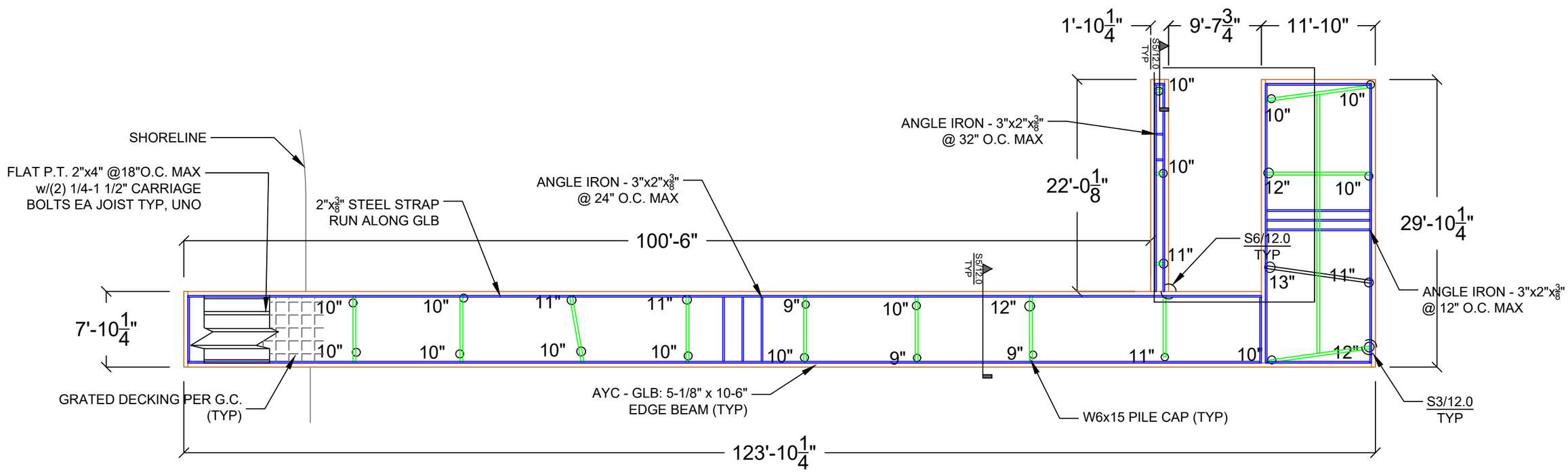

County: King County
Location: Lake Washington

Applicant: Shihara Residence
7887 Overlake Dr
Medina, WA 98009

Created: 11/01/23

Last Updated: 12/27/2023 2:18 PM Leymar

Datum: CORPS OF ENGINEERS 1919
NE Quarter Of Section 36, Township 25, Range 04

Adjacent Owners:
BROTMAN SUSAN R
7917 OVERLAKE DR W 98039
BLUE WATER REALTY LLC
7777 OVERLAKE DR W 98039

BUILT BY SEABORN · ESTD 1947 ·

Seaborn Pile Driving
1080 W Ewing St
Seattle, WA 98119

Office: 206-236-1700 ext. 5
www.seabornpiledriving.com

Scope of Work: We propose to repair the existing dock, replace (1) existing boat lift, install (2) boat lifts, and repair the existing moorage cover.

SHEET 11.0

DETAILS - TRACK

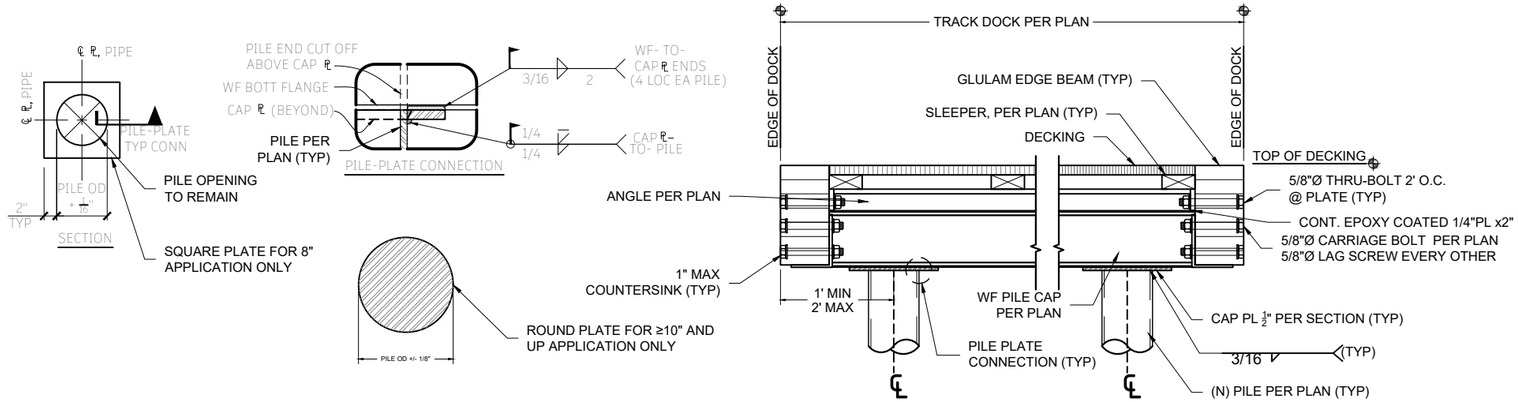

S1 DOCK SECTION w/PILES - TYP
SCALE: 1" - 1'

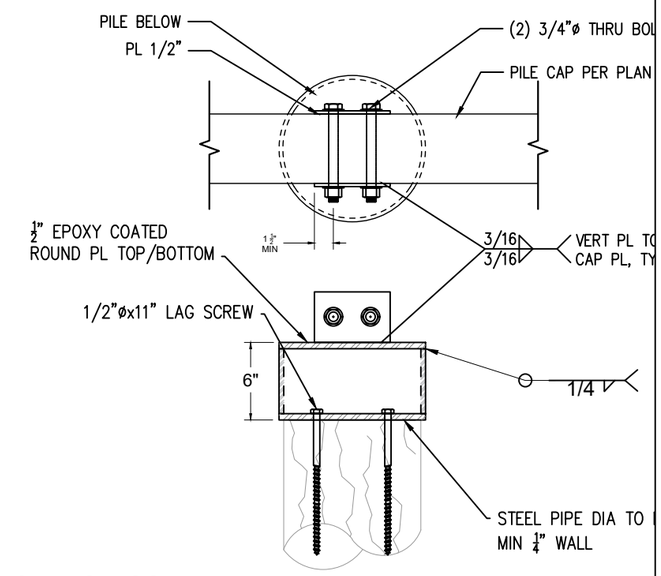

S3 I-BEAM CAP TO WOOD PILE - TYP
SCALE: 1" - 1'

S4 DETAIL NOT IN USE

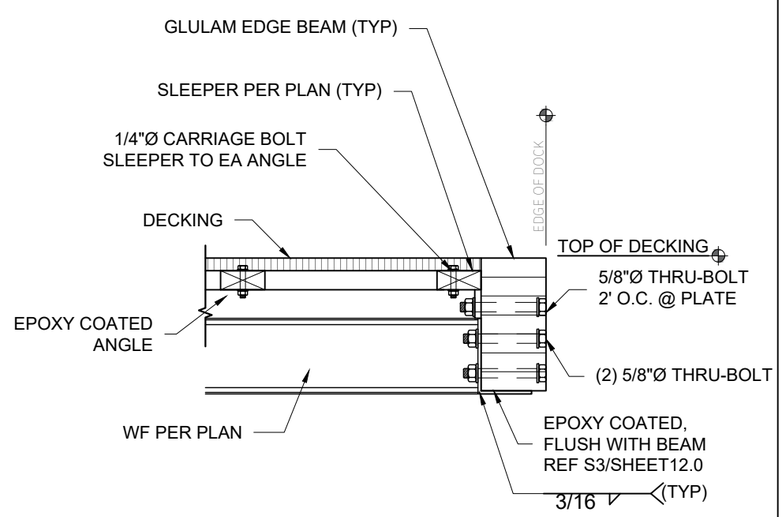

S5 EDGE SECTION (STEEL TRACK) - TYP
SCALE: 1" - 1'

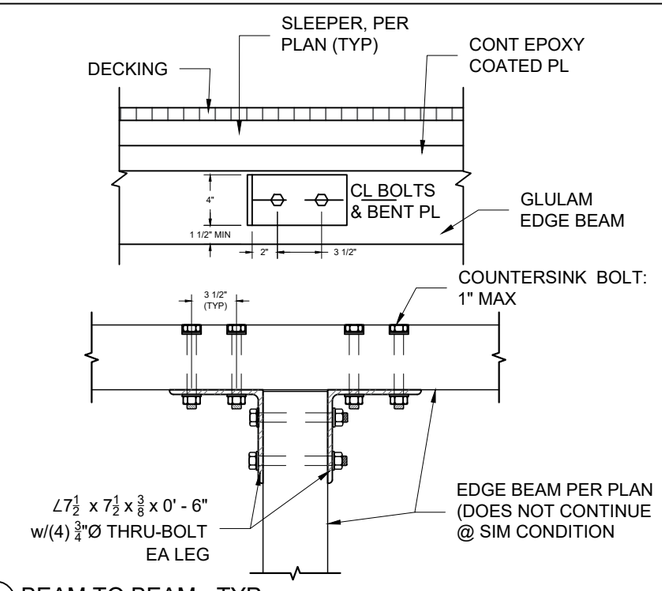

S6 BEAM TO BEAM - TYP
SCALE: 1" - 1'

County: King County
Location: Lake Washington

Applicant: Shihara Residence
7887 Overlake Dr
Medina, WA 98009

Created: 11/01/23
Last Updated: 12/27/2023 2:18 PM Leymar

Datum: CORPS OF ENGINEERS 1919
NE Quarter Of Section 36, Township 25, Range 04

Adjacent Owners:
BROTMAN SUSAN R
7917 OVERLAKE DR W 98039
BLUE WATER REALTY LLC
7777 OVERLAKE DR W 98039

BUILT BY SEABORN · ESTD 1947 ·

Seaborn Pile Driving
1080 W Ewing St
Seattle, WA 98119

Office: 206-236-1700 ext. 5
www.seabornpiledriving.com

Scope of Work: We propose to repair the existing dock, replace (1) existing boat lift, install (2) boat lifts, and repair the existing moorage cover.

SHEET 12.0

DETAILS - TRACK

S1 DETAIL NOT IN USE

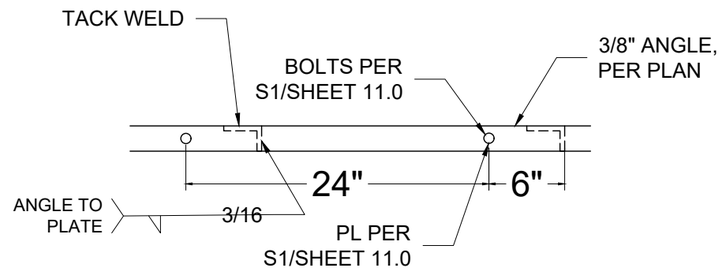

S2 ANGLE TO PLATE - TYP
SCALE: 1" - 1'

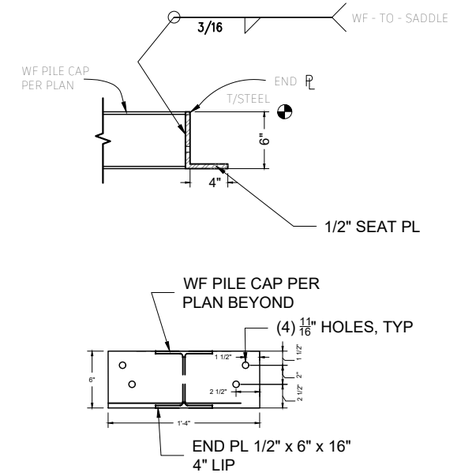

S3 BEAM SADDLE BRACKET
SCALE: 3/4" - 1'

S4 DETAIL NOT IN USE

S5 DETAIL NOT IN USE

S6 DETAIL NOT IN USE

BUILT BY SEABORN · ESTD 1947 ·

Seaborn Pile Driving
1080 W Ewing St
Seattle, WA 98119

Office: 206-236-1700 ext. 5
www.seabornpiledriving.com

Scope of Work: We propose to repair the existing dock, replace (1) existing boat lift, install (2) boat lifts, and repair the existing moorage cover.

County: King County
Location: Lake Washington

Applicant: Shihara Residence
7887 Overlake Dr
Medina, WA 98009

Created: 11/01/23

Last Updated: 12/27/2023 2:18 PM Leymar

Datum: CORPS OF ENGINEERS 1919
NE Quarter Of Section 36, Township 25, Range 04

Adjacent Owners:
BROTMAN SUSAN R
7917 OVERLAKE DR W 98039
BLUE WATER REALTY LLC
7777 OVERLAKE DR W 98039

SHEET
13.0

Appendix B:
Site Photographs

Photo 1 - Existing dock looking waterward.

Photo 2 - Existing dock looking landward.

Photo 3 - Existing shoreline looking east.

Photo 4 - Existing shoreline looking west.

Photo 5 - Existing conditions east of the project.

Photo 6 - Existing conditions west of the project.

Exhibit 5
P-24-024 & P-24-025
7887 Overlake Drive West

TECHNICAL MEMORANDUM

Prepared by: Farallon Consulting, L.L.C. dba Grette Associates
2709 Jahn Avenue NW, Suite H-5
Gig Harbor, WA 98335

August 25, 2025

Prepared for: City of Medina
Attention: Rebecca Bennett
PO Box 144 – 501 Evergreen Point Rd.
Medina, WA 98039

File No.: 3362-001-011

Re: P-24-024: Ecological No Net Loss Assessment Report – 7887 Overlake Drive West

The City of Medina (City) has contracted with Farallon Consulting, L.L.C. dba Grette Associates (Grette) to assist in the review of the Ecological No Net Loss Assessment Report (the "Report"; dated February 2024) prepared by Northwest Environmental Consulting, LLC.

The Report was prepared in support of the proposed project to replace an existing boat lift, dock decking, and canopy boat cover and install two additional boat lifts (Project). Project actions include removing and replacing decking on the existing residential dock with grated materials, replacing the existing boat lift, and replacing the existing boat cover with a translucent Crystallite moorage cover. Additionally, native shoreline plantings are proposed onsite for habitat benefit as mitigation to ensure no net loss. The proposed Project is located at 7887 Overlake Drive West (King County parcel 362504-9058) in Medina, Washington.

Grette's February 4, 2025 review determined that the Report provided an accurate and thorough description of the proposed work and included sufficient information to ensure compliance with the no net loss standard defined in Subtitle 16.6 (Shoreline Master Program [SMP]) of the current version of the Medina Municipal Code (MMC); however, one discrepancy regarding the constructed depth of the new nearshore boat lift was identified.

The Report stated that the new structures will be placed at a water depth between 8-10 feet, but the design sheets provided showed that the new nearshore boat lift will be placed at a water depth of approximately 4 feet 10 inches. Per MMC 16.65.080, the minimum water depth for boat lifts is 9 feet; however, the director may approve a deviation from this requirement under the condition that the structure maintains a water depth of at least 5 feet. Grette recommended addressing this issue prior to the City's acceptance of the Report.

Grette was provided revised Project materials on August 20, 2025 for review. These materials included a site plan and three water depth waiver request forms but did not include a revised Report. The location and depth of the nearshore boat lift in the site plan did not appear to change, however the water depth waiver forms state that the boat lifts will be placed in a minimum water depth of 5 feet. Based on sheet 6 of the site plan, the landward section of the boat lift is in between a depth of 4 feet 9 inches and 5 feet 6 inches. The current site plan does not specifically show

where a depth of 5 feet would be located; however, given the information provided in the water depth waivers, it appears that the boat lifts will be placed in at least 5 feet of water. Based on this information, the Project is compliant with the depth requirements in MMC 16.65.080.

Though a revised Report was not included in the materials provided on August 20, 2025, it appears that the Report's no net loss analysis did consider the details shown on the site plan that were attached to the Report. Grette believes that noted water depths between 8-10 feet in the Report are a typographical error. As such, Grette maintains our concurrence with the Report's conclusion that the Project will not result in a net loss of existing shoreline ecological functions.

In summary, based on the materials dated August 20, 2025, the Project will be constructed in a minimum water depth of 5 feet for compliance with MMC 16.65.080. Grette recommends the Project site plan be labeled to specify the minimum 5-foot depth for a clear depiction of the landward boat lift location, however this would only be an additional extra precaution to ensure City approval.

This review was conducted using the best available scientific information and methodologies and the best professional judgment of Grette staff biologists. Final acceptance and approval of the Report and the water depth waiver requests are at the discretion of City staff.

If you have any questions regarding this review, please contact me at (253) 573-9300, or by email at chadw@gretteassociates.com.

Sincerely,

Farallon Consulting, L.L.C. dba Grette Associates

Chad Wallin, PWS
Project Biologist

Madison Miele
Staff Biologist

Exhibit 6a
P-24-024 & P-24-025
7887 Overlake Drive West

CITY OF MEDINA

501 EVERGREEN POINT ROAD | PO BOX 144 | MEDINA WA 98039-0144
TELEPHONE 425-233-6400 | www.medina-wa.gov

October 14, 2024

Zion Napier
Seaborn Pile Driving
1080 W Ewing Pl #300
Seattle, WA 98119
(via zion@seabornpiledriving.com)

Re: **Determination of Complete Application – 7887 Overlake Dr W**
Non-Administrative Substantial Development Permit – File No: P-24-024

Dear Zion,

The City has reviewed the above-referenced Non-Administrative Substantial Development Permit Application for **7887 Overlake Dr W** and has determined it is complete pursuant to MMC 16.80.100. The City will issue a Notice of Application to notify parties of the application in accordance with MMC 16.80.110. The notice will be mailed and posted by the City within 14 days of the date of this letter pursuant to MMC 16.80.140.

Please be aware that this determination does not preclude the City from requesting additional information. If you have questions, please do not hesitate to contact me directly at tcarter@ldccorp.com or 425.949.0152.

Sincerely,

Thomas Carter
City of Medina
Planning Consultant

CC: Jonathan Kesler, AICP
Rebecca Bennett

Exhibit 6b
P-24-024 & P-24-025
7887 Overlake Drive West

CITY OF MEDINA

NOTICE OF APPLICATION

Proposal: To repair the existing dock, replace (1) existing boat lift, install (2) boat lifts, and repair the existing moorage cover.

File No. P-24-024, Non-administrative Substantial Development Permit
P-24-025 SEPA Threshold

Applicant: Zion Napier (Agent)

Site Address: 7887 Overlake Dr W, Medina, WA 98039

Other Required Permits: Building Permit

Application Received: May 6, 2024
Determination of Completeness: October 14, 2024
Notice of Application: October 24, 2024

PUBLIC COMMENTS: Pursuant to MMC 16.80.110(B)(7), this application has a public comment period. Please submit public comments no less than 14 days, November 7, 2024, and no more than 30 days, November 23, 2024, from the date of issuance of the Notice of Application.

STATE ENVIRONMENTAL POLICY ACT: The proposal is not exempt from environmental (SEPA) review pursuant to WAC 197-11-800 due to the replacement of the boat lift AND expansion of the deck

DETERMINATION OF CONSISTENCY: Pursuant to RCW 36.70B.040, a preliminary determination has found the proposal consistent with the provisions of the Medina Municipal Code.

APPEAL RIGHTS: Any person can comment on the application, receive notice of and participate in any hearings, and request a copy of the decision once made. For P-24-025, pursuant to MMC 16.80.220(A), the decision may be appealed to the hearing examiner withing 14 days of a notice of decision. For P-24-024, pursuant to MMC 16.80.220(B), the decision may be appealed to King County superior court by filing a land use petition within 21 days pursuant to Chapter 36.70C RCW.

QUESTIONS: The complete application may be viewed either at City Hall, located at 501 Evergreen Point Road, Medina WA, 98039, or electronically by emailing the staff contact below.

STAFF CONTACT: Jonathan Kesler, AICP, City of Medina Planning Manager, at (425) 233-6416 or jkesler@medina-wa.gov.

SITE PLAN:

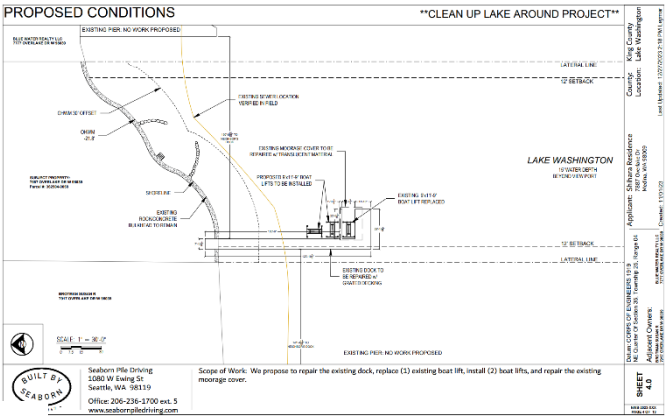

Jonathan Kesler, AICP, Planning Manager

10/24/2024
Notice Issued

WARNING!
Posted notice is not to be removed, mutilated or concealed in any way.

CITY OF MEDINA
NOTICE OF APPLICATION

Proposal: To repair the existing dock, replace (1) existing boat lift, install (2) boat lifts, and repair the existing moorage cover.

File No. P-24-024, Non-administrative Substantial Development Permit
P-24-025 SEPA Threshold

Applicant: Zion Napier (Agent)

Site Address: 7887 Overlake Dr W, Medina, WA 98039

Other Required Permits: Building Permit

Application Received: May 6, 2024
Determination of Completeness: October 14, 2024
Notice of Application: October 24, 2024

PUBLIC COMMENTS: Pursuant to MMC 16.80.110(B)(7), this application has a public comment period. Please submit public comments no less than 14 days, November 7, 2024, and no more than 30 days, November 23, 2024, from the date of issuance of the Notice of Application.

STATE ENVIRONMENTAL POLICY ACT: The proposal is not exempt from environmental (SEPA) review pursuant to WAC 197-11-800 due to the replacement of the boat lift AND expansion of the deck

DETERMINATION OF CONSISTENCY: Pursuant to RCW 36.70B.040, a preliminary determination has found the proposal consistent with the provisions of the Medina Municipal Code.

APPEAL RIGHTS: Any person can comment on the application, receive notice of and participate in any hearings, and request a copy of the decision once made. For P-24-025, pursuant to MMC 16.80.220(A), the decision may be appealed to the hearing examiner withing 14 days of a notice of decision. For P-24-024, pursuant to MMC 16.80.220(B), the decision may be appealed to King County superior court by filing a land use petition within 21 days pursuant to Chapter 36.70C RCW.

QUESTIONS: The complete application may be viewed either at City Hall, located at 501 Evergreen Point Road, Medina WA, 98039, or electronically by emailing the staff contact below.

STAFF CONTACT: Jonathan Kesler, AICP, City of Medina Planning Manager, at (425) 233-6416 or jkesler@medina-wa.gov.

SITE PLAN:

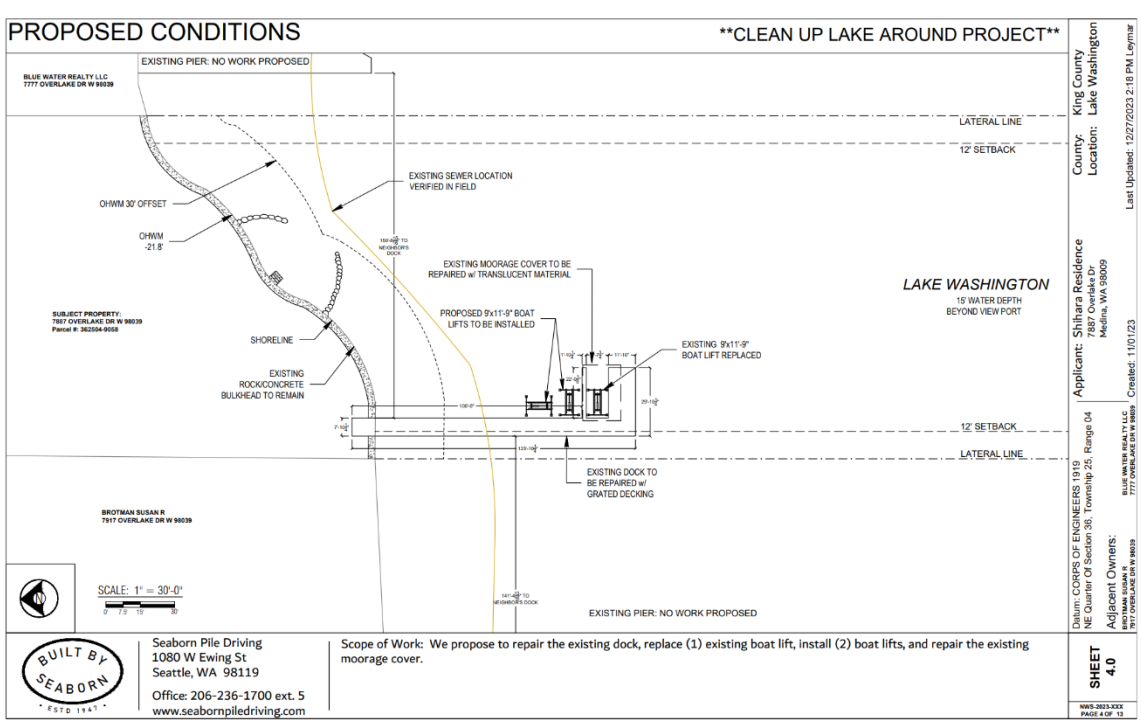

Jonathan Kesler, AICP, Planning Manager

10/24/24
Notice Issued

WARNING!
Posted notice is not to be removed, mutilated or concealed in any way.

CITY OF MEDINA

501 EVERGREEN POINT ROAD | PO BOX 144 | MEDINA WA 98039-0144
TELEPHONE 425-233-6400 | www.medina-wa.gov

NOTICE OF APPLICATION

Proposal: To repair the existing dock, replace (1) existing boat lift, install (2) boat lifts, and repair the existing moorage cover.

File No. P-24-024, Non-administrative Substantial Development Permit
P-24-025 SEPA Threshold

Applicant: Zion Napier (Agent)

Site Address: 7887 Overlake Dr W, Medina, WA 98039

Other Required Permits: Building Permit

Application Received: May 6, 2024
Determination of Completeness: October 14, 2024
Notice of Application: October 24, 2024

PUBLIC COMMENTS: Pursuant to MMC 16.80.110(B)(7), this application has a public comment period. Please submit public comments no less than 14 days, November 7, 2024, and no more than 30 days, November 23, 2024, from the date of issuance of the Notice of Application.

STATE ENVIRONMENTAL POLICY ACT: The proposal is not exempt from environmental (SEPA) review pursuant to WAC 197-11-800 due to the replacement of the boat lift AND expansion of the deck.

DETERMINATION OF CONSISTENCY: Pursuant to RCW 36.70B.040, a preliminary determination has found the proposal consistent with the provisions of the Medina Municipal Code.

APPEAL RIGHTS: Any person can comment on the application, receive notice of and participate in any hearings, and request a copy of the decision once made. For P-24-025, pursuant to MMC 16.80.220(A), the decision may be appealed to the hearing examiner withing 14 days of a notice of decision. For P-24-024, pursuant to MMC 16.80.220(B), the decision may be appealed to King County superior court by filing a land use petition within 21 days pursuant to Chapter 36.70C RCW.

QUESTIONS: The complete application may be viewed either at City Hall, 501 Evergreen Point Rd, Medina WA, 98039, or electronically by emailing the staff contact below.

STAFF CONTACT: Jonathan Kesler, AICP, City of Medina Planning Manager, at (425) 233-6416 or jkesler@medina-wa.gov.

Jonathan Kesler

Jonathan Kesler, AICP, Planning Manager

10/24/2024
Notice Issued

Site Plan

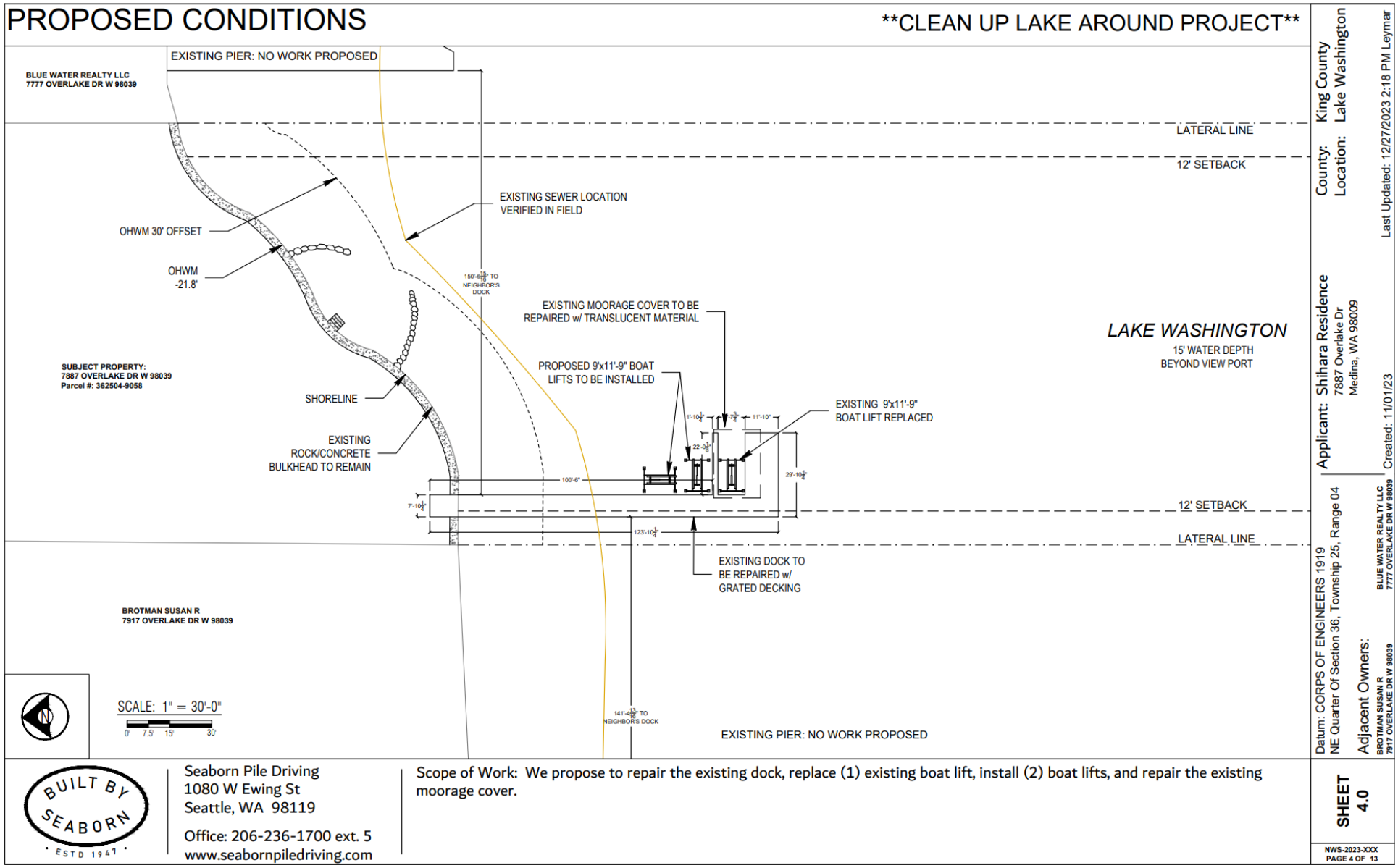
PROPOSED CONDITIONS
CLEAN UP LAKE AROUND PROJECT
EXISTING PIER: NO WORK PROPOSED
BLUE WATER REALTY LLC
7777 OVERLAKE DR W 98039
LATERAL LINE
12' SETBACK
EXISTING SEWER LOCATION
VERIFIED IN FIELD
OHWM 30' OFFSET
OHWM
-21.8'
150'-6 1/8" TO
NEIGHBOR'S
DOCK
EXISTING MOORAGE COVER TO BE
REPAIRED w/ TRANSLUCENT MATERIAL
LAKE WASHINGTON
15' WATER DEPTH
BEYOND VIEW PORT
SUBJECT PROPERTY:
7887 OVERLAKE DR W 98039
Parcel #: 362504-9058
PROPOSED 9'x11'-9" BOAT
LIFTS TO BE INSTALLED
SHORELINE
EXISTING 9'x11'-9"
BOAT LIFT REPLACED
EXISTING
ROCK/CONCRETE
BULKHEAD TO REMAIN
1'-10 1/4"
7 3/4"
11'-10"
22'-0 1/4"
100'-6"
29'-10 1/4"
7'-10 1/4"
12' SETBACK
123'-10 1/4"
LATERAL LINE
EXISTING DOCK TO
BE REPAIRED w/
GRATED DECKING
BROTMAN SUSAN R
7917 OVERLAKE DR W 98039
SCALE: 1" = 30'-0"
0' 7.5' 15' 30'
141'-4 1/2" TO
NEIGHBOR'S DOCK
EXISTING PIER: NO WORK PROPOSED
County: King County
Location: Lake Washington
Last Updated: 12/27/2023 2:18 PM Leymar
Applicant: Shihara Residence
7887 Overlake Dr
Medina, WA 98009
Created: 11/01/23
Datum: CORPS OF ENGINEERS 1919
NE Quarter Of Section 36, Township 25, Range 04
Adjacent Owners:
BROTMAN SUSAN R
7917 OVERLAKE DR W 98039
BLUE WATER REALTY LLC
7777 OVERLAKE DR W 98039
BUILT BY SEABORN
ESTD 1947
Seaborn Pile Driving
1080 W Ewing St
Seattle, WA 98119
Office: 206-236-1700 ext. 5
www.seabornpiledriving.com
Scope of Work: We propose to repair the existing dock, replace (1) existing boat lift, install (2) boat lifts, and repair the existing moorage cover.
SHEET
4.0
NWS-2023-XXX
PAGE 4 OF 13

Exhibit 6c
P-24-024 & P-24-025
7887 Overlake Drive West

CITY OF MEDINA
NOTICE OF VIRTUAL HEARING

NOTICE IS HEREBY GIVEN that the Medina Hearing Examiner will conduct a virtual public continued hearing on **Wednesday, February 18, 2026, at 12:00 PM** or as called as soon thereafter via Zoom. The purpose of this continued hearing is to consider testimony for and against the following:

Proposal: To repair the existing dock, replace (1) existing boat lift, install (2) boat lifts, and repair the existing moorage cover.

File No. P-24-024 & P-24-025, Non-administrative Substantial Development Permit & SEPA

Applicant: Ted Burns (Agent)

Site Address: 7887 Overlake Dr W, Medina, WA 98039

YOU ARE INVITED to attend the remote hearing and make oral and written comments. The Hearing Examiner has the discretion to limit testimony to relevant, non-repetitive comments and to set time limits. If you are unable to attend, written comments, photographs, or other exhibits on the application may be submitted to the staff contact or address below before the hearing date. The Hearing Examiner gives equal weight to testimony submitted in person at a hearing and written comments that are submitted. You are eligible to request a copy of the decision post hearing.

For information on how to participate in the remote hearing, please see the City's website for the hearing agenda which will be posted by Tuesday, February 10, 2026, at 4:00 PM. Please either log in or phone in at the beginning of the hearing to participate. If you need special accommodations, please contact the staff below.

APPEAL RIGHTS: Any person can comment on the application, receive notice of and participate in any hearings, and request a copy of the decision once made. Pursuant to MMC 16.80.220(B), a Type 3 Non-Administrative Substantial Development Permit decision may be appealed to the King County Superior Court.

QUESTIONS: Requests for information and/or written comments may be directed to the staff contact below, or to Medina City Hall, Attn: Development Services, 501 Evergreen Point Rd, Medina, WA 98039.

STAFF CONTACT: Kim Gunderson, City of Medina Planning Consultant, at (253) 389-1864 or kmahoney.planning@gmail.com.

Kim Gunderson, Planning Consultant

01/29/2026
Notice Issued

BLUE WATER REALTY LLC
7777 OVERLAKE DR W
MEDINA WA 98039

SWANSON KRIS
KEVIN+ELIZABET
7759 OVERLAKE DR W
MEDINA WA 98039

SURESH RAMAMURTHY+MEERA
7757 OVERLAKE DR W
MEDINA WA 98039

SURESH RAMAMURTHY+MEERA
7755 OVERLAKE DR W
MEDINA WA 98039

SHUM HEUNG Y & CHAN KA Y
7751 OVERLAKE DR W
MEDINA WA 98039

DECEMBER 30 LLC
7745 OVERLAKE DR W
MEDINA WA 98039

JONSSON LARS H+LAURIE M
7737 OVERLAKE DR W
MEDINA WA 98039

GORES THOMAS
7747 OVERLAKE DR W
MEDINA WA 98039

SVENSON SCOTT T+ALLYSON D
7735 OVERLAKE DR W
MEDINA WA 98039

SOLID E KENNETH+B KAYE
7743 OVERLAKE DR W
MEDINA WA 98039

BROTMAN SUSAN R
7919 OVERLAKE DR W
MEDINA WA 98039

BROTMAN SUSAN R
7917 OVERLAKE DR W
MEDINA WA 98039

7935 OVERLAKE REVOCABLE TRU
7935 OVERLAKE DR W
MEDINA WA 98039

SHERRIE & MICHAEL KIM
8105 OVERLAKE DR W
MEDINA WA 98039

WANG-CHEN LIVING TRUST
8102 NE 5th ST
MEDINA WA 98039

MEDINA ELEMENTARY SCHOOL
8001 NE 8th ST
MEDINA, WA, 98039

Exhibit 7
P-24-024 & P-24-025
7887 Overlake Drive West

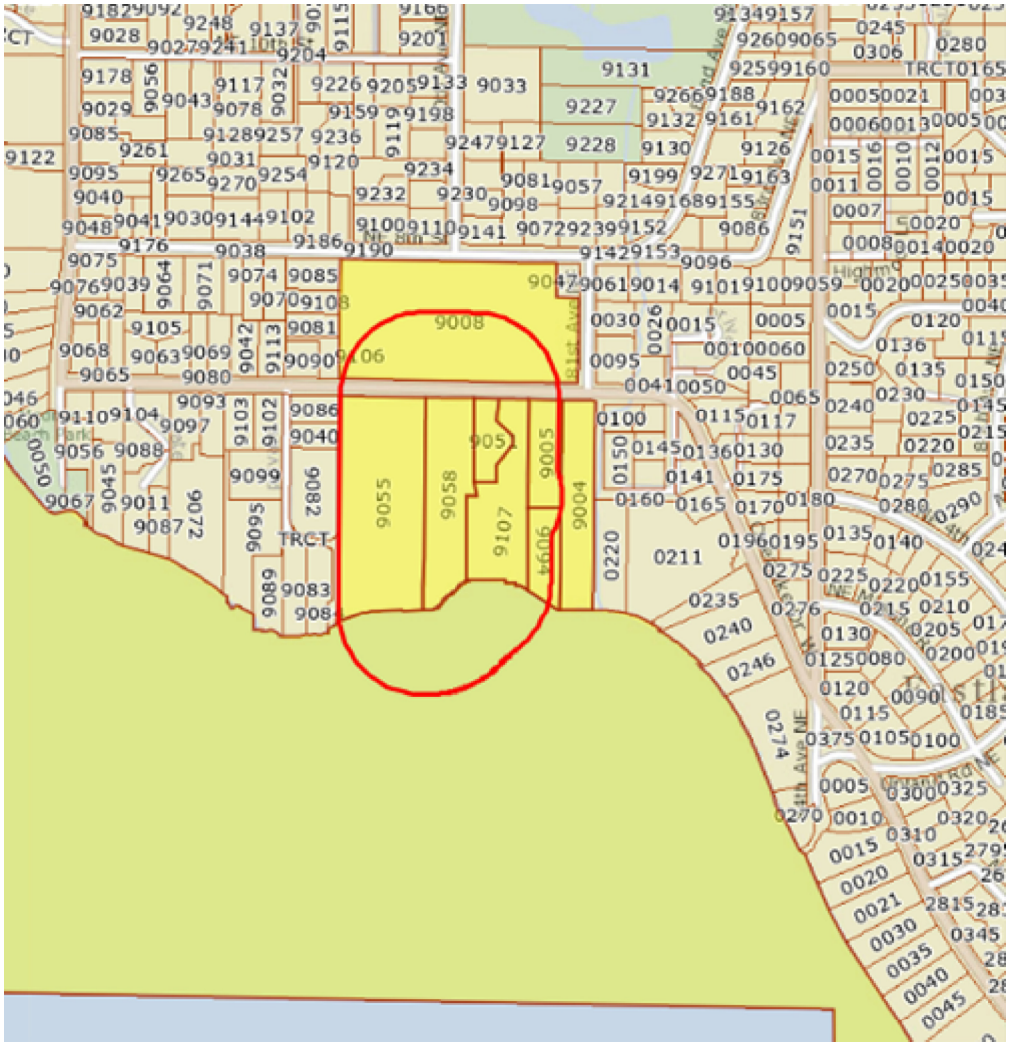
9008
9055
9058
9107
9051
9005
9004
9006
9094
0220
0211
0274
TRCT
Mt Olympus St
Highway
Lincoln Ave
Bryant Rd NE
Mt Olympus Ave NE

DEVELOPMENT SERVICES
501 EVERGREEN POINT ROAD MEDINA, WA 98039
PHONE: 425-233-6414/6400

INSTRUCTIONS FOR A NON-ADMINISTRATIVE SUBSTANTIAL DEVELOPMENT PERMIT

Exhibit 8
P-24-024 & P-24-025
7887 Overlake Drive West

This packet may be submitted for the following:

- All development activity inside the shoreline jurisdiction not exempt from a substar
(see WAC 173-27-040)

General Information

A. A complete application is required at the time of submittal. Please answer all questions on the application clearly and completely.

B. The City's application form must be used, however, the project narrative and answers to the criteria questions may be submitted on a separate sheet of paper.

C. A Notice of Complete Application or Notice of Incomplete Application will be issued within twenty-eight (28) days of submittal.

D. A Non-Administrative Substantial Development Permit requires a hearing in front of the Medina Hearing Examiner.

Requirements

I. APPLICATION

A. The following documents are required at the time of submittal, unless otherwise indicated. The information is required prior to processing of the application unless otherwise indicated. An incomplete application will not be processed. A complete application will include:

1. Completed Substantial Development Permit Checklist, Substantial Development Permit Application and Declaration of Agency form

2. Proof of ownership (copy of deed)

3. Site Plan with the following:
   a. A general description of the proposed project that includes the proposed use or uses and the activities necessary to accomplish the project;
   b. Identification of the shoreline water body;
   c. A general description of the property as it now exists, including physical characteristics and improvements and structures;
   d. A general description of the vicinity of the proposed project, including identification of the adjacent uses, structures and improvements, intensity of development and physical characteristics;
   e. Identification of the ordinary highwater mark:
      i. This may be an approximate location; provided, that for any development where a determination of consistency with the applicable regulations requires a precise location of the ordinary high water mark, the mark shall be located precisely and the biological and hydrological basis for the mark's location as indicated on the plans shall be included in the development plan;

ii. Where the ordinary high water mark is neither adjacent to or within the boundary of the project, the plan shall indicate the distance and direction to the nearest ordinary high water mark of a shoreline;

f. Existing and proposed land contours with minimum two-foot elevation intervals;
g. A general description of the character of vegetation found on the site;
h. The dimensions and locations of all existing and proposed structures and improvements;

4. A landscaping and/or restoration plan as applicable;

5. Mitigation measures, as applicable;

6. Quantity, source and composition of all fill material that is placed on the site, whether temporary or permanent;

7. Quantity, composition and destination of all excavation and/or dredged material; and

8. Additional submittal information set forth in the Medina shoreline master program for the use.

B. State Environmental Policy Act (SEPA) checklist (if applicable)

C. A word document formatted to Avery address labels containing the names of property owners and their mailing addresses for all properties within 300 feet ***or*** three (3) parcels depth, whichever distance is greater but not to exceed 1,000 feet. See mailing labels information bulletin for further information.

1. Vicinity map showing the site with the 300' or three (3) parcels depth minimum buffer of property owners who will be notified of the application.

D. Any other perspective drawings, renderings, studies, or information the applicant feels is relevant to support the substantial development permit request.

Procedure

II. NON-ADMINISTRATIVE SUBSTANTIAL DEVELOPMENT PERMIT PROCESS

A. Please submit the items listed above and any other information which may be required by the City at the time the application is filed.

B. **MODIFICATIONS: Changes to an application that has already been submitted and noticed to surrounding property owners may trigger the application to be re-noticed.**

C. Following receipt of the substantial development permit application, the City will review the application for completeness and either issue a Notice of Application which includes a public commenting period outlined in MMC 16.80.110(B)(7) or a Notice of Incomplete Application, listing the additional required documentation. Any comments that are received by the public will be forwarded to the applicant for response. A hearing will be schedule with the Medina Hearing Examiner and a Notice of Hearing will be posted, mailed, and published according to the general notice requirements in MMC 16.80.140 at least fifteen (15) days before the hearing date.

D. STAFF REPORT AND MEETING AGENDA: A staff report and meeting agenda will be emailed to the applicant for review a week before the scheduled hearing.

III. PUBLIC HEARING

A. The Hearing Examiner bases his/her decision on the information provided in the application and testimony given at the public hearing. Information provided to the applicant by City staff or consultants regarding previous actions shall in no way be construed to indicate what the Hearing Examiner's decision will be on a given application.

B. At the public hearing all evidence for or against the application will be heard in the following order:

1. The Hearing Examiner will introduce the requested application.

2. Testimony will be heard as follows:
   a. Staff
   b. Applicant and/or their representatives.
   c. Audience in attendance.

3. Correspondence applicable to the case will be provided to the Hearing Examiner.

C. Testimony must be related to the case being considered.

IV. DISPOSITION OF CASES

A. The Hearing Examiner may be prepared to make a final determination on the case following the conclusion of the hearing or may continue the matter if sufficient reason for such action is found.

B. Before any substantial development permit may be granted, the Hearing Examiner shall find that all of the following conditions exist in each case of an application for a substantial development permit:

1. The proposed development is consistent with the policies and provisions of the State Shoreline Management Act of 1971, set forth in RCW 90.58; and

2. The proposed development is consistent with the State Shoreline Management Permit and Enforcement Procedures, set forth in WAC 173-27; and

3. The proposed development is consistent with the provisions of the Medina shoreline master program.

C. The decision authority may attach such conditions as to prevent undesirable effects of the proposed development and to assure consistency of the development with the Shoreline Management Act and the Medina shoreline master program.

D. The decision of the Hearing Examiner will be issued to City staff ten (10) working days from the public hearing. The decision is effective upon the date of decision. Notices of Decision will be mailed to applicants and other interested parties as soon as possible.

V. EXPIRATION

A. An approved substantial development permit shall expire as set forth in WAC 173-27-090.

DEVELOPMENT SERVICES
501 EVERGREEN POINT ROAD MEDINA, WA 98039
PHONE: 425-233-6414/6400

NON-ADMINISTRATIVE SUBSTANTIAL DEVELOPMENT PERMIT CHECKLIST

This checklist contains the minimum submission requirements for a non-administrative substantial development permit that are due at the time of submittal. Please note that not all items listed may apply to your submittal.

COMPLETE APPLICATION

☑	Non-Administrative Substantial Development Permit Checklist
	Complete Substantial Development Permit Application: ☑ Application form ☑ Signature of applicant/agent ☑ All questions answered in full
☑	Declaration of Agency form
☑	Proof of Ownership (copy of deed)
☑	Site Plan with required information
☑	Landscaping and/or restoration plan (if applicable)
☑	Mitigation Measures (if applicable)
☑	Quantity, source and composition of all fill material that is placed on the site, whether temporary or permanent (if applicable)
☑	Quantity, composition and destination of all excavation and/or dredged material (if applicable)
☑	Additional submittal information set forth in the Medina shoreline master program for the use
☑	State Environmental Policy Act (SEPA) Checklist (if applicable)
	Mailing labels – Word doc formatted to Avery address labels ☑ Mailing labels containing the names of property owners and their mailing addresses for all properties within 300 feet **or** three (3) parcels depth, whichever distance is greater but not to exceed 1,000 feet. ☑ Vicinity map showing the site with the 300' or three (3) parcels depth minimum buffer of property owners who will be notified of the application.

DEVELOPMENT SERVICES

501 EVERGREEN POINT ROAD MEDINA, WA 98039
PHONE: 425-233-6414/6400

SUBSTANTIAL DEVELOPMENT PERMIT APPLICATION

Complete this form for the following:

- All development activity inside the shoreline jurisdiction not exempt from a substantial development permit (see WAC 173-27-040)
- All non-exempt development having a fair market value of $50,000 or less, involving no dredging, and having grading of 500 cubic yards or less (excluding fill used for habitat) are eligible for an administrative approval process

General Information

Owner Name:
7887 OVERLAKE DR W LLC

Property Address:
7887 OVERLAKE DR W, Medina, WA, 98039

Legal Description: POR OF GL'S 1 & 2 OF SD SEC DAF - BEG AT NXN OF SLY LN NE 6 TH ST & W LN OF ELY 65.61 FT OF SD GL 2 TH SLY PLW ELY LN OF SD GL 2 TO MEANDER LN OF ELY SH OF LK WA TH NELY ALG SD MEANDER LN TO ELY LN OF SD GL 2 TH CONT NELY ALG SD MEANDER LN 115.50 FT TH NLY ALG A LN WCH NXN AAP 30 FT S & 1236.38 FT W PLW SEC LN OF NE COR OF SD GL 1 TO SLY LN OF SD NE 6 TH ST TH WLY ALG SD SLY LN TO TPOB TGW POR BAAP 1236.38 FT W & 510 FT S OF NE COR OF GL 1 SD PT BEING ON S MGN OF NE 6TH ST TH S 89-02-59 E ALG SD S MGN 22 FT TH S 00-21-59 W PLW E LN OF GL 1 286.50 FT TH S 12-52-00 E 61.26 FT TH N 89-38-01 W 36.02 FT TH N 00-21-59 E PLW E LN OF SD GL 1 346.36 FT TO POB TGW 2ND CLASS SHORE LANDS ADJ AKA PAR A OF MEDING LLA #91-5 PER REC #911106-0341

Tax Parcel Number: 362504-9058

Please check one:

☑ **Non-administrative** ☐ **Administrative**

☐ Check this box if this is a revision to an approved substantial development permit

Agent / Primary Contact

Name: Zion Napier	**Email:** permits@seabornpiledriving.com
Contact Phone: 206-236-1700	**Alternative Phone:**
Mailing Address: 1080 W Ewing Pl #300	**City:** Seattle **State:** WA **Zip:** 98119

Property Information

Project Fair Market Value (include all phases for the next five years):
$226,405.00

Other than Lake Washington, are there any critical area(s) located on the property (Ch. 16.67 MMC)?
☐ **YES** ☑ **NO**

Will work occur in Lake Washington?
☑ **YES** ☐ **NO**

Shoreline Environment Designation(s) [Check all that apply]:
☑ Residential
☐ Urban Conservancy
☐ Transportation
☐ Aquatic

See MMC 16.61.020

If work will occur in Lake Washington, what is the type of development (Check all that apply):
☑ Pier/ dock
☑ Moorage cover
☐ Boatlift
☐ Other Overwater Structure
☐ Hard shoreline stabilization structure
☐ Soft shoreline stabilization measures
☐ Dredging/ Fill
☑ Other Boat lifts

Does the project include a shoreline variance or shoreline conditional use permit?
☑ No
☐ Shoreline Variance
☐ Shoreline Conditional Use Permit

Please provide a complete description of the proposed project (attach additional pages if necessary):

We propose to repair the existing dock, replace (1) existing boat lift, install (2) boat lifts, and repair the existing moorage cover.

Approval Criteria

The following is the approval criteria for a substantial development permit application. Please respond to each item by providing as much detailed information as possible to support your request. Attach additional pages if necessary.

1. **The proposed development is consistent with the policy and provisions of the State Shoreline Management Act of 1971 (Chapter 90.58 RCW)**

   See NNL report.

RCW 90.58.020:

- *Foster all reasonable and appropriate uses*
- *Protect against adverse effects to the public health, the land and its vegetation and wildlife*
- *Priority to single-family residences and appurtenant structures*
- *Minimize insofar as practical, any resultant damage to the ecology and environment and interference to the public's use of the water*

2. **The proposed development is consistent with the State Shoreline Management Permit and Enforcement Procedures**

   See NNL report.

- *Washington Administrative Code 173-27*
- *Chapters 16.80, and Chapter 16.71 or 16.72 MMC*

3. **The proposed development is consistent with the provisions of the Medina shoreline master program:**

   a. ***Comprehensive Plan Goals & Policies (Element 2.1 – Shoreline Management Sub-element)***

   See NNL report.

   b. ***Shoreline Master Program Chapters 16.60 through 16.67 MMC***

   See NNL report.

I certify under the penalty of perjury that I am the owner of the above property or the duly authorized agent of the owner(s) acting on behalf of the owner(s) and that all information furnished in support of this application is true and correct.

DocuSigned by:

Signature Kathy Young 313556336DAC4D8... Owner ☑ Agent ☐ Date 1/18/2024

Signature Zion Napier Owner ☐ Agent ☑ Date 05/06/2024

DEVELOPMENT SERVICES
501 EVERGREEN POINT ROAD MEDINA, WA 98039
PHONE: 425-233-6414/6400

STATE ENVIRONMENTAL POLICY ACT

Exhibit 9
P-24-024 & P-24-025
7887 Overlake Drive West

ENVIRONMENTAL CHECKLIST
WAC 197-11-960

Purpose of checklist:

The State Environmental Policy Act (SEPA), chapter 43.21C RCW, requires all government agencies to identify and consider the environmental impacts that may result from governmental decisions. These decisions may be related to issuing permits for private projects, constructing public facilities, or adopting regulations, policies or plans. The purpose of this checklist is to provide information to help you and the agency identify impacts from your proposal (and to reduce or avoid impacts from the proposal, if it can be done) and to help the agency decide whether an Environmental Impact Statement (EIS) is required.

When does a project require a SEPA Checklist?

Any project not exempt under WAC 197-11-800 requires a SEPA checklist to be completed. If there is a question about whether a project is exempt, complete the checklist and a determination will be made by the Responsible Official.

Review Fee: See fee schedule.

Instructions for applicants:

This environmental checklist asks you to describe some basic information about your proposal. Answer the questions briefly, with the most precise information known, or give the best description you can.

You must answer each question accurately and carefully, to the best of your knowledge. In most cases, you should be able to answer the questions from your own observations or project plans without the need to hire experts. If you really do not know the answer, or if a question does not apply to your proposal, write "do not know" or "does not apply." Complete answers to the questions now may avoid unnecessary delays later.

Some questions ask about governmental regulations, such as zoning, shoreline, and landmark designations. Answer these questions if you can. If you are not sure, city staff can assist you.

The checklist questions apply to all parts of your proposal, *even if you plan to do them over a period of time or on different parcels of land*. Attach any additional information that will help describe your proposal or its environmental effects. You may be asked to explain your answers or provide additional information reasonably related to determining if there may be significant adverse impact.

DEVELOPMENT SERVICES
501 EVERGREEN POINT ROAD MEDINA, WA 98039
PHONE: 425-233-6414/6400

STATE ENVIRONMENTAL POLICY ACT

General Information

Name of proposed project: 7887 OVERLAKE DR W LLC Pier

Applicant Name: Zion Napier

Address of applicant and contact person: 1080 W Ewing Pl #300		**Phone:** 206.236.1700
City, State: Seattle WA	**Zip:** 98119	**Email:** permits@seabornpiledriving.com

Background

Proposed timing or schedule (including phasing, if applicable):

Upon receipt of all applicable permits and open work window.

Do you have any plans for future additions, expansion, or further activity related to or connected with this proposal? If yes, explain.

No

List any environmental information you know about that has been prepared, or will be prepared, directly related to this proposal.

No Net Loss Report Included

Do you know whether applications are pending for governmental approvals of other proposals directly affecting the property covered by your proposal? If yes, explain.

Unknown

List any government approvals or permits that will be needed for your proposal, if known.

City of Medina SSDP with SEPA, City of Medina Building permit, US Army CORPS of Engineers Section 10 federal permit, and HPA permit from WDFW.

Give brief, complete description of your proposal, including the proposed uses and the size of the project and site. There are several questions later in this checklist that ask you to describe certain aspects of your proposal. You do not need to repeat those answers on this page.

We propose to repair the existing dock, replace (1) existing boat lift, install (2) boat lifts, and repair the existing moorage cover.

Location of the proposal. Give sufficient information for a person to understand the precise location of your proposed project, including a street address, if any, and section, township, and range, if known. If a proposal would occur over a range of area, provide the range or boundaries of the site(s). Provide a legal description, site plan, vicinity map, and topographic map, if reasonably available. While you should submit any plans required by the agency, you are not required to duplicate maps or detailed plans submitted with any permit applications related to this checklist.

Pin: 362504-9058
Plat Block:
Plat Lot:
LAT: 47.61085 LONG:--122.22292

LEGAL DESCRIPTION: POR OF GL'S 1 & 2 OF SD SEC DAF - BEG AT NXN OF SLY LN NE 6 TH ST & W LN OF ELY 65.61 FT OF SD GL 2 TH SLY PLW ELY LN OF SD GL 2 TO MEANDER LN OF ELY SH OF LK WA TH NELY ALG SD MEANDER LN TO ELY LN OF SD GL 2 TH CONT NELY ALG SD MEANDER LN 115.50 FT TH NLY ALG A LN WCH NXN AAP 30 FT S & 1236.38 FT W PLW SEC LN OF NE COR OF SD GL 1 TO SLY LN OF SD NE 6 TH ST TH WLY ALG SD SLY LN TO TPOB TGW POR BAAP 1236.38 FT W & 510 FT S OF NE COR OF GL 1 SD PT BEING ON S MGN OF NE 6TH ST TH S 89-02-59 E ALG SD S MGN 22 FT TH S 00-21-59 W PLW E LN OF GL 1 286.50 FT TH S 12-52-00 E 61.26 FT TH N 89-38-01 W 36.02 FT TH N 00-21-59 E PLW E LN OF SD GL 1 346.36 FT TO POB TGW 2ND CLASS SHORE LANDS ADJ AKA PAR A OF MEDING LLA #91-5 PER REC #911106-0341

Environmental Elements

1. Earth

a. General description of the site (select one):

☑ Flat ☐ Rolling ☐ Hilly ☐ Steep Slopes ☐ Mountainous ☐ Other: _____

b. What is the steepest slope on the site (approximate percent slope)?

Less than 5% slope

c. What general types of soils are found on the site (for example, clay, sand, gravel, peat, muck)? If you know the classification of agricultural soils, specify them and note any prime farmland.

Sand and gravel

d. Are there surface indications or history of unstable soils in the immediate vicinity? If so, describe.

No

e. Describe the purpose, type, and approximate quantities of any filling or grading proposed. Indicate source of fill.

None

f. Could erosion occur as a result of clearing, construction, or use? If so, generally describe.

No

g. About what percent of the site will be covered with impervious surfaces after project construction (for example, asphalt or buildings)?

None

h. Proposed measures to reduce or control erosion, or other impacts to the earth, if any:

N/A

2. **Air**

a. **What types of emissions to the air would result from the proposal (i.e., dust, automobile, odors, industrial wood smoke) during construction and when the project is completed? If any, generally describe and give approximate quantities if known.**

Exhaust smoke from construction equipment

b. **Are there any off-site sources of emissions or odor that may affect your proposal? If so, generally describe.**

No

c. **Proposed measures to reduce or control emissions or other impacts to air, if any:**

Run equipment only as necessary.

3. **Water**

a. **Surface:**

1) **Is there any surface water body on or in the immediate vicinity of the site (including year-round and seasonal streams, saltwater, lakes, ponds, wetlands)? If yes, describe type and provide names. If appropriate, state what stream or river it flows into.**

Lake Washington

2) **Will the project require any work over, in, or adjacent to (within 200 feet) the described waters? If yes, please describe and attach available plans.**

We propose to repair the existing dock, replace (1) existing boat lift, install (2) boat lifts, and repair the existing moorage cover.

3) **Estimate the amount of fill and dredge material that would be placed in or removed from surface water or wetlands and indicate the area of the site that would be affected. Indicate the source of fill material.**

None

4) **Will the proposal require surface water withdrawals or diversions? Give general description, purpose, and approximate quantities if known.**

No

5) **Does the proposal lie within a 100-year floodplain? If so, note location on the site plan.**

No

6) **Does the proposal involve any discharges of waste materials to surface waters? If so, describe the type of waste and anticipated volume of discharge.** No
b. **<u>Ground</u>:** 1) **Will ground water be withdrawn, or will water be discharged to ground water? Give general description, purpose, and approximate quantities if known.** No
2) **Describe waste material that will be discharged into the ground from septic tanks or other sources, if any (for example: Domestic sewage; industrial, containing the following chemicals . . . ; agricultural; etc.). Describe the general size of the system, the number of such systems, the number of houses to be served (if applicable), or the number of animals or humans the system(s) are expected to serve.** None
c. **<u>Water runoff (including storm water)</u>:** 1) **Describe the source of runoff (including storm water) and method of collection and disposal, if any (include quantities, if known). Where will this water flow? Will this water flow into other waters? If so, describe.** N/A
2) **Could waste materials enter ground or surface waters? If so, generally describe.** N/A
3) **Proposed measures to reduce or control surface, ground, and runoff water impacts, if any:** N/A

4. Plants:

a. Check or circle types of vegetation found on the site:

- ☑ deciduous tree: alder, maple, aspen, other
- ☑ evergreen tree: fir, cedar, pine, other
- ☑ shrubs
- ☑ grass
- ☐ pasture
- ☐ crop or grain
- ☐ wet soil plants: cattail, buttercup, bullrush, skunk cabbage, other
- ☐ water plants: water lily, eelgrass, milfoil, other
- ☐ other types of vegetation

b. What kind and amount of vegetation will be removed or altered?

None

c. List threatened or endangered species known to be on or near the site.

No known threatened or endangered plant species are on or near the site.

d. Proposed landscaping, use of native plants, or other measures to preserve or enhance vegetation on the site, if any:

Please see associated native planting and vegetation plan.

5. Animals

a. Check any birds and animals which have been observed on or near the site or are known to be on or near the site:

☑ birds:	☐ hawk,	☐ heron,	☐ eagle,	☑ songbirds,	☐ other: _____
☑ mammals:	☑ deer,	☐ bear,	☐ elk,	☐ beaver,	☐ other: _____
☑ fish:	☑ bass,	☑ salmon,	☑ trout,	☐ herring,	☐ shellfish, ☐ other: _____

b. List any threatened or endangered species known to be on or near the site.

Potential for Steelhead salmon, Chinook salmon, and bull trout in the adjacent waters in Lake Washington.

c. Is the site part of a migration route? If so, explain.

Pacific Flyway Migration Pattern

d. Proposed measures to preserve or enhance wildlife, if any:

Mitigation including translucent construction material, native shoreline vegetation plan, and construction activities during approved fish friendly work windows.

6. Energy and natural resources **a. What kinds of energy (electric, natural gas, oil, wood stove, solar) will be used to meet the completed project's energy needs? Describe whether it will be used for heating, manufacturing, etc.** None
b. Would your project affect the potential use of solar energy by adjacent properties? If so, generally describe. No
c. What kinds of energy conservation features are included in the plans of this proposal? List other proposed measures to reduce or control energy impacts, if any: N/A

7. Environmental health **a. Are there any environmental health hazards, including exposure to toxic chemicals, risk of fire and explosion, spill, or hazardous waste, which could occur as a result of this proposal? If so, describe.** No
1) Describe special emergency services that might be required. None
2) Proposed measures to reduce or control environmental health hazards, if any: N/A
b. <u>Noise:</u> **1) What types of noise exist in the area which may affect your project (for example: traffic, equipment, operation, other)?** None

2) What types and levels of noise would be created by or associated with the project on a short-term or a long-term basis (for example: traffic, construction, operation, other)? Indicate what hours noise would come from the site. Noise from construction equipment.
3) Proposed measures to reduce or control noise impacts, if any: Operate machinery only as necessary.

8. Land and shoreline use **a. What is the current use of the site and adjacent properties?** Single Family Residential
b. Has the site been used for agriculture? If so, describe. No
c. Describe any structures on the site. Single family residence
d. Will any structures be demolished? If so, what? No
e. What is the current zoning classification of the site? R30
f. What is the current comprehensive plan designation of the site? Single Family Residential
g. If applicable, what is the current shoreline master program designation of the site? Shoreline Residential
h. Has any part of the site been classified as an "environmentally sensitive" area? If so, specify. No
i. Approximately how many people would reside or work in the completed project? None

j. **Approximately how many people would the completed project displace?**

None

k. **Proposed measures to avoid or reduce displacement impacts, if any:**

N/A

l. **Proposed measures to ensure the proposal is compatible with existing and projected land uses and plans, if any:**

To ensure lacal state and federal compliance, the project will include an SSDP and SEPA review by the city of Medina, An HPA permit from WDFW, and a federal section 10 permit from the US Army CORPS of Engineers

9. **Housing**

a. **Approximately how many units would be provided, if any? Indicate whether high, mid-middle or low-income housing.**

None

b. **Approximately how many units, if any, would be eliminated? Indicate whether high, middle, or low-income housing.**

None

c. **Proposed measures to reduce or control housing impacts, if any:**

N/A

10. **Aesthetics**

a. **What is the tallest height of any proposed structure(s), not including antennas; what is the principal exterior building material(s) proposed?**

9' above OHWM

b. **What views in the immediate vicinity would be altered or obstructed?**

None

c. **Proposed measures to reduce or control aesthetic impacts, if any:**

N/A

11. Light and glare

a. What type of light or glare will the proposal produce? What time of day would it mainly occur?

None

b. Could light or glare from the finished project be a safety hazard or interfere with views?

No

c. What existing off-site sources of light or glare may affect your proposal?

None

d. Proposed measures to reduce or control light and glare impacts, if any:

N/A

12. Recreation

a. What designated and informal recreational opportunities are in the immediate vicinity?

Single family residential - swimming and recreation

b. Would the proposed project displace any existing recreational uses? If so, describe.

No

c. Proposed measures to reduce or control impacts on recreation, including recreation opportunities to be provided by the project or applicant, if any:

N/A

13. Historic and cultural preservation

a. Are there any places or objects listed on, or proposed for, national, state, or local preservation registers known to be on or next to the site? If so, generally describe.

Unknown

b. Generally describe any landmarks or evidence of historic, archaeological, scientific, or cultural importance known to be on or next to the site.

N/A

c. **Proposed measures to reduce or control impacts, if any:**

Representatives of the local tribes will be invited to be on-site during any ground disturbing activity, if any cultural artifacts are found, construction will halt pending recommendations from tribal representatives.

14. Transportation

a. **Identify public streets and highways serving the site, and describe proposed access to the existing street system. Show on site plans, if any.**

Overlake Drive W

b. **Is site currently served by public transit? If not, what is the approximate distance to the nearest transit stop?**

Closest transit stop located 0.8 miles away at NE 1st St & Lake Wash. Blvd NE

c. **How many parking spaces would the completed project have? How many would the project eliminate?**

None

d. **Will the proposal require any new roads or streets, or improvements to existing roads or streets, not including driveways? If so, generally describe (indicate whether public or private).**

No

e. **Will the project use (or occur in the immediate vicinity of) water, rail, or air transportation? If so, generally describe.**

No

f. **How many vehicular trips per day would be generated by the completed project? If known, indicate when peak volumes would occur.**

None

g. **Proposed measures to reduce or control transportation impacts, if any:**

N/A

15. Public services

a. **Would the project result in an increased need for public services (for example: fire protection, police protection, health care, schools, other)? If so, generally describe.**

No

b. Proposed measures to reduce or control direct impacts on public services, if any.

N/A

16. Utilities

a. **Select utilities currently available at the site:**

☑ electricity ☐ natural gas ☑ water ☑ refuse service ☑ telephone ☐ sanitary sewer ☐ other: _____

b. Describe the utilities that are proposed for the project, the utility providing the service, and the general construction activities on the site or in the immediate vicinity which might be needed.

None

Signature

I certify (or declare) under penalty of perjury under the laws of the State of Washington that the above answers are true and complete to the best of my knowledge. I understand that the lead agency is relying on them to make its decision.

Signature of person preparing the checklist: Zion Napier

Date checklist prepared: 12/31/2024

Exhibit 10
P-24-024 & P-24-025
7887 Overlake Drive West

DETERMINATION OF NON-SIGNIFICANCE

Proposal: Request for a SEPA Threshold Determination in conjunction with a Project Action to replace an existing dock's solid decking with grated decking, replace existing moorage cover with a translucent cover, replace an existing boat lift, and install two additional boat lifts for a total of three (3) boat lifts associated with the existing non-conforming dock. The project includes planting native vegetative species along the property's shoreline frontage.

File No. P-24-024 & P-24-025

Applicant: Seaborn Pile Driving (agent)
Attn: Ted Burns, CEO

7887 Overlake Drive W LLC (owner)

Site Address: 7887 Overlake Drive W, Medina, WA 98039

Lead Agency: City of Medina

The lead agency for this proposal has determined that it does not have a probable significant adverse impact on the environment. An Environmental Impact Statement (EIS) is not required under RCW 43.21C.030(2)(c). This decision was made after a review of the completed SEPA Environmental Checklist and other information on file with the lead agency. This information is available to the public, upon request, by contacting Medina City Hall, Attn: Development Services, 501 Evergreen Point Rd., Medina, WA 98039.

Date of Issuance and Publication: Wednesday, January 7, 2026
Deadline to Submit Comments: Wednesday, January 21, 2026

This Determination of Non-significance (DNS) is issued pursuant to WAC 197-11-340.

Responsible Official: Kimberly Gunderson

Title: Medina Planning Consultant and SEPA Responsible Official

Address: 501 Evergreen Point Rd., Medina, WA 98039 **Telephone:** 253-389-1864

Email: kmahoney.planning@gmail.com

Signature: _____ **Date:** January 6, 2026
Kimberly Gunderson, Planning Consultant

APPEAL PROCESS: Any party of record may appeal a Determination of Non-significance (DNS). The Appeal must be made to the City of Medina Hearing Examiner within **fourteen (14) days** of the Threshold Determination becoming final, per MMC 16.80.220. Appeals must be in writing and contain specific factual objections. Comments may be submitted along with the appropriate Appeal fee to the above address. This may be the only opportunity to comment on the environmental impacts of this proposal.

Posted notice is not to be removed, mutilated, or concealed in any way.

SITE PLAN

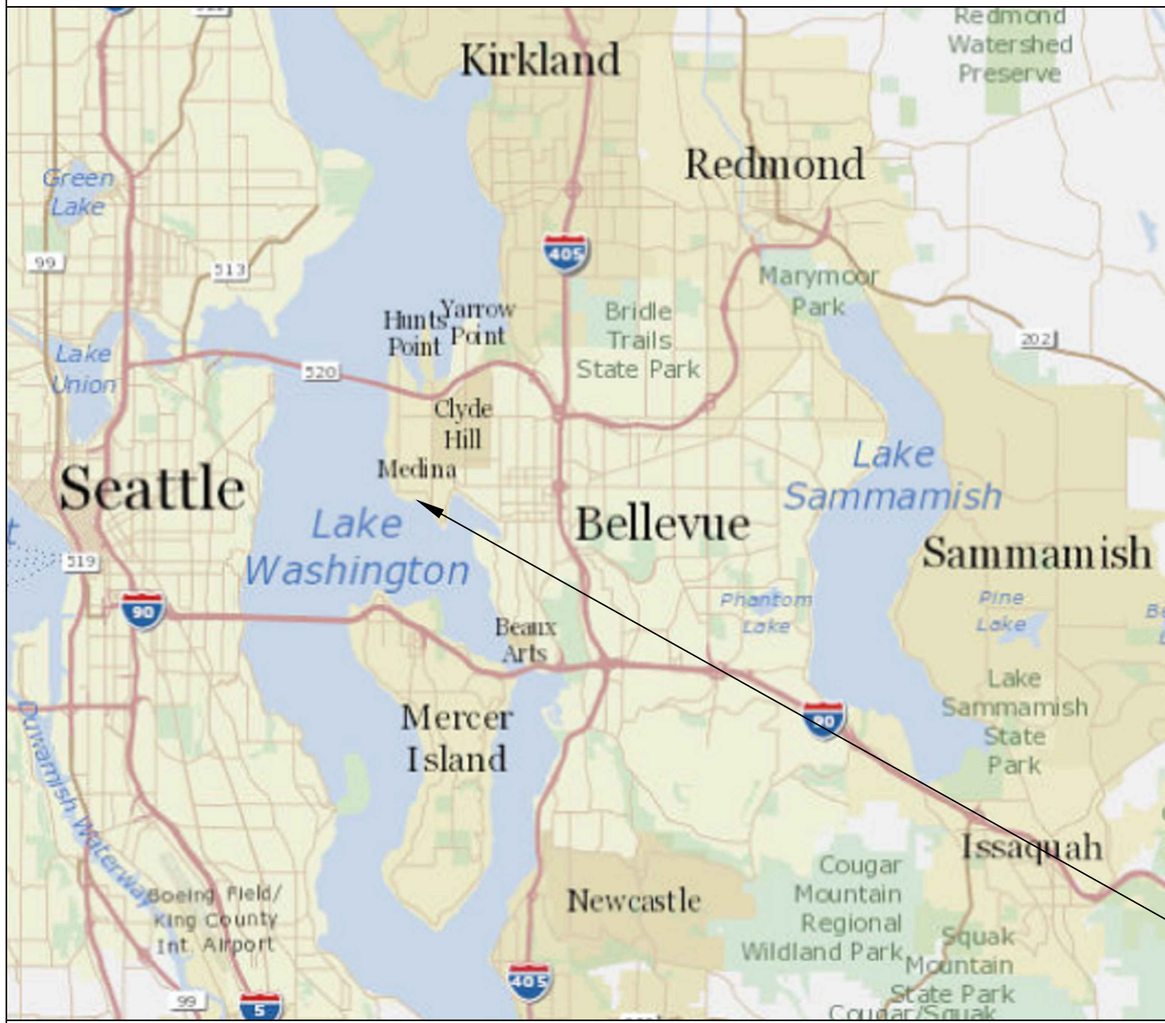

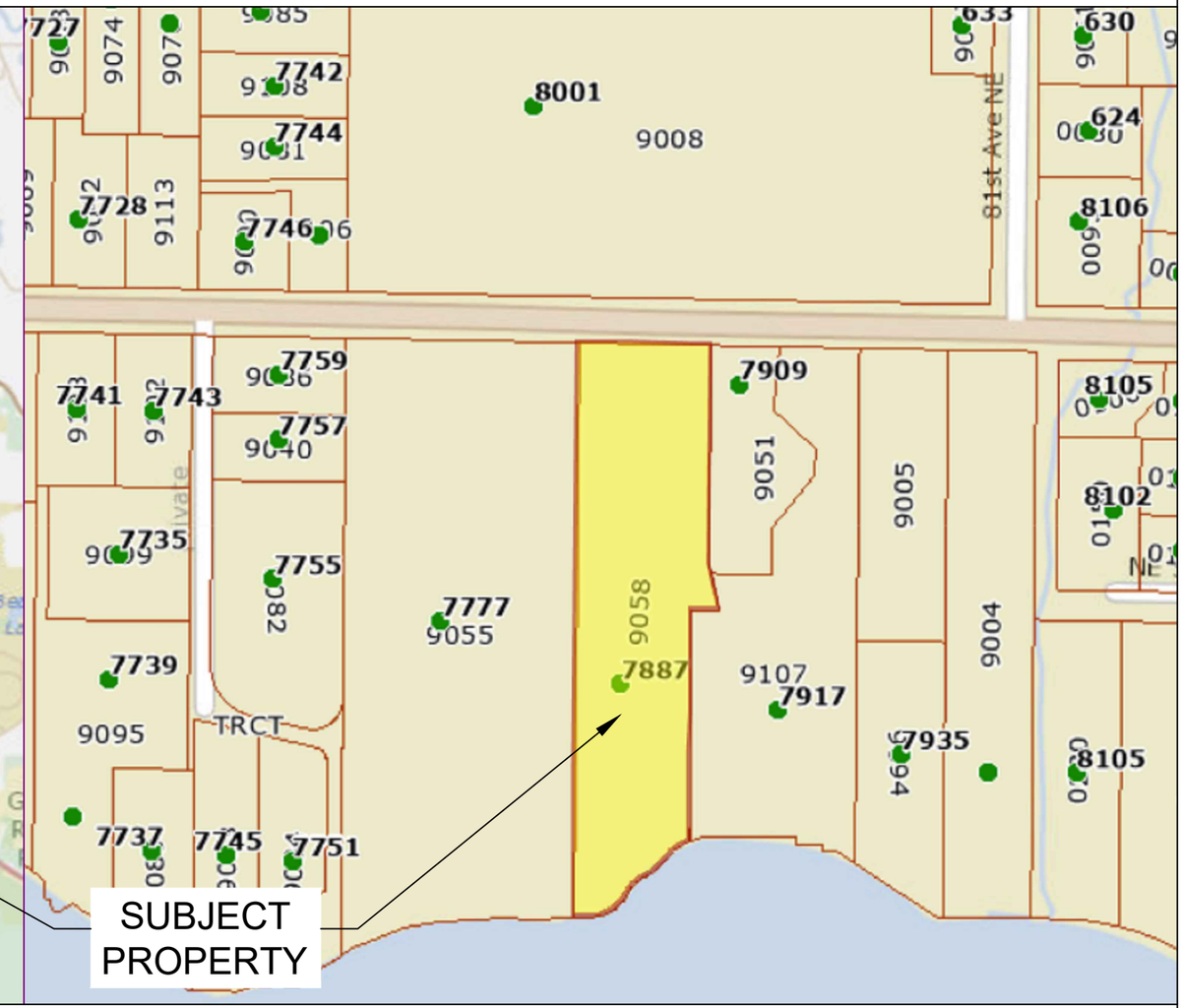

County: King County
Location: Lake Washington

Applicant: Shihara Residence
7887 Overlake Dr
Medina, WA 98009

Created: 11/01/23

Last Updated: 12/29/2025 12:01 PM AndrewTon

Datum: CORPS OF ENGINEERS 1919
NE Quarter Of Section 36, Township 25, Range 04

Adjacent Owners:
BROTMAN SUSAN R
7917 OVERLAKE DR W 98039
BLUE WATER REALTY LLC
7777 OVERLAKE DR W 98039

Pin: 362504-9058

Legal Description: POR OF GL'S 1 & 2 OF SD SEC DAF - BEG AT NXN OF SLY LN NE 6 TH ST & W LN OF ELY 65.61 FT OF SD GL 2 TH SLY PLW ELY LN OF SD GL 2 TO MEANDER LN OF ELY SH OF LK WA TH NELY ALG SD MEANDER LN TO ELY LN OF SD GL 2 TH CONT NELY ALG SD MEANDER LN 115.50 FT TH NLY ALG A LN WCH NXN AAP 30 FT S & 1236.38 FT W PLW SEC LN OF NE COR OF SD GL 1 TO SLY LN OF SD NE 6 TH ST TH WLY ALG SD SLY LN TO TPOB TGW POR BAAP 1236.38 FT W & 510 FT S OF NE COR OF GL 1 SD PT BEING ON S MGN OF NE 6TH ST TH S 89-02-59 E ALG SD S MGN 22 FT TH S 00-21-59 W PLW E LN OF GL 1 286.50 FT TH S 12-52-00 E 61.26 FT TH N 89-38-01 W 36.02 FT TH N 00-21-59 E PLW E LN OF SD GL 1 346.36 FT TO POB TGW 2ND CLASS SHORE LANDS ADJ AKA PAR A OF MEDING LLA #91-5 PER REC #911106-0341

Plat Block:
Plat Lot:

Parcel	Dock
LAT: 47.61513	LAT: 47.614011
LONG: -122.23338	LONG: -122.233669

BUILT BY SEABORN · ESTD 1947 ·

Seaborn Pile Driving
1080 W Ewing St
Seattle, WA 98119

Office: 206-236-1700 ext. 5
www.seabornpiledriving.com

Scope of Work: We propose to repair the existing dock, replace (1) existing boat lift, install (2) boat lifts, and repair the existing moorage cover.

Exhibit 11
P-24-024 & P-24-025
7887 Overlake Drive West

SHEET 1.0

GENERAL NOTES:

MATERIALS SPEC LIST:

Boat Lifts: Aluminum
SL10014ARW - 108" x 141"

Moorage Cover:
* Repaired cover will be constructed with translucent material

Decking Material: FRPP - Fiberglass reinforced polypropylene
Light permeable percentage:
* Surface - 43%
* 18" Dock Height - 61%

Sewer:
* All sewer is field verified by probing the lake bed manually during the allowed work windows for the area.

Preservatives
* Treatment with pentachlorophenol, creosote, chromate copper arsenate, or similar toxic compounds will not be applied or used on materials comprising this construction project.

CODE REFERENCES: Medina

We are applying for the permit to be reviewed under the:

16.65.60. - Repair and maintenance of overwater structures.
20.65.120 - Boatlifts

BUILT BY SEABORN · ESTD 1947 ·

Seaborn Pile Driving
1080 W Ewing St
Seattle, WA 98119

Office: 206-236-1700 ext. 5
www.seabornpiledriving.com

Scope of Work: We propose to repair the existing dock, replace (1) existing boat lift, install (2) boat lifts, and repair the existing moorage cover.

County: King County
Location: Lake Washington

Applicant: Shihara Residence
7887 Overlake Dr
Medina, WA 98009

Created: 11/01/23
Last Updated: 12/29/2025 12:01 PM AndrewTon

Datum: CORPS OF ENGINEERS 1919
NE Quarter Of Section 36, Township 25, Range 04

Adjacent Owners:
BROTMAN SUSAN R
7917 OVERLAKE DR W 98039
BLUE WATER REALTY LLC
7777 OVERLAKE DR W 98039

SHEET 2.0

EXISTING CONDITIONS

CLEAN UP LAKE AROUND PROJECT

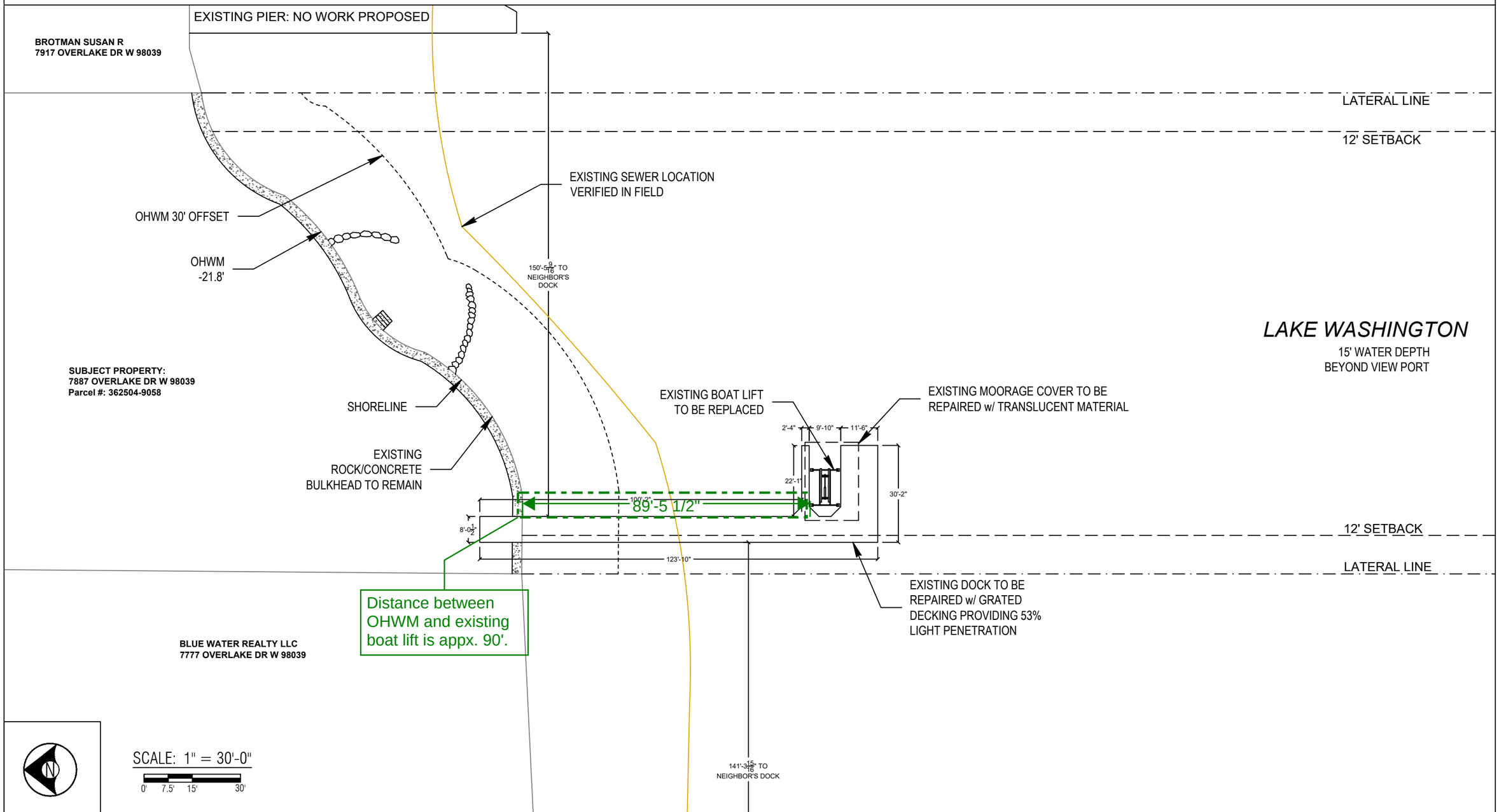

County: King County
Location: Lake Washington

Applicant: Shihara Residence
7887 Overlake Dr
Medina, WA 98009

Created: 11/01/23

Last Updated: 12/29/2025 12:01 PM AndrewTon

Datum: CORPS OF ENGINEERS 1919
NE Quarter Of Section 36, Township 25, Range 04

Adjacent Owners:
BROTMAN SUSAN R
7917 OVERLAKE DR W 98039
BLUE WATER REALTY LLC
7777 OVERLAKE DR W 98039

BUILT BY SEABORN · ESTD 1947 ·

Seaborn Pile Driving
1080 W Ewing St
Seattle, WA 98119

Office: 206-236-1700 ext. 5
www.seabornpiledriving.com

Scope of Work: We propose to repair the existing dock, replace (1) existing boat lift, install (2) boat lifts, and repair the existing moorage cover.

SHEET 3.0

PROPOSED CONDITIONS

CLEAN UP LAKE AROUND PROJECT

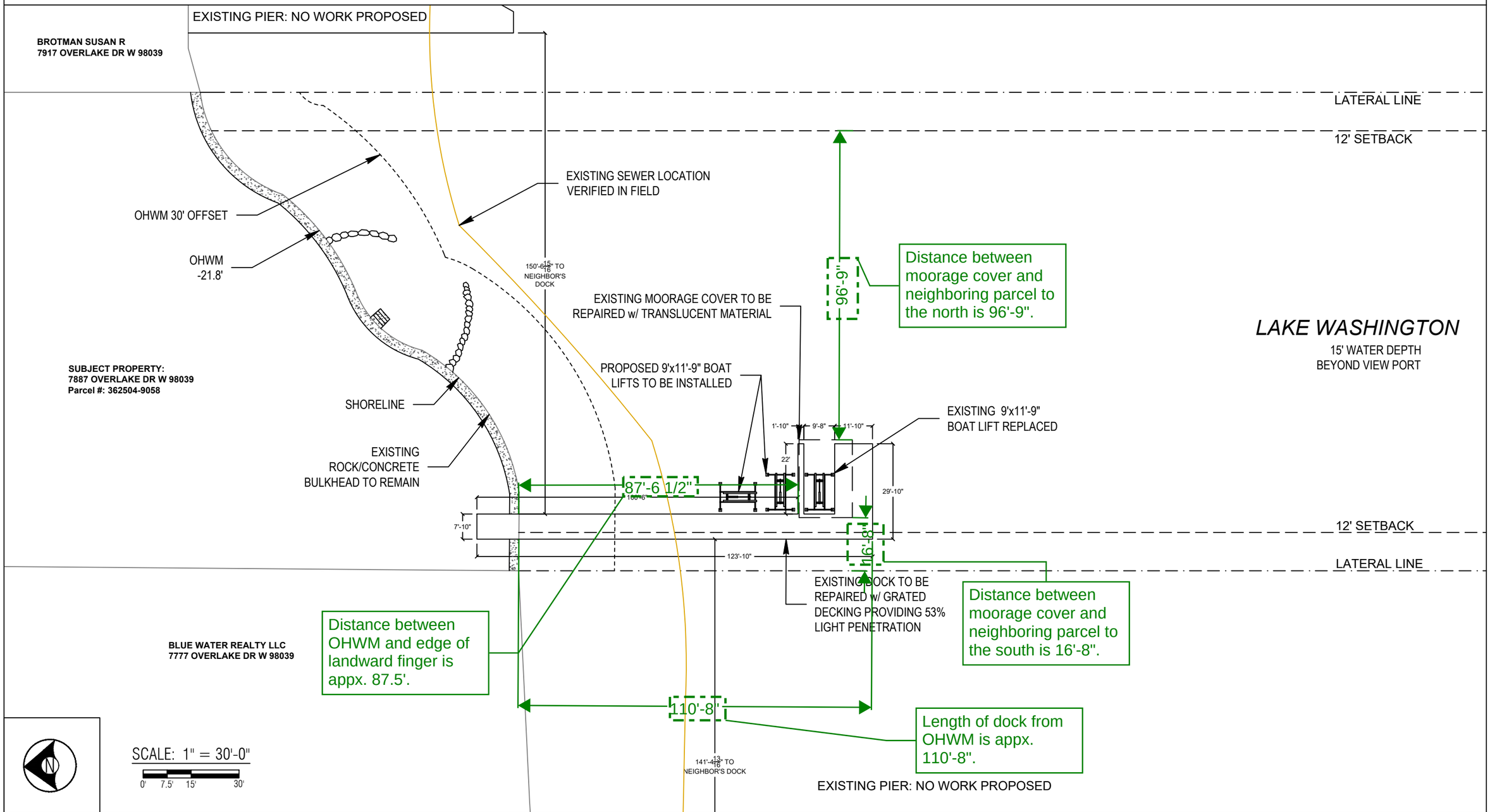

County: King County
Location: Lake Washington

Applicant: Shihara Residence
7887 Overlake Dr
Medina, WA 98009

Created: 11/01/23
Last Updated: 12/29/2025 12:01 PM AndrewTon

Datum: CORPS OF ENGINEERS 1919
NE Quarter Of Section 36, Township 25, Range 04

Adjacent Owners:
BROTMAN SUSAN R
7917 OVERLAKE DR W 98039
BLUE WATER REALTY LLC
7777 OVERLAKE DR W 98039

BUILT BY SEABORN · ESTD 1947 ·

Seaborn Pile Driving
1080 W Ewing St
Seattle, WA 98119

Office: 206-236-1700 ext. 5
www.seabornpiledriving.com

Scope of Work: We propose to repair the existing dock, replace (1) existing boat lift, install (2) boat lifts, and repair the existing moorage cover.

SHEET 4.0

PIER DETAILS - EXISTING/PROPOSED PLAN VIEW

LEGEND

○ (26) EXISTING PILES - NO WORK TO BE DONE

Existing Pier Overwater: 1,235 sqft
Existing Pier total: 1,316 sqft

Repaired Pier Overwater: 1,174 sqft
Repaired Pier total: 1,274 sqft

**Grated decking is 53% light permeable

NOTE: DOCK TO BE REBUILT WITH GRATED DECKING, INCLUDING STRINGERS TO MATCH THE GRATING SCREWS. NO OTHER CHANGE IN FRAMING.

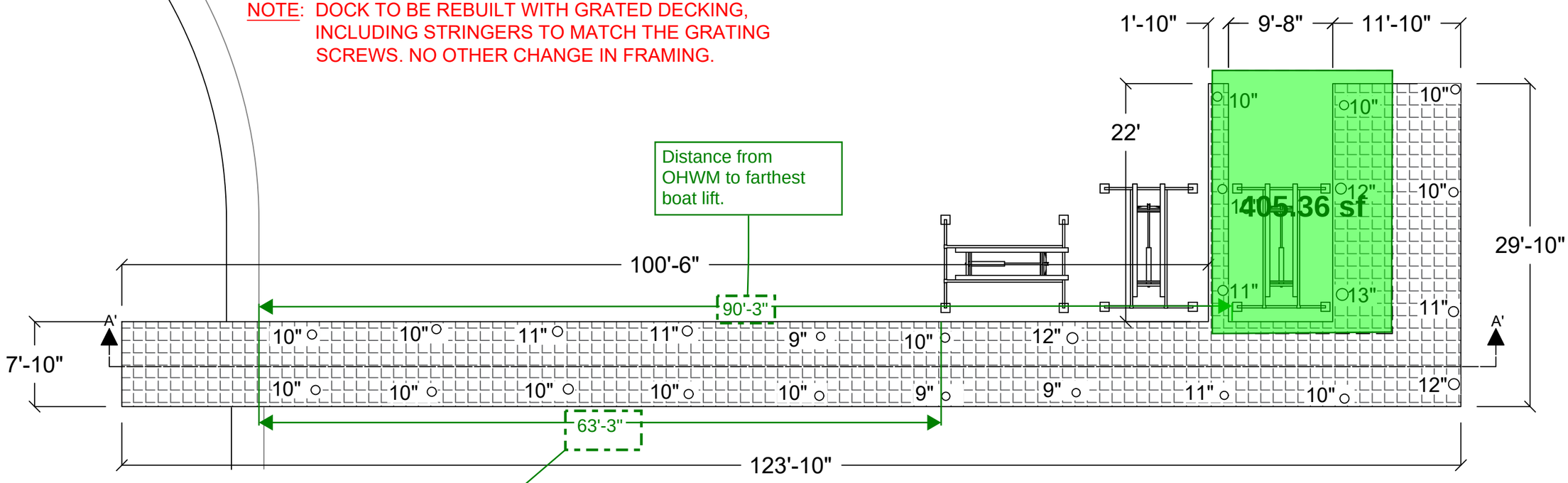

NTS
PLAN VIEW

BUILT BY SEABORN · ESTD 1947 ·

Seaborn Pile Driving
1080 W Ewing St
Seattle, WA 98119

Office: 206-236-1700 ext. 5
www.seabornpiledriving.com

Scope of Work: We propose to repair the existing dock, replace (1) existing boat lift, install (2) boat lifts, and repair the existing moorage cover.

County: King County
Location: Lake Washington

Applicant: Shihara Residence
7887 Overlake Dr
Medina, WA 98009

Created: 11/01/23
Last Updated: 12/29/2025 12:01 PM AndrewTon

Datum: CORPS OF ENGINEERS 1919
NE Quarter Of Section 36, Township 25, Range 04

Adjacent Owners:
BROTMAN SUSAN R
7917 OVERLAKE DR W 98039
BLUE WATER REALTY LLC
7777 OVERLAKE DR W 98039

SHEET 5.0

NWS-2023-XXX
PAGE 5 OF 9

PIER DETAILS EXISTING/PROPOSED - SECTION VIEW

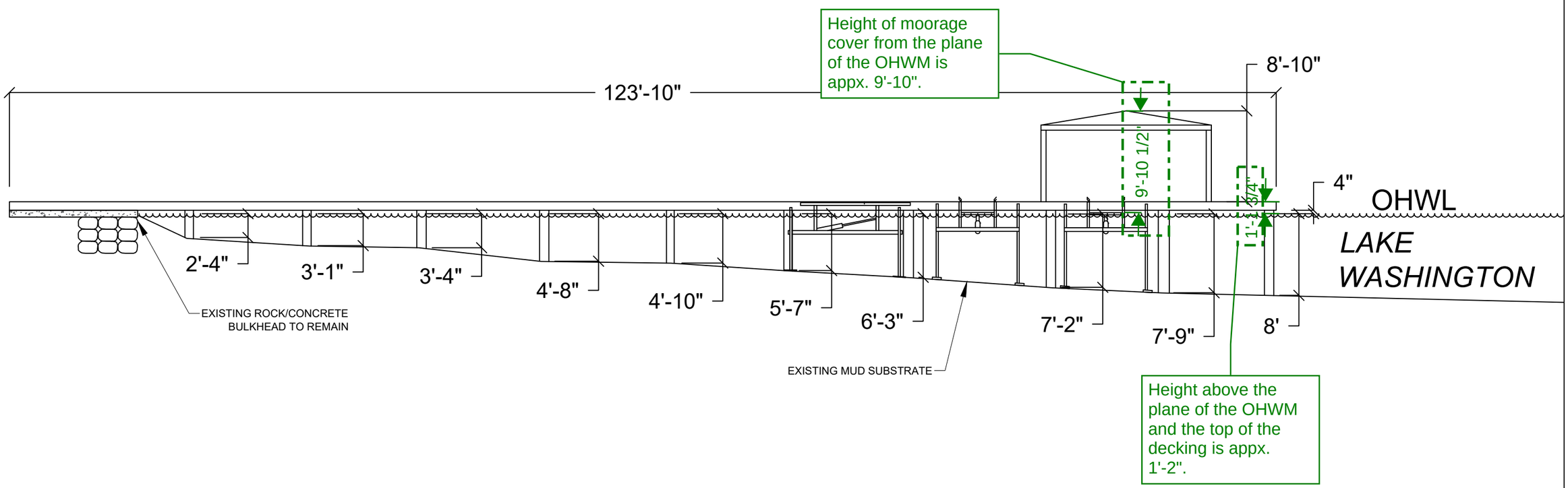

NTS

SECTION VIEW: A'-A'

BUILT BY SEABORN · ESTD 1947 ·

Seaborn Pile Driving
1080 W Ewing St
Seattle, WA 98119

Office: 206-236-1700 ext. 5
www.seabornpiledriving.com

Scope of Work: We propose to repair the existing dock, replace (1) existing boat lift, install (2) boat lifts, and repair the existing moorage cover.

County: King County
Location: Lake Washington

Applicant: Shihara Residence
7887 Overlake Dr
Medina, WA 98009

Created: 11/01/23
Last Updated: 12/29/2025 12:01 PM AndrewTon

Datum: CORPS OF ENGINEERS 1919
NE Quarter Of Section 36, Township 25, Range 04

Adjacent Owners:
BROTMAN SUSAN R
7917 OVERLAKE DR W 98039
BLUE WATER REALTY LLC
7777 OVERLAKE DR W 98039

SHEET 6.0

NWS-2023-XXX
PAGE 6 OF 9

BMP INFORMATION

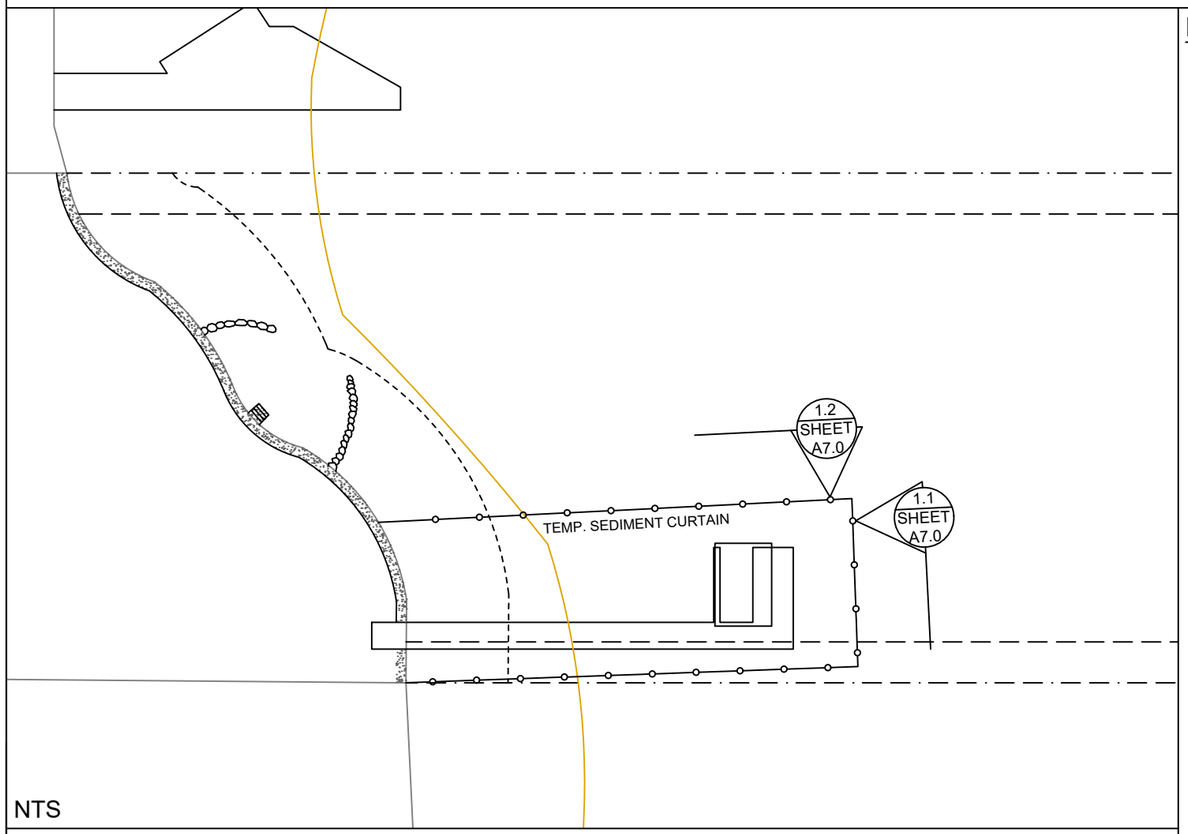

NTS

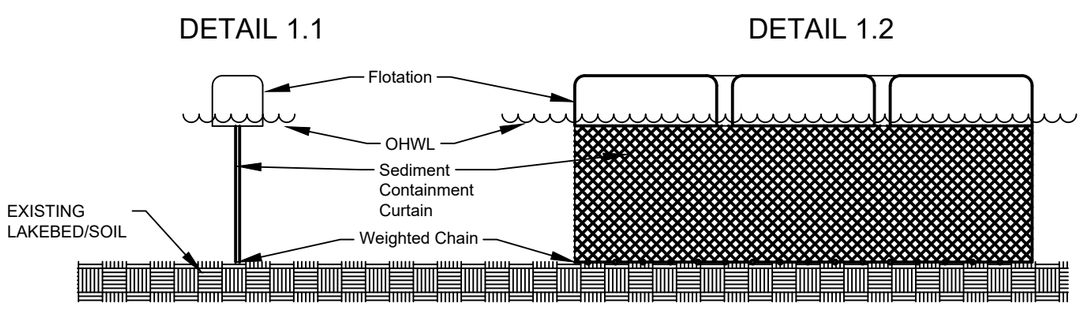

DETAIL 1.1 & 1.2

BMP NOTES:

A. Constant vigilance shall be kept for the presence of protected fish species during all aspects of the proposed action, particularly during in-water activities such as vessel movement, deployment of anchors & spuds, pile driving, dredging, and placement of gravels and other fill.

1. The project manager shall designate an appropriate number of competent observers to survey the project site and adjacent areas for protected species, including the presence of fish as conditions allow.
2. Visual surveys shall be made prior to the start of work each day, and prior to resumption of work following any break of more than an hour. Periodic additional visual surveys throughout the work day are strongly recommended.
3. All in-water work shall be done during the in-water work window for the waterbody. Where there is a difference between the USCOE and WDFW work windows, the overlap of the two shall apply.
4. All pile driving and extraction shall be postponed or halted when obvious aggregations or schooling of fish are observed within 50 yards of that work, and shall only begin/resume after the animals have voluntarily departed the area.
5. When piloting vessels, vessel operators shall operate at speeds and power settings to avoid grounding vessels, and minimize substrate scour and mobilization of bottom sediments.

B. No contamination of the marine environment shall result from project-related activities.

1. Appropriate materials to contain and clean potential spills shall be stored and readily available at the work site and/or aboard project-related vessels.
2. The project manager and heavy equipment operators shall perform daily pre-work equipment inspections for cleanliness and leaks. All heavy equipment operations shall be postponed or halted should a leak be detected, and shall not proceed until the leak is repaired and the equipment is cleaned.
3. To the greatest extent practicable, utilize biodegradable oils for equipment that would be operated in or near water.
4. Fueling of land-based vehicles and equipment shall take place at least 50 feet away from the water, preferably over an impervious surface. Fueling of vessels shall be done at approved fueling facilities.
5. Turbidity and siltation from project-related work shall be minimized and contained through the appropriate use of erosion control practices, effective silt containment devices, and the curtailment of work during adverse weather and tidal/flow conditions.
6. All wastes shall be collected and contained for proper disposal at approved upland disposal sites appropriate for the material(s).
7. When removing piles and other similarly treated wood, containment curtain must fully enclose the work area. Wood debris, oils, and any other materials released into lake waters must be collected, removed, and properly disposed of at approved disposal sites.
8. All in- and over-water wood cutting would be limited to the minimum required to remove the subject wood component, and all cutting work should be enclosed within floating containment curtain.
9. When removing piles, no actions shall be taken that would cause adhering sediments to return to lake waters.
10. Above-water containment shall be installed around removed piles to prevent sediment laden waters from returning to lake waters.
11. Construction staging (including stocking of materials, etc.) will occur on the supply barge.
12. All Exposed wood to be used on the project will be treated with a an agency approved treatment.

BUILT BY SEABORN · ESTD 1947 ·

Seaborn Pile Driving
1080 W Ewing St
Seattle, WA 98119

Office: 206-236-1700 ext. 5
www.seabornpiledriving.com

Scope of Work: We propose to repair the existing dock, replace (1) existing boat lift, install (2) boat lifts, and repair the existing moorage cover.

County: King County
Location: Lake Washington

Applicant: Shihara Residence
7887 Overlake Dr
Medina, WA 98009

Created: 11/01/23
Last Updated: 12/29/2025 12:01 PM AndrewTon

Datum: CORPS OF ENGINEERS 1919
NE Quarter Of Section 36, Township 25, Range 04

Adjacent Owners:
BROTMAN SUSAN R
7917 OVERLAKE DR W 98039
BLUE WATER REALTY LLC
7777 OVERLAKE DR W 98039

SHEET
7.0

MITIGATION PLAN

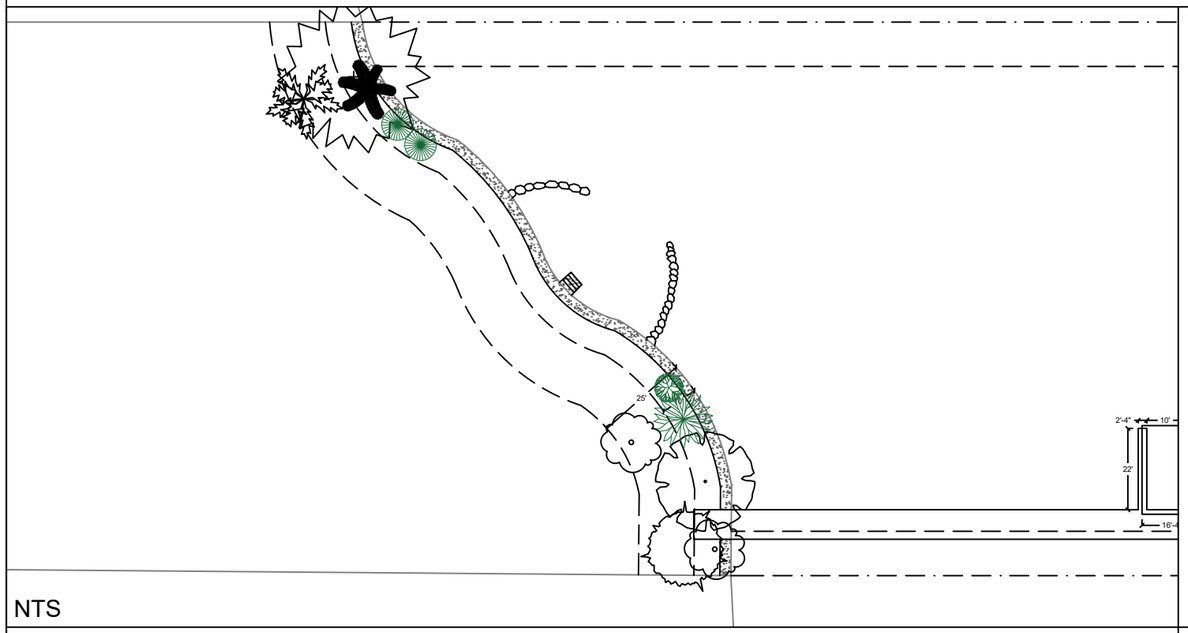

NTS

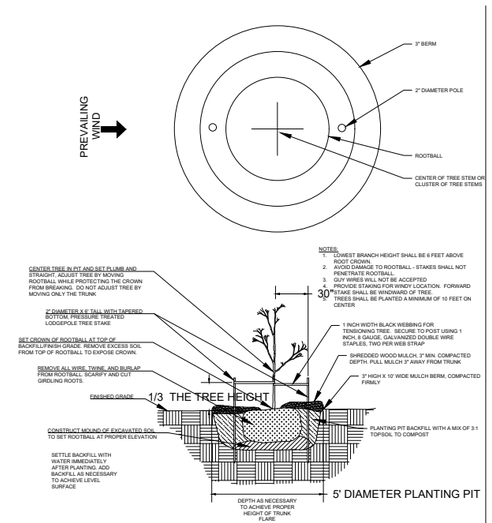

TREE PLANTING DETAILS (NTS)

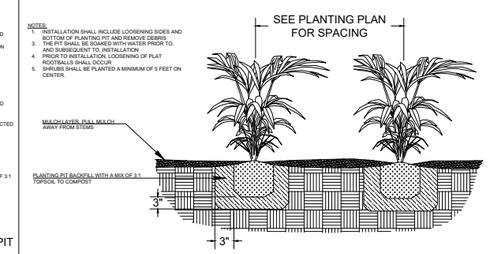

SHRUB AND GROUNDCOVER PLANTING DETAILS (NTS)

Notes:

1.The property owner shall implement and abide by the shoreline planting plan, including the installation of the identified species, in the identified locations. Shrubs shall be planted at least five feet on center, and trees shall be planted at least ten feet on center.

2.For best plant survival, planting should be completed the first October through March period concurrent with or immediately following the work authorized by this permit. A report, as-built drawing and photographs demonstrating the plants have been installed or a report on the status of project construction will be submitted to the U.S. Army Corps of Engineers, Seattle District, Regulatory Branch, within 12 months from the date of permit issuance. This reporting requirement may be met by completing and submitting a U.S. Army Corps of Engineers approved Report for Mitigation Work Completion form.

3.The property owner shall preserve in good health 100% of shoreline planting plan vegetation for as long as the structures that have been permitted under the RAP program remain in place. Plants that die must be replaced with the appropriate plant type (i.e. tree for tree, shrub for shrub) from the RAP Plant List.

4.The property owner shall monitor the survival of shoreline planting plan vegetation for five years (Monitoring Years 1-5) after the U.S. Army Corps of Engineers accepts the as-built report. The property owner shall also submit annual monitoring reports to the U.S. Army Corps of Engineers each year during this period. Each annual monitoring report will include written and photographic documentation that the performance standards are being met, including documentation of plant mortality and replacement. Photos will be taken from established points and used repeatedly for each monitoring year. In addition to photos at designated points, photo documentation will include a panoramic view of the entire planting area. Submitted photos will be formatted on standard 8 1/2 x 11" paper, dated with the date the photo was taken, and clearly labeled with the direction from which the photo was taken. The photo location points will be identified on an appropriate drawing. Annual shoreline planting monitoring reports will be submitted to the U.S. Army Corps of Engineers, Seattle District, Regulatory Branch, by November 31 of each monitoring year. This reporting requirement may be met by completing and submitting a U.S. Army Corps of Engineers approved Mitigation Planting Monitoring Report form.

PROPOSED PLANTING SPECIES/QUANTITIES

SYMBOL	LATIN NAME	COMMON NAME	QTY	SIZE
	Pinus contorta v contorta	Shore pine	1	3 ft
	Rosa nutkana	Nootka Rose	1	1 Gallon
	Philadelphus lewisii	Mock Orange	2	1 Gallon

PLANTS: Shrubs to be installed 5ft on center and trees to be installed 10ft on center.

BUILT BY SEABORN · ESTD 1947 ·

Seaborn Pile Driving
1080 W Ewing St
Seattle, WA 98119

Office: 206-236-1700 ext. 5
www.seabornpiledriving.com

Scope of Work: We propose to repair the existing dock, replace (1) existing boat lift, install (2) boat lifts, and repair the existing moorage cover.

County: King County
Location: Lake Washington

Applicant: Shihara Residence
7887 Overlake Dr
Medina, WA 98009

Created: 11/01/23
Last Updated: 12/29/2025 12:01 PM AndrewTon

Datum: CORPS OF ENGINEERS 1919
NE Quarter Of Section 36, Township 25, Range 04

Adjacent Owners:
BROTMAN SUSAN R
7917 OVERLAKE DR W 98039
BLUE WATER REALTY LLC
7777 OVERLAKE DR W 98039

SHEET 8.0

EXISTING PLANT PLAN

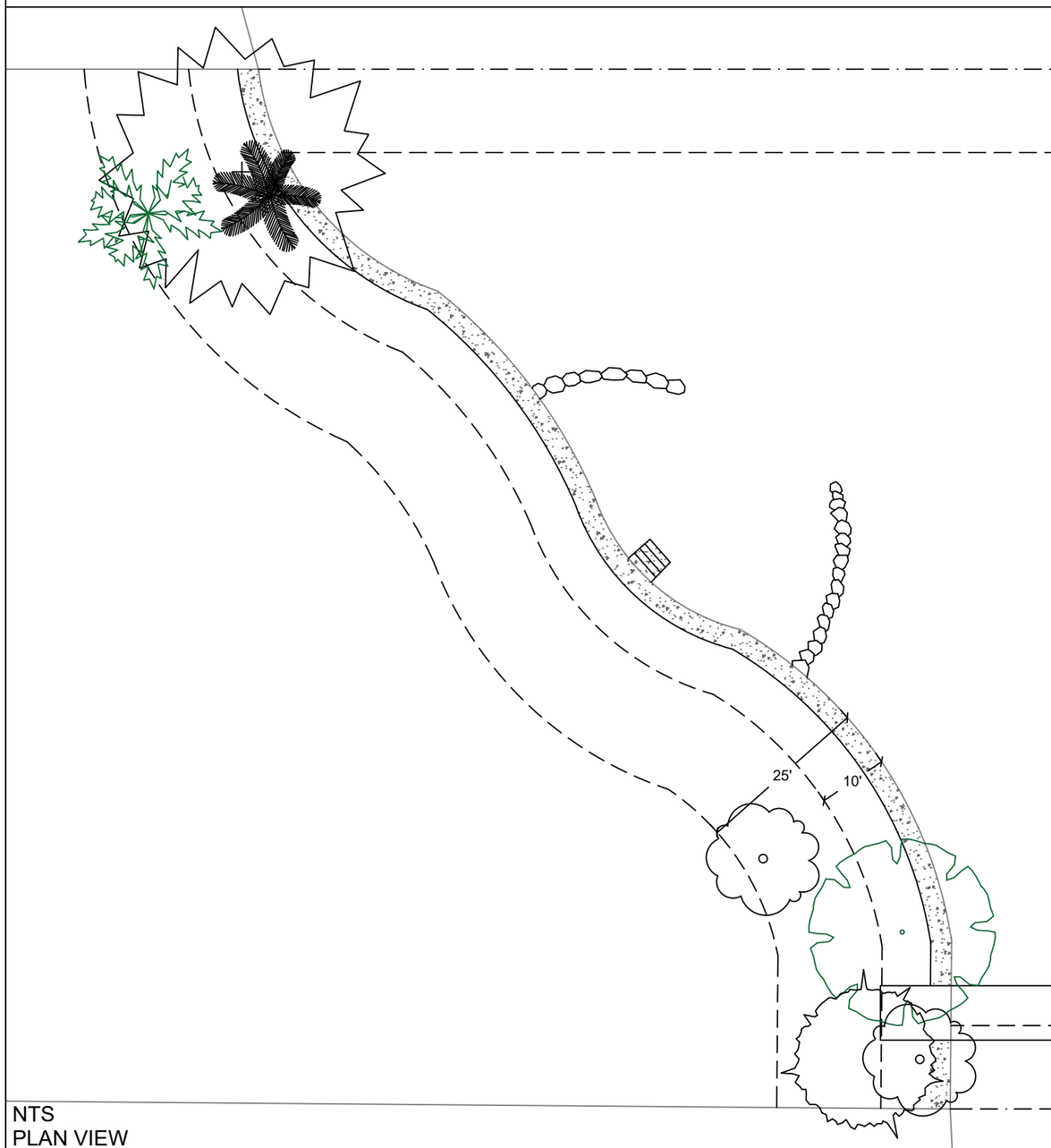

NTS
PLAN VIEW

EXISTING PLANTING SPECIES/QUANTITIES

SYMBOL	SCIENTIFIC NAME	COMMON NAME	QTY	SIZE
	Betula pendula	Silver Birch	1	~20 ft
	Hydrangea macrophylla	Bigleaf Hydrangea	2	varies
	Salix salicaceae	Salix Willow	1	~ 20ft
	Thuja plicata	Western Red Cedar	1	~ 40ft
	Nyssa sylvatica	Black Gum Tree	1	~ 20ft
	Amelanchier arborea	Common Serviceberry	1	~ 15ft

REQUESTING CREDIT OF (1) WESTERN RED CEDAR

EXISTING PLANTS TABLE

County: King County
Location: Lake Washington

Applicant: Shihara Residence
7887 Overlake Dr
Medina, WA 98009

Created: 11/01/23

Last Updated: 12/29/2025 12:01 PM AndrewTon

Datum: CORPS OF ENGINEERS 1919
NE Quarter Of Section 36, Township 25, Range 04

Adjacent Owners:
BROTMAN SUSAN R
7917 OVERLAKE DR W 98039
BLUE WATER REALTY LLC
7777 OVERLAKE DR W 98039

BUILT BY SEABORN · ESTD 1947 ·

Seaborn Pile Driving
1080 W Ewing St
Seattle, WA 98119

Office: 206-236-1700 ext. 5
www.seabornpiledriving.com

Scope of Work: We propose to repair the existing dock, replace (1) existing boat lift, install (2) boat lifts, and repair the existing moorage cover.

SHEET 9.0

Exhibit 12
P-24-024 & P-24-025
7887 Overlake Drive West

VELOPMENT
RVICES
WASHINGTON
501 EVERGREEN POINT ROAD MEDINA, WA 98039
PHONE: 425-233-6414/6400

Water Depth Waiver Request

Center Lift

Instructions:

1. The Medina Shoreline Master Program requires overwater structures such as piers, floats, moorage covers and boatlifts to have a minimum water depth. (See Chapter 16.65 MMC for water depth standards.)
2. This form may be used to request a waiver from the minimum water depth standard. If requesting a water depth waiver for more than one structure, please complete a separate water depth waiver request for each.
3. Please complete this form and answer the criteria thoroughly. Attach supporting documents as necessary. Your answers must satisfy the criteria to receive approval of the waiver. Requests will be denied if they do not satisfy the criteria.

General Information

Property Owner Name: Bill Shihara	**Water depth waiver request is for (check one):**
Property Address: 7887 Overlake Drive, Medina	☐ Pier/ Float ☐ Covered Moorage ☒ Boatlift/ Jet Ski Lift ☐ Buoy/ Moorage Pile

Contact Information

Contact Person: Seaborn Companies	**Phone:** 206-236-1700
~~Dray Davick~~ TED BURNS	**Email:** permits@seaborncompanies.com
Mailing Address: 1080 W. Ewing Pl. Suite 300	**City:** Seattle **State:** WA **Zip:** 98119

Approval Criteria

Please answer the following and provide supporting documentation.

1. Compliance with the water depth is not *feasible* without the need for a shoreline variance:

"Feasible" means an action, such as a development project, mitigation, or preservation requirement, that meets all the following conditions: (1) Can be accomplished with technologies and methods that have been used in the past in similar circumstances, or studies or tests that have demonstrated in similar circumstances that such approaches are currently available and likely to achieve the intended results; (2) Provides a reasonable likelihood of achieving its intended purpose; and (3) Does not physically preclude achieving the project's primary intended legal use.

Water depth does not reach depths of 9' within 100' of the ordinary high water line along this property. The property is not able to accommodate a boat lift meeting the requirements of Table 16.65.080 because it does not have the minimum 9' water depth available within between 30' and 100' of the ordinary high water line. To construct a boat lift at the required water depth, the existing pier would need to be extended far beyond the maximum required length of 100', which would require a shoreline variance.

Staff Review: Applicant provided evidence satisfying criterion: ☒ *Yes* ☐ *No*

Approval Criteria (Continued)

2. No reasonable alternative exists due to the bathymetry and/or existing overwater structures on adjacent properties:

Bathymetry is the measurement of water depth at various places in a body of water (topography) and the information derived from such measurements.

Water depth does not reach 9' within 100' of the ordinary high water mark of this property. Bathymetry in this general vicinity is much shallower than typical of Lake Washington shorelines.

Staff Review: Applicant provided evidence satisfying criterion: ☒ *Yes* ☐ *No*

3. A minimum water depth of five feet is maintained.

A minimum water depth of five feet will be maintained for the boat lift.

Staff Review: Applicant provided evidence satisfying criterion: ☒ *Yes* ☐ *No*

I declare under penalty of perjury that that all applicable information furnished in support of this request for a waiver is true, correct and complete.

Printed Name: TED BURNS

Signature: [signature] **Date:** 11/21/2025

DECISION:

The request for a waiver from the minimum water depth requirement for a boat lift at 7887 Overlake Drive W is hereby:

☒ Approved
☐ Denied

Signature: [signature] **Date:** 1/2/26

Director of Development Services

complete this section.

City of MEDINA WASHINGTON
DEVELOPMENT SERVICES
501 EVERGREEN POINT ROAD MEDINA, WA 98039
PHONE: 425-233-6414/6400

Water Depth Waiver Request

North Lift

Instructions:

1. The Medina Shoreline Master Program requires overwater structures such as piers, floats, moorage covers and boatlifts to have a minimum water depth. (See Chapter 16.65 MMC for water depth standards.)
2. This form may be used to request a waiver from the minimum water depth standard. If requesting a water depth waiver for more than one structure, please complete a separate water depth waiver request for each.
3. Please complete this form and answer the criteria thoroughly. Attach supporting documents as necessary. Your answers must satisfy the criteria to receive approval of the waiver. Requests will be denied if they do not satisfy the criteria.

General Information

Property Owner Name: Bill Shihara	**Water depth waiver request is for (check one):**
Property Address: 7887 Overlake Drive, Medina	☐ Pier/ Float ☐ Covered Moorage ☒ Boatlift/ Jet Ski Lift ☐ Buoy/ Moorage Pile

Contact Information

Contact Person: Seaborn Companies	**Phone:** 206-236-1700
~~Dray Davick~~ TED BURNS	**Email:** permits@seaborncompanies.com
Mailing Address: 1080 W. Ewing Pl. Suite 300	**City:** Seattle **State:** WA **Zip:** 98119

Approval Criteria

Please answer the following and provide supporting documentation.

1. Compliance with the water depth is not *feasible* without the need for a shoreline variance:

"Feasible" means an action, such as a development project, mitigation, or preservation requirement, that meets all the following conditions: (1) Can be accomplished with technologies and methods that have been used in the past in similar circumstances, or studies or tests that have demonstrated in similar circumstances that such approaches are currently available and likely to achieve the intended results; (2) Provides a reasonable likelihood of achieving its intended purpose; and (3) Does not physically preclude achieving the project's primary intended legal use.

Water depth does not reach depths of 9' within 100' of the ordinary high water line along this property. The property is not able to accommodate a boat lift meeting the requirements of Table 16.65.080 because it does not have the minimum 9' water depth available within between 30' and 100' of the ordinary high water line. To construct a boat lift at the required water depth, the existing pier would need to be extended far beyond the maximum required length of 100', which would require a shoreline variance.

Staff Review: Applicant provided evidence satisfying criterion: ☒ *Yes* ☐ *No*

Approval Criteria (Continued)

2. No reasonable alternative exists due to the bathymetry and/or existing overwater structures on adjacent properties:

Bathymetry is the measurement of water depth at various places in a body of water (topography) and the information derived from such measurements.

Water depth does not reach 9' within 100' of the ordinary high water mark of this property. Bathymetry in this general vicinity is much shallower than typical of Lake Washington shorelines.

Staff Review: Applicant provided evidence satisfying criterion: ☒ *Yes* ☐ *No*

3. A minimum water depth of five feet is maintained.

A minimum water depth of five feet will be maintained for the boat lift.

Staff Review: Applicant provided evidence satisfying criterion: ☒ *Yes* ☐ *No*

I declare under penalty of perjury that that all applicable information furnished in support of this request for a waiver is true, correct and complete.

Printed Name: TED BURNS

Signature: _____ **Date:** 11/21/2025

DECISION:

The request for a waiver from the minimum water depth requirement for a boat lift at 7887 Overlake Drive W is hereby:

☒ Approved
☐ Denied

Signature: _____ **Date:** 1/2/26

Director of Development Services

complete this section.

City of MEDINA WASHINGTON
DEVELOPMENT SERVICES
501 EVERGREEN POINT ROAD MEDINA, WA 98039
PHONE: 425-233-6414/6400

Water Depth Waiver Request

South Lift

Instructions:

1. The Medina Shoreline Master Program requires overwater structures such as piers, floats, moorage covers and boatlifts to have a minimum water depth. (See Chapter 16.65 MMC for water depth standards.)
2. This form may be used to request a waiver from the minimum water depth standard. If requesting a water depth waiver for more than one structure, please complete a separate water depth waiver request for each.
3. Please complete this form and answer the criteria thoroughly. Attach supporting documents as necessary. Your answers must satisfy the criteria to receive approval of the waiver. Requests will be denied if they do not satisfy the criteria.

General Information

Property Owner Name: Bill Shihara

Property Address: 7887 Overlake Drive, Medina

Water depth waiver request is for (check one):

- ☐ Pier/ Float
- ☐ Covered Moorage
- ☒ Boatlift/ Jet Ski Lift
- ☐ Buoy/ Moorage Pile

Contact Information

Contact Person: Seaborn Companies

~~Dray Davick~~ TED BURNS

Mailing Address: 1080 W. Ewing Pl. Suite 300

Phone: 206-236-1700

Email: permits@seaborncompanies.com

City: Seattle **State:** WA **Zip:** 98119

Approval Criteria

Please answer the following and provide supporting documentation.

1. Compliance with the water depth is not *feasible* without the need for a shoreline variance:

"Feasible" means an action, such as a development project, mitigation, or preservation requirement, that meets all the following conditions: (1) Can be accomplished with technologies and methods that have been used in the past in similar circumstances, or studies or tests that have demonstrated in similar circumstances that such approaches are currently available and likely to achieve the intended results; (2) Provides a reasonable likelihood of achieving its intended purpose; and (3) Does not physically preclude achieving the project's primary intended legal use.

Water depth does not reach depths of 9' within 100' of the ordinary high water line along this property. The property is not able to accommodate a boat lift meeting the requirements of Table 16.65.080 because it does not have the minimum 9' water depth available within between 30' and 100' of the ordinary high water line. To construct a boat lift at the required water depth, the existing pier would need to be extended far beyond the maximum required length of 100', which would require a shoreline variance.

Staff Review: Applicant provided evidence satisfying criterion: ☒ *Yes* ☐ *No*

Approval Criteria (Continued)

2. No reasonable alternative exists due to the bathymetry and/or existing overwater structures on adjacent properties:

Bathymetry is the measurement of water depth at various places in a body of water (topography) and the information derived from such measurements.

Water depth does not reach 9' within 100' of the ordinary high water mark of this property. Bathymetry in this general vicinity is much shallower than typical of Lake Washington shorelines.

Staff Review: Applicant provided evidence satisfying criterion: ☒ *Yes* ☐ *No*

3. A minimum water depth of five feet is maintained.

A minimum water depth of five feet will be maintained for the boat lift.

Staff Review: Applicant provided evidence satisfying criterion: ☒ *Yes* ☐ *No*

I declare under penalty of perjury that that all applicable information furnished in support of this request for a waiver is true, correct and complete.

Printed Name: Ed Burns

Signature: [signature] **Date:** 11/21/2025

DECISION:

The request for a waiver from the minimum water depth requirement for a boat lift at 7887 Overlake Drive W is hereby:

☒ Approved
☐ Denied

Signature: [signature] **Date:** 1/2/26

Director of Development Services

complete this section.

PIER DETAILS EXISTING/PROPOSED - SECTION VIEW

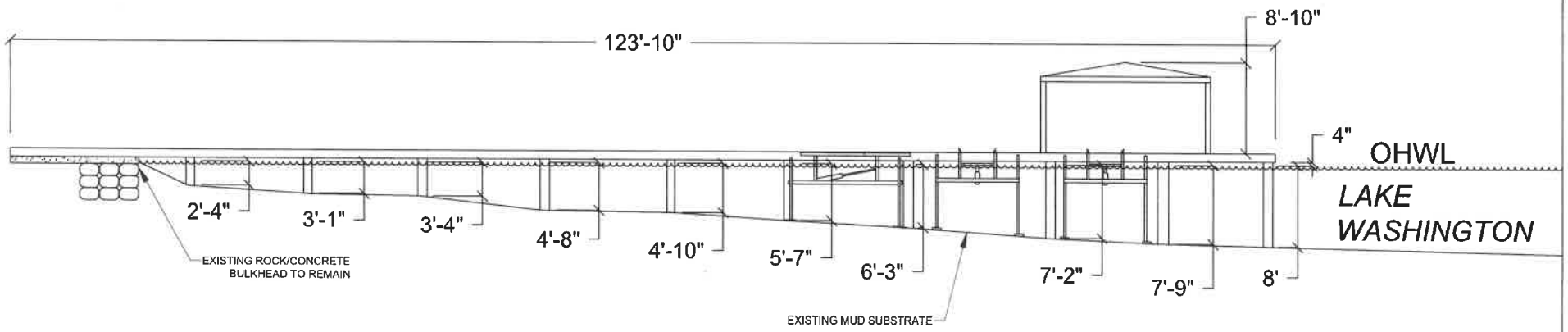

NTS

SECTION VIEW: A'-A'

BUILT BY SEABORN · ESTD 1947 ·

Seaborn Pile Driving
1080 W Ewing St
Seattle, WA 98119

Office: 206-236-1700 ext. 5
www.seabornpiledriving.com

Scope of Work: We propose to repair the existing dock, replace (1) existing boat lift, install (2) boat lifts, and repair the existing moorage cover.

County: King County
Location: Lake Washington

Applicant: Shihara Residence
7887 Overlake Dr
Medina, WA 98009

Last Updated: 12/29/2025 12:01 PM AndrewTon

Created: 11/01/23

Datum: CORPS OF ENGINEERS 1919
NE Quarter Of Section 36, Township 25, Range 04

Adjacent Owners:
BROTMAN SUSAN R
7917 OVERLAKE DR W 98039
BLUE WATER REALTY LLC
7777 OVERLAKE DR W 98039

SHEET 6.0

NWS-2023-XXX
PAGE 6 OF 9

Exhibit 13
P-24-024 & P-24-025
7887 Overlake Drive West

1936 Aerial

MMC 16.65.040(D) governs how to measure length of pier from OWHL. This appears to be the length, which is nonconforming to MMC 16.65.040 maximum of 100'. If the applicant provides proof of existing legal nonconformity, the applicant can continue to enjoy the nonconforming length, provided that replacement of the decking does **not include replacement of substructure** and new decking will allow at least 40% light transmission.

Sheets 11-13 indicate replacement of the substructure. Substructure replacement does not qualify for maintaining legal nonconforming right associated with deck replacement.

Where nonconforming rights are lost, improvements must conform with current code. MMC 16.66.090(5).

Remove substructure replacement from proposal to repair pier in a manner that maintains nonconformities. Provide proof of nonconforming right. Provide manufacturer's sheet of proposed grating indicating minimum 40% light transmission.

These comments apply to all nonconforming elements of the pier related to decking replacement, including:
-encroachment into 12' side yard setback.
-maximum width of walkway.
-piles closer than 18' from OHWL.

1977 aerial imagery sourced from Historic Aerials conveys dock and moorage cover positioned as exists today.

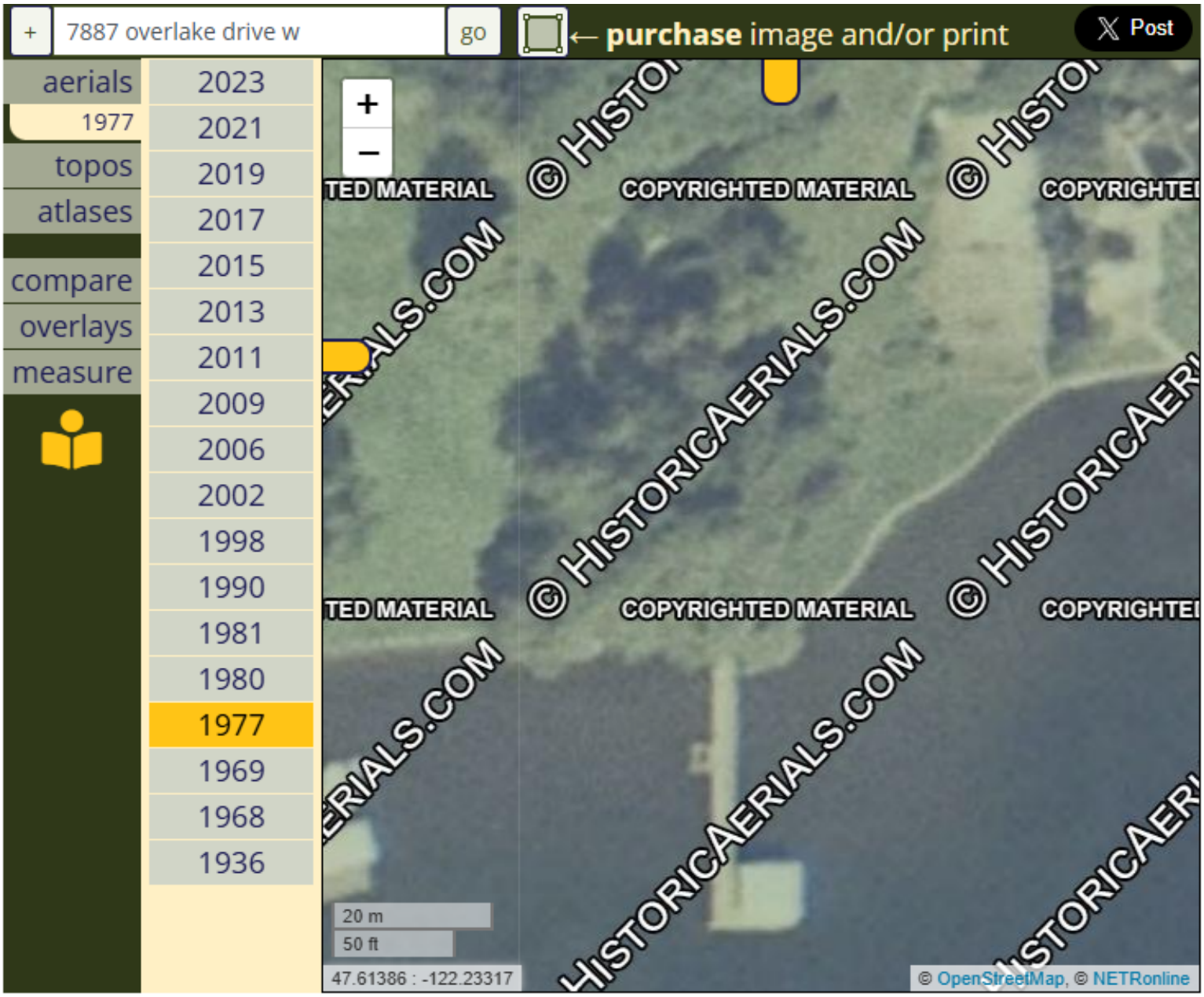

1990 aerial imagery sourced from Google Earth conveys dock and moorage cover positioned as exists today.

ATTACHMENT A

CODE REFERENCES: Medina

We are applying for the permit to be reviewed under the:

16.65.60 - Repair and maintenance of overwater structures.

20.65.120 - Boatlifts

Per MMC 16.65.030(C), the owner has the burden of proof to demonstrate that the existing dock was legally established prior to April 18, 2014 to make use of standards set forth in MMC 16.65.060. Provide this proof in next submittal.

Note that per MMC 16.65.030, for piers/docks established before April 18, 2024 proposing additions/modifications, the following sections of MMC all apply:
-MMC 16.65.040
-MMC 16.65.060
-MMC 16.66.090 (when existing in nonconforming state)

There was a public records request for any information related to the dock or dock permits, Request No. 25-171, and the City's records did not include any documentation regarding this dock outside of the current application. Based on aerial photographs, the dock has been in place in its current location since 1936, although at that time there was an additional finger pier. Aerial photographs from 2007 and 1936 are shown below.

2007 Aerial

2007 aerial imagery sourced from Department of Ecology Shoreline Photo Viewer conveys dock and moorage cover positioned as exists today.

Based on the City's application of its SMP in the recent past on a similar project, we do not believe that the City's SMP requires that a dock loses its nonconforming status if the substructure is updated to accommodate the new grating materials. In a similar dock repair and expansion at 3440 Evergreen Point Road (Project No. P-22-051) in 2023, the Hearing Examiner granted the SSDP upon staff recommendation to do so. The Examiner decision is attached to this response. The existing dock was nonconforming to setbacks, width, and length. Despite the stringers being replaced as per the plans (attached), neither the City, the Hearing Examiner, nor the neighbors who opposed portions of the dock repair, determined that the dock had lost its nonconforming status due to this repair. This makes sense, as the proposal in 3440 Evergreen Point Road required new structural support as required by the grating specifications. This is precisely what is being done in this project as well. Accordingly, the proposal does not "The City's SMP has not changed since this 2023 determination and the City should remain consistent with its previous interpretation of its Code.

Exhibit 14
P-24-024 & P-24-025
7887 Overlake Drive West

SURE·STEP™ PERFORMANCE DECKING | STANDARD SERIE

SPECIFICATIONS & MEASUREMENTS

BASE MATERIAL	100% virgin polypropylene
THICKNESS	1.0" For all sizes

*Changes in temperature may cause minor expansion/contraction

LIGHT AVAILABILITY

53% At 18" Height

82% At 60" Height

High UV Stabilizer Additives!

PRODUCT DIMENSIONS AND SPANS

35.375"
4.0 lbs

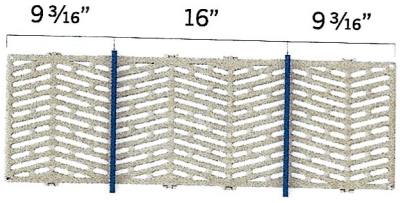

47.50"
5.5 lbs

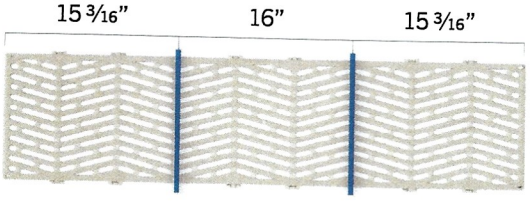

59.625"
7.0 lbs

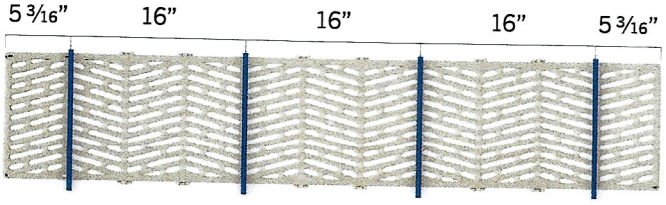

*Blue lines indicate **the span** of each size

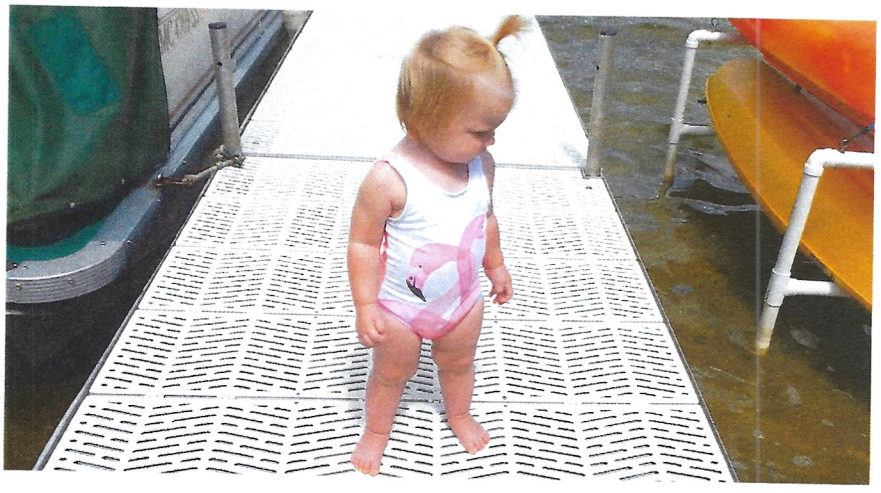

PERSPECTIVE PRODUCTS
P.O. Box 200 | Zeeland, Michigan 49464
616.895.6416 | 888.779.1600 | perspectiveproducts.com

PERSPECTIVE™ PRODUCTS DOCK & DECKING

DEPARTMENT OF THE ARMY
CORPS OF ENGINEERS, SEATTLE DISTRICT
4735 EAST MARGINAL WAY SOUTH, BLDG 1202
SEATTLE, WA 98134-2388

Exhibit 15
P-24-024 & P-24-025
7887 Overlake Drive West

Regulatory Branch April 22, 2024

Ms. Kathy Young
7887 Overlake Drive W LLC
7887 Overlake Drive W
Medina, Washington 98039

Reference: NWS-2024-228
Young, Kathy- (pier, boatlifts, moorage cover)

Dear Ms. Young:

We have reviewed your application to repair the existing 1,316-square-foot pier with cap beams and stringers and 43% open space solid decking, replace the existing 100-square-foot boat lift, install two new 100-square-foot free-standing boat lifts, and replace the existing 392-square-foot moorage cover in Lake Washington at 7887 Overlake Drive West in Medina, King County, Washington. replace the existing with fully grated decking (43% open space). Based on the information you provided to us, this "Letter of Permission" (LOP) permit authorizes your proposal as depicted on the enclosed drawings dated December 27, 2023, which are made part of this permit. In order for this LOP authorization to be valid, you must ensure that the work is performed in accordance with the enclosed *Letter of Permission General Conditions* and the following special conditions:

a. In order to meet the requirements of the Endangered Species Act (ESA) and Magnuson-Stevens Fishery Conservation and Management Act (MSA) *Restoration and Permitting* (RAP) programmatic consultation (National Marine Fisheries Service (NMFS) Reference Number WCRO-2016-00008), you must implement and abide by the ESA requirements and/or agreements set forth in the Biological Opinion (BO) dated February 17, 2017, the NMFS' *RAP Implementation Guide* dated July 25, 2019, and the RAP form for your individual project (NMFS Reference Number WCRO-2016-00008-7018).The BO is available on the U.S. Army Corps of Engineers (Corps) website (Permit Guidebook, Endangered Species, Programmatic Consultations, Activities on Lakes Washington and Sammamish). Upon completion of the permitted work, you must submit an As-Built Report (see RAP Implementation Guide, Appendix E) to the Corps and the NMFS (rap-reports.wcr@noaa.gov). You must visually monitor the work area

during construction when the substrate is disturbed and ensure that observable turbidity increases do not extend beyond a 150-foot radius around the work area. If turbidity increases occur beyond this area, you must include it in your As-Built Report. You must comply with any required RAP planting plan (see RAP Implementation Guide, Appendices C and D) requirements and submit annual monitoring reports for five years to the Corps and the NMFS (rap-reports.wcr@noaa.gov). All reports must prominently display the reference number NWS-2024-228. Failure to comply with these requirements constitutes non-compliance with the ESA and your Corps permit. The NMFS is the appropriate authority to determine compliance with the terms and conditions of its BO and with the ESA. If you cannot comply with the terms and conditions of this programmatic consultation, you must, prior to commencing construction, contact the Corps, Seattle District, Regulatory Branch for an individual consultation in accordance with the requirements of the ESA and/or the MSA.

b. To be in compliance with Special Condition “a”, you must request an invoice from the King County Mitigation Reserves Program (ATTN: Ms. Megan Webb, megan.webb@kingcounty.gov; In-lieu Fee Mitigation and Transfer of Development Rights, King County Water and Land Resources Division, Department of Natural Resources and Parks, 201 South Jackson Street, Room 600, Seattle, Washington, 98104-3855) and provide the U.S. Army Corps of Engineers a receipt that you have paid the required conservation fees of $16,659 within 60 days from the date of permit authorization. This information must prominently display the reference number NWS-2024-228.

c. In order to meet the requirements of the Endangered Species Act (ESA) programmatic letter of concurrence for selected activities in the Lake Washington/Lake Sammamish Basins (U.S. Fish and Wildlife Service (USFWS) Reference Number 13410-2009-I-0386-R001) you must comply with the relevant conservation measures in the document titled, Conservation Measures for Activities Covered under the Lake Washington Programmatic Consultation Letter of Concurrence available on the U.S. Army Corps of Engineers (Corps) website (Permit Guidebook, Endangered Species, Programmatic Consultations, Activities on Lakes Washington and Sammamish). If you cannot comply with these conservation measures, you must, prior to commencing construction, contact the Corps, Seattle District, Regulatory Branch for an individual consultation in accordance with the requirements of the ESA. The USFWS is the appropriate authority to determine compliance with the ESA.

d. In order to meet the requirements of the Endangered Species Act you may conduct the authorized activities from July 16 through April 30 in any year this permit is

valid. You shall not conduct work authorized by this permit from May 1 through July 15 in any year this permit is valid.

e. You must implement and abide by the shoreline planting plan as detailed on page 8 of the project drawings; in accordance with the mitigation plan dated December 27, 2023.

f. The plants shall be installed before or concurrent with the work authorized by this permit. A report, as-built drawing, and photographs demonstrating the trees/plants have been installed or a report on the status of project construction must be submitted to the U.S. Army Corps of Engineers, Seattle District, Regulatory Branch, within 12 months from the date of project construction. You can meet this reporting requirement by completing and submitting the enclosed Report for Mitigation Work Completion form.

g. You must maintain and monitor the survival of installed shoreline plantings for five years after the U.S. Army Corps of Engineers accepts the as-built report. Installed plants shall achieve 100% survival during monitoring Years 1 and 2. Installed trees/plants shall achieve at least 80% survival during monitoring Years 3, 4 and 5. Percent survival is based on the total number of plants installed in accordance with the approved shoreline planting plan. Individual plants that die must be replaced with native riparian species in order to meet the survival performance standards.

h. You must submit annual monitoring reports for five years (Monitoring Years 1-5). Each annual monitoring report shall include written and photographic documentation on plant mortality and replanting efforts and must document whether the performance standards are being met. Photos must be taken from established points used for each monitoring year. In addition to photos at designated points, photo documentation must include a panoramic view of the entire planting area. Submitted photos must be formatted on standard 8 ½” x 11” paper, dated with the date the photo was taken, and clearly labeled with the direction from which the photo was taken. The photo location points must be identified on an appropriate drawing. Annual shoreline planting monitoring reports must be submitted to the U.S. Army Corps of Engineers, Seattle District, Regulatory Branch, by November 31 of each monitoring year. You can meet this reporting requirement by completing and submitting the enclosed Mitigation Planting Monitoring Report form.

i. To ensure the long-term protection of the mitigation site, you shall record on the mitigation site property deed a copy of this Department of the Army permit and a description of the mitigation area identified in the final mitigation plan. These documents

shall be recorded with the Registrar of Deeds or other appropriate official charged with maintaining records on real property. Proof of this recorded documentation must be submitted to the U.S. Army Corps of Engineers, Seattle District, Regulatory Branch within 60 days from the date of construction.

We have reviewed your project pursuant to the requirements of the Endangered Species Act and the Magnuson-Stevens Fishery Conservation and Management Act in regards to Essential Fish Habitat. The U.S. Army Corps of Engineers has determined that this project will comply with the requirements of the above laws provided you comply with special condition “a” listed above.

Please be reminded that Special Condition “a” of your permit requires that you implement and abide by the Endangered Species Act (ESA) requirements set forth in the programmatic Biological Opinion (BO) for this project. In particular, within 60 days you must provide an As-Built Report, annual monitoring reports, and a receipt for the conservation fees, as described in the BO. Failure to comply with the commitments made in the BO constitutes non-compliance with the ESA and your Corps permit.

The Washington State Department of Ecology determined your project does not trigger the need for a Water Quality Certification or a Coastal Zone Management consistency determination.

You have not requested a jurisdictional determination for this proposed project. If you believe the U.S. Army Corps of Engineers does not have jurisdiction over all or portions of your project you may request a preliminary or approved jurisdictional determination (JD). If one is requested, please be aware that we may require the submittal of additional information to complete the JD and work authorized in this letter may not occur until the JD has been completed.

Any change in the plans for this work will require that you submit revised drawings to this office and receive our written approval of those changes prior to conducting the work. If you object to any terms or conditions of this LOP or the JD, you may request an administrative appeal under our regulations (33 CFR Part 331) as described in the enclosed *Notification of Administrative Appeal Options and Process and Request for Appeal* form.

Your authorization to conduct the proposed work under this permit expires 3 years from the date of this letter. Within 30 days of completing the authorized work, you must fill out and return the enclosed *Certificate of Compliance with Department of the Army Permit*. Your signature on this form is our assurance you have conducted the work and any required mitigation in accordance with the terms and conditions of this LOP,

including all special conditions. All compliance reports should be submitted to the U.S. Army Corps of Engineers, Seattle District, Regulatory Branch at nws.compliance@usace.army.mil. Please remember that failure to comply with the terms and conditions of this LOP, including any special conditions, will invalidate your authorization and could result in a violation of Federal law.

Thank you for your cooperation during the permitting process. We are interested in your experience with our Regulatory Program and encourage you to complete a customer service survey form. This form and information about our program is available on our website at: www.nws.usace.army.mil (select “Regulatory Branch, Permit Information”).

While this project will not require further authorization from us, please note that it must comply with all local, State, and other Federal requirements that may apply. A copy of this letter and permit drawings will be furnished to Zion Napier at permits@seabornpiledriving.com. If you have any questions about this letter or our regulatory program, please contact Ms. Colleen Anderson at colleen.c.anderson@usace.army.mil or by phone at (206) 764-3262.

BY AUTHORITY OF THE SECRETARY OF THE ARMY:

for Kathryn P. Sanborn, PhD, PE, PMP
Colonel, Corps of Engineers
District Commander

Enclosures

cc:
U.S. Fish and Wildlife Service (wfwoctap@fws.gov)
Washington Department of Ecology (ecyrefedpermits@ecy.wa.gov)
Washington Department of Natural Resources (lalena.amiotte@dnr.wa.gov)
National Marine Fisheries Service (consultationupdates.wcr@noaa.gov)
King County Mitigation Reserves Program (megan.webb@kingcounty.gov)