TOWN OF JEROME

POST OFFICE BOX 335, JEROME, ARIZONA 86331
(928) 634-7943
www.jerome.az.gov

AGENDA

REGULAR COUNCIL MEETING OF THE TOWN OF JEROME
COUNCIL CHAMBERS, JEROME TOWN HALL
600 CLARK STREET, JEROME, ARIZONA

TUESDAY, NOVEMBER 10, 2026, AT 7:00 PM

Due to the length of this meeting, Council may recess and reconvene at the time and date announced.

Pursuant to A.R.S. 38-431.02 notice is hereby given to the members of the Council and to the General Public that the Jerome Town Council plans to hold the above meeting. Persons with a disability may request an accommodation such as a sign language interpreter by contacting Kristen Muenz, Deputy Clerk, at 928-634-7943. Requests should be made early enough to allow time to arrange the accommodation. For TYY access, call the Arizona Relay Service at 800-367-8939 and ask for the Town of Jerome at 928-634-7943.

Notice is hereby given that pursuant to A.R.S. 1-602.A.9, subject to certain specified statutory exceptions, parents have a right to consent before the State or any of its political subdivisions make a video or audio recording of a minor child. Meetings of the Town Council are audio and/or video recorded, and, as a result, proceedings in which children are present may be subject to such recording. Parents in order to exercise their rights may either file written consent with the Town Clerk to such recording, or take personal action to ensure that their child or children are not present when a recording may be made. If a child is present at the time a recording is made, the Town will assume that the rights afforded parents pursuant to A.R.S. 1-602.A.9 have been waived.

We acknowledge we are on the traditional lands of the Yavapai and Apache People and we, the Town of Jerome, pay respect to the elders both past and present.

1. CALL TO ORDER/ROLL CALL
Mayor/Chairperson to call meeting to order
Town Clerk to call and record the roll.

2. COUNCIL REORGANIZATION SESSION

A. Acknowledgement of Outgoing Councilmembers and List of Accomplishments

Mayor Barber will acknowledge the contributions of the outgoing councilmembers and summarize accomplishments of the past two years.

B. Oath of Office

Councilmembers-elect will Take the Oath of Office.

C. Consider the Selection of a Mayor and Vice-Mayor

Council will select the Mayor and Vice-Mayor by Nomination and Vote.

D. Consider Appointment of a Councilmember Representative to the Various Northern Arizona Council of Governments (NACOG) Committees

Council will appoint a member to represent the Town on NACOG committees.

3. FINANCIAL REPORTS
Discussion/Possible Action

A. Financial Report and Detail Invoice Register Report for October, 2026

Council will consider and may approve the financial reports for month ending October, 2026.

4. STAFF AND COUNCIL REPORTS
Discussion/Possible Action

A. Reports by the Town Manager / Clerk, Deputy Clerk, Utilities Clerk, Accounting Clerk, Public Works Director, Building Inspector, Library Director, Municipal Magistrate, Police Chief, Fire Chief and Council Members, Which in the Case of Council Member's Reports will be Limited to a Summary of Current Events and will Involve no Action

Council will consider and may approve the staff reports.

5. ZONING ADMINISTRATOR'S REPORT/PLANNING & ZONING AND DESIGN REVIEW BOARD MINUTES
Information/Council Review

A. Report Provided by the Zoning Administrator. Minutes are Provided for Information Only and do Not Require any Action

6. APPROVAL OF MINUTES
Discussion/Possible Action

A. Consider Approval of the October 13, 2026, Regular Council Meeting Minutes

Council may approve the October 13, 2026, Regular Council Meeting minutes.

7. PETITIONS FROM THE PUBLIC
Pursuant to A.R.S. § 38-431.01(H), public comment is permitted on matters not listed on the agenda, but the subject matter must be within the jurisdiction of the Council. All comments are subject to reasonable time, place and manner restrictions. All petitioners must fill out a request form with their name and subject matter. When recognized by the chair, please step to the podium, state your name and please observe the three (3) minute time limit. No petitioners will be recognized without a request. The Council's response to public comments is limited to asking staff to review a matter commented upon, asking that a matter be put on a future agenda, or responding to criticism.

A. Pre-registered Petition from Jacob Giles

8. ORDINANCES AND RESOLUTIONS
Discussion/Possible Action

A. Consider First Reading of Ordinance No. 497; An Ordinance of the Town Council of the Town of Jerome Amending the Zoning Ordinance of the Town of Jerome, to Update, Modernize, and Substantially Revise the Provisions Thereof, Including Subdivision Code Regulations and Landscape and Streetscape Design Elements; and Providing for Penalties; and Providing for Severability

Council will consider and may approve the first reading of Ordinance No. 497.

9. UNFINISHED BUSINESS
Discussion/Possible Action

A. Discussion and Possible Action / Staff Direction Regarding the Middle Park Donation from the Richard J. Martin Trust; To Be Expended by November 18,

2027 - ($0.00) Expended To-Date; and Discussion Regarding the Proposal from SEC for Middle Park ADA Accessibility Features

Council will discuss, and may provide staff direction.

B. Consider Proposal from Southwestern Environmental Consultants, Inc., for the Development Design of ADA Accessible Features at the Middle Park

Council will consider and may approve the proposal.

10. NEW BUSINESS

Discussion/Possible Action

A. Consideration of Opting in to the Most Recent Opioid Settlements, Referred to as, the "Albertsons Settlement" and Authorizing the Mayor and Town Manager / Clerk to Execute All Documents Related to These Settlements

The Council will consider and may approve the opting in and authorization of the Mayor and Town Manager to execute all documents.

B. Consider Removing from the Table and Further Discussion / Possible Staff Direction Regarding Park Closure Times, Dogs and Alcohol in the Parks and on the Steps, and Other Park and Noise Ordinance Policy Considerations

Council will remove the item from the table, and may discuss and consider alternatives, along with providing staff direction.

C. Consider Removing from the Table and Further Discussion Regarding the Installation of Security Cameras on Public Safety Facilities

Council will remove the item from the table, and may discuss staff's proposal regarding the installation of security cameras and Councilmember Sheffield's proposed ordinance language.

D. Consider Removing from the Table; and then, Consideration of Proposed Fire Department Bylaw Updates

Council will consider removing from the table, and may approve the staff proposed updates to the Fire Department bylaws.

E. Consider Proposal Agreement from Willdan for a Complete Water and Wastewater Rate Analysis and Authorizing the Town Manager to Take the Necessary Steps to Execute the Agreement

Council will consider and may approve the agreement and authorize the Town Manager to execute said agreement.

F. Update on Procurement Officer's Response to the Formal Bid Protest and Supplement to the Formal Bid Protest from Technology Construction, Inc.

Council will review the Procurement Officer's response.

G. Consider Approval of a Water Infrastructure Easement Agreement between the Town and Freeport Minerals Corporation, and Authorizing the Town Manager or Mayor to Take the Necessary Steps to Execute the Agreement, Pending Town Attorney Approval of Form

Council will consider and may approve the Water Infrastructure Easement Agreement.

H. Consideration of a Special Event Permit Application from the Jerome Historical Society for A Celebration of Life (Steve Hopkins)

Council will consider and may approve the special event application.

I. Consideration of a Construction Contract and Bonds Between the Town of Jerome and Fann Environmental, LLC, for Wastewater Treatment Plant Improvements, and Authorizing the Mayor and Manager / Clerk to Take the Necessary Steps to Execute the Contract on Behalf of the Town of Jerome as Approved by the Town Attorney

Council will consider and may approve the contract and bonds and authorize the Mayor and Manager / Clerk to Execute the Contract.

J. Consider Change Order #1 to the Construction Contract for the Jerome Wastewater Treatment Plant Improvements Resulting in an Increase to the Contract in the Amount of, $449,114.63

Council will consider and may approve Change Order #1.

K. Consider Selection of a New Enterprise Resource Planning (ERP) Financial Software Suite Vendor and Entering into an Agreement with the Selected Vendor for a New ERP System

Council will consider and may approve the selection of a New ERP vendor and authorize the Mayor or Town Manager to execute the agreement on behalf of the Town following legal review.

11. TO AND FROM THE COUNCIL

Council may direct staff regarding items to be placed on a future agenda.

12. ADJOURNMENT

The Town Council may recess the public meeting and convene in Executive Session for the purpose of discussion or consultation for legal advice with the Town Attorney, who may participate telephonically, regarding any item listed on this agenda pursuant to A.R.S. § 38-431.03 (A)(3). The Chair reserves the right, with the consent of Council, to take items on the agenda out of order.

CERTIFICATION OF POSTING OF NOTICE

The undersigned hereby certifies that this notice and agenda was posted at the following locations on or before 7 p.m. on _____ in accordance with the statement filed by the Jerome Town Council with the Jerome Town Clerk: (1) 970 Gulch Road, side of Gulch Fire Station, exterior posting case; (2) 600 Clark Street, Jerome Town Hall, exterior posting case; (3) 120 Main Street, Jerome Post office, interior posting case.

_____

Kristen Muenz, Deputy Town Clerk

File Attachments for Item:

A. Acknowledgement of Outgoing Councilmembers and List of Accomplishments

Mayor Barber will acknowledge the contributions of the outgoing councilmembers and summarize accomplishments of the past two years.

2025 – 2026 Town of Jerome List of Accomplishments

- Secured an award for grant funding with no local match of over $3M for Deception Water Line; Mescal Canyon Siphon Line; Verde Central Siphon Line; and School Street Regulator improvements;
- Completed the fully grant funded design and engineering phase for Verde Avenue;
- Received a RPPL Grant in the amount of $3.4M for the construction of Verde Avenue and Utility Improvements
- Received a grant award of $40,000 for a new Fire Command Vehicle:
- Received grant funding for a landscape design manual and zoning code update / re-write;
- Completed a landscape design manual;
- Completed a comprehensive update and rewrite of our zoning and subdivision code;
- Received a $200,000 grant award for total replacement of the Town's water meters;
- Installed all new updated and upgraded water meters throughout Town;
- Executed an agreement with the U.S. Forest Service for a term of 30-years for water transmission line access;
- Completed a 5-year Capital Improvement Plan;
- Completed a commercial parking inventory;
- Issued a RFP and executed an agreement for legal services with Gust Rosenfeld;
- Made a promotion to the position of Deputy Fire Chief;
- Recruited for and hired a Fire Chief;
- Hired a Deputy Police Chief;
- Hired a municipal Court Administrator / Clerk;
- Completed the requirements for a certified election official;
- Completed Gulch Drainage improvements design and engineering work and secured funding for the construction of the improvements;
- Completed the Gulch Drainage Improvements;
- Completed the Main / Hull Drainage improvements;
- Completed pavement improvements for the lower portion of County Road to State Highway 89A;
- Closed on a multi-unit home for employee workforce housing;
- Updated and enhanced the Town's Special Event Policy;
- Enhanced the Town's shuttle service and completed a policy for said shuttle services in Town;
- Started a pilot program for a Police Department Auxiliary unit;
- Sent multiple crews out for wildland fire assistance;
- Updated the Fire Department bylaws to fall under contemporary best practices;
- Completed a comprehensive re-write of the Town's Employee Handbook;
- Completed the Upper Park retaining wall utilizing funding from selling off a small portion of unused property;
- Upgraded our parking kiosks;
- Purchased a demo / lightly used sanitation truck, through a negotiated highly favorable interest rate saving the Town over $150,000;
- Received a grant in the amount of $165,000 for the redesign of Center Avenue;
- Achieved 100% of the Town of Jerome staff positions filled;
- Received a $1M EPA Brownfield grant;
- Received a $25,000 Utility and Infrastructure Mapping Grant through GADA
- Obtained over $7M in additional USDA funding for the WWTP upgrade and navigated complex easementd to secure the necessary land for USDA approval to proceed with the project

File Attachments for Item:

A. Financial Report and Detail Invoice Register Report for October, 2026

Council will consider and may approve the financial reports for month ending October, 2026.

TOWN OF JEROME
COMBINED CASH INVESTMENT
OCTOBER 31, 2026

COMBINED CASH ACCOUNTS

99-00-1003	LGIP	2,042.21
99-00-1011	NBA CHECKING	86,075.31
99-00-1013	OAZ CTL BUSINESS SAVINGS	5.00
99-00-1019	ONE AZ CREDIT UNION CHECKING	276,521.51
99-00-1020	OAZ GENERAL SAVINGS	297,927.87
99-00-1050	XPRESS DEPOSIT ACCOUNT	25,758.36
	TOTAL COMBINED CASH	688,330.26
99-00-1800	CASH CLEARING - UTILITY MGMT	(650.83)
99-00-1810	CASH CLEARING - BUSINESS LICEN	50.00
99-00-1000	CASH ALLOCATED TO OTHER FUNDS	(687,729.43)
	TOTAL UNALLOCATED CASH	.00

CASH ALLOCATION RECONCILIATION

10	ALLOCATION TO GENERAL FUND	663,801.98
20	ALLOCATION TO UTILITY FUND	(7,546.82)
30	ALLOCATION TO HURF FUND	(684,893.09)
35	ALLOCATION TO PARKING FUND	306,036.42
40	ALLOCATION TO FIRE DEPT PENSION & RETIREMENT	15,301.40
50	ALLOCATION TO OPERATING GRANTS REVENUE	(140,404.14)
60	ALLOCATION TO CAPITAL GRANTS FUND	824,680.31
70	ALLOCATION TO GENERAL FUND CONTINGENCIES FND	(316,932.97)
80	ALLOCATION TO UTILITIES CONTINGENCIES FUND	75,480.48
90	ALLOCATION TO CAPITAL FUND	(47,794.14)
	TOTAL ALLOCATIONS TO OTHER FUNDS	687,729.43
	ALLOCATION FROM COMBINED CASH FUND - 99-00-1000	(687,729.43)
	ZERO PROOF IF ALLOCATIONS BALANCE	.00

TOWN OF JEROME
BALANCE SHEET
OCTOBER 31, 2026

GENERAL FUND

	ASSETS			
10-00-1000	CASH - COMBINED FUND		663,801.98	
10-00-1005	PETTY CASH - GENERAL GOV		275.00	
10-00-1007	COURT - CHECKING & BOND ACCT		82,043.89	
10-00-1008	COURT - JCEF ACCT		14,613.13	
10-00-1009	COURT - FTG ACCT		10,981.71	
10-00-1014	PETTY CASH - FIRE DEPT		150.00	
10-00-1015	PETTY CASH - LIBRARY		150.00	
10-00-1120	GF ACCOUNTS RECEIVABLE		1,230.53	
10-00-1175	ACCOUNTS RECEIVABLE LEASES		118,330.00	
	TOTAL ASSETS			891,576.24
	LIABILITIES AND EQUITY			
	LIABILITIES			
10-00-2401	FEDERAL WH & FICA		(.03)	
10-00-2403	UNEMPLOYMENT TAXES		91.83	
10-00-2406	HEALTH INSURANCE		(3,989.27)	
10-00-2409	PSPRS		97.52	
10-00-2410	WAGES PAYABLE		.01	
10-00-2412	HDHP SAVINGS		236.30	
10-00-2413	WORKMAN'S COMP PR LIABILITY		4,175.91	
10-00-2600	CUSTOMER DEPOSITS		8,299.18	
10-00-2940	COURT LIABILITIES		5,741.47	
10-00-2950	FD PER CALL PAYABLE		18,780.00	
10-00-2975	DEFERRED INFLOW LEASES		118,330.00	
	TOTAL LIABILITIES			151,762.92
	FUND EQUITY			
10-00-3002	UNRESTRICTED FUND BALANCE		894,736.09	
	REVENUE OVER EXPENDITURES - YTD	(154,922.77)		
	BALANCE - CURRENT DATE		(154,922.77)	
	TOTAL FUND EQUITY			739,813.32
	TOTAL LIABILITIES AND EQUITY			891,576.24

TOWN OF JEROME
REVENUES WITH COMPARISON TO BUDGET
FOR THE 4 MONTHS ENDING OCTOBER 31, 2026

GENERAL FUND

		PERIOD ACTUAL	YTD ACTUAL	BUDGET	UNEARNED	PCNT
	TAX REVENUE					
10-30-4001	PROPERTY TAXES	3,226.74	3,299.11	47,500.00	44,200.89	7.0
10-30-4005	CITY SALES TAXES	60,704.15	195,469.84	1,480,000.00	1,284,530.16	13.2
10-30-4010	STATE SALES TAXES	5,760.66	21,180.23	70,000.00	48,819.77	30.3
10-30-4030	VEHICLE LICENSE TAX	3,335.37	11,563.87	40,000.00	28,436.13	28.9
10-30-4055	FRANCHISE FEES	532.80	532.80	17,800.00	17,267.20	3.0
	TOTAL TAX REVENUE	73,559.72	232,045.85	1,655,300.00	1,423,254.15	14.0
	LICENSES, PERMITS&OTHER FEES					
10-31-4040	BUILDING PERMITS	316.25	915.00	10,000.00	9,085.00	9.2
10-31-4041	PLANNING & ZONING FEES	150.00	150.00	3,000.00	2,850.00	5.0
10-31-4045	BUSINESS LICENSES	510.00	2,365.00	5,500.00	3,135.00	43.0
10-31-4071	FEES-SHORT TERM RENTAL LICENSE	.00	300.00	300.00	.00	100.0
	TOTAL LICENSES, PERMITS&OTHER FEES	976.25	3,730.00	18,800.00	15,070.00	19.8
	INTERGOVERNMENTAL REVENUE					
10-32-4015	URBAN REVENUE SHARE	26,228.27	104,913.08	315,750.00	210,836.92	33.2
	TOTAL INTERGOVERNMENTAL REVENUE	26,228.27	104,913.08	315,750.00	210,836.92	33.2
	LIBRARY REVENUE					
10-33-4020	YAVAPAI COUNTY FOR LIBRARY	.00	.00	18,750.00	18,750.00	.0
10-33-4070	RENTS-LIBRARY	862.00	3,448.00	10,750.00	7,302.00	32.1
10-33-4200	LIBRARY CONTRIBUTIONS	.00	.00	2,500.00	2,500.00	.0
	TOTAL LIBRARY REVENUE	862.00	3,448.00	32,000.00	28,552.00	10.8
	POLICE DEPT REVENUE					
10-34-4061	PD PARKING CITATION REVENUE	5,204.00	19,756.50	48,000.00	28,243.50	41.2
10-34-4062	PD REVENUE FROM PARKING FUND	12,916.67	51,666.68	155,000.00	103,333.32	33.3
10-34-4063	POLICE SMART & SAFE AZ FUND	.00	.00	11,000.00	11,000.00	.0
10-34-4064	POLICE OFFICER SAFETY EQUIP RE	226.94	735.73	2,000.00	1,264.27	36.8
10-34-4065	POLICE SERVICES	150.00	1,316.00	2,500.00	1,184.00	52.6
	TOTAL POLICE DEPT REVENUE	18,497.61	73,474.91	218,500.00	145,025.09	33.6

TOWN OF JEROME
REVENUES WITH COMPARISON TO BUDGET
FOR THE 4 MONTHS ENDING OCTOBER 31, 2026

GENERAL FUND

		PERIOD ACTUAL	YTD ACTUAL	BUDGET	UNEARNED	PCNT
	COURT REVENUE					
10-35-4035	FINES AND FORFEITURES	6,153.95	20,192.70	55,000.00	34,807.30	36.7
10-35-4037	COURT SECURITY FUND REVENUE	1,010.00	3,850.00	9,500.00	5,650.00	40.5
	TOTAL COURT REVENUE	7,163.95	24,042.70	64,500.00	40,457.30	37.3
	RENTAL REVENUE					
10-36-4070	RENTS-TOWN PROPERTIES	8,146.04	33,177.50	90,000.00	56,822.50	36.9
10-36-4080	UTILITY REIMBURSEMENTS	317.16	1,684.63	5,000.00	3,315.37	33.7
	TOTAL RENTAL REVENUE	8,463.20	34,862.13	95,000.00	60,137.87	36.7
	FIRE DEPT REVENUE					
10-37-4053	FIRE DEPT SERVICES REV	.00	3,170.00	9,000.00	5,830.00	35.2
10-37-4090	WILDLAND FIRE FEES	.00	8,624.74	77,000.00	68,375.26	11.2
10-37-4091	WILDLANDS WAGE REIMBURSEMENT	.00	9,484.02	63,000.00	53,515.98	15.1
	TOTAL FIRE DEPT REVENUE	.00	21,278.76	149,000.00	127,721.24	14.3
	GENERAL FUND REVENUE					
10-38-4000	FUND BALANCE RESERVES	3,333.33	13,333.32	40,000.00	26,666.68	33.3
10-38-4300	INTEREST	354.91	2,224.05	12,000.00	9,775.95	18.5
10-38-4400	SALE OF ASSETS	114.00	2,046.00	15,000.00	12,954.00	13.6
10-38-4500	MISCELLANEOUS REVENUES	1,024.83	109,913.55	14,000.00	(95,913.55)	785.1
10-38-4510	INS DIVIDENDS,CLAIMS,REIMBURSM	.00	.00	10,000.00	10,000.00	.0
	TOTAL GENERAL FUND REVENUE	4,827.07	127,516.92	91,000.00	(36,516.92)	140.1
	ADMINISTRATIVE CHARGES					
10-39-4600	ADMINISTRATIVE CHARGES	17,487.50	69,950.00	209,850.00	139,900.00	33.3
	TOTAL ADMINISTRATIVE CHARGES	17,487.50	69,950.00	209,850.00	139,900.00	33.3
	TOTAL FUND REVENUE	158,065.57	695,262.35	2,849,700.00	2,154,437.65	24.4

TOWN OF JEROME
EXPENDITURES WITH COMPARISON TO BUDGET
FOR THE 4 MONTHS ENDING OCTOBER 31, 2026

GENERAL FUND

		PERIOD ACTUAL	YTD ACTUAL	BUDGET	UNEXPENDED	PCNT
	GENERAL GOVT EXPENSES					
10-41-5001	SALARIES AND WAGES	22,950.82	91,850.76	308,533.00	216,682.24	29.8
10-41-5006	LONGEVITY BONUS	.00	686.00	1,207.00	521.00	56.8
10-41-5010	FICA MATCH	1,725.54	6,958.25	23,695.00	16,736.75	29.4
10-41-5011	RETIREMENT MATCH	2,642.98	10,633.18	32,813.00	22,179.82	32.4
10-41-5012	HEALTH/LIFE INSURANCE	6,309.54	25,238.16	72,250.00	47,011.84	34.9
10-41-5013	WORKERS COMPENSATION	214.95	453.34	1,650.00	1,196.66	27.5
10-41-5014	UNEMPLOYMENT INSURANCE	.00	.00	280.00	280.00	.0
10-41-6101	ACCOUNTING AND AUDITING	.00	.00	26,000.00	26,000.00	.0
10-41-6105	ADVERTISING, PRINTING, & PUBLI	.00	365.75	4,000.00	3,634.25	9.1
10-41-6110	CONTRACT SERVICES	.00	2,081.22	30,000.00	27,918.78	6.9
10-41-6115	CONVENTIONS AND SEMINARS	1,000.96	3,894.48	3,250.00	(644.48)	119.8
10-41-6116	TRAINING & EDUCATION	857.39	3,101.34	2,750.00	(351.34)	112.8
10-41-6125	DUES, SUBS & MEMBERSHIPS	480.23	4,445.48	8,500.00	4,054.52	52.3
10-41-6130	ELECTION EXPENSES	.00	1,056.78	1,000.00	(56.78)	105.7
10-41-6145	FUEL	211.00	287.30	800.00	512.70	35.9
10-41-6155	INSURANCE	.00	13,558.07	37,000.00	23,441.93	36.6
10-41-6170	LEGAL EXP - GEN GOV	.00	4,875.00	15,500.00	10,625.00	31.5
10-41-6185	MISCELLANEOUS	555.10	641.18	5,000.00	4,358.82	12.8
10-41-6186	BANK FEES - GEN ADMIN	159.73	663.22	2,000.00	1,336.78	33.2
10-41-6188	BANK FEES / MERCH SVCS	292.74	896.13	3,350.00	2,453.87	26.8
10-41-6190	OFFICE SUPPLIES	1,180.07	2,848.49	9,250.00	6,401.51	30.8
10-41-6191	COPIER & EQUIP LEASE EXPENSE	.00	1,361.18	5,750.00	4,388.82	23.7
10-41-6192	SOFTWARE SUPPORT EXP - GG	1,064.60	25,476.78	31,500.00	6,023.22	80.9
10-41-6193	COMPUTER HARDWARE & SERVICE	.00	674.04	3,500.00	2,825.96	19.3
10-41-6195	OPERATING SUPPLIES - GEN GOV	.00	733.15	1,750.00	1,016.85	41.9
10-41-6200	POSTAGE	356.61	1,726.47	4,250.00	2,523.53	40.6
10-41-6220	REP AND MAINT - VEHICLES	.00	540.00	2,000.00	1,460.00	27.0
10-41-6245	SHUTTLE EXPENSES	405.12	1,131.28	3,000.00	1,868.72	37.7
10-41-6250	SMALL TOOLS AND EQUIPMENT	.00	.00	4,585.00	4,585.00	.0
10-41-6265	TELEPHONE	376.41	775.60	2,750.00	1,974.40	28.2
10-41-6275	TRAVEL	.00	174.57	1,500.00	1,325.43	11.6
10-41-6285	TOURISM 1% BED TAX	.00	.00	11,000.00	11,000.00	.0
10-41-6286	COMMUNITY HEALTH	.00	.00	1,000.00	1,000.00	.0
10-41-6288	OUTSIDE AGENCY REQUEST	.00	.00	1,500.00	1,500.00	.0
10-41-9500	TRANSFERS OUT	14,166.67	56,666.68	170,000.00	113,333.32	33.3
	TOTAL GENERAL GOVT EXPENSES	54,950.46	263,793.88	832,913.00	569,119.12	31.7

TOWN OF JEROME
EXPENDITURES WITH COMPARISON TO BUDGET
FOR THE 4 MONTHS ENDING OCTOBER 31, 2026

GENERAL FUND

		PERIOD ACTUAL	YTD ACTUAL	BUDGET	UNEXPENDED	PCNT
	MAGISTRATE COURT EXPENSES					
10-42-5001	SALARIES AND WAGES	5,399.47	21,832.81	79,000.00	57,167.19	27.6
10-42-5006	LONGEVITY BONUS	.00	.00	90.00	90.00	.0
10-42-5010	FICA AND MEDICARE	413.05	1,670.18	6,070.00	4,399.82	27.5
10-42-5011	RETIREMENT	337.02	1,348.08	4,400.00	3,051.92	30.6
10-42-5013	WORKER'S COMPENSATION	27.85	64.00	260.00	196.00	24.6
10-42-5014	UNEMPLOYMENT	.00	.00	115.00	115.00	.0
10-42-6037	COURT SECURITY FUND EXPENSES	(17.55)	(147.37)	7,000.00	7,147.37	(2.1)
10-42-6101	ACCOUNTING AND AUDITING	.00	.00	6,000.00	6,000.00	.0
10-42-6110	CONTRACT SERVICES	2,926.96	5,047.81	10,500.00	5,452.19	48.1
10-42-6115	CONVENTIONS AND SEMINARS	.00	.00	600.00	600.00	.0
10-42-6116	TRAINING & EDUCATION	.00	.00	600.00	600.00	.0
10-42-6125	DUES AND SUBSCRIPTIONS	.00	25.00	600.00	575.00	4.2
10-42-6185	MISCELLANEOUS	.00	.00	200.00	200.00	.0
10-42-6190	OFFICE SUPPLIES	106.25	106.25	200.00	93.75	53.1
10-42-6191	COPIER & EQUIP LEASE EXP	.00	1,931.62	4,500.00	2,568.38	42.9
10-42-6195	OPERATING SUPPLIES - COURT	.00	.00	500.00	500.00	.0
10-42-6265	TELEPHONE	148.68	296.82	750.00	453.18	39.6
10-42-6275	TRAVEL	.00	.00	500.00	500.00	.0
	TOTAL MAGISTRATE COURT EXPENSES	9,341.73	32,175.20	121,885.00	89,709.80	26.4

TOWN OF JEROME
EXPENDITURES WITH COMPARISON TO BUDGET
FOR THE 4 MONTHS ENDING OCTOBER 31, 2026

GENERAL FUND

		PERIOD ACTUAL	YTD ACTUAL	BUDGET	UNEXPENDED	PCNT
	POLICE DEPT EXPENSES					
10-43-5001	SALARIES AND WAGES	38,126.85	148,398.94	468,000.00	319,601.06	31.7
10-43-5006	LONGEVITY BONUS	.00	528.00	1,925.00	1,397.00	27.4
10-43-5010	FICA AND MEDICARE	2,836.85	11,068.16	35,975.00	24,906.84	30.8
10-43-5011	RETIREMENT	5,071.20	19,360.39	57,000.00	37,639.61	34.0
10-43-5012	HEALTH INSURANCE	6,449.90	26,049.60	60,000.00	33,950.40	43.4
10-43-5013	WORKER'S COMPENSATION	4,251.04	9,158.57	32,000.00	22,841.43	28.6
10-43-5014	UNEMPLOYMENT	1.90	14.01	515.00	500.99	2.7
10-43-6105	ADVERTISING, PRINTING, & PUBLI	134.13	269.48	300.00	30.52	89.8
10-43-6110	CONTRACT SERVICES	600.00	1,095.00	1,250.00	155.00	87.6
10-43-6116	TRAINING & EDUCATION	.00	886.08	4,000.00	3,113.92	22.2
10-43-6120	DISPATCH FEES	4,228.43	16,982.85	51,000.00	34,017.15	33.3
10-43-6125	DUES AND SUBSCRIPTIONS	.00	.00	3,000.00	3,000.00	.0
10-43-6145	FUEL	1,582.81	4,263.94	12,000.00	7,736.06	35.5
10-43-6172	PROSECUTOR EXP	2,000.00	8,000.00	24,000.00	16,000.00	33.3
10-43-6185	MISCELLANEOUS	121.80	310.95	550.00	239.05	56.5
10-43-6192	SOFTWARE SERVICE & SUPPORT	2,608.05	6,454.62	13,000.00	6,545.38	49.7
10-43-6193	COMPUTER HARDWARE & SERVICE	.00	.00	5,500.00	5,500.00	.0
10-43-6195	OPERATING SUPPLIES - POLICE	269.76	923.90	2,000.00	1,076.10	46.2
10-43-6200	POSTAGE	.00	15.75	200.00	184.25	7.9
10-43-6220	REP AND MAINT - VEHICLES	1,352.22	4,231.21	9,000.00	4,768.79	47.0
10-43-6225	REP AND MAINT - EQUIPMENT	.00	.00	2,500.00	2,500.00	.0
10-43-6234	POLICE OFFICER SAFETY EQUIP EX	1,574.95	1,788.44	2,750.00	961.56	65.0
10-43-6250	SMALL TOOLS AND EQUIPMENT	195.00	234.29	2,750.00	2,515.71	8.5
10-43-6265	TELEPHONE	936.74	2,273.12	7,250.00	4,976.88	31.4
10-43-6280	UNIFORMS	.00	3,078.16	4,000.00	921.84	77.0
10-43-7025	VEHICLES, CAP OUTLAY, POLICE	.00	.00	21,000.00	21,000.00	.0
	TOTAL POLICE DEPT EXPENSES	72,341.63	265,385.46	821,465.00	556,079.54	32.3

GENERAL FUND

		PERIOD ACTUAL	YTD ACTUAL	BUDGET	UNEXPENDED	PCNT
	FIRE DEPT EXPENSES					
10-44-5001	SALARIES AND WAGES	23,097.62	84,716.39	283,000.00	198,283.61	29.9
10-44-5002	WILDLAND PERSONNEL	.00	13,348.69	39,000.00	25,651.31	34.2
10-44-5003	VOLUNTEER-EMPLOYEE PER CALL PE	1,485.00	4,215.00	17,000.00	12,785.00	24.8
10-44-5006	LONGEVITY BONUS	.00	268.00	510.00	242.00	52.6
10-44-5010	FICA AND MEDICARE	1,725.99	7,364.92	18,565.00	11,200.08	39.7
10-44-5011	RETIREMENT	2,059.73	8,309.35	22,000.00	13,690.65	37.8
10-44-5012	HEALTH INSURANCE	5,198.22	19,810.06	52,000.00	32,189.94	38.1
10-44-5013	WORKER'S COMPENSATION	2,938.36	6,479.08	19,800.00	13,320.92	32.7
10-44-5014	UNEMPLOYMENT	7.73	41.46	505.00	463.54	8.2
10-44-5015	RETIREMENT - VOLUNTEER CONTRIB	.00	.00	15,000.00	15,000.00	.0
10-44-6116	TRAINING & EDUCATION	.00	2,890.45	7,000.00	4,109.55	41.3
10-44-6120	DISPATCH FEES	751.00	3,073.13	8,800.00	5,726.87	34.9
10-44-6125	DUES AND SUBSCRIPTIONS	.00	50.00	750.00	700.00	6.7
10-44-6145	FUEL	808.16	2,351.91	5,500.00	3,148.09	42.8
10-44-6170	LEGAL EXP - FIRE	.00	250.00	1,500.00	1,250.00	16.7
10-44-6180	MEDICAL EXPENSES	.00	50.00	1,000.00	950.00	5.0
10-44-6181	MEDICAL SUPPLIES EXP	96.00	1,911.84	4,000.00	2,088.16	47.8
10-44-6185	MISCELLANEOUS	339.43	890.13	1,000.00	109.87	89.0
10-44-6192	SOFTWARE SERVICE & SUPPORT	358.56	1,689.12	4,250.00	2,560.88	39.7
10-44-6193	COMPUTER HARDWARE AND SERVICE	.00	330.64	2,000.00	1,669.36	16.5
10-44-6195	OPERATING SUPPLIES - FIRE DEPT	.00	316.75	1,000.00	683.25	31.7
10-44-6220	REP AND MAINT - VEHICLES	40.00	5,973.89	12,000.00	6,026.11	49.8
10-44-6225	REP AND MAINT - EQUIPMENT	.00	.00	3,000.00	3,000.00	.0
10-44-6250	SMALL TOOLS AND EQUIPMENT	.00	.00	9,000.00	9,000.00	.0
10-44-6265	TELEPHONE	532.14	1,261.33	6,000.00	4,738.67	21.0
10-44-6270	TRAINING CENTER ASSESSMENT	.00	.00	6,000.00	6,000.00	.0
10-44-6276	MISCELLANEOUS WILDLAND	21.96	146.70	10,000.00	9,853.30	1.5
	TOTAL FIRE DEPT EXPENSES	39,459.90	165,738.84	550,180.00	384,441.16	30.1

TOWN OF JEROME
EXPENDITURES WITH COMPARISON TO BUDGET
FOR THE 4 MONTHS ENDING OCTOBER 31, 2026

GENERAL FUND

		PERIOD ACTUAL	YTD ACTUAL	BUDGET	UNEXPENDED	PCNT
	LIBRARY EXPENSES					
10-45-5001	SALARIES AND WAGES	6,809.56	27,551.48	101,000.00	73,448.52	27.3
10-45-5006	LONGEVITY BONUS	50.00	240.00	760.00	520.00	31.6
10-45-5007	LIBRARY BENEFIT STIPEND	549.56	2,198.24	7,215.00	5,016.76	30.5
10-45-5010	FICA AND MEDICARE	566.30	2,292.20	8,750.00	6,457.80	26.2
10-45-5011	RETIREMENT	553.34	2,213.36	8,500.00	6,286.64	26.0
10-45-5012	HEALTH INSURANCE	43.88	175.52	575.00	399.48	30.5
10-45-5013	WORKER'S COMPENSATION	45.08	94.80	455.00	360.20	20.8
10-45-5014	UNEMPLOYMENT	2.97	14.11	280.00	265.89	5.0
10-45-6110	CONTRACT SERVICES	.00	.00	3,000.00	3,000.00	.0
10-45-6125	COUNTY MEMBERSHIP DUES	.00	.00	1,875.00	1,875.00	.0
10-45-6185	MISCELLANEOUS	.00	.00	250.00	250.00	.0
10-45-6190	OFFICE SUPPLIES	.00	.00	400.00	400.00	.0
10-45-6195	OPERATING SUPPLIES - LIBRARY	847.47	2,071.58	4,750.00	2,678.42	43.6
10-45-6205	PRINT AND NON-PRINT MATERIALS	37.01	298.22	2,500.00	2,201.78	11.9
10-45-6225	REP AND MAINT - EQUIPMENT	.00	.00	200.00	200.00	.0
10-45-6250	SMALL TOOLS AND EQUIPMENT	.00	.00	750.00	750.00	.0
10-45-6265	TELEPHONE	133.69	267.04	1,000.00	732.96	26.7
10-45-6266	E-RATE EXP	24.00	320.00	750.00	430.00	42.7
	TOTAL LIBRARY EXPENSES	9,662.86	37,736.55	143,010.00	105,273.45	26.4
	PLANNING & ZONING EXP					
10-46-5001	SALARIES AND WAGES	5,057.38	19,418.92	76,975.00	57,556.08	25.2
10-46-5006	LONGEVITY BONUS	.00	.00	428.00	428.00	.0
10-46-5010	FICA AND MEDICARE	382.81	1,469.25	5,900.00	4,430.75	24.9
10-46-5011	RETIREMENT	436.26	1,745.04	7,050.00	5,304.96	24.8
10-46-5012	HEALTH INSURANCE	982.82	3,931.28	10,000.00	6,068.72	39.3
10-46-5013	WORKER'S COMPENSATION	62.58	116.31	695.00	578.69	16.7
10-46-5014	UNEMPLOYMENT	1.60	4.54	112.00	107.46	4.1
10-46-6105	ADVERTISING, PRINTING, & PUBLI	.00	.00	150.00	150.00	.0
10-46-6110	CONTRACT SERVICES	.00	.00	100.00	100.00	.0
10-46-6116	TRAINING AND EDUCATION	.00	.00	1,000.00	1,000.00	.0
10-46-6170	LEGAL EXP - P&Z	.00	975.00	10,500.00	9,525.00	9.3
10-46-6185	MISCELLANEOUS	56.61	550.48	7,500.00	6,949.52	7.3
10-46-6192	SOFTWARE MAINTENANCE & SUPPORT	324.00	3,072.75	4,750.00	1,677.25	64.7
10-46-6195	OPERATING SUPPLIES	.00	25.45	.00	(25.45)	.0
10-46-6250	SMALL TOOLS AND EQUIPMENT	.00	.00	100.00	100.00	.0
10-46-6265	TELEPHONE	75.74	208.24	850.00	641.76	24.5
10-46-6275	TRAVEL	.00	.00	250.00	250.00	.0
10-46-6310	HISTORIC PRESERVATION EXP	.00	.00	3,000.00	3,000.00	.0
	TOTAL PLANNING & ZONING EXP	7,379.80	31,517.26	129,360.00	97,842.74	24.4

GENERAL FUND

		PERIOD ACTUAL	YTD ACTUAL	BUDGET	UNEXPENDED	PCNT
	PARKS EXPENSES					
10-47-5001	SALARIES AND WAGES	706.17	2,456.87	9,100.00	6,643.13	27.0
10-47-5006	LONGEVITY BONUS	.00	8.01	40.00	31.99	20.0
10-47-5010	FICA AND MEDICARE	53.22	185.31	695.00	509.69	26.7
10-47-5011	RETIREMENT	68.34	259.06	1,100.00	840.94	23.6
10-47-5012	HEALTH INSURANCE	206.47	846.07	2,300.00	1,453.93	36.8
10-47-5013	WORKER'S COMPENSATION	49.61	103.67	450.00	346.33	23.0
10-47-5014	UNEMPLOYMENT	.00	.29	10.00	9.71	2.9
10-47-6145	FUEL	52.97	197.37	800.00	602.63	24.7
10-47-6170	LEGAL	.00	.00	500.00	500.00	.0
10-47-6185	MISCELLANEOUS	18.50	47.83	250.00	202.17	19.1
10-47-6192	SOFTWARE SERVICE & SUPPORT	.00	.00	500.00	500.00	.0
10-47-6195	OPERATING SUPPLIES - PARKS	.00	11.79	250.00	238.21	4.7
10-47-6215	REP AND MAINT - BUILDING	.00	.00	200.00	200.00	.0
10-47-6220	REP AND MAINT - VEHICLES	27.45	449.21	2,500.00	2,050.79	18.0
10-47-6225	REP AND MAINT - EQUIPMENT	25.09	170.28	850.00	679.72	20.0
10-47-6230	REP AND MAINT - INFRASTRUCTURE	.00	.00	1,000.00	1,000.00	.0
10-47-6250	SMALL TOOLS AND EQUIPMENT	.00	.00	550.00	550.00	.0
10-47-6280	UNIFORM EXP PARKS	13.33	45.74	550.00	504.26	8.3
10-47-6285	UTILITIES	60.95	939.51	3,000.00	2,060.49	31.3
	TOTAL PARKS EXPENSES	1,282.10	5,721.01	24,645.00	18,923.99	23.2
	PROPERTIES EXPENSES					
10-48-5001	SALARIES AND WAGES	4,372.86	15,213.63	56,000.00	40,786.37	27.2
10-48-5006	LONGEVITY BONUS	.00	49.59	225.00	175.41	22.0
10-48-5010	FICA AND MEDICARE	329.50	1,147.54	4,310.00	3,162.46	26.6
10-48-5011	RETIREMENT	423.15	1,603.98	6,760.00	5,156.02	23.7
10-48-5012	HEALTH INSURANCE	1,278.48	5,239.27	14,000.00	8,760.73	37.4
10-48-5013	WORKER'S COMPENSATION	291.33	626.18	2,500.00	1,873.82	25.1
10-48-5014	UNEMPLOYMENT	.00	1.78	47.00	45.22	3.8
10-48-6110	CONTRACT SERVICES	1,131.22	1,746.22	10,500.00	8,753.78	16.6
10-48-6140	ENGINEERING FEES	.00	.00	5,500.00	5,500.00	.0
10-48-6145	FUEL	339.79	938.97	1,750.00	811.03	53.7
10-48-6185	MISCELLANEOUS	37.75	259.54	1,250.00	990.46	20.8
10-48-6192	SOFTWARE SERVICE & SUPPORT	.00	.00	1,000.00	1,000.00	.0
10-48-6195	OPERATING SUPPLIES - PROPERTIE	.00	44.52	1,000.00	955.48	4.5
10-48-6215	R&M BUILDING - PROPERTIES	685.24	5,036.22	50,000.00	44,963.78	10.1
10-48-6220	REP AND MAINT - VEHICLES	27.45	486.42	2,750.00	2,263.58	17.7
10-48-6225	REP AND MAINT - EQUIPMENT	78.62	78.62	1,100.00	1,021.38	7.2
10-48-6230	REP AND MAINT - INFRASTRUCTURE	.00	.00	17,500.00	17,500.00	.0
10-48-6250	SMALL TOOLS AND EQUIPMENT	708.90	1,405.17	1,500.00	94.83	93.7
10-48-6280	UNIFORM EXP PROPERTIES	.00	32.40	550.00	517.60	5.9
10-48-6285	UTILITIES	1,191.82	14,206.87	48,000.00	33,793.13	29.6
	TOTAL PROPERTIES EXPENSES	10,896.11	48,116.92	226,242.00	178,125.08	21.3

TOWN OF JEROME
EXPENDITURES WITH COMPARISON TO BUDGET
FOR THE 4 MONTHS ENDING OCTOBER 31, 2026

GENERAL FUND

	PERIOD ACTUAL	YTD ACTUAL	BUDGET	UNEXPENDED	PCNT
TOTAL FUND EXPENDITURES	205,314.59	850,185.12	2,849,700.00	1,999,514.88	29.8
NET REVENUE OVER EXPENDITURES	(47,249.02)	(154,922.77)	.00	154,922.77	.0

TOWN OF JEROME
BALANCE SHEET
OCTOBER 31, 2026

UTILITY FUND

	ASSETS			
20-00-1000	CASH - COMBINED FUND		(7,546.82)	
20-00-1015	UTILITIES A/R		74,912.73	
20-00-1080	WWTP REGIONS ACCT		717,397.39	
20-00-1125	MISCELLANEOUS		27.21	
20-00-1190	ALLOWANCE FOR DOUBTFUL ACCTS		(21,000.00)	
20-00-1515	BUILDINGS-PROP, PLANT, EQUIP		2,545,159.57	
20-00-1518	INFRASTRUCTURE		1,553,803.85	
20-00-1520	OPERATING EQUIPMENT-PROP, PLAN		460,048.98	
20-00-1540	CONSTRUCTION WIP		860,545.05	
20-00-1550	BUILDINGS-ACC DEPRECIATION		(1,932,627.40)	
20-00-1555	OPERATING EQUIPMENT-ACC DEPREC		(198,567.65)	
	TOTAL ASSETS			4,052,152.91
	LIABILITIES AND EQUITY			
	LIABILITIES			
20-00-2500	SALES TAX PAYABLE		265.15	
20-00-2600	CUSTOMER DEPOSITS		39,755.71	
20-00-2700	COMPENSATED ABSENCES		9,367.80	
20-00-2975	ACCRUED INTEREST PAYABLE		2,454.11	
20-00-2980	WWTP LOAN		1,819,000.00	
20-00-2981	TRASH TRUCK LOAN		224,837.20	
	TOTAL LIABILITIES			2,095,679.97
	FUND EQUITY			
20-00-3002	UNRESTRICTED FUND BALANCE		1,150,228.66	
20-00-3051	UNRESTRICTED FUND BALANCE		924,299.00	
20-00-3052	UNRESTRICED FUND BALANCE		(171,017.00)	
	REVENUE OVER EXPENDITURES - YTD	52,962.28		
	BALANCE - CURRENT DATE		52,962.28	
	TOTAL FUND EQUITY			1,956,472.94
	TOTAL LIABILITIES AND EQUITY			4,052,152.91

TOWN OF JEROME
REVENUES WITH COMPARISON TO BUDGET
FOR THE 4 MONTHS ENDING OCTOBER 31, 2026

UTILITY FUND

		PERIOD ACTUAL	YTD ACTUAL	BUDGET	UNEARNED	PCNT
	WATER REVENUE					
20-50-4010	FUND BALANCE RESERVES	8,333.33	33,333.32	100,000.00	66,666.68	33.3
20-50-4085	WATER USAGE FEES	16,968.25	66,115.37	232,000.00	165,884.63	28.5
20-50-4100	WATER CONNECTION FEES	.00	.00	5,000.00	5,000.00	.0
20-50-4500	MISCELLANEOUS	189.74	564.64	1,750.00	1,185.36	32.3
20-50-4900	TRANSFERS IN	8,333.33	33,333.32	100,000.00	66,666.68	33.3
	TOTAL WATER REVENUE	33,824.65	133,346.65	438,750.00	305,403.35	30.4
	SEWER REVENUE					
20-51-4085	SEWER USAGE FEES	18,351.21	71,008.84	239,000.00	167,991.16	29.7
20-51-4900	TRANSFERS IN	6,666.67	26,666.68	80,000.00	53,333.32	33.3
	TOTAL SEWER REVENUE	25,017.88	97,675.52	319,000.00	221,324.48	30.6
	SANITATION REVENUE					
20-52-4085	SANITATION USAGE FEES	14,300.86	57,857.09	190,505.00	132,647.91	30.4
20-52-4900	TRANSFERS IN	10,416.66	41,666.64	125,000.00	83,333.36	33.3
	TOTAL SANITATION REVENUE	24,717.52	99,523.73	315,505.00	215,981.27	31.5
	TOTAL FUND REVENUE	83,560.05	330,545.90	1,073,255.00	742,709.10	30.8

TOWN OF JEROME
EXPENDITURES WITH COMPARISON TO BUDGET
FOR THE 4 MONTHS ENDING OCTOBER 31, 2026

UTILITY FUND

		PERIOD ACTUAL	YTD ACTUAL	BUDGET	UNEXPENDED	PCNT
	WATER EXPENDITURES					
20-50-5001	SALARIES AND WAGES	7,712.89	26,834.29	99,360.00	72,525.71	27.0
20-50-5006	LONGEVITY BONUS	.00	87.47	390.00	302.53	22.4
20-50-5010	FICA AND MEDICARE	581.12	2,023.97	7,600.00	5,576.03	26.6
20-50-5011	RETIREMENT	746.40	2,829.14	11,950.00	9,120.86	23.7
20-50-5012	HEALTH INSURANCE	2,254.83	9,240.99	25,250.00	16,009.01	36.6
20-50-5013	WORKER'S COMPENSATION	609.96	1,224.07	5,600.00	4,375.93	21.9
20-50-5014	UNEMPLOYMENT	.00	3.14	100.00	96.86	3.1
20-50-6110	CONTRACT SERVICES	1,275.00	4,505.00	16,000.00	11,495.00	28.2
20-50-6116	TRAINING AND EDUCATION	.00	.00	500.00	500.00	.0
20-50-6135	PERMIT FEE EXP - WATER	5,260.43	5,260.43	1,250.00	(4,010.43)	420.8
20-50-6140	ENGINEERING FEES	.00	.00	7,000.00	7,000.00	.0
20-50-6145	FUEL	269.90	986.41	3,250.00	2,263.59	30.4
20-50-6155	INSURANCE	.00	4,920.00	17,500.00	12,580.00	28.1
20-50-6170	LEGAL EXP - WATER	.00	.00	8,500.00	8,500.00	.0
20-50-6185	MISCELLANEOUS	363.16	1,184.34	1,750.00	565.66	67.7
20-50-6192	SOFTWARE SUPPORT EXP - WATER	.00	8,679.44	10,465.00	1,785.56	82.9
20-50-6195	OPERATING SUPPLIES - WATER	.00	4,478.46	7,750.00	3,271.54	57.8
20-50-6215	R&M BUILDING - WATER	.00	.00	500.00	500.00	.0
20-50-6220	REP AND MAINT - VEHICLES	27.45	660.10	3,100.00	2,439.90	21.3
20-50-6225	REP AND MAINT - EQUIPMENT	25.09	25.09	1,500.00	1,474.91	1.7
20-50-6230	REP AND MAINT - INFRASTRUCTURE	855.72	2,935.70	130,000.00	127,064.30	2.3
20-50-6232	SPRINGS SECURITY EXP	160.75	482.25	10,000.00	9,517.75	4.8
20-50-6240	SERVICE TESTS/SYSTEM TESTING	15.00	348.00	850.00	502.00	40.9
20-50-6250	SMALL TOOLS AND EQUIPMENT	490.68	614.47	2,000.00	1,385.53	30.7
20-50-6271	DWR FEE	.00	.00	1,000.00	1,000.00	.0
20-50-6280	UNIFORM EXP WATER	6.66	39.06	575.00	535.94	6.8
20-50-6285	UTILITIES EXP - WATER	.00	124.73	575.00	450.27	21.7
20-50-6290	ADMINISTRATIVE CHARGE	5,369.58	21,478.32	64,435.00	42,956.68	33.3
	TOTAL WATER EXPENDITURES	26,024.62	98,964.87	438,750.00	339,785.13	22.6

TOWN OF JEROME
EXPENDITURES WITH COMPARISON TO BUDGET
FOR THE 4 MONTHS ENDING OCTOBER 31, 2026

UTILITY FUND

		PERIOD ACTUAL	YTD ACTUAL	BUDGET	UNEXPENDED	PCNT
	SEWER EXPENDITURES					
20-51-5001	SALARIES AND WAGES	4,182.60	14,552.38	54,000.00	39,447.62	27.0
20-51-5006	LONGEVITY BONUS	.00	47.43	220.00	172.57	21.6
20-51-5010	FICA AND MEDICARE	315.20	1,097.69	4,250.00	3,152.31	25.8
20-51-5011	RETIREMENT	404.76	1,534.28	6,500.00	4,965.72	23.6
20-51-5012	HEALTH INSURANCE	1,222.78	5,011.44	14,000.00	8,988.56	35.8
20-51-5013	WORKER'S COMPENSATION	317.06	649.07	2,850.00	2,200.93	22.8
20-51-5014	UNEMPLOYMENT	.00	1.70	45.00	43.30	3.8
20-51-6110	CONTRACT SERVICES	3,875.00	11,625.00	51,000.00	39,375.00	22.8
20-51-6135	PERMIT FEE EXP - SEWER	.00	7,648.97	3,500.00	(4,148.97)	218.5
20-51-6140	ENGINEERING FEES	.00	.00	14,000.00	14,000.00	.0
20-51-6145	FUEL	142.16	552.08	2,000.00	1,447.92	27.6
20-51-6155	INSURANCE	.00	4,920.00	20,000.00	15,080.00	24.6
20-51-6170	LEGAL EXP - SEWER	.00	200.00	7,500.00	7,300.00	2.7
20-51-6185	MISCELLANEOUS	363.16	1,184.35	2,000.00	815.65	59.2
20-51-6192	SOFTWARE SUPPORT EXP - SEWER	.00	8,679.45	8,250.00	(429.45)	105.2
20-51-6195	OPERATING SUPPLIES - SEWER	.00	384.77	12,500.00	12,115.23	3.1
20-51-6220	REP AND MAINT - VEHICLES	27.45	449.22	3,000.00	2,550.78	15.0
20-51-6225	REP AND MAINT - EQUIPMENT	25.09	25.09	650.00	624.91	3.9
20-51-6230	REP AND MAINT - INFRASTRUCTURE	9,948.18	10,012.80	32,000.00	21,987.20	31.3
20-51-6240	SERVICE TESTS/SYSTEM TESTING	965.40	4,411.80	11,750.00	7,338.20	37.6
20-51-6250	SMALL TOOLS & EQUIPMENT (UNDER	.00	46.10	1,500.00	1,453.90	3.1
20-51-6280	UNIFORM EXP SEWER	6.67	39.08	550.00	510.92	7.1
20-51-6285	UTILITIES	.00	479.32	2,500.00	2,020.68	19.2
20-51-6290	ADMINISTRATIVE CHARGE	5,369.58	21,478.32	64,435.00	42,956.68	33.3
	TOTAL SEWER EXPENDITURES	27,165.09	95,030.34	319,000.00	223,969.66	29.8

TOWN OF JEROME
EXPENDITURES WITH COMPARISON TO BUDGET
FOR THE 4 MONTHS ENDING OCTOBER 31, 2026

UTILITY FUND

		PERIOD ACTUAL	YTD ACTUAL	BUDGET	UNEXPENDED	PCNT
	SANITATION EXPENDITURES					
20-52-5001	SALARIES AND WAGES	6,654.28	23,151.82	86,000.00	62,848.18	26.9
20-52-5006	LONGEVITY BONUS	.00	75.46	345.00	269.54	21.9
20-52-5010	FICA AND MEDICARE	501.38	1,746.27	6,750.00	5,003.73	25.9
20-52-5011	RETIREMENT	643.95	2,440.94	10,300.00	7,859.06	23.7
20-52-5012	HEALTH INSURANCE	1,945.39	7,972.76	21,500.00	13,527.24	37.1
20-52-5013	WORKER'S COMPENSATION	737.75	1,420.00	7,950.00	6,530.00	17.9
20-52-5014	UNEMPLOYMENT	.00	2.71	75.00	72.29	3.6
20-52-6111	RECYCLING CONTRACT EXP	245.00	585.00	2,900.00	2,315.00	20.2
20-52-6116	TRAINING & EDUCATION	.00	.00	250.00	250.00	.0
20-52-6142	EQUIPMENT RENTALS	.00	.00	1,000.00	1,000.00	.0
20-52-6145	FUEL	548.87	1,933.97	6,000.00	4,066.03	32.2
20-52-6155	INSURANCE	.00	4,920.00	14,000.00	9,080.00	35.1
20-52-6165	LANDFILL TIPPING FEES	2,208.32	5,679.11	26,000.00	20,320.89	21.8
20-52-6185	MISCELLANEOUS	458.16	1,332.42	8,000.00	6,667.58	16.7
20-52-6192	SOFTWARE SUPPORT EXP - TRASH	.00	6,448.15	6,500.00	51.85	99.2
20-52-6195	OPERATING SUPPLIES - TRASH	.00	191.80	600.00	408.20	32.0
20-52-6220	REP AND MAINT - VEHICLES	27.44	2,250.84	9,500.00	7,249.16	23.7
20-52-6225	REP AND MAINT - EQUIPMENT	25.09	179.22	600.00	420.78	29.9
20-52-6230	R&M TRASH - INFRASTRUCTURE	.00	33.23	250.00	216.77	13.3
20-52-6250	SMALL TOOLS AND EQUIPMENT	137.83	1,707.29	2,000.00	292.71	85.4
20-52-6280	UNIFORM EXP TRASH	6.66	39.06	550.00	510.94	7.1
20-52-6290	ADMINISTRATIVE CHARGE	5,369.59	21,478.36	64,435.00	42,956.64	33.3
20-52-8040	DEBT SERVICE	.00	.00	30,000.00	30,000.00	.0
20-52-9500	TRANSFERS OUT	.00	.00	10,000.00	10,000.00	.0
	TOTAL SANITATION EXPENDITURES	19,509.71	83,588.41	315,505.00	231,916.59	26.5
	TOTAL FUND EXPENDITURES	72,699.42	277,583.62	1,073,255.00	795,671.38	25.9
	NET REVENUE OVER EXPENDITURES	10,860.63	52,962.28	.00	(52,962.28)	.0

TOWN OF JEROME
BALANCE SHEET
OCTOBER 31, 2026

HURF FUND

	ASSETS			
30-00-1000	CASH - COMBINED FUND		(684,893.09)	
30-00-1022	OAZ HURF SAVINGS		763,199.66	
	TOTAL ASSETS			78,306.57
	LIABILITIES AND EQUITY			
	FUND EQUITY			
30-00-3002	UNRESTRICTED FUND BALANCE		72,488.56	
	REVENUE OVER EXPENDITURES - YTD	5,818.01		
	BALANCE - CURRENT DATE		5,818.01	
	TOTAL FUND EQUITY			78,306.57
	TOTAL LIABILITIES AND EQUITY			78,306.57

TOWN OF JEROME
REVENUES WITH COMPARISON TO BUDGET
FOR THE 4 MONTHS ENDING OCTOBER 31, 2026

HURF FUND

		PERIOD ACTUAL	YTD ACTUAL	BUDGET	UNEARNED	PCNT
	HURF REVENUE					
30-30-4010	HURF FUND BALANCE RESERVE	.00	.00	10,000.00	10,000.00	.0
30-30-4020	HURF REVENUE	3,494.74	10,642.39	46,750.00	36,107.61	22.8
30-30-4300	INTEREST AND INVESTMENT EARNIN	318.88	1,264.45	3,250.00	1,985.55	38.9
30-30-4900	TRANSFERS IN	9,166.67	36,666.68	110,000.00	73,333.32	33.3
	TOTAL HURF REVENUE	12,980.29	48,573.52	170,000.00	121,426.48	28.6
	TOTAL FUND REVENUE	12,980.29	48,573.52	170,000.00	121,426.48	28.6

TOWN OF JEROME
EXPENDITURES WITH COMPARISON TO BUDGET
FOR THE 4 MONTHS ENDING OCTOBER 31, 2026

HURF FUND

		PERIOD ACTUAL	YTD ACTUAL	BUDGET	UNEXPENDED	PCNT
	HURF EXPENDITURE					
30-30-5001	SALARIES AND WAGES	5,768.15	21,211.84	45,500.00	24,288.16	46.6
30-30-5006	LONGEVITY BONUS	.00	335.04	450.00	114.96	74.5
30-30-5010	FICA AND MEDICARE	437.20	1,632.07	3,500.00	1,867.93	46.6
30-30-5011	RETIREMENT	341.72	1,295.20	5,500.00	4,204.80	23.6
30-30-5012	HEALTH INSURANCE	1,032.21	4,230.11	11,250.00	7,019.89	37.6
30-30-5013	WORKER'S COMPENSATION	307.11	694.63	2,250.00	1,555.37	30.9
30-30-5014	UNEMPLOYMENT	.00	1.45	37.00	35.55	3.9
30-30-6140	ENGINEERING FEES	.00	.00	2,500.00	2,500.00	.0
30-30-6142	EQUIPMENT RENTALS	.00	.00	1,000.00	1,000.00	.0
30-30-6145	FUEL	45.04	360.01	1,500.00	1,139.99	24.0
30-30-6155	INSURANCE	.00	273.00	12,500.00	12,227.00	2.2
30-30-6185	MISCELLANEOUS	18.50	311.78	1,000.00	688.22	31.2
30-30-6192	SOFTWARE SERVICE & SUPPORT	.00	1,682.54	1,650.00	(32.54)	102.0
30-30-6195	OPERATING SUPPLIES - HURF	.00	11.80	500.00	488.20	2.4
30-30-6210	PUBLIC RESTROOM SUPPLIES	.00	1,327.90	7,250.00	5,922.10	18.3
30-30-6215	REPAIR & MAINTENANCE - BUILDIN	.00	.00	500.00	500.00	.0
30-30-6220	REP AND MAINT - VEHICLES	27.44	449.22	3,000.00	2,550.78	15.0
30-30-6225	REP AND MAINT - EQUIPMENT	25.10	105.26	1,000.00	894.74	10.5
30-30-6230	REP AND MAINT - INFRASTRUCTURE	336.39	336.39	30,000.00	29,663.61	1.1
30-30-6250	SMALL TOOLS AND EQUIPMENT	.00	.00	10,158.00	10,158.00	.0
30-30-6255	STREET LIGHTS	1,265.13	5,060.52	14,500.00	9,439.48	34.9
30-30-6260	STREET SUPPLIES	95.99	95.99	4,000.00	3,904.01	2.4
30-30-6280	UNIFORM EXP - HURF	6.66	39.08	550.00	510.92	7.1
30-30-6290	ADMINISTRATIVE CHARGE	825.42	3,301.68	9,905.00	6,603.32	33.3
	TOTAL HURF EXPENDITURE	10,532.06	42,755.51	170,000.00	127,244.49	25.2
	TOTAL FUND EXPENDITURES	10,532.06	42,755.51	170,000.00	127,244.49	25.2
	NET REVENUE OVER EXPENDITURES	2,448.23	5,818.01	.00	(5,818.01)	.0

TOWN OF JEROME
BALANCE SHEET
OCTOBER 31, 2026

PARKING FUND

	ASSETS			
35-00-1000	CASH - COMBINED FUND		306,036.42	
	TOTAL ASSETS			306,036.42
	LIABILITIES AND EQUITY			
	FUND EQUITY			
35-00-3002	UNRESTRICTED FUND BALANCE		326,735.51	
	REVENUE OVER EXPENDITURES - YTD	(20,699.09)		
	BALANCE - CURRENT DATE		(20,699.09)	
	TOTAL FUND EQUITY			306,036.42
	TOTAL LIABILITIES AND EQUITY			306,036.42

TOWN OF JEROME
REVENUES WITH COMPARISON TO BUDGET
FOR THE 4 MONTHS ENDING OCTOBER 31, 2026

PARKING FUND

		PERIOD ACTUAL	YTD ACTUAL	BUDGET	UNEARNED	PCNT
	PARKING FUND REVENUE					
35-35-4042	PARKING KIOSK REVENUE	51,561.75	155,170.00	534,000.00	378,830.00	29.1
	TOTAL PARKING FUND REVENUE	51,561.75	155,170.00	534,000.00	378,830.00	29.1
	TOTAL FUND REVENUE	51,561.75	155,170.00	534,000.00	378,830.00	29.1

TOWN OF JEROME
EXPENDITURES WITH COMPARISON TO BUDGET
FOR THE 4 MONTHS ENDING OCTOBER 31, 2026

PARKING FUND

		PERIOD ACTUAL	YTD ACTUAL	BUDGET	UNEXPENDED	PCNT
	PARKING FUND EXPENDITURE					
35-35-5001	SALARIES AND WAGES	2,626.50	11,738.35	42,000.00	30,261.65	28.0
35-35-5006	LONGEVITY BONUS	.00	110.00	260.00	150.00	42.3
35-35-5010	FICA MATCH	200.92	906.38	3,050.00	2,143.62	29.7
35-35-5013	WORKER'S COMPENSATION	142.25	301.70	950.00	648.30	31.8
35-35-5014	UNEMPLOYMENT	.00	.00	125.00	125.00	.0
35-35-6145	FUEL	34.67	34.67	1,250.00	1,215.33	2.8
35-35-6185	MISCELLANEOUS	.00	604.43	1,250.00	645.57	48.4
35-35-6186	BANK CHARGES	.00	.00	125.00	125.00	.0
35-35-6188	CREDIT CARD PROCESSING FEES	3,235.00	8,279.53	30,150.00	21,870.47	27.5
35-35-6192	SOFTWARE SERVICE AND SUPPORT	7,924.12	11,094.11	24,000.00	12,905.89	46.2
35-35-6195	OPERATING SUPPLIES	.00	2,751.06	3,000.00	248.94	91.7
35-35-6265	TELEPHONE	41.74	124.22	1,200.00	1,075.78	10.4
35-35-6290	ADMINISTRATIVE CHARGE	553.33	2,213.32	6,640.00	4,426.68	33.3
35-35-7000	CAPITAL OUTLAY	.00	4,378.00	20,000.00	15,622.00	21.9
35-35-9500	TRANSFERS OUT	33,333.33	133,333.32	400,000.00	266,666.68	33.3
	TOTAL PARKING FUND EXPENDITURE	48,091.86	175,869.09	534,000.00	358,130.91	32.9
	TOTAL FUND EXPENDITURES	48,091.86	175,869.09	534,000.00	358,130.91	32.9
	NET REVENUE OVER EXPENDITURES	3,469.89	(20,699.09)	.00	20,699.09	.0

TOWN OF JEROME
BALANCE SHEET
OCTOBER 31, 2026

FIRE DEPT PENSION & RETIREMENT

	ASSETS		
40-00-1000	CASH - COMBINED FUND	15,301.40	
40-00-1010	INVESTMENTS - PENSION & RELIEF	210,186.63	
40-00-1011	PENSION FUND CASH	21,564.11	
	TOTAL ASSETS		247,052.14
	LIABILITIES AND EQUITY		
	FUND EQUITY		
40-00-3002	UNRESTRICTED FUND BALANCE	247,052.14	
	TOTAL FUND EQUITY		247,052.14
	TOTAL LIABILITIES AND EQUITY		247,052.14

TOWN OF JEROME
REVENUES WITH COMPARISON TO BUDGET
FOR THE 4 MONTHS ENDING OCTOBER 31, 2026

FIRE DEPT PENSION & RETIREMENT

		PERIOD ACTUAL	YTD ACTUAL	BUDGET	UNEARNED	PCNT
	FIRE DEPT P&R REVENUE					
40-60-4250	TOWN CONTRIBUTION	.00	.00	15,000.00	15,000.00	.0
40-60-4255	STATE PENSION CONTRIBUTION	.00	.00	2,750.00	2,750.00	.0
40-60-4256	RETIREMENT REV FD P&R	.00	.00	15,000.00	15,000.00	.0
	TOTAL FIRE DEPT P&R REVENUE	.00	.00	32,750.00	32,750.00	.0
	TOTAL FUND REVENUE	.00	.00	32,750.00	32,750.00	.0

TOWN OF JEROME
EXPENDITURES WITH COMPARISON TO BUDGET
FOR THE 4 MONTHS ENDING OCTOBER 31, 2026

FIRE DEPT PENSION & RETIREMENT

		PERIOD ACTUAL	YTD ACTUAL	BUDGET	UNEXPENDED	PCNT
	FIRE DEPT P&R EXPENDITURE					
40-60-6235	RETIREMENT EXP FD P&R	.00	.00	32,750.00	32,750.00	.0
	TOTAL FIRE DEPT P&R EXPENDITURE	.00	.00	32,750.00	32,750.00	.0
	TOTAL FUND EXPENDITURES	.00	.00	32,750.00	32,750.00	.0
	NET REVENUE OVER EXPENDITURES	.00	.00	.00	.00	.0

TOWN OF JEROME
BALANCE SHEET
OCTOBER 31, 2026

OPERATING GRANTS REVENUE

	ASSETS			
50-00-1000	CASH - COMBINED FUND		(140,404.14)	
50-00-1120	OPR GRANTS RECEIVABLE		38,300.31	
50-00-1800	INVENTORY		13,193.06	
	TOTAL ASSETS			(88,910.77)
	LIABILITIES AND EQUITY			
	LIABILITIES			
50-00-2755	DEFERRED REVENUE - OPR GRANTS		75,592.37	
	TOTAL LIABILITIES			75,592.37
	FUND EQUITY			
50-00-3002	UNRESTRICTED FUND BALANCE		5,781.83	
	REVENUE OVER EXPENDITURES - YTD	(170,284.97)		
	BALANCE - CURRENT DATE		(170,284.97)	
	TOTAL FUND EQUITY			(164,503.14)
	TOTAL LIABILITIES AND EQUITY			(88,910.77)

TOWN OF JEROME
REVENUES WITH COMPARISON TO BUDGET
FOR THE 4 MONTHS ENDING OCTOBER 31, 2026

OPERATING GRANTS REVENUE

		PERIOD ACTUAL	YTD ACTUAL	BUDGET	UNEARNED	PCNT
	OPERATING GRANTS REVENUE					
50-40-4066	RICO REV - OPR GRANTS	.00	.00	12,000.00	12,000.00	.0
50-40-4067	POLICE DEPT REV - OPR GRANTS	.00	.00	30,000.00	30,000.00	.0
50-40-4068	FIRE DEPT REV - OPR GRANTS	.00	.00	67,500.00	67,500.00	.0
50-40-4101	WATER TOWER SITING GRANT	.00	.00	45,000.00	45,000.00	.0
50-40-4102	YAVAPAI COUNTY STORM DRAINAGE/	.00	.00	50,000.00	50,000.00	.0
50-40-4105	COMMUNITY & FOUNDATION GRANT R	.00	.00	20,000.00	20,000.00	.0
50-40-4185	MISCELLANEOUS GRANTS	.00	.00	500,000.00	500,000.00	.0
	TOTAL OPERATING GRANTS REVENUE	.00	.00	724,500.00	724,500.00	.0
	TOTAL FUND REVENUE	.00	.00	724,500.00	724,500.00	.0

TOWN OF JEROME
EXPENDITURES WITH COMPARISON TO BUDGET
FOR THE 4 MONTHS ENDING OCTOBER 31, 2026

OPERATING GRANTS REVENUE

		PERIOD ACTUAL	YTD ACTUAL	BUDGET	UNEXPENDED	PCNT
	OPERATING GRANTS EXPENDITURE					
50-40-6101	WATER TOWER SITING GRANT	.00	.00	45,000.00	45,000.00	.0
50-40-6102	YAVAPAI COUNTY STORM DRAINAGE/	154,562.47	157,549.97	50,000.00	(107,549.97)	315.1
50-40-6105	COMMUNITY INVESTMENT	.00	.00	20,000.00	20,000.00	.0
50-40-6111	WIFA WATER CONSERVATION EXP	(9,858.27)	.00	.00	.00	.0
50-40-6185	USE OF MISCELLANEOUS GRANTS	2,711.76	12,735.00	500,000.00	487,265.00	2.6
50-40-6236	RICO EXP - OPR GRANTS	.00	.00	12,000.00	12,000.00	.0
50-40-6237	POLICE DEPT EXP - OPR GRANTS	.00	.00	30,000.00	30,000.00	.0
50-40-6238	FIRE DEPT EXP - OPR GRANTS	.00	.00	67,500.00	67,500.00	.0
	TOTAL OPERATING GRANTS EXPENDITURE	147,415.96	170,284.97	724,500.00	554,215.03	23.5
	TOTAL FUND EXPENDITURES	147,415.96	170,284.97	724,500.00	554,215.03	23.5
	NET REVENUE OVER EXPENDITURES	(147,415.96)	(170,284.97)	.00	170,284.97	.0

TOWN OF JEROME
BALANCE SHEET
OCTOBER 31, 2026

CAPITAL GRANTS FUND

	ASSETS			
60-00-1000	CASH - COMBINED FUND		824,680.31	
60-00-1120	CAP GRANTS RECEIVABLE		(29,260.56)	
	TOTAL ASSETS			795,419.75
	LIABILITIES AND EQUITY			
	LIABILITIES			
60-00-2755	DEFERRED REVENUE - CAP GRANTS		737,132.33	
	TOTAL LIABILITIES			737,132.33
	FUND EQUITY			
60-00-3001	RESTRICTED FUND BALANCE		291,647.29	
60-00-3002	UNRESTRICTED FUND BALANCE		(154,326.34)	
	REVENUE OVER EXPENDITURES - YTD	(79,033.53)		
	BALANCE - CURRENT DATE		(79,033.53)	
	TOTAL FUND EQUITY			58,287.42
	TOTAL LIABILITIES AND EQUITY			795,419.75

TOWN OF JEROME
REVENUES WITH COMPARISON TO BUDGET
FOR THE 4 MONTHS ENDING OCTOBER 31, 2026

CAPITAL GRANTS FUND

		PERIOD ACTUAL	YTD ACTUAL	BUDGET	UNEARNED	PCNT
	CAPITAL GRANTS REVENUE					
60-70-4105	CDBG DECEPTIOWATERLINE REVENUE	362,164.22	362,164.22	200,000.00	(162,164.22)	181.1
60-70-4107	YAVAPAI APACHE GAMING DONATION	.00	.00	10,500.00	10,500.00	.0
60-70-4108	FREEPORT MCMORAN - SOCIAL INVE	.00	.00	25,000.00	25,000.00	.0
60-70-4109	BROWNFIELDS GRANT:HOTEL JEROME	.00	.00	1,000,000.00	1,000,000.00	.0
60-70-4111	GRANTS-CENTER AVE	.00	.00	3,000,000.00	3,000,000.00	.0
60-70-4112	CONGRESSIONAL FUNDING	.00	.00	2,500,000.00	2,500,000.00	.0
60-70-4113	WIFA GRANT-MESCAL SCHOOL	18,023.75	18,723.75	800,000.00	781,276.25	2.3
60-70-4114	WIFA GRANT VERDE CENTRAL & DEC	11,750.00	12,470.00	1,250,000.00	1,237,530.00	1.0
60-70-4185	MISCELLANEOUS CAPITAL GRANTS	.00	.00	3,500,000.00	3,500,000.00	.0
60-70-4200	FEDERAL GRANTS	.00	.00	3,500,000.00	3,500,000.00	.0
	TOTAL CAPITAL GRANTS REVENUE	391,937.97	393,357.97	15,785,500.00	15,392,142.03	2.5
	TOTAL FUND REVENUE	391,937.97	393,357.97	15,785,500.00	15,392,142.03	2.5

TOWN OF JEROME
EXPENDITURES WITH COMPARISON TO BUDGET
FOR THE 4 MONTHS ENDING OCTOBER 31, 2026

CAPITAL GRANTS FUND

		PERIOD ACTUAL	YTD ACTUAL	BUDGET	UNEXPENDED	PCNT
	CAPITAL GRANTS EXPENDITURE					
60-70-6105	CDBG DECEPTIWATERLINE EXPENSES	12,697.50	424,962.75	200,000.00	(224,962.75)	212.5
60-70-6107	YAVAPAI APACHE GRANT EXPENSES	.00	.00	10,500.00	10,500.00	.0
60-70-6108	FREEPORT MCMORAN - SOCIAL INVE	.00	.00	25,000.00	25,000.00	.0
60-70-6109	BROWNFIELDS GRANT:HOTEL JEROME	.00	.00	1,000,000.00	1,000,000.00	.0
60-70-6111	GRANT- CENTERAVE	.00	.00	3,000,000.00	3,000,000.00	.0
60-70-6112	CONGRESSIONAL FUNDING	.00	.00	2,500,000.00	2,500,000.00	.0
60-70-6113	WIFA GRANT EXP-MESCAL SCHOOL	6,600.00	26,023.75	800,000.00	773,976.25	3.3
60-70-6114	WIFA GRANT VERDE CENTRAL & DEC	8,155.00	21,405.00	1,250,000.00	1,228,595.00	1.7
60-70-6185	MISC EXP - CAP GRANTS	.00	.00	3,500,000.00	3,500,000.00	.0
60-70-6200	FEDERAL GRANT EXP	.00	.00	3,500,000.00	3,500,000.00	.0
	TOTAL CAPITAL GRANTS EXPENDITURE	27,452.50	472,391.50	15,785,500.00	15,313,108.50	3.0
	TOTAL FUND EXPENDITURES	27,452.50	472,391.50	15,785,500.00	15,313,108.50	3.0
	NET REVENUE OVER EXPENDITURES	364,485.47	(79,033.53)	.00	79,033.53	.0

TOWN OF JEROME
BALANCE SHEET
OCTOBER 31, 2026

GENERAL FUND CONTINGENCIES FND

	ASSETS		
70-00-1000	CASH - COMBINED FUND	(316,932.97)	
	TOTAL ASSETS		(316,932.97)
	LIABILITIES AND EQUITY		
	FUND EQUITY		
70-00-3002	UNRESTRICTED FUND BALANCE	(316,932.97)	
	TOTAL FUND EQUITY		(316,932.97)
	TOTAL LIABILITIES AND EQUITY		(316,932.97)

TOWN OF JEROME
REVENUES WITH COMPARISON TO BUDGET
FOR THE 4 MONTHS ENDING OCTOBER 31, 2026

GENERAL FUND CONTINGENCIES FND

		PERIOD ACTUAL	YTD ACTUAL	BUDGET	UNEARNED	PCNT
	GENERAL FUND CONTINGENCIES REV					
70-25-4090	WILDLANDS REV - CONTINGENCY	.00	.00	75,000.00	75,000.00	.0
70-25-4295	EXCESS SALES TAX- MISC	.00	.00	2,350,000.00	2,350,000.00	.0
	TOTAL GENERAL FUND CONTINGENCIES RE	.00	.00	2,425,000.00	2,425,000.00	.0
	TOTAL FUND REVENUE	.00	.00	2,425,000.00	2,425,000.00	.0

TOWN OF JEROME
EXPENDITURES WITH COMPARISON TO BUDGET
FOR THE 4 MONTHS ENDING OCTOBER 31, 2026

GENERAL FUND CONTINGENCIES FND

		PERIOD ACTUAL	YTD ACTUAL	BUDGET	UNEXPENDED	PCNT
	GNERLA FUND CONTINGENCIES EXP					
70-25-6276	WILDLANDS EXP - CONTINGENCY	.00	.00	75,000.00	75,000.00	.0
70-25-6295	EXPENSE - GF CONTINGENCIES	.00	.00	2,350,000.00	2,350,000.00	.0
	TOTAL GNERLA FUND CONTINGENCIES EXP	.00	.00	2,425,000.00	2,425,000.00	.0
	TOTAL FUND EXPENDITURES	.00	.00	2,425,000.00	2,425,000.00	.0
	NET REVENUE OVER EXPENDITURES	.00	.00	.00	.00	.0

TOWN OF JEROME
BALANCE SHEET
OCTOBER 31, 2026

UTILITIES CONTINGENCIES FUND

	ASSETS		
80-00-1000	CASH - COMBINED FUND	75,480.48	
	TOTAL ASSETS		75,480.48
	LIABILITIES AND EQUITY		
	FUND EQUITY		
80-00-3002	ENDING FUND BALANCE	75,480.48	
	TOTAL FUND EQUITY		75,480.48
	TOTAL LIABILITIES AND EQUITY		75,480.48

TOWN OF JEROME
BALANCE SHEET
OCTOBER 31, 2026

CAPITAL FUND

	ASSETS			
90-00-1000	CASH - COMBINED FUND		(47,794.14)	
90-00-1021	OAZ CAPITAL IMPROVEMENTS		74,620.31	
90-00-1023	ONEAZ WWTP CHECKING		2.26	
	TOTAL ASSETS			26,828.43
	LIABILITIES AND EQUITY			
	FUND EQUITY			
90-00-3002	UNRESTRICTED FUND BALANCE		27,352.77	
	REVENUE OVER EXPENDITURES - YTD	(524.34)		
	BALANCE - CURRENT DATE		(524.34)	
	TOTAL FUND EQUITY			26,828.43
	TOTAL LIABILITIES AND EQUITY			26,828.43

TOWN OF JEROME
REVENUES WITH COMPARISON TO BUDGET
FOR THE 4 MONTHS ENDING OCTOBER 31, 2026

CAPITAL FUND

		PERIOD ACTUAL	YTD ACTUAL	BUDGET	UNEARNED	PCNT
	CAPITAL FUND REVENUES					
90-57-4300	BANK INTEREST - CAPITAL FUND	135.42	535.66	.00	(535.66)	.0
90-57-4515	INTERIM WWTP LOAN	.00	.00	801,250.00	801,250.00	.0
	TOTAL CAPITAL FUND REVENUES	135.42	535.66	801,250.00	800,714.34	.1
	TOTAL FUND REVENUE	135.42	535.66	801,250.00	800,714.34	.1

TOWN OF JEROME
EXPENDITURES WITH COMPARISON TO BUDGET
FOR THE 4 MONTHS ENDING OCTOBER 31, 2026

CAPITAL FUND

		PERIOD ACTUAL	YTD ACTUAL	BUDGET	UNEXPENDED	PCNT
	CAPITAL FUND EXPENDITURES					
90-57-7030	INTERIM WWTP LOAN EXP	.00	1,060.00	801,250.00	800,190.00	.1
	TOTAL CAPITAL FUND EXPENDITURES	.00	1,060.00	801,250.00	800,190.00	.1
	TOTAL FUND EXPENDITURES	.00	1,060.00	801,250.00	800,190.00	.1
	NET REVENUE OVER EXPENDITURES	135.42	(524.34)	.00	524.34	.0

Report Criteria:
Detail report type printed

Vendor Number	Name	Invoice Number	Description	Seq	Invoice Date	Invoice Amount	Discount Amount	Check Amount	Check Number	Check Issue Date
1015	ADEQ	101426KM1	INV. 456804X MAP Monitor	1	10/14/2026	1,939.34	.00	1,939.34	103304	10/14/2026
		101426KM1	INV. 457682X WQL Water	2	10/14/2026	2,943.39	.00	2,943.39	103304	10/14/2026
		101426KM1	INV. 457991X WQL Water	3	10/14/2026	377.70	.00	377.70	103304	10/14/2026
Total 1015:						5,260.43	.00	5,260.43		
1031	ALL-MED EQUIPMENT &	102126KM1	Inv. 869324 Monthly Tank	1	10/21/2026	96.00	.00	96.00	103318	10/21/2026
Total 1031:						96.00	.00	96.00		
1050	APS	100726KM3	Acct 3601574879 Park Pan	1	10/07/2026	60.95	.00	60.95	103280	10/07/2026
		100726KM3	Acct 4533627223 Restroo	2	10/07/2026	55.16	.00	55.16	103280	10/07/2026
		100726KM3	Acct 9438060000 Hull Roof	3	10/07/2026	17.35	.00	17.35	103280	10/07/2026
		102826KM1	Acct 1490440000 Street Li	1	10/28/2026	1,265.13	.00	1,265.13	103342	10/28/2026
Total 1050:						1,398.59	.00	1,398.59		
1056	ARIZONA BUG COMPANY	102826KM2	Inv. 35866 Pest Control Fir	1	10/28/2026	50.00	.00	50.00	103343	10/28/2026
		102826KM2	Inv. 36689 Pest Control 62	2	10/28/2026	100.00	.00	100.00	103343	10/28/2026
Total 1056:						150.00	.00	150.00		
1088	AT&T	100726KM5	Acct 287307080989 - Parki	1	10/07/2026	41.74	.00	41.74	103282	10/07/2026
		100726KM5	Acct 287307080989 Phone	2	10/07/2026	41.74	.00	41.74	103282	10/07/2026
Total 1088:						83.48	.00	83.48		
1178	CENTURY LINK	100726KM6	ACCT 333832741 Phone S	1	10/07/2026	73.94	.00	73.94	103284	10/07/2026
		100726KM6	ACCT 333832741 Phone S	2	10/07/2026	166.25	.00	166.25	103284	10/07/2026
		100726KM6	ACCT 333832741 Phone S	3	10/07/2026	265.99	.00	265.99	103284	10/07/2026
		100726KM6	ACCT 333832741 Phone S	4	10/07/2026	166.25	.00	166.25	103284	10/07/2026
		100726KM6	ACCT 333832741 Phone S	5	10/07/2026	66.50	.00	66.50	103284	10/07/2026
		102126KM2	ACCT 88707005 Phone-Lo	1	10/21/2026	4.31	.00	4.31	103319	10/21/2026
		102826KM3	ACCT 333832741 Phone S	1	10/28/2026	74.74	.00	74.74	103344	10/28/2026
		102826KM3	ACCT 333832741 Phone S	2	10/28/2026	167.98	.00	167.98	103344	10/28/2026
		102826KM3	ACCT 333832741 Phone S	3	10/28/2026	167.98	.00	167.98	103344	10/28/2026
		102826KM3	ACCT 333832741 Phone S	4	10/28/2026	268.76	.00	268.76	103344	10/28/2026
		102826KM3	ACCT 333832741 Phone S	5	10/28/2026	67.19	.00	67.19	103344	10/28/2026
Total 1178:						1,489.89	.00	1,489.89		
1195	CITY OF COTTONWOOD	102126KM3	Inv. 0011538 Dispatching S	1	10/21/2026	4,228.43	.00	4,228.43	103320	10/21/2026
		102126KM3	Inv. 0011538 Dispatching S	2	10/21/2026	751.00	.00	751.00	103320	10/21/2026
Total 1195:						4,979.43	.00	4,979.43		
1213	CONTRACT WASTEWATE	100726KM7	Inv. 1016743 September W	1	10/07/2026	1,275.00	.00	1,275.00	103285	10/07/2026
		100726KM7	Inv. 1016743 September W	2	10/07/2026	3,875.00	.00	3,875.00	103285	10/07/2026
		100726KM7	Inv. 1016743 September S	3	10/07/2026	150.00	.00	150.00	103285	10/07/2026
Total 1213:						5,300.00	.00	5,300.00		
1239	Core & Main	100726KM8	INV. Z612529 Water Parts f	1	10/07/2026	325.99	.00	325.99	103286	10/07/2026
		100726KM8	INV. Z263795 Deception G	2	10/07/2026	82.44-	.00	82.44-	103286	10/07/2026

Vendor Number	Name	Invoice Number	Description	Seq	Invoice Date	Invoice Amount	Discount Amount	Check Amount	Check Number	Check Issue Date
		102826KM4	INV. Z864926 3/4 Inch IP S	1	10/28/2026	213.70	.00	213.70	103345	10/28/2026
Total 1239:						457.25	.00	457.25		
1264	DIESEL DIRECT WEST	100726KM9	INV. 87616103 September	1	10/07/2026	290.62	.00	290.62	103287	10/07/2026
		100726KM9	INV. 87616103 September	2	10/07/2026	36.33	.00	36.33	103287	10/07/2026
		100726KM9	INV. 87616103 September	3	10/07/2026	36.33	.00	36.33	103287	10/07/2026
		102126KM4	INV. 87656668 Cust. 1858	1	10/21/2026	258.25	.00	258.25	103321	10/21/2026
		102126KM4	INV. 87656668 Cust. 1858	2	10/21/2026	32.28	.00	32.28	103321	10/21/2026
		102126KM4	INV. 87656668 Cust. 1858	3	10/21/2026	32.28	.00	32.28	103321	10/21/2026
Total 1264:						686.09	.00	686.09		
1322	FOUR-D LLC	100726KM10	Inv. 973 IT Work for Town	1	10/07/2026	412.50	.00	412.50	103288	10/07/2026
		100726KM10	Inv. 973 IT Work for PD-Se	2	10/07/2026	225.00	.00	225.00	103288	10/07/2026
Total 1322:						637.50	.00	637.50		
1380	HUGHES SUPPLY	102126KM5	INV. S182070249.001 Prim	1	10/21/2026	74.48	.00	74.48	103322	10/21/2026
Total 1380:						74.48	.00	74.48		
1392	INFINITY UNIFORMS	101426KM2	Inv. 092826 Body Armor for	1	10/14/2026	1,574.95	.00	1,574.95	103305	10/14/2026
Total 1392:						1,574.95	.00	1,574.95		
1419	JC CULLEN INC	100726KM12	Inv. 161639 911 Port Servic	1	10/07/2026	34.57	.00	34.57	103290	10/07/2026
		100726KM12	Inv. 161639 911 Port Servic	2	10/07/2026	34.56	.00	34.56	103290	10/07/2026
Total 1419:						69.13	.00	69.13		
1503	LEGEND	100726KM13	Inv. 2616818 Testing on 9-	1	10/07/2026	75.00	.00	75.00	103291	10/07/2026
		100726KM13	Inv. 2617426 Testing on 9-	2	10/07/2026	75.00	.00	75.00	103291	10/07/2026
		102126KM7	Inv. 2618052 Testing on Oc	1	10/21/2026	75.00	.00	75.00	103324	10/21/2026
		102826KM6	Inv. 2615047 Testing Servic	1	10/28/2026	75.00	.00	75.00	103347	10/28/2026
		102826KM6	Inv. 2618443 Testing Servic	2	10/28/2026	515.40	.00	515.40	103347	10/28/2026
		102826KM6	Inv. 2618443 Sink 10-8-26	3	10/28/2026	15.00	.00	15.00	103347	10/28/2026
Total 1503:						830.40	.00	830.40		
1574	NACOG	100126KM1	Inv. 4-CDBG Grant Admin f	1	10/01/2026	9,000.00	.00	9,000.00	103276	10/01/2026
Total 1574:						9,000.00	.00	9,000.00		
1576	NAPA AUTO PARTS	100726KM15	Inv. 416861 & 417104 Wat	1	10/07/2026	25.09	.00	25.09	103293	10/07/2026
		100726KM15	Inv. 416861 & 417104 Wat	2	10/07/2026	25.09	.00	25.09	103293	10/07/2026
		100726KM15	Inv. 416861 & 417104 Wat	3	10/07/2026	25.09	.00	25.09	103293	10/07/2026
		100726KM15	Inv. 416861 & 417104 Wat	4	10/07/2026	25.09	.00	25.09	103293	10/07/2026
		100726KM15	Inv. 416861 & 417104 Wat	5	10/07/2026	25.09	.00	25.09	103293	10/07/2026
		100726KM15	Inv. 416861 & 417104 Wat	6	10/07/2026	25.10	.00	25.10	103293	10/07/2026
Total 1576:						150.55	.00	150.55		
1578	NATIONAL LEAGUE OF CI	102826KM8	INV. 198880 Member 0000	1	10/28/2026	328.00	.00	328.00	103349	10/28/2026
Total 1578:						328.00	.00	328.00		

Vendor Number	Name	Invoice Number	Description	Seq	Invoice Date	Invoice Amount	Discount Amount	Check Amount	Check Number	Check Issue Date
1584	NEXTCARE URGENT CA	102826KM9	Inv. 10-12-2026 Acct. 0010	1	10/28/2026	18.50	.00	18.50	103350	10/28/2026
		102826KM9	Inv. 10-12-2026 Acct. 0010	2	10/28/2026	18.50	.00	18.50	103350	10/28/2026
		102826KM9	Inv. 10-12-2026 Acct. 0010	3	10/28/2026	18.50	.00	18.50	103350	10/28/2026
		102826KM9	Inv. 10-12-2026 Acct. 0010	4	10/28/2026	18.50	.00	18.50	103350	10/28/2026
		102826KM9	Inv. 10-12-2026 Acct. 0010	5	10/28/2026	18.50	.00	18.50	103350	10/28/2026
		102826KM9	Inv. 10-12-2026 Acct. 0010	6	10/28/2026	18.50	.00	18.50	103350	10/28/2026
Total 1584:						111.00	.00	111.00		
1603	ODP BUSINESS SOLUTIO	100726KM16	Inv. 483398918001 PD Ton	1	10/07/2026	583.92	.00	583.92	103294	10/07/2026
		100726KM16	Inv. 482990554001 Paper	2	10/07/2026	147.47	.00	147.47	103294	10/07/2026
		101426KM3	Inv. 484347911001 Chairs f	1	10/14/2026	395.44	.00	395.44	103306	10/14/2026
		102826KM10	Inv. 485825321001 Mints	1	10/28/2026	21.72	.00	21.72	103351	10/28/2026
Total 1603:						1,148.55	.00	1,148.55		
1637	POSTMASTER	101426KM4	Bulk Postage for Novembe	1	10/14/2026	99.59	.00	99.59	103307	10/14/2026
Total 1637:						99.59	.00	99.59		
1643	PRESCOTT LAW GROUP,	100726KM17	INV. 11170 Prosecutor Serv	1	10/07/2026	2,000.00	.00	2,000.00	103295	10/07/2026
Total 1643:						2,000.00	.00	2,000.00		
1728	SEDONA RECYCLES, INC	101426KM6	INV. JRME926 Tipping Fee	1	10/14/2026	245.00	.00	245.00	103309	10/14/2026
Total 1728:						245.00	.00	245.00		
1735	SHAW LAW FIRM, PLLC	102826KM11	Inv. 29388 S V. F CM2025-	1	10/28/2026	585.00	.00	585.00	103352	10/28/2026
		102826KM11	Inv. 29389 S V. F CM2026-	2	10/28/2026	607.50	.00	607.50	103352	10/28/2026
		102826KM11	Inv. 29390 S. V. L TR2026-	3	10/28/2026	37.50	.00	37.50	103352	10/28/2026
		102826KM11	Inv. 29392 S V. K TR2026-	4	10/28/2026	600.00	.00	600.00	103352	10/28/2026
		102826KM11	Inv. 29393 S V. S TR2026-	5	10/28/2026	600.00	.00	600.00	103352	10/28/2026
Total 1735:						2,430.00	.00	2,430.00		
1751	SOUTHWESTERN ENVIR	100726KM25	Inv. 2026-421 Deception W	1	10/07/2026	3,697.50	.00	3,697.50	103296	10/07/2026
		100726KM25	Inv. 2026-422 Mescal Siph	2	10/07/2026	6,600.00	.00	6,600.00	103296	10/07/2026
		100726KM25	Inv. 2026-423 WIFA Verde	3	10/07/2026	8,155.00	.00	8,155.00	103296	10/07/2026
Total 1751:						18,452.50	.00	18,452.50		
1774	SUPERIOR COURT YAVA	102126KM9	Inv. Q1-27-J Pro-Tem Wee	1	10/21/2026	496.96	.00	496.96	103326	10/21/2026
Total 1774:						496.96	.00	496.96		
1812	TOWN OF JEROME - UTIL	100726KM21	Acct 7015.01 - Town Utilitie	1	10/07/2026	249.74	.00	249.74	103300	10/07/2026
		100726KM21	Acct 7054.01 - Town Utilitie	2	10/07/2026	179.91	.00	179.91	103300	10/07/2026
		100726KM21	Acct 7060.01 - Town Utilitie	3	10/07/2026	249.74	.00	249.74	103300	10/07/2026
		100726KM21	Acct 7002.01 - Town Utilitie	4	10/07/2026	264.51	.00	264.51	103300	10/07/2026
Total 1812:						943.90	.00	943.90		
1813	TOWN OF JEROME PR	100626MS1	Payroll Transfer for PPE 10	1	10/06/2026	90,000.00	.00	90,000.00	103278	10/06/2026
		101426KM9	Payroll Transfer for PPE 10	1	10/14/2026	90,000.00	.00	90,000.00	103312	10/14/2026
		102826KM12	Payroll Transfer 1 for Nove	1	10/28/2026	90,000.00	.00	90,000.00	103353	10/28/2026

Vendor Number	Name	Invoice Number	Description	Seq	Invoice Date	Invoice Amount	Discount Amount	Check Amount	Check Number	Check Issue Date
Total 1813:						270,000.00	.00	270,000.00		
1827	UNISOURCE ENERGY SE	101426KM10	Acct. 4353340000 Town Ya	1	10/14/2026	30.22	.00	30.22	103313	10/14/2026
		101426KM10	Acct. 0559820000 Town Ya	2	10/14/2026	41.35	.00	41.35	103313	10/14/2026
		101426KM10	Acct. 7505930000 Civic Ce	3	10/14/2026	42.20	.00	42.20	103313	10/14/2026
		101426KM10	Acct. 6937260000 Police D	4	10/14/2026	30.82	.00	30.82	103313	10/14/2026
		101426KM10	Acct. 2353340000 Co-op	5	10/14/2026	30.82	.00	30.82	103313	10/14/2026
Total 1827:						175.41	.00	175.41		
1851	VERDE VALLEY HARDWA	101426KM11	Ref. 93390 Cones	1	10/14/2026	125.36	.00	125.36	103314	10/14/2026
		101426KM11	Ref. 93467 Couplings	2	10/14/2026	89.91	.00	89.91	103314	10/14/2026
		101426KM11	Ref. 93475 Light Bulbs	3	10/14/2026	23.04	.00	23.04	103314	10/14/2026
		101426KM11	Ref. 93750 Degreaser	4	10/14/2026	21.95	.00	21.95	103314	10/14/2026
		101426KM11	Ref. 94094 Canopy & Bulb	5	10/14/2026	244.37	.00	244.37	103314	10/14/2026
Total 1851:						504.63	.00	504.63		
1859	VERIZON WIRELESS	100726KM22	Acct 870476021-00001 FY	1	10/07/2026	37.87	.00	37.87	103301	10/07/2026
		100726KM22	Acct 870476021-00001 FY	2	10/07/2026	37.87	.00	37.87	103301	10/07/2026
		100726KM22	Acct 870476021-00002 FY	3	10/07/2026	49.97	.00	49.97	103301	10/07/2026
		100726KM22	Acct 870476021-00003 PD	4	10/07/2026	310.28	.00	310.28	103301	10/07/2026
		100726KM22	Acct 870476021-00003 FY	5	10/07/2026	197.91	.00	197.91	103301	10/07/2026
		100726KM22	Acct 870476021-00003 FY	6	10/07/2026	37.87	.00	37.87	103301	10/07/2026
Total 1859:						671.77	.00	671.77		
1903	WM CORPORATE SERVI	100726KM24	Inv. 926-4655-3 Cust. 30-5	1	10/07/2026	2,208.32	.00	2,208.32	103303	10/07/2026
Total 1903:						2,208.32	.00	2,208.32		
1914	YAVAPAI CO. EDUCATION	101426KM12	Inv. 26-1110 Internet Acces	1	10/14/2026	503.00	.00	503.00	103315	10/14/2026
		101426KM12	Inv. 26-1110 Internet Acces	2	10/14/2026	503.00	.00	503.00	103315	10/14/2026
		101426KM12	Inv. 26-1110 Internet Acces	3	10/14/2026	324.00	.00	324.00	103315	10/14/2026
		101426KM12	Inv. 26-1110 Internet Acces	4	10/14/2026	324.00	.00	324.00	103315	10/14/2026
		101426KM12	Inv. 26-1111 Library E-Rate	5	10/14/2026	24.00	.00	24.00	103315	10/14/2026
Total 1914:						1,678.00	.00	1,678.00		
1955	KRISTEN MUENZ	102126KM6	Reimbursement for Gift Ca	1	10/21/2026	155.25	.00	155.25	103323	10/21/2026
Total 1955:						155.25	.00	155.25		
1956	MARTIN MARIETTA	100726KM14	Inv. 50726243 Mag ABC	1	10/07/2026	95.99	.00	95.99	103292	10/07/2026
		102126KM8	Inv. 50874340 Sand	1	10/21/2026	323.99	.00	323.99	103325	10/21/2026
Total 1956:						419.98	.00	419.98		
1961	THE REINALT-THOMAS C	100126KM2	Inv. 5086627341 Installatio	1	10/01/2026	96.00	.00	96.00	103277	10/01/2026
		100126KM2	Inv. 5089927341 Tires for P	2	10/01/2026	1,177.87	.00	1,177.87	103277	10/01/2026
		101426KM8	Inv. 5092632912 Mount Tir	1	10/14/2026	40.00	.00	40.00	103311	10/14/2026
Total 1961:						1,313.87	.00	1,313.87		
1974	MOYER'S HEATING & CO	102826KM7	INV. 0000139385 621 Main	1	10/28/2026	450.00	.00	450.00	103348	10/28/2026
		102826KM7	INV. 0000139486 621 Main	2	10/28/2026	333.54	.00	333.54	103348	10/28/2026

Vendor Number	Name	Invoice Number	Description	Seq	Invoice Date	Invoice Amount	Discount Amount	Check Amount	Check Number	Check Issue Date
		102826KM7	INV. 0000139451 600 Clar	3	10/28/2026	250.00	.00	250.00	103348	10/28/2026
		102826KM7	INV. 0000138598 600 Clar	4	10/28/2026	210.00	.00	210.00	103348	10/28/2026
Total 1974:						1,243.54	.00	1,243.54		
1984	AZ Municipal Risk Retentio	100726KM2	Q3 Payroll Workers Comp	1	10/07/2026	126.27	.00	126.27	103283	10/07/2026
		100726KM2	Q3 Payroll Workers Comp	2	10/07/2026	14.55	.00	14.55	103283	10/07/2026
		100726KM2	Q3 Payroll Workers Comp	3	10/07/2026	2,345.66	.00	2,345.66	103283	10/07/2026
		100726KM2	Q3 Payroll Workers Comp	4	10/07/2026	1,720.69	.00	1,720.69	103283	10/07/2026
		100726KM2	Q3 Payroll Workers Comp	5	10/07/2026	26.77	.00	26.77	103283	10/07/2026
		100726KM2	Q3 Payroll Workers Comp	6	10/07/2026	37.24	.00	37.24	103283	10/07/2026
		100726KM2	Q3 Payroll Workers Comp	7	10/07/2026	28.51	.00	28.51	103283	10/07/2026
		100726KM2	Q3 Payroll Workers Comp	8	10/07/2026	160.61	.00	160.61	103283	10/07/2026
		100726KM2	Q3 Payroll Workers Comp	9	10/07/2026	379.40	.00	379.40	103283	10/07/2026
		100726KM2	Q3 Payroll Workers Comp	10	10/07/2026	192.03	.00	192.03	103283	10/07/2026
		100726KM2	Q3 Payroll Workers Comp	11	10/07/2026	538.84	.00	538.84	103283	10/07/2026
		100726KM2	Q3 Payroll Workers Comp	12	10/07/2026	157.70	.00	157.70	103283	10/07/2026
		100726KM2	Q3 Payroll Workers Comp	13	10/07/2026	90.78	.00	90.78	103283	10/07/2026
Total 1984:						5,819.05	.00	5,819.05		
1988	Helios Health	100726KM11	Inv. 1484 Drug Test & Phys	1	10/07/2026	245.00	.00	245.00	103289	10/07/2026
Total 1988:						245.00	.00	245.00		
2006	Wired Up Systems LLC	100726KM23	Inv. 142780 Com Video No	1	10/07/2026	112.94	.00	112.94	103302	10/07/2026
Total 2006:						112.94	.00	112.94		
2016	T2 SYSTEMS, INC.	100726KM20	INV. 148042 MobilePay Ga	1	10/07/2026	1,014.11	.00	1,014.11	103299	10/07/2026
		101426KM7	INV. 50023 Upsafety Verizo	1	10/14/2026	7,412.47	.00	7,412.47	103310	10/14/2026
		102126KM10	INV. 150141 Automated Lo	1	10/21/2026	102.50	.00	102.50	103327	10/21/2026
Total 2016:						8,529.08	.00	8,529.08		
2033	T2 Systems Canada Inc.	100726KM19	INV. 145537 Digital Iris Ser	1	10/07/2026	409.15	.00	409.15	103298	10/07/2026
Total 2033:						409.15	.00	409.15		
2047	ROBERT VEGA	101426KM5	Reimbursement for Pants	1	10/14/2026	6.66	.00	6.66	103308	10/14/2026
		101426KM5	Reimbursement for Pants	2	10/14/2026	6.67	.00	6.67	103308	10/14/2026
		101426KM5	Reimbursement for Pants	3	10/14/2026	6.66	.00	6.66	103308	10/14/2026
		101426KM5	Reimbursement for Pants	4	10/14/2026	6.66	.00	6.66	103308	10/14/2026
		101426KM5	Reimbursement for Pants	5	10/14/2026	6.67	.00	6.67	103308	10/14/2026
		101426KM5	Reimbursement for Pants	6	10/14/2026	6.66	.00	6.66	103308	10/14/2026
Total 2047:						39.98	.00	39.98		
2052	TERRI CARD	102126KM11	Reimburse for Halloween	1	10/21/2026	31.52	.00	31.52	103328	10/21/2026
Total 2052:						31.52	.00	31.52		
2063	STERICYCLE, INC	100726KM18	Inv. 8015562442 Customer	1	10/07/2026	344.68	.00	344.68	103297	10/07/2026
		100726KM18	Inv. 8015562442 Customer	2	10/07/2026	344.66	.00	344.66	103297	10/07/2026
		100726KM18	Inv. 8015562442 Customer	3	10/07/2026	344.66	.00	344.66	103297	10/07/2026
		100726KM18	Inv. 8015562442 Customer	4	10/07/2026	344.66	.00	344.66	103297	10/07/2026

Vendor Number	Name	Invoice Number	Description	Seq	Invoice Date	Invoice Amount	Discount Amount	Check Amount	Check Number	Check Issue Date
Total 2063:						1,378.66	.00	1,378.66		
2066	FLAGSTAFF BUSINESS S	102826KM5	Inv. 10222601 Polygraph fo	1	10/28/2026	300.00	.00	300.00	103346	10/28/2026
		102826KM5	Inv. 09022601 Polygraph fo	2	10/28/2026	300.00	.00	300.00	103346	10/28/2026
Total 2066:						600.00	.00	600.00		
2081	Arizona Elevator Solutions,	100726KM4	INV-54907-X5C5 Q2 Maint	1	10/07/2026	981.22	.00	981.22	103281	10/07/2026
Total 2081:						981.22	.00	981.22		
2126	The Planning Center	102126KM12	Inv. 4611 Planning Assistan	1	10/21/2026	2,316.22	.00	2,316.22	103329	10/21/2026
		102126KM12	Inv. 4611 Reimbursable Su	2	10/21/2026	395.54	.00	395.54	103329	10/21/2026
Total 2126:						2,711.76	.00	2,711.76		
2145	#1 Food Store	100726KM1	September Fuel-Police De	1	10/07/2026	249.37	.00	249.37	103279	10/07/2026
		100726KM1	September Fuel-Fire Dept.	2	10/07/2026	700.68	.00	700.68	103279	10/07/2026
		100726KM1	September Fuel-Joey & Va	3	10/07/2026	211.00	.00	211.00	103279	10/07/2026
		100726KM1	September Fuel-Properties	4	10/07/2026	237.38	.00	237.38	103279	10/07/2026
		100726KM1	September Fuel-PD Range	5	10/07/2026	34.67	.00	34.67	103279	10/07/2026
Total 2145:						1,433.10	.00	1,433.10		
2149	Rebecca Miller	101526MS1	Mileage Reimbursement -	1	10/15/2026	110.96	.00	110.96	103316	10/15/2026
Total 2149:						110.96	.00	110.96		
2150	Total Maintenance Erosion	101926KM1	Inv. 2025-108-101 Rev2 G	1	10/19/2026	111,581.87	.00	111,581.87	103317	10/19/2026
		101926KM1	Inv. 2025-108-102 Change	2	10/19/2026	42,980.60	.00	42,980.60	103317	10/19/2026
Total 2150:						154,562.47	.00	154,562.47		
Grand Totals:						513,829.33	.00	513,829.33		

Report Criteria:
Detail report type printed

File Attachments for Item:

A. Reports by the Town Manager / Clerk, Deputy Clerk, Utilities Clerk, Accounting Clerk, Public Works Director, Building Inspector, Library Director, Municipal Magistrate, Police Chief, Fire Chief and Council Members, Which in the Case of Council Member's Reports will be Limited to a Summary of Current Events and will Involve no Action

Council will consider and may approve the staff reports.

MONTHLY STAFF REPORT TO THE MAYOR AND COUNCIL

Brett Klein, Town Manager/Clerk

My activities have included:

- Conducted the HR onboarding of new PD employee Neal Gold.
- Issued a conditional offer of employment to a PW employee and the subsequent onboarding of the new employee, Alex Curtner.
- Finalized the zoning code updates and landscape design manual, and submitted for grant payment to the Sonoran Institute.
- Finalized the request for loading / unloading on the corner of Jerome and Main.
- Attended the Transportation Summit in Flagstaff, which is an informal requirement of our RPPL grant for Verde Avenue.
- Spent considerable time on grant closeout reports and documents for the Sonoran Institute's grant.
- Spent considerable time on the closeout requirements for the Deception Water Line project grant.
- Filed all closeout documents and final pay request for the Gulch Drainage project.
- Spent considerable time reviewing the WWTP contract between the Town and Fann and the certification of Owner's and Agency Concurrence.
- Began work on the attainment of easements for the Verde Central Syphon project.
- Started work on the FY 2028 budget by updating the CIP to the extent possible prior to the Council goal setting meeting.
- Worked on obtaining like for like proposal / quotations for a new ERP system.
- Spent considerable time dealing with volunteer FF and auxiliary issues.
- Participated in final training sessions for the conversion to an upgraded agenda management system.
- Submitted for grant reimbursements for seven of our ongoing grants. Managed our seven grant-funded projects.
- Completed the documentation for an 8th grant award through the Greater Arizona Development Authority for utility infrastructure mapping and planning.
- Conducted a follow-up utility coordination meeting with UES representatives for Verde Avenue construction.
- Met with our APS Account Manager about finally adjusting our streetlights and other concerns.
- Began work on a massive public record request.
- Started the process of replacement of IT services due to the retirement of our longtime partner / provider of IT services, Peter DeBlanc.

**** CONGRATULATIONS TO ****

Carlos Godina (Police Department) on completing 1 year of service effective November 16, 2026.

Tamara Lee (PD – Parking) on completing 6 years of service effective November 27, 2026.

Following is an accounting of sales tax revenues for September, and a recent water flow report.

TOWN OF JEROME, AZ

CITY SALES TAXES PER ADOR ONLINE REPORTS

SALES TAX REVENUES

	FY2026 Actual Funds Rec'd To-Date	FY2027 Actual - (based on DOR website)	Actual Funds Received Thus Far
July	11,933	104,898	75,183
August	145,492	85,127	134,766
September	190,314	73,825	195,469
October	295,632		
November	479,086		
December	537,409		
January	634,156		
February	779,019		
March	840,061		
April	991,633		
May	1,180,633		
June	1,303,411		
June - Late	1,309,044		
Total YTD	**1,309,044**	**263,850**	**75,183**

TOWN OF JEROME, AZ

Comparison of Restaurant/Bar, Accomodation and Retail Sales Tax Revenues

	RESTAURANTS/BARS (Bus Class 11)			ACCOMMODATION (Bus Class 44/144)			RETAIL (Bus Class 17)		
	FY2026 actual	FY 2027 Actual	+/- Compared to Last Yr	FY2026 actual	FY2027 actual	+/-	FY2026 actual	FY2027 actual	+/-
July	38302	37944	(358)	16719	14665	(2,054)	39902	35440	(4,462)
August	35053	34495	(558)	15495	13526	(1,969)	30560	26,438	(4,122)
September	38469	28,616	(9,853)	18570	11027.35	(7,543)	25196	24521	(675)
October	40220			17090			45030		
November	45587			25020			54553		
December	40137			16021			33812		
January	36643			15354			43836		
February	40291			15443			29130		
March	39051			16360			28280		
April	53934			22888			54546		
May	47188			19292			43382		
June	45329			18493			32525		
Total YTD	**500,204**	**101,055**		216,745	**39,218**		460,752	**86,399**	

Added 1% Bed Tax	Monthly total	**TOTAL TO DATE**
July	2,256	2,256
August	2,081	4,337
September	1,697	6,034
October		
November		
December		
January		
February		
March		
April		
May		
June		

WATER FLOWS REPORT

Reading Date		WALNUT GPM	VERDE GPM
2025	4-Aug	29	250
	11-Aug	32	245
	18-Aug	32	265
	25-Aug	36	265
	2-Sept	32	234
	8-Sept	36	255
	15-Sept	32	252
	22-Sept	36	258
	29-Sept	36	250
	6-Oct	36	265
	13-Oct	40	265
	20-Oct	40	248
	27-Oct	40	250
	3-Nov	40	240
	10-Nov	48	246
	17-Nov	40	255
	24-Nov	48	200
	1-Dec	44	165
	8-Dec	44	138
	15-Dec	40	230
	22-Dec	48	232
	29-Dec	36	180
2026	5-Jan	40	210
	12-Jan	40	184
	20-Jan	36	185
	26-Jan	40	161
	2-Feb	40	174
	9-Feb	39	180
	17-Feb	44	171
	23-Feb	44	177
	2-Mar	44	186
	9-Mar	36	180
	16-Mar	32	173
	23-Mar	36	170
	30-Mar	32	168
	6-April	32	175
	13-April	29	170
	20-April	29	170
	27-April	26	248
	4-May	26	250
	11-May	23	242
	18-May	23	233
	27-May	23	242
	1-June	21	240
	8-June	21	242
	15-June	21	238
	22-June	21	233
	29-June	18	221
	6-July	16	224
	13-July	16	222
	20-July	16	185
	27-July	9	98
	3-Aug	11	165
	10-Aug	11	250
	17-Aug	10	246
	24-Aug	10	248
	31-Aug	10	240
	8-Sept	10	235
	14-Sept	10	235
	21-Sept	10	220
	28-Sept	10	215
	5-Oct	10	213
	12-Oct	10	286
	19-Oct	10	233
	26-Oct	7	182
	2-Nov	36	371

TOWN OF JEROME, ARIZONA
POST OFFICE BOX 335, JEROME, ARIZONA 86331
(928) 634-7943 FAX (928) 634-0715

Founded 1876
Incorporated 1899

November 2026 Report for October 2026 by Kristen Muenz, Finance Director & Deputy Clerk

- Posted town notices and meeting agendas throughout the month at the three locations in town (Gulch Road, Post Office, Town Hall).

- Processed Payables, Payroll, New Employee Set-Up & Employee Modifications, Check & Cash Deposits, Journal Entries and Bank Reconciliation.

- Processed all License Applications & performed file updates and adjustments.

- Maintained files from FY's 2026 & 2027 per the Secretary of State's Retention Schedule, including filing documents in the long-term file room for safety.

- Performed property management tasks Including scheduling pest control to remove a wasp nest from the third floor of 600 Clark Street.

- Permits and Licensing activities for October:

Business Licenses

- 6 Businesses were sent renewal notices.
- 3 Businesses received 2nd reminders to renew, along with a $10 late fee.
- 8 Businesses sent in their renewal application, including 2 that were overdue.
- 3 Businesses applied for a NEW business license, 2 due to moving locations.
- 10 Business License renewals were issued.
- 27 Business Licenses are pending approval.
- Spreadsheet of Tour & Mobile Food Vendor License updates attached.

STR Licenses

- No new STR applications were received in October.
- No new STR/Vacation Rental Licenses were issued.
- 1 STR has been informed they are operating without a license.
- 16 Total STR Licenses are currently issued and/or active.
- 1 STR license is still in pending status.
- 1 STR owner informed us that they have a long-term tenant and to close their STR license as they will no longer be short-term renting.
- 4 STR licenses are still ACTIVE (license was approved and property has not changed hands) but the units are currently long-term or unused.
- A total of 22 dwelling units are currently used as licensed STRs.

In town	C	C	Name of FOOD VENDOR Business	TP	Business Type	Expires	App submitted	T	Scanned/ HC to Fire Insp.	Inspect FIRE	Inspect BUILD	Inspect ZONING	$ received	Payment Rcvd Y/N	Certificate to Manager	Color/Year	Issued	Late 1	Late 2	Late 3	Notes
0	V	25	Dog Town USA and Beyond	#	Food Truck	Sep	10/6/2026		NA	NA	NA	NA	10/6/2026	$20.00	10/6/2026	Grey	10/6/2026	0	0	0	Received COI, Health License & Fire Inspections 2026
0	E	24	Frosty Cauldron	#	Food Truck	Sep	1/0/1900		1/0/1900	0-Jan	0-Jan	0-Jan	1/0/1900	$0.00	9/24/2024	Beige	9/25/2025	0	0	0	Unsuspended in Feb-25/REVOKED 9-15-25
0	1	#	Mad Honey Food Truck	#	Food Truck	June	1/0/1900		1/0/1900	1/0/1900	1/0/1900	1/0/1900	1/0/1900	$0.00	9/9/2024	Beige	9/10/2024	0	0	0	Expired 6-2025-did not renew-Closing license 6-2026
0	E	#	Nora Jean's Koffee Koach	#	Food Truck	Sep	1/0/1900		1/0/1900	0-Jan	0-Jan	0-Jan	1/0/1900	$0.00	9/23/2025	Blue	23-Sep	X	0	0	Sending 2nd Reminder 2026

In town	C	C	Name of TOUR Business	TP	Business Type	Expires	App submitted	T	Scanned/ HC to Fire Insp.				$ received	Payment Rcvd Y/N	Certificate to Manager	Color/Year	Issued				Notes
0	1	#	Elevated Sedona Wine & Brew Tours	na	TOUR	May	5/27/2026		5/28/2026	1/0/1900	1/0/1900	1/0/1900	5/27/2026	$50.00	7/20/2026	Grey	7/20/2026	0	0	0	Tour Co- app. by Council 5-9-23 NEED NEW COI
x	2	#	Haunted Tours of Jerome	#	TOUR	June	7/14/2026		7/15/2026	CW	BW	WB	7/20/2026	$50.00	9/24/2026	Grey	9/24/2026	0	0	0	States no change to routes 2026
0	2	#	Wine Tours of Sedona	na	TOUR	June	8/13/2026	T	NA	NA	NA	NA	TBD	TBD	12/29/2025	Beige	12/29/2025	X	X	X	Did not complete renewal process, expired for over 90 days-Closing
0		TB	Ma & Pa Tours (Great West Tours)	#	TOUR	July	6/29/2026		7/15/2026	NA	NA	NA	7/14/2026	$20.00	7/15/2026	Grey	7/15/2026	0	0	0	Council Approval 7-14-26
x	1	20	Jerome Ghost Tours	#	TOUR	Dec	12/31/2025		1/6/2026	CW	BW	CW	12/31/2025	$50.00	5/5/2026	Gray	5-May	0	0	0	States the approved routes have not changed
0		N	US Ghost Adventures (new app)	#	TOUR	NA	9/8/2025		NA	NA	NA	NA	10/15/2025	$20.00	na	na	na	0	0	0	1st App denied-Jan 2025-No TPT/2nd App Denied 4/14/26
0	N	25	Capt. Ron's Magical Mystery Tour	#	TOUR	TBD	12/30/2024		na	NA	NA	NA	12/30/2024	X	TBD	TBD	TBD	0	0	0	Approved 1-14-25/Never recvd COI-CLOSING

KEY:
Current
Due to Renew or:
Monthly Activity
Pending
Expired
Closed or Denied
Food Truck
Tour Company
0=No OR No Data
X=Yes

TOWN OF JEROME, ARIZONA
POST OFFICE BOX 335, JEROME, ARIZONA 86331
(928) 634-7943

Founded 1876
Incorporated 1899

November 2026 Staff Report for October 2026 Activity
Submitted by Michele Sharif, Accounting Clerk/Administrative Specialist

- Took and Transcribed minutes for Regular October Council Meeting.
- Processed bank reconciliations in Caselle as needed to assist Finance Director.
- Monthly reconciliation of petty cash and cash drawer.
- Answered phones and assisted at office window as needed.
- Continued Upkeep/organization of both office and public bulletin boards.
- Download all batch reconciliation documentation from Xpress Bill Pay for October.
- Auction items re-listed: None – No Sales, Bids or Releases for October.
- Layout and draft new landscape guidelines manual.
- Completed collection of acknowledgements and signatures for updated and adopted Personnel Policy and Heat Illness Prevention Plan.
- Attended meeting with Atlas group regarding next steps for $1mil Brownfields Grant.
- Study for teaching AHA BLS for Provider class at Cottonwood VVMC.
- Compiled research and feedback from other municipalities regarding Springbrook and Tyler Technologies ERP systems – turned in results to T.M.
- Reviewed and submitted Application for Special Event – Steve Hopkins Celebration of Life
- Ported old Verizon numbers to new T-Mobile devices for JPD and JFD
- Assisted JFD with Prep for Halloween Dance and other organization.
- Confirmed JFD and JPD phone numbers no longer billing on Verizon account.
- Started IT Training with Four-D - Infosec training w/ Ida
- Began research on Gulch Ln. ROW information/historical data.
- Continued research for Anthony Lozano re: water letter 10 years prior (unable to locate document)

MONTHLY REVENUE REMITTANCE

Sep 2026

TOTAL DISBUR 16,576.00

SUBTOTALS:	**49.00**	**8,741.28**	**7,365.35**	**420.37**	
JCEF	**49.00**		6,863.95 Gen Fund		
FTG	**0.00**		501.40 Splits		

FUND	CODE	GL ACCT	OTH AGY	STATE	TOWN	COUNTY	
Jud Collect Enhan Fnd (Local TPF 12-116 - $7 Court)	ZJCL	4-13-03	49.00				
Jud Collect Enhan Fnd (LOCAL T22) (Other Fees)	ZJCLF	4-13-02					
Jud Collect Enhan Fnd (LOCAL T22) (Filing and Answer Fees)	ZJCLF	4-13-01					
Fill the Gap Revenue (MFTG)	FTGREV	4-98-03					*(S2 WRITE-IN)*
ADPS Forensic Fund	ZADPS	2-14-08		320.62			321.42 ZADPS & ZDNAS
Arson Detection Reward Fund - Title 22 Fees	ZADRF	2-13-05					0.00 ZADRF
Arson Detection Reward Fund	ZADRF	2-11-05					
Address Confidentiality Program Assmt 12-116.05	ZCAA1	2-15-33					0.00 ZCAA1, ZDVSF & ZTECH
Citz Clean Elect Fund (10% Base) - 16-949D, 954C (NOT Photo)	ZCEF	2-14-03		535.81			
Crim Jstc Enhnc Fnd Penalty (47% Base) - 12-116.01A, 41-2401	ZCJEF	2-14-01		2,251.28			
Child Passenger Restraint Fund 28-907C	ZCPRF	2-11-11					
Drug & Gang Enforcement Acct - 13-34xx, 13-811C	ZDECJ	2-11-25					
DNA 3% of Base Fine - 12-116.01C	ZDNAS	2-14-05		0.80			
DUI Abatement Fnd - 28-1304A, 1382,3 (Extrm DUI, $250)	ZDUIA	2-15-11					
DV Shelter Services Fund (DV Assmt) 12-116.06, 12-284.03A2	ZDVSF	2-15-34					*(S2 WRITE-IN)*
FARE Fee Special Collections (19%) AO 2003-126	ZFAR1	2-13-23		4.79			4.79 ZFAR 1 & 3
FARE Delinquency Fee ($35.00 Fee) AO 2003-126	ZFAR2	2-13-22					49.00 ZFAR 2 & 4
FARE Enhanced Spec Collection Fee	ZFAR3	2-13-25					
FARE Enhanced Deliquency Fee	ZFAR4	2-13-24		49.00			
FTG Penalty Assmt (7% of Base) - 12-116.01B, 41-2421J	ZFTGS	2-14-04		375.08			
Highway Users Rev Fnd (HURF) (REG 80% Out/ST Plates) 28-2533C	ZHRF3	2-11-36					
Jud Collect Enhan Fnd (ST TP - $11) 12-113, 12-116	ZJCS	2-13-52		77.00			91.00 ZJCS 52 & ZJCS 53
Jud Collect Enhan Fnd (ST TP - $2 PubDef Tmg) 12-116	ZJCS	2-13-53		14.00			
Jud Collect Enhan Fnd (CVLTP) Title 22-281C1 (18.39% of Fee)	ZJCSF	2-13-51					
Medical Srvs Enhan Fnd (13% Base) 12-116.02F, 36-2219.01	ZMSEF	2-14-02		696.52			
2011 Additional Assemt ($8) 12-116.04C	ZOS1	2-15-31		402.82			654.59 ZOS 1-99
Prison Construction & Operations Fnd 5-395.01A4, 41-1651	ZPCOF	2-15-13		1,000.00			
Law Enforcement Equipment Fund ARS41-1731	ZLEEF	2-15-49		185.31			
Probation Surcharge ($5) 12-114.01	ZPRSU/6/9	2-14-06		1,007.08			
Public Safety Equipment Fnd 5-395-397, 28-1381-88, 41-1723	ZPSEF	2-15-14		1,000.00			1,000.00 ZGFDU & ZPSEF
Drug Tech Registration Fnd (Drug lab) 13-3423, 28-737.....	ZTECH	2-15-35					
Victim Rights Penalty (2019 - $9) 12-116.08 (37.6%)	ZVCAF	2-15-43		170.11			452.95 ZVCAF & ZVRF
Victims Rights Enforcement Fund ($4) 12-116.09, 41-1722	ZVREA	2-15-37		194.83			
Victim Rights Penalty (2019 - $9) 12-116.08 (62.4%)	ZVRF	2-15-44		282.84			
Forfeited Overpayments		4-91-04					
Installment Payment Fee		4-39-08					
Attorney Reimbursement Fees (Indigent Defense)	**ZATT**	2-31-01			**300.00**		300.00 ZATT & ZPUBZ
Confidential Address Assmt - LOCAL DV/Sx (5%) 12-116.05	ZCAA2	4-29-22					
Court Enhancement Fee	**ZCE**	4-30-04					4,571.66 ZCAA2 & ZFINES
Defensive Driving School Fee 28-3396	ZDDS	4-31-01			230.00		
Default Fees - LOCAL	ZDEFF	4-32-01					0.00 ZDEFF & ZWARF
Deferred Prosecution Fees	ZDFEE	4-31-02			120.00		
Fines - CT Penalties - 13-811A & 28-1554B	ZFINE	4-21-10			932.29		
Fines - CR (NT) Penalties - 13-811A & 28-1554B	ZFINE	4-22-30			243.58		4,571.66 ALL ZFINES
Fines - CR T (DUI) Penalties - 13-811A & 28-1554B	ZFINE	4-22-10			1,636.88		
Fines - CR T (NDUI) Penalties - 13-811A & 28-1554B	ZFINE	4-22-20					
Fines - CR T (GBSE) Penalties - 13-811A & 28-1554B	ZFINE	4-21-95					
Fines - CR Penalties - 13-811A & 28-1554B	ZFINE	4-59-04					
Fines - LOCAL CIVIL TRAFFIC	ZFINE	4-49-07			2,691.20		
TITLE 22 OTHER FEES (LOCAL JCEF)	ZJCLF	4-13-02					
COURT SECURITY FEE	ZMCSF	4-30-25			1,010.00		
Miscellaneous (T22) Filing/Answer Fees 22-281C3	ZMISC	4-11-01					49.00 ZLCL & ZMISC
Miscellaneous (T22) Other Fees 22-281C3	ZMISC	4-11-02					
2011 Additional Assmt - Citing Agcy Share	ZOS	2-51-03					
Officer Safety Equip - LCOAL PD 12-116.04D	**ZOS3**	4-23-03			**201.40**		
2011 Additional Assmt - State Citing Agencies	ZOS5	2-15-32					
Non-Refundable Overpayments	ZOVF	4-91-02					
Public Defender Fees	**ZPUBZ**	4-39-71					*(S3 WRITE-IN)*
License Plate Violation (Susp/Dispay) 28-4139	ZSLPX/ZHRFC	4-23-02					
Warrant Fee	ZWARF	4-32-03					
Jail (incarceration) Fees	ZJF	4-33-21				370.00	
2011 Additional Assmt - Justice Courts Share	ZOS2	2-21-53				50.37	
CITIZENS CLEAN ELCTIONS FUND 1%	ZCEF2	2-14-09		53.39			589.20 ZCEF & ZCE

Alternate Dispute Resolution 12-135, 22-281C2, 12-284.03A5	ZADR					
Confidential Intermediary Fund 08-135, 12-284.03A8	ZCIF					
Drug & Gang Enforcement 12-284.03A1; 41-2402H	ZDGEF					
DUI, OUI Assmnt 12-1381.3 (Addl $500-$1500)	ZGFDU					
Forfeited Overpayments		4-91-04				
G&F Wildlife Theft Prevention Fund - 17-313A, 17-315	ZGF					
Officer Safety Equip - MVD/ADOT 12-116.04C	ZOS6					
Officer Safety Equip - JEROME PD						
Officer Safety Equip - US BID Yavapai Apache Ntn Tribal PD						
Registrar of Contractors 32-1107, 32-1166, 32-1124	ZRCA					
Suspended Plates (100%) 28-4139-FR	ZSLPC					
ZLCL OTHER CLERK FEES	ZLCL	4-39-09				
$20 First Responders Death Benefit	ZSSBF	2-15-47		120.00		

PASS-THROUGH MONIES:		Received	
OVERPAYMENT REPORT			
Carried Forward from Previous Month		$0.00	
RECEIVED in current month	ZOVR 2-72-01		(S5 WRITE-IN)
DISBURSED (Hold Rcpt Refund) in current month		$0.00	
Allocation Adjustments		$0.00	
Balance at End of Current Month			
UNAPPLIED PAYMENTS REPORT			
Carried Forward from Previous Month		$0.00	
Received, not applied this month	UAP 2-79-11	$162.00	(S5 WRITE-IN)
Allocated During Current month		$0.00	
Balance at End of Current Month		$162.00	
DEFERRED AGENCEY ALLOCATIONS REPORT			
Carried Forward from Previous Month		$0.00	
Agency Not Assigned in Current Month	DAA 2-99-02	$0.00	
Allocated During Current month		$0.00	
Balance at End of Current Month		$0.00	
BOND REPORT			
Carried Forward from previous month		$3,000.00	
RECEIVED in current month	ZBND 2-71-01		
CONVERTED (Exonerated) to Fines/Fees		$0.00	
DISBURSED in current month			
FORFEITED in current month		$0.00	
Balance at End of Current Month:		$3,000.00	
RESTITUTION REPORT			
Carried Forward from previous month		$0.00	
RECEIVED in current month	ZREST 2-41-01	$450.00	
DISBURSED in current month		$0.00	
Balance at End of Current Month		$450.00	

TOTAL REVENUE FOR DISBURSEMENT		$16,353.61
JCEF account	$49.00	
FTG account	$0.00	
State Revenue	$8,741.28	
City/Town	$7,365.35	
Yavapai County	$420.37	
Other Agencies		
TOTAL DISBURSEMENTS		$16,576.00
PASS-THROUGH MONIES:		$612.00
Overpayment Refunds	$0.00	
Unapplied Payments	$162.00	
Bonds (ZBND)	$0.00	
Restitution (ZREST)	$450.00	
Agency Not Assigned - not yet allocated	$0.00	
SABA TOTAL (Total Revenue)		$17,188.00

I, Chelsey Lennon, Court Clerk of Jerome Municipal Court, Yavapai County, State of Arizona, do hereby certify that the foregoing is a true and correct account of the funds collected by the Court for the month of: **September-26**

Signature

Second Verification:

Verified by:

Town Staff

JEROME MUNICIPAL COURT

CITY/TOWN DISBURSEMENT
46266

TOWN OF JEROME	CODE	GL	AMOUNT
Forfeited Overpayments		4-91-04	0.00
Confidential Address Assmt - LOCAL DV/Sx (5%) 12-116.05	ZCAA2	4-29-22	0.00
Defensive Driving School Fee 28-3396	ZDDS	4-31-01	230.00
Default Fees - LOCAL	ZDEFF	4-32-01	0.00
Deferred Prosecution Fees	ZDFEE	4-31-02	120.00
Fines - CT Penalties - 13-811A & 28-1554B	ZFINE	4-21-10	932.29
Fines - CR (NT) Penalties - 13-811A & 28-1554B	ZFINE	4-22-30	243.58
Fines - CR T (DUI) Penalties - 13-811A & 28-1554B	ZFINE	4-22-10	1,636.88
Fines - CR T (NDUI) Penalties - 13-811A & 28-1554B	ZFINE	4-22-20	0.00
Fines - CR T (GBSE) Penalties - 13-811A & 28-1554B	ZFINE	4-21-95	0.00
Fines - CR Penalties - 13-811A & 28-1554B	ZFINE	4-59-04	0.00
Fines - LOCAL CIVIL TRAFFIC	ZFINE	4-49-07	2,691.20
TITLE 22 OTHER FEES (LOCAL JCEF)	ZJCLF	4-13-02	0.00
Jud Collect Enhan Fnd (LOCAL T22) (Other Fees)	ZJCLF	4-13-02	0.00
COURT SECURITY FEE	ZMCSF	4-30-25	1,010.00
Miscellaneous (T22) Filing/Answer Fees 22-281C3	ZMISC	4-11-01	0.00
Miscellaneous (T22) Other Fees 22-281C3	ZMISC	4-11-02	0.00
Non-Refundable Overpayments	ZOVF	4-91-02	0.00
License Plate Violation (Susp/Dispay) 28-4139	ZSLPX/ZHRFC	4-23-02	0.00
Warrant Fee	ZWARF	4-32-03	0.00
OTHER CLERK FEES	ZLCL	4-39-09	0.00

SUBTOTAL - City/Town, General Fund **$6,863.95**

Attorney Reimbursement Fees (Indigent Defense)	ZATT	2-31-01	300.00	
Public Defender Fees	ZPUBZ	4-39-71	0.00	
Court Enhancement Fee	ZCE	4-30-04		**0.00**
Officer Safety Equip - LCOAL PD 12-116.04D	ZOS3	4-23-03		**201.40**
2011 Additional Assmt - Citing Agcy Share	ZOS	2-51-03		**0.00**

SUBTOTAL - City/Town, Split Accounts **$501.40**

City/Town TOTAL: **$7,365.35**

SEPTEMBER 2026 $$$ RECONCILIATION

FOOTHILLS Bank - Jerome Municipal Court acct XXX-3419

beginning balance as of 9/1/2026	**$ 85,469.65**			
Deposits to account, per bank stmt:	**$ 15,549.00**	(SABA deposits in AJACS)		(money in transit)
		$	17,188.00	$1,639.00

Checks cleared & charge-back debits:	date cleared:			
#2454	9/8/2026		118.09	Yavapai County
#2457	9/11/2026	$	8,161.83	Town of Jerome
#2459	9/10/2026	$	68.86	Jerome JCEF
#2455	9/18/2026	$	7,077.10	State of Arizona
#2456	9/18/2026	$	65.27	Yavapai County
TOTAL:		**$**	**15,491.15**	

ending balance on 9/30/26: **$ 85,527.50**

Other Court Accounts: (closing balances as of current month's end)

JCEF	$12,648.97
Fill the Gap	$11,734.05

OFFICER SAFETY EQUIPMENT FUND - PD - Town Revenue (code# 4-23-03)

2024		2025	
		JAN	$ 123.56
JULY	$ 125.26	FEB	$ 69.38
AUG	$ 91.39	MAR	$ 187.59
SEPT	$ 123.13	APR	$ 124.65
OCT	$ 156.94	MAY	$ 97.47
NOV	$ 78.03	JUNE	$ 152.60
DEC	$ 58.18	**YTD (fiscal)**	$ 1,388.18

OFFICER SAFETY EQUIPMENT FUND - PD - Town Revenue (code# 4-23-03)

2025		2026	
		JAN	$ 98.01
JULY	$ 118.72	FEB	$ 131.36
AUG	$ 81.52	MAR	$ 104.84
SEPT	$ 98.67	APR	$ 127.83
OCT	$ 112.11	MAY	$ 125.34
NOV	$ 89.44	JUNE	$ 110.70
DEC	$ 59.31	**YTD (fiscal)**	$ 1,257.85

OFFICER SAFETY EQUIPMENT FUND - PD - Town Revenue (code# 4-23-03)

2026		2027	
		JAN	
JULY	$ 131.47	FEB	
AUG	$ 261.11	MAR	
SEPT	$ 201.40	APR	
OCT		MAY	
NOV		JUNE	
DEC		**YTD (fiscal)**	$ 593.98

2025-2026	Gross	ZOS3 4-23-03 off. safety equip.	ZMCSF 4-30-25 ct. security fee	ZSSBF - 02-15-47 1st responder fee	June - May NET to Town
July	$ 5,369.50	$ 118.72	$ 739.50		$ 4,511.28
August	$ 4,423.41	$ 81.52	$ 591.13		$ 3,750.76
Sept	$ 4,768.08	$ 98.67	$ 700.00		$ 3,969.41
October	$ 4,283.78	$ 112.11	$ 696.53		$ 3,475.14
November	$ 3,602.98	$ 89.44	$ 530.00		$ 2,983.54
December	$ 2,869.11	$ 59.31	$ 350.00		$ 2,459.80
2026					
January	$ 3,405.94	$ 98.01	$ 505.00	$ 26.67	$ 2,776.26
February	$ 4,351.90	$ 131.36	$ 700.00		$ 3,520.54
March	$ 5,161.91	$ 104.84	$ 775.00		$ 4,282.07
April	$ 4,688.27	$ 127.83	$ 825.98		$ 3,734.46
May	$ 5,195.98	$ 125.34	$ 715.86		$ 4,354.78
June	$ 4,490.95	$ 110.70	$ 720.00		$ 3,660.25
TOTAL	**$ 52,611.81**	**$ 1,257.85**	**$ 7,849.00**	**$ 26.67**	**$ 43,478.29**

2026-2027	Gross	ZOS3 4-23-03 off. safety equip.	ZMCSF 4-30-25 ct. security fee	ZSSBF - 02-15-47 1st responder fee	June - May NET to Town
July	$ 4,729.25	$ 131.47	$ 680.00		$ 3,917.78
August	$ 8,165.83	$ 261.11	$ 1,440.00		$ 6,464.72
Sept	$ 7,365.35	$ 201.40	$ 1,010.00		$ 6,153.95
October					
November					
December					
2027					
January					
February					
March					
April					
May					
June					
TOTAL	**$ 20,260.43**	**$ 593.98**	**$ 3,130.00**	**$ -**	**$ 16,536.45**

TOWN OF JEROME, ARIZONA
POST OFFICE BOX 335, JEROME, ARIZONA 86331
(928) 634-7943

Founded 1876
Incorporated 1899

November staff report for October activity submitted by Terri Card.

- Current debt (45 days past due):

20 accounts were on the shut-off list at the beginning of October. 12 accounts were sent Yellow Tags, and 1 account was shut off. It was paid in full and water was turned back on.

Balance owed on shut-off accounts from November billing: $2704.21
Balance owed at end of October: 8928.48
Fees: $200

- A copy of the November AR Aging report is attached.

Rentals
All renters made their rental payments and are on track.

Terri Card ☼ Customer Relations ☼
Town of Jerome 600 Clark Street Jerome, Arizona 86331 **t.card@jerome.az.gov**

Town of Jerome | Aging Report - Acct number only | Page: 1

Report Date: 10/31/2026 | Nov 02, 2026 7:39AM

Report Criteria:

Include inactive customers

Include active customers

Include customers with a credit balance

Aged using billing periods

Customer Number	Balance	10/31/2026	09/30/2026	08/31/2026	07/31/2026	Last Pmt Date	Last Pmt Amount	Msg	Final Bill Date
1000.01	.50	.50	.00	.00	.00	09/30/26	200.00-		
1001.03	200.50	200.50	.00	.00	.00	10/12/26	200.50-		
1003.02	134.72	134.72	.00	.00	.00	10/12/26	134.72-		
1006.02	134.72	134.72	.00	.00	.00	10/15/26	134.72-		
1007.02	338.56	169.28	169.28	.00	.00	09/30/26	169.28-		
1008.02	100.25	100.25	.00	.00	.00	10/12/26	100.25-		
1009.06	169.28	169.28	.00	.00	.00	10/26/26	517.84-		
1010.01	100.25	100.25	.00	.00	.00	10/19/26	100.25-		
1011.01	100.25	100.25	.00	.00	.00	10/15/26	100.25-		
1013.01	134.72	134.72	.00	.00	.00	10/28/26	134.72-		
1014.03	19.71	.00	.00	.00	19.71	05/07/26	46.41-	Final	05/14/26
1014.04	46.41	46.41	.00	.00	.00	10/15/26	46.41-		
1015.01	100.23	100.23	.00	.00	.00	10/28/26	100.15-		
1016.01	200.50	100.25	100.25	.00	.00	09/16/26	100.25-		
1018.03	169.28	169.28	.00	.00	.00	10/05/26	169.28-		
1021.01	44.77-	44.77-	.00	.00	.00		.00		
1022.01	100.25	100.25	.00	.00	.00	10/07/26	100.25-		
1024.01	11.53-	11.53-	.00	.00	.00	10/29/26	124.00-		
1025.01	25.52-	25.52-	.00	.00	.00	10/20/26	99.38-		
1027.01	100.25	100.25	.00	.00	.00	10/07/26	310.75-		
1028.04	100.25	100.25	.00	.00	.00	10/12/26	214.90-		
1029.01	338.56	169.28	169.28	.00	.00	09/08/26	338.56-		
1031.03	.02	.00	.00	.00	.02		.00	Final	06/01/12
1031.11	269.44	134.59	134.72	.13	.00	10/27/26	134.72-		
1032.01	100.25	100.25	.00	.00	.00	10/19/26	100.25-		
1036.11	100.25	95.90	4.35	.00	.00	10/03/26	100.25-		
1038.02	76.42-	76.42-	.00	.00	.00	10/12/26	100.00-		
1040.01	18.21	18.21	.00	.00	.00	10/19/26	18.21-		
1042.01	275.06	275.06	.00	.00	.00	10/19/26	275.06-		
1044.02	356.80	178.40	178.40	.00	.00	09/09/26	356.80-		
1051.02	200.50	200.50	.00	.00	.00	10/14/26	200.50-		
1055.05	252.87	.00	.00	.00	252.87		.00	Final	12/12/19
1055.08	100.25	100.25	.00	.00	.00	10/19/26	100.25-		
1056.02	97.28	97.28	.00	.00	.00	10/06/26	100.00-		
1057.01	100.25	100.25	.00	.00	.00	10/14/26	100.25-		
1058.05	100.25	100.25	.00	.00	.00	10/26/26	100.25-		
1059.02	23.94-	23.94-	.00	.00	.00	10/09/26	123.94-		
1060.02	100.25	100.25	.00	.00	.00	10/14/26	100.25-		
1061.01	134.72	134.72	.00	.00	.00	10/12/26	134.72-		
1062.03	100.25	100.25	.00	.00	.00	10/02/26	100.25-		
1063.02	149.23	58.18-	46.41	46.41	114.59	08/13/26	92.82-		
1064.04	434.24	.00	.00	.00	434.24		.00	Final	11/25/13
1064.08	60.18-	60.18-	.00	.00	.00		.00	Final	01/08/18
1064.12	393.22	.00	.00	.00	393.22		.00	Final	04/30/20
1064.15	178.40	178.40	.00	.00	.00	10/29/26	356.80-		
1065.01	78.78-	78.78-	.00	.00	.00		.00	Final	07/01/26
1066.01	75.98	75.98	.00	.00	.00	10/09/26	92.13-		
1069.02	32.72-	32.72-	.00	.00	.00	10/20/26	133.42-		
1071.05	269.44	134.72	134.72	.00	.00	09/16/26	269.44-		
1073.01	281.47-	281.47-	.00	.00	.00	10/29/26	140.00-		
1074.01	100.25	100.25	.00	.00	.00	10/21/26	100.25-		
1076.01	73.47	.00	.00	.00	73.47		.00	Final	04/26/22
1076.02	92.82-	92.82-	.00	.00	.00		.00	Final	10/31/22

Customer Number	Balance	10/31/2026	09/30/2026	08/31/2026	07/31/2026	Last Pmt Date	Last Pmt Amount	Msg	Final Bill Date
1076.04	149.23	.00	.00	.00	149.23		.00	Final	12/01/23
1076.05	169.28	169.28	.00	.00	.00	10/15/26	169.28-		
1077.01	71.26	71.26	.00	.00	.00	10/14/26	71.26-		
1078.02	127.85	127.85	.00	.00	.00	10/26/26	127.85-		
1079.02	315.06	315.06	.00	.00	.00	10/19/26	315.06-		
1080.01	69.78	.00	.00	.00	69.78	06/17/26	69.78-	Final	07/01/26
1080.02	101.07	101.07	.00	.00	.00	10/19/26	101.07-		
1081.01	73.27	73.27	.00	.00	.00	10/14/26	73.27-		
1082.01	4.85	4.85	.00	.00	.00	10/14/26	100.00-		
1083.05	72.83	53.31	19.52	.00	.00	09/30/26	100.00-		
1084.01	147.77	63.31	53.31	31.15	.00	08/12/26	110.00-		
1085.02	42.56-	42.56-	.00	.00	.00		.00	Final	10/02/13
1085.04	53.31	53.31	.00	.00	.00	10/15/26	53.31-		
1086.02	77.17	68.69	8.48	.00	.00	07/27/26	143.94-		
1087.01	53.31	53.31	.00	.00	.00	10/19/26	53.31-		
1088.06	53.31	49.71	3.60	.00	.00	10/14/26	53.31-		
1090.06	134.72	134.72	.00	.00	.00	10/02/26	134.72-		
1091.02	101.07	101.07	.00	.00	.00	10/19/26	101.07-		
1093.02	73.27	73.27	.00	.00	.00	10/08/26	146.54-		
1094.02	53.31	53.31	.00	.00	.00	10/14/26	53.31-		
1096.03	53.31	53.18	.13	.00	.00	10/26/26	169.93-		
1097.04	73.27	73.27	.00	.00	.00	10/14/26	73.27-		
1098.01	42.56	.00	.00	.00	42.56		.00	Final	06/24/13
1098.02	1.84-	1.84-	.00	.00	.00		.00	Final	12/23/21
1098.03	197.60	.00	.00	.00	197.60	02/26/24	100.00-	Final	03/31/24
1098.04	188.12	63.31	63.31	53.31	8.19	10/27/26	50.00-		
1099.03	482.04	482.04	.00	.00	.00	10/06/26	241.02-		
1100.02	73.27	73.27	.00	.00	.00	10/19/26	73.27-		
1104.08	19.45	.00	.00	.00	19.45		.00	Final	07/01/22
1109.01	99.11	95.93	3.18	.00	.00	08/10/26	250.00-		
1125.03	90.53-	90.53-	.00	.00	.00	08/06/26	200.00-		
1131.01	142.52	71.26	71.26	.00	.00	09/22/26	71.26-		
1132.01	102.86	100.25	2.61	.00	.00	10/13/26	99.38-		
1133.01	100.25	100.25	.00	.00	.00	10/29/26	100.25-		
1135.02	417.41	.00	.00	.00	417.41		.00	Final	01/01/14
1135.03	552.12	83.27	83.27	83.27	302.31	10/28/26	44.00-		
1139.01	200.50	100.25	100.25	.00	.00	09/08/26	200.50-		
1150.04	320.12	.00	.00	.00	320.12		.00	Final	08/31/20
1150.06	53.31	53.31	.00	.00	.00	10/07/26	53.31-		
1151.02	53.31	53.31	.00	.00	.00	10/08/26	106.62-		
1160.04	115.25	115.25	.00	.00	.00		.00		
1161.01	1.41	1.41	.00	.00	.00	10/21/26	42.24-		
1162.03	10.78	10.78	.00	.00	.00	10/26/26	10.78-		
1163.01	163.76	.00	.00	.00	163.76		.00	Final	07/01/15
1163.03	248.52	134.72	113.80	.00	.00		.00		
1165.04	100.25	100.25	.00	.00	.00	10/05/26	100.25-		
1166.02	101.07	101.07	.00	.00	.00	10/12/26	101.07-		
1167.16	82.44-	82.44-	.00	.00	.00	08/19/24	82.44-	Final	07/01/22
1168.01	100.25	100.25	.00	.00	.00	10/09/26	100.25-		
1169.02	134.72	134.72	.00	.00	.00	10/19/26	134.72-		
1170.01	75.70	71.08	4.62	.00	.00	07/27/26	279.12-		
1171.05	100.25	100.25	.00	.00	.00	10/07/26	2.61-		
1173.06	.86-	.86-	.00	.00	.00	10/06/26	100.00-		
1176.01	89.78-	89.78-	.00	.00	.00	10/15/26	400.00-		
1177.01	536.65	.00	.00	.00	536.65		.00	Final	10/31/16
1178.01	100.25	100.25	.00	.00	.00	10/19/26	100.25-		
1312.04	522.70	.00	.00	.00	522.70		.00	Final	08/21/12
1312.10	244.16	134.72	109.44	.00	.00	10/03/26	160.00-		

Customer Number	Balance	10/31/2026	09/30/2026	08/31/2026	07/31/2026	Last Pmt Date	Last Pmt Amount	Msg	Final Bill Date
1313.04	557.60	.00	.00	.00	557.60		.00	Final	03/01/12
1313.10	3.81	.00	.00	.00	3.81	10/14/24	57.00-	Final	10/01/24
1313.11	134.72	134.72	.00	.00	.00	10/06/26	269.44-		
1314.07	46.41	46.41	.00	.00	.00	10/13/26	46.41-		
1332.01	3.35	.00	3.35	.00	.00	09/09/26	100.25-		
1334.01	762.67	.00	.00	.00	762.67		.00	Final	01/01/22
1341.01	261.26-	261.26-	.00	.00	.00		.00	Final	01/01/22
1342.05	56.60	56.60	.00	.00	.00	10/19/26	56.60-		
1343.04	137.32	134.72	2.60	.00	.00	10/09/26	133.42-		
2000.02	328.52	110.23	110.25	108.04	.00	10/28/26	100.00-		
2001.01	467.24	.00	.00	.00	467.24		.00	Final	10/01/18
2001.02	774.66	179.28	179.28	179.28	236.82	09/30/26	100.00-		
2002.03	46.41	46.41	.00	.00	.00	10/13/26	46.41-		
2003.02	100.25	100.25	.00	.00	.00	10/12/26	100.25-		
2004.02	100.25	100.25	.00	.00	.00	10/21/26	100.25-		
2005.01	100.25	100.25	.00	.00	.00	10/07/26	2.61-		
2006.03	134.72	134.72	.00	.00	.00	10/15/26	134.72-		
2007.03	269.46	269.46	.00	.00	.00	10/19/26	269.46-		
2008.01	134.72	132.28	2.44	.00	.00	09/22/26	269.44-		
2009.01	130.61	130.61	.00	.00	.00	05/05/25	123.94-		
2010.03	134.72	134.72	.00	.00	.00	10/10/26	134.72-		
2011.05	100.25	100.25	.00	.00	.00	10/22/26	100.25-		
2012.01	9.60-	9.60-	.00	.00	.00	10/15/26	178.64-		
2013.01	134.72	134.72	.00	.00	.00	10/19/26	134.72-		
2014.01	134.72	134.72	.00	.00	.00	10/12/26	134.72-		
2015.02	543.57-	543.57-	.00	.00	.00	03/03/26	1,600.00-		
2016.05	206.10	.00	.00	.00	206.10		.00	Final	02/02/20
2016.06	134.16	134.16	.00	.00	.00	10/12/26	270.00-		
2017.01	100.25	100.25	.00	.00	.00	10/19/26	100.25-		
2018.01	.48	.48	.00	.00	.00	10/08/26	99.38-		
2019.03	46.41	46.41	.00	.00	.00	10/12/26	46.41-		
2020.01	169.28	169.28	.00	.00	.00	10/15/26	169.28-		
2021.06	471.26	.00	.00	.00	471.26		.00	Final	08/30/20
2021.07	414.16	144.72	134.72	134.72	.00	08/25/26	134.72-		
2022.01	169.28	169.28	.00	.00	.00	10/05/26	169.28-		
2023.03	100.25	100.25	.00	.00	.00	10/02/26	100.25-		
2024.01	134.72	134.72	.00	.00	.00	10/15/26	134.72-		
2026.02	134.72	134.72	.00	.00	.00	10/26/26	414.16-		
2028.01	138.53	134.72	3.81	.00	.00	10/08/26	133.43-		
2029.01	134.72	134.72	.00	.00	.00	10/14/26	134.72-		
2030.01	425.26	207.63	217.63	.00	.00	10/06/26	415.26-		
2031.01	169.26	169.26	.00	.00	.00	10/08/26	169.26-		
2032.03	100.25	100.25	.00	.00	.00	10/14/26	200.50-		
2034.01	100.25	100.25	.00	.00	.00	10/06/26	100.25-		
2037.03	134.72	134.72	.00	.00	.00	10/10/26	134.72-		
2038.01	100.25	100.25	.00	.00	.00	10/21/26	100.25-		
2042.01	55.29-	55.29-	.00	.00	.00		.00	Final	04/22/21
2042.02	134.72	134.08	.64	.00	.00	10/15/26	134.72-		
2043.03	134.72	134.72	.00	.00	.00	10/12/26	134.72-		
2044.01	100.25	100.25	.00	.00	.00	10/07/26	100.25-		
2046.02	58.60-	58.60-	.00	.00	.00		.00	Final	11/10/12
2046.05	1,457.87	.00	.00	.00	1,457.87		.00	Final	05/27/21
2046.07	82.04	82.04	.00	.00	.00	10/28/26	90.20-		
2047.02	169.28	169.28	.00	.00	.00	10/26/26	169.28-		
2054.01	284.75	178.40	106.35	.00	.00	10/07/26	360.00-		
2055.01	46.41	46.41	.00	.00	.00	10/06/26	46.41-		
2058.02	46.41	46.41	.00	.00	.00	10/14/26	46.41-		
2059.01	269.44	134.72	134.72	.00	.00	09/09/26	269.44-		

Customer Number	Balance	10/31/2026	09/30/2026	08/31/2026	07/31/2026	Last Pmt Date	Last Pmt Amount	Msg	Final Bill Date
2061.02	169.26	169.26	.00	.00	.00	10/14/26	169.26-		
2062.01	73.27	73.27	.00	.00	.00	10/07/26	73.27-		
2063.01	73.27	73.27	.00	.00	.00	10/15/26	73.27-		
2067.02	272.81-	272.81-	.00	.00	.00		.00		
2068.01	146.54	73.27	73.27	.00	.00	09/24/26	73.27-		
2069.02	53.31	39.26	14.05	.00	.00	10/12/26	53.31-		
2070.01	7.88-	7.88-	.00	.00	.00	10/19/26	65.43-		
2071.01	246.69-	246.69-	.00	.00	.00	10/21/26	359.15-		
2073.02	1,179.07	142.79	132.79	132.79	770.70	10/27/26	100.00-		
2077.01	23.27	23.27	.00	.00	.00	10/22/26	281.28-		
2078.01	101.07	99.59	1.48	.00	.00	09/15/26	202.14-		
2079.03	106.62	53.31	53.31	.00	.00	09/01/26	53.31-		
2080.02	46.41	44.96	1.45	.00	.00	10/26/26	92.82-		
2081.01	132.20-	132.20-	.00	.00	.00	09/15/26	300.00-		
2083.02	53.31	53.31	.00	.00	.00	10/08/26	53.31-		
2084.01	134.72	134.72	.00	.00	.00	10/07/26	134.72-		
2085.02	392.69	392.69	.00	.00	.00	10/19/26	392.69-		
2086.01	100.25	100.25	.00	.00	.00	10/10/26	100.25-		
2089.04	100.25	100.25	.00	.00	.00	10/15/26	100.25-		
2093.02	397.02	.00	.00	.00	397.02	10/30/24	605.53-	Final	12/01/24
2093.03	338.56	169.28	169.28	.00	.00	09/28/26	169.28-		
2100.01	82.04	82.04	.00	.00	.00	10/02/26	82.04-		
2102.09	311.78	.00	.00	.00	311.78		.00	Final	07/29/15
2103.01	134.72	134.72	.00	.00	.00	10/26/26	134.72-		
2104.08	200.50	100.23	100.25	.02	.00	09/30/26	100.25-		
2105.03	.38-	.38-	.00	.00	.00		.00	Final	02/05/21
2105.04	175.75	173.99	1.76	.00	.00	10/12/26	180.00-		
2106.01	134.72	134.72	.00	.00	.00	10/21/26	134.72-		
2107.01	71.35	71.35	.00	.00	.00	09/21/26	71.35-		
2109.03	100.25	100.25	.00	.00	.00	10/26/26	200.50-		
2110.01	545.41-	545.41-	.00	.00	.00	12/31/25	1,200.00-		
2113.01	134.72	134.72	.00	.00	.00	10/26/26	134.72-		
2115.01	134.72	134.72	.00	.00	.00	10/09/26	134.72-		
2119.05	134.72	134.72	.00	.00	.00	10/13/26	134.72-		
2120.01	134.72	134.72	.00	.00	.00	10/13/26	134.72-		
2121.02	73.27	73.27	.00	.00	.00	10/19/26	73.27-		
2122.05	234.97	234.97	.00	.00	.00	10/14/26	234.97-		
2123.01	41.29	41.29	.00	.00	.00	10/08/26	133.43-		
2124.01	134.72	134.72	.00	.00	.00	10/26/26	134.72-		
2125.02	73.27	73.27	.00	.00	.00	10/19/26	73.27-		
2126.06	310.75	110.25	100.25	100.25	.00	08/18/26	100.25-		
2127.07	36.85	.00	.00	.00	36.85	09/28/25	92.13-	Final	09/12/25
2127.08	100.25	100.25	.00	.00	.00	10/15/26	100.25-		
2128.02	735.83	.00	.00	.00	735.83	09/29/25	122.88-	Final	08/01/26
2130.06	234.97	234.97	.00	.00	.00	10/06/26	100.25-		
2131.02	583.02	.00	.00	.00	583.02		.00	Final	11/01/11
2131.04	42.56-	42.56-	.00	.00	.00		.00	Final	11/01/12
2131.09	89.87	.00	.00	.00	89.87	01/02/24	283.93-	Final	03/31/24
2131.10	146.54	73.27	73.27	.00	.00	09/15/26	73.27-		
2132.03	100.25	100.25	.00	.00	.00	10/12/26	100.25-		
3000.03	200.50	199.63	.87	.00	.00	10/15/26	200.50-		
3001.02	437.87	.00	.00	.00	437.87		.00	Final	05/31/21
3001.04	195.33	.00	.00	.00	195.33		.00	Final	10/31/22
3003.01	100.25	100.25	.00	.00	.00	10/28/26	100.25-		
3004.01	290.68	.00	.00	.00	290.68		.00	Final	11/05/13
3004.07	56.60	56.60	.00	.00	.00	10/19/26	56.60-		
3005.02	134.72	134.72	.00	.00	.00	10/15/26	134.72-		
3007.01	71.26	71.26	.00	.00	.00	10/19/26	71.26-		

Customer Number	Balance	10/31/2026	09/30/2026	08/31/2026	07/31/2026	Last Pmt Date	Last Pmt Amount	Msg	Final Bill Date
3009.01	169.28	169.28	.00	.00	.00	10/12/26	169.28-		
3010.01	134.72	134.72	.00	.00	.00	10/12/26	134.72-		
3011.01	100.25	100.25	.00	.00	.00	10/22/26	100.25-		
3012.03	19.28	19.28	.00	.00	.00	09/24/26	293.22-		
3013.01	134.72	134.72	.00	.00	.00	10/14/26	134.72-		
3014.01	104.49	104.49	.00	.00	.00	10/09/26	133.43-		
3015.01	100.25	100.25	.00	.00	.00	10/26/26	100.25-		
3016.01	133.92	133.92	.00	.00	.00	10/05/26	135.00-		
3017.01	460.82	.00	.00	.00	460.82		.00	Final	03/20/13
3017.03	100.25	100.25	.00	.00	.00	10/01/26	100.25-		
3018.01	134.72	134.72	.00	.00	.00	10/19/26	134.72-		
3019.01	102.42	102.42	.00	.00	.00	10/14/26	102.42-		
3021.01	53.31	53.31	.00	.00	.00	10/12/26	53.31-		
3022.03	73.27	73.27	.00	.00	.00	10/14/26	72.74-		
3023.01	294.89	.00	.00	.00	294.89		.00	Final	05/01/11
3023.05	71.35	71.35	.00	.00	.00	10/13/26	71.35-		
3024.02	46.41	46.41	.00	.00	.00	10/09/26	46.41-		
3025.02	134.72	134.72	.00	.00	.00	10/03/26	134.72-		
3026.02	571.32	.00	.00	.00	571.32	02/24/26	180.00-	Final	05/01/26
3026.03	310.75	110.25	100.25	100.25	.00	08/31/26	314.01-		
3029.01	134.72	134.72	.00	.00	.00	10/10/26	134.72-		
3030.09	382.30	128.45	134.72	119.13	.00	09/09/26	150.00-		
3032.12	178.40	178.40	.00	.00	.00	10/19/26	178.40-		
3035.01	259.44	134.72	124.72	.00	.00	09/17/26	279.86-		
3038.01	134.72	134.72	.00	.00	.00	10/09/26	134.72-		
3039.02	266.20-	266.20-	.00	.00	.00		.00	Final	04/01/17
3039.04	239.27	239.27	.00	.00	.00	10/15/26	239.27-		
3040.01	394.42	138.14	128.14	128.14	.00	08/31/26	254.78-		
4000.01	178.40	178.40	.00	.00	.00	10/12/26	178.40-		
4001.01	528.96	.00	.00	.00	528.96		.00	Final	02/22/18
5000.04	3.87	3.87	.00	.00	.00	08/19/26	737.11-		
5001.01	384.39	.00	.00	.00	384.39	10/15/24	210.83-	Final	11/07/24
5001.02	256.46	249.74	6.72	.00	.00	10/15/26	247.50-		
5005.01	46.96	46.96	.00	.00	.00	10/15/26	46.96-		
5006.01	249.74	249.74	.00	.00	.00	10/15/26	249.74-		
5007.01	440.34	440.34	.00	.00	.00	10/14/26	544.69-		
5008.03	257.40	257.40	.00	.00	.00	10/08/26	257.40-		
5009.02	276.09	276.09	.00	.00	.00	10/06/26	276.09-		
5010.01	900.10	306.70	296.70	296.70	.00	10/12/26	593.40		
5011.02	499.48	249.74	249.74	.00	.00	09/10/26	249.74-		
5012.01	249.74	249.74	.00	.00	.00	10/12/26	249.74-		
5013.01	540.27	540.27	.00	.00	.00	10/12/26	540.27-		
5014.01	249.74	249.74	.00	.00	.00	10/12/26	249.74-		
5015.01	310.75	110.25	100.25	100.25	.00	08/11/26	299.01-		
5016.01	296.69	296.69	.00	.00	.00	10/12/26	296.69-		
5016.03	100.25	100.25	.00	.00	.00	10/19/26	100.25-		
5016.04	100.25	100.25	.00	.00	.00	10/06/26	100.25-		
5016.05	134.72	134.72	.00	.00	.00	10/22/26	134.72-		
5017.04	249.74	249.74	.00	.00	.00	10/10/26	249.74-		
5018.03	839.86	839.86	.00	.00	.00	10/29/26	972.32-		
5019.03	257.46	257.46	.00	.00	.00	10/07/26	257.46-		
5020.02	93.92	46.96	46.96	.00	.00	09/09/26	93.92-		
5021.01	134.72	134.72	.00	.00	.00	10/08/26	137.32-		
5022.01	46.96	46.96	.00	.00	.00	10/26/26	46.96-		
5023.02	499.48	249.74	249.74	.00	.00	09/08/26	249.74-		
5025.01	134.72	134.72	.00	.00	.00	10/19/26	134.72-		
5027.01	46.73	46.73	.00	.00	.00	10/15/26	46.73-		
5029.01	400.20	400.20	.00	.00	.00	10/15/26	444.35-		

Customer Number	Balance	10/31/2026	09/30/2026	08/31/2026	07/31/2026	Last Pmt Date	Last Pmt Amount	Msg	Final Bill Date
5031.06	249.74	221.89	27.85	.00	.00	10/09/26	249.74-		
5039.01	249.74	249.74	.00	.00	.00	10/14/26	249.74-		
5041.03	343.66	343.66	.00	.00	.00	10/14/26	343.66-		
5043.01	1,228.91	1,228.91	.00	.00	.00	10/12/26	1,184.76-		
5046.03	202.78	202.78	.00	.00	.00	10/22/26	202.78-		
5047.01	1,124.44	1,124.44	.00	.00	.00	10/09/26	1,083.60-		
5049.04	249.74	249.74	.00	.00	.00	10/15/26	249.74-		
5052.06	46.96	46.96	.00	.00	.00	10/08/26	46.96-		
5055.01	157.51-	157.51-	.00	.00	.00	10/26/26	2,000.00-		
5057.01	947.33	947.33	.00	.00	.00	10/12/26	914.23-		
5058.02	270.34	270.34	.00	.00	.00	10/13/26	270.34-		
5059.05	46.41	46.41	.00	.00	.00	10/19/26	49.02-		
5061.01	202.78	202.78	.00	.00	.00	10/05/26	202.78-		
5062.01	393.64	393.64	.00	.00	.00	10/20/26	189.49-		
5064.02	267.95	267.95	.00	.00	.00	10/12/26	267.95-		
5066.03	44.72	.00	.00	.00	44.72	12/16/24	44.72-	Final	01/01/25
5067.04	249.77	230.50	19.27	.00	.00	09/24/26	749.19-		
5074.06	217.12-	217.12-	.00	.00	.00	10/02/26	250.00-		
5076.01	669.40	5.65-	15.97	479.04	180.04	07/15/26	456.23-	Final	09/01/26
5077.03	284.84	284.84	.00	.00	.00	10/19/26	284.84-		
5078.02	234.23	.00	.00	.00	234.23		.00	Final	07/01/15
5080.01	249.74	249.74	.00	.00	.00	10/26/26	759.22-		
5083.11	1,660.96	.00	.00	.00	1,660.96	02/25/26	50.00-	Final	07/01/26
5083.12	264.74	264.74	.00	.00	.00		.00		
5089.01	732.52-	732.52-	.00	.00	.00	10/08/26	935.00-		
5092.01	258.56	258.56	.00	.00	.00	10/12/26	785.68-		
5093.01	1,466.35	.00	.00	.00	1,466.35		.00	Final	09/15/12
5093.05	249.74	249.69	.05	.00	.00	10/08/26	260.77-		
5094.02	249.95	249.95	.00	.00	.00	10/12/26	249.95-		
5095.02	671.26	671.26	.00	.00	.00	10/12/26	646.48-		
5096.03	249.74	249.74	.00	.00	.00	10/08/26	501.72-		
5097.02	249.74	249.74	.00	.00	.00	10/19/26	249.74-		
5098.06	258.56	258.56	.00	.00	.00	10/05/26	258.56-		
5100.04	75.10-	75.10-	.00	.00	.00		.00	Final	07/01/12
5100.07	134.72	134.72	.00	.00	.00	10/08/26	134.72-		
6000.03	396.31	396.31	.00	.00	.00	10/06/26	396.31-		
6001.01	335.22	335.22	.00	.00	.00	10/14/26	335.22-		
6003.01	461.00	188.40	188.40	84.20	.00	10/28/26	272.60-		
6004.02	100.25	100.25	.00	.00	.00	10/06/26	99.38-		
6005.03	138.62	134.72	3.90	.00	.00	10/14/26	133.42-		
6006.01	401.00	200.50	200.50	.00	.00	09/02/26	401.00-		
6007.02	296.70	296.70	.00	.00	.00	10/12/26	296.70-		
6008.01	679.76	679.76	.00	.00	.00	10/12/26	714.83-		
6009.03	554.16	277.08	277.08	.00	.00	09/08/26	277.08-		
6010.03	265.24	265.24	.00	.00	.00	10/12/26	265.24-		
6011.02	269.44	134.72	134.72	.00	.00	09/02/26	269.44-		
6012.01	100.25	100.25	.00	.00	.00	10/12/26	100.25-		
6013.02	134.72	134.72	.00	.00	.00	10/06/26	134.72-		
6014.01	338.56	169.28	169.28	.00	.00	09/29/26	169.28-		
6015.01	93.30	93.30	.00	.00	.00	10/14/26	92.60-		
6017.02	200.50	200.50	.00	.00	.00	10/05/26	200.50-		
6018.01	304.89	304.89	.00	.00	.00	10/06/26	308.89-		
6019.02	275.06	275.06	.00	.00	.00	10/19/26	275.06-		
6020.05	134.72	134.72	.00	.00	.00	10/12/26	134.72-		
6021.04	100.25	100.25	.00	.00	.00	10/03/26	310.75-		
6022.02	92.82	46.41	46.41	.00	.00	09/09/26	46.41-		
6023.04	1,234.72	1,234.72	.00	.00	.00	10/05/26	1,200.25-		
6023.05	534.72	534.72	.00	.00	.00	10/19/26	534.72-		

Customer Number	Balance	10/31/2026	09/30/2026	08/31/2026	07/31/2026	Last Pmt Date	Last Pmt Amount	Msg	Final Bill Date
6025.03	87.51	.00	.00	.00	87.51	01/09/24	125.02-	Final	01/01/24
6025.04	30.53	30.53	.00	.00	.00	09/28/26	129.29-		
6026.02	3,793.99	.00	.00	.00	3,793.99		.00	Final	12/02/10
6026.05	681.92	681.92	.00	.00	.00	10/12/26	681.92-		
6027.02	144.89	.00	.00	.00	144.89		.00	Final	12/01/17
6027.04	73.27	73.27	.00	.00	.00	10/15/26	105.00-		
6028.08	100.25	100.25	.00	.00	.00	10/20/26	310.75-		
6029.01	188.37	100.25	88.12	.00	.00	10/15/26	80.00-		
6031.02	100.25	100.25	.00	.00	.00	10/15/26	100.25-		
6032.01	277.08	277.08	.00	.00	.00	10/12/26	277.08-		
6033.04	452.50	452.50	.00	.00	.00	10/12/26	452.50-		
6040.03	697.60	.00	.00	.00	697.60		.00	Final	10/01/11
6040.04	310.75	110.25	100.25	100.25	.00	08/27/26	299.01-		
6041.02	138.62	134.72	3.90	.00	.00	10/13/26	133.42-		
7001.06	148.46	148.46	.00	.00	.00	10/05/26	176.22-		
7002.01	264.51	264.51	.00	.00	.00	10/08/26	264.51-		
7004.01	100.25	100.25	.00	.00	.00	10/26/26	100.25-		
7005.04	670.09	.00	.00	.00	670.09		.00	Final	05/03/12
7005.05	37.27-	37.27-	.00	.00	.00		.00	Final	11/01/13
7006.01	62.51-	62.51-	.00	.00	.00		.00	Final	09/08/11
7006.12	73.24	73.24	.00	.00	.00	10/13/26	73.28-		
7007.02	49.20	46.96	2.24	.00	.00	10/14/26	4.48-		
7010.01	434.70	434.70	.00	.00	.00	10/12/26	434.70-		
7012.08	100.25	100.25	.00	.00	.00	10/15/26	100.25-		
7015.01	249.74	249.74	.00	.00	.00	10/08/26	249.74-		
7017.03	31.95	31.95	.00	.00	.00	10/19/26	31.95-		
7022.01	46.96	46.96	.00	.00	.00	10/14/26	46.96-		
7024.02	198.83	.00	.00	.00	198.83		.00	Final	12/31/22
7025.01	100.25	100.25	.00	.00	.00	10/08/26	100.25-		
7026.04	269.44	134.72	134.72	.00	.00	09/22/26	412.86-		
7029.01	26.30	.00	.00	.00	26.30		.00	Final	02/17/23
7029.02	134.72	134.72	.00	.00	.00	10/15/26	134.72-		
7040.03	440.77	.00	.00	.00	440.77		.00	Final	02/02/17
7041.01	55.96-	55.96-	.00	.00	.00	10/13/26	154.36-		
7044.02	144.16	.00	.00	.00	144.16	12/26/24	44.72-	Final	03/01/25
7044.03	46.96	46.96	.00	.00	.00	10/15/26	45.04-		
7046.02	178.40	178.40	.00	.00	.00	10/29/26	545.20-		
7047.01	106.16	46.96	56.96	2.24	.00	10/01/26	44.72-		
7052.02	100.25	85.03	15.22	.00	.00	09/23/26	200.50-		
7053.02	320.01	.00	.00	.00	320.01		.00	Final	12/01/18
7053.07	134.72	134.72	.00	.00	.00	10/10/26	134.72-		
7054.01	179.91	179.91	.00	.00	.00	10/08/26	179.91-		
7057.02	30.88	27.34	3.54	.00	.00	10/26/26	23.80-		
7058.01	296.17	.00	.00	.00	296.17		.00	Final	12/01/13
7059.01	46.86-	46.86-	.00	.00	.00		.00	Final	11/01/13
7059.02	463.21	.00	.00	.00	463.21		.00	Final	03/12/20
7059.03	46.41	46.41	.00	.00	.00	10/06/26	46.41-		
7060.01	249.74	249.74	.00	.00	.00	10/08/26	249.74-		
8001.01	2,065.34	2,065.34	.00	.00	.00	10/15/26	2,128.55-		
8004.04	1,431.52	1,431.52	.00	.00	.00	10/15/26	1,530.15-		
8008.01	63.00-	63.00-	.00	.00	.00	10/08/26	189.00-		
8010.01	42.60	42.60	.00	.00	.00	09/28/26	90.00-		
8012.03	60.00	37.59	22.41	.00	.00	09/28/26	60.00-		
8014.03	634.56	317.28	317.28	.00	.00	11/01/26	317.28-		
8015.03	276.87	276.87	.00	.00	.00	09/08/26	555.06-		
8022.03	2,844.00	2,844.00	.00	.00	.00	10/12/26	2,844.00-		
8023.03	267.52	267.52	.00	.00	.00	10/05/26	267.52-		
8028.01	347.36	.00	.00	.00	347.36		.00	Final	03/31/12

Town of Jerome

Aging Report - Acct number only
Report Date: 10/31/2026

Nov 02, 2026 7:39AM

Customer Number	Balance	10/31/2026	09/30/2026	08/31/2026	07/31/2026	Last Pmt Date	Last Pmt Amount	Msg	Final Bill Date
9999.01	8,784.02-	8,784.02-	.00	.00	.00		.00	Final	01/01/22
10100.01	134.72	134.72	.00	.00	.00	10/08/26	134.72-		
Grand Totals:									
	76,229.39	41,984.03	6,458.02	2,279.57	25,507.77				

Library Staff Report , September - October 2026

- The New Yavapai Library Network public- facing website officially launched on October 5 2026, this milestone gives community members and fellow library consortiums a central place to learn about our Network,find member libraries and explore shared resources and services. It is now live at www.YLN,info

- The Public Library Survey for FY 25/26 will be due February 2027. This does not affect the performance period fpr the information being reported which for this year will encompass July 1 2025 to June 30 2026.

- Attended Nationwide Retirement Seminars.

- Attended Training for Book Club Kits (My Turn)

MyTurn enables patrons to reserve up to 10 book club kits directly from the owning library.

- Library Staff reviewed the updated Town of Jerome Personnel Policy Handbook.

- Arranged for new Cisco Switch to be sent to the library directly from manufacturer, this will save considerable time and allow for an earlier install.

- The Jerome Community Art Workshop classes scheduled for November and December

November 14, Essential Oil, Air Dry Clay Diffusers,	10am to Noon
November 16, Natural Dyeing with Sappenwood	10am to Noon
November 28, Felting Neck Warmers	Noon to 3 pm
December 9 Felting fingerless gloves	Noon to 3 pm

Jerome Fire Department

P.O. Box 1025 Jerome, AZ 86331 Tel. (928) 649-3034 Fax (928) 649-3039
E-mail: admin@jeromefd.org

Fire Chief's Report

Month: October Year: 2026

October			
10/01/26	Through		10/31/26
Incident breakdown	Number	Resident	Non-Resident
EMS	13	6	7
Residential Fire	0	0	0
Commercial Fire	1	0	1
Wildland	0	0	0
Still Assignment	2	2	0
Station Staffing	3	3	0
Citizen Assist	2	2	0
Agency Assist	1	1	0
Special Duty	6	5	1
Snake Removal & Relocation	0	0	0
Tech Rescue	1	0	1
MVA/Rescue	2	1	1
Hazmat	2	1	1
Dispatch Error	0	0	0
Total Number of Calls	33	21	12

Department Meetings and Drills	Number
Rope Drill	1
Thursday night training	4

Weekly Training:

- Thursday October 1st– Airway management
- Thursday October 8th-AAR suicide/Hazmat call
- Thursday October 15th- Pumping
- Thursday October 22nd- Tagging a Hydrant
- Saturday October 24th- Ropes Anchors
- Thursday October 29th- Dance Set up
- Saturday October 31st Dance

Department Affairs and Ongoing Projects

- The Halloween Dance, this year was a catastrophic success. The storm did not stop around seven hundred people from attending the dance. We had some water issues and struggled through them until the last hour when we had to give up. I have heard many say it was a good time. The best part of the dance is that there were no injuries! The sad part is two of our Bar tenders, who are also the caretakers of the Little Daisy suffered a total loss of their house and property during the storm and flooding on Sunday.
- Joe Lee has completed his EMT class. He is waiting for the mandatory time to take his National Registry.
- Jerrith Foster has taken an I.V. course and is now able to administer I.V.s. That gives the department five qualified people. This is a vital skill with the long ambulance response times.
- We were able to hold ropes class the week of October 12th through the 18th. The class went well. We were able to send five of our new personnel through it. This bolsters our rope team significantly.
- Starting November 14th both John and Jerrith are attending the Greater Verde Valley fire onboarding Fire Academy. This will strengthen their skills and our relationships with our mutual aid partners.
- New Volunteers, we have been getting a few new volunteers in the last few months. This helps with response. With the volunteers now able to spend the night at the station we have been able to reduce the average response time. In the next few months, I will be compiling a **r**eport on the response times with and without overnight staffing.
- We had a couple of significant alarm calls this last month. The first was a suicide by chemical. This call was very difficult as the chemical was extremely toxic. We had to clear the scene for YCSO and make sure it was safe to enter. During the transport of the body the driver became ill and reported to YRMC for exposure. I worked with YCSA YCEOM to find a way to dispose of the chemical. In the end I scheduled a meeting with multiple agencies to discuss the incident. The discussion was good and we all have a better understanding of how to approach incidents like this if it were to happen again.

  The next significant alarm was a swift water rescue. On 10/15 there were multiple rescues occurring at approximately the same time. I heard on the radio that one of our partners did not have a swift water team available and put ours in service. We were dispatched to the Verde Lakes area for a person stuck on a sand bar. We responded with our team and were cancelled at the Cherry rd. and the 260 roundabouts. I would like to thank John Krmpotich and Kerry Lee for their willingness to respond to incidents like these.
- Town Siren: I have received the part from the machinist. I have ordered some material for the clutch and brakes. I am hoping all of this will work. If these repairs don't work, we will need to find original parts.

July Fire Department Activities and Run Report:

10/1/26	17:00	Thu	***Meeting/Training***	Airway management	16
10/2/26	8:00	Fri	Still Assignment Resident	Pile burn	2
10/3/26	**10:02**	**Sat**	**EMS Non-Resident**	**Broken ankle**	**5**
10/4/26	**14:10**	**Sun**	**EMS Resident**	**Chest pain**	**4**
10/4/26	**16:41**	**Sun**	**EMS Resident**	**Suicidal ideations**	**5**
10/4/26	**18:26**	**Sun**	**EMS Resident**	**Difficulty Breathing**	**4**
10/4/26	**20:40**	**Sun**	**Hazmat Non-Resident**	**Hazmat Mutual Aid**	**9**
10/5/26	**12:25**	**Mon**	**Special Duty Non-Resident**	**Scene clean up**	**4**
10/8/26	14:30	Thu	Citizen Assist Resident	Wasp Nest	5
10/8/26	17:00	Thu	***Meeting/Training***	AAR of Hazmat/Suicide, Hazmat overview	12
10/8/26	**18:06**	**Thu**	**EMS Non-Resident**	**39 YOM Assault Victim**	**14**
10/10/26	**14:59**	**Sat**	**EMS Resident**	**Unknown YOF Fall**	**5**
10/11/26	9:48	Sun	Special Duty Resident	Remove Tree	3
10/11/26	10:30	Sun	Special Duty Resident	Remove Shed	3
10/11/26	12:00	Sun	Special Duty Resident	Remove Tree	4
10/12/26	14:15	Mon	Special Duty Resident	Vehicle Lockout	1
10/13/26	**13:41**	**Tue**	**EMS Non-Resident**	**False Alarm**	**10**
10/14/26	16:44	Wed	Agency Assist Resident	Oversize	6
10/15/26	17:00	Thu	***Meeting/Training***	Repeat meeting	9
10/15/26	**13:36**	**Thu**	**EMS Non-Resident**	**84 YOF Fainting**	**9**
10/16/26	14:00	Fri	Citizen Assist Resident	Wasps	4
10/16/26	8:00	Fri	Station Staffing Resident	Station Staffing for ropes class	4
10/17/26	8:00	Sat	Station Staffing Resident	Station Staffing for ropes class	4
10/18/26	**18:14**	**Sun**	**EMS Resident**	**69 YOF Breathing Difficulty**	**6**
10/19/26	**21:48**	**Mon**	**MVA/Rescue Resident**	**No incident found**	**4**
10/20/26	**6:20**	**Tue**	**MVA/Rescue Non-Resident**	**Rollover**	**7**
10/21/26	**19:33**	**Wed**	**EMS Resident**	**82 YOM Abdominal Bleed**	**4**
10/22/26	17:00	Thu	***Meeting/Training***	Tagging a hydrant	16
10/22/26	**15:52**	**Thu**	**Tech Rescue Non-Resident**	**Rescue TRT Swiftwater Cancelled Enroute**	**7**
10/24/26	9:00	Sat	***Meeting/Training***	Rope Training - Anchors	4
10/24/26	**13:50**	**Sat**	**Commercial Fire Non-Resident**	**Mutal Aid, Cancelled Enroute**	**3**
10/25/26	**10:30**	**Sun**	**Still Assignment Resident**	**Fire Alarm/false alarm**	**4**
10/27/26	*3:51*	**Tue**	**Hazmat Resident**	**Sewer Smell**	**3**
10/28/26	**12:41**	**Wed**	**EMS Non-Resident**	**Sick Person**	**4**
10/29/26	17:00	Thu	***Meeting/Training***	Dance Setup	17
10/30/26	**8:49**	**Fri**	**EMS Non-Resident**	**66 YOM Sick Person**	**9**
10/31/26	15:00	Sat	Station Staffing Resident	Halloween Dance	16

Jerome Volunteer Fire Department Attendance Report

01/01/26 Through 10/31/26

Member Name	Meeting Attendance	Alarm Call Attendance	After Hours Alarms	JFD Call Attendance	Total Calls & Meetings Attended	Member Type
TOTAL POSSIBLE	***62***	***141***	***17***	***104***	***307***	
Whiting, Carl	52	106	12	69	227	Chief - FF - EMT
San Felice, Rusty	50	35	2	3	88	Officer - EMT
Doss, Jayne	20	-	-		20	Officer - EMT
Giles, Jacob	18	6	1	1	25	Officer - FF
Lee, Kerry	54	94	8	10	158	Officer -EMT
Krmpotich, John	57	119	12	62	238	FTE - FF - EMT
Lee, Joesph	52	51	1	37	140	FTE
Callan, Riley	38	35	2	22	73	EMT
Brigante James	24	45	5	25	69	FTE - FF - EMT
Ondovchak, Lee	33	30	-	7	70	Member - FF
San Felice, Brandon	17	15	2	1	33	Member - FF
Sharif, Michele	31	22	1	5	58	Member - EMT
Carlos, Godina	12	11	-	-	23	Member/PD
Hutchinson, Sierra	24	3	-	-	27	Member - EMT
Alexander, Adam	30	12	4	9	51	Member - EMT
James, Irwin	10	27	2	14	51	Member - FF
Stan, Marty	19	7	1	1	27	Member - EMT
Stan, Launa	10	-	-	1	11	Member - EMT
Staab, Scott	-	12	1	-	12	Member - Support
Miller, Rebecca	8	2	-	-	10	Member - Swiftwater
Higginson, Michael	18	6	-	-	24	Member - Support
Supple, Jason	35	23	2	-	58	Member-TRT/Drone
Hembrough, Chad	23	16	3	-	39	Member - Support
Adsluf, Gregory	12	13	-	5	**30**	Member - WLFF

Membership Atendance Percentages				
	1/1/26-10/31/26			
Member Name	Meeting Attendance	Alarm Call Attendance	In town	Notes
Members must attend	33% Meetings per bylaws			Officers must attend 50% meetings Per bylaws *
Whiting, Carl *	83.87%	74%	Y	Full time employee **Officer**
San Felice, Rusty *	80.65%	25%	N	Police department **Officer**
Doss, Jayne *	32.26%	0%	Y	**Does not respond** Officer
Giles, Jacob *	29.03%	4%	Y	**Responds to fire alarms** Officer
Lee, Kerry *	85.48%	67%	Y	Police Department TRT **Officer**
Krmpotich, John	91.94%	84%	Y	Fulltime employee
Joseph, Lee	83.87%	36%	N	Full time employee
Callan, Riley	61.29%	25%	N	Prescott Valley former employee
Brigante, James	38.71%	32%	N	Fulltime employee
Ondovchak, Lee	53.23%	21%	N	Clarkdale
San Felice, Brandon	27.42%	11%	Y	**Owes $1800.00 for EMT class, Went to Copper Canyon Fire**
Sharif, Michele	50.00%	16%	Y	Assist with admistrative and IT
Carlos, Godina	19.35%	8%	N	**Owes $1800.00 for EMT class did not pass the class**
Hutchinson, Sierra	38.71%	2%	N	Clarkdale
Alexander, Adam	48.39%	9%	N	Prescott Valley
James, Irwin	16.13%	19%	N	Centerville
Stan, Marty	30.65%	5%	N	Prescott Valley
Stan, Launa	16.13%	0%	N	Prescott Valley
Staab, Scott	0.00%	9%	Y	Moving out of town
Miller, Rebecca	12.90%	1%	y	Responds when available
Higginson, Michael	29.03%	4%	Y	Retired 9/28/26
Supple, Jason	56.45%	16%	N	Out of state Family emergency
Hembrough, Chad	37.10%	11%	Y	Out of state for work
Adsluf, Gregory	19.35%	9%	N	out of state moving to Clarkdale

Thank you for your continuing support.
Jerome Fire Department
Carl Whiting
Fire Chief

TOWN OF JEROME, ARIZONA

POST OFFICE BOX 335, JEROME, ARIZONA 86331
(928) 634-7943 FAX (928) 634-0715 m.boland@jerome.az.gov

Celebrating Our 124nd Anniversary
1899 - 2026

Founded 1876
Incorporated 1899

October 2026
PUBLIC WORKS
MONTHLY REPORT

NORMAL WEEKLY DUTIES

- TRASH: Monday, Wednesday, and Friday.
- PARKS: Clean parks, Weed whip, and Mow.
- RECYCLE: Pickup cardboard Monday, Wednesday, and Friday. The trailer goes to recycle on Thursdays.
- WATER: Read water meters on Thursdays.
- HURF: Clean curb and gutters, Weed whip.
- SEWER: Repair lines.

OTHER PROJECTS

- Upon finishing the water line in deception, we were told after a few weeks that one service was left out. That was on us, we traced all lines and thought we had them all located and knew how to tie them all in. Once discovered, we ordered the parts, dug and placed a new line and back filled.
- Grade work on 1st and North Dr.
- Repair the roof above the cop shop
- We had quite a few sewer issues throughout the month that individually weren't bad, bad all totaled took up quite a bit of time.
- Weve had a lot of storms and water this month, and we've been doing a lot of repairs and or clean up from them.
- Hauled 4 or five loads of sand out to Walnut.
- Haul all pipe and fittings out to Walnut
- Do a little work on the concrete on Hull. Unfortunately, this has been a busy month with a lot of little things that have come up and put this on the back burner.
- Water leak in the Gulch Above Jane's house.
- We replaced a valve on the Giroux st. regulator.

- A few small repairs on water and gate at the apt on Verde.
- Water leak on School St. Broken service line.
- Water leak on the sprinklers in the Middle park.
- We had an issue with the regulators on School St. The upper 2 inch was not working correctly due to ware; we worked late into the night to rebuild it and the lower 2" that was affected from the upper. We were able to get it stabilized, but we realized the issue with the upper 2" and decided to pull it and install a new 2". That fixed the issue until the whole system gets replaced in the next week or so.
- Cleaned out the drainage in the lower Gulch.
- Pulle apart the 10" valve at walnut, cleaned, relubricated and put it back together.
- The pipe at Walnut is so dilapidated. As you all know we've decided to bypass the cistern and pipe the whole thing. If you have any questions about it, please contact me.

Its been a busy month for sure. We also welcomed a new employee Alex Curtner, whose first day was on the 2nd of November.

JEROME POLICE DEPARTMENT

RUSSELL SAN FELICE, CHIEF
305 MAIN STREET
POST OFFICE BOX 335
JEROME, ARIZONA 86331
(928) 634-8992
FAX (928) 649-2776

November 3, 2026

TO: Honorable Mayor and Jerome Town Council

FROM: Russell J. San Felice, Chief of Police

Attached please find the police activity reports for October 2026.

During the month of October, the police department responded to 205 calls for service. Jerome Police handled one shoplifting case, with a fairly significant value in property taken from two retailers in Jerome. The suspect was apprehended and the property recovered. We had a disorderly conduct/assault arrest in front of the big steps. We have one death investigation of a long time Jerome resident. The doors were locked and there were no signs of foul play. Preliminary investigation seems to show natural causes. We are waiting on the final report from the medical examiner.

Jerome police held a Town meeting near the end of October. We feel the meeting was very productive. We heard from residents about their concerns and some good ideas came from the meeting, helping the police department improve community relations. Ironically, at this meeting we heard some residents who would like to see more enforcement and some residents think there is too much enforcement. This seems to be the balance we are always confronted with. Jerome Police will continue to focus on the more egregious violations and use discretion when appropriate. We will continue to work on improving community relations, accountability and transparency. We will work to have more events for the community to interact with us going forward.

Jerome Police Officers and Parking Officers conducted several enforcement actions over the month of October. There were 426 parking citations written and 17 parking violation warnings. There were 55 citations and 21 warnings for various moving traffic violations.

For the October 2026 status report, here are the kiosk totals:

October 2026: $54,334.25
October 2025: $60,067.75

Current Fiscal year total (July 1, 2026-June 30, 2027): $155,721.50

Respectfully,

Russell J. San Felice
Chief of Police

JEROME POLICE DEPARTMENT
305 MAIN STREET
JEROME, AZ 86331
(928) 634-8992

Calls For Service Totals By Call Type

10/01/2026 to 10/31/2026

Call Type		Totals
205	Trespass	1
240	Assault	1
410	Criminal Damage	1
459A	Burglar Alarm	1
470	Fraud	1
476	Animal Control Problem	1
487	Theft	2
500	Welfare Check	2
585	Traffic Hazard	2
647A	Suspicious Person	1
647B	Suspicious Vehicle	1
666A	Suicide Attempt / Report	2
692	DUI	2
901H	Death Investigation	1
903	Follow-Up	48
908F	Found Property	8
908L	Lost or Stolen Property	3
917	Abandoned Vehicle	2
961	Accident - No injuries	2
AA	Agency Assist	1
ACP	Assist Cottonwood PD	3
ACPD	Assist Clarkdale PD	2
ADPS	Assist DPS	2
AF	Assist Fire Department	5
AYCSO	Assist YCSO	12
BI	Background Investigation	3
CA	Citizen Assist	2
CO	Call Out	2
CSEC	Court Security	1
DIS	Disorderly Conduct	2
FP	Foot Patrol	11
HSE	Hampshire Speed Enforcement	1
HUC	911 Hang Up Call	1
INFO	Information	6
NOISE	Noise Complaint	1
OT	Oversize Truck	5
PARKV	Parking Violation	2
PE	Parking Enforcement	24

JEROME POLICE DEPARTMENT
305 MAIN STREET
JEROME, AZ 86331
(928) 634-8992

Calls For Service Totals By Call Type

10/01/2026 to 10/31/2026

Call Type		Totals
PKM	Parking Kiosk Maintenance	2
PS	Civil Paper Service	1
REC	Reckless Driver	1
SC	Security Check	12
SED	Special Event Detail	1
SL	Shoplifting	2
SLC	Street Light Check	5
SPE	Special Event	1
SS	Suspicious Situation	1
T/S	Traffic Stop	6
TRN	Training	3
VCO	Violate Court Order	1
VTC	Violation of Town Code	1
Grand Total for all calls		205

JEROME MUNICIPAL COURT
Hon. Angela M. Bradshaw Napper, Magistrate
P. O. Box 335 / 600 Clark Street
Jerome, AZ 86331 Phone (928) 649-3250

TO: Jerome Town Council

FROM: Angela M. Bradshaw Napper, Magistrate

SUBJECT: Monthly Staff Report

DATE: November 3, 2026

It feels good to write this report on election day. I would like to take this opportunity to thank members of the town council, both new and not-so-new, for their service to the Town of Jerome. Leadership can be a tricky responsibility to navigate. Service leadership is even trickier – the public nature of the job and the unavoidable scrutiny of the decision-making process by peers, neighbors, and friends is not for the faint of heart. Indeed, it is a courageous endeavor to voluntarily represent the interests of others by running for and accepting a position in public office. Your jobs are not easy, with so much to learn, understand, and decide in an ever-changing landscape of competing demands and limited resources. So, thank you for your service and cheers to you for the coming year. I regret that I am unable to be there for your swearing-in ceremony on November 10. My warmest regards and best wishes to each of you.

October flew by with a one-day judicial training for me in Phoenix early in the month, a well-deserved vacation for the court clerk mid-month, hearings all month long, and a quarterly Security and Emergency Preparedness Committee (SEPC) meeting at the end of the month.

Our financials remain in excellent shape and over the past few months Defendants have been making larger payments or paying in full upon the completion of the case. Court-appointed counsel cases are slightly more in number based on the past several months, but I believe that court filings are up as well.

Updating court fees across different payment platforms remains on-going, as does updating court forms and procedures required by new legislation that has already taken effect or will take effect shortly after the first of the year. I met with Chief San Felice to review court safety standards and will meet with a contractor later this week to review developing plans to remodel and improve the court space.

Town Council members, especially new members, are always welcome to come to the Court for a tour, a visit, or to observe court proceedings. As always, I am grateful to be of service to the Town of Jerome.

File Attachments for Item:

A. Report Provided by the Zoning Administrator. Minutes are Provided for Information Only and do Not Require any Action

Founded 1876
Incorporated 1899

Town of Jerome, Zoning Administrators Report

Town Council: Tuesday, November 10th, 2026
Prepared by: William Blodgett, Zoning Administrator

Planning & Zoning Commission-

- The regular meeting of the Planning & Zoning Commission was cancelled, with no new business awaiting review.

Design Review Board- The regular meeting of the Design Review Board was cancelled due to a lack of Quorum available to meet. Items waiting review will have to be seen at the November regular meeting.

Board of Adjustment- The Board of Adjustment did not meet in October, but has a meeting date set for Thursday, November 12.

Code Enforcement-

- 710 Clark Street- Ongoing
- 889 Hampshire- Ongoing
- 896 Hampshire- Ongoing

Administrative Approvals- None for October 2026

Other Business-

- Brownfields Grant
- EPA & ADEQ site visit
- Preparing for Tourism/Economic discussion in Camp Verde in November.
- Preparing for BoA meeting
- Reviewing and prioritizing dry-stacked stone walls throughout recent rains.
- Multiple renovation projects throughout town requiring some level of oversight.
- Successfully scanned one historic basemap from TOJ archives.
- Continued filling public records request.

File Attachments for Item:

A. Consider Approval of the October 13, 2026, Regular Council Meeting Minutes

Council may approve the October 13, 2026, Regular Council Meeting minutes.

TOWN OF JEROME

POST OFFICE BOX 335, JEROME, ARIZONA 86331
(928) 634-7943
www.jerome.az.gov

DRAFT MINUTES
REGULAR COUNCIL MEETING OF THE TOWN OF JEROME
COUNCIL CHAMBERS, JEROME TOWN HALL
600 CLARK STREET, JEROME, ARIZONA

TUESDAY, OCTOBER 13, 2026, AT 7:00 PM

Due to the length of this meeting, Council may recess and reconvene at the time and date announced.

7:00PM (0:29) 1.CALL TO ORDER/ROLL CALL

Mayor/Chairperson to call meeting to order
Town Clerk to call and record the roll.

Present were Mayor Christina "Alex" Barber, Vice Mayor Jane Moore, and Councilmembers Dr. Jack Dillenberg, Issam "Izzy" Sharif and Sonia Sheffield.
Staff present were Town Manager Brett Klein, Zoning Administrator Will Blodgett, and Accounting Clerk/Administrative Specialist Michele Sharif. Also in attendance was Town of Jerome Legal Council John Gaylord from Gust Rosenfeld.

7:00PM 2. PROCLAMATIONS

7:00PM (0:43) A. Proclamation Proclaiming October as Domestic Violence Awareness Month
Mayor Barber will read or summarize the proclamation and present a copy to Verde Valley Sanctuary Board Member representative.

Mayor Barber read aloud proclaiming October as Domestic Violence Awareness Month.

7:04PM (4:51) B. Proclamation: Not in Our City; Taking a Stand Against Human Trafficking
The Mayor will read or summarize the proclamation. Members of the organization may be present.

Mayor Barber read aloud the proclamation Not in Our City; Taking a Stand Against Human Trafficking. After reading the proclamation Mayor Barber rearranged items on the agenda starting with Item 9 – New Business Item E.

7:59PM (59:01) 3. FINANCIAL REPORTS

Discussion/Possible Action

A. Financial Report and Detail Invoice Register Report for September, 2026
Council will consider and may approve the financial reports for month ending September 2026.

Mayor Barber introduced the financial reports. She pointed out that in the budget the sales tax is currently down in all three categories. She then entered a motion to approve the financial reports, receiving a second from Councilmember Dillenberg.
After calling the question the motion to approve carried by unanimous vote.

Motion to approve Financial Reports for September 2026

COUNCILMEMBER	MOTION	SECOND	AYE	NAY	ABSENT	ABSTAIN
BARBER	X		X			
DILLENBERG		X	X			
MOORE			X			
SHARIF			X			
SHEFFIELD			X			

7:59PM (59:44) 4. STAFF AND COUNCIL REPORTS

Discussion/Possible Action

A. Reports by the Town Manager / Clerk, Deputy Clerk, Utilities Clerk, Accounting Clerk, Public Works Director, Building Inspector, Library Director, Municipal Magistrate, Police Chief, Fire Chief and Council Members, Which in the Case of Council Member's Reports will be Limited to a Summary of Current Events and will Involve no Action

Council will consider and may approve the staff reports.

Mayor Barber introduced the Staff and Council reports deferring to Mr. Klein for further introduction.
Mr. Klein shared that in addition to his written report he had received a formal complaint in regard to the bidding for the wastewater treatment plant. He said it is with legal counsel to review, and recommendations will be presented at an upcoming meeting. He then shared a meeting upcoming on Friday regarding the retaining wall on 89A near the intersections of Gulch Rd, East Ave and Holly St. under the Jurisin house. He also shared that Councilmember-elect Miller, and he will be attending the Rural Transportation Policy Summit as an informal requirement for the Verde Ave grant of $3.5 Million.
Mayor Barber asked if anyone on Council had anything to report.
Councilmember Dillenberg moved to approve the staff and council reports, receiving a second from Mayor Barber. Upon calling the question the motion carried.

Motion to approve staff and council reports.

COUNCILMEMBER	MOTION	SECOND	AYE	NAY	ABSENT	ABSTAIN
BARBER		X	X			
DILLENBERG	X		X			
MOORE			X			
SHARIF			X			
SHEFFIELD			X			

After the vote, prior to moving on Mr. Klein pointed out Mayor Barber had not given her congratulations.
Mayor Barber apologized and congratulated Mr. Robert Vega on the Public Works crew for 4 years of service as of October 24, 2026. Then the meeting proceeded to the Zoning Administrator's report.

8:02PM (1:02:15) 5. ZONING ADMINISTRATOR'S REPORT/PLANNING & ZONING AND DESIGN REVIEW BOARD MINUTES

Information/Council Review

A. Report Provided by the Zoning Administrator. Minutes are Provided for Information Only and do Not Require any Action

Zoning Administrator Blodgett shared his written report adding in addition to that the Regional EPA Officer would be in town next week touring the town and buildings within the scope of the $1million Brownfields grant. He also shared that he has found a print house that successfully digitized a couple of our older maps so he would be preparing a proposal for the budget to get some of the older more fragile maps digitized to prevent further deterioration and preserve them for future use.

8:03PM (1:03:42) 6. APPROVAL OF MINUTES

Discussion/Possible Action

A. Consider Approval of the September 8, 2026, Regular Meeting Minutes, and the September 14th and September 28th, 2026, Special Council Meeting Minutes

Council will consider and may approve the September 8th, Regular and September 14th and 28th, Special Council Meeting minutes.

Mayor Barber introduced the meeting minutes. She said she noted a lot more typos on these minutes adding that it's been a busy month so she wouldn't be picky about it.
Councilmember Dillenberg made a motion to approve the meeting minutes.
Mayor Barber seconded the motion.
After the motion, but prior to the vote, Councilmember Sheffield noted that in the meeting minutes it states one of the speakers as Jason Voss, she corrected the record that the speaker was Jerome Resident Jason Hyman.
Mayor Barber then called the question and the meeting minutes for all three meetings were approved.

Motion to approve meeting minutes from the September 8, September 14, and September 28th, 2026, Council Meetings.

COUNCILMEMBER	MOTION	SECOND	AYE	NAY	ABSENT	ABSTAIN
BARBER		X	X			
DILLENBERG	X		X			
MOORE			X			
SHARIF			X			
SHEFFIELD			X			

7:39PM (39:05) 7. PETITIONS FROM THE PUBLIC

A. Pre-Registered Petition from the Public: Dan Mulleneaux of 681 Main Street, Locally Known as The Gibson Market

New Homeowner and Resident Dan Mulleneaux recently purchased the former Gibson Market at 681 Main St. He addressed Council regarding Gulch Ln, sharing that it's a roughly 75-foot-long, 10-foot-wide, Town-owned roadway providing access to his property and an adjacent residence. He requested that the Town consider conveying the roadway to him through a quitclaim deed, with permanent access retained for adjacent property owners, utilities and emergency vehicles. He said in exchange he and his wife would assume responsibility for paving, maintenance, drainage, and liability. He further explained that paving estimates ranged from $14,000 - $19,000, with engineering costs potentially adding another $14,000, making improvements costly under the current arrangement.
Mr. Mulleneaux cited public safety and access concerns, including difficult travel for vehicles and pedestrians, limited delivery and emergency vehicle access, and an incident in which a resident and neighbor recovering from emergency surgery had to be carried down to an ambulance. He noted that rain frequently washes rock and debris onto Main St. (89A), creating traffic hazards and cleanup concerns.

Council directed staff to review the proposal with legal counsel and assess the requirements for consideration at a future meeting.

After the petition the meeting moved to 9 – New Business item G.

8:05PM (1:04:59) 8. UNFINISHED BUSINESS

Discussion/Possible Action

A. Discussion and Possible Action / Staff Direction Regarding the Middle Park Donation from the Richard J. Martin Trust; Expended by November 18, 2027 - ($0.00) Expended To-Date

Council will discuss, consider options, and may provide staff direction for expending the donated funds.

Council and the Town Manager discussed the status of the Middle Park donation from the Richard J. Martin Trust which must be expended by November 18, 2027. Mr. Klein shared that no funds have been expended to date and that this item would continue to appear on future agendas for updates or until the project is complete. He shared that his interaction with Brad Lancaster had indicated he was too busy to assist. Vice Mayor Moore said she'd continue to do further outreach to him.
Council discussed potential uses for the donation including identifying ADA-accessible park space. Vice Mayor Moore added it was always a dream for Richard to visit the park, and this would be a good addition in recognition of Richard Martin's wishes to enjoy the park despite being in a wheelchair.
Councilmember Sheffield suggested identifying a compliant accessible parking space, constructing a path to a picnic table or shaded seating area.
Vice Mayor Moore suggested terracing the hillside behind the community garden with berms or check basins to improve the appearance of the park and help manage water runoff.
Mr. Klein agreed to check with Town's engineers to evaluate the site and identify feasible locations if available for accessible parking and a compliant pathway. Staff will then provide information on feasible options for further consideration.
Council members agreed to visit the park on their own time and provide feedback to establish a priority list for the overall improvements. Discussions would continue during the Council's goal-setting meeting set to take place within the next 60 days.

9. NEW BUSINESS

Discussion/Possible Action

8:13PM (1:13:17) A. Consideration of the Jerome Chamber of Commerce Special Event Permit Application for the Annual Light up the Mountain Event

Council will consider and may approve the special event permit.

Mayor Barber introduced the application for consideration. She said the only thing on the application she questioned was the light up time.

Anastasia Darrah, Chamber President confirmed the time on the application covers the whole time, and that the park lighting will not happen at 9 pm, that time is on the application as a placeholder for those members of the public who hang around a little longer than all of the festivities.
Mayor Barber asked if there would still be the opportunity for her to say a few words to the public. Ms. Darrah confirmed that yes that would still happen.
Councilmember Sharif motioned to approve the special event permit, receiving a second from Vice Mayor Moore. Mayor Barber thanked the Chamber of Commerce for keeping these special events happening, noting it takes a lot of work behind the scenes to make these events happen. She then called the questions and the motion passed unanimously.

Motion to approve Special Event Permit for Annual Light up the Mountain.

COUNCILMEMBER	MOTION	SECOND	AYE	NAY	ABSENT	ABSTAIN
BARBER			X			
DILLENBERG			X			
MOORE		X	X			
SHARIF	X		X			
SHEFFIELD			X			

8:154M (1:14:57) B. Consideration of the Jerome Chamber of Commerce Special Event Permit Application for the Annual Town Dinner at Spook Hall

Council will consider and may approve the special event permit.

Mayor Barber introduced the second application for the Chamber of Commerce.
Councilmember Sharif motioned to approve the special event permit receiving a second from Mayor Barber. She also noted that this event is going to be on a Sunday this year where past events were on a Saturday. She shared that the Kid's Christmas party is also in the works for the morning of the potluck.
Mayor Barber called the question, and the motion to approve the special event permit carried.

Motion to approve Special Event Permit for Annual Town Dinner at Spook Hall.

COUNCILMEMBER	MOTION	SECOND	AYE	NAY	ABSENT	ABSTAIN
BARBER		X	X			
DILLENBERG			X			
MOORE			X			
SHARIF	X		X			
SHEFFIELD			X			

7:47PM (47:04) C. Consideration of Proposed Fire Department Bylaw Updates

Council will consider and may approve the staff proposed updates to the Fire Department bylaws.

The Fire Chief, Carl Whiting, confirmed that the department has followed the existing bylaws' procedure for presenting and voting on the proposed revisions, allowing more than a month for member review, commentary and feedback. Feedback was received from a few parties and was incorporated prior to submitting the draft to Council. Discussion focused on strengthening participation and accountability requirements, aligning conduct provisions with the Town's recently adopted personnel policy update, clarifying restrictions on gifts and potential conflicts of interest, and addressing the handling of department or Town-owned property. It was also clarified that medical equipment such as wheelchairs, crutches, walkers, etc. that the Department has to loan to the community are not affected by the bylaws and will remain available to community members that may need them. Council members raised questions about the gift provision and if it should include a specific monetary threshold. They also identified minor working and drafting issues to be corrected in the next draft for review.
Councilmember Sheffield stated that her job duties have increased and she's been focused on the Zoning Ordinance and would enter a motion to table this to the next meeting to give her time to read through and see if her questions could be answered just by reading the document. Councilmember Dillenberg seconded the motion to table.
Chief Whiting emphasized the importance of ensuring department members understand and consistently follow the bylaws to support safe, fair, and accountable operations.
Mr. Klein requested councilmembers forward any input, suggested changes, and corrections to the bylaws to Michele via email, within a week to be reviewed and incorporated as appropriate.
Mayor Barber called the question, and the Jerome Fire Department Bylaw update was tabled to the November meeting.

Motion to table to next meeting for further review and input.

COUNCILMEMBER	MOTION	SECOND	AYE	NAY	ABSENT	ABSTAIN
BARBER			X			
DILLENBERG		X	X			
MOORE			X			
SHARIF			X			
SHEFFIELD	X		X			

After the vote the meeting moved to item 3 – Financial Reports.

8:15PM (1:15:41) D. Discussion / Consideration of the Mayor's Proposal for a Town Yard Sale in the 300 Level Lot

Council will discuss and may provide staff direction.

Mayor Barber proposed holding a centralized community yard sales for Jerome residents at no charge to them. She suggested potentially twice annually, for example November and April, explaining that a shared location with parking and Town advertising would provide an opportunity for residents whose properties are not easily accessible for individual yard sales.
Discussions identified that the use of the 300-level lot would require a review of the lease agreement and consultation with the landlord.
Council members also discussed participant sign-ups, assigning designated spaces, parking, public safety, cleanup, and potential assistance from a local nonprofit organization for the Fire Department Auxiliary to organize and arrange for such an event. Zoning Administrator Blodgett offered to share his previous research as he'd had similar ideas for a swap meet-style event at the old high school. He described that participants would provide their own tables and equipment, manage their own sales, with limited assistance and coordination rather than full Town-provided services. Ultimately no event policies or dates were established.
Council directed staff to first determine whether the 300-level lot could be used and would accommodate the event, and if not to explore alternative locations. Mr. Blodgett agreed he would help develop options for Council's consideration at a future meeting. There was no vote or other action taken with this item.

7:07PM (6:53) E. Consider Appointment of Chad Hembrough to Fill the Vacant Board of Adjustment Position with a Term Expiring February 28, 2028

Council will consider and may make the appointment.

Mayor Barber introduced the possible appointment for Board of Adjustment. She asked Council if they had any questions or other commentary about the application.
Vice Mayor Moore entered a motion to approve the appointment receiving a second from Councilmember Dillenberg. Mayor Barber called the question and the motion carried unanimously.

Motion to approve appointment of Chad Hembrough to the vacant seat on Board of Adjustment.

COUNCILMEMBER	MOTION	SECOND	AYE	NAY	ABSENT	ABSTAIN
BARBER			X			
DILLENBERG		X	X			
MOORE	X		X			
SHARIF			X			
SHEFFIELD			X			

After the Vote the meeting moved to item 9 – New Business Item F

7:08PM (8:01) F. Consideration and Approval of the Content Contained in the Proposed Update and Complete Re-write of the Town of Jerome's Subdivision Code and Zoning Ordinance Including Landscape and Streetscape Design Elements; and Authorizing Staff to Place the First Reading of the Revised Subdivision and Zoning Code on the November 10, 2026, Council Meeting Agenda

Council will consider and may approve the content and provide authorization for the First Reading.

Mayor Barber introduced the proposed update and complete re-write of the Town of Jerome Subdivision Code and Zoning Ordinance, which included newly added landscaping and streetscape design standards. They discussed concerns regarding the residency requirement for board membership eligibility, livestock allowances in the agricultural zone, swimming pool regulations and how they may impact neighboring properties and the addition of

heavy industry as a conditional use. Staff and Planning Center representatives explained that the heavy industry designation clarifies existing use categories without changing established property rights, they also confirmed they would make the suggested changes to the board membership and regarding private swimming pools.

Councilmembers discussed multifamily housing, residential adaptive reuse, density caps, parking availability, traffic impacts, neighborhood character, and whether the proposed revisions adequately protect existing historic buildings while encouraging housing opportunities. Following the discussion the direction was given to cap multifamily dwellings at quadplexes, and it was also noted that conditional use review, existing lot coverage areas, setbacks, and minimum dwelling-size standards provide safeguards against adverse impacts.

Additional Council discussion addressed wireless communication towers, excavation and grading permits exceeding 10 cubic yards, and additional commentary about swimming pool and water-storage provisions. Staff and Planning Center representatives explained that State requirements may necessitate allowing wireless facilities in all zoning districts and that a separate comprehensive small-cell tower ordinance would be developed. Regarding the excavation and grading exceeding 10 cubic yards, the proposed language allows the Zoning Administrator to determine that a permit needs to be reviewed by Planning and Zoning rather than requiring a review for every instance of grading or excavation.

Staff was directed to incorporate all of the discussed revisions and place the first reading of the revised Subdivision and Zoning Ordinance on the November 10, 2026, meeting agenda.

Motion to approve Zoning Code re-write with proposed changes, and authorize the first reading on November Meeting Agenda.

COUNCILMEMBER	MOTION	SECOND	AYE	NAY	ABSENT	ABSTAIN
BARBER						
DILLENBERG	X					
MOORE						
SHARIF		X				
SHEFFIELD						

After the vote the meting moved to Item 7 – Petitions from the public

7:45PM (45:00) G. Consider Removing from the Table and Further Discussion / Possible Staff Direction Regarding Park Closure Times, Dogs and Alcohol in the Parks and on the Steps, and Other Park and Noise Ordinance Policy Considerations

Council will remove the item from the table, and may discuss and consider alternatives, along with providing staff direction.

Mayor Barber entered a motion to remove the item for consideration from the table, stating at that meeting new council members will be seated for the next two years. A second was received from Vice Mayor Moore. By unanimous vote the motion carried.

Motion to remove from the table

COUNCILMEMBER	MOTION	SECOND	AYE	NAY	ABSENT	ABSTAIN
BARBER	X		X			
DILLENBERG			X			
MOORE		X	X			
SHARIF			X			
SHEFFIELD			X			

Mayor Barber then entered a motion to table the item to the next meeting. Councilmember Sharif seconded the motion, and the motion carried by unanimous vote.

Motion to table to November meeting.

COUNCILMEMBER	MOTION	SECOND	AYE	NAY	ABSENT	ABSTAIN
BARBER	X		X			
DILLENBERG			X			
MOORE			X			
SHARIF		X	X			
SHEFFIELD			X			

DRAFT

7:46PM (46:17) H. Consider Removing from the Table and Further Discussion Regarding the Installation of Security Cameras on Public Safety Facilities

Council will remove the item from the table, and may discuss staff's proposal regarding the installation of security cameras.

Mayor Barber entered a motion to remove the item for consideration from the table, stating that next month's meeting there would be a full council. A second was again received from Vice Mayor Moore. By unanimous vote the motion carried.

Motion to remove from the table.

COUNCILMEMBER	MOTION	SECOND	AYE	NAY	ABSENT	ABSTAIN
BARBER	X		X			
DILLENBERG			X			
MOORE		X	X			
SHARIF			X			
SHEFFIELD			X			

Mayor Barber then entered a motion to table the item to the next meeting. Councilmember Sharif seconded motion and by unanimous vote the item was table to the November meeting.

Motion to table to November meeting.

COUNCILMEMBER	MOTION	SECOND	AYE	NAY	ABSENT	ABSTAIN
BARBER	X		X			
DILLENBERG			X			
MOORE			X			
SHARIF		X	X			
SHEFFIELD			X			

After the vote the meeting moved to 9 – New business item C.

8:22PM (1:22:55) I. Consider Approval of Change Orders #1, #2, and #3, for the Gulch Drainage Project Totaling $42,980.60, Bringing the Total Project and Final Invoice Cost to $154,562.47 from the Original Contract Amount of $133,194.68, Which Includes Unused Contingencies and Other Credits

Council will consider and may approve the change orders.

Mayor Barber introduced the Change Orders totaling $42,980.60.
Mr. Klein explained that unused contingencies and other credits reduced the original contract amount of $133,194.68 to $111,581.87 before the change orders, resulting in a final project cost of $154,562.47. He attributed additional costs to the Town's unique topography and site conditions, noting that the final cost remained well below the second-lowest bid. He reported that the drainage improvements were functioning well, with additional improvements dependent on future funding.
Councilmember sharif Moved to approve the Change Orders, receiving a second from Councilmember Dillenberg. Mayor Barber called the question, and the motion carried by unanimous vote.

Motion to approve change orders 1, 2 and 3 for Gulch Drainage Project.

COUNCILMEMBER	MOTION	SECOND	AYE	NAY	ABSENT	ABSTAIN
BARBER			X			
DILLENBERG		X	X			
MOORE			X			
SHARIF	X		X			
SHEFFIELD			X			

8:25PM (1:25:45) 10. TO AND FROM THE COUNCIL

Council may direct staff regarding items to be placed on a future agenda.

Mayor Barber introduced To and From the Council, starting with the far end of the Dais, Councilmember Sharif, Councilmember Dillenberg and Vice Mayor Moore had no updates.
Councilmember Sheffield raised the possibility of establishing an official dog park stating that she would bring more specific information for future consideration. She initially suggested the horseshoe pit park as a potential location. Continued discussion included reports of continued use of the horseshoe pits and concerns about locating a dog park near the children's play area. No location was selected at this time.

Mayor Barber requested future discussion of playground improvements including replacement of the loose tire material with rubber mats due to concerns about potential toxicity and scattered material. She also reported that the chinaberry tree that used to shade the slide had to be removed by the Fire Department following storm damage and discovery that the tree was hollow. She expressed concern about the now-unshaded metal slide becoming too hot to the touch and suggested considering a pergola or other shade structure to replace the tree, or consider replacing the slide with a plastic one. She noted that no injuries occurred during the tree incident and that we are really lucky that nothing had happened to any kids or anyone there up to that point.

8:30PM (1:30:16) 11. ADJOURNMENT

Councilmember Dillenberg entered a motion to adjourn the meeting, receiving a second from councilmember Sharif. Mayor Barber called the question and the meeting adjourned at 8:30p.m.

Motion to adjourn at 8:30p.m.

COUNCILMEMBER	MOTION	SECOND	AYE	NAY	ABSENT	ABSTAIN
BARBER			X			
DILLENBERG	X		X			
MOORE			X			
SHARIF		X	X			
SHEFFIELD			X			

APPROVE:

Christina “Alex” Barber, Mayor

ATTEST:

Brett Klein, Town Manager

DRAFT

File Attachments for Item:

A. Pre-registered Petition from Jacob Giles

TOWN OF JEROME

POST OFFICE BOX 335, JEROME, ARIZONA 86331
(928) 634-7943

Petition to Speak

Name: Jacob Giles

Address: 37 Rich Street

Signature: Jacob E. Giles Date: _____

Topic/Comments: General Concerns

Pursuant to A.R.S. § 38-431.01(H), public comment is permitted on matters not listed on the agenda, but the subject matter must be within the jurisdiction of the commission. All comments are subject to reasonable time, place, and manner restrictions. All petitioners must fill out a request form with their name and subject matter. When recognized by the chair, please step to the podium, state your name, and please observe the three (3) minute time limit. No petitioners will be recognized without a request. The commission's response to public comments is limited to asking staff to review a matter commented upon, asking that a matter be put on a future agenda, or responding to criticism.

File Attachments for Item:

A. Consider First Reading of Ordinance No. 497; An Ordinance of the Town Council of the Town of Jerome Amending the Zoning Ordinance of the Town of Jerome, to Update, Modernize, and Substantially Revise the Provisions Thereof, Including Subdivision Code Regulations and Landscape and Streetscape Design Elements; and Providing for Penalties; and Providing for Severability

Council will consider and may approve the first reading of Ordinance No. 497.

TOWN OF JEROME

Founded 1876
Incorporated 1899

POST OFFICE BOX 335
JEROME, ARIZONA 86331
(928) 634-7943
www.jerome.az.gov

ORDINANCE NO. 497

AN ORDINANCE OF THE TOWN COUNCIL OF THE TOWN OF JEROME, ARIZONA, AMENDING THE ZONING ORDINANCE OF THE TOWN OF JEROME TO UPDATE, MODERNIZE, AND SUBSTANTIALLY REVISE THE PROVISIONS THEREOF, INCLUDING SUBDIVISION REGULATIONS AND LANDSCAPE AND STREETSCAPE DESIGN ELEMENTS; PROVIDING FOR PENALTIES; AND PROVIDING FOR SEVERABILITY.

WHEREAS, the Town Council of the Town of Jerome has amended the Zoning Ordinance of the Town of Jerome (the "Zoning Ordinance"), as needed, since it was first adopted in June 1977, and such amendments have ranged from correcting minor typographical errors to making significant revisions; and

WHEREAS, the Town Council desires to update and completely rewrite the Zoning Ordinance, including its subdivision regulations and landscape and streetscape design elements (the "Amendments"); and

WHEREAS, the Town Council has determined that the Amendments do not conflict with the Town of Jerome General Plan or any applicable specific area, neighborhood, or other plan; and

WHEREAS, in accordance with Article II, Sections 1 and 2 of the Constitution of Arizona, the Town Council has considered the individual property rights and personal liberties of the residents of the Town before adopting this ordinance; and

WHEREAS, in accordance with A.R.S. § 9-462.01, the Town Council has considered a housing impact statement that includes the information required by A.R.S. § 9-462.01(J)(1)-(3); and

WHEREAS, on October 6, 2026, the Planning and Zoning Commission held a public hearing on the Amendments and recommended approval thereof, with some revisions; and

WHEREAS, the Town Council finds that the Amendments recommended by the Planning and Zoning Commission are appropriate and in the Town's best interests;

NOW, THEREFORE, BE IT ORDAINED BY THE TOWN COUNCIL OF THE TOWN OF JEROME, YAVAPAI COUNTY, ARIZONA, AS FOLLOWS:

SECTION 1. The foregoing recitals are referred to, adopted, and made a part hereof as if fully set forth herein.

SECTION 2. That certain document entitled "Jerome Zoning Ordinance as Revised February 1997 and Updated Through October 2026," of which one paper copy and one electronic copy are maintained, in compliance with A.R.S. § 44-7041, on file in the office of the Town Clerk as required by A.R.S. § 9-802, and available for public use and inspection during normal business hours, is hereby declared to be a public record, which is hereby referred to, adopted, and made a part hereof as if fully set forth herein, and said copies are hereby ordered to remain on file with the Town Clerk.

SECTION 3. The Zoning Ordinance is hereby amended as set forth in the Amendments.

SECTION 4. If any section, subsection, sentence, clause, phrase, or portion of this ordinance or any part of the Amendments adopted herein by reference is for any reason held to be invalid or unconstitutional by the decision of any court of competent jurisdiction, such decision shall not affect the validity of the remaining portions thereof.

SECTION 5. The Mayor, the Town Manager, the Town Clerk, and the Town Attorney are hereby authorized and directed to take all steps necessary to carry out the purpose and intent of this ordinance.

SECTION 6. The Amendments include the following penalty provision:

> Section 110. Violation and Penalty.
> It is hereby declared to be unlawful to construct, erect, install, alter, change, demolish, maintain, or use any house, building, structure, or fence, or to use any lot or premise contrary to or in violation of any provision of this ordinance. Violations of any provision of the Zoning Ordinance of the Town of Jerome are subject to Chapter 18 Enforcement Procedures for Violations of the Town Code and Zoning Ordinance. Every such person, firm, or corporation shall be deemed guilty of a separate offense for each and every day in which such violation is committed, continued, or permitted, and shall be punished as provided in this section.

PASSED AND ADOPTED BY THE TOWN COUNCIL OF THE TOWN OF JEROME, YAVAPAI COUNTY, ARIZONA, THIS _____ DAY OF _____ 2026.

_____
Christina "Alex" Barber, Mayor

ATTEST:

_____
Brett Klein, Town Manager/Clerk

APPROVED AS TO FORM:

_____
Gust Rosenfeld P.L.C., Town Attorney
By: John A. Gaylord

Date of first reading: 11/10/2026 Dates of publication:
Date of adoption:
Voting record at adoption:

	MOVED	SECONDED	AYE	NAY	ABSENT	ABSTAIN
BARBER						
CHRISTENSEN						
MILLER						
MOORE						
SHEFFIELD						

JEROME ZONING ORDINANCE

AS REVISED FEBRUARY 1997

AND UPDATED THROUGH OCTOBER~~JULY~~ 2026~~4~~

UPDATES:

UPDATE	ORDINANCES INCLUDED	UPDATED BY
9/10/2012	290 (original re- adopting ordinance); 293, 298, 301,313,324,340,343,374,378, 380 *(Typographical error in Section 303.1 E corrected 1/14/2013)*	Candace B. Gallagher, CMC
12/17/2013	406, 407, 408 In addition, REMOVED provisions of Ordinance 343, which was repealed by voters in 2008, and reversed renumbering of Sections 503-511 that had been renumbered with that ordinance. Numeric references to those sections were corrected as well.	Candace B. Gallagher, CMC
10/2/2014	410	Candace B. Gallagher, CMC
1/30/19	442, 445	Candace B. Gallagher, CMC
2/21/19	446	Candace B. Gallagher, CMC
6/26/19	451	Candace B. Gallagher, CMC
9/17/19	453, 454	Candace B. Gallagher, CMC
11/6/19	457	Candace B. Gallagher, CMC
1/15/20	459	Candace B. Gallagher, CMC
8/31/20	460	Candace B. Gallagher, CMC
6/8/21	465, 472	Candace B. Gallagher, CMC
7/8/21	470	Candace B. Gallagher, CMC
10/20/21	474	Candace B. Gallagher, CMC
2/28/22	477	Candace B. Gallagher, CMC
3/29/22	478	Candace B. Gallagher, CMC
7/10/24	490	Candace B. Gallagher, CMC
10/13/26	497	The Planning Center

JEROME ZONING ORDINANCE 1997

COUNCIL
Paul Gross – Mayor
Alfredo Gutierrez
James A. Rome
Leo Sullivan
Helen Jane Troyer

PLANNING COMMITTEE
Richard Martin – Chairman
Larry Ahern – Vice Chairman
Mary Marc Armstrong
Barbara Hogan
John McNerney
Michael Smith
Jon Tudan

NACOG COMMUNITY PLANNING STAFF
Gary Millam – Division Chief
Matt Winkel – Project Mgr.
Ramon Bazurto – Graphics
Dolores Gonzales – Secretary
Alexandra Gallardo – Secretary

Northern Arizona Council of Governments

ORDINANCE NO. 177

ADOPTED JUNE 14, 1977

AN ORDINANCE OF THE MAYOR AND COUNCIL OF THE TOWN OF JEROME, ARIZONA, IMPOSING REGULATIONS, PROHIBITIONS, AND RESTRICTIONS FOR THE PROMOTION OF HEALTH, SAFETY, CONVENIENCE, AND WELFARE; REGULATING AND RESTRICTING HEIGHT, NUMBER OF STORIES, SIZE OF BUILDINGS AND OTHER STRUCTURES, THE PERCENTAGE OF LOT THAT MAY BE OCCUPIED, THE SIZE OF YARDS, COURTS, AND OTHER OPEN SPACES, THE DENSITY OF POPULATION, THE LOCATION AND USE OF BUILDINGS, STRUCTURES, AND LAND FOR TRADE, INDUSTRIAL, COMMERCIAL, RESIDENTIAL OR OTHER PURPOSES; ESTABLISHING STANDARDS OF PERFORMANCE AND DESIGN; AND FOR SUCH PURPOSES DIVIDING THE TOWN INTO DISTRICTS OF SUCH NUMBER, SHAPE, AND AREA AS MAY BE DEEMED BEST SUITED FOR THE PURPOSES HEREOF; AND ADOPTING A MAP OF SAID DISTRICTS; CREATING BOARDS AND DEFINING THE POWERS AND DUTIES OF SAID BOARDS; PRESCRIBING PROCEDURES FOR CHANGES OF DISTRICTS, CONDITIONAL USE PERMITS, VARIANCES, AND OTHER PERMITS; PRESCRIBING PENALTIES FOR VIOLATIONS OF SAID ORDINANCE; AND DECLARING AN EMERGENCY.

WHEREAS, it has been found necessary for the welfare of the Town of Jerome that a Zoning Ordinance shall be enacted; and

WHEREAS, by authority conferred by Title 9, Chapter 4, Article 6, Sections 1 through 6, Arizona Revised Statutes, 1956, and statutes amendatory thereto, the Town of Jerome is authorized and empowered to enact such an ordinance;

NOW, THEREFORE, BE IT ORDAINED BY THE COUNCIL OF THE TOWN OF JEROME as follows:

ZONING ORDINANCE
OF THE TOWN OF JEROME

~~Short Title ..... 101 ..... 7~~
~~Purpose ..... 102 ..... 7~~
~~Interpretation and Application ..... 103 ..... 7~~
~~Planning and Zoning Commission ..... 104 ..... 7~~
~~Board of Adjustment ..... 105 ..... 8~~
~~Design Review Board ..... 106 ..... 10~~
~~Zoning Administrator ..... 107 ..... 11~~
~~Enforcement ..... 108 ..... 11~~
~~Violation and Penalty ..... 109 ..... 12~~
~~Severability ..... 110 ..... 12~~

~~ARTICLE II - DEFINITIONS~~
~~General ..... 201 ..... 13~~

~~ARTICLE III - PROCEDURES~~
~~Amendments or Zone Changes ..... 301 ..... 23~~
~~Conditional Use Permits ..... 302 ..... 26~~
~~Site Plan Review ..... 303.1 ..... 30~~
~~Final Site Plan Review ..... 303.2 ..... 33~~
~~Grading and Excavation Requirements ..... 303.3 ..... 34~~
~~Appeals and Expiration of Approvals ..... 303.4 ..... 36~~
~~Design Review ..... 304 ..... 38~~
~~Administrative Appeals and Variances ..... 305 ..... 44~~
~~Neighborhood Meetings ..... 306 ..... 46~~

~~ARTICLE IV - ZONING DISTRICTS~~
~~Establishment of Zoning Districts ..... 401 ..... 49~~
~~Location and Boundaries of Districts ..... 402 ..... 49~~

~~ARTICLE V - USE REGULATIONS~~
~~Nonconforming Situations ..... 501 ..... 51~~
~~General Provisions ..... 502 ..... 53~~
~~General Provisions - Exterior Lighting ..... 502.1 ..... 59~~
~~"AR" Zone, Agricultural Residential ..... 503 ..... 67~~
~~"R1-10" Zone, Single Family Residential ..... 504 ..... 70~~
~~"R1-5 Zone, Single Family Residential ..... 505 ..... 73~~
~~"R-2" Zone, Single- and Two-Family Residential ..... 506 ..... 76~~
~~"C-1" Zone, General Commercial ..... 507 ..... 78~~
~~"I-1" Zone, Light Industrial ..... 508 ..... 82~~
~~Signs ..... 509 ..... 85~~
~~Parking and Loading Requirements ..... 510 ..... 93~~
~~Historic Overlay District ..... 511 ..... 96~~

~~ARTICLE VI - EMERGENCY CLAUSE ..... 97~~

~~APPENDICES ..... 99~~

ARTICLE I: ADMINISTRATION 87

SECTION 101. SHORT TITLE 87
SECTION 102. PURPOSE 87
SECTION 103. INTERPRETATION AND APPLICATION 87
SECTION 104. COMPUTATION OF TIME 87
SECTION 105. PLANNING AND ZONING COMMISSION 87

SECTION 106. BOARD OF ADJUSTMENT 98
SECTION 107. HISTORIC PRESERVATION/DESIGN REVIEW BOARD 1110
SECTION 108. ZONING ADMINISTRATOR 1211
SECTION 109. ENFORCEMENT 1211
SECTION 110. VIOLATION AND PENALTY 1211
SECTION 111. SEVERABILITY 1211

ARTICLE II: DEFINITIONS [REMOVED TO APPENDIX A WITH ORDINANCE 497] 1412

ARTICLE III: PROCEDURES 1513

SECTION 301. AMENDMENTS OR ZONE CHANGES 1513
SECTION 302. CONDITIONAL USE PERMITS 1916
SECTION 303.1. SITE PLAN REVIEW 2319
SECTION 303.2. FINAL SITE PLAN REVIEW 2622
SECTION 303.3. GRADING AND EXCAVATION REQUIREMENTS 2723
SECTION 303.4. APPEALS AND EXPIRATION OF APPROVALS 2925
SECTION 304. HISTORIC PRESERVATION/DESIGN REVIEW BOARD 3127
SECTION 305. ADMINISTRATIVE APPEALS AND VARIANCES 3733
SECTION 306. NEIGHBORHOOD MEETINGS 3935
SECTION 307. PRE-APPLICATION MEETINGS 4137

ARTICLE IV: ZONING DISTRICTS 4238

SECTION 401. ESTABLISHMENT OF ZONING DISTRICTS 4238
SECTION 402. LOCATION AND BOUNDARIES OF DISTRICTS 4238
SECTION 403. "AR" ZONE, AGRICULTURAL RESIDENTIAL 4339
SECTION 404. "R1-10" ZONE, SINGLE FAMILY RESIDENTIAL 4639
SECTION 405. "R1-5" ZONE, SINGLE FAMILY RESIDENTIAL 4839
SECTION 406. "R-2" ZONE, SINGLE- AND TWO-FAMILY RESIDENTIAL 5139
SECTION 407. "C–1" ZONE, GENERAL COMMERCIAL 5340
SECTION 408. "I-1" ZONE, LIGHT INDUSTRIAL 5740
SECTION 409. HISTORIC OVERLAY DISTRICT 6041
SECTION 410. USE MATRIX 6142
SECTION 411. USE/ZONE-SPECIFIC STANDARDS MATRIX 6445
SECTION 412. DEVELOPMENT STANDARDS MATRIX 7253

ARTICLE V: USE REGULATIONS 7455

SECTION 501. NONCONFORMING SITUATIONS 7455
SECTION 502. GENERAL PROVISIONS 7657
SECTION 502.1 GENERAL PROVISIONS – EXTERIOR LIGHTING 8665
SECTION 503. "AR" ZONE, AGRICULTURAL RESIDENTIAL 9877
SECTION 504. "R1-10" ZONE, SINGLE FAMILY RESIDENTIAL 10177
SECTION 506. "R-2" ZONE, SINGLE- AND TWO-FAMILY RESIDENTIAL 10577
SECTION 507. "C–1" ZONE, GENERAL COMMERCIAL 10777
SECTION 508. "I-1" ZONE, LIGHT INDUSTRIAL 11177
SECTION 509. SIGNS 11578
SECTION 510. PARKING AND LOADING REQUIREMENTS 12486
SECTION 511. HISTORIC OVERLAY DISTRICT 12890
SECTION 512. LANDSCAPE REQUIREMENTS 12890

ARTICLE VI: EMERGENCY CLAUSE 13698

ARTICLE VII: SUBDIVISION REGULATIONS 13799

SECTION 701. TITLE, PURPOSE, AND ADMINISTRATION 13799
SECTION 702. GENERAL REQUIREMENTS AND PROCEDURES FOR SUBMISSION OF PLATS 139101
SECTION 703. SPECIFICATIONS FOR PLANS AND PLATS 142104
SECTION 704. HILLSIDE SUBDIVISIONS 148109
SECTION 705. REVISIONS OF PLATS OR REPLATS 149110

SECTION 706. ABANDONMENT OF A RECORDED SUBDIVISION OR REVERSION TO ACREAGE ..... 149~~110~~
SECTION 707. AMENDED SUBDIVISION MAPS ..... 150~~111~~
SECTION 708. SUBDIVISIONS WITHIN THREE (3) MILES OF TOWN ..... 150~~111~~
SECTION 709. DESIGN STANDARDS ..... 151~~112~~
SECTION 710. IMPROVEMENTS ..... 158~~119~~
SECTION 711. VARIANCE AND APPEALS ..... 162~~123~~
SECTION 712. LEGAL PROCEDURE, VIOLATION, PENALTIES AND REMEDIES ..... 162~~123~~
SECTION 713. AMENDMENTS ..... 163~~124~~
SECTION 714. ENFORCEMENT AND EFFECTUATION ..... 163~~124~~

APPENDICES ..... 164~~125~~

APPENDIX A DEFINITIONS ..... 164~~125~~

ARTICLE I: ADMINISTRATION

SECTION 101. SHORT TITLE

This ordinance shall be known as "The Zoning Ordinance of the Town of Jerome."

SECTION 102. PURPOSE

The purposes of this ordinance are to secure safety from fire, panic, and other dangers; to provide adequate light and air; to lessen congestion in the streets; to prevent the overcrowding of land; to avoid undue concentration of population, to facilitate the adequate provision of transportation, water, sewerage, schools, parks, and other public requirements; to provide for the social, physical, and economic advantages resulting from comprehensive and orderly planned use of land resources; and to otherwise promote the health, safety, convenience and general welfare of the citizens of the Town of Jerome, Arizona.

SECTION 103. INTERPRETATION AND APPLICATION

In its interpretation and application, the provisions of this ordinance shall be held to be minimum requirements for the promotion of a general~~comprehensive~~ plan, and for the promotion of the public health, safety, and general welfare. It is not intended by this ordinance to repeal, abrogate, annul- or in any way impair or interfere with existing provisions of other laws or ordinances, except those specifically repealed by this ordinance, or with restrictions placed upon property by covenant, deed, or other agreement between parties, provided that where this ordinance imposes a greater restriction on land, buildings or structures than is imposed or required by such existing provisions of law, ordinance, contract or deed, the provisions of this ordinance shall control.

A. DEFINITIONS

For the purpose of this ordinance, certain words and terms used herein are defined as follows: all words used in the present tense include the future tense; all words in the plural number include the singular number, all words in the singular number include the plural number, unless the natural construction of the wording indicates otherwise. The word "lot" includes the word "plot"; the word "building" includes the word "structure"; and the word "shall" is mandatory and not discretionary. Other words and phrases used in this ordinance shall have the meaning established in Appendix A: Definitions.

SECTION 104. COMPUTATION OF TIME

1. When calculating a period of time prescribed by this Ordinance, the day of the act, event, or decision that starts the time period is not counted.
2. Unless otherwise expressly stated, references to "days" mean calendar days.
3. If the final day of a period falls on a Saturday, Sunday, legal holiday, or other day when Town offices are closed, the period shall extend to the next business day.

SECTION 1054. PLANNING AND ZONING COMMISSION

B. COMPOSITION; TERMS OF MEMBERS; VACANCIES; COMPENSATION OF MEMBERS

A Planning and Zoning Commission was established upon adoption of the Jerome Zoning Ordinance. At the adoption of this ordinance, the Commission shall consist of five (5) members, each of whom shall be a resident of the Town of Jerome to be appointed by the Town Council. The members of the Commission shall serve for three (3) years, except as ~~hereinafter~~ provided by this Ordinance. In the event of a death, resignation, or removal from the Commission, the vacancy shall be filled by the Council for the unexpired term. Members of the Commission may, after a public meeting, be removed by the Council for inefficiency, neglect of duty, or unethical conduct in office. A Commission member who is absent four (4) regular meetings of a year, beginning March 1st and ending February 28th, shall be deemed to have vacated their~~his or her~~ appointment without further action being taken by the Commission or Council. All members shall serve without pay. However,

members of the Commission may be reimbursed for actual expenses incurred in connection with their duties upon authorization or ratification by the Commission and approval of such expenditures by the Town Council.

[Ord. No. 313; Ord. No. 445]

C. POWERS AND DUTIES

The Planning & ZoningIt ~~shall be the duty of the~~ Commission shall:

1. Prepare~~to formulate~~ and administer any lawful plan duly adopted by the Council for the present and future growth and development of the Town of Jerome pertaining to the use of land and buildings;
2. ~~for any purpose, to make or cause to~~C ~~be made a c~~onduct ongoing~~tinuous~~ studies~~y~~ of the best present and future use and location for ~~to which~~ land and buildings ~~shall be put~~ within the Town of Jerome and in cooperation with adjacent areas;
3. ~~, and to~~ Rrecommend to the Council revisions in such plans which, in the opinion of the Commission, are in~~for~~ the best interest of the citizens of the Town of Jerome;
4. ~~to~~ Hhold public hearings where necessary;
5. M~~to m~~ake recommendations to the Council on all matters concerning or relating to the creation of zoning districts, the boundaries thereof, the appropriate regulations to be enforced therein, and amendments of this ordinance;~~t~~
6. ~~1.~~C~~o c~~arry out the specific duties as prescribed by this ordinance, and ~~to~~ undertake all activities usually associated with ~~therewith~~ and commonly known as "Planning and Zoning". The Commission is also authorized to confer and advise with other city, county, regional, or state planning commissions.

D. SELECTION OF OFFICERS

The Commission shall elect a Chair and Vice Chair from among its own members, who shall serve for one (1) year and until their successors are elected and qualified. No individual may serve consecutively as Chair~~,~~ or ~~consecutively~~ as Vice Chair~~,~~ for more than two one-year terms. The Chair shall preside at all meetings and exercise all the usual rights, duties, and prerogatives of the head of any similar organization. The Chair shall have the power to administer oaths and to take evidence. The Vice Chair shall perform the duties of the Chair in the latter's absence or disability. Vacancies created by any cause shall be filled for the unexpired term by a new election.

[Ord. No. 410]

E. QUORUM; VOTING

Three (3) members shall constitute a quorum. The affirmative vote of three (3) members shall be required for passage of any matter before the Commission. The minutes of the meeting shall reflect the "ayes" and "nays" cast on a particular measure and shall reflect the vote of each member present. A member may abstain from voting upon a declaration that he has a conflict of interest, in which case such member shall take no part in the deliberation on the matter in question.

[Ord. No. 313]

F. RULES; REGULATIONS; RECORDS; MEETINGS

The Commission shall make and publish rules and regulations governing~~, to govern~~ its proceedings and ~~to provide for its~~ meetings, subject to Council approval. All meetings of the Commission shall be open to the public. The minutes and records of all Commission proceedings shall be kept and filed as public record in the office of the Town Clerk.

SECTION 10~~6~~5. BOARD OF ADJUSTMENT

A. ESTABLISHMENT; COMPOSITION; TERM OF MEMBERS; VACANCIES; COMPENSATION OF MEMBERS

There is hereby established a Board of Adjustment of the Town of Jerome, to consist of five (5) members, each of whom shall be a resident of the Town of Jerome, to be appointed by the Town Council. The members of the Board shall serve for three (3) years, except as ~~hereinafter~~ provided in this Ordinance. The members of the first Board appointed hereunder shall serve for the following terms: two (2) members shall be appointed for a term of one (1) year, two (2) members shall be appointed for a term of two (2) years, and one (1) member shall be appointed for a term of three (3) years. In the event of a death, resignation, or removal from the Board, the vacancy shall be filled by the Council for the unexpired term. Members of the Board may, after a public hearing, be removed by the Council for inefficiency, neglect of duty, or malfeasance in office. For any reason other than absence, the Council shall file a written statement of the reasons for removal. A Board member who is absent four (4) regular meetings of a year, beginning March 1st and ending February 28th, shall be deemed to have vacated their~~his or her~~ appointment without further action being taken by the Board or Council. All members shall serve without pay. However, members of the Board may be reimbursed for actual expenses incurred in connection with their duties upon authorization or ratification by the Board and approval of such expenditures by the Town Council.

[Ord. No. 445]

B. POWER AND DUTIES

1. It shall be the duty of the Board of Adjustment to:

   a. Hear and decide appeals in which it is alleged there is an error in an order, requirement, or decision made by the Z~~z~~oning A~~a~~dministrator in the enforcement of the zoning ordinance, and to reverse or affirm, wholly or partly, or modify the order, requirement, or decision of the Z~~z~~oning A~~a~~dministrator appealed from, and make such order, requirement, decision or determination as necessary.

   b. Hear and decide appeals for variances from the terms of the zoning ordinance only if, because of special circumstances applicable to the property, including its size, shape, topography, location, or surroundings, the strict application of the zoning ordinance will deprive such property of privileges enjoyed by other property of the same classification in the same zoning district. Any variance granted is subject to such conditions that~~as~~ will assure that the ~~adjustment authorized~~authorized adjustment shall not constitute a grant of special privileges inconsistent with the limitations upon other properties in the vicinity and zoning in which such property is located.

2. The Board of Adjustment may not:

   a. Make any changes in the uses permitted in any zoning classification or zoning district, or make any changes in the terms of the zoning ordinance, provided the restrictions in this paragraph shall not affect the authority to grant variances pursuant to this article.

   b. Grant a variance if the special circumstances applicable to the property are self-imposed by the property owner.

C. SELECTION OF OFFICERS

The Board shall elect a Chair and Vice Chair from among its own members, who shall serve for one (1) year and until their successors are elected and qualified. The Chair shall preside at all meetings and exercise all the usual rights, duties, and prerogatives of the head of any similar organization. The Chair shall have the power to administer oaths and to take evidence. The Vice Chair shall perform the duties of the Chair in the latter's absence or disability. Vacancies created by any cause shall be filled for the unexpired term by a new election.

[Ord. No. 410]

D. QUORUM; VOTING

Three (3) members shall constitute a quorum. The affirmative vote of three (3) members shall be required for passage of any matter before the Board. In this connection, the minutes of the meeting shall reflect the "ayes" and "nays" cast on a particular measure and shall reflect the vote of each

member present. A member may abstain from voting only upon a declaration that he has a conflict of interest, in which case such member shall take no part in the deliberation on the matter in question.

E. RULES; REGULATIONS; RECORDS; MEETINGS

The Board shall make and publish rules and regulations to govern its proceedings and to provide for its meetings. All meetings of the Board shall be open to the public. The minutes and records of all Board proceedings shall be kept and filed as public record in the office of the Town Clerk.

SECTION 1076. HISTORIC PRESERVATION/DESIGN REVIEW BOARD

A. PURPOSE

The purpose of the Historic Preservation/Design Review Board is to review the exterior design of new buildings and structures, the alteration of buildings and structures, signs, and proposed demolition of structures~~, within the Historic Overlay District~~, in order to ensure that new development is compatible with the surrounding environment, and to preserve and protect the historic character of the Town of Jerome in accordance with the provisions of Section 304.

[Ord. No. 470]

B. COMPOSITION; TERMS OF MEMBERS; VACANCIES; COMPENSATION OF MEMBERS

The Historic Preservation/Design Review Board of the Town of Jerome shall be composed of five (5) members. The membership shall consist of five (5) residents of Jerome, who shall be persons qualified by design background, training, or experience, to be appointed by the Town Council. Each member shall serve for a term of three (3) years. Members may, after a public meeting, be removed by the Council for inefficiency, neglect of duty, or unethical conduct in office. A Board member who is absent four (4) regular meetings of a year, beginning March 1st and ending February 28th, shall be deemed to have vacated theirhis or her appointment without further action being taken by the Board or Council. In the event of death or resignation, or removal from the Board, the vacancy shall be filled by the Council for the unexpired term. All members shall serve without pay. However, members of the Board may be reimbursed for actual expenses incurred in connection with their duties upon authorization or ratification by the Board and approval of such expenditures by the Town Council.

[Ord. No. 313; Ord. No. 378; Ord. No. 410; Ord. No. 445; Ord. No. 459]

C. POWERS AND DUTIES

1. The Historic Preservation/Design Review Board shall have the power to approve, conditionally approve, or disapprove all requests for design approval as required by this Ordinance, basing its decision on the criteria as set forthdown in Section 304.
2. It shall be the responsibility of the applicant to prove that the intent and purpose established in this Section will be accomplished.
3. The Historic Preservation/Design Review Board, upon hearing an application, may impose such reasonable conditions as it may deem necessary in order to fully carry out the provisions and intent of this ordinance. Violation of any such condition shall be a violation of this ordinance, and such violation shall render any building permit null and void.

D. SELECTION OF OFFICERS

The Board shall elect a Chair and Vice Chair from among its own members, who shall serve for one (1) year and until their successors are elected and qualified. No individual may serve consecutively as Chair, or ~~consecutively~~ as Vice Chair, for more than two one-year terms. The Chair shall preside at all meetings and exercise all the usual rights, duties, and prerogatives of the head of any similar organization. The Chair shall have the power to administer oaths and to take evidence. The Vice-Chair shall perform the duties of the Chair in the latter's absence or disability. Vacancies created by any cause shall be filled for the unexpired term by a new election.

[Ord. No. 410]

E. QUORUM; VOTING

Three (3) members shall constitute a quorum. The affirmative vote of three (3) members shall be required for the passage of any matter before the Board. The minutes of the meeting shall reflect the

"ayes" and "nays" cast on a particular measure and shall reflect the vote of each member present. A member may abstain from voting upon declaration that he has a conflict of interest, in which case such member shall take no part in the deliberation on the matter in question.

[Ord. No. 313]

F. RULES; REGULATIONS; RECORDS; MEETINGS

The Board shall make and publish rules and regulations governing and providing forto govern its proceedings and to provide for its meetings, subject to Council approval. All meetings of the Board shall be open to the public. The minutes and records of all Board proceedings shall be kept and filed as public record in the office of the Town Clerk.

SECTION 1087. ZONING ADMINISTRATOR

A. CREATION; APPOINTMENT

There is hereby created the office of Zoning Administrator of the Town of Jerome, who shall be appointed from time to time by the Mayor and Council.

B. POWERS AND DUTIES

The Zoning Administrator shall:

1. Enforce the Zoning Ordinance.
2. Accomplish all administrative actions required by the Ordinance.
3. Undertake preliminary negotiation with, and provide advice to, all applicants for zoning adjustment action, use permits, design review, or other action of the Planning and Zoning Commission or Historic Preservation/Design Review Board.
4. Subject to general and specific policy laid down by the Planning and Zoning Commission and Town Council, interpret the Zoning Ordinance to members of the public, Town departments, and other branches of government.

SECTION 1098. ENFORCEMENT

This ordinance shall be enforced by the Zoning Administrator who shall enforce this ordinance, and in no case shall grant permission for the issuance of any permit for the construction, reconstruction, alteration, demolition, movement, or use of any building, structure, lot, or parcel if the building or structure as proposed to be constructioned, reconstructioned, alterationed, or used or moved or the lot or parcel as proposed to be used would be in violation of any of the provisions of this ordinance. A permit may be issued despite such a violation only if the Board of Adjustment, unless directed to issue such permit by the Board of Adjustment afterthrough an interpretation of thise ordinance or the granting of a variance, directs the Zoning Administrator to do so or by the Town Council after lawful amendment of this ordinance.

SECTION 11009. VIOLATION AND PENALTY

It is hereby declared to be unlawful to construct, erect, install, alter, change, demolish, maintain, or use any house, building, structure, or fence, or to use any lot or premise contrary to or in violation of any provision of this ordinance. VAny person, firm, or corporation, violationsng of any of the provisions of the Zoning Ordinance of the Town of Jerome are subject to Chapter 18 Enforcement Procedures for Violations of the Town Code and Zoning Ordinance. shall be guilty of a misdemeanor and upon conviction thereof, shall be punished by a fine of not more than three hundred dollars ($300.00) or by imprisonment in the Town jail for not more than ninety (90) days, or by both such fine and imprisonment. Every such person, firm, or corporation shall be deemed guilty of a separate offense for each and every day in which such violation is committed, continued, or permitted, and shall be punished therefore as herein before provided in this section.

SECTION 1110. SEVERABILITY

If any part of "The Zoning Ordinance of the Town of Jerome" is found to be invalid or unconstitutional by any Court, such action shall not apply to the ordinance as a whole. and It is

intended and declared that all parts of said "Zoning Ordinance of the Town of Jerome" shall continue in full force and effect except~~not~~ for those expressly declared to be invalid or unconstitutional. ~~shall continue in full force and effect not withstanding so much thereof as may be declared to be invalid or unconstitutional.~~

~~ARTICLE II~~ARTICLE II: ~~DEFINITIONS~~ DEFINITIONS [REMOVED]

[CODIFIER'S NOTE: This Article was rewritten with Ordinance 497 and moved to Appendix A.]

ARTICLE III: PROCEDURES

SECTION 301. AMENDMENTS OR ZONE CHANGES

A. PURPOSE

The Council may, from time to time, ~~as the public necessity, convenience, general welfare, or good zoning practice requires,~~adopt changes to the zoning district boundaries or amend, change, repeal, or supplement the regulations of the Zoning Ordinance of the Town of Jerome~~herein established~~. Such change or amendment may be initiated by the Council or the Commission on its own motion or by petition of one or more owners of real property within the area proposed to be changed.

B. PETITIONS FOR AMENDMENTS OR ZONE CHANGES

1. Petitions for change of district boundaries or amendment of regulations shall be filed with the Zoning Administrator by an owner of real property within the area proposed to be changed. Per Section 307, a pre-application meeting with Town Staff is required prior to submittal of an application. In the case of an application~~petition~~ requesting a zoning district change ~~which~~ that includes ~~other~~ property ~~in addition to that~~ owned by others, not including the petitioner, the petition shall include the signatures of all ~~the~~ real property owners ~~representing at least seventy-five (75) percent~~ of the land in the area proposed to be changed. ~~Such a~~All petitions ~~shall be filed on a form provided for the purpose and~~ shall include:

    a. A map showing the particular property or properties for which the change of zone is requested and ~~substantially the~~ adjoining properties, ~~and the~~ public streets, and ~~ways~~rights-of-way within ~~a radius of~~ three hundred (300) feet of the exterior boundary of the area proposed to be changed~~ies thereof~~.

    b. A Tentative Development Plan, which shall show the following:

        1) Topography.

        2) Proposed street system.

        3) Proposed block layouts.

        4) Proposed reservation for parks, parkways, playgrounds, recreation areas, and other open spaces.

        5) Off-street parking space.

        6) Types and uses of structures.

        7) Locations of structures, garages, and/or parking spaces.

        8) A tabulation of the total number of acres in the proposed project and a percentage thereof designated for the proposed structures.

        9) Preliminary plans and elevations of the structure types.

    c. Reasons justifying the petition;

    d. A true statement revealing any conditions or restrictions of record ~~(if any)~~ which would affect the permitted "uses" of the property if rezoned as requested and the ~~data or~~ dates ~~(if any)~~ of expiration thereof; and

    e. Such photographs, drawings, and other supporting documents ~~(if any)~~ as the applicant may desire to present.

    f. Payment of a filing fee in an amount established by a schedule adopted by resolution of the Council and filed in the offices of the Town Clerk. No part of the filing fee shall be returnable. Payment of the filing fee shall be waived when the change or amendment is initiated by the Council or the Commission or when the petitioner is the Town, County, State, or Federal government.

~~f.~~

2. Within fourteen (14) ~~calendar~~ days ~~Upon~~ of receipt of an ~~complete~~ application ~~for amendment~~, the Zoning Administrator shall determine the completeness of the application. If the application is incomplete, the Zoning Administrator shall provide the applicant with a comprehensive list of the specific deficiencies in a written notice. A resubmittal of an incomplete application shall be reviewed for completeness within seven (7) days. If the application is determined to be complete, the Zoning Administrator shall forward the application to the Planning and Zoning Commission after conducting a substantive review of the complete application materials.

3. Any plan approved by the Zoning Administrator under the provisions of Section 303 must substantially conform to the Tentative Development Plan submitted as part of the petition for a change of district boundaries.

C. COMMISSION ACTION

1. Upon receipt of any complete application for, and prior to holding a public hearing on, ~~rezoning or ordinances~~ actions that impose a new land use regulation or modify an existing land use regulation, a Neighborhood Meeting may~~shall~~ be required in accordance with Section 306 of this zoning ordinance.

2. After a Neighborhood Meeting has been held, if applicable, in accordance with Section 306, t~~T~~he Zoning Administrator~~Commission~~ shall then ~~fix~~ choose a reasonable time for the hearing ~~of the proposed zone change, amendment, or addition,~~ and shall give notice ~~thereof~~ to interested parties and to the public by publication of a notice in ~~a the official~~ newspaper of general circulation in the Town of Jerome~~the Town~~, and by posting one notice of the hearing on the area of the property requesting ~~the area included in~~ the proposed change, not less than fifteen (15) days prior to the hearing. The notice shall set forth the time and place of the hearing, including a general explanation of the matter to be considered, and ~~including~~ a general description of the area affected.

~~4.~~3. The Commission may recommend approval or denial to the Council, or ~~for any reason, when it deems such action necessary or desirable,~~ continue the application and~~such~~ hearing to a time and place certain. T~~Within thirty (30) days after the close of the hearing, t~~he Commission shall render its decision in the form of a written recommendation to the Council, which may be via a request for Council action or via the transmission of the Commission meeting minutes to Council. ~~The recommendation shall include the reasons for the recommendation.~~

~~5.~~4. Prior to publishing a petitioned Zoning Map change, the Commission may, on its own motion, delimit or extend the boundaries of such area, so as to constitute a more reasonable zone district boundary.

~~6.~~5. The Commission may, on its own motion, propose any amendments to this ordinance and map. After holding a public hearing as required by this section, the Commission shall either:

a. Transmit such proposal to the Council, which shall then~~reupon~~ proceed in accordance with the procedures~~as set forth herein~~ of this Ordinance for any other amendment;~~,~~ or

b. Vote to quash the Commission~~-~~initiated proposal, in which case no further action need be taken by the Commission or Council.

[Ord. No. 406]

D. COUNCIL ACTION

1. The Council shall, within forty-five (45) days after the Commission action, ~~Once the Commission has held a public hearing, the Council may adopt the recommendations of the Commission~~

~~without holding a public hearing if there is no objection, request for public hearing, or other protest. The Council shall~~ hold a public hearing ~~if requested by the party aggrieved or any member of the public or of the governing body~~on the request. Notice of the time and place of the hearing shall be provided in accordance with S~~given in the time and manner provided for the giving of notice of the hearing by the Commission as specified in Subs~~ection 301.C.2 of this Ordinance. In addition, the Town may give notice of the hearing in such other manner as it may deem necessary or desirable.

2. If the owners of twenty (20) percent or more of the property within the zoning area, as defined by A.R.S. § 9-462.04 as the area within one hundred fifty feet, including all rights-of-way, of the affected property subject to the proposed amendment or change or change...~~either of the area of the lots included in a proposed change, or of those immediately adjacent in the rear or any side thereof extending one hundred fifty (150) feet therefrom, or of those directly opposite thereto extending one hundred fifty (150) feet from the street frontage of the opposite lots~~, file a protest in writing against a proposed amendment or zone change, it shall not become effective except by the favorable vote of three-fourths (3/4) of all members of the Council. If any members of the Council are absent or unable to vote on such a question because of a conflict of interest, then the required number of votes for passage of the question shall be three-fourths (3/4) of the remaining membership of the Council, providing that such required number of votes shall in no event be less than a majority of the full membership of the legally established governing body.

~~3. If the Council's recommendation is to overrule the recommendation of the Commission, such decision shall require the vote of a majority of the number of members of the Council who are present and qualified to vote on the matter. For example, if one Council member is disqualified from voting due to a conflict of interest, a majority of the remaining four members would be required to overrule the recommendation.~~

~~4.~~3. The Council may approve, deny, or continue the application and hearing to a time and place certain by a vote of a majority of the number of members of the Council who are present and qualified to vote on the matter. The Council ~~shall not~~may also remand ~~make any changes in any~~a proposal recommended by the Commission back to the Commission for further consideration. ~~until the proposed changes have been referred back to the Commission for a report., Failure of the Commission to file a report back to the Council within thirty (30) days from date of receipt of the recommended changes shall be deemed to be approval of the proposed change(s) as recommended by the Council.~~

~~5.~~4. At the time of rezoning, the Council shall establish a schedule for development of the specific use or uses for which rezoning is requested. The staff recommendation for rezoning requests that involve a zoning violation is a one-year period. For rezoning requests that do not involve a zoning violation, a five-year time period is recommended. A five-year time extension may be requested if the initial five-year time period expires. Requesting a time extension initiates a staff review to determine whether the request should be approved or denied, and whether conditions should be revised to reflect new conditions or practice. New conditions may be added during the staff review. The time extension request shall be noticed for a public hearing and heard only by the Council in accordance with the standards of this section. The Town Council may grant a time extension for a period of five years or less from the most recent public hearing on the case. If, at the expiration of this period, the property has not been improved for the use for which it was conditionally approved, ~~it~~ the ~~Mayor and~~ Council may elect to close the rezoning, in which case, it shall revert to its former zoning classification upon legislative action.

[Ord. No. 453]

E. RECONSIDERATION OF DENIED AMENDMENTS

I~~n the event that~~ a petition for an amendment is denied by the Council~~,~~ or is withdrawn after the Commission hearing, the Commission shall not consider the petition, ~~or~~ any other petition

seekingfor the same amendment for the same property or any part of itof this Ordinance as it applies to the same property described in the original petition, or any part thereof, forwithin a period of one (1) year from the date of such denial action. , Tunless this restriction does not apply if thee conditions upon which the original denial was based have changed.

F. EXCEPTIONS

In the event that a request for amendment concerns only the amendment of general requirements of this Ordinance, no signature of affected property owners or posting of property shall be required; provided, however, that all other provisions of this Section shall be complied with.

G. TIMEFRAME

The review periods specified in this Ordinance do not include time required for applicant responses, review of additional information, application revisions or corrections, and could vary due to public hearing notification requirements and other Town procedures. Review periods may be extended as reasonably necessary for projects involving complex technical, environmental, legal, or planning considerations.

SECTION 302. CONDITIONAL USE PERMITS

A. PURPOSE

~~Every zoning district contains certain buildings, structures and uses of land which are normal and complementary to Permitted Principal Uses in the district, but which, by reason of their typical physical or operational characteristics, influence on the traffic function of adjoining streets, or similar conditions, are often incompatible with adjacent activities and uses.~~ It is the intent of this Ordinance to permit Conditional Uses in appropriate zoning districts, but only in ~~specific~~ locations within such districts that can be designed and developed in a manner that~~which~~ assures maximum compatibility with adjoining uses. It is the purpose of this Section to establish principles and procedures ~~essential~~ to provide~~per~~ guidance and control of such uses.

B. GENERAL REGULATIONS

1. ~~Zoning district regulations established elsewhere in this Ordinance specify that~~ Certain buildings, structures and uses of land may be authorized by the Commission as Permitted Conditional Uses in a given district subject to the provisions of this Ordinance. ~~of this Section and to requirements set forth in district regulations.~~ The Planning and Zoning Commission is empowered to make recommendations to the Town Council regarding granting or denying applications for use permits and to impose reasonable conditions upon them. Prior to becoming effective, all actions by the Planning and Zoning Commission concerning a use permit application must be acted upon by the Town Council in accordance with the provisions of subsection 302.~~.~~E.

2. Any building, structure, or use existing on the effective date of this Ordinance which is reclassified by this Ordinance as a Permitted Conditional Use, ~~by this Ordinance~~ within~~for~~ the zoning district in which it is located, shall be deemed to satisfy~~considered as meeting~~ all~~the~~ conditions that~~which~~ would otherwise be imposed upon such use by this Ordinance.~~,~~ I~~ and it~~s continued operation~~ance~~ shall not be subject to issuance of a Conditional Use Permit; provided, however, to the extent that the building, structure, or use does not~~such fails to~~ conform to the requirements of this Ordinance, it shall be considered nonconforming as described in Section 501, and its continuance shall be governed by all applicable nonconforming use regulations ~~applicable thereto~~.

3. Every Conditional Use Permit issued shall be personal to the permittee and applicable only to the specific use and to the specific property for which it is issued. Use Permits may contain specific limitations on the scope, nature, and duration of the use, as well as transferability of the Use Permit, as deemed necessary to secure the objectives of this Ordinance. The conformance~~maintenance~~ to~~of~~ special conditions imposed by the Permit, as well as compliance with other provisions of this Ordinance, shall be the responsibility of the property owner.

C. CONDITIONAL USE PERMIT APPLICATION

1. The a~~A~~pplication for a use permit shall be filed with the Zoning Administrator on a form prescribed by the Zoning Administrator~~Commission~~.

2. ~~The application shall be forwarded to the Planning and Zoning Commission by the Zoning Administrator, and when required by the Commission,~~The Zoning Administrator shall provide guidance to the applicant regarding the preparation of the application to ensure it satisfies the intent of this Section. When required by the Zoning Administrator, the application shall be accompanied by a detailed site plan prepared in accordance with Section 303.1, showing all information necessary to demonstrate that the proposed use will comply with all special conditions as well as other regulations and requirements of this Ordinance. The applicant shall furnish any additional information the ~~Commission~~Zoning Administrator ~~any additional information~~may consider relevant to ~~investigation of the case~~ the evaluation of the application.

~~4.~~3. The application shall be reviewed in accordance with Section 301.B.2.

D. COMMISSION ACTION AND FINDINGS

1. Commission Action on Conditional Use Permit Applications is as outlined in Section 301.C, except that:

   a. ~~It is the express intent of this Ordinance that any use for which a Conditional Use Permit is required shall be permitted as a Principal Use in the particular zoning district, provided that all special conditions and requirements of this Ordinance are met. Therefore, the action of the Commission shall be one of approval or denial based upon its judgment as to whether the specified conditions have been or will be met.~~ In its review of the application, ~~T~~the Commission shall consider not only the nature of the use and the special conditions influencing its location in the particular district, but also the proposed location of buildings, parking and other facilities within the site, the amount of traffic likely to be generated and how it will be accommodated, and the influence that such factors are likely to exert on adjoining properties. The Commission may make such suggestions as it considers desirable ~~and shall provide all possible guidance to the applicant in his preparation of application, plans, and data in such manner as~~ to satisfy the intent of this Section. The applicant shall furnish the Commission with any additional information it may consider relevant to the evaluation of the application.

   ~~b. The Commission shall choose~~consider the application at their next regular meeting if the application was filed at least fifteen (15) days prior to such meeting. Otherwise it shall be carried over until the next regularly scheduled meeting. The Commission may reach a decision, continue the matter to a specified date (but not later than the next regularly scheduled meeting), or may set the matter for public hearing. Prior to holding a public hearing, a Neighborhood Meeting may be required in accordance with Section 306 of this Zoning Ordinance. If the Commission does set the matter for public hearing, notice thereof shall be given to the public by publication of a notice in the official newspaper of the Town and by posting the property included in the application not less than fifteen (15) days prior to the hearing. The notice shall set forth the time and place of the hearing and include a general explanation of the matter to be considered and a general description of the area affected.

   ~~c.~~b. In order to recommend approval of~~grant~~ any use permit, the ~~findings of the~~ Commission must find~~be~~ that the establishment, maintenance, or operation of the use or building applied for will not be detrimental to the public health, safety, and ~~peace, convenience, comfort, and general welfare of persons residing or working in the neighborhood of such proposed use or be detrimental or injurious to property and improvements in the neighborhood or to the~~ general welfare of the Town and its citizens.

   ~~d.~~c. The Commission may designate such conditions in connection with the use permit as it deems necessary to secure the intent and purposes of this ~~o~~Ordinance and may require guarantees and evidence that such conditions are being or will be complied with.

   ~~e.~~d. If the Commission finds that the application and supporting data do not indicate that all applicable conditions and requirements of this Ordinance will be met, it shall recommend denial of~~y~~ the permit. ~~Notice of denial, including reasons therefore, shall be mailed to the applicant at the address shown in the application, and the Commission shall report its actions to the Council at its next regular meeting.~~

~~5. If the Commission approves the application it shall direct the Zoning Administrator to draft a Conditional Use Permit setting forth all conditions and requirements governing such use, shall make the approved site plan a part of the record of the case, and shall submit the permit to the Town Council for action at the Council's next regular meeting, but.~~

~~6.~~1. ~~Failure of the applicant to comply with the conditions and safeguards which are a part of the terms under which a Conditional Use Permit is granted shall be deemed a violation of this Ordinance and punishable under Section 109.~~

E. COUNCIL ACTION

~~1. Upon receipt from the Zoning Administrator of a Planning and Zoning Commission recommended action on a Conditional Use Permit application, the Town Clerk shall place the permit on the regular Council meeting agenda first following the 15th day after approval of the permit by the Planning Commission.~~

1. The Council shall, within forty-five (45)~~fifteen (15)~~ days after the~~ir regular meeting or public hearing~~Commission action on a Conditional Use Permit, act on the recommendation of the Planning and Zoning Commission by either affirming, denying,~~reversing~~ or modifying the recommendation~~action~~ of the Planning and Zoning Commission. ~~-~~The Town Council may make a decision based on its own findings.

2. The Council may designate such conditions in connection with the permit as it deems necessary to secure the intent and purpose of this Ordinance and may require such guarantees and evidence that such conditions are being, or will be, complied with.

3. The Council's decision shall be final and shall become effective immediately. Notice of the decision shall be mailed to the applicant at the address shown in the application.

Failure of the applicant to comply with the conditions and safeguards ~~which~~that are a part of the terms under which a Conditional Use Permit is granted shall be deemed a violation of this Ordinance and punishable under Section 1101~~09~~.

~~3.~~4.

[Ord. No. 470]

F. TIME LIMITS

1. Use permits become effective immediately upon action by the Town Council.

2. Any use permit issued by the Town Council shall be commenced within six (6) months from the date of Council ratification, and diligently pursued, otherwise it shall become null and void.

3. No person shall reapply for the same or substantially the same use permit on the same or substantially the same plot, lot, or parcel of land within a period of one (1) year from the date of denial or revocation of said use permit.

4. An extension of approval may be granted by the Town Council if the applicant files for the extension prior to the approval becoming void ~~and the extension is granted by the t~~Town ~~e~~Council. The Town Council may grant up to two additional extensions provided the approval is in compliance with all ordinances and requirements in effect at the time of the extension request. An application for an extension shall be accompanied by a filing fee in an amount established by a schedule adopted by resolution of the Council and filed in the office of the Town Clerk.

[Ord. No. 470]

G. REVOCATION

Use permits granted in accordance with the provisions of this ordinance may be revoked if any of the conditions of terms of the permit are violated or if any law or ordinance is violated in connection ~~there~~with the permit.

The Zoning Administrator shall notify the permittee~~, by regular First-Class mail, of a violation or~~ by both Certified Mail and First-Class Mail of a violation or the termination of a use permit. If no attempt to change the violation is made within ~~fifteen~~ twenty (2015) days ~~after receipt of~~of the date the Zoning Administrator sends the notification, the permit shall be revoked and considered null and void. Notice shall be deemed served on the date that the notice is deposited in the United States Mail by Certified Mail and First-Class Mail to the permittee's address of record. Failure to accept or claim a mailed notice does not delay the 20-day period granted to address the violation.

Any use permit shall be considered null and void if construction does not conform to the originally approved site plan. SubstantialAny deviations requested from the originally approved site plan shall be processed as a new use permit. In the case of Conditional Use Permits, substantial deviations are any deviation from the originally approved permit that materially alters the intensity, location, design, operation, or impact of the approved use, as determined by the Zoning Administrator

[Ord. No. 470]

H. FEE

The application for a conditional use permit shall be accompanied by a filing fee in an amount established by a schedule adopted by resolution of the Council and filed in the office of the Town Clerk. No part of the filing fee shall be returnable. Payment of the filing fee shall be waived when the petitioner is the Town, County, State or Federal Government.

I. TIMEFRAME

See Section 301.G

[Ord. No. 406; Ord. No. 407; Ord. No. 470]

SECTION 303.1. SITE PLAN REVIEW

A. PURPOSE

The purpose of the site plan review is to provide for the public health, safety and general welfare, and to protect the environment and the historical character of the Town of Jerome. The plan review will include examination of all proposed site work and excavation and grading regulations, with special regulation of work on sites with extreme slope or unstable soils. Essential to this purpose is the review of possible impacts on surrounding properties.

[Ord. No. 293; Ord. No. 470]

B. PROJECTS REQUIRING REVIEW BY THE PLANNING AND ZONING COMMISSION AND COUNCIL

1. Additions and alterations to residential, commercial, or industrial structures.
2. Decks.
3. Grading, excavation, clearing, and grubbing in accordance with Section 303.3.
4. Lot splits and lot line adjustments.
5. Modifications to nonconforming structures.
6. New residential, commercial, or industrial structures.
7. Sheds and accessory structures.
8. Projects not specifically listed as exempt (Section 303.1.D) or requiring Zoning Administrator review per Section 303.1.C.

[Ord. No. 470]

C. PROJECTS REQUIRING REVIEW BY THE ZONING ADMINISTRATOR

1. Parking areas.
2. Patios.
3. Replacement of exterior stairs with metal or other fire-resistant materials, provided there is less than a 10 percent change in the original footprint. Approval by the Fire Inspector is also required.

[Ord. No. 470]

D. PROJECTS EXEMPT FROM SITE PLAN REVIEW

1. Repair, replacement, and maintenance of existing structures, provided that the same materials are used.

~~2. 1.2. Landscaping (not including accessory structures such as gazebos, pergolas, shade structures, and sheds).~~

[Ord. No. 470]

E. PROCEDURE

1. Site plan review may be accomplished by either the Zoning Administrator or the Planning and Zoning Commission and Council, depending on the project as noted in Sections 303.1.B and 303.1.C.
2. Applications for site plan review shall be submitted to the Zoning Administrator for review by the Building Inspector, Fire Inspector, Zoning Administrator, and ~~Planning and~~ other applicable reviewing bodies~~Zoning Commission~~. Once submitted, the Zoning Administrator shall have fourteen (14) calendar days from the date of submission of a site plan application to review said plan for completeness. If the application is incomplete, the Zoning Administrator shall provide the applicant with a comprehensive list of specific deficiencies in a written notice.

3. If the application is determined to be complete, the Zoning Administrator shall determine whether a public hearing is required for the application. If required, the Zoning Administrator shall forward the application to the Planning & Zoning Commission after conducting a substantive review of the complete application materials, and the application shall be processed in accordance with Section 302 of this Ordinance. ~~The site shall be posted according to a procedure outlined by the Zoning Administrator. Such posting will include, but not be limited to, proposed improvements and usage of said property and will commence fifteen (15) days prior to site plan review and remain until after final approval.~~ If the site plan can be reviewed and approved by the Zoning Administrator, then site posting and a neighborhood meeting ~~is~~ are not required, but the Zoning Administrator may request design review recommendations on the site plan from the Historic Preservation/Design Review Board.

4. The Zoning Administrator or the Council shall approve, conditionally approve, or deny a site plan application. Once denied, the original plan shall not be resubmitted.

5. The Historic Preservation/Design Review Board ~~Commission~~ approval of the design elements of the site plan is outlined in Section 304.

F. SITE PLAN CONTENT REQUIREMENTS

Site Plan Applications~~s submitted~~ shall include the following:

1. Site Plan Application Form

2. Written narrative of the proposed project (include uses, hours of operation, number of employees, etc.)

~~1.~~3. Plot plan or site layout; a~~A~~ directional north arrow; scale used; lot dimensions referenced to a legal description; and street dedications, easements and utilities, both public and private. When~~In cases where~~ the location of a property perimeter is unclear, the Building Inspector may require a boundary survey with ~~corners identified on the~~ ground-staked corners.

~~2.~~4. A vicinity sketch showing the location of the site in relation to the surrounding street system. Adjacent properties and their uses shall be identified.

~~3.~~5. Location, perimeter size, and use of all existing and proposed buildings and structures, as well as the number of stories of all proposed buildings and structures.

~~4.~~6. Size and dimensions of required yards and lot coverage for the zoning district and the space between buildings.

~~5.~~7. Location and height of all existing and proposed walls and fences.

~~6.~~8. Location, number of spaces, dimensions, circulation patterns, and surface materials for all off-street parking and loading areas proposed. All parking shall comply with Section 510 of the Jerome Zoning Ordinance.

~~7.~~9. Existing drainage. Show how proposed drainage will be directed, indicating both adequate disposal and protection of neighboring properties.

~~8.~~10. Natural features, such as rock outcroppings, trees over twelve (12) inches in diameter, washes, and man-made features such as existing roads and structures, walkways, and stairways, with indication as to which are to be retained, removed, or altered.

~~9.~~11. Existing and proposed grades, by spot grades or topographic representation. The Building Inspector may require a topographic survey and additional engineering.

a. Slopes exceeding thirty-five (35) percent shall require a topographic survey by a licensed engineer or surveyor. In addition, the applicant shall provide a satisfactory assessment by a licensed engineer regarding soil/geological stability, bearing qualities and drainage. If

indicated by this assessment, a structural engineer shall design all foundations and retaining structures.

b. Exceptions. The additional studies required in number 9(a) may be waived, if the dollar amount of the project does not require a licensed contractor according to A.R.S. 32-1121.

~~10.~~12. All proposed excavation and grading shall conform to Section 303.3 of this ordinance.

~~11.~~13. Any other information that the Zoning Administrator may find necessary to establish compliance with this and any other ordinances.

~~12.~~14. Application for sign permits shall be filed in accordance with the provisions of Section 509.

[Ord. No. 293; Ord. No. 470]

~~F.~~G. FEE

The application for Plan Approval shall be accompanied by a filing fee in an amount established by a schedule adopted by resolution of the Council and filed in the offices of the Town Clerk. No part of the filing fee shall be returnable. Payment of the filing fee shall be waived when the petitioner is the Town, County, State, or Federal government.

H. TIMEFRAME

See Section 301.G

[Ord. No. 293]

~~**G. REVIEW PROCEDURES**~~

~~Site plan review may be accomplished by either the Zoning Administrator or the Planning and Zoning Commission in accordance with the provisions of this section. Once submitted, the Zoning Administrator shall have fifteen (15) days from the date of submission of a site plan application to review said plan for completeness. If Planning and Zoning Commission review is required, a completed site plan shall be submitted for review by the commission at the next available meeting, if received by the submission deadline. The Zoning Administrator may request design review recommendation on the site plan. The Zoning Administrator or Planning and Zoning Commission shall approve, conditionally approve, or deny said plan. Once denied, the original plan shall not be resubmitted.~~

~~[Ord. No. 293; Ord. No. 470]~~

SECTION 303.2. FINAL SITE PLAN REVIEW

A. FINAL SITE PLAN PROCEDURES

If desired by the applicant or requested by the Planning and Zoning Commission or Town Council, projects may also be submitted for Final Site Plan Review. An application for a Final Site Plan shall be in accordance with Section 303.1 and shall ~~The~~ include the following information ~~shall be submitted~~:

1. Any additional features required as a result of engineering and/or soil studies;
2. Compliance with all applicable standards ~~the appropriate sections~~ of thise Zoning Ordinance. ~~for the Zoning District including:~~

   ~~a. Lot Area~~

   ~~b. Lot Width~~

   ~~c. Maximum Lot Coverage~~

   ~~d. Yard Requirements~~

   ~~e. Off-Street Parking and Loading~~

   ~~f. Building Height~~

   ~~g. Accessory Building Height~~

   ~~h. Any other property development standards specific to the zone.~~
3. Compliance with all applicable codes, including the Uniform Building Code.
4. Compliance with any conditions recommended by the Planning and Zoning Commission, Historic Preservation and ~~Commission~~Design Review Board, Building Inspector, Fire Inspector, and/or the Zoning Administrator from the previous review.

[Ord. No. 470]

B. REVIEW

~~1.~~ Review for a Final Site Plan is in accordance with Section 303.1.~~The final plan shall be checked for completeness by the Zoning Administrator within fifteen (15) days. A completed final plan shall be presented to the Planning and Zoning Commission and the Design Review Board, when necessary, at the earliest possible meetings.~~

1.

~~1. POST-APPROVAL PROCEDURETHE PLANNING AND ZONING COMMISSION MAY APPROVE, APPROVE WITH CONDITIONS, OR DENY. ONCE DENIED, THE ORIGINAL PLAN SHALL NOT BE RESUBMITTED.~~

~~2.~~C. ~~THE DESIGN REVIEW BOARD APPROVAL OF THE DESIGN ELEMENTS OF THE FINAL PLAN IS OUTLINED IN SECTION 304.~~

~~3.~~1. All copies of the approved plan, with any conditions from the approving board, shall be dated and signed by the Zoning Administrator. One (1) copy of said approved plan and conditions, together with a notification of all design review requirements and procedures, shall be distributed to the applicant, and one (1) copy shall be filed with the Building Inspector.

[Ord. No. 293; Ord. No. 470]

D. TIMEFRAME

See Section 301.G

SECTION 303.3. GRADING AND EXCAVATION REQUIREMENTS

All excavation and grading shall be performed in accordance with these provisions.

This section shall not affect existing legal uses of property or the right to continuation of such legal use. However, if a nonconforming use of a structure or land is discontinued for six (6) months, any further use shall comply with these requirements.

Where the combined proposed cut and fill exceeds ten (10) cubic yards, the applicant must obtain a separate grading permit from the Building Inspector. An assessment by a civil, structural, or soil engineer may be required to~~show~~ demonstrate site stability and ~~lack of~~ the absence of negative impact.

Six (6) months from the date of approval of a grading permit, the approval becomes void if the grading permit has not been issued.

Exploratory excavation of ten (10) cubic yards or less can proceed with the approval of the Zoning Administrator and Building Inspector. The applicant shall submit plans for approval by the Building Inspector~~Planning and~~ and Zoning Administrator~~Commission~~ for all excavation in excess of ten (10) cubic yards. The Zoning Administrator may determine that excavation in excess of ten (10) cubic yards requires review and approval by the Planning & Zoning Commission.

[Ord. No. 470]

A. APPROVAL PROCEDURE

1. Any person wishing to do any grading, filling, excavation, cutting, or other site earthwork shall submit plans, drawings, and supporting data, including the quantity of cut and the quantity of fill, and any other information required by the Zoning Administrator and/or Building Inspector. ~~The Planning and Zoning Commission will look for compliance with these requirements in making its decision.~~
2. Grading shall be done in conjunction with a site plan filed with the Zoning Administrator. ~~Such plan will be presented to the Planning and Zoning Commission at its next regularly scheduled meeting.~~ Grading, excavation, and fill shall not:
    a. adversely affect the lateral support of adjacent property or structures;
    b. increase the stresses in or pressures upon any adjacent or contiguous property;
    c. physically infringe on adjacent property;
    d. include detrimental excavation or stockpiling;
    e. be in a public right-of-way; or
    f. have a negative impact on existing drainage.
3. The effect of the proposal on scenic views will be considered for potential impact.
4. Where the slope exceeds thirty-five (35)~~,~~ percent, engineering reports shall be required under the Site Plan requirements of the Jerome Zoning Ordinance.

[Ord. No. 470]

B. POST-APPROVAL PROCEDURE

If approved by the Building Inspector and Zoning Administrator~~Planning and Zoning Commission~~, the activity will be carried out as stipulated in these requirements. The activities described below shall be performed by licensed contractors where required by law.

1. All grading and excavation shall be performed with safety precautions and any anti-erosion or drainage devices required by the Building Inspector.
2. Construction equipment parking and storage needs shall be identified, and provisions made not to interrupt normal traffic flow more than absolutely necessary.

3. Dust control measures shall be taken and loads covered to prevent spilling and blowing.
4. Fencing of hazardous sites shall be required.
5. Safety fencing to protect neighboring property may be required.
6. The Building Inspector may require adequate inspection and compaction control by an approved soil testing agency. This may include certification concerning the inspection of cleared areas and benches to receive fill and the compaction of fills.
7. Cuts shall be accomplished to blend scale, form, and visual character into the natural landforms and minimize exposed scars.
8. Cuts shall be adequately fenced.
9. Driveway slope shall not exceed fifteen (15) percent, where possible, within topographic constraints. In every case, driveways shall blend ~~in~~ with the surrounding natural colors~~,~~ and shall include~~have~~ adequate measures ~~taken~~ for runoff and drainage.
10. Fills shall be accomplished to blend scale, form, and visual character into the natural landforms and minimize exposed scars.
11. The Building Inspector may require further supporting data to ensure stability.

[Ord. No. 470]

C. RESPONSIBILITIES OF THE APPLICANT

1. The applicant, ~~his~~ their agent, contractor, or employee shall carry out the proposed work in accordance with the approved plans and specifications and in compliance with all Jerome Zoning Ordinance requirements.
2. During grading operations, the applicant shall be responsible for the prevention of damage to any street or drainage facilities or to any public utilities or services.
3. The applicant is responsible for the prevention of damage to adjacent propert~~l~~y, and no person shall excavate on land sufficiently close to the property line to endanger any adjoining public street, sidewalk, alley, or other public or private property prior to supporting and protecting such property from settling, cracking, or other damage that might result.
4. No modification of the approved grading, excavating, or fill plans may be made without the approval of the Building Inspector and Zoning Administrator~~Planning and Zoning Commission~~.
5. Neither the issuance of a permit or approval under these requirements, nor the compliance with anythe provision~~s hereof,~~ of or ~~with any~~ conditions imposed in the issued permi~~tt issued hereunder~~, shall relieve any person from responsibility for damage to other persons or property, nor impose any liability upon the Town of Jerome for damage to other persons or property.
6. An as-built plan including original ground surface elevations, as-built surface elevations, site drainage patterns, and location and elevations of all surface and sub-surface drainage facilities shall be submitted upon completion of work. If required by the Building Inspector, a civil engineer's certification shall be provided for the final plan.

SECTION 303.4. APPEALS AND EXPIRATION OF APPROVALS

A. APPEALS

1. Any applicant, person residing within 300 feet of ~~a~~the project ~~or proposed activity~~subject to the procedures in this Ordinance, or person adversely affected may appeal a decision of the Planning and Zoning Commission to the Town Council by filing a written notice of appeal with the Town Clerk not later than fifteen (15) days from the date of the commission's decision. If the appellant is not the applicant and resides beyond 300 feet of the project, the appellant shall clearly demonstrate how they might be adversely affected by the proposed project. Appeals of decisions by the Zoning Administrator are per Section 305 of this Ordinance.

2. When a written appeal is filed with the Town Clerk, the ~~Council shall evaluate the appeal at their next available regular or special meeting. Where an appeal has been filed, the Council may elect to set the matter for a public hearing~~Town Clerk shall promptly provide notice of such an application to the Zoning Administrator. The appeal shall state the grounds for appeal and demonstrate how the appellant has been aggrieved or affected by the decision. The Zoning Administrator shall review the appeal to validate its completeness within three (3) days of receipt. If the appeal is deemed defective, the Zoning Administrator shall notify the applicant of the type and nature of the defect or defects within one (1) day of making said determination. If an appeal is determined to be complete, the Zoning Administrator shall schedule the appeal for Council consideration no later than 45 days from the determination of an application's completeness. ~~such action is taken~~Once scheduled,~~,~~ a legal notice shall be published at least once in ~~a~~the official newspaper of general circulation within the ~~f the~~ Town of Jerome; the site shall be posted at least fifteen (15) days prior to the hearing date; and notice by First-Class mail shall be ~~mailed~~ given to property owners within 300 feet of the site. Notice shall also be given to the Planning and Zoning Commission and the appellant. The Zoning Administrator shall submit a report to the Council with all relevant information and set forth the reasons for action taken by the Planning and Zoning Commission.

3. An appeal may be filed by persons aggrieved or by any officer, department, board, or bureau of the municipality affected by a decision of the Zoning Administrator. Appeals will be forwarded to the Board of Adjustment by filing a written notice of appeal with the Zoning Administrator not later than fifteen (15) ~~-~~days from the date of the Zoning Administrator's decision.

[Ord. No. 470]

B. BUILDING PERMIT ISSUANCE; EXPIRATION OF APPROVAL

1. Six (6) months from the date of approval, a plan approval becomes void if a building permit has not been issued and/or work has not commenced.

2. A building permit shall not be issued by the Building Inspector until the fifteen (15) day appeal period has expired.

3. An extension of approval may be granted if the applicant files for an extension prior to the approval becoming void and the extension is granted by the approving board. The approving board may grant a second extension, provided the approval ~~is in~~ compli~~esance~~ with all ordinances and requirements in effect at the time of the extension request. Any additional extension requests require review by the Town Council. Application for an extension shall be accompanied by a filing fee in an amount established by a schedule adopted by resolution of the Council and filed in the office of the Town Clerk.

[Ord. No. 470]

C. VIOLATION AND ENFORCEMENT

1. Prior to the issuance of a building permit, the Building Inspector shall ascertain that the plans presented with the Building Permit application are in conformance with those plans approved by

the Town Council or Zoning Administrator~~Planning and Zoning Commission has approved plans that are in conformance to those presented with the Building Permit application~~ and that the time limitations imposed by this ordinance have not elapsed.

2. The Zoning Administrator shall ensure that all matters are undertaken according to the conditions of the approved plan. If, during the course of work, changes in the approved plan are necessitated by conditions found at the site, an appropriately licensed engineer's approval may be required for the modified plans. In the event of a violation, the Zoning Administrator shall notify the permittee, by mail, that he is in violation of the conditions of the approved plan. If there are no plans, approved by the Zoning Administrator, to eliminate the violation within fifteen (15) days after notification, the building permit shall be revoked and considered null and void.
3. If, thirty (30) days after written notification by the Zoning Administrator, the applicant is still in violation of this ordinance, the Zoning Administrator shall take appropriate legal action to abate the violation.

[Ord. No. 293; Ord. No. 470]

SECTION 304. HISTORIC PRESERVATION/DESIGN REVIEW BOARD

A. PURPOSE

The purpose of this section~~Design Review~~ is to enable the Historic Preservation/Design Review Board to review the exterior design of proposed new buildings and structures, proposed alterations of buildings and structures, proposed signs, and proposed demolition of structures~~, within the Historic Overlay District,~~ in order to ensure that new development is compatible with the surrounding environment, and to preserve and protect the historical character of the Town of Jerome. Design review provided by the Historic Preservation/Design Review Board is intended to promote and preserve Jerome's economic and environmental well-being, which depends exclusively upon its distinctive character, natural attractiveness, and overall architectural quality, which contribute substantially to its viability as a recreational and tourist center and which contributed to its designation as a National Historic Landmark. Design review~~Design Review~~ is intended to enrich the lives of all the citizens of Jerome by promoting harmonious, attractive, and compatible development, and is therefore considered to be in furtherance of the general welfare. ~~The provisions of this Section shall apply to all new construction, exterior alterations, demolitions, and signs, in the Historic Overlay District.~~

[Ord. No. 470]

B. APPLICATION

The provisions of this Section shall apply to all new construction, exterior alterations, demolitions, and signs.

~~B.~~C. PROJECTS REQUIRING REVIEW BY THE HISTORIC PRESERVATION/DESIGN REVIEW BOARD~~COMMISSION~~

1. Awnings and permanent~~s~~ signs
2. Additions and exterior modifications
3. Decks
4. Demolitions of existing structures
5. Fences and walls
6. New structures
7. Paint, stain, and similar coatings
8. Sheds and accessory structures
9. Projects not specifically listed as exempt or requiring Zoning Administrator review

[Ord. No. 470]

~~C.~~D. PROJECTS REQUIRING REVIEW BY THE ZONING ADMINISTRATOR

1. Changes in roof material or color, provided the new roof has limited reflectivity.
2. Parking areas.
3. Patios.
4. Replacement of exterior stairs with metal or other fire-resistant materials, provided there is less than a 10 percent change in the original footprint and the change is approved by the Fire Inspector.
5. Window and door replacement, provided the new window or door replicates the same size and style of the window or door being removed.

[Ord. No. 470]

~~D.~~E. PROJECTS EXEMPT FROM DESIGN REVIEW BY THE HISTORIC PRESERVATION/DESIGN REVIEW BOARD~~COMMISSION~~

Landscaping (not including accessory structures such as gazebos, pergolas, shade structures, and sheds), provided any grading and excavation is in compliance with Section 303.3.

~~and~~ Rrepair, replacement, and maintenance of existing structures, provided that the same materials are used.

Nothing in this section shall be construed to prevent the ordinary maintenance or repair of any exterior elements of any building or structure; nor shall anything in this article be construed to prevent the construction, reconstruction, alteration, or demolition of any such elements that the authorized municipal officers, i.e., Building Inspector, Town Engineer, etc., shall certify as required by public safety.

[Ord. No. 470]

~~E.~~F. REVIEW PROCEDURE

1. Applications for design review shall be submitted to the Zoning Administrator for review by the Building Inspector, Fire Inspector, Zoning Administrator, and Historic Preservation/Design Review Board in accordance with the provisions of this section. Review may be accomplished by either the Zoning Administrator or the Historic Preservation/Design Review Board, as stated in Section 304.C and 304.D. The Zoning Administrator shall have fourteen (14) days from the date of submission of a design review application to review said application for completeness. If the application is incomplete, the Zoning Administrator shall provide the applicant with a comprehensive list of the specific deficiencies in a written notice. If the application is determined to be complete, the Zoning Administrator shall forward the application to the Historic Preservation/Design Review Board after conducting a substantive review of the complete application materials.

2. Upon receipt of any complete application for design review, and prior to holding a public hearing, a Neighborhood Meeting may be required in accordance with Section 306 of the Zoning Ordinance of the Town of Jerome.

3. After a Neighborhood Meeting has been held, if applicable, in accordance with Section 306, the Zoning Administrator shall then choose a reasonable time for the hearing of the application, and shall give notice to interested parties and to the public by publication of a notice in a newspaper of general circulation in the Town of Jerome, and by posting one notice of the hearing on the subject property requesting the proposed change, not less than fifteen (15) days prior to the hearing. The notice shall set forth the time and place of the hearing, including a general explanation of the matter to be considered, and a general description of the area affected.

~~1.~~4. ~~Once submitted, the Zoning Administrator shall have fifteen (15) days from the date of submission of an application to review the application for completeness.~~ If a review is required by the Historic Preservation/Design Review Board, the application shall be submitted for review by the board at the next available meeting. If Site Plan Review is required according to Section 303, the application shall be submitted concurrently. The applicant shall receive approval from the Historic Preservation/Design Review Board prior to being scheduled for Site Plan Review by the Planning and Zoning Commission. The Historic Preservation/Design Review Board or Zoning Administrator shall approve, conditionally approve, or deny the application. Once denied, the original plan shall not be resubmitted.

~~2.~~5. When, in the opinion of the Historic Preservation/Design Review Board, upon hearing and considering all relevant information, a project is not in keeping with either the tenets of this ordinance or the Jerome General Plan, the project shall be denied by specific motion of the Historic Preservation/Design Review Board.

6. When approved, a~~A~~ll copies of the approved plan, including~~with~~ any conditions imposed by the reviewing body~~shown thereon or attached thereto~~, shall be dated and signed by the Zoning Administrator. One (1) copy of said approved plan and conditions, together with a notification of

all Design Review requirements and procedures, shall be distributed to the applicant, and one (1) copy shall be filed with the Building Inspector.

~~3.~~7. The Historic Preservation/Design Review Board shall utilize the current edition and applicable standards of the Secretary of the Interior's Standards for the Treatment of Historic Properties to evaluate applications for historic properties and structures.

[Ord. No. 470]

~~F.~~G. APPLICATIONS FOR APPROVAL AND PERMIT

1. A prescribed application form for Design Review approval shall be filed with the Zoning Administrator, which details the information that must be provided by the applicant, along with the plans and other documents that must be submitted.

2. An ~~prescribed~~ application ~~form~~ for the ~~*Approval of the Demolition, Partial Demolition or Removal*~~ demolition or removal of an e~~E~~xisting b~~B~~uilding or s~~S~~tructure shall be filed with the Zoning Administrator on a form prescribed by the Administrator, which details the information that must be provided by the applicant, along with the plans and other documents that must be submitted.

[Ord. No. 470]

~~G.~~H. FEE

The application for Design Review shall be accompanied by a filing fee in an amount established by a schedule adopted by resolution of the Council and filed in the offices of the Town Clerk. No part of the filing fee shall be returnable. Payment of the filing fee shall be waived when the petitioner is the Town, County, State, or Federal Government.

[Ord. No. 470]

~~H.~~I. REVIEW CRITERIA FOR NEW CONSTRUCTION

1. The Historic Preservation/Design Review Board and Zoning Administrator shall use the criteria below to review proposed applications for new construction. The Zoning Administrator, Historic Preservation/Design Review Board, and the applicant shall use photographs, lithographs, and other depictions of the Town of Jerome~~,~~ to support their findings. If photographs, etc., are unavailable, then the determination or finding shall be based on the works of a recognized historic preservation authority,~~;~~ such as, but not limited to, text~~-~~books or an architect/historian. Each of the following criteria must be satisfied before an application can be approved.

   a. PROPORTION – The relationship of the width of a building or structure to its height shall be visually compatible with~~to~~ buildings, structures, and places to which it is visually related

   b. OPENINGS – The relationship of the width of the windows and doors~~,~~ to the height of windows and doors in a building shall be visually compatible with buildings, structures, and places to which the building is visually related.

   c. PATTERN – The relationship of solids to voids in the facade of a building or structure shall be visually compatible with buildings, structures, and places to which it is visually related.

   d. SPACING – The relationship of buildings or structures to the open space between them~~it~~ and adjoining buildings shall be visually compatible with~~to~~ the buildings, structures, and places to which it is visually related.

   e. ENTRANCES, PORCHES, DECKS, AND PROJECTIONS – The height, projection, supports, and relationship to streets and sidewalks~~,~~ of entrances, porches, decks, awnings, canopies, and balconies of a building shall be visually compatible with~~to~~ the buildings, structures, and places to which it is visually related

   f. MATERIALS, TEXTURE, AND COLOR – The materials, texture, and color of the facade of a building or structure~~,~~ shall be visually compatible with the predominant materials, textures, and colors used in the building and structures to which it is visually related.

g. ROOFS – The roof shape of a building shall be visually compatible with the buildings to which it is visually related.

h. ARCHITECTURAL DETAILS – Doors, windows, eaves, cornices, and other architectural details of a building or structure shall be visually compatible with buildings and structures to which it is visually related.

i. ACCESSORY BUILDINGS - Garages, carports, and sheds shall be visually compatible with buildings, structures, and places to which they are visually related.

j. ACCESSORY FEATURES – Fences, walkways, decks, stairways, lighting, antennae, and other manmade structures shall be visually compatible with buildings, structures, and places to which they are visually related.

k. LANDSCAPING – Landscaping shall be visually compatible with the landscaping around the buildings, structures, and places to which it is visually related.

l. SCREENING – The proposed addition, alteration, or other changes shall be screened with appropriate materials and in an appropriate design so as to be visually compatible with related properties, when, in the opinion of the Historic Preservation/Design Review Board, all other means of assuring visual compatibility are not reasonably possible.

m. SOLAR INSTALLATIONS – Refer to "Solar Energy System Design Guidelines" approved by the Town Council in June 2015, utilizing best practices for installing solar on historical buildings as recommended by the Department of the Interior. These guidelines are available at Jerome Town Hall, the Jerome Library, and on the Town of Jerome website.

2. The Historic Preservation/Design Review Board and Zoning Administrator shall review a submitted application for *Design Approval of Alterations, Additions, or Renovations to Existing Buildings or Structures*, and shall have the power to approve, conditionally approve, or disapprove all such requests, basing their decision on the following criteria:

   a. ARCHITECTURAL FEATURES AND DETAILS – Original porches, decks, balconies, canopies, doors, windows, walls, fences, stairways, eaves, cornices, and other architectural features and details shall be preserved and retained where feasible. Necessary replacement of these features should be as near as possible to the original feature in design and material.

   b. ROOFS – Original roof shape, design, and material shall be preserved and retained where feasible. Where contemporary roofing material is used, it should be as near as possible to the appearance of the original roofing material.

   c. COLOR – Exterior colors should be as near as possible to the original colors appropriate to the years during which the particular building or structure was built.

   d. MATERIALS AND TEXTURE – The original exterior materials and texture shall be preserved and retained where feasible. Where contemporary materials are used, they should be as~~,~~ near as possible to the original material and texture.

3. The Historic Preservation/Design Review Board shall review a submitted application for *Approval of the Demolition, Partial Demolition, or Removal of Existing Buildings or Structures*, and shall have the power to approve, conditionally approve, or disapprove, all such requests; in accordance with the following procedures and criteria.

   a. In passing on an application for demolition, partial demolition, or removal, the Historic Preservation/Design Review Board shall consider, among other things, the architectural or aesthetic quality or significance of the building or structure to the public interests of the Town.

   b. If the Historic Preservation/Design Review Board finds that the public interest and the preservation and protection of historic places ~~and the public interest~~ will best be served by

postponing the demolition, partial demolition, or removal of a building or structure, it may postpone such action for a designated period, which shall not exceed one hundred eighty (180) days from the receipt of the application, and shall notify the applicant of such postponement. DuringWithin the period of postponement of such demolition or alteration of any building, the Historic Preservation/Design Review Board shall take steps to ascertain what the Town Council can or may do to preserve such building, including consultation with private civic groups, interested private citizens, and other public boards or agencies, and and including investigationconsideration of the potential use of the power of eminent domain when the preservation of a given building is clearly in the interest of the general welfare of the community and of certain historic and architectural significance. The Historic Preservation/Design Review Board shall thereaftern make such recommendations thereabout to the Town Council as the Board may determine to submit.

4. The Historic Preservation and CommissionDesign Review Board shall review a submitted application for Design Approval of Signs and shall have the power to approve, conditionally approve, or disapprove all such requests, basing its decision on the following criteria:

   a. MATERIALS – Signs made of durable, weather- resistant materials such as acrylic, resin, steel, aluminum, or composite materials are preferred.

   b. LETTERING – Lettering and symbols on signs should be routed, applied, or painted on the surface of the signing material.

   c. COLORS – Colors of a sign shall be visually compatible withto the colors of buildings, structures, and signs to which the sign is visually related.

   d. EXCEPTIONS – The Historic Preservation/Design Review Board may waive the requirements of this Section and Section 507 in order to allow the preservation or restoration of signs or commercial graphics which are determined to be of historical significance or of particular interest.

[Ord. No. 374; Ord. No. 406; Ord. No. 451; Ord. No. 470; Ord. No. 472]

I.J. APPEALS AND EXPIRATION OF APPROVALS

1. Any applicant, person residing within 300 feet of the project, or person adversely affected, may appeal a decision of the Historic Preservation/Design Review Board to the Town Council by filing a written notice of appeal with the Town Clerk not later than fifteen (15) days from the date ofthe board's decision. If the appellant is not the applicant and resides beyond 300 feet of the project, the appellant shall clearly demonstrate how they might be adversely affected by the proposed project.

2. When a written appeal is filed with the Town Clerk, the Town Clerk shall promptly provide notice of such an application to the Zoning Administrator. The appeal shall state the grounds for appeal and demonstrate how the appellant has been aggrieved or affected by the decision. The Zoning Administrator shall review the appeal to validate its completeness within three (3) days of receipt. If the appeal is deemed defective, the Zoning Administrator shall notify the applicant of the type and nature of the defect or defects within one (1) day of making said determination. If an appeal is determined to be complete, the Zoning Administrator shall schedule the appeal for Council consideration no later than 45 days from the determination of an application's completeness. Once scheduled, the Council shall evaluate the appeal at their next available regular or special meeting. Where an appeal has been filed, the Council may elect to set the matter for a public hearing. If such action is taken, a legal notice shall be published at least once in athe official newspaper of general circulation in the Town of Jerome, the site shall be posted at least fifteen (15) days prior to the hearing date, and notice shall be mailed to property owners within 300 feet of the site. Notice shall also be given to the Historic Preservation/Design Review Board and the appellant. The Zoning Administrator shall submit a report to the Council with all

relevant information and set forth the reasons for action taken by the Historic Preservation/Design Review Board.

3. An appeal may be filed by persons aggrieved or by any officer, department, board, or bureau of the municipality affected by a decision of the Zoning Administrator. Appeals will be forwarded to the Board of Adjustment by filing a written notice of appeal with the Zoning Administrator, no later than fifteen (15) days from the date of the Zoning Administrator's decision.
4. Six (6) months from the date of approval, a plan approval becomes void if a building permit has not been issued and/or work has not commenced.
5. A building permit may not be issued by the Building Inspector until the fifteen (15) -day appeal period has expired.
6. An extension of approval may be granted if the applicant files for an extension prior to the approval becoming void and the extension is granted by the approving board. The approving board may grant a second extension, provided the approval ~~is in~~ compli~~es~~ance with all ordinances and requirements in effect at the time of the extension request. Any additional extension requests require review by the Town Council. Application for an extension shall be accompanied by a filing fee in an amount established by a schedule adopted by resolution of the Council and filed in the office of the Town Clerk.

[Ord. No. 470]

~~J.~~K. VIOLATIONS AND ENFORCEMENT

1. Prior to the issuance of a building permit, the Building Inspector shall ascertain that the plans presented with the Building Permit application are in conformance with those plans approved by the Mayor and Council, Historic Preservation/Design Review Board, or the Zoning Administrator~~that the Design Review Board has approved plans in conformance to those presented with the building permit application~~ and that the time limitations imposed by this ordinance have not elapsed.
2. The Zoning Administrator shall ensure that all matters are undertaken according to the conditions of the design approval. In the event of a violation, the Zoning Administrator shall notify the permittee, by both Certified and First-Class mail, that he is in violation of the conditions of the design approval. If no attempt is made to change the circumstances of the violation ~~is made~~ within fifteen (15) days after notification, the building permit shall be revoked and considered null and void.
3. Violations, Enforcements, and Fines. If, fifteen (15) days after written notification by the Zoning Administrator, a citizen is still in violation of this ordinance, the Zoning Administrator shall take appropriate legal action to abate the violation.

[Ord. No. 470]

SECTION 305. ADMINISTRATIVE APPEALS AND VARIANCES

A. APPEALS TO THE BOARD OF ADJUSTMENT

1. Appeals to the Board of Adjustment concerning the interpretation or administration of this Ordinance may be taken by any person aggrieved or by any officer or department of the Town affected by any decision of the Zoning Administrator.
2. Applications for any matter to be considered by the Board shall be filed with the Zoning Administrator, on forms furnished for the purpose, within thirty (30) days ofafter the action being appealed from, and shall specify the grounds for the appealthereof. The Zoning Administrator shall promptlyforthwith transmit to the Board all papers constituting the record upon whichof the action appealed from is taken.
3. The appeal stays all proceedings in the matter appealed from, unless the Zoning Administrator, certifies to the board that, by reason of the facts stated in the certificate, a stay would, in theirhis opinion, cause imminent peril to life or property. In such case, proceedings shall not be stayed, except by a restraining order granted by the Board, or by a court of record on application and notice to the Zoning Administrator.
4. The Board shall hear the appeal within thirty (30) days, and shall give notice of hearing by publication of a notice in athe official newspaper of general circulation in the Town of Jerome and by posting the property affected not less than fifteen (15) days prior to the hearing. The notice shall set forth the time and place of the hearing and include a general explanation of the matter to be considered.
5. Any party may appear at the hearing in person or by agent or attorney. Parties in interest shall have the right to present their case by oral or documentary evidence, to submit rebuttal evidence, and to conduct such cross-examination of witnesses as may be required for a full and true disclosure of the facts.

B. VARIANCES

1. Any aggrieved person may appeal to the Board of Adjustment for a variance from the terms of the Zoning Ordinance only, if because of special circumstances applicable to the property, including its size, shape, topography, location, or surroundings the strict application of the zoning ordinance will deprive such property of privileges enjoyed by other property of same classification in the same zoning district. Any variance granted is subject to such conditions as will assure that the adjustment authorized shall not constitute a grant of special privileges inconsistent with the limitations upon other properties in the vicinity and zone in which such property is located.
2. A variance shall not be granted by the Board unless the alleged hardship caused by literal interpretation of the provisions of this Ordinance results in more than personal inconvenience and/or financial hardship, and is not the result of actions by the appellant.
3. In granting a vVariance, the Board may impose such conditions and safeguards as are appropriate to einsure that the purpose and intent of this Ordinance will be fulfilled. Failure to comply with such conditions and safeguards, when made a part of the terms under which a vVariance is granted, shall be deemed a violation of this Ordinance.
4. No nonconforming use or violations of this Ordinance with respect to neighboring lands, structures, or buildings, in the samne zoning district, and no permitted use of lands, structures, or buildings in other zoning districts, shall be considered grounds for granting a variance.
5. Every vVariance granted shall be personal to the appellant therefore and shall be transferrable and shall run with the land only after completion of any authorized structure or structures.

6. Nothing herein contained shall be construed to empower the Board to change the terms of this Ordinance, to authorize uses which violate any other Town Ordinance, to effect changes in the Zoning Map, or to add to the uses permitted in any zoning district.

C. APPEALS FROM THE BOARD

The decision of the Board shall be final; provided, however, that any person aggrieved by a decision of the Board, or a taxpayer, or a municipal officer may, at any time within thirty (30) days after athe filing of the decision in the office of the Board, petition the court for a writ of certiorari for review of the Board's decision. Allowance of the writ shall not stay proceedings upon the decision appealed from, but the court may, on application, on notice to the Board, and for good cause shown, grant a restraining order, and on final hearing may reverse or affirm, wholly or partly, or may modify the decision reviewed.

D. FEES

1. Upon filing an application for appeal, the appellant shall pay a filing fee in an amount established by a schedule adopted by resolution of the Council and filed in the offices of the Town Clerk. No part of the filing fee shall be returnable. Payment of the filing fee shall be waived when the petitioner is the Town, County, State, or Federal Government.

2. In the case of an appeal for a variance to more than one provision of this Ordinance, the filing fee shall equal the total amount chargeable for all provisions as prescribed by the fee schedule.

SECTION 306. NEIGHBORHOOD MEETINGS

A. PURPOSE

Neighborhood Meetings provide an opportunity for informal communication between an applicant, neighboring residents, and property owners who may be affected by development projects, use permits, rezoning, or ordinances that impose a new land use regulation or modify an existing land use regulation. The purposes of the Neighborhood Meeting are to inform the affected public about the project and encourage communication among the applicant and neighboring residents and property owners.

B. GENERAL REGULATIONS

1. Prior to any public hearing by the Planning and Zoning Commission on rezoning or ordinances that impose a new land use regulation or modify an existing land use regulation, the applicant or an appointed representative of the applicant shall arrange a meeting with the planning staff to identify development issues as well as to discuss arrangements and scheduling for the Neighborhood Meeting described in Subsection 4 below.
2. When required pursuant to Section 302.D.1 of the Jerome Zoning Ordinance, prior to any public hearing by the Planning and Zoning Commission on a use permit, the applicant or an appointed representative of the applicant shall arrange a meeting with the planning staff to identify development issues as well as to discuss arrangements and scheduling, if required, for the Neighborhood Meeting described in Subsection 4 below.
3. Prior to any public hearing by the Historic Preservation/Design Review Board on a development project, the applicant or an appointed representative of the applicant shall arrange a meeting with the planning staff to identify development issues as well as to discuss arrangements and scheduling, if required, for the Neighborhood Meeting described in Subsection 4 below.
4. A Neighborhood Meeting designed to inform adjoining residents and property owners about the proposed development project, use permit, ordinances that impose a new land use regulation or modify an existing land use regulation, or rezoning will, if required to be held, be arranged by the Zoning Administrator. The meeting should be held at~~in~~ a location~~place that is~~ generally accessible to neighbors who~~that~~ reside near the subject site.
5. At least 15 days prior to a scheduled Neighborhood Meeting, the Zoning Administrator shall notify all property owners within 300 feet of the subject site by first-class mail, and the actual property shall be posted with the meeting date and time. The mailed notification shall include the date, time, and place for the Neighborhood Meeting, as well as a description of the proposed land uses, project, or conditional use permit.
6. At the Neighborhood Meeting, it is the responsibility of the applicant or their representative to provide an opportunity for a question-and-answer period by the participants~~,~~ and identify a point of contact to the public for follow-up questions and comments.
7. The applicant shall prepare a written summary of the meeting, including a list of attendees, their addresses, and the issues and concerns discussed, and submit a copy of the summary to the Zoning Administrator within 15 days after the neighborhood meeting. The summary shall be made available, upon request, to any meeting attendee. Attendees may, at their discretion, also submit their comments to the Zoning Administrator.
8. If the application is substantially modified from what was presented at the initial Neighborhood Meeting, the Zoning Administrator may require that one or more additional Neighborhood Meetings be held in compliance with this section to present the modified application.
9. For rezonings of property initiated by the Town, the Town shall be deemed the applicant and shall conduct a Neighborhood Meeting as required by Subsections 2 through 5 of this section 306 B.~~-~~ For ordinances that impose a new land use regulation or modify an existing land use

regulation, the Town's obligations under this Section 306 shall be satisfied by complying with the notice and hearing requirements otherwise imposed by this Zoning Ordinance.

[Ord. No. 470 (reference to 304.F.5.deleted)]

C. FEE

A fee shall be assessed to the applicant in an amount established by Resolution of the Council and paid in the offices of the Town Clerk. No part of the fee shall be returnable. Payment of the fee shall be waived when the petitioner is the Ttown, Ceounty, Sstate, or Ffederal Ggovernment.

[Ord. No. 406]

SECTION 307. PRE-APPLICATION MEETINGS

A. PURPOSE

The purpose of this section is to provide applicants with early guidance on zoning requirements, development standards, and review procedures before submitting a formal application. This process helps identify potential issues, improve project design, ensure compliance with applicable regulations, and streamline the overall development review process.

B. GENERAL REGULATIONS

1. Prior to the submittal of any applications ~~as part of~~for subdivision plats, zone changes, conditional use permits, development packages for new construction, or any other application as determined by the Zoning Administrator, an applicant shall first participate in a pre-application review with ~~the~~ Town staff.

C. PRE-APPLICATION PROCEDURES

An applicant shall file a request for pre-application review with the Zoning Administrator on an application established by the Zoning Administrator that may require additional information, such as a time as, and all applicable portions of Section 304 shall apply to proposed development outside the Historic Overlay District.

ARTICLE IV: ZONING DISTRICTS

SECTION 401. ESTABLISHMENT OF ZONING DISTRICTS

In order to carry out the purposes of this ordinance, the Town of Jerome is hereby divided into the following zoning districts:

"AR" Zone - Agricultural Residential.

"R1-10" Zone - Single Family Residential

"R1-5" Zone - Single Family Residential

"R-2" Zone - Multiple Family Residential

"C-1" Zone - General Commercial

"I-1" Zone - Light Industrial

Historic Overlay District

SECTION 402. LOCATION AND BOUNDARIES OF DISTRICTS

1. The locations and boundaries of the zoning districts are established as they are shown on the map entitled "Zoning Map of the Town of Jerome,[1]" which is hereby incorporated into this ordinance.
2. Where uncertainty exists with respect to the boundaries of any zoning districts as shown on the zoning map, the following rules shall apply:
    a. Where district boundaries are shown by specific dimensions, such specific dimensions shall apply.
    b. Where district boundaries are indicated as approximately following streets, alleys, or right-of-way lines, such streets, alleys, or right-of-way lines shall be deemed to be such boundaries.
    c. Where district boundaries are so indicated that they approximately follow the lot lines, such lot lines shall be deemed to be said boundaries.
    d. Where district boundaries are so indicated that they are approximately parallel to the streets, alleys, or right-of-way lines, such district boundaries shall be deemed as being parallel thereto and at such distance therefrom as indicated on the zoning map. If no distance is given, such dimensions shall be determined by the use of the scale shown on the zoning map.
    e. Where the application of the above rules does not clarify the zone boundary location, then the Board of Adjustment shall determine the location.
3. Unzoned territory annexed to the Town subsequent to the effective date of this Ordinance shall, upon the date that said annexation becomes effective, automatically become zoned as AR, agricultural-residential, and shall so remain until such time as the Town Council shall see fit to approve a change of zone request for the annexed area.

[1] Codifier's note: The current Zoning Map is that map dated February 14, 2022, as adopted by Ordinance 477.

SECTION 403. "AR" ZONE, AGRICULTURAL RESIDENTIAL

A. PURPOSE

This district is intended to promote and preserve low-density residential development and non-commercial farming and agriculture. Land use is composed chiefly of individual homes, while also accommodating compatible~~together with required~~ recreational, religious, and educational facilities.

B. PERMITTED AND CONDITIONAL USES

The permitted and conditional uses of the AR zone are listed in Table 410: Use Matrix of Section 410.

C. USE/ZONE-SPECIFIC STANDARDS

Standards for the zoning district and specific uses are provided in Table 411: Use/Zone-Specific Standards Matrix and Table 412: Development Standards Matrix

~~**PERMITTED USES**~~

- ~~One (1) single-family dwelling or one (1) modular home per lot. Mobile homes are prohibited.~~
- ~~Customary accessory uses and buildings, provided such uses are incidental to the principal use.~~
- ~~Temporary buildings for uses incidental to construction work, which buildings shall be removed upon completion of or abandonment of the construction work.~~
- ~~Publicly owned and operated parks and recreation areas and centers.~~
- ~~Home occupations.~~
- ~~Noncommercial farming and agriculture, not including the keeping of livestock.~~
- ~~Keeping of cattle and horses owned by members of the family occupying the premises, but not to exceed one (1) head per 20,300 square feet of lot area.~~

~~**CONDITIONAL USES**~~

- ~~Animals, fowl, and other typical farm livestock, except as otherwise prohibited herein.~~
- ~~Commercial stables~~
- ~~Churches or similar places of worship~~
- ~~Schools: Public or private elementary and high.~~
- ~~Colleges, universities, and professional schools having a regular curriculum.~~
- ~~Nursery Schools and Day Care Centers.~~
- ~~Privately owned and operated recreation areas and centers.~~
- ~~Public buildings other than hospitals.~~
- ~~Public utility buildings, structures, or appurtenances thereto for public service use.~~
- ~~Model Homes~~
- ~~Bed and Breakfast~~
- ~~Viniculture use, pursuant to Chapter 16, "Vineyards," of the Jerome Town Code.~~
- ~~Beekeeping~~

[Ord. No. 380; Ord. No. 474]

~~**ZONE RESTRICTIONS**~~

- ~~Cattle, horses, sheep, goats, dogs, cats, birds, fowl, and any other living animals, and the pens, stalls, stables, yards, shelters, cages, areas, places, and premises where they are held or kept, shall be so maintained that flies, insects, or vermin, rodent harborage, odors, ponded water, the~~

accumulation of manure, garbage, refuse or other noxious material do not become a public health nuisance and do not disturb the peace, comfort, or health of any person.

- Any person, firm, or corporation is prohibited from keeping or sheltering any animal, bird, or fowl other than a household pet within one hundred (100) feet of a building, other than his own, used for human habitation.
- Pigs shall not be kept within the city limits.

PROPERTY DEVELOPMENT STANDARDS

- MINIMUM LOT AREA: Ten thousand (10,000) square feet.
- MINIMUM LOT WIDTH: One hundred (100) feet
- MINIMUM SQUARE FOOTAGE OF DWELLING: Eight hundred and fifty (850) square feet of enclosed floor space exclusive of any attached garage.
- MAXIMUM LOT COVERAGE: Not more than forty (40) percent of the net area of the lot may be covered by the main building and all accessory buildings.
- YARDS:
  - Front Yard
    - There shall be a front yard not less than twenty (20) feet in depth.
    - Where lots have a double frontage on two (2) streets, the required front yard of twenty (20) feet shall be provided on both streets.
  - Side Yard
    - There shall be a side yard along interior lot lines of not less than ten (10) feet in width.
    - Where a side lot line abuts a street, there shall be a side yard of not less than twenty (20) feet in width.
  - Rear Yard
    - There shall be a rear yard of not less than twenty (20) feet in depth, except where the rear lot line is in common with or separated by an alley from the side lot line of another lot, there shall be a rear yard of not less than ten (10) feet in depth.
    - Where the rear lot line abuts an alley, the required rear yard shall be measured from the center line of the alley.
- MAXIMUM BUILDING HEIGHT: No building shall exceed the height of twenty five (25) feet as defined in "building, height of". On slopes over forty-five percent (45%) there will be a one (1) foot reduction in height for each additional five percent (5%) of slope or portion thereof. Notwithstanding these provisions, no face of any building shall exceed thirty-five (35) feet above the low point of original grade as defined in "original grade". (see Appendix for diagrams).
- ACCESSORY BUILDINGS
  - Accessory buildings shall be considered in determining yard, lot and area requirements.
  - Accessory buildings shall not be used for human habitation.
  - Detached accessory buildings shall meet all required setbacks and maintain a space of five (5) feet from the main building or other structures.
  - Detached accessory buildings shall be constructed to a height not greater than fourteen (14) feet to the peak or highest point of the roof, as defined in "Accessory Building, Height of."

[Ord. No. 446]

GENERAL PROVISIONS

The provisions of Section 502 shall apply.

SIGNS

The provisions of Section 509 shall apply.

PARKING AND LOADING

The provisions of Section 510 shall apply.

PLAN REVIEW

The provisions of Section 303 shall apply.

DESIGN REVIEW

The provisions of Section 304 shall apply to all property, buildings and structures within the Historic Overlay District.

SECTION 404. "R1-10" ZONE, SINGLE FAMILY RESIDENTIAL

A. PURPOSE

This district is intended to promote and preserve low density residential development. Regulations and property development standards are designed to protect the single-family residential character of the district and to prohibit all incompatible activities. Land use is composed chiefly of individual homes, while also accommodating compatible~~together with required~~ recreational, religious and educational facilities.

B. PERMITTED AND CONDITIONAL USES

The permitted and conditional uses of the R1-10 zone are listed in Table 410: Use Matrix of Section 410.

C. USE/ZONE-SPECIFIC STANDARDS

Standards for the zoning district and specific uses are provided in Table 411: Use/Zone-Specific Standards Matrix and Table 412: Development Standards Matrix

~~One (1) single-family dwelling or one (1) modular home per lot. Mobile homes are prohibited.~~

~~Customary accessory uses and buildings provided such uses are incidental to the principal use.~~

~~Temporary buildings for uses incidental to construction work, which buildings shall be removed upon completion of or abandonment of the construction work.~~

~~Publicly owned and operated parks and recreation areas and centers.~~

~~Home Occupations.~~

~~**CONDITIONAL USES**~~

~~Churches or similar places of worship.~~

~~Schools: Public or private elementary and high.~~

~~Colleges, universities, and professional schools having a regular curriculum.~~

~~Nursery Schools and Day Care Centers.~~

~~Public buildings other than hospitals.~~

~~Public utility buildings, structures, or appurtenances thereto for public service use.~~

~~Libraries.~~

~~Model Homes.~~

~~Bed and Breakfast~~

~~Beekeeping~~

[Ord. No. 474]

~~**PROPERTY DEVELOPMENT STANDARDS**~~

~~MINIMUM LOT AREA: Ten thousand (10,000) square feet~~

~~MINIMUM LOT WIDTH: One hundred (100) feet~~

~~MINIMUM SQUARE FOOTAGE OF DWELLING: Eight hundred and fifty (850) square feet of enclosed floor space exclusive of any attached garage.~~

~~MAXIMUM LOT COVERAGE: Not more than forty (40) percent of the net area of the lot may be covered by the main building and all accessory buildings.~~

~~Yards:~~

~~Front Yard:~~

- There shall be a front yard of not less than twenty (20) feet in depth.
- Where lots have a double frontage on two (2) streets, the required front yard of twenty (20) feet shall be provided on both streets.

- Side Yard:
  - There shall be a side yard along interior lot lines of not less than ten (10) feet in width.
  - Where a side lot line abuts a street, there shall be a side yard of not less than twenty (20) feet in width

- Rear Yard:
  - There shall be a rear yard of not less than twenty (20) feet in depth, except where the rear lot line is in common with or separated by an alley from the side lot line of another lot, there shall be a rear yard of not less than ten (10) feet in depth.
  - Where the rear lot line abuts an alley, the required rear yard shall be measured from the center line of the alley.

- MAXIMUM BUILDING HEIGHT: No building shall exceed the height of twenty-five (25) feet as defined in "building, height of." On slopes over forty-five (45) percent there will be a one (1) foot reduction in height for each additional five (5) percent of slope or portion thereof. Notwithstanding these provisions, no face of any building shall exceed thirty-five (35) feet above the low point of original grade as defined in "original grade." (see Appendix for diagrams).

- ACCESSORY BUILDINGS
  - Accessory buildings shall be considered in determining yard, lot, and area requirements.
  - Accessory buildings shall not be used for human habitation.
  - Detached accessory buildings shall meet all required setbacks and maintain a space of five (5) feet from the main building or other structures.
  - Detached accessory buildings shall be constructed to a height not greater than fourteen (14) feet to the peak or highest point of the roof, as defined in "Accessory Building, Height of."

[Ord. No. 446]

- **GENERAL PROVISIONS**

  The provisions of Section 502 shall apply.

- **SIGNS**

  The provisions of Section 509 shall apply.

- **PARKING AND LOADING**

  The provisions of Section 510 shall apply.

- **PLAN REVIEW**

The provisions of Section 303 shall apply.

- **DESIGN REVIEW**

  The provisions of Section 304 shall apply to all property, buildings, and structures within the Historic Overlay District.

SECTION 405. "R1-5" ZONE, SINGLE FAMILY RESIDENTIAL

A. PURPOSE

This district is intended to fulfill the need for medium density single family residential development. Regulations and property development standards are designed to protect the single family residential character of the district and to prohibit all incompatible activities. Land use is composed chiefly of individual homes, while also accommodating compatible~~together with required~~ recreational, religious, and educational facilities.

B. PERMITTED AND CONDITIONAL USES

The permitted and conditional uses of the R1-5 zone are listed in Table 410: Use Matrix of Section 410.

~~One (1) single-family dwelling or one (1) modular home per lot. Mobile homes are prohibited.~~

~~Customary accessory uses and buildings, provided such uses are incidental to the principal use.~~

~~Temporary buildings for uses incidental to construction work, which buildings shall be removed upon completion of or abandonment of the construction work.~~

~~Publicly owned and operated parks and recreation areas and centers.~~

~~Home occupations.~~

~~**CONDITIONAL USES**~~

~~Churches or similar places of worship.~~

~~Schools: Public or private elementary and high.~~

~~Colleges, universities, and professional schools having a regular curriculum.~~

~~Nursery Schools and Day Care Centers.~~

~~Public buildings.~~

~~Public utility buildings, structures, or appurtenances thereto for public service use.~~

~~Libraries.~~

~~Model homes~~

~~Bed and Breakfast~~

~~Beekeeping~~

[Ord. No. 474]

C. USE/ZONE-SPECIFIC STANDARDS

Standards for the zoning district and specific uses are provided in Table 411: Use/Zone-Specific Standards Matrix and Table 412: Development Standards Matrix.

~~MINIMUM LOT AREA: Five thousand (5,000) square feet.~~

~~MINIMUM LOT WIDTH: Fifty (50) feet.~~

~~MINIMUM SQUARE FOOTAGE OF DWELLING: Eight hundred and fifty (850) square feet of enclosed floor space exclusive of any attached garage.~~

~~MAXIMUM LOT COVERAGE: Not more than sixty (60) percent of the net area of the lot may be covered by the main building and all accessory buildings.~~

~~Yards:~~

~~Front Yard:~~

- There shall be a front yard of not less than ten (10) feet in depth except when the following conditions prevail:
- A front yard is required equal to that established by any building within one hundred (100) feet on either or both sides of the lot. Where more than one (1) such building is within one hundred (100) feet of the lot then the front yard of the nearest such building shall be the required front yard of the lot, except that where the lot is between two such buildings, each within one hundred (100) feet of a lot, then the front yard of this lot shall be that established by a line joining the nearest front corner of the other such building. Nothing in the above shall require that a front yard in this district exceed twenty (20) feet.
- Where lots have a double frontage on two (2) streets, the required front yard shall be provided on both streets.
- Side Yard:
- There shall be a side yard along interior lot lines of not less than five (5) feet in width.
- Where a side lot line abuts a street, the side yard shall be considered a front yard for the purpose of determining width.
- Rear Yard:
- There shall be a rear yard of not less than twenty (20) feet in depth. Except where the rear lot line is in common with or separated by an alley from the side lot line of another lot, there shall be a rear yard of not less than ten (10) feet in depth.
- Where the rear lot line abuts an alley, the required rear yard shall be measured from the center line of the alley.
- MAXIMUM BUILDING HEIGHT: No building shall exceed the height of twenty five (25) feet as defined in "building, height of." On slopes over forty-five (45) percent there will be a one (1) foot reduction in height for each additional five (5) percent of slope or portion thereof. Notwithstanding these provisions, no face of any building shall exceed thirty-five (35) feet above the low point of original grade as defined in "original grade". (see Appendix for diagrams).
- ACCESSORY BUILDINGS
- Accessory buildings shall be considered in determining yard, lot and area requirements.
- Accessory buildings shall not be used for human habitation.
- Detached accessory buildings shall meet all required setbacks and maintain a space of five (5) feet from the main building or other structures.
- Detached accessory buildings shall be constructed to a height not greater than fourteen (14) feet to the peak or highest point of the roof, as defined in "Accessory Building, Height of."

[Ord. No. 446]

- **GENERAL PROVISIONS**

  The provisions of Section 502 shall apply.

- **SIGNS**

  The provisions of Section 509 shall apply.

- **PARKING AND LOADING**

  The provisions of Section 510 shall apply.

- **PLAN REVIEW**

  The provisions of Section 303 shall apply.

- **DESIGN REVIEW**

~~The provisions of Section 304 shall apply to all property, buildings and structures within the Historic Overlay District.~~

SECTION 406. "R-2" ZONE, SINGLE- AND TWO-FAMILY RESIDENTIAL

A. PURPOSE

This district is intended to fulfill the need for medium density residential development regulations and property development standards are designed to allow maximum flexibility and variety in residential development while prohibiting all incompatible activities. Land use is composed chiefly of single- and two-family homes, while also accommodating compatible~~together with required~~ recreational, religious, and educational facilities.

B. PERMITTED AND CONDITIONAL USES

The permitted and conditional uses of the R-2 zone are listed in Table 410: Use Matrix of Section 410.~~One (1) single-family dwelling or one (1) two-family dwelling or one (1) modular home per lot. Mobile homes are prohibited.~~

~~Customary accessory uses and buildings, provided such uses are incidental to the principal use.~~

~~Temporary buildings for uses incidental to construction work, which buildings shall be removed upon completion of or abandonment of the construction work.~~

~~Publicly owned and operated parks and recreation areas and centers.~~

~~Home occupations.~~

C. USE/ZONE-SPECIFIC STANDARDS

Standards for the zoning district and specific uses are provided in Table 411: Use/Zone-Specific Standards Matrix and Table 412: Development Standards Matrix.~~Any conditional use in the R1-5 zone.~~

~~**PROPERTY DEVELOPMENT STANDARDS**~~

~~MINIMUM LOT AREA: Five thousand (5,000) square feet.~~

~~MINIMUM LOT WIDTH: Fifty (50) feet.~~

~~MINIMUM SQUARE FOOTAGE OF DWELLING: Eight hundred and fifty (850) square feet of enclosed floor space exclusive of any attached garage.~~

~~MAXIMUM LOT COVERAGE: Not more than sixty (60) percent of the net area of the lot may be covered by the main building and all accessory buildings.~~

~~Yards:~~

~~a. Front Yard:~~

~~1) There shall be a front yard of not less than ten (10) feet in depth except when the following conditions prevail:~~

~~A front yard is required equal to that established by any building within one hundred (100) feet on either or both sides of the lot. Where more than one such building is within one hundred (100) feet of the lot then the front yard of the nearest such building shall be the required front yard of the lot, except that where the lot is between two such buildings, each within one hundred (100) feet of a lot, then the front yard of this lot shall be that established by a line joining the nearest front corner of the other such building. Nothing in the above shall require that a front yard in this district exceed twenty (20) feet.~~

~~2) Where lots have a double frontage on two (2) streets, the required front yard shall be provided on both streets.~~

~~b. Side Yard:~~

~~1) There shall be a side yard along interior lot lines of not less than five (5) feet in width.~~

~~2) Where a side lot line abuts a street, the side yard shall be considered a front yard for the purpose of determining width.~~

c. Rear Yard:

1) There shall be a rear yard of not less than twenty (20) feet in depth. Except where the rear lot line is in common with or separated by an alley from the side lot line of another lot, there shall be a rear yard of not less than ten (10) feet in depth.

2) Where the rear lot line abuts an alley, the required rear yard shall be measured from the center line of the alley.

MAXIMUM BUILDING HEIGHT: No building shall exceed the height of twenty five (25) feet as defined in "building, height of." On slopes over forty five (45) percent there will be a one (1) foot reduction in height for each additional five (5) percent of slope or portion thereof. Notwithstanding these provisions, no face of any building shall exceed thirty five (35) feet above the low point of original grade as defined in "original grade". (see Appendix for diagrams).

ACCESSORY BUILDINGS

Accessory buildings shall be considered in determining yard, lot and area requirements.

Accessory buildings shall not be used for human habitation.

Detached accessory buildings shall meet all required setbacks and maintain a space of five (5) feet from the main building or other structures.

Detached accessory buildings shall be constructed to a height not greater than fourteen (14) feet to the peak or highest point of the roof, as defined in "Accessory Building, Height of."

[Ord. No. 446; Ord. No. 454]

GENERAL PROVISIONS

The provisions of Section 502 shall apply.

SIGNS

The provisions of Section 509 shall apply.

PARKING AND LOADING

The provisions of Section 510 shall apply.

PLAN REVIEW

The provisions of Section 303 shall apply.

DESIGN REVIEW

The provisions of Section 304 shall apply to all property, buildings and structures within the Historic Overlay District.

SECTION 407. "C–1" ZONE, GENERAL COMMERCIAL

A. PURPOSE

This district is intended to provide for and encourage orderly development in existing and future commercial areas within the Town.

B. PERMITTED AND CONDITIONAL USES

The permitted and conditional uses of the C-1 zone are listed in Table 410: Use Matrix of Section 410.~~Retail sales of apparel and accessories, dry goods, foods, drugs, flowers and plants, garden supplies, hardware, gifts and novelties, pet and hobby supplies, art and art supplies, jewelry, liquor, tobacco, newspapers and magazines, music and records, household supplies, stationary, books, paint, wallpaper and glass, sporting goods, toys, variety store goods, appliances, auto parts and supplies, furniture, office supplies, leather and leather products, carpet, antiques, fabrics, photo supplies, second hand and used goods and similar convenience goods.~~

~~Repair services such as, but no more objectionable or intensive in character than, watches, jewelry, shoes, locksmith, minor household appliances.~~

~~Personal services such as: barbers, beauty shops, health clubs, laundries and cleaners, mortuaries.~~

~~Hotels.~~

~~Establishments serving food or beverages inside a building such as: restaurants, cafes, coffee shops, bars, taverns, cocktail lounges, excluding entertainment and dancing in connection therewith.~~

~~Manufacturing incidental to a permitted use is permitted, but subject to the following limitations:~~

~~All products incidental to a permitted use which are manufactured or processed on the premises shall be sold at retail only and on the premises only.~~

~~Such manufacturing activity shall be restricted to not over fifty (50) percent of the ground floor area of the building allocated to the permitted use.~~

~~Pawn shops.~~

~~Printers and print shops.~~

~~Radio and TV studios provided that no masts, towers, or antenna used for transmission or broadcasting purposes are erected on the premises.~~

~~Banks, stock brokerage firms, savings and loan associations, loan companies, and credit unions.~~

~~Governmental services, public utility offices and exchanges, excluding storage or repair services.~~

~~Offices related to any of the following occupations: executive, administrative, professional, accounting, banking, writing, clerical, stenographic, graphic art, real estate, and sales.~~

~~Medical and dental offices and clinics.~~

~~Establishments primarily supplemental in character to other permitted principal uses, such as: pharmacy, apothecary shop, sales of corrective garments, prosthetic devices, optical goods, and medical and dental laboratories.~~

~~Establishments whose principal function is basic research, design, and pilot or experimental product development, when conducted within a completely enclosed building.~~

~~Business and trade schools, dancing, art, and music schools and studios.~~

~~Headquarters buildings of charitable, philanthropic, and welfare organizations, provided that their primary activities are administrative and clerical rather than residential in nature.~~

~~Accessory buildings, structures and other uses customarily incidental to a permitted use except as otherwise provided in this Ordinance.~~

Any other such uses as determined by the Planning and Zoning Commission and approved by the Town Council to be similar to those uses listed above and not detrimental to the public health, safety and general welfare in accordance with the provisions of this Ordinance.

[Ord. No. 293; Ord. No. 465]

CONDITIONAL USES

- Any "Permitted" or "Conditional" Uses in the "R1-10", "R1-5" or "R-2" Zones.
- Establishments serving food or beverages for consumption on the premises, but outside of an enclosed building.
- Establishments serving food or beverages which include entertainment or dancing.
- Temporary outdoor sales, displays and other outdoor activities.
- Indoor commercial recreation establishments, such as bowling alleys, billiard parlors, skating rinks and similar establishments.
- Outdoor commercial recreation establishments.
- Indoor theaters, assembly halls, ballrooms and similar places of assembly.
- Taxi stands, bus stops, parking lots and garages.
- Gas service stations.
- Outdoor sales of nursery stock.
- Pet shops.
- Any such other uses as determined by the Planning and Zoning Commission and approved by the Town Council to be similar to those uses listed above and not detrimental to the public health, safety and general welfare in accordance with the provisions of this Ordinance.
- Residential use of a building, including apartment houses, when in the opinion of the Planning and Zoning Commission, said use has little or no adverse effect on the public health, safety and general welfare. Residential use with historic precedence in the subject buildings are exempt from the well-being criteria but remain subject to nonconforming use clauses.
- Hospitals, nursing homes and convalescent homes.
- Spirituous Liquor Tasting Facilities.

[Ord. No. 293; Ord. No. 408; Ord. No. 454; Ord. No. 465]

C. USE/ZONE-SPECIFIC STANDARDS

Standards for the zoning district and specific uses are provided in Table 411: Use/Zone-Specific Standards Performance Standard Matrix and Table 412: Development Standards Matrix. All activities, except as otherwise addressed herein, shall be conducted entirely within enclosed buildings.

Outdoor storage or display of goods or materials shall be prohibited.

Warehousing or indoor storage of goods or materials, exceeding that normally incidental to permitted uses, shall be prohibited.

[Ord. No. 293;]

PROPERTY DEVELOPMENT STANDARDS

MINIMUM LOT AREA: None, provided all other provisions of the ordinance are met.

MINIMUM LOT WIDTH: None, provided all other provisions of the ordinance are met.

MINIMUM SQUARE FOOTAGE OF MAIN BUILDING: None, provided all other provisions of the Ordinance are met.

MAXIMUM LOT COVERAGE: None provided all other provisions of the ordinance are met.

YARDS:

Front Yard:

There shall be a front yard of not less than ten (10) feet in depth except when the following conditions prevail:

The front yard is required equal to that established by any commercial building within one hundred (100) feet on either or both sides of the lot. Where more than one such building is within one hundred (100) feet of the lot then the front yard of the nearest such building shall be the required front yard of the lot, except that where the lot is between two (2) such buildings, each within one hundred (100) feet of a lot, then the front yard of this lot shall be that established by a line joining the nearest front corner of the other such building. Nothing in the above shall require that a front yard in this district exceed twenty (20) feet.

Where lots have a double frontage on two (2) streets, the required front yard shall be provided on both streets.

Side Yard:

Where the side lot line is in common with the side lot line of a property in a commercial or industrial zone, no side yard shall be required on that side.

Where a side lot line abuts a street, the side yard shall be considered a front yard for the purpose of determining width.

Where the side lot line is in common with the side lot line of a property in a residential zone, the side yard requirements of the residential zone shall apply to that side yard, provided nothing shall require such a side yard to be greater than ten (10) feet in width.

Rear Yard:

There shall be a rear yard of not less than twenty (20) feet in depth, except where the rear lot line is in common with or separated by an alley from the side lot line of a lot in a commercial or industrial zone, there shall be a rear yard of not less than ten (10) feet in depth.

Where the rear lot line abuts an alley, the required rear yard shall be measured from the centerline of the alley.

MAXIMUM BUILDING HEIGHT: The maximum building height shall not exceed the height of twenty-five (25) feet except when the following conditions prevail:

The maximum building height shall not exceed that established by any building within one hundred (100) feet on either or both sides of the lot. Where more than one such building is within one hundred (100) feet of the lot, then the maximum building height of the nearest such building shall be the maximum building height of the lot. Except that where the lot is between two (2) such buildings, each within one hundred (100) feet of the lot, then the maximum building height of the center of this lot shall be that established by a line joining the highest point of the other such buildings. Nothing in the above shall require that the maximum building height in this district be less than twenty-five (25) feet. (see Appendix for diagrams).

Notwithstanding these provisions, no face of any building shall exceed thirty-five (35) feet above the low point of original grade as defined in "original grade."

ACCESSORY BUILDINGS

Accessory buildings shall be considered in determining yard, lot, and area requirements.

Accessory buildings shall not be used for human habitation.

Detached accessory buildings shall meet all required setbacks and maintain a space of five (5) feet from the main building or other structures.

Detached accessory buildings shall be constructed to a height not greater than fourteen (14) feet to the peak or highest point of the roof, as defined in "Accessory Building, Height of."

[Ord. No. 446]

GENERAL PROVISIONS

The provisions of Section 502 shall apply.

SIGNS

The provisions of Section 509 shall apply.

PARKING AND LOADING

The provisions of Section 510 shall apply.

PLAN REVIEW

The provisions of Section 303 shall apply.

DESIGN REVIEW

The provisions of Section 304 shall apply to all property, buildings, and structures within the Historic Overlay District.

SECTION 408. "I-1" ZONE, LIGHT INDUSTRIAL

A. PURPOSE~~URPOSE~~

This district is intended to provide for commercial, industrial, and manufacturing activities, while ensuring that these activities will in no manner affect in a detrimental way any of the surrounding districts.

B. PERMITTED AND CONDITIONAL USES

The permitted and conditional uses of the I-1 zone are listed in Table 410: Use Matrix of Section 410.~~Any permitted use in the C-1 Zone.~~

~~USE AND CONDITIONAL USES~~

~~ANY CONDITIONAL USE IN THE C-1 ZONE.~~

~~LIGHT INDUSTRIES SUCH AS, BUT NO MORE OBJECTIONABLE OR INTENSIVE IN CHARACTER THAN: JEWELRY, CLOTHING, AND FURNITURE MANUFACTURERS.~~

~~WAREHOUSES.~~

~~WHOLESALE ESTABLISHMENTS.~~

~~AUTOMOBILE REPAIR GARAGES.~~

~~ACCESSORY BUILDINGS, STRUCTURES, AND USES CUSTOMARILY INCIDENTAL TO A PERMITTED USE EXCEPT AS OTHERWISE PROVIDED IN THIS ORDINANCE.~~

~~ANY SUCH OTHER USES AS DETERMINED BY THE PLANNING AND ZONING COMMISSION AND APPROVED BY THE CITY COUNCIL TO BE SIMILAR TO THOSE USES LISTED ABOVE AND NOT DETRIMENTAL TO THE PUBLIC HEALTH, SAFETY, AND GENERAL WELFARE IN ACCORDANCE WITH THE PROVISIONS OF THIS ORDINANCE.~~

C. USE/ZONE-SPECIFIC ~~DISTRICT~~ STANDARDS~~RESTRICTIONS~~

Standards for the zoning district and specific uses are provided in Table 411: Use/Zone-Specific Standards ~~Performance Standard~~ Matrix and Table 412: Development Standards Matrix.~~Same as C-1 Zone.~~

~~PROPERTY DEVELOPMENT STANDARDS~~

~~Same as C-1 Zone.~~

~~PERFORMANCE STANDARDS~~

~~Any permitted or conditional use in the I-1 zone must conform to the following performance standards. In conjunction with the plan review process, the developer-applicant shall provide to both the Zoning Administrator and the Planning and Zoning Commission data which are sufficient to show that the proposed use and the manner of its conduct will meet these performance standards.~~

- ~~NOISE: At no point on the property line shall the sound pressure level of any individual operation exceed the decibel levels in the designated octave bands shown below. (Excluding operation of motor vehicles or other transportation facilities.)~~

Octave band cycles per second	Maximum sound pressure level in decibels .0002 dynes per CM²
0—75	72
75—150	67
150—300	59
300—600	52
600—1200	46
1200—2400	40
2400—4800	34
Above 4800	32

Sound levels shall be measured with a sound level meter and associated octave band filter manufactured according to standards prescribed by the American Standards Association. Measurements shall be made using the flat network of the sound level meter.

Impulsive type noises shall be subject to the performance standards provided that such noises shall be capable of being accurately measured with such equipment. Noise capable of being so measured, for the purpose of this section, shall be those noises which cause rapid fluctuations of the needle of the sound level meter with a variation of not more than plus or minus two (2) decibels. Noises incapable of being so measured, such as those of an irregular or intermittent nature, shall be controlled so as not to become a nuisance to adjacent uses.

SMOKE: No emission of smoke from any source shall be permitted to exceed a greater density than that density described as No. 1 on the Ringleman Chart. However, smoke may be emitted, which is equal to but not darker than No. 2 on the Ringleman Chart, for not more than four (4) minutes in any thirty (30) minute period. For the purpose of grading the density of smoke, the Ringleman Chart, as published by the U.S. Bureau of Mines shall be the standard.

GLARE OR HEAT: Any activity producing intense glare or heat shall be performed within a completely enclosed building in such a manner as not to create a nuisance or hazard along lot lines.

VIBRATION: No vibration shall be permitted which is discernible beyond the lot line to the human sense of feeling for three (3) minutes or more duration in any one (1) hour of the day between the hours of 7:00 a.m. to 7:00 p.m., or of thirty (30) seconds or more duration in any one (1) hour during the hours of 7:00 p.m. and 7:00 a.m.

FLY ASH, DUST, FUMES, VAPORS, GASES AND OTHER FORMS OF AIR POLLUTION: No emission shall be permitted which can cause damage to health, to animals, or vegetation, or other forms of property, or which can cause any excessive soiling.

LIQUIDS AND SOLID WASTE: No wastes shall be discharged in the public sewage system which endangers the normal operation of the public sewage system.

ODORS: No emission of odorous gases or other odorous matter shall be permitted in such quantities as to be offensive in such a manner as to create a nuisance or hazard beyond the property lines.

GENERAL PROVISIONS

The provisions of Section 502 shall apply.

SIGNS

The provisions of Section 509 shall apply.

PARKING AND LOADING

The provisions of Section 510 shall apply.

PLAN REVIEW:

~~The provisions of Section 303 shall apply.~~

~~**DESIGN REVIEW**~~

~~The provisions of Section 304 shall apply to all property, buildings, and structures within the Historic Overlay District.~~

SECTION ~~5.11~~409. HISTORIC OVERLAY DISTRICT

A. PURPOSE

The purpose of the Historic Overlay District is to preserve and protect the historical quality and distinctive architectural character of the Town of Jerome since Jerome's economic and environmental well-being depends exclusively upon its distinctive character, natural attractiveness, and overall architectural quality which contribute substantially to its viability as a recreation and tourist center and which contributed to its designation as a National Historic Landmark.

B. DISTRICT RESTRICTIONS

The exterior designs of proposed new buildings and structures, proposed alterations of buildings and structures, landscaping plans, proposed signs, and proposed demolition of buildings and structures within the Historic Overlay District shall be reviewed by the Historic Preservation and ~~Commission~~Design Review Board in accordance with the provisions of Section 304 of this Ordinance to ensure that all new development is compatible with the surrounding environment.

C. DISTRICT BOUNDARIES

The Historic Overlay District shall include all areas within the corporate limits of the Town of Jerome as of 10/13/2026. Future annexations of land without historic resources shall not be included within the district boundaries.

SECTION 410. USE MATRIX

Table 410: Use Matrix

P = Permitted Use
C = Conditional Use; some conditionally permitted uses are also subject to the standards of Table 411: Use/Zone-Specific Standards Matrix.
X = Prohibited Use
U = Permitted subject to the standards of Table 411: Use/Zone-Specific Standards Matrix

Uses	AR	R1-10	R1-5	R-2	C-1	I-1
One (1) Single-Family Dwelling	P	P	P	P	C	C
One (1) Duplex~~two family dwelling~~	X	P~~X~~	P~~X~~	P	C	C
One (1) Triplex	X	C	C	P	C	C
One (1) Quadplex	X	C	C	P	C	C
One (1) Modular Home per lot	P	P	P	P	C	C
Mobile Homes	X	X	X	X	X	X
Multi-family Dwelling	X	X	X	X	C	C
Accessory Uses, buildings, and structures ~~and other uses customarily~~ incidental to a principally permitted use, except as otherwise provided in this Ordinance	P	P	P	P	P	P
Adaptive Residential Reuse, subject to the standards of the Table 411: Use/Zone-Specific Standards Matrix	C	C	C	C	C	C
Administrative and Professional Offices	X	X	X	X	P	P
Animals, fowl, and other typical farm livestock, except as otherwise prohibited herein.	C	X	X	X	X	X
Automobile Repair Services Establishment~~Garage~~	X	X	X	X	X	C
Automobile Sales	X	X	X	X	C	C
Automobile Service Stations	X	X	X	X	C	C
Automobile Wrecking Yard	X	X	X	X	X	C
Banks, stock brokerage firms, savings and loan associations, loan companies, and credit unions	X	X	X	X	P	P
Bed and Breakfast	C	C	C	C	C	C
Beekeeping subject to the standards of Table 411: Use/Zone-Specific Standards Matrix	C	C	C	C	C	C
Business and trade schools, dancing, art, and music schools and studios	X	X	X	X	P	P
Cemeteries	C	X	X	X	X	C
Child Care Centers	C	C	C	C	C	C
Child Day Care Home	C	C	C	C	C	C
Churches or similar places of worship	C	C	C	C	C	C
Commercial stables	C	X	X	X	X	X
~~Customary accessory uses and buildings, provided such uses are incidental to the principal use~~	~~P~~	~~P~~	~~P~~	~~P~~		
Educational						
Colleges, universities, and professional schools having a regular curriculum	C	C	C	C	C	C
Public, ~~or~~ Private, Charter, or Parochial Elementary, Junior High, and High Schools	C	C	C	C	C	C
Establishments primarily supplemental in character to other permitted principal uses, such as: pharmacy, apothecary shop, sales of corrective garments, prosthetic devices, optical goods, and medical and dental laboratories	X	X	X	X	P	P
~~Establishments serving food or beverages for consumption on the premises, but outside of an enclosed building~~	~~X~~	~~X~~	~~X~~	~~X~~	~~C~~	~~C~~
~~Establishments serving food or beverages inside a building such as: restaurants, cafes, coffee shops, bars, taverns, cocktail lounges, excluding entertainment and dancing in connection therewith.~~	~~X~~	~~X~~	~~X~~	~~X~~	~~P~~	~~P~~
~~Establishments serving food or beverages which include entertainment or dancing~~	~~X~~	~~X~~	~~X~~	~~X~~	~~C~~	~~C~~
~~Establishments whose principal function is basic research, design, and pilot or experimental product development, when conducted within a completely enclosed building~~	~~X~~	~~X~~	~~X~~	~~X~~	~~U~~	~~U~~

~~Gas Service Stations~~	~~X~~	~~X~~	~~X~~	~~X~~	~~C~~	~~C~~
Governmental services, public utility offices and exchanges, excluding storage or repair services	X	X	X	X	P	P
Headquarters buildings of charitable, philanthropic, and welfare organizations, provided that their primary activities are administrative and clerical rather than residential in nature	X	X	X	X	P	P
Heavy Industry, as defined by this Ordinance, including, but not limited to, chemical manufacturing and processing plants, explosives manufacturing, pulp and paper mills, and similar manufacturing activities	X	X	X	X	X	C
Live/Work Dwelling subject to the standards of Table 411: Use/Zone-Specific Standards Matrix~~Home Occupation~~	P	P	P	P	C	C
Hospitals, nursing homes, and convalescent homes	X	X	X	X	C	C
Hotels	X	X	X	X	P	P
Indoor commercial recreation establishments, such as bowling alleys, billiard parlors, skating rinks and similar establishments	X	X	X	X	C	C
Indoor theaters, assembly halls, ballrooms and similar places of assembly	X	X	X	X	C	C
Keeping of cattle and horses owned by members of the family occupying the premises, but not to exceed one (1) head per 20,300 square feet of lot area. All other instances are considered conditional except as provided herein.	P	X	X	X	X	X
Libraries	X	C	C	C	C	C
Light Industry~~ies such as~~, ~~but no more~~as defined by this Ordinance, including, but not limited to, ~~objectionable or intensive in character than:~~ jewelry manufacturing, clothing and apparel manufacturing, furniture manufacturing and assembly, electronics assembly, packaging operations, and similar manufacturing activities that do not constitute Heavy Industry~~er~~	X	X	X	X	X	C
Manufacturing incidental to a permitted use subject to the standards provided in Table 411: Use/Zone-Specific Standards Matrix~~is permitted, but subject to the following limitations: a. All products incidental to a permitted use which are manufactured or processed on the premises shall be sold at retail only and on the premises only. b. Such manufacturing shall be restricted to not over fifty (50) percent of the ground floor area of the building allocated to the permitted use.~~	X	X	X	X	U~~P~~	U~~P~~
Medical and dental offices and clinics	X	X	X	X	P	P
Membership Organizations	C	X	X	X	P	P
Mobile Food Unit	X	X	X	X	P	P
Model Homes	C	C	C	C	C	C
Noncommercial farming and agriculture, not including the keeping of livestock	P	X	X	X	X	X
~~Nursery Schools and Day Care Centers~~	~~C~~	~~C~~	~~C~~	~~C~~	~~C~~	~~C~~
~~Offices related to any of the following occupations: executive, administrative, professional, accounting, banking, writing, clerical, stenographic, graphic art, real estate, and sales~~	~~X~~	~~X~~	~~X~~	~~X~~	~~P~~	~~P~~
Outdoor commercial recreation establishments	X	X	X	X	C	C
Outdoor sales of nursery stock	X	X	X	X	C	C
Pawn shops	X	X	X	X	P	P
Personal services such as: barbers, beauty shops, health clubs, laundries and cleaners, mortuaries.	X	X	X	X	P	P
Pet shops	X	X	X	X	C	C
Printers and print shops	X	X	X	X	P	P
Privately owned and operated recreation areas and centers	C	X	X	X	P~~X~~	P~~X~~
~~Public buildings~~	~~X~~	~~X~~	~~C~~	~~C~~	~~C~~	~~C~~
Public buildings ~~other than a hospital~~	C	C	C	C	C	C
Public utility buildings, structures, or appurtenances thereto for public service use	C	C	C	C	C	C

Publicly owned and operated parks and recreation areas and centers	P	P	P	P	C	C
Radio and TV studios provided that no masts, towers, or antenna used for transmission or broadcasting purposes are erected on the premises	C	X	X	X	P	P
Repair services such as, but no more objectionable or intensive in character than, watches, jewelry, shoes, locksmith, minor household appliances	X	X	X	X	P	P
Research and Development	X	X	X	X	U	U
~~Residential use of a building, including apartment houses, when in the opinion of the Planning and Zoning Commission, said use has little or no adverse effect on the public health, safety and general welfare. Residential use with historic precedence in the subject buildings are exempt from the well-being criteria but remain subject to nonconforming use clauses.~~	~~X~~	~~X~~	~~X~~	~~X~~	~~C~~	~~C~~
Restaurant						
Consumption on premises outside of enclosed building	X	X	X	X	C	C
Excluding live entertainment ~~or dancing~~[1]	X	X	X	X	P	P
Including live entertainment ~~or dancing~~	X	X	X	X	C	C
Retail Ssales Establishment~~of apparel and accessories, dry goods, foods, drugs, flowers and plants, garden supplies, hardware, gifts and novelties, pet and hobby supplies, art and art supplies, jewelry, liquor, tobacco, newspapers and magazines, music and records, household supplies, stationary, books, paint, wallpaper and glass, sporting goods, toys, variety store goods, appliances, autoparts and supplies, furniture, office supplies, leather and leather products, carpet, antiques, fabrics, photo supplies, second hand and used goods and similar convenience goods~~	X	X	X	X	P	P
~~Schools: Public or private elementary and high~~	~~C~~	~~C~~	~~C~~	~~C~~	~~C~~	~~C~~
Spirituous liquor tasting facilities	X	X	X	X	C	C
Taxi stands, bus stops, parking lots and garages	X	X	X	X	C	C
~~Telecommunications Facility~~						
Temporary buildings for uses incidental to construction work, which shall be removed upon completion of or abandonment of the construction work.	P	P	P	P	C	C
Temporary outdoor sales. Displays and other outdoor activities	X	X	X	X	C	C
Viniculture use, subject to the standards of Table 411: Use/Zone-Specific Standards Matrix~~pursuant to Chapter 16, "Vineyards," of the Jerome Town Code~~	C	X	X	X	X	X
Warehouses	X	X	X	X	X	C
Wholesale establishments	X	X	X	X	X	C
Wireless Communication Facilities, subject to the standards of Table 411: Use/Zone-Specific Standards Matrix	C	C	C	C	C	C
Any other such uses as determined by the ~~Planning and Zoning Commission and approved by the Town Council~~Zoning Administrator to be similar to those uses permitted in the zoning district ~~listed above~~ and not detrimental to the public health, safety and general welfare in accordance with the provisions of this Ordinance	X	X	X	X	P	P
Any other such uses as determined by the Zoning Administrator to be similar to those uses conditionally permitted in the zoning district and not detrimental to the public health, safety and general welfare in accordance with the provisions of this Ordinance	X	X	X	X	C	C

SECTION 411. USE/ZONE-SPECIFIC STANDARDS MATRIX

Table 411: Use/Zone-Specific Standards Matrix

Use	Zone	Standard
Adaptive Residential Reuse	AR, R1-10, R1-5, R-2, C-1, I-1	1. Residential use of a building or portion of a building is permitted when in the opinion of the Zoning Administrator, said use has little or no adverse effect on the public health, safety and general welfare; or 2. Residential uses are permitted by right in a building with a documented historic residential use, whether that use is active or not
Beekeeping	AR, R1-10, R1-5, R-2, C-1, I-1	The following standards and requirements apply to the keeping of any hive, colony, or apiary bees within the town limits: 1. All persons shall be required to obtain a conditional use permit prior to the keeping of bees. The application form shall include the name, address and telephone number of the person seeking the permit as well as the name, address, and telephone number of the property owner. If the applicant is other than the property owner, then the application shall also include written permission of the owner for the use of the property for keeping a hive, colony, or apiary. The form shall also include a drawing of the property indicating the location for the keeping of the hive, colony or apiary and an acknowledgement that, prior to the placing of the hive, colony or apiary upon the property, an adequate supply of water and other nutrients are available on the property near the hive, colony or apiary. 2. Upon receipt of a beekeeping application, and at least 15 days prior to review by the Planning and Zoning Commission, public notification shall be mailed by the Town to properties within 100 feet of the subject property. 3. No more than two hives shall be allowed on a parcel. 4. Hives shall be located in the area behind the primary structure and in front of the rear lot line and set back from the side and rear property lines a minimum of five (5) feet. 5. A flyway barrier consisting of a solid wall, fence, dense vegetation, or combination of these materials at least six (6) feet high shall be provided and extend at least ten (10) feet beyond the hives on each end of an apiary. 6. Each beekeeper shall ensure that a constant and easily accessible supply of fresh water and other nutrients of sufficient quantity to meet the needs of all bees being maintained or kept is always available to the bees so that they are discouraged from congregating at pet water bowls, birdbaths, pools, spas or other water sources where they may cause human or domestic pet contact.

		7. Initial hives shall contain a queen selected from stock bred for gentleness, and bees who are relatively gentle and non-defensive. If a colony becomes too defensive, then the beekeeper shall be obligated to move that colony to a different location or to replace the queen with a gentler queen. 8. The first violation of this Section shall be treated as a petty offense. All subsequent violations within a succeeding two-year period shall be treated as Class I misdemeanors, subject to penalties as set forth in Article 1-8 of the Jerome Town Code. 9. The provisions of this Section shall not apply to any property owner upon whose property a swarm of transient bees is attempting to or has established a domicile. 10. Any honeybee colony not residing in a structure intended for beekeeping, or any colony residing in a standard or homemade hive that, by virtue of its condition, has obviously been abandoned by the beekeeper, or any hive, colony or apiary which does not contain the water and nutrient requirements of standard 6 of these requirements or any hive, colony or apiary for which no permit has been issued, is unlawful and shall be deemed a public nuisance. 11. The Town, upon a complaint, may take any actions necessary to remove the abandoned hive, colony, or apiary from the property. [Ord. 474, 8/10/21 *NOTE: Ord. 474 incorrectly established the "Beekeeping" paragraph as Paragraph O. This was corrected during codification to Paragraph P.]
Live/Work Dwelling	AR, R1-10, R1-5, R-2, C-1, I-1	1. Home occupations shall be clearly incidental and subordinate to the use of the property and dwelling unit for dwelling purposes, and shall not change the character thereof. 2. There shall be no employees other than members of the immediate family residing on the premises. 3. No business shall be conducted which requires delivery vehicles or other services not customary to a residence. 4. Signs shall be subject to applicable provisions of Section 509. 5. All materials and equipment used and maintained in connection with a home occupation must be used and stored inside the dwelling and accessory buildings. 6. No public display of items for sale shall be permitted. 7. A home occupation shall not create any nuisance or hazard, or other offensive condition such as that resulting from noise, smoke, fumes, dust, odors or other noxious emissions. Electrical or mechanical equipment

		that causes fluctuation in line voltage, creates any interference in either audio or video reception or causes any perceivable vibration on adjacent properties is not permitted. 8. The use shall not generate more pedestrian or vehicular traffic than is typical to the zone in which it is located. [Ord. No. 442]
All Permitted or Conditional Uses of the Zoning District	AR	1. Cattle, horses, sheep, goats, dogs, cats, birds, fowl, and any other living animals, and the pens, stalls, stables, yards, shelters, cages, areas, places, and premises where they are held or kept, shall be so maintained that flies, insects, or vermin, rodent harborage, odors, ponded water, the accumulation of manure, garbage, refuse or other noxious material do not become a public health nuisance and do not disturb the peace, comfort, or health of any person. 2. Any person, firm, or corporation is prohibited from keeping or sheltering any animal, bird, or fowl other than a household pet within one hundred (100) feet of a building, other than his own, used for human habitation. 3. Pigs shall not be kept within the city limits.
Viniculture	AR	1. The irrigated area in any parcel of viniculture shall not exceed one-half (1/2) acre. 2. Adjoining parcels including up to one-half (1/2) acre of irrigated area shall be considered separate parcels for the purposes of this Article. 3. A separate water meter shall be required for each parcel of viniculture, and each shall require an application for water service and payment of applicable water hookup fees, in accordance with the provisions of Chapter 13, "Water," of the Jerome Town Code. 4. Water usage for each parcel used for viniculture shall be subject to Town water restrictions. 5. If water availability decreases for any reason, including but not limited to drought, climate conditions or system failure, restrictions may be placed on water use according to the Town's Demand Reduction Strategies or any emergency measures in place or enacted at any future time. 6. The Town of Jerome shall not be held responsible for any loss of revenue or crop failures experienced as a result of water restrictions placed by the Town. 7. Flood irrigation will not be permitted. 8. A plan for a drip irrigation system must be submitted as provided in Section 16-5-2 below. 9. Each parcel used for viniculture activities shall require a Conditional Use Permit

		10. Conditional Use Permit applications for viniculture activities shall be required to: a. Provide estimated peak monthly water usage for each parcel of viniculture. b. Demonstrate that fifty percent (50%) of the proposed peak monthly water use can be provided through methods other metered distribution, such as catchment, cistern, hauling, greywater or overflow. c. Provide a plan for drip irrigation in conjunction with the site plan. d. Provide a written release holding the Town of Jerome harmless for any loss of revenue, crop failures, or additional expenses experienced as a result of restrictions and regulations imposed by the Town for purposes of controlling water supply, soil erosion, vista protection slope restrictions, water drainage, planning and zoning, and restoration of natural vegetation upon termination of conditional use permit. e. Provide a fully-executed agreement to waive rights and remedies under Arizona Revised Statutes §12-1134 (Prop 207) 11. Viniculture operations are strongly encouraged to utilize organic methods and minimize the use of chemicals. The Town reserves the right to place restrictions in this regard in accordance with regulations or recommendations which may be promulgated by the Town, County, State or Federal government. 12. Town water shall not be provided for irrigation, agriculture or viniculture located outside of Town limits, except as provided herein. 13. Vineyards located outside of Town limits which are in existence and which purchase water from the Town of Jerome as of the adopted date of this Ordinance will be entitled to continue to purchase Town water at rates established from time to time by the governing body, subject to the standards above. 14. Vineyards located outside of Town limits which are in existence and which purchase water from the Town of Jerome as of the adopted date of this Ordinance will be required to submit documentation to the Town regarding the size of the area of their plantings and the number of vines planted. This information will be subject to verification by the Town of Jerome. 15. Any expansion of an existing vineyard outside of Town limits shall be considered a new vineyard for the purposes of this Article, and will not be eligible to purchase water from the Town of Jerome. 16. Vineyards located outside of Town limits which receive water from the Town of Jerome shall be

		subject to all of the provisions of Chapter 13, "Water," of the Jerome Town Code.
Manufacturing incidental to a permitted use	C-1, I-1	1. All products incidental to a permitted use which are manufactured or processed on the premises shall be sold at retail only and on the premises only. 2. Such manufacturing activity shall be restricted to not over fifty (50) percent of the ground floor area of the building allocated to the permitted use, unless in the opinion of the Town Council such activity is not detrimental to public health, safety and general welfare.
Research and Product Development	C-1, I-1	1. All activities shall be conducted entirely within enclosed buildings
All Permitted or Conditional Nonresidential Uses of the Zoning District	C-1	1. All activities, except as otherwise addressed herein, shall be conducted entirely within enclosed buildings. 2. Outdoor storage or display of goods or materials shall be prohibited. 3. Warehousing or indoor storage of goods or materials, exceeding that normally incidental to permitted uses, shall be prohibited.
Wireless Communication Facilities	AR, C-1, I-1	1. New wireless communication facilities~~communication towers~~ shall be stealth design to minimize or mitigate the adverse visual impact through proper design and aesthetics that ensure the communication tower is compatible with the built environment in which it is located. Because of differing circumstances specific to each site, a communication tower that is considered to be stealth in one location may not be considered to be stealth in a different location. Methods of stealth design include, but are not limited to: a) Design that mimics surrounding existing vegetation not to exceed forty feet in height. b) Mounting antennas on existing structures that blend with the architecture of the structure on which the antennas are located. c) Using color schemes that make the communication tower less noticeable. d) Using church steeples, clock towers, bell towers, roof features or other such vertical architectural elements to conceal antennas and equipment. e) Placing antennas on new or existing street signs, outdoor lighting poles, flag poles, windmills (both functional and faux), chimneys, cupolas, silos, smokestacks and utility poles which are designed to match the context and color of the host structure. 2. The applicant shall submit documentation detailing that applicable Federal Communications Commission and Federal Aviation Administration regulations have been reviewed and that the regulations are being

		complied with or that the communication tower is exempt from regulation prior to the issuance of the building permit. 3. The applicant shall submit with the site plan before and after photo simulations showing the tower and surrounding area. 4. Applicants for cellular phone antennas must provide evidence in writing that at least one cellular phone provider is committed to located on the tower. 5. For new towers the applicant shall submit a narrative explanation describing the community necessity for the new tower and resulting increase in coverage. The narrative shall list, and include a discussion of, the pros and cons of each prospective new tower site and co-location opportunity considered (along with maps showing the locations of each site) and shall state the reasons why each of the alternative sites and co-locations was not considered to be feasible. The narrative report shall be accompanied by before and after propagation maps prepared and signed by a radio frequency engineer evidencing that a gap in coverage exists and demonstrating how the proposed tower will eliminate the existing gap. 6. Facilities owned and operated by the Town for its use are not subject to the standards of this table. 7. Collocation of small wireless facilities within a right-of-way that are exempt from zoning pursuant to A.R.S. § 9-592 (I) or (J) do not require a conditional use permit or other zoning approval.
All Permitted or Conditional Nonresidential Uses of the Zoning District	I-1	1. NOISE: At no point on the property line shall the sound pressure level of any individual operation exceed the decibel levels in the designated octave bands of Table 411.a. (Excluding operation of motor vehicles or other transportation facilities.) Sound levels shall be measured with a sound level meter and associated octave band filter manufactured according to standards prescribed by the American Standards Association. Measurements shall be made using the flat network of the sound level meter. Impulsive type noises shall be subject to the performance standards provided that such noises shall be capable of being accurately measured with such equipment. Noise capable of being so measured, for the purpose of this section, shall be those noises which cause rapid fluctuations of the needle of the sound level meter with a variation of not more than plus or minus two (2) decibels. Noises incapable of being so measured, such as those of an irregular or intermittent nature, shall be controlled so as not to become a nuisance to adjacent uses.

		2. SMOKE: No emission of smoke from any source shall be permitted to exceed a greater density than that density described as No. 1 on the Ringleman Chart. However, smoke may be emitted, which is equal to but not darker than No. 2 on the Ringleman Chart, for not more than four (4) minutes in any thirty (30) minute period. For the purpose of grading the density of smoke, the Ringleman Chart, as published by the U.S. Bureau of Mines shall be the standard. 3. GLARE OR HEAT: Any activity producing intense glare or heat shall be performed within a completely enclosed building in such a manner as not to create a nuisance or hazard along lot lines. 4. VIBRATION: No vibration shall be permitted which is discernible beyond the lot line to the human sense of feeling for three (3) minutes or more duration in any one (1) hour of the day between the hours of 7:00 a.m. to 7:00 p.m., or of thirty (30) seconds or more duration in any one (1) hour during the hours of 7:00 p.m. and 7:00 a.m. 5. FLY ASH, DUST, FUMES, VAPORS, GASES AND OTHER FORMS OF AIR POLLUTION: No emission shall be permitted which can cause damage to health, to animals, or vegetation, or other forms of property, or which can cause any excessive soiling. 6. LIQUIDS AND SOLID WASTE: No wastes shall be discharged in the public sewage system which endangers the normal operation of the public sewage system. 7. ODORS: No emission of odorous gases or other odorous matter shall be permitted in such quantities as to be offensive in such a manner as to create a nuisance or hazard beyond the property lines.

Table 411.a: Octave Bands

Octave band cycles per second	**Maximum sound pressure** level in decibels .0002 dynes per CM^2
0 - 75	72
75 - 150	67
150 - 300	59
300 - 600	52
600 - 1200	46
1200 - 2400	40
2400 - 4800	34
Above 4800	32

SECTION 412. DEVELOPMENT STANDARDS MATRIX

Table 412: Development Standards Matrix

	Zone					
Development Standard	AR	R1-10	R1-5	R-2	C-1	I-1
Minimum Lot Area	10,000 SF	10,000 SF	5,000 SF	5,000 SF	None	None
Minimum Lot Width	100 Feet	100 Feet	50 Feet	50 Feet	None	None
Minimum Square Footage of Dwelling/Building	850 SF of enclosed floor space exclusive of any attached garage	850 SF of enclosed floor space exclusive of any attached garage	850 SF of enclosed floor space exclusive of any attached garage	850 SF of enclosed floor space exclusive of any attached garage	None	None
Maximum Lot Coverage	40%, including main building and all accessory buildings	40%, including main building and all accessory buildings	60%, including main building and all accessory buildings	~~Not more than sixty (~~60%~~,)~~ including ~~percent of the net area of the lot may be covered by the~~ main building and all accessory buildings	None	None
Setbacks						
Front[1]	20 Feet	20 Feet	10 Feet	10 Feet	10 Feet	10 Feet
Rear	20 Feet[2]	20 Feet[2]	20 Feet[2]	20 Feet[2]	20 Feet[3]	20 Feet[3]
Side	10 Feet[4]	10 Feet[4]	5 Feet[4]	5 Feet[4]	Notes[4, 5]	Notes [4, 5]
Maximum Building Height	25 Feet[6]	25 Feet[6]	25 Feet[6]	25 Feet[6]	25 Feet[7]	25 Feet[7]
Accessory Buildings[8]						
Setbacks	Detached accessory buildings shall meet all required setbacks and maintain a space of five (5) feet from the main building or other structures.	Detached accessory buildings shall meet all required setbacks and maintain a space of five (5) feet from the main building or other structures.	Detached accessory buildings shall meet all required setbacks and maintain a space of five (5) feet from the main building or other structures.	Detached accessory buildings shall meet all required setbacks and maintain a space of five (5) feet from the main building or other structures.	Detached accessory buildings shall meet all required setbacks and maintain a space of five (5) feet from the main building or other structures.	Detached accessory buildings shall meet all required setbacks and maintain a space of five (5) feet from the main building or other structures.
Maximum Height	Detached accessory buildings shall be constructed to a height not greater than fourteen (14) feet to the peak or highest point of the roof, as defined in "Accessory Building, Height of."	Detached accessory buildings shall be constructed to a height not greater than fourteen (14) feet to the peak or highest point of the roof, as defined in "Accessory Building, Height of."	Detached accessory buildings shall be constructed to a height not greater than fourteen (14) feet to the peak or highest point of the roof, as defined in "Accessory Building, Height of."	Detached accessory buildings shall be constructed to a height not greater than fourteen (14) feet to the peak or highest point of the roof, as defined in "Accessory Building, Height of."	Detached accessory buildings shall be constructed to a height not greater than fourteen (14) feet to the peak or highest point of the roof, as defined in "Accessory Building, Height of."	Detached accessory buildings shall be constructed to a height not greater than fourteen (14) feet to the peak or highest point of the roof, as defined in "Accessory Building, Height of."

[1] The minimum front yard setback shall be ten (10) feet, except that where adjacent buildings within one hundred (100) feet establish a different front building setback, a new building may align with that established setback. Where a lot is situated between two (2) such buildings, the front yard setback shall be established by a line connecting the nearest front corners of the adjacent buildings. Where a lot has frontage on two (2) streets, the required front yard shall be provided on both streets unless access is denied to one of the streets, then a rear yard shall be required.

[2] There shall be a rear yard of not less than twenty (20) feet in depth, except where the rear lot line is in common with, or separated by an alley from~~,~~ the side lot line of another lot, there shall be a rear yard of not less than ten (10) feet in depth. Where the rear lot line abuts an alley, the required rear yard shall be measured from the center line of the alley.

[3] There shall be a rear yard of not less than twenty (20) feet in depth, except where the rear lot line is in common with or separated by an alley from the side lot line of a lot in a commercial or industrial zone, there shall be a rear yard of not less than ten (10) feet in depth.

[4] Where a side lot line abuts a street, the side yard shall be considered a front yard for the purpose of determining width.

[5] Where the side lot line is in common with the side lot line of a property in a commercial or industrial zone, no side yard shall be required on that side. Where the side lot line is in common with the side lot line of a property in a residential zone, the side yard requirements of the residential zone shall apply to that side yard, provided nothing shall require such a side yard to be greater than ten (10) feet in width.

[6] As defined in "Building, Height Of". On slopes over forty-five percent (45%) there will be a one (1) foot reduction in height for each additional five percent (5%) of slope or portion thereof. Notwithstanding these provisions, no face of any building shall exceed thirty-five (35) feet above the low point of original grade as defined in "original grade". (see Appendix for diagrams).

[7] The maximum building height shall not exceed that established by any building within one hundred (100) feet on either or both sides of the lot. Where more than one such building is within one hundred (100) feet of the lot then the maximum building height of the nearest such building shall be the maximum building height of the lot. Except that where the lot is between two (2) such buildings, each within one hundred (100) feet of the lot, then the maximum building height of the center of this lot shall be that established by a line joining the highest point of the other such buildings. Nothing in the above shall require that the maximum building height in this district be less than twenty-five (25) feet. (see Appendix for diagrams). Notwithstanding these provisions no face of any building shall exceed thirty-five (35) feet above the low point of original grade as defined in "original grade."

[8] Accessory buildings shall be considered in determining yard, lot and area requirements. Accessory buildings shall not be used for human habitation.

~~ARTICLE V~~ARTICLE V: USE REGULATIONS

SECTION 501. NONCONFORMING ~~-~~SITUATIONS

A. DEFINITIONS

A nonconforming situation ~~is a condition that~~ occurs when, on the effective date of this Ordinance, any prior ~~or a previous~~ Ordinance, or on the effective date of an Ordinance text amendment or rezoning, an existing lot, structure, building, sign, development, or use ~~of an existing lot or structure~~ does not conform to ~~one or more or~~ the regulations currently applicable to the district in which the lot, structure, building, sign, development or use is located.

[Ord. No. 293]

B. PURPOSE

While permitting the use and maintenance of nonconforming structures, this section is intended to limit the number and extent of nonconforming uses and structures by prohibiting their being moved, altered, enlarged, or restored after destruction in a manner which would increase the discrepancy between conditions existing at the time of adoption of the Ordinance and the standards prescribed in this Ordinance, except as provided for by A.R.S. 9-462.02.

C. APPLICATION

1. Any nonconforming structure or portion thereof declared unsafe by a proper authority may be restored to a safe condition.
2. The lawful use of land, buildings, or structures existing on the effective date~~at the time of the passage~~ of this Ordinance, June 14, 1977, or any amendment thereof, may continue even ~~al~~though such use does not conform to the provisions of this Ordinance ~~hereof for said land., may be continued, but~~ However, if such nonconforming uses are~~is~~ discontinued for a period of six (6) months, any future use of said land or structure shall be in conformity with the provisions of this Ordinance.
3. No nonconforming use shall be extended to replace a conforming use.
4. A nonconforming use of a building or lot shall not be changed to another nonconforming use whatsoever. Changes in use shall be made only to a conforming use.
5. Once changed to a conforming use, no building or land shall be permitted to revert to a nonconforming use.
6. A nonconforming building may not be reconstructed or structurally altered during its life to an extent which would increase the discrepancy between conditions existing at the time of the adoption of this Ordinance and the standards prescribed in this Ordinance.
7. No repairs, alterations, or additions shall be made to any building used for a nonconforming use or a nonconforming building which has been damaged by fire, flood, wind, earthquake, explosion or other calamity, act of God, ~~or~~ act of the public enemy, or ~~which has been dismantled or demolished~~ by the owner, to an extent which would increase the discrepancy between conditions at the time of such damage and the standards prescribed in this Ordinance.
8. A nonconforming use shall not be extended, but the extension of a lawful use to any portion of a nonconforming building which existed prior to the enactment of this Ordinance shall not be deemed the extension of such nonconforming use.
9. Nothing herein contained shall require any change in plans, construction, or designated use of a building for which a building permit has been issued prior to the enactment of this Ordinance, provided the construction shall be diligently prosecuted within sixty (60) days of the date of this Ordinance, and the building is completed and used according to such plans as filed within one (1) year from the date of the Ordinance.

~~10.~~ A building, or portion thereof, designed or clearly intended for a nonconforming use, but not so used at the time of the effective date of this Ordinance, may be used for such nonconforming purpose if the use commences within six (6) months of the effective date of this Ordinance and no alteration occurs except as permitted herein. If the use does not commence within six (6) months, the building shall thereafter be used only in conformity with this Ordinance. ~~A nonconforming building or portion thereof which was specifically designed, or beyond a reasonable doubt, intended by the nature of its arrangement and construction to be used in any way which would be nonconforming under this Ordinance, but was not so used at the time this Ordinance became effective, may, if not altered or repaired as prohibited elsewhere in this Ordinance be occupied or used for the purpose for which it was designed, arranged or intended provided such building is so used within six (6) months after the effective date of this Ordinance. Otherwise the use of such building shall conform to the provisions of this Ordinance.~~

10.

11. Notwithstanding any other provisions of this Ordinance, any automobile wreck yard or any other junkyard in existence in any zone at the date of enactment of this Ordinance shall (have), at the expiration of three (3) from such date, become a prohibited and unlawful use and shall be (have been) discontinued.
12. Whenever the boundaries of a zone shall be changed so as to transfer an area from one zone to another zone of a different classification, the foregoing provisions shall also apply to any nonconforming uses existing therein.
13. Nothing in this article shall be interpreted as authorization for approval of the continuance of the use of a building or premises in violation of regulations in effect at the time of the effective date of this Ordinance.
14. Notwithstanding any other provisions of this Ordinance, a building may be constructed on any lot of record before the adoption of this Ordinance in any zone in which such buildings are permitted even though such lot fails to meet the area or width requirements for with the zone, except that such construction shall conform to any lot coverage, yard and parking and loading requirements of the zone.
15. Where two (2) or more vacant contiguous lots of record, having continuous frontage, are owned by the same person at the time of the passage of the controlling ordinance, the land included in the lots shall be considered to be an undivided parcel and no portion of said parcel shall be used as a building site or sold which does not meet the area and width requirements of the zone in which the lot is located.

[Ord. No. 293]

SECTION 502. GENERAL PROVISIONS

A. APPLICATION

Except as hereinafter provided, no building, structure, or premise shall be used and no building or structure or part thereof shall be constructed, altered, repaired, improved, moved, removed, erected, demolished, or materially altered except in conformity with the provisions of the zone in which it is located. The provisions of this section are applicable to all zoning districts. Any use that is not specifically permitted is hereby declared to be a prohibited use, except as hereinafter provided.

B. USE RESTRICTIONS

1. PRINCIPAL USES: Only those uses and groups of uses specifically designated as "Permitted Principal Uses" in zoning district regulations shall be permitted as principal uses; all other uses shall be prohibited as principal uses, except as otherwise provided herein.
2. CONDITIONAL USES: Certain specified uses designated as "Conditional Uses" may be permitted as principal uses subject to special conditions of location, design construction, operation, and maintenance ~~hereinafter~~ specified in this Ordinance or imposed by the Planning and Zoning Commission.
3. ACCESSORY USES: Uses that are normally accessory and incidental to a permitted principal or conditional uses shall be permitted as ~~hereinafter~~ specified in this Ordinance.
4. UNSPECIFIED USES: Whenever a use is proposed which is not listed as a permitted or conditional use in any zone district, the Zoning Administrator shall complete a review of the proposed use to determine its basic characteristics and similarity to existing permitted uses and make a determination as to whether the proposed use is permitted within the zone district. The Zoning Administrator's determination can be appealed as specified in this Ordinance.~~and submit this report to the Planning and Zoning Commission. The Commission shall review the Administrator's report and recommendation and determine in which zone district the proposed use should be placed and forward a recommendation to the Town Council. The Town Council, after reviewing the Administrator's report, Commission's Recommendation and other testimony, shall determine the similarity to the listed permitted uses and shall determine by minute order the proper zone district for the location of the proposed use. A copy of the minute order shall be added to the permitted use section of the appropriate zone district.~~

C. NONCONFORMING LOTS OF RECORD

1. Notwithstanding any other provisions of this ordinance, a building may be constructed on any lot of record before the adoption of this Ordinance in any zone in which such buildings are permitted, even though such lot fails to meet the area or width requirements for within the zone, except that such construction shall conform to any lot coverage and yard requirements of the zone.
2. Where two (2) or more vacant contiguous lots of record are owned by the same person at the time of the passage of the controlling ordinance, the land included in the lots shall be considered to be an undivided parcel and no portion of said parcel shall be used as a building site or sold which does not meet the area and width requirements of the zone in which the lot is located.

D. REDIVIDING OF RECORDED LOTS

No lot may be divided to create a lot not in conformance with these regulations, unless. No lot shall be divided or combined in any manner other than through subdivision procedures as specified by the Subdivision Regulations.

E. STREET AND UTILITY REQUIREMENTS

1. All lots shall abut a public street or legally recorded easement.
2. A building permit shall not be issued for a lot which abuts an undedicated portion of a partly-dedicated public street.

3. A building permit shall not be issued for any lot for which public sewerage or water supply is not available, unless and until the proposed mode of water supply and sewage disposal has been reviewed and approved in writing by the Yavapai County Health Department.

F. DRIVEWAYS

1. General Requirement

   All lots shall obtain vehicular access to a public street, either directly or through an approved shared-access easement, private access easement, or private street. No driveway shall be constructed, relocated, widened, resurfaced, altered, or otherwise modified without first obtaining the necessary permit(s) from the Town.

2. Driveways May Be Denied

   The Town may deny additional driveway connections where:

   a. Reasonable access already exists through an existing driveway or easement;

   b. Multiple driveways would create traffic or safety concerns;

   c. There is not sufficient space for adequately extending a driveway to park a vehicle entirely outside the right-of-way; or

   d. The property does not provide sufficient on-site area to:

      i. Allow vehicles to safely enter and exit the property; or

      ii. Prevent vehicles from routinely backing into the public street when leaving the site.

3. Driveway Surfacing

   Driveway surfacing shall extend from the parking area to the edge of the public roadway pavement and shall continue within the public right-of-way to meet existing roadway surfacing, or to a point designated by the Town Engineer where future roadway surfacing is anticipated.

   Acceptable surfacing materials shall be established by Town standards and may include asphaltic concrete, portland cement concrete, chip seal, permeable pavement, or other approved materials.

4. Residential Development

   Single-family residential driveways may remain unsurfaced unless otherwise required by the Town Engineer. Where surfacing is installed, it shall comply with Section 502.F.4.

5. Multifamily and Nonresidential Development

   All multifamily and nonresidential development shall provide paved driveway access between the public street and all required parking, loading, and circulation areas, unless modified by the Town Engineer to meet site constraints such as, but not limited to, topography, existing nearby access, and recorded easements. Such surfacing shall extend through the right-of-way as required by the Town Engineer.

6. Driveway Alterations

   Any relocation, widening, reconstruction, pavement change, additional curb cut, or modification of an existing driveway shall require a permit approved by the Town.

7. Culverts and Drainage

   Where a culvert is required, culvert ends shall be protected against crushing and erosion and shall conform to Town engineering standards. Alternative treatments may be approved by the Town Engineer.

8. Access Management

The number, width, spacing, and location of driveways shall be subject to approval by the Town Engineer. The Town may require shared driveways, cross-access easements, reciprocal access agreements, or driveway closures when necessary to promote traffic safety and efficient roadway operations.

~~F.~~G. SITE UNSUITABILITY

No land shall be used or structure erected where the land is held by the Commission to be unsuitable for such use or structure by reason of flooding, concentrated runoff, inadequate drainage, adverse soil or rock formation, extreme topography, low percolation rate or bearing strength, erosion susceptibility, or any other features likely to be harmful to the health, safety and general welfare of the community. The commission, in applying the provisions of this section, shall state in writing the particular facts upon which its conditions are based. The applicant shall have the right to present evidence contesting such determination to the Council if he desires, whereupon the Council may affirm, modify, or withdraw the determination of the unsuitability.

~~G.~~H. DUMPING OR DISPOSAL

1. The use of land for the dumping or disposal of scrap iron, junk, garbage, rubbish, or other refuse, or of ashes, slag, or other industrial wastes or by-products, shall be prohibited in every district except as otherwise provided in this Ordinance.
2. The dumping of dirt, sand, rock or other material excavated from the earth shall be permitted in any district, provided that the surface of such material is graded, leaving the ground surface in a condition suitable for other use permitted in the district, provided that such fill does not so increase the elevation of the site as to prevent its development or use for other purposes and provided that such does not increase the susceptibility of the ground to erosion, landslide, flooding, or result in any other dangerous condition.
3. No person, firm, or corporation shall strip, excavate, or otherwise remove top-soil for sale or for use other than on the premises from which the same shall be taken, except in connection with the construction or alteration of a building on such premises and excavation or grading incidental thereto.
4. No yard or other open space surrounding an existing building in any residential zone, or which is hereinafter provided around any building in any residential zone, shall be used for the storage of junk, debris, or abandoned or inoperable vehicles; except as specifically permitted herein, and as provided and regulated in any other applicable Town Ordinances.

~~H.~~I. YARD, LOT, AND AREA REQUIREMENTS

1. No building shall be erected; nor shall any existing building be altered, enlarged, moved, or rebuilt, nor shall any open space surrounding any building be encroached upon or reduced in any manner, except in conformity with the yard, lot, area and building location regulations hereinafter designated for the zone in which such building or open space is located, except, as otherwise specifically provided.
2. No yard or other open space provided about any building for the purpose of complying with the provisions of these Restrictions shall be considered as a yard or open space for any other building; and no yard or other open space on one (1) lot shall be considered as a yard or open space for a building on any lot.
3. Awnings, fire-escape stairs, window-type refrigeration units, suspended or roof evaporative coolers, and forced air furnaces~~,~~ may not project more than five (5) feet over any required yard, provided that they shall be no closer than three (3) feet to any lot line.
4. Architectural details such as canopies, cornices, and eaves may project not more than three (3) feet over any required yard, provided that they shall be no closer than three (3) feet to any lot line.

5. Sills, leaders, be1t courses and similar ornamental features may project not more than six (6) inches over or into any required yard.
6. Accessory Buildings (attached) – A private automobile garage, carport or accessory building having any part of a wall in common with a dwelling shall be considered an integral part of the main building in determining yard, lot, and area requirements.
7. Accessory Buildings (detached) – Any detached accessory building or swimming pool in any zone shall not be located in the front yard, shall be at least five (5) feet from the main structure, shall be at least five (5) feet from the rear and interior side lot lines, and shall maintain side yard setbacks from the street side lot lines as required for the main structure in that zone.
8. No automobile service station pump shall be located closer than twelve (12) feet to a street property line.
9. Except as provided herein, every part of a required yard shall be open to the sky and unobstructed. Trees, shrubbery, etc., shall not be considered obstructions.
10. No portion of any deck shall be located within five (5) feet of the lot line except in those districts where residential use is not a permitted use. In those districts, decks should conform to the required yard for that zone. Decks shall not encroach into any public easement. Square footage of decks shall be included in lot coverage for each zoning district.

[Ord. No. 374]

~~I.~~J. BUILDING HEIGHT REQUIREMENTS

1. No building shall be erected, reconstructed, or structurally altered to exceed in height the limit hereinafter designated for the zone in which such building is located, except as otherwise specifically provided.
2. Height regulations established elsewhere in this Ordinance shall not apply:
   a. In any district, to church spires, belfries, cupolas and domes not for human occupancy, monuments, water towers, flagpoles, non-commercial radio or television antennas, provided that such structures and antennas shall be so located and constructed that if it should collapse, its reclining length would still be contained on the property on which it was constructed.
   b. In industrial districts, to chimneys, smokestacks, derricks, conveyors, grain elevators, or similar structures wherein the industrial process involved customarily requires a height greater than otherwise permitted, provided that such structure shall be so located and constructed that if it should collapse, its reclining length would still be contained on the property on which it was constructed.
3. In any district, the height of a deck may not exceed twenty-seven (27) feet from the natural grade.

[Ord. No. 374]

~~J.~~K. WALLS AND FENCES

1. No freestanding wall or fence shall be constructed until a permit for such construction has been issued by the Building Inspector. No such permit shall be issued until the application for such permit has been reviewed and approved by the Zoning Administrator and Historic Preservation and ~~Commission~~Design Review Board in accordance with the provisions of Section 303 and Section 304.
2. In any residential or commercial zone, no wall or fence over three (3) feet high shall be constructed or maintained nearer to the street line than the front and side walls of the building erected, nor be more than six (6) feet in height on any side or rear-lot-line. Provided, however,

that open wire fences exceeding the above heights may be built around schools and other public or quasi-public institutions when necessary for the safety or restraint of the occupants thereof.

3. No fence or wall shall contain barbed wire, electrical current or charge of electricity, broken glass, or similar hazardous materials or devices, provided, however, that fences enclosing storage areas in industrial districts may use barbed wire so long as such wire is located not less than six (6) feet above grade.

~~K.~~L. EXTERIOR LIGHTING

[CODIFIER'S NOTE: This subsection was rewritten with Ordinance 490 and moved to new **Section 502.1.**]

~~L.~~M. REMOVAL OR DEMOLITION OF BUILDINGS OR STRUCTURES

No building or structure which has been wholly or partially erected on any property located within the Town of Jerome shall be demolished or removed until a permit for such demolition or removal has been issued by the Zoning Administrator. A permit for removal or demolition of any building or structure shall not be issued until the application for such a permit has been reviewed and approved by the Historic Preservation and ~~Commission~~Design Review Board in accordance with the provisions of Section 304.

N. HOME OCCUPATIONS

~~M.~~ [CODIFIER'S NOTE: This subsection was moved to Table 411: Use/Zone-Specific Standards in Section 411 and the use renamed to Live/Work Dwelling with Ordinance 497.]

~~1. Home occupations shall be clearly incidental and subordinate to the use of the property and dwelling unit for dwelling purposes, and shall not change the character thereof.~~

~~2. There shall be no employees other than members of the immediate family residing on the premises.~~

~~3. No business shall be conducted which requires delivery vehicles or other services not customary to a residence.~~

~~4. Signs shall be subject to applicable provisions of Section 509.~~

~~5. All materials and equipment used and maintained in connection with a home occupation must be used and stored inside the dwelling and accessory buildings.~~

~~6. No public display of items for sale shall be permitted.~~

~~7. A home occupation shall not create any nuisance or hazard, or other offensive condition such as that resulting from noise, smoke, fumes, dust, odors or other noxious emissions. Electrical or mechanical equipment that causes fluctuation in line voltage, creates any interference in either audio or video reception or causes any perceivable vibration on adjacent properties is not permitted.~~

~~8. The use shall not generate more pedestrian or vehicular traffic than is typical to the zone in which it is located.~~

~~[Ord. No. 442]~~

~~N.~~O. ANIMALS AND PETS

Except as otherwise permitted in this Ordinance, the keeping of animals in connection with each dwelling shall not exceed a total of three (3) pets, such as dogs, cats, and similar household pets, exclusive of animals under the age of six (6) months, and exclusive of birds, fish and other pets which at all times are kept within a fully enclosed building or accessory building, and which do not create odor or sound which is detectable on an adjoining lot.

~~O.~~P. OFF-STREET PARKING REQUIREMENTS

1. Automobile off-street parking must be provided as required in Section 510.

2. Mobile homes, house trailers, commercial trailers, boat trailers, campers, or travel trailers shall not be stored, parked, or located in any zone other than as listed in the zone regulations, except that the storage of one boat trailer and not more than one uninhabited camper or uninhabited travel trailer shall be allowed for each residence. Such vehicles may not be stored in front yard of a residence.
3. A proposed development shall have adequate provisions for such items as convenience of access for public service vehicles, such as garbage collection vehicles, movement of emergency vehicles, and convenience of access to parking sites and other site improvements by site residents or users.
4. Ingress, egress, internal traffic circulation, off-street parking facilities, loading and service areas, and pedestrian ways shall be so designed as to promote safety and convenience.

Q. BEEKEEPING

~~P.~~ [CODIFIER'S NOTE: This subsection was rewritten with Ordinance 497 and moved to new Table 411: Use/Zone-Specific Standards in Section 411.]

~~The following standards and requirements apply to the keeping of any hive, colony, or apiary bees within the town limits:~~

~~1. All persons shall be required to obtain a conditional use permit prior to the keeping of bees. The application form shall include the name, address and telephone number of the person seeking the permit as well as the name, address, and telephone number of the property owner. If the applicant is other than the property owner, then the application shall also include written permission of the owner for the use of the property for keeping a hive, colony, or apiary. The form shall also include a drawing of the property indicating the location for the keeping of the hive, colony or apiary and an acknowledgement that, prior to the placing of the hive, colony or apiary upon the property, an adequate supply of water and other nutrients are available on the property near the hive, colony or apiary.~~

~~2. Upon receipt of a beekeeping application, and at least 15 days prior to review by the Planning and Zoning Commission, public notification shall be mailed by the Town to properties within 100 feet of the subject property.~~

~~3. No more than two hives shall be allowed on a parcel.~~

~~4. Hives shall be located in the area behind the primary structure and in front of the rear lot line and set back from the side and rear property lines a minimum of five (5) feet.~~

~~5. A flyway barrier consisting of a solid wall, fence, dense vegetation, or combination of these materials at least six (6) feet high shall be provided and extend at least ten (10) feet beyond the hives on each end of an apiary.~~

~~6. Each beekeeper shall ensure that a constant and easily accessible supply of fresh water and other nutrients of sufficient quantity to meet the needs of all bees being maintained or kept is always available to the bees so that they are discouraged from congregating at pet water bowls, birdbaths, pools, spas or other water sources where they may cause human or domestic pet contact.~~

~~7. Initial hives shall contain a queen selected from stock bred for gentleness, and bees who are relatively gentle and non-defensive. If a colony becomes too defensive, then the beekeeper shall be obligated to move that colony to a different location or to replace the queen with a gentler queen.~~

~~8. The first violation of this Section shall be treated as a petty offense. All subsequent violations within a succeeding two-year period shall be treated as Class I misdemeanors, subject to penalties as set forth in Article 1-8 of the Jerome Town Code.~~

~~9. The provisions of this Section shall not apply to any property owner upon whose property a swarm of transient bees is attempting to or has established a domicile.~~

~~10. Any honeybee colony not residing in a structure intended for beekeeping, or any colony residing in a standard or homemade hive that, by virtue of its condition, has obviously been abandoned by the beekeeper, or any hive, colony or apiary which does not contain the water and nutrient requirements of Section 502.Q.6 or any hive, colony or apiary for which no permit has been issued, is unlawful and shall be deemed a public nuisance.~~

~~11. The Town, upon a complaint, may take any actions necessary to remove the abandoned hive, colony, or apiary from the property.~~

R. ~~[ORD. 474, 8/10/21 *NOTE: ORD. 474 INCORRECTLY ESTABLISHED THE "BEEKEEPING" PARAGRAPH AS PARAGRAPH O. THIS WAS CORRECTED DURING CODIFICATION TO PARAGRAPH P.]~~SWIMMING POOLS

1. Construction

   a. All swimming pools within the Town of Jerome are to be designed and constructed in accordance with the International Swimming Pool and Spa Code, 2018 Edition, published on or after August 31, 2017, by the International Code Council Inc.

2. Enclosures

   a. A swimming pool, or other contained body of water with eighteen inches or more in depth at any point and that is wider than eight feet at any point and is intended for swimming, shall be protected by an enclosure surrounding the pool area, as provided in this section.

   b. A swimming pool or other contained body of water required to be enclosed by subsection A, whether a below-ground or above-ground pool, shall meet the following requirements:

      1) Be entirely enclosed by at least a five-foot wall, fence, or other barrier as measured on the exterior side of the wall, fence, or barrier.

      2) Have no openings in the wall, fence, or barrier through which a spherical object four inches in diameter can pass. Any horizontal parts of a wall, fence, or barrier must either:

         i. Be spaced at least 45 inches apart vertically, or

         ii. Be located on the pool side of the barrier, in which case the barrier must not have any horizontal openings wider than 1¾ inches.

         iii. Wire mesh or chain link fences shall have a maximum mesh size of one and three-quarter inches measured horizontally.

      3) The wall, fence, or barrier shall not contain openings, handholds, or footholds accessible from the exterior side of the enclosure that can be used to climb the wall, fence or barrier.

      4) The wall, fence or barrier shall be at least twenty inches from the water's edge.

      5) Gates for the enclosure shall:

         i. A pool gate must be self-closing and self-latching. The latch must either be at least 54 inches above the ground, or be located on the pool side of the gate with the release mechanism at least 5 inches below the top and no openings larger than ½ inch within 24 inches of the release. Alternatively, the gate may be secured with a padlock or similar locking mechanism that requires a key, electric opener, or combination, in which case the latch may be at any height.

         ii. Open outward from the pool.

c. If a residence or living area constitutes part of the enclosure required by subsection B for a swimming pool or other contained body of water in lieu of the requirements of subsection B, there shall be one of the following:

1) Between the swimming pool or other contained body of water and the residence or living area, a minimum four-foot wall, fence, or barrier to the pool area which meets all of the requirements of Section502. ~~Q~~R.2.b.1-.5.

2) The pool shall be protected by a motorized safety pool cover which requires the operation of a key switch that meets the American Society of Testing and Materials emergency standards 13-89 and which does not require manual operation other than the use of the key switch.

3) All ground-level doors or other doors with direct access to the swimming pool or other contained body of water shall be equipped with a self-latching device that meets the requirements of Section 502.R.2.b.5.i. Emergency escape or rescue windows from sleeping rooms with access to the swimming pool or other contained body of water shall be equipped with a latching device not less than fifty-four inches above the floor. All other openable dwelling unit or guest room windows with similar access shall be equipped with a screwed-in-place wire mesh screen, or a keyed lock that prevents opening the window more than four inches, or a latching device located not less than fifty-four inches above the floor.

4) The swimming pool shall be an aboveground swimming pool that has non-climbable exterior sides that are a minimum height of four feet. Any access ladder or steps shall be removable without tools and secured in an inaccessible position with a latching device not less than fifty-four inches above the ground when the pool is not in use.

d. This section does not apply to:

1) A system of sumps, irrigation canals, irrigation, flood control or drainage works constructed or operated for the purpose of storing, delivering, distributing or conveying water.

2) Stock ponds, storage tanks, livestock operations, livestock watering troughs or other structures used in normal agricultural practices.

3) Public or semi-public swimming pools.

4) A swimming pool or contained body of water or barrier constructed prior to the effective date of this article.

e. A person on entering into an agreement to build a swimming pool or contained body of water or sell, rent or lease a dwelling with a swimming pool or contained body of water shall give the buyer, lessee or renter a notice explaining safety education and responsibilities of pool ownership as approved by the Arizona Department of Health Services.

3. Location

a. The requirements for the location of permanent pools shall be the same as the requirements for the location of accessory buildings and structures within the property's zoning district, except that:

1) Swimming pools shall be located on a lot in compliance with all applicable setback, grading, drainage, and other requirements of this Ordinance. Pools shall be designed, constructed, operated, and maintained so that drainage, overflow, backwash, or water released from the pool does not drain onto adjacent properties or adversely impact adjacent properties or public rights-of-way.

4. Permit Required

b. No swimming pool, except temporary pools, shall be constructed, enlarged, or altered until a permit has been obtained from the Town. Application for a permit shall be accompanied by plans and specifications in sufficient detail to indicate the following:

1) Lot or plot plan showing lot lines, easements, if any, pool area plan, and elevations with dimensions drawn to scale.

2) Pool dimensions, depths and volume in gallons.

3) Type and size of filter system, filtration and backwash capacities.

4) Pool piping layout, with all pipes and valves shown, and the type of materials to be used.

5) Size, type, and rated capacity of the pool pump.

6) Location and type of water supply, and waste disposal system.

7) Location and type of all electrical fixtures.

8) Conformity with provisions of this Section as required.

9) Conformity with provisions of Town Building, Plumbing and Electrical Codes as required.

10) Conformity with The International Swimming Pool and Spa Code

c. Exceptions

~~1)~~ Any above-ground pool or water feature designed to hold less than 5,000 gallons or that is less than 18 inches deep shall not require a permit.

1)

~~being notified by the~~

SECTION 502.1 GENERAL PROVISIONS – EXTERIOR LIGHTING

[Section 502.1 created with Ord. No. 490]

A. INCORPORATION BY REFERENCE

A.R.S. Title 49, Chapter 7, Light Pollution is hereby incorporated by reference

B. PURPOSE

This section is intended to establish procedures and standards that ensure minimal light pollution, reduce glare, increase energy conservation, and afford every citizen and business of Jerome the flexibility to engage in the pursuit of safe, inexpensive lighting for the purpose of commerce and private use without detrimentally impacting the pristine nighttime environment free from light pollution, waste, trespass, or clutter.

C. APPLICABILITY

1. This chapter shall apply to all outdoor lighting, including, but not limited to, search, spot, or floodlights for:
    a. Buildings and Structures;
    b. Recreational Areas;
    c. Parking Lot Lighting;
    d. Landscape Lighting
    e. Other Outdoor Lighting
2. New lighting shall meet the requirements of this Code with regard to shielding and lamp type. The total outdoor light output after the new lighting is installed shall not exceed that on the site before the new lighting was installed, or that is permitted by this Code, whichever is less.
3. If the total cumulative increase in floor area is greater than 50 percent for single family residential or greater than 25 percent for all other uses, or if the total cumulative cost of any exterior modification, alteration or repair is greater than 25 percent of the valuation of the building as determined by the ~~Planning and~~ Zoning Administrator~~Director~~, then all exterior lighting fixtures shall comply with this Code. Cumulative modification, replacement, or repair of outdoor lighting constituting 25 percent or more of the permitted lighting output level for the parcel, no matter the actual amount of lighting already on the site, shall require all exterior lighting to comply with this Code.
4. Exemptions
    a. **Emergency Lighting**

        Lighting used only under emergency conditions, as declared by the Governor of the State of Arizona, Town of Jerome Mayor, or authorized County or Town public safety representative, shall not be subject to this Section 502.1

    b. **Seasonal Lighting**

        Temporary seasonal lighting between the months of October and January 15 shall not be subject to this Section 502.1, provided such lighting does not create glare to motorists or result in light trespass onto adjacent properties.

    c. **Lighting Required by FAA or FCC**

        Lighting required by the Federal Aviation Administration, or the Federal Communications Commission shall not be subject to this Section.

    d. **Special Events**

Special events that have been issued a special event permit shall be allowed temporary lighting for the duration of the event, provided such lighting does not create glare to motorists or result in light trespass onto adjacent properties.

e. **Street Lighting**

With the exception of shielding requirements, this Code does not apply to street lighting within Town and state rights-of-way.

5. Nonconforming Lighting

a. Existing historic nonconforming lighting in use prior to the adoption of this ordinance may continue to be used; if historic fixtures are damaged, they may be restored or repaired in efforts to preserve their historic nature.

b. Lighting that does not conform to all provisions of this Code shall be brought into compliance, in accordance with Section 502.1(C)(3). Until this time, no modification or replacement shall be made to a nonconforming fixture unless the fixture thereafter conforms to the provisions of this Code, except that identical lamp replacement is allowed.

c. In the event that an outdoor lighting fixture is abandoned or damaged to the point of requiring repairs for safe operation, the repaired or replacement fixture shall comply with the provisions of this Code.

D. DEFINITIONS

As used in this Code, unless the context clearly indicates otherwise, certain words and phrases shall mean the following:

1. *Abandonment* means the discontinuation of use for a period of six months.
2. *Adaptive Controls* means hardware and/or electronics, used in conjunction with outdoor light fixtures, intended to dynamically alter or adjust the operation of those fixtures. Examples of adaptive controls include, but are not limited to, motion/occupancy sensors, dusk-to-dawn ('astronomical') timers, and photocells.
3. *Class 1 Lighting* means all outdoor lighting used for, but not limited to, outdoor sales or eating areas, assembly or repair areas, advertising and other signs, recreational facilities, and other similar applications where color rendition is important.
4. *Class 2 Lighting* means all outdoor lighting used for, but not limited to, illumination for walkways, roadways, equipment yards, and parking lots where general illumination of the grounds is the primary concern.
5. *Class 3 Lighting* means any outdoor lighting used for decorative effects, including but not limited to architectural illumination, flag monument lighting, and illumination of trees, bushes, etc.
6. *Correlated Color Temperature (CCT)* means the temperature of a source of blackbody radiation whose spectrum best approximates the spectrum of a particular light source, expressed in units of Kelvins. Lamps with a CCT greater than 4000K are considered "cool" sources.
7. *Direct Illumination* means illumination resulting from light emitted directly from a lamp, luminaire, or reflector, not light diffused through translucent signs, or reflected from other surfaces such as the ground, building faces, or luminaire optics.
8. *Footcandle (abbreviated 'fc')* means a unit of illuminance or illumination, equivalent to the illumination produceds by a source with luminous intensity of one candela at a distance of one foot and equal to one lumen incident per square foot (approximately 10.764 lux).

9. *Fully Shielded Fixture* means that fixtures are shielded in such a manner that light rays emitted by the fixture, either directly from the lamp or indirectly from the fixture, are projected below a horizontal plane running through the lowest point on the fixture where light is emitted.
10. *Initial Lumens* means the lumens rating of a lamp at the time of manufacture, not accounting for losses due to normal lamp aging, or the lumens rating for a brand new light bulb. -Initial lumens are measured by manufacturers specifications and usually provided along with product packaging.
11. *Installed* means attached, or fixed in place, whether or not connected to a power source.
12. *Lighting Zone* means an overlay zoning system, establishing legal limits for lighting for particular parcels, areas, or districts in a community.
13. *Light Trespass* is spill light falling over property lines that illuminates adjacent grounds or buildings in an objectionable manner.
14. *Lumen* is the unit used to measure the actual amount of visible light, which is produced by a lamp as defined by the manufacturer.
15. *Luminaire* means the complete lighting assembly, less the support assembly.
16. *Lux (abbreviated 'lx')* means a unit of illuminance or illumination equal to one lumen per incident square meter (approximately 0.093 fc).
17. *Multi-class Lighting* means any outdoor lighting used for more than one purpose, when the purpose fall under the definitions for two or more lighting lasses as defined for Class 1, 2 and 3 Lighting above.
18. *Motion Sensing Lighting* means a fixture designed, and properly adjusted, to illuminate an area around a residence or other building by means of switching on a lamp when motion is detected inside an area or perimeter, and switching the lamp off when the detected motion ceases.
19. *Neon Lighting* means lighting using luminous gas filled tubes often formed into text, symbols, or decorative elements. Neon lighting includes tubes with typical diameters of 10 to 20 millimeters filled with neon, argon, xenon, or other gasses and producing various colors of light. -Not included are replaceable T-8 (1-inch diameter) and T-12 (1.5-inch diameter) or PL ("compact") fluorescent tubes.
20. *Net Acreage* means the remaining ground area of a parcel after deleting all portions for proposed and existing public right-of-way and undeveloped area.
21. *Opaque* means only that the material must not transmit light from the internal illuminating source: the color of such opaque backgrounds is not restricted.
22. *Outdoor Light Fixtures* means all outdoor illuminating devices, reflective surfaces, lamps, and other devices, either permanently installed or portable, which are used for illumination or advertisement. Such devices shall include, but are not limited to, search, spot, and floodlights for:

    d. Buildings and Structures

    e. Recreational Areas

    f. Parking Lot Lighting

    g. Landscape and Architectural Lighting

    h. Billboards and other Signs (advertising or other)

    i. Street Lighting

    j. Product Display Area Lighting

k. Building Overhangs and Open Ceanopies

23. *Person* includes a corporation, company, partnership, firm, association, or society, as well as a natural person.

24. *Planning and Zoning Director* means the Director of Planning and Zoning for the Town of Jerome or theirhis or her designated representative.

25. *Temporary Lighting* means lighting which does not conform to the provisions of this Code and which will not be used for more than one thirty (30) day period within a calendar year. Temporary lighting is intended for uses which by their nature are of limited duration; e.g., holiday decorations, civic events, or construction projects.

26. *Total Outdoor Light Output* means the maximum total amount of light measured in lumens, from all outdoor light fixtures on a property. For lamp types that vary their output as they age (such as high--pressure sodium and metal halide), the initial output, as defined by the manufacturer, is the value to be considered.

27. *Translucent* means light is transmitted from the internal illumination source.

28. *Unshielded* means a fixture that allows light to be emitted above the horizontal directly from the lamp or indirectly from the fixture or a reflector.

29. *Watt* is the unit used to measure the electrical power consumption (not the light output) of a lamp.

E. GENERAL REQUIREMENTS

All light fixtures and streetlamps where able, shall be aimed or shielded so that the direct illumination shall be confined to the property boundaries of the source. Direct illumination must not fall onto or across any public or private street or road. Motion--sensing lighting fixtures shall be properly adjusted, according to the manufacturer's instructions, to turn off when detected motion ceases. All new development, qualified enhancements, and requirements as outlined in 502.1 must follow the Total Light Output requirements indicated in Section 502.1.L.Appendix A.

1. **Class 1 Lighting (High Activity Areas)**

   Lighting used for outdoor sales or eating areas, assembly or repair areas, signage, recreational facilities, and other similar applications where accurate color rendition is important to preserve the effectiveness of the activity. Commonly used in Lighting Zones 2 -4. (See Section 502.1.LAppendix A)

2. **Class 2 Lighting (Security and Public Safety)**

   Lighting used for illumination of walkways, roadways, equipment yards, parking lots, and outdoor security where general illumination for safety or security of the grounds is the primary purpose. Commonly used in Lighting Zones 1-3. (See Section 502.1.LAppendix A)

3. **Class 3 Lighting (Decorative and Accent)**

   Lighting used for decorative effects such as architectural illumination, flag and monument lighting, and illumination of landscaping elements. All Class 3 lighting shall be selected, designed, installed, and aimed so that there is a minimum amount of spill beyond the area(s) to be lighted. Commonly used in Lighting Zones 0-2. (See Section 502.1.LAppendix A)

4. **Multi-Class Lighting**

   Lighting used for more than one purpose, such that the use falls within more than one class as defined for Class 1, 2, or 3 lighting. Multi-class lighting must conform to the standards that apply to the most restrictive included class.

5. **Lighting Plan Submittal Required**

Whenever new exterior lighting is proposed, the applicant shall submit an application, and as part of the application, shall submit sufficient information to enable the ~~Planning and~~ Zoning Administrator~~Director~~ to determine whether proposed lighting complies with this Code. All applications may be subject to review and action by the Planning and Zoning Commission at the discretion of the ~~Planning and~~ Zoning Administrator~~Director~~. The lighting plan shall include information as determined by the ~~Planning and~~ Zoning Administrator~~Director~~.

6. **Plan Approval**

   If the ~~Planning and~~ Zoning Administrator~~Director~~ determines that any proposed lighting does not comply with this Code, the associated permit shall not be issued, or the application approved, unless an alternative is approved pursuant to Section 502.1(E)(7) below.

7. **Discretionary Approval of Lighting Alternatives**

   The ~~Planning and~~ Zoning Administrator~~Director~~ may approve alternative lighting designs, materials, or methods of installation or operation not specifically prescribed by this Code, provided the proposed alternative:

   a. Results in approximate equivalence to the applicable specific requirement of this Code; and

   b. Complies with the purpose of this Code as stated in subsection 502.1(B).

8. **Warm Lighting Requirements and Alternatives**

   a. All Class 2 Lighting shall be either low-pressure sodium (LPS) lamps, narrow spectrum amber LEDs, or warm lighting alternatives not to exceed 2,700 Kelvin

   b. For Class 1 Lighting, a development may be eligible for an additional 10 percent increase in the total lighting output level allowed if 50 percent or more of the Class 1 lighting complies with subsection 502.1(E)(8)(a).

9. **Prohibited Lighting Types and Fixtures**

   a. Outdoor floodlighting by floodlight projection above the horizontal plane is prohibited.

   b. Mercury vapor light bulbs and fixtures.

   c. Lamps emitting a Correlated Color Temperature (CCT) in excess of 4,000 Kelvin

   d. Searchlights, laser source lights, strobe or flashing lights, illusion lights or any similar high intensity light shall not be permitted, except in emergencies by police and fire personnel.

   e. Unshielded lights.

   f. Permanent exposed string lighting for mixed-use and nonresidential uses is prohibited, except as allowed in the subsection immediately below

   g. Ambiaence lighting for outdoor dining/bar areas, interior courtyards, and/or event venues~~,~~ may be allowed subject to compliance with all other provisions of this Code and with approval by the ~~Planning and~~ Zoning Administrator~~Director~~ on a case-by-case basis. ~~-~~In reviewing proposals for such lighting, the ~~Planning and~~ Zoning Administrator~~Director~~ shall consider lighting types, locations, and time of use. Permanent outdoor string lighting shall not flash, blink, fade, or strobe and shall be included in the total partially shielded lumen count for the property. ~~-~~Such lighting, if allowed by the ~~Planning and~~ Zoning Administrator~~Director~~, shall be extinguished immediately after outdoor hours of operation.

10. **Shielding and Light Trespass**

    a. All light fixtures are required to be fully shielded, unless approved by the Planning and Zoning Director pursuant to Section 502.1(E)(6-7).

b. Partially shielded light fixtures approved by the ~~Planning and~~ Zoning Administrator~~Director~~ as part of a lighting alternative pursuant to 502.1(E)(7) are limited to a maximum of 3,850 initial lumens per net acre and shall not exceed 1,400 initial lumens per lamp.

c. All light fixtures shall be aimed and shielded so that the direct illumination shall be confined to the property boundaries of the source. Lighting shall not be aimed onto adjacent properties, except in cases of shared parking, pursuant to 502.1(E)(7), shared pedestrian pathways, or for coordinated development sites spanning multiple parcels.

11. **Lighting Controls**

d. Motion Sensors

2) May be used where the sensor is triggered by activity within the property lines and not triggered by activity outside the property lines.

3) Motion-sensing fixtures shall be fully shielded and properly adjusted, according to the manufacturer's instructions, to turn off in a reasonable timeframe after the detected motion ceases.

e. Lighting Time Limitations

4) Except for flagpole lighting and landscape lighting, Class 1, and Class 3 lighting shall be extinguished during nonbusiness hours. Lodging businesses are encouraged to reduce lighting during off-peak hours overnight.

5) Landscape lighting shall be extinguished by close of business or 10:00p.m. whichever is later.

6) Multi-class lighting shall conform to the time limitations of the strictest class.

F. UPLIGHTING, EXTERIOR BUILDING LIGHTING AND SIGN ILLUMINATION

1. Subject to the approval of the ~~Planning and~~ Zoning Administrator~~Director~~, uplighting or ground-mounted lighting may be allowed to accent unique features of a building and/or surrounding landscaping such as exceptional architectural features, specimen trees with dense year-round foliage, or large native shrub masses, and shall be designed and installed to minimize glare with special consideration to vehicular and pedestrian traffic.
2. All lighting shall be fully shielded to contain and direct the light onto the feature to be illuminated.
3. All uplighting shall be considered partially shielded for the purposes of calculating lighting output levels.
4. All Class 3 lighting shall be selected, designed, installed, and aimed so that there is a minimum amount of spill beyond the area intended to be lighted.
5. Exterior building lighting may be considered Class 1, 2 or 3 Lighting depending on the size, function, illumination, design, and lighting intent.
6. Soffit-mounted light fixtures should be recessed into the soffit or otherwise fully shielded.
7. Architectural lighting shall only be used to highlight special features. The lighting of expansive wall planes or lighting resulting in hot spots on wall or roof planes shall be prohibited.
8. Lighting above entryways or along building perimeters shall use fully shielded fixtures.
9. Lighting used for all externally illuminated signs shall conform to all restrictions of the Code, shall be fully shielded, and shall be turned off at 10:00p.m. or when the business closes, whichever is later.
10. Outdoor internally illuminated advertising signs shall either be constructed with an opaque background and translucent letters and symbols or with a colored (not white, cream, off-white,

yellow, or other light color) translucent background with either translucent or opaque letters and symbols. Opaque means only that the material must not transmit light from the internal illumination source: the color of such opaque backgrounds is not restricted by this section. Lamps used for internal illumination of such signs shall not be included in the lumens per net acre limit set forth. All internally illuminated signs shall be turned off at 10:00 p.m. or when the business closes, whichever is later.

G. PARKING AREA AND PEDESTRIAN WALKWAY LIGHTING

Parking area and pedestrian walkway lighting is considered Class 2 lighting.

1. Parking lot lighting shall use fully shielded fixtures.
2. Parking lot poles shall not exceed 12 feet in height.
3. Low-level pedestrian walkway lighting;
   a. Considered Class 2 lighting shall utilize fully shielded fixtures;
   b. Shall use shatterproof lamp coverings;
   c. Shall not cause the site to exceed the lighting output level established in this Code;
   d. Shall not be located to present hazards for pedestrians or vehicles.
4. Post or bollard-type walkway lights shall be painted in darker colors such as black, dark brown, dark gray, or other dark earth tones.

H. OUTDOOR DISPLAY LOTS

Light for outdoor display lots shall be considered Class 1, and shall conform to the lumens per acre limits established except as follows:

1. All such lighting shall be fully shielded~~,~~ partially shielded fixtures shall be prohibited.
2. If the proposed lumens exceed the per-acre limits, the installation shall be designed to achieve no greater than the minimum illuminance levels for the activity as recommended by the ~~i~~Illuminating Engineering Society of North America and shall require approval by the Planning and Zoning Director pursuant to 502.1(E)(7).
3. Outdoor display lot illumination design shall be certified by an Arizona registered engineer as conforming to all applicable restrictions of this Code.
4. Outdoor display lot lighting shall conform to the hours of operation as established under Class 1 lighting standards pursuant to Section 502.1(E)(11)(b).

I. INSTALLATION AND MAINTENANCE

1. For all projects where the total initial output of the proposed lighting equals or exceeds 70,000 fixture lumens, or if the ~~Planning and~~ Zoning Administrator~~Director~~ determines it is necessary, certification that the lighting, as installed, conforms to the approved plans shall be provided by a certified engineer before a Certificate of Occupancy is issued. Until this certification is submitted, approval for the use of a Certificate of Occupancy shall not be issued for the project.
2. Any proposed change to the type of light source after a permit has been issued shall require submitting a change request to the ~~Planning and~~ Zoning Administrator~~Director~~ for approval prior to the substitution.

J. TEMPORARY LIGHTING PERMITS

1. The ~~Planning and~~ Zoning Administrator~~Director~~ may grant a permit for temporary lighting if he or she finds all of the following:
   a. The purpose of which the lighting is proposed is not intended to extend beyond thirty (30) days;

b. The proposed lighting is designed in such a manner as to minimize light as much as feasible;

c. The proposed lighting will comply with the general intent of this Code; and

d. The permit will be in the public interest.

2. The ~~Planning and~~ Zoning Administrator~~Director~~ shall rule on the application within five (5) ~~business~~ days from the date of submission of the request and notify the applicant in writing of their~~his or her~~ decision. The ~~Planning and~~ Zoning Administrator~~Director~~ may grant one (1) renewal of the permit for an additional thirty (30) days if they ~~he or she~~ find~~s~~ that, because of an unanticipated change in circumstances, a renewal would be in the public interest. The ~~Planning and~~ Zoning Administrator~~Director~~ is not authorized to grant more than one temporary permit and one renewal for the same property within one calendar year.

K. VARIANCES

Any person desiring to install an outdoor lighting fixture in violation of this Code may apply to the Board of Adjustment for a variance from the regulation in question. Such variances shall be allowed only as provided by Section 1065 of Jerome Zoning Ordinance.

L. TOTAL LIGHTING OUTPUT

1. Lighting Zones

a. Zone O

1) Applies to areas in which permanent lighting is not expected or, use is limited to the amount of lighting and period of operation.

2) Includes undeveloped areas, wilderness parks and preserves, astronomical observatories, or areas where a dark environment is critical.

3) Special review should be required for any permanent lighting in this zone.

b. Zone 1

1) Areas that desire low ambient lighting levels.

2) Typically single and two family residential communities, rural town centers, business parks and agricultural areas.

3) May also include developed area in parks or other natural settings.

4) Can be Class 2 or Class 3 Lighting.

c. Zone 2

1) Areas with moderate ambient lighting levels.

2) Typically multifamily residential use, institutional residential use, schools, churches, hospitals, hotels/motels, recreation facilities, and commercial or business districts with moderate nighttime activities.

3) Can be used to accommodate outdoor sales or light industry in an area other LZ-1

4) Can be Class 1, Class 2, or Class 3 Lighting.

d. Zone 3

1) Areas with moderately high lighting levels.

2) Typically include commercial corridors, high intensity suburban commercial areas, town centers, mixed use areas, industrial and shipping and rail yards with high nighttime activity.

3) Can also include High use recreational facilties and playing fields, regional shopping malls, car dealerships, gas stations, and other nighttime active retail areas.

4) Can be Class 1, Class 2, or Class 3 Lighting

e. Zone 4

1) Areas with High Ambient lighting levels

2) Should only be used for special cases and is not appropriate for most cities.

3) May be used for unusual installations such as high-density entertainment, heavy industrial use, or major manufacturing.

4) Typically, only Class 1 lighting is used in this Zone.

5) Currently, there are no known uses for this Class or Zone within the limits of the Town of Jerome.

2. Lighting Applications

Table 502.1.L.2a Residential/Agricultural Lighting Applications

Residential/Agricultural Application	LZ 0	LZ 1	LZ 2	LZ 3	LZ 4
Allowed Lumens Per SF	0.5	1.25	2.5	5.0	7.5
Allowed Base Lumens Per Site	0	3,500	7,000	14,000	21,000
Residential Max Allowed Luminaire Lumens* for Unshielded Luminaires at one entry	0	420	630	630	630
Residential Max Allowed Luminaire Lumens* for Fully Shielded Luminaire	630	1,260	1,260	1,260	1,260
Residential Max Allowed Luminaire Lumens* for Unshielded Luminaires Excluding Main Entry	0	315	315	315	315
Residential Max Allowed Luminaire Lumens* for each Shielded Directional Flood Lighting	0	0	1,260	2,100	2,100
Residential Max Allowed Luminaire Lumens* for each Low Voltage Landscape Lighting	0	315	525	525	525
Residential Max Allowed Luminaire Lumens* for each Landscape Lighting	0	0	1,050	2,100	2,100

*Luminaire Lumens equals initial Lamp Lumens for a lamp, multiplied by the number of lamps in the luminaire

Table 502.1.L.2b Commercial Lighting Applications

Commercial Application	LZ 0	LZ 1	LZ 2	LZ 3	LZ 4
Allowed Lumens Per SF	0.5	1.25	2.5	5.0	7.5
Allowed Base Lumens Per Site	0	3,500	7,000	14,000	21,000
Non-Residential Outdoor Lighting (Hardscape Area Method) Base Allowance	.5/SF of Hardscape	1.25/SF of Hardscape	2/SF of Hardscape	5/SF of Hardscape	7/SF of Hardscape
Commercial Building Entrances/Exits (Allowance is per door. Luminaires must be within 20 feet of the door)	400	1,000	2,000	4,000	6,000
Commercial Building Facades (Allowance is lumens per unit area of building façade that are illuminated. Luminaires must be aimed at the façade and capable of illuminating it without obstruction.)	0	0	8/SF	16/SF	24/SF
Canopies (Allowance is lumens per unit area for total area within drip line of canopy. To use allowance luminaires must be located under the canopy.)	0	3/SF	6/SF	12/SF	18/SF
Outdoor Dining (Allowance is lumens per unit area for the total illuminated hardscape of outdoor dining. Luminaires must be within 2 mounting heights of the hardscape	0	1/SF	5/SF	10/SF	15/SF

Table 502.1.L.2c Lumens vs Watts Comparison Chart

Actual Light Generated	Incandescent Bulbs	Fluorescent Bulbs (CFL)	LED Bulbs (Light Emitting Diode)
Lumens	Watts	Watts	Watts
250	25	4-9	3
450	40	9-13	4-5
800	60	13-15	6-8
1,100	75	18-25	9-13
1,600	100	23-30	16-20
2,000	125	28-40	20-25
2,600	150	30-55	25-28

~~*appendices a and b are located under "appendices" at the end of this zoning ordinance.*~~

Chart 502.1.L.2a Kelvin Color Temp Scale Chart

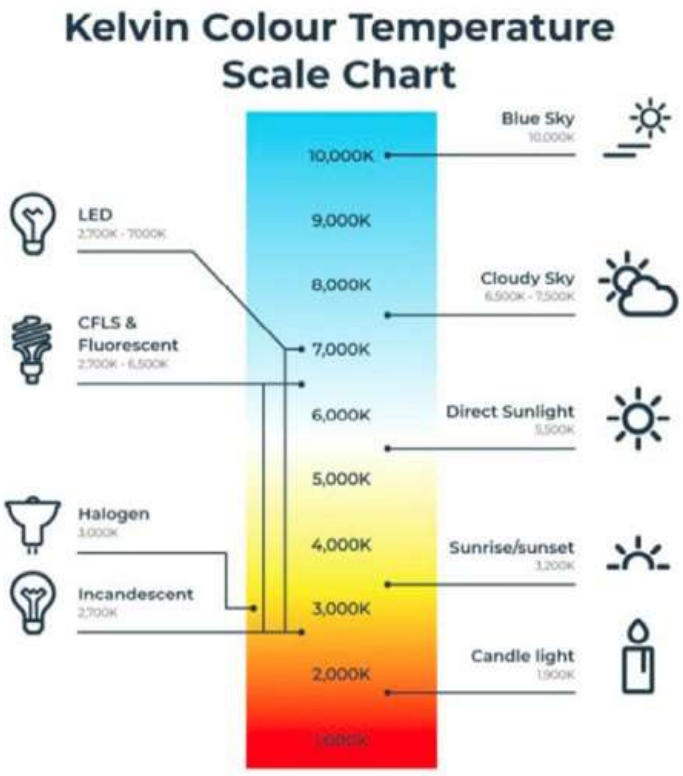

SECTION 503. "AR" ZONE, AGRICULTURAL RESIDENTIAL

[CODIFIER'S NOTE: This subsection was rewritten with Ordinance 497 and moved to new Section 403.]

~~**A. PURPOSE**~~

~~This district is intended to promote and preserve low density residential development and noncommercial farming and agriculture. Land use is composed chiefly of individual homes, together with required recreational, religious, and educational facilities.~~

~~**B. PERMITTED USES**~~

~~1. One (1) single-family dwelling or one (1) modular home per lot. Mobile homes are prohibited.~~

~~2. Customary accessory uses and buildings, provided such uses are incidental to the principal use.~~

~~3. Temporary buildings for uses incidental to construction work, which buildings shall be removed upon completion of or abandonment of the construction work.~~

~~4. Publicly owned and operated parks and recreation areas and centers.~~

~~5. Home occupations.~~

~~6. Noncommercial farming and agriculture, not including the keeping of livestock.~~

~~7. Keeping of cattle and horses owned by members of the family occupying the premises, but not to exceed one (1) head per 20,300 square feet of lot area.~~

~~**C. CONDITIONAL USES**~~

~~1. Animals, fowl, and other typical farm livestock, except as otherwise prohibited herein.~~

~~2. Commercial stables~~

~~3. Churches or similar places of worship~~

~~4. Schools: Public or private elementary and high.~~

~~5. Colleges, universities, and professional schools having a regular curriculum.~~

~~6. Nursery Schools and Day Care Centers.~~

~~7. Privately owned and operated recreation areas and centers.~~

~~8. Public buildings other than hospitals.~~

~~9. Public utility buildings, structures, or appurtenances thereto for public service use.~~

~~10. Model Homes~~

~~11. Bed and Breakfast~~

~~12. Viniculture use, pursuant to Chapter 16, "Vineyards," of the Jerome Town Code.~~

~~13. Beekeeping~~

~~[Ord. No. 380; Ord. No. 474]~~

~~**D. ZONE RESTRICTIONS**~~

~~1. Cattle, horses, sheep, goats, dogs, cats, birds, fowl, and any other living animals, and the pens, stalls, stables, yards, shelters, cages, areas, places, and premises where they are held or kept, shall be so maintained that flies, insects, or vermin, rodent harborage, odors, ponded water, the accumulation of manure, garbage, refuse or other noxious material do not become a public health nuisance and do not disturb the peace, comfort, or health of any person.~~

~~2. Any person, firm, or corporation is prohibited from keeping or sheltering any animal, bird, or fowl other than a household pet within one hundred (100) feet of a building, other than his own, used for human habitation.~~

3. Pigs shall not be kept within the city limits.

E. PROPERTY DEVELOPMENT STANDARDS

1. MINIMUM LOT AREA: Ten thousand (10,000) square feet.

2. MINIMUM LOT WIDTH: One hundred (100) feet

3. MINIMUM SQUARE FOOTAGE OF DWELLING: Eight hundred and fifty (850) square feet of enclosed floor space exclusive of any attached garage.

4. MAXIMUM LOT COVERAGE: Not more than forty (40) percent of the net area of the lot may be covered by the main building and all accessory buildings.

5. YARDS:

a. Front Yard

1) There shall be a front yard not less than twenty (20) feet in depth.

2) Where lots have a double frontage on two (2) streets, the required front yard of twenty (20) feet shall be provided on both streets.

b. Side Yard

1) There shall be a side yard along interior lot lines of not less than ten (10) feet in width.

2) Where a side lot line abuts a street, there shall be a side yard of not less than twenty (20) feet in width.

c. Rear Yard

1) There shall be a rear yard of not less than twenty (20) feet in depth, except where the rear lot line is in common with or separated by an alley from the side lot line of another lot, there shall be a rear yard of not less than ten (10) feet in depth.

2) Where the rear lot line abuts an alley, the required rear yard shall be measured from the center line of the alley.

6. MAXIMUM BUILDING HEIGHT: No building shall exceed the height of twenty five (25) feet as defined in "building, height of". On slopes over forty-five percent (45%) there will be a one (1) foot reduction in height for each additional five percent (5%) of slope or portion thereof. Notwithstanding these provisions, no face of any building shall exceed thirty-five (35) feet above the low point of original grade as defined in "original grade". (see Appendix for diagrams).

7. ACCESSORY BUILDINGS

e. Accessory buildings shall be considered in determining yard, lot and area requirements.

f. Accessory buildings shall not be used for human habitation.

g. Detached accessory buildings shall meet all required setbacks and maintain a space of five (5) feet from the main building or other structures.

h. Detached accessory buildings shall be constructed to a height not greater than fourteen (14) feet to the peak or highest point of the roof, as defined in "Accessory Building, Height of."

[Ord. No. 446]

F. GENERAL PROVISIONS

The provisions of Section 502 shall apply.

G. SIGNS

The provisions of Section 509 shall apply.

H. PARKING AND LOADING

The provisions of Section 510 shall apply.

I. PLAN REVIEW

The provisions of Section 303 shall apply.

~~**J. DESIGN REVIEW**~~

~~The provisions of Section 304 shall apply to all property, buildings and structures within the Historic Overlay District.~~

SECTION 504. "R1-10" ZONE, SINGLE FAMILY RESIDENTIAL

[CODIFIER'S NOTE: This subsection was rewritten with Ordinance 497 and moved to new Section 404.]

~~**A. PURPOSE**~~

~~This district is intended to promote and preserve low density residential development. Regulations and property development standards are designed to protect the single-family residential character of the district and to prohibit all incompatible activities. Land use is composed chiefly of individual homes, together with required recreational, religious and educational facilities.~~

~~**B. PERMITTED USES**~~

~~1. One (1) single-family dwelling or one (1) modular home per lot. Mobile homes are prohibited.~~

~~2. Customary accessory uses and buildings provided such uses are incidental to the principal use.~~

~~3. Temporary buildings for uses incidental to construction work, which buildings shall be removed upon completion of or abandonment of the construction work.~~

~~4. Publicly owned and operated parks and recreation areas and centers.~~

~~5. Home Occupations.~~

~~**C. CONDITIONAL USES**~~

~~1. Churches or similar places of worship.~~

~~2. Schools: Public or private elementary and high.~~

~~3. Colleges, universities, and professional schools having a regular curriculum.~~

~~4. Nursery Schools and Day Care Centers.~~

~~5. Public buildings other than hospitals.~~

~~6. Public utility buildings, structures, or appurtenances thereto for public service use.~~

~~7. Libraries.~~

~~8. Model Homes.~~

~~9. Bed and Breakfast~~

~~10. Beekeeping~~

~~[Ord. No. 474]~~

~~**D. PROPERTY DEVELOPMENT STANDARDS**~~

~~1. MINIMUM LOT AREA: Ten thousand (10,000) square feet~~

~~2. MINIMUM LOT WIDTH: One hundred (100) feet~~

~~3. MINIMUM SQUARE FOOTAGE OF DWELLING: Eight hundred and fifty (850) square feet of enclosed floor space exclusive of any attached garage.~~

~~4. MAXIMUM LOT COVERAGE: Not more than forty (40) percent of the net area of the lot may be covered by the main building and all accessory buildings.~~

~~5. Yards:~~

~~a. Front Yard:~~

~~1) There shall be a front yard of not less than twenty (20) feet in depth.~~

~~2) Where lots have a double frontage on two (2) streets, the required front yard of twenty (20) feet shall be provided on both streets.~~

~~b. Side Yard:~~

3) There shall be a side yard along interior lot lines of not less than ten (10) feet in width.

4) Where a side lot line abuts a street, there shall be a side yard of not less than twenty (20) feet in width

c. Rear Yard:

5) There shall be a rear yard of not less than twenty (20) feet in depth, except where the rear lot line is in common with or separated by an alley from the side lot line of another lot, there shall be a rear yard of not less than ten (10) feet in depth.

6) Where the rear lot line abuts an alley, the required rear yard shall be measured from the center line of the alley.

6. MAXIMUM BUILDING HEIGHT: No building shall exceed the height of twenty five (25) feet as defined in "building, height of." On slopes over forty five (45) percent there will be a one (1) foot reduction in height for each additional five (5) percent of slope or portion thereof. Notwithstanding these provisions, no face of any building shall exceed thirty five (35) feet above the low point of original grade as defined in "original grade." (see Appendix for diagrams).

7. ACCESSORY BUILDINGS

a. Accessory buildings shall be considered in determining yard, lot, and area requirements.

b. Accessory buildings shall not be used for human habitation.

c. Detached accessory buildings shall meet all required setbacks and maintain a space of five (5) feet from the main building or other structures.

d. Detached accessory buildings shall be constructed to a height not greater than fourteen (14) feet to the peak or highest point of the roof, as defined in "Accessory Building, Height of."

[Ord. No. 446]

E. GENERAL PROVISIONS

The provisions of Section 502 shall apply.

F. SIGNS

The provisions of Section 509 shall apply.

G. PARKING AND LOADING

The provisions of Section 510 shall apply.

H. PLAN REVIEW

The provisions of Section 303 shall apply.

I. DESIGN REVIEW

The provisions of Section 304 shall apply to all property, buildings, and structures within the Historic Overlay District.

SECTION 505. "R1-5" ZONE, SINGLE FAMILY RESIDENTIAL

[CODIFIER'S NOTE: This subsection was rewritten with Ordinance 497 and moved to new Section 405.]

~~**A. PURPOSE**~~

~~This district is intended to fulfill the need for medium density single family residential development. Regulations and property development standards are designed to protect the single family residential character of the district and to prohibit all incompatible activities. Land use is composed chiefly of individual homes, together with required recreational, religious, and educational facilities.~~

~~**B. PERMITTED USES**~~

~~1. One (1) single-family dwelling or one (1) modular home per lot. Mobile homes are prohibited.~~

~~2. Customary accessory uses and buildings, provided such uses are incidental to the principal use.~~

~~3. Temporary buildings for uses incidental to construction work, which buildings shall be removed upon completion of or abandonment of the construction work.~~

~~4. Publicly owned and operated parks and recreation areas and centers.~~

~~5. Home occupations.~~

~~**C. CONDITIONAL USES**~~

~~1. Churches or similar places of worship.~~

~~2. Schools: Public or private elementary and high.~~

~~3. Colleges, universities, and professional schools having a regular curriculum.~~

~~4. Nursery Schools and Day Care Centers.~~

~~5. Public buildings.~~

~~6. Public utility buildings, structures, or appurtenances thereto for public service use.~~

~~7. Libraries.~~

~~8. Model homes~~

~~9. Bed and Breakfast~~

~~10. Beekeeping~~

~~[Ord. No. 474]~~

~~**D. PROPERTY DEVELOPMENT STANDARDS**~~

~~1. MINIMUM LOT AREA: Five thousand (5,000) square feet.~~

~~2. MINIMUM LOT WIDTH: Fifty (50) feet.~~

~~3. MINIMUM SQUARE FOOTAGE OF DWELLING: Eight hundred and fifty (850) square feet of enclosed floor space exclusive of any attached garage.~~

~~4. MAXIMUM LOT COVERAGE: Not more than sixty (60) percent of the net area of the lot may be covered by the main building and all accessory buildings.~~

~~5. Yards:~~

~~a. Front Yard:~~

~~7) There shall be a front yard of not less than ten (10) feet in depth except when the following conditions prevail:~~

8) A front yard is required equal to that established by any building within one hundred (100) feet on either or both sides of the lot. Where more than one (1) such building is within one hundred (100) feet of the lot then the front yard of the nearest such building shall be the required front yard of the lot, except that where the lot is between two such buildings, each within one hundred (100) feet of a lot, then the front yard of this lot shall be that established by a line joining the nearest front corner of the other such building. Nothing in the above shall require that a front yard in this district exceed twenty (20) feet.

9) Where lots have a double frontage on two (2) streets, the required front yard shall be provided on both streets.

b. Side Yard:

10) There shall be a side yard along interior lot lines of not less than five (5) feet in width.

11) Where a side lot line abuts a street, the side yard shall be considered a front yard for the purpose of determining width.

c. Rear Yard:

12) There shall be a rear yard of not less than twenty (20) feet in depth. Except where the rear lot line is in common with or separated by an alley from the side lot line of another lot, there shall be a rear yard of not less than ten (10) feet in depth.

13) Where the rear lot line abuts an alley, the required rear yard shall be measured from the center line of the alley.

6. MAXIMUM BUILDING HEIGHT: No building shall exceed the height of twenty five (25) feet as defined in "building, height of." On slopes over forty-five (45) percent there will be a one (1) foot reduction in height for each additional five (5) percent of slope or portion thereof. Notwithstanding these provisions, no face of any building shall exceed thirty-five (35) feet above the low point of original grade as defined in "original grade". (see Appendix for diagrams).

7. ACCESSORY BUILDINGS

a. Accessory buildings shall be considered in determining yard, lot and area requirements.

b. Accessory buildings shall not be used for human habitation.

c. Detached accessory buildings shall meet all required setbacks and maintain a space of five (5) feet from the main building or other structures.

d. Detached accessory buildings shall be constructed to a height not greater than fourteen (14) feet to the peak or highest point of the roof, as defined in "Accessory Building, Height of."

[Ord. No. 446]

E. GENERAL PROVISIONS

The provisions of Section 502 shall apply.

F. SIGNS

The provisions of Section 509 shall apply.

G. PARKING AND LOADING

The provisions of Section 510 shall apply.

H. PLAN REVIEW

The provisions of Section 303 shall apply.

I. DESIGN REVIEW

The provisions of Section 304 shall apply to all property, buildings and structures within the Historic Overlay District.

SECTION 506. "R-2" ZONE, SINGLE- AND TWO-FAMILY RESIDENTIAL

[CODIFIER'S NOTE: This subsection was rewritten with Ordinance 497 and moved to new Section 406.]

~~**A. PURPOSE**~~

~~This district is intended to fulfill the need for medium density residential development regulations and property development standards are designed to allow maximum flexibility and variety in residential development while prohibiting all incompatible activities. Land use is composed chiefly of single- and two-family homes, together with required recreational, religious, and educational facilities.~~

~~**B. PERMITTED USES**~~

~~1. One (1) single-family dwelling or one (1) two-family dwelling or one (1) modular home per lot. Mobile homes are prohibited.~~

~~2. Customary accessory uses and buildings, provided such uses are incidental to the principal use.~~

~~3. Temporary buildings for uses incidental to construction work, which buildings shall be removed upon completion of or abandonment of the construction work.~~

~~4. Publicly owned and operated parks and recreation areas and centers.~~

~~5. Home occupations.~~

~~**C. CONDITIONAL USES**~~

~~Any conditional use in the R1-5 zone.~~

~~**D. PROPERTY DEVELOPMENT STANDARDS**~~

~~1. MINIMUM LOT AREA: Five thousand (5,000) square feet.~~

~~2. MINIMUM LOT WIDTH: Fifty (50) feet.~~

~~3. MINIMUM SQUARE FOOTAGE OF DWELLING: Eight hundred and fifty (850) square feet of enclosed floor space exclusive of any attached garage.~~

~~4. MAXIMUM LOT COVERAGE: Not more than sixty (60) percent of the net area of the lot may be covered by the main building and all accessory buildings.~~

~~5. Yards:~~

~~d. a. Front Yard:~~

~~e. 1) There shall be a front yard of not less than ten (10) feet in depth except when the following conditions prevail:~~

~~f. A front yard is required equal to that established by any building within one hundred (100) feet on either or both sides of the lot. Where more than one such building is within one hundred (100) feet of the lot then the front yard of the nearest such building shall be the required front yard of the lot, except that where the lot is between two such buildings, each within one hundred (100) feet of a lot, then the front yard of this lot shall be that established by a line joining the nearest front corner of the other such building. Nothing in the above shall require that a front yard in this district exceed twenty (20) feet.~~

~~g. 2) Where lots have a double frontage on two (2) streets, the required front yard shall be provided on both streets.~~

~~h. b. Side Yard:~~

~~i. 1) There shall be a side yard along interior lot lines of not less than five (5) feet in width.~~

j. 2) Where a side lot line abuts a street, the side yard shall be considered a front yard for the purpose of determining width.

k. e. Rear Yard:

l. 1) There shall be a rear yard of not less than twenty (20) feet in depth. Except where the rear lot line is in common with or separated by an alley from the side lot line of another lot, there shall be a rear yard of not less than ten (10) feet in depth.

m. 2) Where the rear lot line abuts an alley, the required rear yard shall be measured from the center line of the alley.

6. MAXIMUM BUILDING HEIGHT: No building shall exceed the height of twenty five (25) feet as defined in "building, height of." On slopes over forty-five (45) percent there will be a one (1) foot reduction in height for each additional five (5) percent of slope or portion thereof. Notwithstanding these provisions, no face of any building shall exceed thirty-five (35) feet above the low point of original grade as defined in "original grade". (see Appendix for diagrams).

7. ACCESSORY BUILDINGS

a. Accessory buildings shall be considered in determining yard, lot and area requirements.

b. Accessory buildings shall not be used for human habitation.

c. Detached accessory buildings shall meet all required setbacks and maintain a space of five (5) feet from the main building or other structures.

d. Detached accessory buildings shall be constructed to a height not greater than fourteen (14) feet to the peak or highest point of the roof, as defined in "Accessory Building, Height of."

[Ord. No. 446; Ord. No. 454]

E. GENERAL PROVISIONS

The provisions of Section 502 shall apply.

F. SIGNS

The provisions of Section 509 shall apply.

G. PARKING AND LOADING

The provisions of Section 510 shall apply.

H. PLAN REVIEW

The provisions of Section 303 shall apply.

I. DESIGN REVIEW

The provisions of Section 304 shall apply to all property, buildings and structures within the Historic Overlay District.

SECTION 507. "C–1" ZONE, GENERAL COMMERCIAL

[CODIFIER'S NOTE: This subsection was rewritten with Ordinance 497 and moved to new Section 407.]

~~**A. PURPOSE**~~

~~This district is intended to provide for and encourage orderly development in existing and future commercial areas within the Town.~~

~~**B. PERMITTED USES**~~

~~1. Retail sales of apparel and accessories, dry goods, foods, drugs, flowers and plants, garden supplies, hardware, gifts and novelties, pet and hobby supplies, art and art supplies, jewelry, liquor, tobacco, newspapers and magazines, music and records, household supplies, stationary, books, paint, wallpaper and glass, sporting goods, toys, variety store goods, appliances, auto parts and supplies, furniture, office supplies, leather and leather products, carpet, antiques, fabrics, photo supplies, second hand and used goods and similar convenience goods.~~

~~2. Repair services such as, but no more objectionable or intensive in character than, watches, jewelry, shoes, locksmith, minor household appliances.~~

~~3. Personal services such as: barbers, beauty shops, health clubs, laundries and cleaners, mortuaries.~~

~~4. Hotels.~~

~~5. Establishments serving food or beverages inside a building such as: restaurants, cafes, coffee shops, bars, taverns, cocktail lounges, excluding entertainment and dancing in connection therewith.~~

~~6. Manufacturing incidental to a permitted use is permitted, but subject to the following limitations:~~

~~a. All products incidental to a permitted use which are manufactured or processed on the premises shall be sold at retail only and on the premises only.~~

~~b. Such manufacturing activity shall be restricted to not over fifty (50) percent of the ground floor area of the building allocated to the permitted use.~~

~~7. Pawn shops.~~

~~8. Printers and print shops.~~

~~9. Radio and TV studios provided that no masts, towers, or antenna used for transmission or broadcasting purposes are erected on the premises.~~

~~10. Banks, stock brokerage firms, savings and loan associations, loan companies, and credit unions.~~

~~11. Governmental services, public utility offices and exchanges, excluding storage or repair services.~~

~~12. Offices related to any of the following occupations: executive, administrative, professional, accounting, banking, writing, clerical, stenographic, graphic art, real estate, and sales.~~

~~13. Medical and dental offices and clinics.~~

~~14. Establishments primarily supplemental in character to other permitted principal uses, such as: pharmacy, apothecary shop, sales of corrective garments, prosthetic devices, and optical goods, and medical and dental laboratories.~~

~~15. Establishments whose principal function is basic research, design, and pilot or experimental product development, when conducted within an a completely enclosed building.~~

~~16. Business and trade schools, dancing, art, and music schools and studios.~~

~~17. Headquarters buildings of charitable, philanthropic, and welfare organizations, provided that their primary activities are administrative and clerical rather than residential in nature.~~

18. Accessory buildings, structures and other uses customarily incidental to a permitted use except as otherwise provided in this Ordinance.

19. Any other such uses as determined by the Planning and Zoning Commission and approved by the Town Council to be similar to those uses listed above and not detrimental to the public health, safety and general welfare in accordance with the provisions of this Ordinance.

[Ord. No. 293; Ord. No. 465]

C. CONDITIONAL USES

1. Any "Permitted" or "Conditional" Uses in the "R1-10", "R1-5" or "R-2" Zones.

2. Establishments serving food or beverages for consumption on the premises, but outside of an enclosed building.

3. Establishments serving food or beverages which include entertainment or dancing.

4. Temporary outdoor sales, displays and other outdoor activities.

5. Indoor commercial recreation establishments, such as bowling alleys, billiard parlors, skating rinks and similar establishments.

6. Outdoor commercial recreation establishments.

7. Indoor theaters, assembly halls, ballrooms and similar places of assembly.

8. Taxi stands, bus stops, parking lots and garages.

9. Gas service stations.

10. Outdoor sales of nursery stock.

11. Pet shops.

12. Any such other uses as determined by the Planning and Zoning Commission and approved by the Town Council to be similar to those uses listed above and not detrimental to the public health, safety and general welfare in accordance with the provisions of this Ordinance.

13. Residential use of a building, including apartment houses, when in the opinion of the Planning and Zoning Commission, said use has little or no adverse effect on the public health, safety and general welfare. Residential use with historic precedence in the subject buildings are exempt from the well-being criteria but remain subject to nonconforming use clauses.

14. Hospitals, nursing homes and convalescent homes.

15. Spirituous Liquor Tasting Facilities.

[Ord. No. 293; Ord. No. 408; Ord. No. 454; Ord. No. 465]

D. ZONE RESTRICTIONS

1. All activities, except as otherwise addressed herein, shall be conducted entirely within enclosed buildings.

2. Outdoor storage or display of goods or materials shall be prohibited.

3. Warehousing or indoor storage of goods or materials, exceeding that normally incidental to permitted uses, shall be prohibited.

[Ord. No. 293]

E. PROPERTY DEVELOPMENT STANDARDS

1. MINIMUM LOT AREA: None, provided all other provisions of the ordinance are met.

2. MINIMUM LOT WIDTH: None, provided all other provisions of the ordinance are met.

3. MINIMUM SQUARE FOOTAGE OF MAIN BUILDING: None, provided all other provisions of the Ordinance are met.

4. MAXIMUM LOT COVERAGE: None provided all other provisions of the ordinance are met.

5. YARDS:

a. Front Yard:

1) There shall be a front yard of not less than ten (10) feet in depth except when the following conditions prevail:

The front yard is required equal to that established by any commercial building within one hundred (100) feet on either or both sides of the lot. Where more than one such building is within one hundred (100) feet of the lot then the front yard of the nearest such building shall be the required front yard of the lot, except that where the lot is between two (2) such buildings, each within one hundred (100) feet of a lot, then the front yard of this lot shall be that established by a line joining the nearest front corner of the other such building. Nothing in the above shall require that a front yard in this district exceed twenty (20) feet.

Where lots have a double frontage on two (2) streets, the required front yard shall be provided on both streets.

b. Side Yard:

1) Where the side lot line is in common with the side lot line of a property in a commercial or industrial zone, no side yard shall be required on that side.

2) Where a side lot line abuts a street, the side yard shall be considered a front yard for the purpose of determining width.

3) Where the side lot line is in common with the side lot line of a property in a residential zone, the side yard requirements of the residential zone shall apply to that side yard, provided nothing shall require such a side yard to be greater than ten (10) feet in width.

c. Rear Yard:

1) There shall be a rear yard of not less than twenty (20) feet in depth, except where the rear lot line is in common with or separated by an alley from the side lot line of a lot in a commercial or industrial zone, there shall be a rear yard of not less than ten (10) feet in depth.

2) Where the rear lot line abuts an alley, the required rear yard shall be measured from the centerline of the alley.

6. MAXIMUM BUILDING HEIGHT: The maximum building height shall not exceed the height of twenty-five (25) feet except when the following conditions prevail:

a. The maximum building height shall not exceed that established by any building within one hundred (100) feet on either or both sides of the lot. Where more than one such building is within one hundred (100) feet of the lot, then the maximum building height of the nearest such building shall be the maximum building height of the lot. Except that where the lot is between two (2) such buildings, each within one hundred (100) feet of the lot, then the maximum building height of the center of this lot shall be that established by a line joining the highest point of the other such buildings. Nothing in the above shall require that the maximum building height in this district be less than twenty-five (25) feet. (see Appendix for diagrams).

b. Notwithstanding these provisions, no face of any building shall exceed thirty-five (35) feet above the low point of original grade as defined in "original grade."

7. ACCESSORY BUILDINGS

a. Accessory buildings shall be considered in determining yard, lot, and area requirements.

b. Accessory buildings shall not be used for human habitation.

c. Detached accessory buildings shall meet all required setbacks and maintain a space of five (5) feet from the main building or other structures.

d. Detached accessory buildings shall be constructed to a height not greater than fourteen (14) feet to the peak or highest point of the roof, as defined in "Accessory Building, Height of."

[Ord. No. 446]

F. GENERAL PROVISIONS

The provisions of Section 502 shall apply.

G. SIGNS

The provisions of Section 509 shall apply.

H. PARKING AND LOADING

The provisions of Section 510 shall apply.

I. PLAN REVIEW

The provisions of Section 303 shall apply.

J. DESIGN REVIEW

The provisions of Section 304 shall apply to all property, buildings, and structures within the Historic Overlay District.

SECTION 508. "I-1" ZONE, LIGHT INDUSTRIAL

[CODIFIER'S NOTE: This subsection was rewritten with Ordinance 497 and moved to new Section 408.]

~~**A. PURPOSE**~~

~~This district is intended to provide for commercial, industrial, and manufacturing activities, while ensuring that these activities will in no manner affect in a detrimental way any of the surrounding districts.~~

~~**B. PERMITTED USES**~~

~~Any permitted use in the C-1 Zone.~~

~~**C. CONDITIONAL USES**~~

~~1. Any conditional use in the C-1 Zone.~~

~~2. Light industries such as, but no more objectionable or intensive in character than: jewelry, clothing, and furniture manufacturers.~~

~~3. Warehouses.~~

~~4. Wholesale establishments.~~

~~5. Automobile repair garages.~~

~~6. Accessory buildings, structures, and uses customarily incidental to a permitted use except as otherwise provided in this ordinance.~~

~~7. Any such other uses as determined by the Planning and Zoning Commission and approved by the City Council to be similar to those uses listed above and not detrimental to the public health, safety, and general welfare in accordance with the provisions of this Ordinance.~~

~~**D. ZONE RESTRICTIONS**~~

~~Same as C-1 Zone.~~

~~**E. PROPERTY DEVELOPMENT STANDARDS**~~

~~Same as C-1 Zone.~~

~~**F. PERFORMANCE STANDARDS**~~

~~Any permitted or conditional use in the I-1 zone must conform to the following performance standards. In conjunction with the plan review process, the developer-applicant shall provide to both the Zoning Administrator and the Planning and Zoning Commission data which are sufficient to show that the proposed use and the manner of its conduct will meet these performance standards.~~

~~1. NOISE: At no point on the property line shall the sound pressure level of any individual operation exceed the decibel levels in the designated octave bands shown below. (Excluding operation of motor vehicles or other transportation facilities.)~~

Octave band cycles per second	**Maximum sound pressure** level in decibels .0002 dynes per CM^2
0—75	72
75—150	67
150—300	59
300—600	52
600—1200	46
1200—2400	40
2400—4800	34
Above 4800	32

Sound levels shall be measured with a sound level meter and associated octave band filter manufactured according to standards prescribed by the American Standards Association. Measurements shall be made using the flat network of the sound level meter.

Impulsive type noises shall be subject to the performance standards provided that such noises shall be capable of being accurately measured with such equipment. Noise capable of being so measured, for the purpose of this section, shall be those noises which cause rapid fluctuations of the needle of the sound level meter with a variation of not more than plus or minus two (2) decibels. Noises incapable of being so measured, such as those of an irregular or intermittent nature, shall be controlled so as not to become a nuisance to adjacent uses.

2. SMOKE: No emission of smoke from any source shall be permitted to exceed a greater density than that density described as No. 1 on the Ringleman Chart. However, smoke may be emitted, which is equal to but not darker than No. 2 on the Ringleman Chart, for not more than four (4) minutes in any thirty (30) minute period. For the purpose of grading the density of smoke, the Ringleman Chart, as published by the U.S. Bureau of Mines shall be the standard.

3. GLARE OR HEAT: Any activity producing intense glare or heat shall be performed within a completely enclosed building in such a manner as not to create a nuisance or hazard along lot lines.

4. VIBRATION: No vibration shall be permitted which is discernible beyond the lot line to the human sense of feeling for three (3) minutes or more duration in any one (1) hour of the day between the hours of 7:00 a.m. to 7:00 p.m., or of thirty (30) seconds or more duration in any one (1) hour during the hours of 7:00 p.m. and 7:00 a.m.

5. FLY ASH, DUST, FUMES, VAPORS, GASES AND OTHER FORMS OF AIR POLLUTION: No emission shall be permitted which can cause damage to health, to animals, or vegetation, or other forms of property, or which can cause any excessive soiling.

6. LIQUIDS AND SOLID WASTE: No wastes shall be discharged in the public sewage system which endangers the normal operation of the public sewage system.

7. ODORS: No emission of odorous gases or other odorous matter shall be permitted in such quantities as to be offensive in such a manner as to create a nuisance or hazard beyond the property lines.

G. GENERAL PROVISIONS

The provisions of Section 502 shall apply.

H. SIGNS

The provisions of Section 509 shall apply.

I. PARKING AND LOADING

The provisions of Section 510 shall apply.

~~**J. PLAN REVIEW:**~~

~~The provisions of Section 303 shall apply.~~

~~**K. DESIGN REVIEW**~~

~~The provisions of Section 304 shall apply to all property, buildings, and structures within the Historic Overlay District.~~

SECTION 509. SIGNS

A. PURPOSE

This section provides a set of standards for the design and construction of signs within the Town of Jerome. The purpose of this section is to encourage the preservation of historic buildings and artifacts, to protect the general public from damage and injury, to protect property values, to preserve the beauty and unique character of Jerome, to aid in the free flow of traffic within the town, and to promote the tourist industry, which is important to the economy of Jerome, and the Historic Overlay District.

B. APPLICATION

The provisions of this section are applicable to all zone districts of this Ordinance.

C. DEFINITIONS

Within and for the purposes of this section, the following definitions, and only these definitions, apply.

1. Area – Sign area is calculated as the area within a continuous perimeter that encloses the limits of text and graphics of a sign, together with any frame or other material or color forming an integral part of the display or used to differentiate the sign's message from the background against which it is placed. The area excludes the structure upon which the sign is placed and sign supports.
2. Barber pole – a type of sign used by barbers to signify the place or shop where they perform their craft. The sign includes a staff or pole with a helix of colored stripes (usually red, white, and blue). The pole may be stationary or may rotate, often with the aid of an electric motor.
3. Billboard – Any free-standing sign exceeding fifty (50) square feet in surface area on any one face.
4. Clear vision triangle – A triangle-shaped zone formed by the existing or proposed curb lines of two or more intersecting streets, roads, or alleys and a third line connecting said curb lines at a distance of thirty (30) feet in each direction from the point of the curb line intersection, in order to provide vehicular traffic an unobstructed view of cross traffic at intersections. In locations without curbs, the edge of the drivable surface of the street or road shall be treated the same as a curb.
5. Flying banner – a flexible or rigid pole attached to one side of a flexible fabric, generally in the shape of a feather, used for the primary purpose of advertising or attention getting by the public display of visually communicative images. Such banners are also known and sold under names that include, but are not limited to, "quill sign," "wing banner," "banana banner," "blade banner," "flutter banner," "flutter flag," "bowflag," "teardrop banner," and others. The definition includes functionally similar display devices.
6. Mannequin/skeleton/statue – a styled and three-dimensional representation of the human form.
7. Mural – See definition for *Sign, Painted*.
8. Organization – An organized body of people with a particular non-profit or for-profit purpose, such as a society, association, civic or charitable group.
9. Sign – An object meant to convey a message through the use of words or symbols. A sign can be painted on one or multiple surfaces, be freestanding, supported by a pole or attached to a building. All exterior signs, whether public or private, are regulated by this ordinance.
10. Sign, A-frame – A temporary, movable, freestanding sign placed on but not permanently anchored in the ground. This definition includes T-frame signs and other similar temporary signs. A-frame signs are typically constructed of wood, cardboard, plastic, or other lightweight and rigid material, and are often referred to as sandwich boards.

11. ~~Sign, Balloon – any sign painted onto or otherwise attached to or suspended from a balloon, whether anchored or affixed to any portion of the premises or tethered to and floating above any portion of the premises.~~ Sign, Aerial – A balloon or other airborne flotation device which is tethered to the ground or to a building or other structure that directs attention to a business, commodity, service, or entertainment conducted, sold, or offered.

12. Sign, Animated or Moving – Any sign or part of a sign which changes physical position or light intensity by any movement or rotation or that gives the appearance of such movement or rotation.

13. Sign, Awning – A sign that is mounted, painted, or otherwise applied on or attached to an awning or other fabric, plastic, or structural protective cover over a door, entrance, or window of a building. A marquee or a canopy is not an awning.

14. Sign, Back-lit – An indirect source of light which illuminates a sign by shining through a translucent surface of a sign, including plastic signs, lit from an internal light source.

~~11.~~15. Sign, Banner – A sign of lightweight fabric or similar nonridged material that is mounted with no enclosing framework.

~~12.~~16. ~~Sign, Banner – A sign made of fabric or similar material with no enclosing framework that is mounted to a building or structure (Does not include a flying banner).~~ Sign, Bench – A bench or similar device containing either off-premise or on-premise advertising.

~~13.~~17. ~~Sign, Canopy – A sign mounted or painted on a canopy or awning.~~Sign, Canopy – A sign that is mounted, painted, or otherwise applied on or attached to a freestanding canopy or structural protective cover over an outdoor service area. An awning or a marquee is not a canopy.

18. Sign, Changeable-Copy – A sign, or portion thereof, with characters, letters, or illustrations that can be changed or rearranged manually without altering the face or surface of the sign. Examples include whiteboards, chalkboards, and menu boards.

19. Sign, Commemorative – A sign, tablet, or plaque commemorating or memorializing a person, event, structure, or site.

20. Sign, Construction -A temporary sign providing information about future development or current construction on a site and the parties involved in the project.

~~14.~~21. Sign, Direct Illumination – A sign whose light source is either located in the interior of the sign so that the rays go through the face of the sign, or which is attached to the face of the sign and is perceived as a design element of the sign.

22. ~~Sign, Directional – An exterior sign that indicates whether a business is open or closed or directs people to a particular entrance of a building.~~ Sign, Directional – Signs limited to providing directions necessary or convenient for visitors or clients coming onto a premises including signs marking entrances and exits, parking areas, loading zones, or circulation direction.

23. Sign, Directory – A sign, other than an identification sign, listing the names, uses, or locations of the various businesses or activities conducted within a building or group of buildings, that is centrally located and intended to provide on-site directions.

24. Sign, Electronic Message Board – Signs whose alphabetic, pictographic, or symbolic informational content can be changed or altered on a fixed display screen composed of electrically illuminated segments.

~~15.~~25. Sign, Fascia – A single-faced sign attached flush to a building.

~~16.~~26. Sign, Freestanding – A sign not attached to or supported by a building.

~~17.~~27. Sign, Gas-generated – Gas-generated signs or signs illuminated by gas-generated lighting.

28. Sign, Height – The vertical distance from the ground directly under the sign to the highest point of the sign.

29. Sign, Holiday Decoration – Temporary seasonal signs, in the nature of decorations, clearly incidental to and customarily associated with nationally recognized holidays and which contain no advertising message.

30. Sign, Home Occupation – A sign listing only the name or occupation of a permitted home occupation.

~~18.~~31. Sign, Indirect Illumination – Illumination of a sign that is effected by a source of light not contained within the sign itself.

32. Sign, Interior – Signs within a building not visible from outside. Interior signs are not regulated by this ordinance.

33. Sign, Marquee – A roof-like structure of a permanent nature that projects from the wall of a building or its supports and may overhang the public way.

34. Sign, Monument – A freestanding sign supported primarily by an internal structural framework or integrated into landscaping or other solid structural features other than support poles.

~~19.~~35. Sign, Multitenant – An identification sign for a commercial site with multiple tenants, displaying the names of each tenant on the site.

~~20.~~36. Sign, Nameplate - A sign typically used to identify the business or residents of the premises, not exceeding 2 by 12 inches (2" x 12").

~~21.~~37. Sign, Off-premise – A permanent or temporary sign not located on the premises of the business that it advertises.

~~22.~~38. Sign, On-premise – A permanent or temporary sign located on the premises of the business that it advertises, referring exclusively to the name, location, products, persons, accommodations, services, or activities of or on those premises, or the sale or lease of those premises.

~~23.~~39. Sign, Open/Closed – An exterior sign that indicates whether a business is open or closed.~~See definition of *Sign, Directional.*~~

~~24.~~40. Sign, Painted – A sign painted directly on the building façade.

~~25.~~41. Sign, Permanent – A sign permanently attached to a structure or affixed to the ground. Includes *Wall Signs, Free standing Signs, Projecting Signs, Painted Signs, and Barber poles.* Permanent signs are intended to advertise or call attention to any item, business, activity, or place; are visible from outside a building; and are intended to be in place for longer than thirty days.

42. Sign, Projecting – A mounted sign that projects from and is supported by a wall of a building.

~~26.~~43. Sign, Real Estate – A temporary sign that relates to the sale, lease, or rental of property or buildings, or to construction activities on a site.

44. Sign, Service – An interior sign whose purpose is not to advertise the business displaying the sign, but to inform or provide for the safety of the public. Signs such as credit card placards, and "No Smoking" signs are examples of service signs.

45. Sign, Shingle – A sign suspended from and located entirely under a covered porch, covered walkway, or an awning.

~~27.~~46. Sign, Statuary – Any sign which is a modeled or sculptured likeness of a living creature or inanimate object intended to be used as an advertising device.

~~28.~~47. Sign, Temporary – A sign not permanently attached to a structure or to the ground. Examples of temporary signs include garage sale signs, temporary sale signs, contractor signs, banner signs, A-frame signs, T-frame signs, candidate signs, and real estate signs. Temporary signs shall only be displayed for a limited period. The definition of *temporary sign* does not include flags.

~~29.~~48. Sign Walker – A person (or persons) waving "sales theme signs" with arrows at entrances to major highways or at corners of high traffic intersections directing customers to a sale. Also called sign twirlers, sign holders, human billboards, and sign events.

49. Sign, Wall - A sign attached flush to the exterior surface of a building, or permanently applied to the exterior of a window of a building. The sign must not project above the roof. Light sources aimed at the wall sign may project further out from the wall.

~~30.~~50. Sign, Window – A sign affixed to the interior or exterior of a window or placed immediately behind a window pane so as to attract the attention of persons outside the building.

[Ord. No. 457; Ord. No. 472; Ord. No. 478]

D. APPLICABILITY

The provisions of this section shall apply to all signs placed or maintained within the Town of Jerome, with the exception of the following:

1. Non-illuminated names of buildings, dates of erection, monument citations, commemorative tablets and the like when carved into stone, concrete, metal, or any other permanent type construction and made an integral part of a permitted structure or made flush to the ground.
2. Signs required by law or signs of a duly constituted governmental body, such as traffic signs, warning signs, or no trespassing signs.
3. Signs placed by a public utility for the safety, welfare, or convenience of the public, such as signs identifying high voltage, public telephone, or underground cables.
4. Notices regarding parking, directions, or trespassing on private property.
5. Signs upon a vehicle, provided that any such vehicle is actively used for bona fide delivery or other business purposes.
6. Bumper stickers on a vehicle.
7. Temporary signs for town-sponsored or co-sponsored events.

[Ord. No. 457; Ord. No. 478]

E. PERMITS

1. A sign permit shall be required before a permanent sign may be placed, constructed, re-constructed, or altered within the Town of Jerome, with the exception of the following:
   a. A-frame signs which are on private property (see additional standards regarding A-frame signs in paragraph G.9 of this Section).
   b. Changeable-Copy Signs.
   c. Directional Signs.
   d. Exterior temporary signs in the residential districts.
   e. Name-plate signs and business door identifiers not exceeding two -by twelve inches (2" x 12").
   f. Repainting or maintenance of signs, provided there is no change in size, shape, wording, composition, or color.
   g. Signs not permanently affixed to a window and located entirely within an enclosed building.

2. An application for a permanent sign permit shall be filed with the Zzoning Aadministrator on a form prescribed by the zoning department and shall be accompanied by the required number of copies. Each copy shall be on one or more sheets of paper measuring no larger than 24 by 36 inches drawn to scale, which shall show the following:
   a. Signature of the applicant.
   b. The name and address of the sign owner and sign erector.
   c. Drawings showing the design, dimensions, color, material, and structure of the sign.
   d. A drawing or photograph of the building facade indicating the proposed location of the sign, and all other existing signs maintained on the premises and regulated by this ordinance.
   e. Proposed method of lighting the sign.
   f. Any additional information that the Historic Preservation/Design Review Board may require in order to decide on the application, in accordance with Section 304.H.4 of the Zoning Ordinance.
   g. Payment of a nonrefundable, one-time filing fee in an amount established by a schedule adopted by resolution of the Council and filed in the offices of the town clerk. Applicant may resubmit a modified plan without paying an additional fee. Payment of the filing fee shall be waived when the applicant is an agent of the town, county, state, or federal government.
3. Plan Review

   The ~~z~~Zoning ~~a~~Administrator shall review and accept completed plans in accordance with the provisions of Section 304. These plans shall be placed on the agenda of the next Historic Preservation/Design Review Board meeting.
4. Design Review

   The Historic Preservation/Design Review Board shall, in accordance with the provisions of Section 304, deny, approve, or conditionally approve any application for a sign permit. Upon approval of an application by the Historic Preservation/Design Review Board, the ~~z~~Zoning ~~a~~Administrator shall be instructed to issue the sign permit.
5. The Historic Preservation/Design Review Board may waive the requirements of this section in order to allow the preservation or restoration of signs or commercial graphics determined to be of historical significance.

[Ord. No. 457; Ord. No. 472; Ord. No. 478]

F. REGULATIONS APPLICABLE TO SIGNS IN ALL ZONES

1. The design, color, shape, materials, and style of permanent signs shall be subject to review and approval of the Historic Preservation/Design Review Board.
2. All signs shall be constructed, designed, or attached to structures in conformance with the building code adopted by the Town of Jerome.
3. No sign, mannequin, skeleton or statue shall be constructed or placed in the clear vision triangle, erected or lit in such a manner as to interfere in any way with the flow of traffic on the public right of way, or present a traffic hazard.
4. No sign or mannequin/skeleton/statue shall be constructed or placed in such a manner as to interfere with pedestrian traffic on public or private walkways, stairs, and/or handrails.
5. Freestanding signs shall not exceed four (4) feet in height.
6. Organizations as defined herein are allowed temporary signs without a permit or review for temporary special event banners or signs. Banners for special events must be removed within three (3) days of the close of any event and may not be hung on Town property without

permission of the Town of Jerome. The town manager may approve special event banners to be hung on town property for recurring events. Banners to be hung on town property for first-time events shall be approved by the town council.

7. Lighting shall be directed at the sign from an external light source and shall be installed so as to avoid any glare or reflection into any adjacent property, or onto a street or alley so as to create a traffic hazard. These restrictions shall apply to internally lighted signs, which may be allowed if constructed of metal or wood. No internally lit signs that are constructed of acrylic or plastic are allowed. No sign that flashes or blinks shall be permitted outside. No visible bulbs, neon tubing, or luminous paints shall be permitted as part of any sign.
8. Any existing nonconforming, permanent sign legally constructed or permitted prior to the adoption of this ordinance may be continued in use; if such a sign is damaged, it may be restored or repaired. If a new sign is constructed, it must conform to the provisions of this Section 509 and Section 501.
9. Signs shall be removed within thirty (30) days of business relocation or closure.
10. If any sign becomes a danger to the public or becomes deteriorated or is abandoned, the property owner or owner of the sign shall be notified to remove or repair the sign. If they do not comply within ten (10) days, the zoning administrator shall have the sign removed and the cost assessed to the owner of the property on which such sign is located.
11. Painted Signs. Painted signs shall be subject to review by the Historic Preservation/Design Review Board in accordance with Section 304.H.4 of the Zoning Ordinance. The maximum number and area of painted signs shall be subject to the same restrictions and standards as other permanent signs.
12. Flags. Unless otherwise required by state law or specified in this article, no more than two (2) flags may be displayed on a flagpole, from a flag bracket, or on a flag stanchion. Examples of flags include, but are not limited to, the insignia of any nation, organization of nations, state, province, county, city; any religious, civic, or fraternal organization, or educational institution. The area of each flag shall not exceed sixteen (16) square feet, and the height of the flag shall be no taller than the building to which it is attached. For the purpose of determining the area of a flag, only one side of the flag shall be counted. Flags may be externally illuminated. A sign permit is not required for a flag.

[Ord. No. 457; Ord. No. 472; Ord. No. 478]

G. REGULATIONS APPLICABLE TO SIGNS IN RESIDENTIAL ZONES

1. One nameplate sign not exceeding 2 by 12 inches indicating the names of the occupants or business, and one set of numbers ~~4~~ 4 by 12 inches indicating the street address shall be allowed for each dwelling unit without a permit.
2. One nonilluminated sign not exceeding eight (8) square feet in area shall be allowed on premises only to identify a home business and requires a permit and review by the Historic Preservation/Design Review Board. A two-sided sign is one sign.
3. No sign shall extend above the eaves line of a building or extend higher than ten (10) feet above the ground directly below it.
4. Temporary signs shall be permitted in the residential zones without a permit, subject to the following provisions:
   a. The sum area of all temporary signs does not exceed five (5) square feet in size.
   b. If the temporary sign pertained to an event (such as an open house or garage sale), the sign shall be removed within three (3) days of the completion of the event or activity that is being advertised.

c. Signs shall maintain a minimum setback from the right of way of ten (10) feet, unless there is a primary structure on the lot located closer to the right of way than ten (10) feet, in which case the sign may be placed at the same setback as the primary structure.

d. The maximum height of a temporary sign is four (4) feet.

e. Signs shall not be illuminated.

[Ord. No. 457; Ord. No. 472; Ord. No. 478]

H. REGULATIONS APPLICABLE TO SIGNS IN COMMERCIAL AND INDUSTRIAL ZONES

1. No more than two (2) permanent signs are permitted for any one business except that a business having frontage on and physical access from two (2) or more streets will be allowed a total of three (3) signs.
2. The maximum area of all permanent signs shall not exceed 32 square feet.
3. The area of any single wall, projecting, freestanding or canopy sign shall not exceed 16 square feet.
4. No sign shall extend above the roof of the building to which it is attached.
5. The bottom of any projecting sign shall be no lower than 8 feet above the ground directly below it.
6. No part of any projecting or freestanding sign may project over any roadway.
7. One (1) set of address numbers not exceeding 4 4 by 12 inches in total area shall be allowed in addition to normal sign allowances.
8. Temporary signs, which are promotional in nature and intended to advertise a specific event, activity, or business, are allowed in addition to other signs. Examples of temporary signs include, but are not limited to banner signs. Temporary signs must meet all restrictions for signs in this section in addition to the following:
   a. The sum area of all temporary signs shall not exceed sixteen (16) square feet.
   b. A maximum of one (1) temporary sign may be placed on the property.
   c. No business may display a temporary sign for more than thirty (30) consecutive days twice per calendar year.
   d. If the temporary sign pertained to an event (such as an open house or garage sale), the sign shall be removed within three (3) days of the completion of the event or activity which is being advertised.
   e. Temporary signs shall maintain a minimum setback from the right of way of three (3) feet, unless there is a primary structure on the lot which is located closer to the right of way than three (3) feet, in which case the sign may be placed at the same setback as the primary structure.
   f. Temporary signs require administrative approval from the zoning administrator. Applications shall be submitted on a form prepared by the zoning administrator and shall demonstrate compliance with the standards of this section.
   g. Application for a temporary sign shall include payment of a nonrefundable, one-time filing fee in an amount established by a schedule adopted by resolution of the Council and filed in the offices of the town clerk. Payment of the filing fee shall be waived when the applicant is an agent of the town, county, state, or federal government.
   h. Temporary signs shall not be illuminated.
9. A-frame signs are allowed without a permit provided they meet the following requirements:

a. They do not exceed four (4) square feet in size.

b. They do not exceed four (4) feet in height.

c. They are located entirely on private property owned by the business that they are advertising.

d. They are not left outside during non-business hours.

10. Changeable-copy signs are allowed without a permit provided they do not exceed four (4) square feet in size and are attached to the façade of a building. A maximum of one sign per business is allowed.

11. Directional signs are permitted in addition to normal sign allowances. No more than two (2) directional signs are allowed with a maximum total area of eight8 square feet. Directional signs do not require a permit.

12. Service signs offering information on incidental services or recommendations, e.g., VISA, MasterCard, WiFi, etc., are permitted in addition to normal sign allowances provided:

e. They conform to all provisions contained in this section.

f. They are inside a window.

g. There is no more than one (1) sign per incidental service per public entrance to the business.

h. Each sign does not exceed 16 square inches in area.

[Ord. No. 457; Ord. No. 472; Ord. No. 478]

I. PROHIBITED SIGNS

1. Abandoned signs
2. Billboards
3. Digital or electronic signs with changeable copy
4. Flying banners
5. Flashing or blinking signs
6. Gas-generated signs
7. Inflatable and balloon signs
8. Mannequins/skeletons/statues displaying, wearing, or holding any advertising content such as flyers, business cards, or other promotional materials.
9. Moving and rotating signs – including rotating barber poles
10. Off-premise signs in the commercial or industrial zoning districts
11. Signs attached to or painted on trees, rocks or other natural features
12. Signs emitting any sound designed to attract attention
13. Signs in the clear vision triangle
14. Signs in the right-of-way
15. Signs blocking pedestrian pathways, stairs, or handrails
16. Signs painted on fences
17. Sign walkers
18. Signs with visible bulbs or luminous paints

[Ord. No. 472; Ord. No. 478]

SECTION 510. PARKING AND LOADING REQUIREMENTS

A. PURPOSE

The purpose of this section is to alleviate or prevent congestion of the public streets, and to promote the safety and welfare of the public by establishing minimum requirements for the off-street parking of motor vehicles in accordance with the use to which the property is put, It is the further purpose of this section to place upon the property owner the primary responsibility for relieving public streets of the burden of on-street parking.

B. APPLICATION

The provisions of this section are applicable to all zone districts of this Ordinance.

~~B.~~C. GENERAL REGULATIONS

1. A parking space shall mean an area of not less than one hundred sixty (160) square feet with a minimum width of eight (8) feet and a minimum depth of twenty (20) feet, which is specifically designated for and used for the parking of automobiles and light trucks.
2. An applicant for a new building permit must submit plans showing the off-street parking required by this subsection. These plans must show location, arrangement, and dimensions of the off-street parking, turning spaces, drives, aisles, and ingress and egress, and must be approved by the Zoning Administrator in accordance with the provisions of Section 303.
3. Whenever a permit has been issued in compliance with the requirements of this section, subsequent use of the structure, or use of land, is conditioned upon the unqualified availability of off-street parking as shown in the plans submitted in support of ~~prerequisite to~~ receiving the permit.
4. A base number of parking spaces shall be established for an existing building's designated use~~,~~ at the time of the passage of thise o Ordinance. A building's subsequent change of use that would normally decrease the number of off-street parking spaces shall not reduce the established base number of parking spaces. A change of use that would decrease the parking spaces would be able to change back to a higher use without penalty of losing spaces for five (5) years. Any subsequent change of use that requires an increase of off street parking spaces beyond the established base number of parking spaces shall be in accordance with the schedules set forth in Section 510.D.
5. It is unlawful to reduce the amount of existing parking below the minimum required by this section without first supplying other spaces as are required.
6. In the event of mixed uses, the total requirement for off-street parking spaces is the sum of the requirements of the various uses computed separately.
7. All off-street parking shall have access to/from a public street.
8. In calculating the total number of required off-street parking spaces, fractional amounts over fifty (50) percent shall be regarded as the next highest number.
9. A minimum of one (1) space is required for any use.

~~C.~~D. DESIGN AND LOCATION OF PARKING SPACES

1. Residential Uses:
   a. Required off-street parking shall be located on the same lot or parcel as the use it is intended to serve, unless parking on a property within 500 feet that shares the same zoning designation as the subject property is available to the property owner. Those spaces may count toward the required parking. As part of the application, the property owner shall provide satisfactory assurance that the separate lot or parcel is permanently committed to parking use by deed restriction or recorded easement.
   b. Off-street parking spaces, driveways, and access ways shall be properly graded to prevent impoundment of surface water.

2. Non-residential Uses:

   a. Required off-street parking shall be located within the C.1. Zone. Whenever the use of a separate lot or parcel is proposed for fulfillment of minimum parking requirements, the owner shall submit, as part of ~~his~~ their application, satisfactory assurance that the separate lot or parcel is permanently committed to parking use by deed restriction or recorded easement.

   b. Off-street parking spaces, driveways, and access ways shall be fully improved with an all-weather, dust-free surface, and properly drained to prevent impoundment of surface water.

   c. Off-street parking spaces shall be situated in a manner which will not result in automobiles backing onto a public street.

   d. A variance from the requirement of Section DC.2.c. may be granted by the Board of Adjustment if compliance with this section is geographically impossible. If such a variance is granted, it shall be required as a condition of the variance that traffic signs shall be placed by the Town, after approval by the Historic Preservation/Design Review Board, and paid for by the applicant, alerting crossing traffic of automobiles backing onto public streets in all areas except those abutting the State highway.

~~D.~~E. SCHEDULE OF REQUIRED OFF-STREET PARKING SPACES

1. Off-street parking spaces shall be provided for each specified use in accordance with the following schedule. "Usable area" as used herein shall mean the area capable of being devoted to the specified use (does not include such spaces as kitchens, restrooms, hallways, etc.). If the use of any structure is changed, off-street parking shall be required and provided under the new use.

	USE	SPACE REQUIRED
a.	Bowling alley	4 spaces per alley or lane
b.	Church or other place of worship	1 space per 6 seats (each 30 inches of bench space is considered 1 seat), plus 1 space per 50 sq. ft. of usable area not used for seating
c.	Day care center	2 spaces plus 1 space per 500 sq. ft. of usable floor area
d.	Home occupation	No additional space
e.	Hospital or nursing home	1 space per 2 beds
f.	Hotel	1 space per rental unit
g.	Manufacturing, industry	1 space per 500 sq. ft. of wholesaling usable area
h.	Medical, dental office, or clinic	3 spaces per doctor
i.	Offices	1 space per 300 sq. ft. of usable area
j.	Public assembly place such as auditorium meeting hall or theater	1 space per 6 seats (each 30 inches of bench space is considered 1 seat), plus. 1 space per 100 sq. ft. of usable area
k.	Residential (except apartment)	2 spaces per dwelling unit
l.	Residential (apartment)	1 ½ spaces per dwelling unit
m.	Restaurant or bar	1 space per 6 seats (each 30 inches of bench space is considered 1 seat) plus 1 space per 100 sq. ft. of usable area
n.	Retail and service uses	1 space per 300 sq. ft. of usable area
o.	School (elementary and middle)	1 space per employee
p.	School (other than elementary and middle)	1 space per 10 seats in main auditorium or 3 spaces per classroom whichever is greater
q.	Service station	2 spaces, plus 1 space per service bay
r.	Warehouse	1 space per 2,000 sq. ft. of usable area

s.	Studio	1 space per 500 sq. ft. of usable area
t.	Spirituous Liquor Tasting Facility	1 space per 300 sq. ft. of usable area

2. Requirements for a specific use not listed in this section shall be determined by the Planning and Zoning Commission based on the requirements of the most similar use listed.

[Ord. No. 324; Ord. No. 408; Ord. No. 465]

F. ALTERNATIVE OFF-STREET PARKING STANDARDS

1. Because of the unique topography and history of development in the Town of Jerome, the ability to meet off-street parking standards can often be challenging. Providing greater flexibility to meet off-street parking requirements through shared parking agreements, existing public parking and shuttle services, and a parking justification analysis that establishes the minimum parking need for a use will create more opportunities for the preservation, rehabilitation, restoration, and reconstruction of properties throughout the Town of Jerome. The following standards are provided as an alternative and may be used in lieu of the standards in Section 510.D.

2. Neighborhood Meeting Required Near Existing Residential Development

   a. Applicants within 300 feet of an existing residence who opt-in to these alternative parking standards shall hold a neighborhood meeting prior to submittal of the application in accordance with Section 306 of this Ordinance.

3. Parking Requirements

   a. At least two off-street spaces shall be provided for residential uses except apartments.

   b. For all other uses, a parking justification analysis shall be provided.

      1) The Parking Justification Analysis shall include the following minimum contents:

         i. An analysis of the parking demand for existing and proposed onsite buildings and uses, including hours of operation and peak use time and demand for each proposed building or use.

         ii. The number and location of proposed onsite parking spaces, including ADA-accessible spaces.

         iii. The data source used to establish the number of proposed onsite parking spaces.

         iv. The existing and future anticipated available parking within and in the vicinity of the proposed development.

         v. If parking demand is proposed to be addressed offsite, reference to or copies of any shared parking agreement or other evidence of a right to park in that location.

         vi. Off-street loading requirements and impacts on surrounding uses and properties.

         vii. A summary of the neighborhood meeting, including topics discussed, concerns raised by neighboring property owners, and the applicant's response.

         viii. Any other information deemed appropriate by the Town Engineer, including, without limitation, a traffic study.

      2) Parking Justification Analysis Procedure

         i. The parking justification analysis shall be submitted to the Zoning Administrator in conjunction with a site plan. The Zoning Administrator shall circulate the parking justification analysis to the Town Engineer for comment. The Zoning Administrator and/or Town Engineer shall review the application and provide comments on specific deficiencies of the application. An applicant may revise the parking

justification analysis until it is deemed satisfactory by the Zoning Administrator and Town Engineer.

ii. Within fourteen (14) days of receipt of a parking justification application, the Zoning Administrator shall determine the completeness of the application. If the application is incomplete, the Zoning Administrator shall provide the applicant with a comprehensive list of the specific deficiencies in a written notice. A resubmittal of an incomplete application shall be reviewed for completeness within seven (7) days. If the application is deemed to be complete, the Zoning Administrator shall forward the parking justification analysis to the Planning and Zoning Commission, which shall hear the application for parking justification.

iii. The Zoning Administrator shall then choose a reasonable time for the hearing, and shall give notice to interested parties and to the public by publication of a notice in a newspaper of general circulation in the area, and by posting one notice of the hearing on the property requesting the parking modification, not less than fifteen (15) days prior to the hearing. The notice shall set forth the time and place of the hearing, including a general explanation of the matter to be considered.

iv. The Commission shall act by recommending approval, denial, or continuing the application and hearing to a time and place certain.

v. The Council shall, within forty-five (45) days after the Commission action on a parking justification application, act on the recommendation of the Planning and Zoning Commission by either affirming, denying, or modifying the recommendation of the Planning and Zoning Commission. The Town Council may make a decision based on its own findings.

vi. The Council may designate such conditions in connection with the proposed alternative parking request as it deems necessary to secure the intent and purpose of this Ordinance and may require such guarantees and evidence that such conditions are being, or will be, complied with.

vii. The Council's decision shall be final and shall become effective immediately. Notice of the decision shall be mailed to the applicant at the address shown in the application.

viii. Failure of the applicant to comply with the conditions and safeguards that are a part of the terms under which an alternative parking request is granted shall be deemed a violation of this Ordinance and punishable under Section 110.

3) Standards for Parking Justification Analysis Consideration

i. The application for a parking justification analysis may be denied if it fails to address any adverse impacts on surrounding properties or the public.

ii. Parking demand may be based on standard modeling practices and may consider, as applicable, hours of operation, peak use periods, occupancy or capacity, employee and visitor demand, shared parking opportunities, availability of public parking and the Town shuttle, walkability, seasonality and tourism patterns, and other relevant site-specific or market-based factors.

SECTION 511. HISTORIC OVERLAY DISTRICT

~~i.~~ [CODIFIER'S NOTE: This subsection was rewritten with Ordinance 497 and moved to new Section 409.]

SECTION 512. LANDSCAPE REQUIREMENTS

Exceptions to the standards of this section may be granted by the ~~Zoning Administrator~~ Town Council when it is determined that landscaping may interfere with defensible space techniques for wildfires or that the circumstances of a property make it infeasible to comply without significant expense to the property owner. Any individual may apply for a waiver to the standards of this section. Any appeals of decisions made by the Mayor and Council or Zoning Administrator to the standards of this section shall be heard by the Board of Adjustment.

A. NATIVE PLANT & CULTURAL LANDSCAPE INVENTORY PLANS

This section is intended to protect and celebrate the unique local environment within the Town of Jerome and the greater Verde Valley.

1. Purpose:

Preserve the Town of Jerome's sense of place by ensuring development reflects the character of the local environment, promotes water conservation through the use and retention of native plant species adapted to local conditions, protects vegetation that provides habitat for native wildlife, and conserves designed landscapes, historically significant plants, and spatial relationships that contribute to the Town's cultural and historic character.

Development shall incorporate into Landscape Plans protected native plant species and cultural landscape features existing on a project site prior to construction, in quantities not less than those identified within the limits of disturbance. A qualified Plant Professional (defined below in *Section 512.A.6: Professional Expertise*) shall inventory all protected plants, including individual specimens and contributing landscape features such as gardens and plazas, and shall determine and document the minimum number of protected plants to be included in the Landscape Plans. Plant salvage is encouraged but not required; salvaged material and/or nursery stock may be used to meet these requirements. Cultural and designed landscapes that meet the eligibility requirements of the National Register of Historic Places but are not listed shall be included in the inventory.

2. Applicability:

a. All new development requiring a Site Plan or Preliminary Plat review.

~~expansion of an existing non-residentialcommercial development.~~

3. Exceptions:

a. The site is for one single-family dwelling unit or a single duplex, triplex, or quadplex.

b. The site does not contain any:

1) Plants listed as Endangered or Threatened under the Federal Endangered Species Act (ESA); ~~or~~

2) Plants listed on the Protected Native Plant List curated and maintained by the Town of Jerome; ~~or~~

3) ~~any f~~Features or plants that contribute to the cultural landscape of the Town of Jerome; or

4) Other protected plants or features listed in *Section 512.A.8: Protected Plants and Landscapes*.

c. Existing constructed landscape does not require inventory unless it has been deemed historic and is listed on a local, State, or Federal registry.

d. ~~At the discretion of the Zoning Administrator (e.g., site has been disturbed, plant health is poor, etc.)~~Sites that have been completely disturbed, or the proposed development area of a site has been completely disturbed, and no cultural landscapes exist.

e. If a Native Plant Exception is approved by the Town Council.

1) The Town Council may approve an exception to the requirements of this section upon recommendation of the Planning and Zoning Commission if the applicant demonstrates that:

i. Strict compliance with this Section is impractical due to site conditions, prior disturbance, public safety concerns, or the limited presence and/or poor condition of protected plants or cultural landscape features on the site;

ii. The requested exception is the minimum necessary to address the circumstances supporting the request; and

iii. The exception will not result in the unnecessary removal of protected plants, cultural landscape features, or historic resources.

iv. If the requested relief may be granted through the variance process established by this Ordinance, the applicant shall pursue a variance. A Native Plant Exception shall not be scheduled for consideration by the Planning and Zoning Commission or Town Council unless the Zoning Administrator determines that the requested relief is not eligible for a variance.

v. A Native Plant Exception shall be processed in accordance with the procedures outlined in Section 303.1.

4. Submittal Requirements:

a. A Native Plant & Cultural Landscape Inventory Plan is required in conjunction with a project's Landscape Plans and must be approved through the Site Plan or Preliminary Plat review process.

b. The Native Plant & Cultural Landscape Inventory Plan shall be in 24x36-inch format unless information can be shown clearly on a smaller sheet size.

c. The Native Plant & Cultural Landscape Inventory Plan shall feature the ~~following~~ content requirements as provided by the Zoning Administrator in the Landscape Guide for the Town of Jerome.~~:~~

5. Plan Approval Prior to Site Modifications:

a. No grubbing, grading, construction, or plant salvage may take place on the project site until approval of the required Native Plant & Cultural Landscape Inventory Plan. No grading permits shall be issued prior to submittal and approval of the Native Plant & Cultural Landscape Inventory Plan.

6. Professional Expertise

a. Native plant inventory must be performed by a Plant Professional who can identify plant species in the field. Unless otherwise directed or approved by the Zoning Administrator, plant professionals include:

1) Arborist (certified by the International Society of Arboriculture)

2) Landscape Architect

3) Horticulturist, Biologist, or Botanist with a minimum B.A. or B.S. in an appropriate environmental resource field

7. Plant Inventory Standards

a. Plant Professional shall conduct a plant survey and tag all protected species within the project's grading limits.

b. All protected plants shall be tagged with an embossed metal tag, or other approved equivalent, bearing an inventory number that corresponds to the inventory table.

8. Protected Plants and Landscapes

a. Edible/ornamental trees and plants at the discretion of the Zoning Administrator

b. Individual plants within Cultural Landscapes that have been deemed historic and are listed on a local, State, or Federal registry.

c. Endangered or Threatened plants listed under the Federal Endangered Species Act.

d. Other plants as listed on the Town of Jerome's Protected Native Plant List.

B. LANDSCAPE PACKAGES

This section is intended to establish minimum standards for the installation and maintenance of plant material appropriate for the region, including irrigation for constructed landscapes.

1. Purpose:

Reinforce the Town of Jerome's sense of place by ensuring constructed landscapes reflect the character of the local environment and respond to the semi-arid high desert climate, while establishing minimum standards for plant materials and irrigation.

Constructed landscapes shall incorporate native, near-native, and drought-tolerant plant species to reduce water demand and reflect the surrounding environment. Design shall minimize heat gain through canopy trees, reduce erosion and runoff, and control dust from site disturbance.

Landscape Packages shall incorporate passive rainwater harvesting and efficient irrigation, including smart technologies, to reduce potable water use. A Registered Landscape Architect, or similar design professional, shall prepare a Landscape Package demonstrating compliance with this section, including a Planting Plan, Irrigation Plan, Rainwater Harvesting Plan, and associated construction details.

2. Applicability:

a. All new development that is proposed to disturb existing vegetation on a property.

b. Expansion of existing development that removes existing vegetation on a site

1) If the expansion removes less than 50% of the existing vegetation on a site, then the standards of this section only apply to the proposed expansion area.

2) If the expansion area removes more than 50% of the existing vegetation on a site, then the standards of this section apply to the entire site.

3. Exceptions:

a. Single-Family dwelling units or a single duplex, triplex, or quadplex.

b. An applicant may apply for a Landscape Exception to waive the standards of this section. The Landscape Exception shall be approved by the Town Council. To approve a Landscape Exception, the Town Council shall determine that the required landscape standard would provide limited community benefit, create security or public safety concerns, adversely affect the historic character of a building or place, or that existing site features provide an equivalent level of buffering or screening. A Landscape Exception shall follow the process outlined in Section 303.1. If the requested relief may be granted through the variance process established by this Ordinance, the applicant shall pursue a variance. A Landscape Exception shall not be scheduled for consideration by the Planning and Zoning Commission

or Town Council unless the Zoning Administrator determines that the requested relief is not eligible for a variance.

4. Submittal Requirements

a. A Landscape Package~~lan~~ must be submitted for approval with the Site Plan or Preliminary Plat at the time of the Site Plan or Preliminary Plat review process.

b. The Landscape Package~~lan~~ shall be in 24x36-inch format unless information can be shown clearly on a smaller sheet size.

~~-~~The Landscape Package~~lan~~ shall feature the~~-~~ content requirements as provided by the Zoning Administrator in the Landscape Guide for the Town of Jerome and within Section 512 of this Ordinance.~~:~~

~~c.~~c.

5. Plan Approval Prior to Site Modifications:

a. No grubbing, grading, construction, or plant salvage may take place on the project site until approval of the required Landscape Package~~lans~~. No grading permits shall be issued prior to submittal and approval of the Landscape Package~~lans~~.

6. Professional Expertise

a. Landscape Packages~~lans~~ must be prepared and sealed by a Landscape Architect, registered in the State of Arizona, or other design professional, such as an architect or engineer.

7. Planting Standards

a. Plant Material: All plant material used for landscaping must be selected from the Arizona Department of Water Resources (ADWR) Verde Valley Low Water Use Drought Tolerant Plant List or other plants as determined by the Town Council through a landscape exception~~Zoning Administrator~~.

1) Exceptions

i. Oasis Areas and/or Natural Turf Area may be approved by the Town Council ~~Zoning Administrator~~ as a landscape exception.

1. Oasis areas may feature plants not listed in the Arizona Department of Water Resources Low Water Use and Drought Tolerant Plant List.

2. Oasis areas must be limited in scope and shall only include areas with outdoor seating/furnishings for gathering/assembly. Oasis areas shall not exceed 10% of the total project area.

3. Oasis areas include: planting areas (beds or planters) for annual flowers, protected courtyards, vegetable gardens, etc.

4. Natural Turf areas may feature grasses not listed in the ADWR Verde Valley Low Water Use and Drought Tolerant Plant List. Common Bermuda Grass is prohibited. Hybrid Bermuda Grass (sterile hybrid varieties) is permitted.

5. Natural Turf Area shall be limited to accessible park space for residential projects only. Natural turf shall not be planted for aesthetic purposes. Natural turf area may exceed 3% of the total project area when used for active recreation~~per the discretion of the Zoning Administrator~~.

ii. The Town Council ~~Zoning Administrator~~ may approve plants not on the Verde Valley Low Water Use Drought Tolerant Plant List if it is determined that the use of an unlisted plant preserves or furthers the historic character of the Town of Jerome.

b. Perimeter Landscape Borders: Perimeter Landscape Borders are intended to create a natural transition between dissimilar land use intensities to enhance the overall aesthetic of the community and promote compatibility between uses.

1) Perimeter Landscape Border shall feature:

i. A minimum width or quantity as determined by the Zoning Administrator;

ii. One tree every 33 linear feet (minimum) unless site constraints prohibit the placement of trees;

iii. Understory plants;

iv. Screen (e.g., decorative masonry wall, opaque ornamental fence, or vegetative hedge) at the back of the border. ~~May be waived at the discretion of the Zoning Administrator.~~

2) Perimeter Landscape Border shall be located entirely on project property, unless use of right-of-way for landscape improvement is approved by the Town Engineer (or ADOT as necessary).

3) Exceptions:

i. No perimeter landscape border shall be required along boundaries where zero lot line development is proposed.

ii. No perimeter landscape border shall be required along boundaries where the proposed project use intensity matches the existing adjacent use intensity.

iii. No perimeter landscape border shall be required along boundaries where the project has preserved natural open space (10' width minimum).

iv. ~~Perimeter landscape border and/or screening requirements may be waived, at the discretion of the Zoning Administrator, for instances where the border and/or screen may provide limited community value, security concerns, or impact the historic character of a building or place~~A Landscape Exception approved by the Town Council.

c. Parking Lot Landscape: Parking lots shall feature canopy trees to shade hardscape surfaces and parked vehicles. Generally, canopy trees should be planted along the edges of a parking lot, but site constraints may make this unfeasible. The Zoning Administrator shall have the authority to designate the location and quantity of parking lot trees.

d. Amenity Landscape: Amenity Landscape includes building foundation plantings, building entry plantings, plazas, courtyards, streetscapes, parks, and recreational open space, in addition to general landscaped common area.

1) Amenity Landscape shall feature:

i. Residential Projects: Minimum of one tree and three understory plants (i.e., shrubs, cacti, succulents, ornamental grasses, vegetative groundcovers) per residential unit or residential lot. Trees may be placed within front yards, within parks, along streetscapes, or within general common area. The Zoning Administrator may waive any portion of this standard for existing residential development being renovated, rehabilitated, or reconstructed.

1. Multifamily – New Construction: Trees shall be placed around buildings, along walkways, within plazas/courtyards, or within recreational areas.

2. Multifamily – Existing/Expansions: Per the direction of the Zoning Administrator and to the greatest extent possible, trees should be placed around buildings, along walkways, within plazas/courtyards, or within recreational areas.

ii. Streetscapes: The design of streetscapes has been influenced by the topography of the area and helps contribute to the unique character that defines the Town of Jerome. The following streetscape standards are meant to apply only to new streets and extensions of existing streets into previously undeveloped areas.

1. Proposed streetscapes shall feature a minimum of one tree and five understory plants (i.e., shrubs, cacti, succulents, ornamental grasses, vegetative groundcovers) for every 50 linear feet, on both sides of the road within 20' of the edge of pavement.

a. Exceptions:

i. Local residential roads that provide access to the front of residential lots. Front yard landscape may count toward streetscape requirements when trees and understory are located within 20' of the edge of pavement.

ii. Roadways adjacent to natural open space (set aside in perpetuity), or agricultural uses.

iii. ~~At the discretion of the Zoning Administrator~~ A Landscape Exception approved by the Town Council.

iii. Minimum Parks and Recreational Open Space (e.g., ball fields, sports courts, playgrounds, dog parks, fitness spaces, trails, pools, picnic spaces, etc.) Requirements

1. Residential Subdivision: 200 SF per lot, if subdivision is more than four (4) lots.

2.Multifamily: 200 SF per unit, if multifamily development is more than 25 units. Indoor recreation or fitness centers may count toward the total Parks and Recreational Open Space.

3. Parks and Recreational Open Space shall be designed in a contiguous manner to the extent feasible, in order to provide a maximum recreational value (e.g., a single large park is preferable to four small parks within a large subdivision).

4. An in-lieu fee may be paid to reduce the required Parks and Recreational Open Space square footage by 50% with the approval of the Zoning Administrator. Standard in-lieu fee = $1,500 per unit or lot.

e. Plant Sizes at Installation:

1) Trees: 15 Gallon minimum

2) Shrubs/Cacti: 5 Gallon minimum

3) Ornamental Grasses: 1 Gallon minimum

4) Vegetative Groundcovers: 1 Gallon minimum

5) Site Salvaged Plant Material: any size

f. Revegetation Standards

1) All areas of a project site that are disturbed during the construction process but not improved with structures, parking areas, or landscape shall be revegetated with native plants or native seed mixes.

i. Native Plant species shall be selected by the Landscape Architect and identified in the planting plans, along with Pure Live Seed (PLS) seeding rate lb. per acre.

ii. Native Seed Mixes shall be applied as a hydroseed slurry with tackifier, fertilizer, and mulch as necessary (according to soil conditions) to ensure plant establishment.

iii. Revegetation shall be designed and installed to achieve successful establishment consistent with site soils, slope, and climatic conditions.

2) Exceptions:

i. Revegetation shall not be required when the lack of vegetation is a defining element contributing to the character of a historic cultural landscape.

g. Irrigation Standards

1) All landscaped common area (unless noted as xeric – without the need for irrigation) shall feature a water-conserving irrigation system for all new plantings.

2) System Specifications

i. Meter: Water meter shall be a dedicated irrigation meter.

ii. Reduced Pressure Backflow Preventer (RPBP): A reduced-pressure backflow preventer shall be installed to prevent contaminated water from mixing with clean municipal water supplies.

iii. All landscape areas shall feature permanent point-source drip irrigation systems. Drip systems shall irrigate with low-flow emitters. Spray irrigation systems may only be used for turf applications unless otherwise approved by the Zoning Administrator. Temporary spray systems may be used to establish hydroseeded areas.

iv. Permanent irrigation systems shall be fitted with irrigation controllers/timers (hardwired, battery-operated, or solar) to operate zone valves that respond to plant water needs throughout each season of the year.

v. Irrigation controllers shall accommodate contemporary smart technologies. All systems shall include a minimum of: one (1) flow sensor and one (1) weather-based sensor/application (i.e., rain sensors, tensionmeters, soil moisture gauges, weather stations, automatic seasonal adjustment applications, internet-connected weather data applications, etc.).

vi. Pipes carrying water under constant pressure must be buried to a depth of 24 inches. Those that are under intermittent pressure must be buried to a minimum depth of 18 inches, as necessary to prevent freezing.

vii. All non-pressure irrigation piping shall be buried a minimum of 12 inches, with greater depth required where necessary to prevent freezing or damage.

viii. Pipes under paved surfaces must be contained within pipe sleeves.

ix. All irrigation equipment shall be protected (boxes, cages, cabinets, etc.) to ensure that irrigation equipment is not exposed to adverse weather conditions (freezing, solar degradation, etc.) or vandalism.

3) System Design

i. Irrigation zones shall consider plant irrigation needs throughout seasons, plant establishment periods, and maturity.

1. It is recommended that trees and understory be kept on separate irrigation zones.

2. It is recommended that amenity area landscape and landscape borders be kept on separate irrigation zones.

ii. Irrigation zones that feature native plants (or drought-tolerant plants with similar irrigation demands) may be turned off after plant establishment periods, as long as plant growth and health do not decline.

4) Maintenance

i. Irrigation systems must be maintained and replaced as necessary to continue to conserve water. Detection and repair of leaky or broken pipes, valves, and fittings, as well as malfunctioning and/or misaligned heads and emitters must be a part of a regular maintenance program for the site.

h. Rainwater Harvesting Standards

1) All landscaped areas shall be depressed between 4" and 9" to collect rainwater.

i. Exceptions

1. Areas identified by the project engineer or Town Engineer that cannot accommodate rainwater harvesting (for purposes of safety or functionality),

2. Areas with a cross slope greater than 4%,

3. Within 10' of a building foundation,

4. Within 10' of a utility,

5. Within a utility or access easement.

6. Landscape areas that feature plants with limited water tolerance (e.g., Opuntia spp., Cylindropuntia spp., Yucca baccata, Agave parryi) shall be designed to minimize supplemental irrigation. Basins may be terraced to accommodate plants with varying water needs. Plants with high water needs shall be located at basin bottoms. Plants with moderate water needs shall be located at basin terraces/side slopes. Plants with limited water needs shall be located at the top of basins.

2) Rainwater Basin Design

i. Basin slopes shall not exceed 3:1.

ii. Basin depths shall not exceed 9".

iii. Basin floor soils shall be loosened to a depth of at least 12".

iv. Basin sides and bottoms shall be covered in 1"+ screened rock or bark mulch (no "minus" material is permitted) to a depth of 2". Alternatively, basins may be seeded with native seed mix.

v. Scuppers, curb cuts, and rooftop downspouts shall correspond to the location of rainwater harvesting basins

vi. Basins shall receive water from adjacent hardscape surfaces to the greatest extent feasible. Some basins, however, may only collect rainwater where it falls.

vii. Berms, gabions, check dams, weirs, and other drainage structures are all recommended to direct, disperse, and slow the movement of rainwater in landscape areas. Rainwater harvesting structures shall be depicted in both the Landscape Plans and Drainage Plans.

viii. Maximum reveal at the edge of public sidewalks and pedestrian circulation paths should be two inches or less to minimize the risk of injury to pedestrians. A minimum 12" wide shoulder with a maximum 2% cross slope away from public sidewalks or pedestrian paths is required.

ARTICLE VI: EMERGENCY CLAUSE

WHEREAS, the immediate operation of the provisions of this Ordinance is necessary for the preservation of the public health, safety and welfare, and to carry out the expressed intent and purposes of said Ordinance, an EMERGENCY is hereby declared to exist, and this Ordinance shall be in full force and effect from and after the date of its passage by the Council.

PASSED AND ADOPTED by the Council of the Town of Jerome this ____ day of _____, 19___.

ARTICLE VII: SUBDIVISION REGULATIONS

SECTION 701. TITLE, PURPOSE, AND ADMINISTRATION

A. PREAMBLE

The purpose of these regulations is to provide for the health, safety, general welfare, and harmonious development of the Town of Jerome and environs, ~~; to insure that all future development shall be referenced and~~ in accordance with the principles, goals, and objectives of the adopted General~~Comprehensive~~ Plan and~~;~~ to ~~e~~insure that: all new development will strengthen the Town's economic base and valuation~~;: to einsure that~~, future development will preserve and enhance the Town's natural scenic attributes~~; to einsure that~~ , and all new development will maintain and encourage a pleasing environment and be in harmony with the special character and historical quality of Jerome. ~~-~~The purpose of these regulations is also to secure adequate provisions for streets and traffic circulation, water supply and distribution, sanitary sewerage, drainage and flood control, and in the development of lots and properties having optimum utility and livability. These regulations shall also facilitate the provision of lands for recreation and other public uses; promote the conveyance of land by accurate legal description; and establish procedures that~~which~~ will provide~~achieve~~ a basis of mutual understanding and equitable relationships between public and private interests.

B. AUTHORITY

The Jerome Subdivision Regulations are authorized by Title Nine, Chapter 4, Article 6, section 9-471 to 9-479 and Chapter 6, Article 1, Section 9-601 of the Arizona Revised Statutes, as amended, and are hereby declared to be in accordance with all provisions of these Statutes.

~~C. SHORT TITLE~~

~~For the purpose of identification, these regulations shall hereafter be referred to as the "Jerome Subdivision Regulations."~~

~~D.~~C. APPLICATION OF REGULATION

1. Final Plat Approval: No final plat shall be recorded or offered for record, nor shall any land be offered for sale with reference to such plat, until said plat has been recommended for approval to the Town Council by the Planning and Zoning Commission and approved by the Town Council. The Planning and Zoning Commission shall ascertain~~-~~, before recommending to the Council, that said plat has satisfied all requirements of these regulations.

2. Plans, Plats and Replats: All plans of streets, highways, alleys, or other portions of the same intended to be dedicated to a public use or to the use of purchasers or owners of lots fronting thereon or adjacent thereto, and all plans, plats, and replats of land laid out in a subdivision or building lots, shall be submitted to the Planning and Zoning Commission for approval. The Planning and Zoning Commission shall ascertain, before approving it, that said plan, plat, plot, or replat~~,~~ has satisfied all of the requirements of these regulations.

~~E.~~D. JURISDICTION

These regulations shall govern the subdivision of all land that lies within the corporate limits of the Town of Jerome. ~~The plat of a subdivision outside and within three (3) miles of the corporate limits which conforms to applicable regulations shall be approved and so recommended for approval to the Planning and Zoning Commission of Yavapai County. Any plat which does not conform to these regulations, or which is approved subject to changes, shall be so reported to the Planning and Zoning Commission, with the reasons therefor.~~

~~F.~~E. ADMINISTRATION

The Jerome Planning and Zoning Commission is hereby authorized to receive, process, and otherwise act upon preliminary and final subdivision plats in accordance with these regulations. ~~-~~The Town Zoning Administrator, the Town Engineer, and the County Health Department are hereby designated as Planning and Zoning Advisories to the Commission and the Town Council and charged

with the duty of investigating and reporting upon matters referred to them in accordance with these regulations.

No Final plat of a subdivision shall be approved by the Planning and Zoning Commission and accepted by the Town Council unless it conforms to the provisions of these regulations and to the provisions of the Zoning Ordinance for Jerome, Arizona.

~~G.~~F. FILING FEE SCHEDULE

The submission of a tentative or final plat, abandonment, amended plat, recording fee deed restrictions, exceptions, improvement drawing, etc., shall include payment submitted to the Town Zoning Administrator of a filing fee for the County Recorder. Fees shall be set by Resolution of the Town Council.

[Ord. 473, 8/10/2021]

NOTICE: The Final plat fees shall not be applied to subdivisions outside the Town of Jerome corporate limits.

The Town of Jerome may negotiate with the subdivider to acquire land for present or future municipal purposes in accordance with the laws of the State of Arizona.

SECTION 702. GENERAL REQUIREMENTS AND PROCEDURES FOR SUBMISSION OF PLATS

A. APPROVAL OF SUBDIVISION REQUIRED

1. ~~Until a preliminary plat and a final plat of a subdivision shall have been approved in accordance with this Chapter~~N, ~~n~~o person proposing a subdivision or owning unapproved lots or parcels within Jerome shall subdivide or file a record of survey, map or plat for record, or sell any part of said subdivision, or unapproved lots or parcels, or proceed with any grading, construction, or other work on said lot~~same.~~ until a preliminary and final plat of a subdivision have been approved in accordance with this Section.

2. Duties of Subdivider: While a subdivision is in the preliminary planning stage, the subdivider shall consult the Zoning Administrator to determine conformity ~~to~~ with the General~~Comprehensive~~ Plan, ~~including the Circulation Plan~~Element, ~~Minor Street Plan, District Map, and Zoning Regulations~~Map, ~~~~ and compliance with the provisions of *Article VII Subdivision Regulations*, any other applicable sections of the Zoning Ordinance~~Code~~ of the Town of Jerome~~of these regulations~~, and requirements for the design and installation of public improvements as required by the Town of Jerome.

3. The following factors should be considered in the preliminary stage of planning a subdivision:

   a. Need for additional residential sites in the area.

   b. Type and quality of homes to be built.

   c. Lot sizes most adaptable to the use proposed.

   d. Areas to be reserved for business or industrial use.

   e. Special scenic locations or areas of historical importance which need to be reserved.

   f. School and/or park sites that will be required.

   g. Access features which may be desirable along arterial and collector streets.

   h. Areas subject to flooding.

   i. Suitability of land for urban development.

   j. Water, sanitary sewer, solid waste disposal, storm sewer, electric, and gas utility services to be provided.

   k. Fire and police protection

   l. Integration of the subdivision with existing and proposed development.

   m. Whether the site is appropriate for the proposed use.

   n. Legal or tax problems likely to be encountered.

4. Preliminary Plat and Engineering Drawings. The subdivider shall prepare a preliminary plat of the proposed subdivision and other exhibits as specified in Section 703.B.

5. Final Plat and Recording. The subdivider shall prepare a final plat as specified in Section 703.D, which shall conform substantially to the preliminary plat as approved, and if desired by the subdivider, it may constitute only that portion of the approved preliminary plat which is proposed to be recorded and developed at the time, provided, however, that such portions conform to all requirements of these regulations. The approved and executed copy will be recorded in the Yavapai County Recorder's office after full compliance with the regulations, and one copy will be filed in the Planning and Zoning Commission's office, and one with the Town Engineer.

6. Building Permits and Certificates of Occupancy:

a. Building Permits. No Building shall be erected, or shall a building permit be issued for a building, unless the street giving access to the lot upon which such a building is proposed to be placed shall have been properly improved as required in Section 710.A.3.

b. Certificates of Occupancy. No certificate of occupancy shall be issued for any building unless all requirements of these regulations and any and all requirements of any other regulatory code, ordinance, or regulation have been met.

B. ~~MASTER PLAN AND~~ SKETCH PLAN AND MASTER PLAN REQUIREMENTS

1. ~~Pre-application Sketch Plan. Since agreement on the tentative plat is deemed a step of primary importance in these proceedings, I~~it is strongly recommended that the subdivider review the initial proposal for the subdivision with the Zoning Administrator prior to ~~the~~ preparingation of the required tentative plat, while ~~his~~ plans for the proposed subdivision are still in preliminary form and other elements of the proposed development remainare ~~still~~ flexible. The purpose at this stage is to make available general advice on the purpose and effect of these regulations, the General~~Comprehensive~~ Plan, zoning, and other Town planning, engineering, drainage, sewage, water systems, and similar standards, requirements, and plans. All applications requiring a pre-application meeting per Section 307 of this Ordinance shall provide a sketch plan with the form requesting a pre-application meeting. The sketch plan shall include:~~.~~

a. Property dimensions on all sides of proposed or existing lots

b. North arrow and scale

c. Proposed driveways and easements

d. Adjacent street names

e. Proposed disturbance area and grading limits

f. Location and setbacks of all existing/proposed structures

g. Square footage of existing/proposed structures

h. Building height of existing/proposed structures

i. Location of existing/proposed septic

~~1.~~j. Adjacent properties zoning/use

2. The Zoning Administrator ~~upon the request of the Planning and Zoning Commission,~~ may require that the developer prepare and submit a Master Development Plan (MDP) where:

a. The tract is sufficiently large to comprise an entire neighborhood;

b. T~~t~~he tract proposed for platting is only a portion of a larger land holding of the developer;

~~a.~~c. T~~t~~he tract is a part of a larger land area of which the development is complicated by unusual topography and land use.

~~2.~~3. ~~Preparation:~~ The ~~Master Development Plan~~MDP shall be prepared to scale and accuracy commensurate with its purpose, and, in addition to the required elements of the sketch plan, shall include:

a. General Street pattern of major arterial and collector streets.

b. Indication of single- family and multi-family residential areas and indication of general lot size and number of lots per acre anticipated.

c. General location and size of school sites, parks, or other public areas.

d. Location of shopping centers and other non-residential proposed land uses, and indicating their proposed use.

e. Methods proposed for sewage disposal, water supply, and storm drainage.

f. An indication of the areas to be developed in accordance with a planned development schedule.

~~3.~~4. Approval: Upon acceptance of the general design approach by the Zoning Administrator, the ~~Master Development Plan (~~MDP~~)~~ shall be submitted to the Planning and Zoning Commission for its consideration. ~~-~~If general approval and notice to proceed with the platting process is given, notice to that effect shall be recorded in the minutes of the Planning and Zoning Commission meeting and a copy of said minutes transmitted to the subdivider and ~~his~~ their engineer. ~~-~~If a development is to take place in several parts, the MDP should be submitted as supporting data for each part.

~~1. Preliminary Plat and Engineering Drawings. The subdivider shall cause to be prepared a preliminary plat of the proposed subdivision and other exhibits as specified herein Section 703.B. The Zoning Administrator shall review the preliminary plat and submit its recommendations to the Planning and Zoning Commission as specified herein.~~

~~2. Final Plat and Recording. The subdivider shall cause to be prepared a final plat as specified in Section 403, which shall conform substantially to the preliminary plat as approved, and if desired by the subdivider, it may constitute only that portion of the approved preliminary plat which is proposed to be recorded and developed at the time, provided, however, that such portions conform to all requirements of these regulations. The approved and executed copy will be recorded in Yavapai County Recorder's office after full compliance with the regulations, and one copy will be filed in the Planning and Zoning Commission's office and one with the Town Engineer.~~

~~3. Building Permits and Certificates of Occupancy:~~

~~a. Building Permits. No Building shall be erected, or shall a building permit be issued for a building, unless the street giving access to the lot upon which such a building is proposed to be placed shall have been properly improved as required in Section 601(C).~~

~~b. Certificates of Occupancy. No certificate of occupancy shall be issued for any building unless all of the requirements of these regulations and any and all requirements of any other regulatory code, ordinance or regulation have been met and complied with.~~

SECTION 703. SPECIFICATIONS FOR PLANS AND PLATS

A. PRELIMINARY PLAT AND ENGINEERING DRAWINGS:

1. Preliminary Plat to be Submitted: After the pre-application conference and general approval of the Sketch Plan and/or Master Development Plan, if required, the subdivider shall ~~cause to be~~ prepare~~d~~ a preliminary plat of the proposed subdivision and other exhibits as ~~hereinafter~~ specified by this Ordinance. ~~,~~ Copies of the preliminary plat and all required supplementary material, the number to be determined by the Zoning Administrator, ~~and~~ shall be submitted to the Zoning Administrator, who shall determine the completeness of the application within fourteen (14) days of submission. An application that is deemed complete shall be circulated for departmental review. If the application is incomplete, the Zoning Administrator shall provide the applicant with written notice of the specific deficiencies in the application. ~~a preliminary plat application with twelve (12) copies of the preliminary plat and all required supplementary material, at least fourteen (14) days prior to the meeting at which it is to be considered.~~

2. Departmental Review of Preliminary Plat: The Zoning Administrator shall refer copies of the preliminary plat to the following reviewing offices, who shall make known their recommendations in writing addressed to the Zoning Administrator.

   a. ~~(1) the~~ Town Engineer,

   b. County Highway Department (when plat abuts a county highway)

   c. ~~(2)~~ County ~~the~~ Health Department,

   d. Arizona Department of Transportation (ADOT) (when plat abuts a state highway)

   e. Fire Chief, and

   f. ~~(3)~~ A~~a~~ll interested utilities ~~y companies~~ and agencies.

   These entities shall review the plat for matters within their jurisdiction and promptly report their recommendations to the Zoning Administrator, who shall check the plat for conformity to these regulations, ~~,~~ add their own written comments and recommendations, and provide these comments to the applicant to be addressed in a resubmittal of the application until the Zoning Administrator determines that the substantive review of the application is complete. ~~, and shall submit the recommendations to the Planning and Zoning Commission at a meeting thereof not later than thirty-five (35) days from receipt of the preliminary plat application.~~

   The subdivider's engineer may act as agent.

~~2.~~3. Planning and Zoning Commission Findings: After substantive review of the preliminary plat application has been completed~~Within Forty (40) days after the submission of a preliminary plat and other material submitted in conformity to these regulations~~, and the Zoning Administrator has forwarded the application to the Planning and Zoning Commission, the Commission shall hold a public hearing and express its approval, ~~and~~ any conditions of approval, ~~if any,~~ or its disapproval, and its reasons therefor.

~~3.~~4. The action of the Planning and Zoning Commission, including any conditions, shall be noted on two (2) copies of the preliminary plat ~~and conditions determined shall be referenced and attached thereto~~. One (1) copy shall be returned to the subdivider, and the other shall be retained in the Planning and Zoning Commission's records.

~~4.~~5. Approval or conditional approval of the preliminary plat shall not constitute approval of the final plat. Rather it shall be deemed an expression of approval to the layout submitted on the preliminary plat as a guide to the preparation of the final plat. The final plat shall be submitted for approval by~~of~~ the Planning and Zoning Commission and the Town Council upon fulfillment of the requirements of these regulations and the conditions of the conditional preliminary plat approval, if any.

5.6. Preliminary Plat Requirements: Preliminary plat shall be submitted on one ore more sheets of not larger than thirty-six inches by forty-two inches (36" x 42") at a scale not greater than two hundred feet (200') to an inch and preferablye one inch equal to one hundred feet (100') to the inch.

Preliminary plats of subdivisions outside the Town, but within a three (3) mile radius of the Town will be submitted by the Yavapai County Planning and Zoning Commission to the Town Planning and Zoning Commission for recommendation, pursuant to ARS 9-474 as amended.

All preliminary plats shall contain the following information:

a. Proposed name of subdivision and its location by section, township, and range; small--scale vicinity map showing relative location of the plat; reference by dimension and bearing to section corners; and subdivision boundaries clearly identified.

b. Name, address, and phone number of landowner (and subdivider, if not the same).

c. Name, address, and phone number of engineer, surveyor, landscape architect, or land planner preparing the plat, including registration number if registered.

d. Scale, north point, and date of preparation, including dates of any subsequent revisions.

e. Topography by contours relating to USGS survey datum or other datum approved in writing by the County Engineer, to be shown on the same map as the proposed subdivision layout. Location and elevation of the benchmark used should also be shown on the plat. -Acceptable contour interval: grades up to five percent (5%), two feet (2'); five percent (5%) to 10 percent (10%) grades, five feet (5'); grades over ten percent (10%), ten feet (10').

f. Location by survey of streams, washes, canals, irrigation laterals, private ditches, culverts, lakes, or other water features, including direction of flow and water level elevations, and location and extent of areas subject to inundation and whether such inundation is frequent, periodic, or occasional.

g. Location, widths, and names of all existing streets, pathways and improvements therein; railroads; utility easements or rights-of-way, including any existing facilities therein; public areas, all existing structures, with an indication of whether or not they are to remain; and municipal corporation lines within or adjacent to the tract, and to be accompanied with a Preliminary Title Report.

h. Name, book, and page number of any recorded subdivisions within or having a common boundary with the tract, or notation "unsubdivided" where appropriate.

i. Location, width, and names of proposed streets, alleys, drainage ways, crosswalks, and easements, including all connections to adjoining platted or unplatted tracts.

j. Lot Layout, including minimum building setback lines related to all streets; typical lot dimensions (scaled); dimensions of all corner lots and lots on curvilinear sections of street; each lot numbered individually

k. Designation of all land to be dedicated or reserved for public or semi-public use, with use indicated.

l. Reference by note to the source of proposed electricity, gas, and telephone service, and whether such service will be underground.

m. If Plat includes land for which multi-family, commercial, or industrial use is proposed, such areas shall be clearly designated together with existing zoning classification, present district boundary lines and status of any pending zoning change.

n. Preliminary draft of proposed deed restrictions, including provisions for use and maintenance of commonly-owned facilities, if any.

o. Sewage disposal: It shall be the responsibility of the subdivider to furnish the County Health Department such evidence as that Department may require for its satisfaction as to the design and operation of sanitary sewage facilities proposed. -A statement as to the type of facilities proposed shall appear on the preliminary plat.

p. Subdivisions Utilizing Septic Tanks: Where the proposed sewage disposal system will be by individual lot septic tanks, percolation tests and test boring logs in accordance with the requirements of the County Health Department shall be taken on the proposed subdivision and submitted with the preliminary plat.

q. Water Supply: It shall be the responsibility of the subdivider to furnish the County Health Department such evidence as that Department may require for its satisfaction as to the facilities for supplying domestic water. -A statement as to the type of facilities proposed shall appear on the preliminary plat.

r. Storm Water Disposal: Preliminary layout of proposed system, location and invert elevation of outlet, and statement as to extent of improvements proposed, if any.

B. FINAL PLAT, ENGINEERING DRAWINGS, AND RECORDING

The final plat stage includes submittal, review, and approval of the final plat by the Town Council and recording of the plat with the County Recorder. Application for approval of the final plat is made to the Zoning Administrator.

1. Final Plat to be Submitted: A f~~F~~inal plat shall be submitted to the Zoning Administrator within one ~~hundred eighty~~ (1~~8~~0) yeardays of preliminary plat approval. The Zoning Administrator shall determine the completeness of the application within fourteen (14) days of submission. An application that is deemed complete shall be circulated for departmental review. If the application is incomplete, the Zoning Administrator shall provide the applicant with written notice of the specific deficiencies in the application. ~~The final plat shall be filed at least twenty (20) working days prior to the regular meeting at which the applicant desires to be heart. Upon receipt of the final plat, the department shall immediately verifycheck its for completeness. If the final plat is innot complete, it will be immediately returned to the subdivider.~~

   The final plat shall confoirm to the approved preliminary plat and any stipulation attached thereto by the Zoning Administrator or Planning and Zoning Commission. C~~Ten (10) c~~opies of such final plat, the number to be determined by the Zoning Administrator, shall be filed with the Department, including one (1) electronic and one (1) hard-copy original ~~in accordance with 402.05~~, which shall bear the original signatures of the owner or owners and be duly acknowledged~~, and one 18" x 24" clear film positive reduced to 1" = 400' scale~~. -The final plat shall be submitted, along with an application form and~~,~~ the final plat filing fee, to the Zoning Administrator.

2. Departmental Review of Final Plat: Departmental Review of Final Plats shall be in accordance with Section 703.A.2, except that:~~The Zoning Administrator shall refer copies of the final plat to the following reviewing offices who shall make known their recommendations in writing addressed to e Planning and Zoning Commission.~~

   - ~~City Engineer~~

     ~~County Highway Department (when plat abuts a county highway)~~

     ~~County Health Department~~

     ~~State Highway Department (when plat abuts a state highway)~~

     ~~All interested utilities and agencies (including the Soil Conservation District)~~

     ~~The Zoning Administrator shall assemble the recommendations of these various reviewing offices, prepare a concise summary of these recommendations and submit said summary~~

~~together with the reviewer's recommendations at the regular meeting of the Town Council at which the applicant desires to be heard.~~

If additional information or changes are recommended by any of the reviewing departments, a revised final plat must be submitted to the Zoning Administrator until all reviewing departments and agencies are satisfied. Resubmittals of a final plat shall not require a separate filing fee. ~~-~~Referral and scheduling of a revised final plat shall be the same as that required for the original final plat. ~~Plats not in conformance with the requirements of this Ordinance will not be scheduled for consideration by the Planning and Zoning Commission or Town Council.~~

If the final plat is complete but the time limit has expired or it is not in conformance with the preliminary plat or stipulations attached thereto, it will either be returned to the subdivider for compliance or be referred to the Planning and Zoning Commission for review and recommendation before being forwarded to the Town Council.

If a subdivision is predicated upon a change of zoning, the final plat will not be approved ~~schedule for consideration~~ until the necessary zoning has been adopted by the Town Council.

3. Planning and Zoning Commission Findings: Once a final plat has been accepted by the reviewing departments and the Zoning Administrator, it shall be referred to the Planning and Zoning Commission, which shall hold a public hearing and recommend approval, recommend approval with conditions, or recommend denial and the reasons therefor. The Commission shall render its decision in the form of a written recommendation to the Council, which may be via a request for Council action or via the transmission of the Commission meeting minutes to Council.

4. Town Council Approval: The Town Council shall hold a public hearing for all final plats proposed within the Town of Jerome, and shall either approve, approve with conditions, or deny an application for a final plat.

When the final plat has been approved by the Town Council, the Mayor shall be authorized to sign the plat for recording at the time that all ~~of the~~ Subdivision Improvement Requirements of Section 710~~Chapter 6~~ of this Ordinance~~ese regulations~~ have been met. ~~-~~After the Town Council's approval, the plat shall be assigned to the Zoning Administrator who~~ich~~ shall transfer the recording fee and approved final plat to the County Recorder's Office for recording after the improvement requirements and stipulations have been met. ~~-~~The subdivider will be notified of the date book and page number of the official recording.

If the Town Council disapproves the final plat, it shall express the reasons therefor within the minutes of the meeting of which one copy shall be attached to the plat and returned to the subdivider.

The subdivider or ~~his~~ their agent ~~and his~~ , engineer or land surveyor shall be present at the meeting set for the date of approval.

~~4.~~5. Legal Survey: The final plat shall be based on a survey of the subdivision and shall conform to the approved preliminary plat and any stipulations attached thereto by the Planning and Zoning Commission. The plat shall show the title or name under which the subdivision is to be recorded, with the name of the engineer or surveyor platting the tract.

The engineer or surveyor shall in every case have a Certificate from the Arizona State Board of Registration for Engineers and Land Surveyors. The name or title of the subdivision shall not duplicate the name of any existing subdivision.

~~5.~~6. Final Plat Requirements: The record plat shall be drawn on plastic or other non-shrinking material on a sheet not exceeding thirty-six inches by forty-two inches (36" x 42") in size. ~~-~~Copies of the record plat shall be reproduced in the form of blueline, or blackline prints on a white background. The plat shall be drawn to an accurate scale of not more than two hundred feet (200') to an inch and preferably one hundred feet (100') to an inch.

The final plat shall contain the following information:

a. A Title, which includes the name of the subdivision and its location by section, township, range and county.

b. Name, registration number and seal of the registered professional engineer or land surveyor responsible for preparing the plat.

c. Scale (written and graphic), north point and date of plat preparation.

d. Location and description of cardinal points to which all dimensions, angles, bearing and similar data on the plat shall be referenced.

e. Any excepted parcel(s) within the plat boundary, accurately described by bearings and distances. Proper street and alley dedications adjacent to any proposed tracts or excepted parcels shall be provided by the subdivider by inclusion within the plat or by separate dedication noted on the plat.

f. Boundaries of the tract to be subdivided fully balanced and closed, showing all bearing and distances determined by an accurate survey in the field. All dimensions shall be expressed in feet and decimals thereof to the hundredth. No plat showing plus or minus distances will be approved. Corners of the plat should be noted and monuments found or set should be indicated; each of the two (2) corners of the subdivision traverse shall be tied by course and distance to separate section corners or quarter-section corners or other survey monuments as may be acceptable to the Town Engineer. The Planning and Zoning Commission may make such office and field checks as may be necessary to assure the correctness of the plat and may require the owner of the subdivision to pay for such checking.

g. Names, centerlines, right-of-way lines, courses, lengths and widths of all public streets, pathways, alleys, crosswalks and utility easements; radii, points of tangency and central angles of all curvilinear streets and alleys, and radii of all rounded street line intersections.

h. All drainage-ways shall be shown on the plat. The rights-of-way of all major drainage-ways, as designated by the Town Engineer, shall be dedicated to the public.

i. The location, width and use of all public or private utility easements shall be noted. All private utility easements shall be marked private easements.

j. Location and dimensions of all lots shall be shown. All minimum setback lines shall also be located and dimensioned.

k. All lots shall be numbered consecutively throughout the plat. Other Parcels, “tracts” and private parks shall be so designated, lettered or names and clearly dimensioned.

l. The accurate outline of all property which is offered for dedication for public use with the purpose indicated thereon, and all property that may be reserved by deed covenant for the common use of the property owners in the subdivision.

m. Name, book and page number of adjacent recorded subdivision, with location of existing adjacent lots, easements and rights-of-way, shown, or notation “unsubdivided” where appropriate. All proposed conditions should be graphically differentiated from existing conditions on adjacent properties and on excepted parcels within the plat.

n. The original and one copy of any private deed restrictions to be imposed upon the plat or any part or parts thereof shall be submitted with the final plat. Said deed restrictions must be in proper form to be recorded as a separate instrument. Space for cross-referencing to the deed restrictions shall be provided on the plat, to be completed by the County Recorder, e.g. “See Restrictions Recorded in Docket _____, Page _____, Yavapai County Recorder’s Office.”

o. Dedications: Statement of dedication of all roads, streets, alleys, crosswalks, drainage ways, and other easements for public uses, as shown on the plat, by the person holding title by

deed to the lands, by persons holding any other title of record, by persons holding title as vendees under land contract, and by wives of said parties. If lands dedicated are mortgages, the mortgagee shall also sign the plat. Dedication shall include a written description of the tract. Signatures must be witnessed. If the plat contains private streets, the public shall be reserved the right to install and maintain utilities in the street and the right to maintain and control drainage and flood diversion channel.

p. Acknowledgement of Dedication: Execution of dedication, acknowledged and certified by a notary public.

q. Space for approval by the Town Council under the signature of the Mayor and attested by the Town Clerk.

SECTION 704. HILLSIDE SUBDIVISIONS

A. PURPOSE

Planning, platting and development of hillside subdivisions involve special problems and require special handling by the subdivider and ~~his~~ their engineer, and by the Planning and Zoning Commission, staff, and reviewing officials. Hillside problems include the preservation of scenic beauty for the benefit of the general public, safe construction of public improvements commensurate with lower density and lesser public use, and safe construction of private improvements related to sewage disposal, water supply, storm drainage, and foundation bearing.

B. LOT WIDTH AND AREA

Lot width and area shall be closely related to the terrain, drainage, percolation factors, or construction of sanitary sewers, with emphasis placed on the selection of homesites.

1. Existing topography shown by suitable contour interval with location of major and minor washes. A separate sheet showing proposed contours may also be required if extensive regrading is proposed.
2. Road profiles and cross-sections may be required at the discretion of the Town Engineer.
3. Percolation tests and test boring logs in accordance with the requirements of the County Health Department should be taken at the proposed subdivision prior to the submittal of the preliminary plat.

C. PLAT PROCESSING TIME

Due to problems requiring special field and office review by the County Health Department, the Town Engineer, and the Staff, subdividers should expect processing time for hillside plats to exceed that otherwise required for normal plats.

D. HILLSIDE SUBDIVISION DESIGN

Special problems of hillside subdivision design are discussed under ~~the~~ Section 709 Design S~~tandardsection~~.

SECTION 705. REVISIONS OF PLATS OR REPLATS

A. Any Division of a lot in a recorded subdivision into five (5) or more parcels, or any changes in lot lines involving five (5) or more adjoining lots in a recorded subdivision, but creating no new street, may be processed in accordance with Final Plat Procedures on these Subdivision Regulations, after a Pre-Application Conference with the Zoning Administrator.

B. Any replat involving dedication or abandonment of land for a public street shall comply with all procedures set forth in these requirements, Sections 7406 and 7407.

C. If abandonment of a street, pathway, alley or public utility easement in a previously recorded subdivision is necessary, the replat of that area shall not be forwarded to the Town Council for final action until abandonment proceedings are completed and recording data noted on the final plat.

SECTION 706. ABANDONMENT OF A RECORDED SUBDIVISION OR REVERSION TO ACREAGE

A. If no lots in the subdivision, for which a final map has been approved and recorded, have been sold within three (3) years from the date of recordation, or if none of the improvements have been made within two (2) years from the date of approval, the Town Council may on its own motion hold a public hearing after notice, to determine whether the approval of such final map should be revoked. Such revocation shall be effective upon recordation of a certified copy of such resolution; and thereupon, all streets, rights of way, and easements dedicated or offered for dedication by such map shall be of no further force or effect.

B. Pursuant to provisions of Title 18, Chapter 2, Article 1, Section 18-201, and Chapter 5, Article 1, Sections 18-501-508, ARS, the abandonment of all or part of a recorded subdivision may be initiated by written petition to the Town Council, said petition to be signed by teno (10) or more owners of real property in Jerome, requesting abandonment of all streets, alleys and easements within said subdivision and giving the legal description and recording information thereof.

C. Applications or petitions for abandonment are filed with the Clerk of the Town Council and referred for recommendation to the Zoning Administrator, Town Engineer, and utility companies concerned.

D. Such abandonment may necessitate consideration for rezoning.

E. Any action considered by the Council relating to revocation of all or part of a subdivision whether plots or lots and rights-of-way shall be referred to the Planning and Zoning Commission for evaluation for the following:

   1. Conformancerrelations with the Town's General Plan.
   2. Correlations with proposed development in adjacent areas.
   3. Recommendation as to whether or not zoning changes should accompany such action.
   4. Effect of such action on existing development in areas affected by proposed reversion or abandonment.

F. Any other actions applicable to the above process and permitted by State Laws are permissible.

G. Requisite actions under Article 1, Chapter 520, Title 18, Arizona Revised Statutes to abandon the streets and easements should be carried on separately and simultaneously with any procedure to abandon a subdivision or revert it to acreage.

SECTION 707. AMENDED SUBDIVISION~~S~~ MAPS

A. Any map of a subdivision that has been filed for record may be amended to correct an error in any course or distance or other necessary item that was omitted therefrom, or to correct a drafting, graphic, technical or similar type error; by the filing for record of an amended map of said subdivision. The County Recorder shall examine such amended map and if such examination discloses that the only changes on the amended map are changes above authorized, he shall certify this to be a fact over his signature on the amended map. Thereafter, the amended map shall be entitled to be recorded in the office of the Recorder in which the original subdivision map was recorded. Such map shall be marked "AMENDED MAP OF _____". Subsequently, if more than one amended map is necessary, the successive maps shall be titles "SECOND AMENDED MAP OF _____" and follow in numerical sequence order. The use of the terminology of "Amended Map" shall not be used to change or vary or add any lot lines, streets, or easements or statements that were not contained on the approved preliminary map, since such actions necessitate re-processing of the plat.

SECTION 708. SUBDIVISIONS WITHIN THREE (3) MILES OF TOWN

~~A.~~ In accordance with Arizona Revised Statutes, Section 9-474 as amended: ~~The subdividers of land outside the Town but within three (3) miles of the corporate limits shall submit all plats to the Town of Jerome for review and , comment and approval as follows:~~

~~B.~~A. When the owner of land, the whole or part of which is an unincorporated area within three (3) miles from the corporate limits of the Town of Jerome, desires to subdivide the land into lots for the purpose of selling it by reference to a map or plat they shall first given written notice to the Town of their~~his~~ intention to subdivide the land, naming and describing the land so that it may be identified upon the ground, and shall submit to the Town a tentative plat of the land showing the manner in which he desires to subdivide the land.

~~C.~~B. If the Town desires that the streets or alleys of the tract conform with the projected streets or alleys f the Town of Jerome, or of an adopted plan of the Town of Jerome, then the Town may, at its cost, project the lines of its streets and alleys to the nearest outer boundary lines of the subdivision and thereon mark the same, and shall supply the owner with the courses of the lines.

~~D.~~C. The Town of Jerome may also submit to the owner a written report recommending changes in the submitted plat of the location or dimension of streets, pathways, alleys, parks, easement for rights-of-way or property intended to be devoted to the use of the public. ~~-~~ One copy of the report shall be delivered to the Board of Supervisors of the County.

D. If the report is given to the owner, or the lines are so marked and the courses given the owner within thirty (30) days from the date of service of notice of intention to the Town, then the owner shall cause the land to be subdivided into blocks, lots, streets, alleys, parks and parkways, so as reasonably to conform to the report and the projected ~~street~~ lines and courses thereof, and shall prepare in duplicate an accurate map or plat thereof on cloth, drawn and attested by a registered civil engineer or registered land surveyor from their survey of the ground. The engineer or registered land surveyor shall, in making the surveys, leave sufficient permanent monuments so that another surveyor or engineer may retrace their work. The nature and location of the monuments shall be plainly shown on the plat. ~~-~~

E. The plat shall particularly set forth and describe:

1. Parcels of ground within the tract or subdivision to be used for public purposes or offered for dedication for public uses, and their dimensions, boundaries and courses.
2. Either by number or letter, lots intended for sale, or reserved for private use, and their dimensions, boundaries and courses.
3. The location of the subdivision into lots with reference to adjacent subdivisions, the maps or plats of which have been previously recorded, or if none, then with reference to corners of a United States survey, or if on land unsurveyed by the United States, then to some prominent artificial monument established for such purpose.

SECTION 709. DESIGN STANDARDS

A. GENERAL

1. The Planning and Zoning Commission shall insure that appropriate provisions are made for the harmonious development of the Town by requiring (1) the coordination of streets within subdivisions with existing or planned streets or with other features of the General~~Comprehensive~~ Plan, (2) a regulation of population density and traffic volume which will create conditions favorable to public health, safety and convenience, and by (3) recommending adequate spaces for public use (such as for parks, schools, recreational areas, etc.).
2. Adequate access shall be provided from an existing public road to land being subdivided. Approval of such access shall be a condition of approval of the plat by the Commission and Council.
3. In all subdivisions, it is urged that due regard be shown for all natural features such as trees, water courses, historical and archaeological sites, and similar community assets which, if preserved, will add attractiveness and value to the property and community.
4. Portions of property within the ownership of the subdivider, contiguous to the subdivided property shall not be excluded from within the boundaries of a subdivision when needed or required for any traffic, drainage or flood control facility pertinent to said subdivision.
5. Portions of property within the ownership of the subdivider, contiguous to the subdivided property but not included within the boundaries of the subdivision, shall be of such size or shape that they could be used for some purpose compatible to surrounding development and meet the specifications of other Town regulations.
6. Separate parcels omitted from a preliminary plat, that form lots or building sites of less than five (5) acres each, or that could be part of this development by extending proposed roads shall be included in the proposed plat.
7. The design of those elements of a subdivision involving structural matters, location and design and building of roads, pathways, drainage provisions, water supply and sewage disposal shall be made by an engineer registered in the State of Arizona and qualified to specify the standards for such design or by an assistant under their~~his~~ direction and supervision.
8. A supplementary set of standards may be adopted by the Commission and approved by the Council on each item as described. These standards shall be separate from this Ordinance and shall be developed by the Town Engineer. They may be revised whenever environmental circumstances or technological improvements necessitate or justify such changes.
9. It is the responsibility of the developer to comply with these regulations. ~~-~~At any time in the processing of a subdivision tract that non-compliance is detected notification by certified or registered mail of said non-compliance shall be transmitted to the developer. If compliance is made by the developer processing shall proceed from date of compliance as if the non-compliance had not existed. ~~-~~If compliance is not made within thirty (30) days of the mailing of the certified letter, processing shall be terminated. Once processing is terminated, a tract must be resubmitted.

B. SUITABILITY OF THE LAND

1. The Planning and Z~~z~~oning Commission shall not approve the division of land as submitted if, from adequate investigations, it has determined that said land is not suitable for the kind of development proposed due to such factors as flooding, bad drainage, steep slopes, rock formations, soils or design features likely to be harmful to the safety, welfare and general health of the future residents, unless reasonable corrections acceptable to the Commission are submitted by the developer.

C. WATER COURSES

1. In the event that the subdivision is traversed by or is contingent to lakes, streams, or other bodies of water, the subdivider shall provide a right-of-way for storm drainage conforming substantially with the line of such natural water course, channel, stream, or creek, or provide an acceptable realignment of said water course.

D. STREETS, GENERAL

2. The arrangement, character, extent, grade, width, and location of all streets shall conform to the General~~Comprehensive~~ Plan or the preliminary plans of said Commission.
3. Where such is not shown on the General~~Comprehensive~~ Plan or preliminary plans, the arrangement of streets shall provide continuation or appropriate projection of existing major streets in surrounding areas. ~~-~~All center lines shall be contiguous territory. ~~-~~In cases where straight continuations are not physically possible, such center lines may be continued by curves.
4. The minimum width of right-of-way, measured from lot line to lot line, shall be as prescribed by the Town Engineer, the General~~Comprehensive~~ Plan, and these regulations. ~~-~~Proposed streets shall extend or project existing streets at their same or greater width, but never at a width less than that prescribed by established standards.
5. All streets and highways shall be graded, surfaced, and improved to cross sections and grades approved by the Town Engineer and as established by these regulations. ~~-~~The subdivider shall improve the extension of all subdivision streets and other public ways ~~,~~ to the intercepting shoulder line of any County road, Town street, or State highway.

   Grades given are the maximum allowed for certain short-range distances and do not imply permission for~~of~~ an extensive distance at maximum grade.
6. Structures or culverts shall be installed as deemed necessary by the Town Engineer for drainage, access, and public safety. ~~-~~ Such structures and culverts are to be placed to grades and shall be of a design and size approved by the Town Engineer. ~~-~~Adequate drainage of the subdivision public ways shall be provided by means of said structures or culverts and by other approved means, in accordance with the engineering standards adopted by the Town Engineer.
7. All roads developed or improved in conjunction with subdividing shall either be:
   a. Built to Town standards, dedicated by the map and accepted by the Council.
   b. Built to Town Council standards, dedicated by the map and approved by the Council in conjunction with providing a Performance Bond of Assurance of Completion Bond.
   c. Built and offered for dedication by the subdivider, refused by the Council, but approved as private roads with adequate assurances of upkeep.
8. Adequate provisions shall be made in the design of subdivisions for access to each lot or parcel, and for access to adjacent properties.
9. Half roads or partial width rights-of-way should only be approved as partial major roads along a section line where no alternative design exists, or where said partial rights-of-way would require the dedication of additional contiguous rights-of-way to make it full width, provided that that developer or their~~his~~ representative shall include evidence that the additional right-of-way is available or is permanently reserved for future road purposes. ~~-~~ Half roads should also be accepted where they are a portion of the road system approved in the General~~Comprehensive~~ Plan.
10. When a tract fronts on an arterial road, the Commission may require such lots to have reverse frontage.
11. Provisions shall be made for railroad and other public or private utility crossing necessary to provide access to or circulation within the proposed subdivision, including the obtaining of all

necessary permits from the public or private utilities involved, and any regulatory agencies having jurisdiction. The cost of such crossings shall not be assumed by the Town.

12. Minor Residential Streets: minor residential streets shall be designed to provide proper circulation of local traffic.

13. Dead-End Streets or Cul-de-Sacs:

    a. Minor terminal streets designed to have one end permanently closed shall not be more than six (6) times the minimum lot width nor one thousand three hundred twenty feet (1,320') long unless necessitated by topography. They shall be provided at the closed end with a circular turn-around or a cul-de-sac having a right-of-way radius, or at least forty-five feet (45').

    b. Where, in the opinion of the Commission, it is desirable to provide street access to adjoining properties, proposed streets shall be extended by dedication to the boundary of such property. Such dead-end streets shall be provided with a temporary turn-around having a roadway radius of at least forty-five feets (45').

14. Intersections:

    a. Street intersections shall be as nearly at right angles as possible, and no intersection shall be less than sixty (60) degrees.

    b. Property line radii at street intersections shall not be less than twenty-fgive feet (25'); the Town Engineer may require a greater curb radius.

    c. Whenever necessary to permit the construction of a curb having a desirable radius without curtailing the sidewalk at a street corner to less than normal width, the property line at such a corner shall be rounded or otherwise set back sufficiently to permit such construction.

15. Jogs in Minor Streets: Street jogbs with centerline offset of less than one hundred thirty-five feet (135') shall not be approved.

16. Street Names: Proposed streets which are obviously in alignment with other existing names or numbered streets in that vicinity, as determined by the Zoning Administrator, shall be given the designation of said existing street. In no case shall the name for proposed streets duplicate those of existing streets within the same planning area, except as aforementioned, irrespective of the use of such varying suffixes as street, avenue, road, boulevard, drive, place, court, or other designation. Through its index of street names and numbers, the Commission can assist the subdivider in avoiding such duplications.

17. Street Standards and Improvements: Unless specifically requested by the subdivider and/or designated by the Planning and Zoning Commission or Town Council and agreed to by both parties, the following general street standards shall apply:

(see following page for general street standards)

Classification	Min. R/W	Street Section	Paved Section	General Thickness	Type Curbs	Maximum Grade	Minimum Curve Radius
Large Lot Residential (1-acre lots or larger)	50’	28’	24’	As Req’d by Town Engineer	W/O Curb With Wedge Curb	12%	100’
Residential	50’	36’	32’	As Req’d by Town Engineer	*Rolled or Vertical	12%	100’
Residential Collector	60’	42’	40’	As Req’d by Town Engineer	Vertical	8%	200’
Major Urban Collector	80’	58’	48’	As Req’d by Town Engineer	Vertical	6%	300’
Major Arterials (Rural Areas)	110’	28’	24’	As Req’d by Town Engineer	W/O Curb With Wedge Curb	6%	500’
Major Arterial (Urban Areas)	110’	2-40’ Divided	60’	As Req’d by Town Engineer	Vertical	6%	500’
Cul-de-sacs	45’ Radius	38’ Radius to back of curb		Roll	Rolled or Vertical		

*Except that for subdivisions wherein all lots are 18,000 sq. ft. or larger and haveing a minimum 100-foot frontages, redwood headers are permitted to protect paving at shoulders in lieu of concrete curbs; lots fronting on a cul-de-sac within such a subdivision may be excepted from the 100-foot frontage requirement.

Other types to be approved by the Zoning Administrator & Town Engineer.

All improvements to be installed in accordance with Town Engineering Standards.

18. Alleys: Alleys shall be provided to the rear of all lots used for business purposes, as deemed necessary, but will not be required for residential areas. ~~-~~Alleys may be permitted where a subdivider can produce evidence satisfactory to the Commission of the desirability of such provisions.

19. Sidewalks: Concrete sidewalks shall be constructed along at least one side of every street shown on the plat in accordance with applicable standard specifications of the Town. Minimum width shall be four feet (4'); except sidewalks shall not be required in subdivisions with all lots containing over eighteen thousand (18,000) square feet each.

20. Pathways may be constructed at locations other than adjacent to streets and may eliminate the need for~~of~~ sidewalks when approved by the Planning and Zoning Commission.

21. Block Design: The length, width, and shape of blocks shall be determined with due regard to provisions for adequate building sites, the zoning requirements as to lot area and dimensions, limitations and opportunities of topography, and needs for convenient access, ~~and~~ circulation, control, and safety to streets and pedestrian traffic.

    a. Length: Block shall not be more than one thousand three hundred twenty feet (1,320) in length except as the Commission considers necessary to secure efficient use of land or as a desired feature of street design.

       Any block having a length of six~~e~~ hundred feet (600') or greater may be required by the Planning and Zoning Commission to have provisions made for a pedestrian walk-through having a twelve-foot (12') right-of-way, when deemed essential for pedestrian circulation, access to schools, playgrounds, etc.

    b. Width: Blocks shall be wide enough to allow two (2) tiers of lots.

E. LOTS

1. Arrangement: The lot area, width, depth, shape, ~~and~~ orientation, and the minimum building setback lines shall be appropriate for the location of the subdivision, for the type of development and use contemplated, and shall conform to the zoning requirements and these regulations.
2. Insofar as practical, side lot lines shall be at right angles to straight street lines or radial to curved street lines. Each lot must front upon a public street or road or approved access.
3. Accessibility: Eachst lot shall be accessible to the street on which it fronts. ~~-~~Where necessary, lots shall be graded as a condition of approval of a final map to ~~ei~~nsure access to and adequate use of the property.
4. Minimum Size: The size, shape, and orientation of lots shall be such as the Commission deems appropriate. Each lot shall be suitable for the purpose for which it is intended and shall contain a usable building site. The area of a lot shall be deemed the area shown, exclusive of any area designed for road purposes or any easement for access or road purposes shown on the map.
5. Where lots are designed with minimum areas, corner lots shall be wider than minimum to provide adequate usable area, if necessary.
6. Large Tracts or Parcels: When the land is subdivided into larger than ordinary building lots, such parcels shall be arranged so as to allow for the opening of future streets and logical re-subdivision.
7. Lot Numbering:
   a. Each lot shall be designated by an ~~"~~Arabic numeral.
   b. If block designations are not used, numbering shall be in consecutive sequence within the block beginning with the number "1" or wherever lots have common side boundaries within a subdivision or within a block along each street and consecutive numbering shall follow from one block to another.
   c. When block designations are used, numbering shall be in consecutive sequence within each block area commencing with the number "1" for each block.
   d. Parcels and/or tracts shall be designated by capital letters and be designated in alphabetical sequence starting with the letter "A".

~~d.~~8. Lot line adjustments, lot ties, and lot combinations may be administratively approved by Town staff without a public hearing, subject to application and review procedures established by the Zoning Administrator.

F. REFUSE, SANITARY SEWAGE, AND WATER SYSTEMS

1. Where a public sanitary sewer system is reasonable accessible, the subdivider shall connect with such sewer and provide a connection to each lot.
2. A sewer collection and treatment system shall be provided as a condition of approval for any subdivision containing lots or parcels less than one acre in area.
3. When connection to a sanitary sewer system is not available for lots or parcels of one acre or more, septic tanks or other disposal methods may be permitted provided that a statement is submitted to the Planning and Zoning Commission by the County Health Officer or their~~his~~ authorized representative certifying that field investigation has shown that ground slopes and soil conditions will allow for satisfactory disposal by this method with the lot arrangement and size as shown on the subdivision map and that necessary drainage fields are either contained within the property or permitted by adjoining land owners.

4. In areas where public sanitary sewers are not reasonable accessible, but where the future owning agency agrees to effect temporary disposal of sewage, the subdivider shall plan and construct sewers within and for the subdivision for connection with a future public system.
5. Water mains connecting with the existing Town system shall be installed to serve each lot. All connections shall be subject to the approval of the Town Engineer.
6. Water mains and fire hydrants shall be installed to grades, location, design, and sizes on plans submitted by a registered engineer in the State of Arizona and approved by the Town Engineer and the Town Fire Department.
7. When connection to a Town water system is not available, the subdivider may provide service by establishment of a mutual water system in which case water mains and fire hydrants shall be installed to grades, location, design and sizes as submitted by a registered engineer in the State of Arizona and approve by the Town Engineer, and the source of supply developed and improved to the satisfaction of the County Health Officer or their~~his~~ representative so that the subdivision may be adequately supplied with water.
8. A Water system shall be provided as a condition of approval for any subdivision containing lots or parcels less than two (2) acres in area.
9. In the case of a subdivision with lots over two (2) acres in area, water supply may be from other than a community system. In this case sufficient evidence shall be submitted showing that potable water is available and can be obtained for all lots in the subdivision.
10. Minimum lot size may be affected by requirements of the County Health Department pertinent to water and sanitary sewage systems.
11. Public Sanitary Sewage and Water Systems: The requirements for development of public water supplies and sewage disposal systems shall not be less than those outlined by the Arizona State Health Department regulations and engineering criteria for such installations.
12. Refuse Disposal: The subdivider shall indicate the method of refuse collection and disposal.

G. EASEMENTS AND UTILITIES

1. Except where alleys are provided for that purpose, easements at least eight feet (8') in total width shall be provided along rear lot lines for poles, wires, conduits, sanitary sewers, gas mains, water mains, or for other utilities. Where necessary, additional easements shall be located along the side lot lines. Half or partial easements may only be approved where written commitment of dedication of necessary additional easements are on record. All easements shall be in accordance with those approved by the utility companies concerned.

H. MONUMENTS

1. Survey monuments acceptable by the Town Engineer shall be set for all points of reference on the outside boundary, at each lot corner and/or at all points of curvature or tangency of the subdivision.

   Whenever streets are improved to the extent that paving is included, survey monuments will be required at all street intersections and at the points of curvature and point of tangency of all curves. Monuments shall be set as approved by the Town Engineer.

I. PUBLIC REQUIREMENTS

1. During the design and layout of the subdivision, consideration shall be given to the requirements for public land and open spaces as specified in the General~~Comprehensive~~ Plan. The Planning and Zoning Commission may require certain lands to be reserved for public purposes in conformance with the General~~Comprehensive~~ plan as specified in these regulations.

J. AESTHETIC CONSIDERATIONS

1. The subdivider shall give consideration to preserving natural features in the design and layout of a subdivision. ~~-~~Lots and buildings should be oriented to make advantageous use of any views or natural features.

   All utility installations shall be located underground, except as exempted below, to assure that they do not detract from the design and amenity of the subdivision.

   Exemptions:

   a. Electric transmission lines over 600 Volts, and electric distribution feeder lines, as defined elsewhere herein, together with switchyards, substations and equipment.

   b. Temporary service facilities, such as facilities to furnish emergency service during an outage, facilities to provide service to construction sites, or other service of limited duration.

   c. Above ground appurtenance of underground utility systems with a total height not to exceed seven feet (7').

K. SPECIAL DEVELOPMENT SUBDIVISION

1. Modified standards and requirements of these regulations may be accepted by the Planning and Zoning Commission in the case of a plan and program for a neighbor unit, which in the judgement of the Planning and Zoning Commission provide adequate public recreation, light, air and service needs for the tract when fully developed and populated, and which also provides such covenants or other legal provisions as will assure conformity to an achievement of the General~~Comprehensive~~ Plan or zoning regulation.
2. When such a preliminary development is submitted for appraisal, it shall be accompanied by a petition for variance, as outlined in these regulations, setting out all deviations from standards as herein required, and explaining the reasons therefor.
3. Special development variations may include (1) Streets of less width than standard requirements, but with adequate provisions for off-street parking; (2) up to four (4) lots served by a common driveway where topographic conditions would justify such treatment; (3) up to four (4) buildings per site in a cluster of less than minimum lot area of a corresponding contiguous area plus the building site areas brings the total combination of building sites and common area to minimum area standards; and provisions are made that each lot owner has an equal undivided interest in the contiguous parcel and it is restricted to be used only for recreational purpose or to remain "open land"; (4) special common sanitation facilities.
4. Special development subdivisions shall be regulated as outlined in the zoning regulations.

L. SPECIAL DESIGN STANDARDS FOR HILLSIDE SUBDIVISIONS

1. Street grades shall not exceed twelve percent (12%)
2. Street grades of twelve percent (12%) shall have a maximum length of six hundred feet (600').
3. Minimum dedicated street right-of-way; to be justified by extreme cross-slope cut and fill areas or similar conditions.
4. "T" or "Y" type turning and backing areas may be substituted for circular turn-arounds.
5. "Panhandle", double frontage, and other unorthodox lots may be permitted so long as it can be adequately demonstrated that no such lot will adversely affect any other lot.
6. Private streets or drives serving not more than three (3) lots shall be permitted to a maximum length of three hundred feet (300').

SECTION 710.~~7~~ IMPROVEMENTS

A. GENERAL

The subdivider shall cause to be installed and constructed all street and road improvements, public utilities, survey monuments and markers and lot grading. All such improvements shall conform to the requirements of these regulations and all other applicable Town, County and State standards, specifications, codes and regulations. These standards may be obtained, among others, from the Town Clerk, Town Council, Zoning Administrator, County Health Department, County Highway Department.

1. The Subdivider shall be responsible for the cost of the following:
    a. Setting of survey monuments and markers.
    b. Street and road construction for all street improvements including base, grading, curbs, gutters, sidewalks, pavement, street trees, street name signs, culverts and bridges.
    c. Water and sewer line installations including fire hydrants and manholes.
    d. Required storm water system and/or other drainage improvements.
    e. All field density and related testing of base, subbase and other compacted backfill, gradation tests, concrete cylinder tests, asphalt tests and/or other related tests required to insure minimum standard requirements.
2. The subdivider shall be responsible for assuring the installation of the following, by negotiating with private companies, or by providing the cash for their installation when considered necessary by the Planning and Zoning Commission and the Town Council.
    a. Electric Lines.
    b. Streetlights.
    c. Gas Lines.
    d. Street Naming Signs.
    e. Telephone Lines.
3. Building permits will not be issued for new construction until all required street and utility improvements adjacent the property to be improved are installed, or assurance provided that they will be constructed by the subdivider.

B. ENGINEERING DRAWINGS

1. Within one hundred and twenty (120) days from final plat approval, the subdivider or developer shall submit to the Planning and Zoning Commission and the Board of Supervisors engineering drawings and construction plans for approval prior to the commencement of any work by the subdivider.

    At the time of submitting improvement plans and engineering drawings, the subdivider shall submit an estimate of the costs of constructing the required improvements to determine the amount of performance or surety guarantee to be required. The estimate shall specify the sources used as a basis to determine unit and project costs. The Planning and Zoning Commission and/or Board of Supervisors shall make any checks and revisions in the estimates as they deem necessary prior to approval.

    All required supplementary engineering studies or tests as required by the Planning and Zoning Commission and/or Board of Supervisors shall be approved prior to any construction activities by or for the subdivider.
2. All required engineering studies and exhibits shall be prepared by qualified and legally registered or certified engineers or engineering firms.
3. Contractors engaged by the subdivider to install required improvements shall be licensed and registered as required by State or local law.

4. A time construction schedule of installation of public improvements shall be submitted to and approved by the Planning and Zoning Commission and the Town Council prior to the commencement of any and all construction activities. The approved schedule shall be flexible enough to allow delays due to inclement weather or other unavoidable circumstances. In the event that construction at some time can no longer adhere to the approved schedule; the subdivider shall submit a revised schedule to the Planning and Zoning Commission and the Town Council for approval.
5. It may be desirable, during construction of improvements, for the subdivider to modify some standards and specifications of the approved engineering drawings. In this event, the subdivider shall, prior to making such modifications, submit a schedule of such modifications with reasons of necessity to the Planning and Zoning Commission and the Town Council for approval.
6. At the completion of all new construction relating to street or utility improvements the subdivider shall submit "as built drawings" to the Town Engineer prior to approval of the work by the Engineer.
7. The subdivider shall submit an estimate for the costs of constructing the required improvements to determine the amount of performance guarantee to be required. The estimate shall specify the sources used as a basis to determine unit and project costs. The Planning and Zoning Commission and/or Town Council shall make any checks and revisions in the estimates as they deem necessary prior to approval. The Town Engineer shall advise the Commission and Council of the adequacy of the estimate submitted.

C. REQUIRED IMPROVEMENTS

1. The subdivider shall cause to be set permanent survey monuments at locations approved by the Planning and Zoning Commission or Town Engineer, provided that ordinarily such monuments shall not be more than one thousand three hundred fee (1,320') nor less than six hundred sixty fee (660') apart; and, in addition, monuments of iron pipe, steel bars, or concrete, shall be set at all street intersections, at all tangent points as may be required by the Planning and Zoning Commission to make the retracing of the lines shown on the Town Official maps reasonable convenient.
2. The subdivider shall cause to be installed public water facilities including fire hydrants, public sanitary sewer systems, and a storm sewer system and/or other drainage improvements designed and constructed according to specifications approved by the Planning and Zoning Commission and the Town Council where required.
3. The subdivider shall cause to be installed and constructed according to specifications approved by the Planning and Zoning Commission and the Town Council, all street improvements including grading, surfacing, curb and gutter, sidewalks, street name signs, streetlights and telephone lines where required.

D. GUARANTEES OF PERFORMANCE

1. Before recording of a plat by the Town Council, the subdivider shall have dedicated all streets, pathways and alleys in the proposed subdivision together with sidewalks, curbs and gutters, in accordance with the requirements thatof the Planning and Zoning Commission may impose and specify as to grading, paving, width, location, drainage, courts, culverts, bridges, and other necessary requirement. The subdivider shall enter into a written agreement with the Town Council wherein the subdivider shall have deposited a performance bond in an amount established by the Town Council or have deposited with the Town of Jerome sufficient funds to cover the cost of such improvements. The amount of the performance bond orf the funds in escrow shall be determined from the cost estimates as specified in 7610.B02.7 (G) and/or 710.B.1(A) above, or letter of assurance from an acceptable financial institution that sufficient funds have been set aside for pledged to complete such improvements.

E. MINIMUM STANDARDS FOR SUBDIVISION STREET PAVING

1. Streets; Improvement Security: All streets covered by these regulations shall be paved, with curbs and gutters installed when required prior to the public sale of any land appurtenant to said streets. In lieu of the installation of paved streets, curbs and gutters by the subdivider, and in order to insure the proper installation of said paved streets, curbs and gutters, the subdivider may provide security as follows: (1) post bond, (2) establish a trust, or (3) provide for other appropriate security; provided however, that the following requirements are met:

    a. The subdivider shall declare their~~his~~ intention of proceeding under this Section in their~~his~~ letter of intent, and further, they shall designate whether a bond, trust, or some other appropriate security shall be provided. The letter shall be notarized.

    b. That said bond, trust, or other appropriate security be submitted to the Town Council for acceptance prior to recording the final plat by said Council.

    c. That the amount of said bond, trust, or other appropriate security be based on a cost estimate prepared by a registered professional engineer in an amount to cover the complete installation of the improvements and be approved by the Town Engineer prior to submission of said estimate to the Town Council.

    d. That the completion date for the installation of said paved streets, curbs and gutters be declared and notice given to the Town Council and approval given by the council prior to the final plat approval by said Council.

    e. The security as herein before required shall provide for its forfeiture to the Town unless good and sufficient reasons can be provided that said improvements have not been installed in accordance with these regulations or are not accepted by the Town by the declared completion date due to the default of the subdivider; the amount of forfeiture shall be the cost to the Town to complete the installation of said improvements in accordance with these regulations.

    f. All matters contained in this Section may be referred to the Planning and Zoning Commission by the Town Council for preliminary study and recommendation.

    g. The Town Council considering recommendations from the Planning and Zoning Commission may require improvement security, as delineated for streets in this ordinance, for private streets, road, or driveways in an approved planned area development prior to recording a final subdivision plat.

2. Waiver of Street Improvements in Certain Subdivisions: Paving widths, curbs, gutters and sidewalks may be waived by the Town Council considering recommendations of the Planning and Zoning Commission, subject to topographic terrain or aesthetic conditions.

3. Acceptance of Streets: Subdivision streets will be accepted for maintenance by the Town only when they meet requirements of the minimum standards as set forth by the Town Engineer and all other applicable Section of these regulations.

F. PARTIAL DEVELOPMENT; DECLARATION OF IMMEDIATE IMPROVEMENT

1. The subdivider may provide plans for the partial development of subdivisions, whereby Town Council in accepting the final plat for recording, shall require that the bond, trust or other appropriate security be sufficient to cover that portion of the subdivision premises which the subdivider has elected to immediately improve, as that portion is described in a “declaration of immediate improvement” which the subdivider shall submit to the Town Council, provided that no improvement or sale of lots shall be commenced in any other area of the subdivision not covered by a “declaration of immediate improvement” on the new area, and provided further that the proper security is approved as specified herein, and provided further that a completion date for the improvements for each area be declared in each “declaration of immediate improvement”.

SECTION 711. VARIANCE AND APPEALS

A. HARDSHIP

The Planning and Zoning Commission and the Town Council may authorize variances from the terms of these regulations, where, by reason of exceptional or extraordinary situation or condition of a tract of land, the strict application of any regulation enacted herein would result in peculiar and exceptional practical difficulties to, or undue hardship upon, the subdivider. Such variance may be given provided such relief may be granted without detriment to the public good and without impairing the intent and purposes of these regulations.

B. APPEALS

Any aggrieved person whose preliminary~~final~~ plat has been rejected or disapproved by the Planning and Zoning Commission may appeal to the Town Council for a hearing within thirty~~sixty~~ (3~~6~~0) days after such rejection. The Council's decision for both preliminary and final plats shall be final and shall become effective immediately. Notice of the decision shall be mailed to the applicant at the address shown in the application.

SECTION 712. LEGAL PROCEDURE, VIOLATION, PENAL~~I~~TIES AND REMEDIES

A. LEGAL PROCEDURES

Any use of development of pr~~e~~op~~e~~rty contrary to the provisions of the Subdivision Regulations shall be and the same is hereby declared to be unlawful, against the public safety and welfare, and a public nuisance and the Town Attorney shall, upon order of the Town Council, or in their~~his~~ own initiative, immediately commence all necessary actions or proceedings for the abatement, enjoinment and removal thereof in the manner provided by law, shall take such other lawful steps and shall apply to such court or courts as may have jurisdiction to grant such relief as will abate, enjoin and restrain any person, firm, or corporation from setting, developing, erecting, building, moving, or maintaining any such building or using any property contrary to these provisions of these Subdivision Regulations, or otherwise violating these Subdivision Regulations.

B. VIOLATIONS AND PENALTIES

Any violations of this Ordinance shall be subject to the enforcement provisions and penalties set forth in Chapter 18 of the Jerome Town Code~~Any person, firm, corporation, or other legal entity who violates any provision of these regulations shall be guilty of a misdemeanor and, upon conviction thereof, shall be punished by a fine of not more than three hundred dollars ($300.00). Each day that a violation is permitted to exist may constitute as separate offense. The imposition of any sentence shall not exempt the offender from compliance with the requirements of these regulations~~.

C. REMEDIES

All remedies provided for herein shall be cumulative and not exclusive. The conviction and punishment of any person hereunder shall not relieve such person from the responsibility to correct said prohibited conditions. In addition to the other remedies provided in the Section, any adjacent or neighboring property owner who shall be especially damaged by the violations of any provisions of these Subdivision Regulations may institute, in addition to the other remedies provided by law, injunction, mandamus, abatement or any other appropriate action, proceeding or proceedings to prevent or abate or remove such unlawful erection, constructions, reconstruction, alteration, maintenance or use.

SECTION 713. AMENDMENTS

A. AMENDMENTS

The Planning and Zoning Commission and the Town Council may amend these regulations after giving public notice of any such proposed amendment and after holding a hearing thereon.

B. SUBDIVISION REVISIONS

No changes, erasures, modifications or revisions shall be made in the final plat after approval of the plat has been given by the Town Council.

SECTION 714. ENFORCEMENT AND EFFECTUATION

A. ACCEPTANCE

No final plat of a subdivision shall be approved by the Planning and Zoning Commission and accepted by the Town Council unless it conforms to all of the provisions of these regulations.

B. INTERPRETATION

1. In the interpretation and application of the provisions of these regulations, the regulations shall be regarded as the minimum requirements for the protection of the public health, safety, comfort, morals, convenience, prosperity and welfare.
2. These regulations shall not abrogate or annul any permits issued before the effective date of these regulations, nor shall they abrogate or annul any easement, covenant, or any other private agreement.

C. SEPARABILITY

1. If any article, section, subsection, sentence, clause, or phrase of these regulations is for any reason held to be unconstitutional or invalid by a decision of any court of competent jurisdiction, such holding shall not affect the validity of the remaining portions. ~~-~~The Planning and Zoning Commission hereby declares that it would have adopted these regulations and each article, section, subsection, sentence, clause and phrase thereof separately and irrespective of the fact that if any one or more of the articles, sections, subsections, sentences, clauses, or phrases be deemed unconstitutional or invalid.
2. If the application of any provisions of these regulations to any tract of land is declared to be invalid by a decision of any court of competent jurisdiction, it is hereby declared to be the intent that the effect of such decision shall be limited to that tract of land immediately involved. Such a decision shall not affect, impair or nullify these regulations as a whole or in any part in its application to any other tract of land.

D. REPEALS

All regulations or codes of the Town of Jerome inconsistent herewith, to the extent of such inconsistency, and no further, are hereby repealed. ~~-~~The repeal of any of the above-mentioned regulations, or codes, does not revive any other regulation or code. Such repeals shall not affect nor prevent the prosecution or punishment of any person for the violation of any regulation or code repealed hereby, for an offense committed prior to the repeal.

~~E. EFFECTIVE DATE~~

~~Effective Date: The provisions of these regulations shall be effective thirty (30) days after final approval and adoption by the Town Council of Jerome, Arizona, as provided in Title Nine, 474-479, of the Arizona Revised Statues, as amended.~~

APPENDICES

APPENDIX A~~SECTION 201.~~ DEFINITIONS~~G~~

Abutting - the condition of two adjoining properties having a common property line or boundary, including cases where to or more lots adjoin only a corner or corners.

~~**Access - denotes the right vested in the owner of land which adjoins a road or other highway to go and return from his own land to the highway without obstruction. Access to property does not necessarily carry with it possession**~~

Access, Direct – The provision for immediate ingress and egress of vehicles from an abutting property to an adjacent street.

Access, Indirect – The provision for ingress and egress of vehicles from an abutting property to an adjacent street, is shared by two or more properties or is channeled by some means indirectly to the adjacent street

Access Point – A driveway or other opening for vehicles to enter from or exit to a street.

Access, Private – A private access is an access not in public ownership or control by means of deed, dedication, or easement.

Access, Public – A means of physical approach available to the general public.

~~**Accessory building - a building or structure which is visually subordinate to and the use of which is incidental to that of the main building, structure or use on the same lot or parcel. Accessory buildings or structures shall not be used for human habitation.**~~

Accessory Building or Structure - A building~~use~~ or structure that is subordinate in size and~~or~~ purpose to the principal structure ~~or use~~ of the same lot or parcel ~~of ground~~ and serving a purpose customarily incidental to the use of the principal structure or use of land.

Accessory building, Height of - the vertical measurement down from the highest point on the structure to an intersection with the horizontal projection of a plane established as the median between the highest and lowest points of original grade beneath the enclosed portion of the structure. (See Appendix for diagrams.)

Accessory feature - any manmade structure erected upon or appurtenant to real property

Accessory use - a use incidental, related, appropriate, and clearly subordinate to the main use of the lot or building, which accessory use does not alter the principal use of the subject lot or parcel.~~,~~

~~**Access Street or Service Road** - A street or road which is parallel to and adjacent to a major arterial street and provides a means of direct ingress and egress to abutting property.~~

Acre - an area of land containing 43,560 square feet.

Adjacent~~**, adjoining**~~ - nearby, but not necessarily touching.

Administrative and Professional Office - any building, structure, or portion thereof used or intended to be used as an office for a lawyer, architect, engineer, surveyor, planner, optometrist, accountant, doctor, dentist, or other similar professions.

Agriculture - the tilling of the soil, raising of crops, horticulture, viticulture, silviculture, small livestock farming, dairying and/or pasture and range livestock production, including all uses customarily incidental thereto but not including slaughter houses, fertilizer yards, or plants for the reduction of animal matter or any other industrial use which is similarly objectionable because of noise, odor, smoke, dust or fumes. Agriculture does not include the concentrated single-use operation of feed lots, hog, turkey, chicken, fur-bearing animals or other similar farms, unless these operations are operated in conjunction with or are a part of the crop production of the same or adjoining parcel under common ownership.

~~**Alley** - a public dedicated right-of-way, affording a secondary means of access to abutting property and is not intended for general traffic circulation.~~

~~Alley(Subdivision Manual): A public, dedicated right-of-way used primarily as a service of secondary means of ingress and egress to the service side of abutting property.~~**Alley** - An unnamed public or private right-of-way less that is primarily designed to serve as secondary access to the rear or side of those properties whose principal frontage is on some other street.

Amendment - a change in the wording, context, or substance of this ordinance, or an addition or deletion or a change in the zone district boundaries or classifications of the zoning map.

~~**Animal hospital** - facilities for the care, treatment, and boarding of animals including the term "veterinary clinic."~~**Animal Hospital** - Any building or portion of a building designed or used for the care, boarding, observation, and treatment of animals, including a veterinary clinic.

~~**Antenna** - accessory feature used for electronic signal reception or transmission.~~**Antenna** - Any structure designed for transmitting signals to a receiver or receiving station or for receiving television, radio, data, communication, or other signals from other antennas, satellites, or other services.

Antique - a product that is sold or exchanged because of value derived or~~,~~ because of oldness as respects the present age, and not simply because same is not a new product.

~~**Apartment** - a room or suite of two (2) or more rooms in a multiple dwelling, occupied or suitable for occupancy as a residence for one (1) family.~~**Apartment** - A part of a building consisting of a room or rooms intended, designed, or used as a residence by an individual or a single family.

~~**Apartment House** - A building containing apartments with two (2) or more families living independently of each other.~~

Appeal - an action which permits anyone to arrange for a hearing from other than the individual or group from whose decision the appellant seeks redress.

ARS - Arizona Revised Statutes (Arizona State Law).

Artist - O~~o~~ne who practices the fine~~an~~ arts in which imagination and taste presides over the execution, including painting, drawing, sculpture, poetry, music, dancing, and dramatic art. This is not deemed to include the business of teaching the mechanics of the art.

Attached building - (see Building, Attached).

~~**Automobile Service Station** - (see Service Station).~~ **Automobile Sales** – Storage and display for sale of more than two motor vehicles or any type of trailer provided the trailer is unoccupied, and where repair or body work is incidental to the operation of the new or used vehicle sales.

Automobile Service Station – Any building, structure, or land used primarily for the dispersal, sale, or offering for sale of automotive fuels, oils or accessories, including lubrication of automobiles and replacement or installation of minor parts and accessories, but not including major repair work such as motor replacement or rebuilding, body and fender repair or painting.

~~**Automobile Repair Garage** - a structure or part thereof, other than a private garage, where motor vehicles are repaired or painted.~~ **Automobile Repair Services Establishment** – Any building, structure, improvements, or land used for the repair and maintenance of automobiles, motorcycles, trucks, trailers, or similar vehicles, including but not limited to body, fender, muffler, or upholstery work, oil change and lubrication, painting, tire service and sales, or installation of radios, car alarms, or stereo equipment. Does not include private- garages used for the storage or maintenance of the owner or occupants' automobile.

Automobile Wrecking Yard – The dismantling or wrecking of used motor vehicles or trailers, or the storage, sale, or dumping of dismantled or wrecked vehicles or their parts.

Bed and breakfast - a building or buildings containing central kitchen facilities and not more than three (3) rooms used to provide lodging for compensation; provided that the owner or caretaker lives on the premises, smoke alarms are installed and parking has no negative effect on the neighborhood.

Beekeeping and Associated Definitions

~~**Apiary** – one or more hives or colonies of bees at one location.~~**Apiary** – A place where bee colonies are kept.

Beekeeper – a person who owns and/or breeds bees, especially for their honey.

Beekeeping (or apiculture) – the maintenance of bee colonies, commonly in man-made hives by humans. May include the manufacture of honey, beeswax, and other byproducts of the beekeeping process.

Colony – the inhabitants of the hive, including the queen, drones, worker bees and brood.

Flyway barrier – a solid wall, fence, dense vegetation, or combination of these materials at least six (6) feet high that extends at least ten (10) feet beyond the hives on each end of a bee colony.

Block - An area of land within a subdivision that is entirely bounded on all sides by streets and/or exterior boundary or boundaries of a subdivision.

Board of Adjustment - (see Section 1065)

Boundary, Zone - the limit and extent of each zone district classification as shown on the official zoning map.

Building - a structure having a roof supported by columns or walls (see Structure).

Building, Attached - a building which has at least part of a wall in common with another building, or which is connected to another building by a roof.

Building, Detached - a building which is separated from another building or buildings on the same lot.

Building, Height of - the vertical measurement down from the highest point on the structure to an intersection with the horizontal projection of a plane established as the median between the highest and lowest points of original grade beneath the enclosed portion of the structure. (See Appendix for diagrams.)

Building, ~~Main~~ Principal - a building, or buildings, in which is conducted the principal use of the lot on which it is situated. In any residential district, any dwelling shall be deemed to be the main building of the lot on which the same is situated.

Building Area - the total areas, taken on a horizontal plane at the mean grade level, of the principal buildings and all accessory buildings ~~(including decks)~~, exclusive of decks, uncovered porches, terraces, and steps.

~~**Building Permit** - a permit required for the erection, construction, modification, addition to or moving of any building, structure or use in the incorporated area of the Town of Jerome.~~**Building Permit** – An official document or certification that is issued by the building official and which authorizes the construction, alteration, enlargement, conversion, reconstruction, remodeling, rehabilitation, erection, demolition, moving, or repair of a building or structure.

Building Inspector – A governmental employee charged with enforcement of the building code, and such other ordinances as may be assigned to their department.

Building Scale – The perceived relative height and bulk of a building to that of neighboring buildings.

Building Setback - the minimum distance as prescribed by this ordinance between any property line and the closest point of the foundation or any supporting post or pillar of any building or structure related thereto.

~~**Building Site** - the ground area of a building or buildings together with all open spaces adjacent thereto, as required by this ordinance, does not include any streets, alleys, access easements or other rights-of-way necessary for access to the property, or as a means of access through one property to another parcel of land.~~**Building Site** – Land occupied or intended to be occupied by a building or interrelated buildings, together with all open space required by this ordinance, which is located on a lot that has been lawfully created and meets all criteria of this ordinance for the intended use. Does not include any streets, alleys, access easements or other rights-of-way necessary for access to the property, or as a means of access through one property to another parcel of land.

Business Day – Any day that Town Hall is open for the conduct of regular business, excluding Saturdays, Sundays, holidays, and other days on which Town offices are officially closed. Holidays are those recognized by the Town of Jerome.

Business or Commerce - The purchase, sale or other transaction involving the handling or disposition (other than defined in the term "industry") of any article, substance or commodity for livelihood or profit, including in addition, operation, or provision of any service or service establishment, office building, outdoor advertising sign or structure, recreational or amusement enterprise conducted for livelihood or profit.~~profit or livelihood.~~

Calendar Day – Every day shown on a calendar, including Saturdays, Sundays, and holidays

Campground - any lot, parcel, or tract of land used, designed, maintained, and intended for rent of plots or sites to accommodate temporary camping by the travelling public with or without sanitary facilities and water, whether or not a charge is made for the use of the park and its facilities.

Caretaker, Property – Any person who resides on the property and who performs maintenance or repair services on a regular basis.

Caretaker's Residence – A single-family dwelling unit accessory to an agricultural, professional, commercial, or industrial use for occupancy by the property caretaker.

Cargo Container – A standardized, reusable vessel that is or appears to be: (1) originally, specifically or formerly designed for or used in the packing, shipping, movement or transportation of freight, articles, goods, or commodities, or (2) designed for or capable of being mounted or moved on a rail car, or (3) designed for or capable of being mounted on a chassis or bogie for movement by truck trailer or loaded on a ship.

Carport - an accessory structure or portion of a main structure open on one~~two~~ (1~~2~~) or more sides designed for the storage of motor vehicles, without full enclosure.

Cemetery - land used or intended to be used for the burial of the dead, and dedicated for such purposes, including columbariums, crematoriums, mausoleums, and mortuaries when operated in conjunction with and within the boundaries of such premises.

Child Care Center – A facility other than a private residence that provides care, supervision, education, instruction, developmental activities, or a combination thereof for minor children for periods of less than 24 hours per day. The facility is generally described as child care center, day care center, day nursery, nursery school, parent cooperative pre-school, play group, or drop-in center. "Child care center" or "day care center" does not include a Sunday school conducted by a religious organization where children are cared for during short periods of time while persons responsible for such services are attending religious activities.

Child Day Care Home – A private residence in which more than six but not more than 12 minor children are given care and supervision for periods of less than 24 hours a day, unattended by a parent or legal guardian, except children for whom the provider is a parent, stepparent, guardian, custodian, or other relative.

~~**Church** – a permanently located building commonly used for religious worship fully enclosed with walls, but including windows and doors, and having a structurally solid and sound roof.~~ **Church** – A building wherein persons regularly assemble for religious worship and which is maintained and controlled by a religious body organized to sustain a public worship, together with all accessory buildings and uses customarily associated with such primary purpose.

Circulation Plan - That portion of the General~~Comprehensive~~ Plan adopted by the Planning and Zoning Commission and Town Council designating and defining the physical street system for Jerome, Arizona.

~~**Clinic** – a place for the provision of group medical services, not involving overnight housing of patients.~~ **Clinic** – A facility providing medical, psychiatric, or surgical service for sick or injured persons exclusively on an outpatient basis, including emergency treatment, diagnostic services, training, administration, and services to outpatients, employees, or visitors.

~~**Club** – an association of persons for some common non-profit purposes, but not including groups organized primarily to render a service which is customarily carried on as a business.~~**Club** – Buildings and

facilities, owned or operated by a corporation, association, person or persons, for a social, educational, or recreational purpose, to which membership is required for participation and not primarily operated for profit nor to render a service that is customarily carried on as a business.

~~**Clubhouse** - a structure and related facilities for conducting or continuing the social purposes for which the club was organized.~~**Clubhouse** – A building to house a club or social organization not conducted for private profit, as documented by state or federal records, and which not an adjunct to or operated by or in connection with a public tavern, café, or other public place.

Commission - Town of Jerome Planning and Zoning Commission. (See Section 1~~0~~54.)

Common Area – Land in a development held in common or single ownership and not reserved for the exclusive use or benefit of an individual tenant or owner.

~~**Comprehensive Plan (General Plan)** - a plan developed and adopted by the planning and zoning commission and town council as a guide for future growth and development within the Town of Jerome, including any other plan adopted as a part or any amendments to such plan or parts thereof.~~

Conditional Approval – An affirmative action by a commission or council indicating that approval will be contingent upon satisfaction of certain specified stipulations.

~~**Contiguous** - in actual contact.~~**Contiguous** – In contact, adjoining, or touching another object or item, as distinguished from being adjacent.

Convalescent Home - (same as Nursing Home).

Cooking Facility – An area containing facilities for the storage, cooking, or preparation of food, that is accessory to a principal use. A cooking facility may be located in an enclosed or unenclosed area. Specifically includes a sink, refrigerator, stove, and oven, but not microwaves, hotplates, or other similar appliances.

Cornice – Any horizontal member, structural or nonstructural, of any building, projecting outward from the exterior walls at the roof line, including eaves and other roof overhang.

Council - Jerome Town Council.

~~**Court** - any space other than a yard on the same lot with a building or group of buildings and which is unobstructed and open to the sky from above the floor level of any room having a window or door opening on such court. The width of a court shall be its least horizontal dimension.~~**Court** – An open, unoccupied space, other than a yard, on the same lot with a building or group of buildings, which is bounded on two or more sides by such building or buildings.

County - Yavapai County, State of Arizona.

~~**Covenants** - Shall mean a privately prepared recorded document designed to govern the use of parcels within a subdivision.~~**Covenant, Protective** – A contract entered into between private parties which constitutes a restriction on the use of a particular parcel of property.

Cultural Resources – Those resources that possess qualities of significance in national, state, or local history, architecture, archaeology, and culture and which are present in districts, sites, structures, and objects that possess integrity of location, design, setting, materials, workmanship, and association.

Cupola – A small dome and the shaft that supports it; sits on top of a building.

Dancehall – A place of assembly, open to the public and operated for profit, where dances, parties, receptions, and other gatherings are held. Dance halls may provide live entertainment, may serve alcoholic beverages, and may serve catered meals provided the owner or operator holds the appropriate licenses and permits.

~~**Cul-de-Sac Street** - A street or road having a traffic outlet on one end only and having at the other end facilities for turning around of vehicular traffic.~~

Day Care - (see Child Care Center~~School, Nursery~~).

Dead-End Street - A street or road having a traffic outlet on one end only. A dead-end street may or may not have temporary provisions for the turning around of vehicular traffic.

~~**Deck** - An open, unroofed porch or platform structure built at least twelve (12) inches above the ground that is located in the front, rear, or side yard or court of a property. When a structure has a roof or wall enclosure that keeps out the elements, it is not a deck and shall be deemed part of the primary structure for purposes of this Ordinance.~~ **Deck** – A roofless outdoor space built as a platform structure at least twelve (12) inches above ground, projecting from the wall of a building, and connected by structural supports at grade or by the building structure.

~~**Design Review Board** - (see Section 106).~~**Dormer** – A window vertical in a roof or the roofed structure containing such a window.

~~**Drive-In Restaurant** - any establishment where food or beverages are dispensed and may be consumed on the premises, but not within a closed building.~~

Drive-In Theater - an open air theater where the performance is viewed by all, or part, of the audience from motor vehicles.

Drive-Through Establishment - A business establishment so developed that its retail or service character is dependent on providing a driveway approach or parking spaces for motor vehicles so as to serve patrons while in the motor vehicle rather than within a building or structure. (For restaurants, see Restaurant, Fast Food.)

Driveway – A private roadway providing access for vehicles to a parking space, garage, dwelling, or other structure.

Dump ~~–~~ (See Landfill)~~a place used for the disposal, abandonment or discarding by burial, incineration or by any other means of any garbage, sewage, trash, refuse, rubble, waste material, offal, or dead animals. Such use shall not include any industrial or commercial processes, and/or material.~~

Dwelling - A building or portion thereof designed or used primarily as living quarters for one or more families, but not including fraternity and sorority houses, nursing homes, hotels, motor lodges, or other accommodations for the transient public.~~**Dwelling** - a building portion thereof designed exclusively for residential purposes, including one-family, two-family, three-family and multiple dwellings; but not including hotels, fraternity and sorority houses, rest homes and nursing homes, or child care nurseries.~~

Dwelling, Single~~One~~-Family - a detached building designed exclusively for occupancy by or occupied by one (1) family for residential purposes.

Dwelling, Duplex – A building designed as a single structure, containing two separate living units, each of which is designed to be occupied as a separate permanent residence for one family.

Dwelling, Triplex – A building designed as a single structure, containing three separate living and housekeeping units, each of which is designed to be occupied as a separate permanent residence for one family.

Dwelling, Quadplex - A building designed as a single structure, containing four separate living and housekeeping units, each of which is designed to be occupied as a separate permanent residence for one family.

Dwelling, Live/Work - a dwelling unit combining residential use types with limited nonresidential-use types.

Dwelling (Home), Manufactured – A factory-built, single-family structure that is manufactured under the authority of the National Manufactured Home Construction and Safety Standards Act, is transportable in one or more sections, is built on a permanent chassis, and is used as a place of human habitation; but which is not constructed with a permanent hitch or other device allowing transport of the unit other than for the purpose of delivery to a permanent site, and which does not have wheels or axles permanently attached to its body or frame.

Dwelling, Modular - a dwelling unit or habitable room thereof which is either wholly or insubstantial part manufactured at an off-site location to be assembled on site, except that it does not include a mobile home as defined in this article.

~~**Dwelling, Two-Family** - a building designed exclusively for occupancy by or occupied by two (2) families living independently of each other (i.e., duplex).~~

~~**Dwelling, Three-Family** - a building designed exclusively for occupancy by or occupied by three (3) families living independently of each other (i.e., triplex).~~

Dwelling, Multi-Family - a building designed exclusively for occupancy by or occupied by five~~four~~ (5~~4~~) or more families living independently of each other (i.e., five~~our~~ plex or apartment).

~~**Dwelling Unit** - a room or group of rooms within a dwelling containing one (1) cooking accommodation, occupied exclusively by one (1) or more persons living as a single non-profit family housekeeping unit.~~**Dwelling Unit** – A portion of a building designated as the residence of a one family or individual with suitable approved provisions for eating, sleeping, cooking, and sanitation.

~~**Easement** - a space on a lot or parcel of land reserved or used for location and/or access to utilities, drainage or other physical access purposes. No structure or other physical obstruction may be located within an easement.~~**Easement** – Shall mean any recorded interest in land owned by another for a specific (limited) use (i.e., access)

Eave – The projecting lower edges of a roof overhanging the wall of a building.

Electric Transmission Line - An electr~~on~~ic line used for the bulk transmission of electricity between generating or receiving points and major substations or delivery points and having a rating of over twelve thousand (12,000) volts.

Eminent Domain – The authority of a government to take, or to authorize the taking of, private property for public use.

~~**Erect** - the word "erect" includes built, built upon, added to, altered, constructed, reconstructed, moved upon, or any physical operations on the land, required for a building.~~**Erect** – The acts of building, constructing, altering, reconstructing, moving a structure upon, or any physical operations on the premises which are for construction. Excavation, fill, drainage, material storage, hauling, and the like shall be considered a part of erection.

Essential Services -Services provided by public and private utilities, necessary for the exercise of the principal use or service of the principal structure. These services include underground, surface, or overhead gas, electrical, steam, water, sanitary sewerage, stormwater drainage, and communication systems and accessories thereto, such as poles, towers, wires, mains, drains, vaults, culverts, laterals, sewers, pipes, catch basins, water storage tanks, conduits, cables, fire alarm boxes, police call boxes, traffic signals, pumps, lift stations, and hydrants, but not including buildings used or intended to be used for human habitation.

Façade – The exterior side of a building which faces, and is most nearly parallel to, a public or private street. The façade shall include the entire building walls, including wall faces, parapets, fascia, windows, doors, canopies, and visible roof structures of one complete elevation.

Factory-Built Building – A residential or nonresidential building, including a dwelling unit or habitable room thereof, which is either wholly or in substantial part manufactured at an off-site location to be assembled on-site, except that it does not include a manufactured home, recreational vehicle, or mobile home.

Family - an individual, or two (2) or more persons related by blood or marriage, or a group of persons not related by blood or marriage, living together as a single housekeeping group in a dwelling unit.

Farm – Any land or buildings or structures on or in which agriculture and farming operations are carried on and shall include the residence or residences of owners, occupants, or employees located on such land.

Farming - land used or cultivated which is intended only as a supplementary source of income or livelihood.

~~**Fence** – a structure built to separate two (2) parcels of land or separate a parcel of land into different use areas.~~**Fence** – An artificially constructed barrier of wood, masonry, stone, wire, metal, or other manufactured material or combination of materials erected to enclose, screen, or separate areas.

Final Plat - the final drawing of a property being subdivided as prepared by a land surveyor or engineer for recording and approval by the Planning and Zoning Commission and the Town Council. ~~and prepared in accordance with 403 of these regulations.~~

Floodplain - the areas adjoining the channel of a watercourse, or areas where drainage is or may be restricted by man-made structures which have been or may be covered partially or wholly by floodwater, but shall compose an area not less than that area confined by the fifty-year flood and shall not exceed that area confined by the one hundred-year flood.

Floor Area Ratio (FAR) – The ratio of gross building floor area to the net lot area of the building site.

Frontage - the linear distance of property along a public right of way.

Garage, P~~p~~rivate - an accessory building or a main building or portion thereof, used for the shelter or storage of self-propelled vehicles, owned or operated by the occupants of a main building wherein there is no service or storage for compensation.

Garage, Public - any building, except one herein defined as a private or storage garage used for the storage, care or repair or self-propelled vehicles or where any such vehicles are equipped for operation or kept for hire.

Garage, Repair - (see Automobile Repair Service Establishment~~Garage~~).

General Plan - a plan developed and adopted by the planning and zoning commission and town council as a guide for future growth and development within the Town of Jerome, including any other plan adopted as a part or any amendments to such plan or parts thereof.

Governmental Agency - includes any agency of the federal, state, county or municipal governments.

Greenhouse - a building or structure constructed chiefly of glass, glass like translucent material, cloth or lath, which is devoted to the protection or cultivation of flowers or other tender plants.

Greenhouse, Industrial – Wholesale business whose principal activity is the growing and selling of plants within an enclosed building.

Guest House – (See Accessory Dwelling Unit)

~~**Guest Room** – a room having no cooking facilities intended for occupancy by one or more persons not members of the family. Does not include dormitories for sleeping purposes.~~**Guest Room** – One or more rooms intended as one occupancy overnight (or longer) by other than a member of the family. If such contains cooking facilities, it is deemed a dwelling unit. Does not include dormitories for sleeping purposes.

Half Street - A street having on a portion, usually one half (1/2), of its required right-of-way width dedicated for public use.

Hardship – A restriction on property so unreasonable that it results in an arbitrary and capricious interference with basic property rights. Hardship relates to the physical characteristics of the property, not the personal circumstances of the owner or user, and the property is rendered unusable without the granting of a variance.

Hedge – A row of closely planted shrubs, bushes, or any kind of plant forming a boundary or fence.

Height, Building or Structure - (see Building, Height of, and Accessory Building, Height of).

Hives – the domicile of bees, including any receptacles or containers inhabited by bees.

Hillside – Land that has an average percent of slope equal to or exceeding 15 percent.

Historic District – A district or zone designated by a local authority or state or federal government within which buildings, structures, appurtenances, and places are of basic and vital importance because of their association with history; or because of their unique architectural style and scale, including color, proportion, form, and architectural detail; or because of their being a part of or related to a

square, park, or area the design or general arrangement of which should be preserved or developed according to a fixed plan based on cultural, historical, or architectural motives or purposes.

Historic Preservation – The preservation of historically significant structures and neighborhoods until such time as, and in order to facilitate, restoration and rehabilitation of the building(s) to a former condition.

Historic Preservation/Design Review Board – (see Sections 107 and 304)

Historic Resource, Contributing – A resource in a registered historic district or historic complex supporting the district's or complex's historical significance through location, design, setting, materials, workmanship, feeling, and association.

Historic Resource, Noncontributing – A building, site, structure, or object that does not add to the historic architectural qualities, historic association, or cultural values of the area because it was not present during the period of significance or does not relate to the documented significance of the property due to alterations, disturbances, additions, or other changes, or because it no longer possesses historic integrity nor is capable of yielding important information about the period.

Historic Resources Survey – A comprehensive survey involving the identification, research, and documentation of buildings, sites, and structures of any historical, cultural, archaeological, or architectural importance.

Historic Structure – Any structure that is: (a) listed individually in the National Register of Historic Places (a listing maintained by the Department of Interior) or preliminarily determined by the Secretary of the Interior as meeting the requirements for individual listing on the National Register; (b) certified or preliminarily determined by the Secretary of the Interior as contributing to the historical significance of a registered historic district or a district preliminarily determined by the Secretary to qualify as a registered historic district; (c) individually listed on the Arizona Register of Historic Places; or (d) individually listed on a local inventory of historic places in communities with historic preservation programs that have been certified by the Arizona State Historic Preservation Office (SHPO).

Home Occupation - an occupation, profession, activity or use that is clearly a customary, incidental and secondary use of a residential dwelling unit and which does not alter the exterior of the property or affect the residential character of the neighborhood.

Horticulture – The use of land for the growing or production for income of fruits, vegetables, flowers, nursery stock, including ornamental plants and trees, and cultured sod.

~~**Hospital** - a place for the treatment or care of human ailments, and unless otherwise specified, the term shall include sanitarium, preventorium, clinic and maternity home.~~**Hospital** – An institution, licensed by the state department of health, providing primary health services and medical or surgical care to persons, primarily inpatients, suffering from illness, disease, injury, deformity, and other abnormal physical or mental conditions, and including as an integral part of the institution, related facilities such as laboratories, outpatient facilities, or training facilities. The term shall include sanitariums, preventoriums, and maternity homes.

~~**Hotel** - a building in which lodging is provided and offered to the public for compensation and which is open to transient guests.~~**Hotel** – An establishment providing, for a fee, sleeping accommodations and customary lodging services, including maid service, the furnishing and upkeep of furniture and bed linens, and telephone and desk service. Related ancillary uses may include, but shall not be limited to, conference and meeting rooms, restaurants, bars, and recreational facilities.

Impervious surface – Any hard-surfaced, man-made area that does not readily absorb or retain water, including but not limited to building roofs, parking and driveway areas, graveled areas, sidewalks, and paved recreation areas.

Industry, Heavy – Manufacturing or other enterprises with significant external effects, or which pose significant risks due to the involvement of explosives, radioactive materials, poisons, pesticides, herbicides, or other hazardous materials in the manufacturing or other process.

~~**Industry, Light** - those industrial uses which do not result in extensive open yard area, storage of extensive raw materials, nor otherwise result in noise, odors, dust, lights, vibration, waste products or~~

~~adversely affect the surrounding properties.~~**Industry, Light** – Manufacturing or other enterprise which assembles, improves, treats, compounds, or packages goods or materials in a manner which does not create a noticeable amount of noise, dust, odor, smoke, glare or vibration outside of the building in which the activity takes place, which does not require extensive outside storage of goods or materials, and which does not generate objectionable amounts of truck traffic.

Infill Development - Development or redevelopment of land that has been bypassed, remained vacant, and/or is underused as a result of the continuing urban development process. Generally, the areas and/or sites are not particularly of prime quality; however, they are usually served by or are readily accessible to existing infrastructure (services and facilities). Use of such lands for new housing and/or other urban development is considered a more desirable alternative than to continue to extend the outer development pattern laterally and horizontally, thus necessitating a higher expenditure for capital improvements than would be required for infill development.

~~**Ingress** The movement of traffic from the street to abutting property and the movement from major streets to minor streets.~~**Ingress** – Access or entry point or entrance.

Intensification of Use – To alter the character of a use to the extent that the use generates new or different impacts on the health, safety, or welfare of the surrounding neighborhood, including but not limited to the level or amount of traffic, noise, light, smoke, odor, vibration, outside storage, or other similar conditions associated with the use.

Intensity – A relative measure of development impact as defined by characteristics such as the number of dwelling units per acre, the amount of traffic generated, and the amount of site coverage.

Irrigated – Watered by an artificial or controlled means, including but not limited to sprinklers, furrows, ditches, or spreader dikes.

Junk Yard - the use of two hundred (200) or more square feet of any lot or parcel of land for outside storage of any used or secondhand materials, including but not limited to lumber, auto parts, household appliances, pipe, drums, machinery or furniture. The outside storage of used or secondhand materials in an area less than two hundred (200) square feet is permitted only on the rear half of a lot or parcel.

Kitchen - any room in a building containing facilities~~or dwelling unit~~ which are~~is~~ used or intended to be used for storage, cooking, and ~~or~~ ~~the~~ preparation of food, specifically a sink, refrigerator, stove, and oven.

Kindergarten - same as nursery school, except when operated in conjunction with a school of general instruction and having accredited instruction.

Laundry, Self Help - a building in which domestic type washing machines and/or dryers are provided on a rental basis for use by individuals doing their laundry.

Land - any lot or parcel, developed or undeveloped, and capable of being located, surveyed, staked and described by a legal description

Land split - A division of land whose area is two and one-half acres or less into two or three tracts or parcels of land or lots for the purpose of sale or lease.

Land Surveyor – A person registered in the state in the field of land surveying.

Land Trust – A private, nonprofit conservation organization formed to protect natural resources such as productive farm and forest land, natural areas, historic structures, and recreational areas. Land trusts purchase and accept donations of conservation easements. They educate the public about the need to conserve land, and some provide land-use and estate planning services to local governments and individual citizens.

Landscape Plan – A plan associated with a subdivision or development plan that indicates the placement of landscape materials, including specifications, species, quantities, and method of installation.

Light Pollution – Any adverse effect of man-made light.

Light Trespass – Light spill falling over property lines that illuminates adjacent grounds or buildings in an objectionable manner.

Live ~~Live~~ Entertainment – Any musical act (not including karaoke), theatrical act (including stand-up comedy), play, revue, scene, dance act, or song and dance act, or any combination thereof, performed by one or more persons, whether or not they are compensated for the performance, in a privately owned premises that is open to the public, whether or not admission is charged. Activities, such as but not limited to, billiards tables, dart boards, shuffleboards, tabletop games, card games, arcade-style games, and similar patron amenities, are not considered live entertainment provided they are not conducted as organized tournaments or other activities intended to attract patrons primarily for entertainment purposes. The presence of such incidental recreational amenities shall not, by itself, constitute entertainment requiring a Conditional Use Permit.

Live/Work Space – Areas within buildings that are jointly used for commercial/industrial and residential purposes where the residential use of the space is clearly secondary or accessory to the primary use as a place of work.

Loading, Off-Street – An unobstructed area provided and maintained for the temporary parking of trucks and other motor vehicles for the purpose of loading and unloading goods, wares, materials, and merchandise.

~~**Lodge** – an order or society of persons organized for some common non-profit purpose, but not including groups organized primarily to render a service which is customarily carried on as a business.~~**Lodge** – A membership organization that holds regular meetings and that may, subject to other regulations controlling such uses, maintain dining facilities, serve alcohol, or engage professional entertainment for the enjoyment of dues-paying members and their guests. There are no sleeping facilities. This definition shall not include fraternities or sororities.

~~**Lot** – land occupied or to be occupied by a building and its accessory structures, together with such surrounding open spaces as are required under the provisions of this ordinance, achieving not less than the minimum area required by this ordinance for a lot in the district in which such lot is situated and having frontage on a dedicated street or legally recorded easement.~~**Lot –** A parcel of land occupied or intended for occupancy by a use permitted in this chapter, including one main building, together with any accessory buildings, open spaces, and parking spaces required by this chapter and having its principal frontage upon a street, officially approved place, or legally recorded easement.

Lot Area - the total horizontal area within the lot lines of a lot.

Lot, Corner – A lot located at the intersection of two or more streets.

Lot Coverage -– A measure of intensity of land use that represents the portion of a site that is impervious, This portion includes but is not limited to all areas covered by buildings, parked structures, driveways, roads, sidewalks, and any area of concrete asphalt. ~~that portion of a lot or building site which is occupied by any building or structure, excepting paved areas, walks and swimming pools.~~

~~**Lot depth** – the depth of a lot shall be the horizontal length of a straight line connecting the bisecting points of the front and rear lot lines.~~**Lot Depth** – The horizontal distance from the midpoint of the front-lot line to the midpoint of the rear-lot line, or to the rear most point of the lot where there is no rear-lot line.

~~**Lot, double frontage** – a lot having frontage on and with access on more than one street.~~**Lot, Double Frontage –** A lot having frontage on two parallel or approximately parallel streets. For the purposes of this definition, a lot which has been denied access to one of the parallel or approximately parallel streets shall not be deemed a double frontage lot.

Lot Line – A line dividing one lot from another or from a street or any public place.

Lot Line, Rear - a lot line which is opposite and most distant from the front lot line.

~~**Lot Line, Side** – those property lines connecting the front and rear property lines.~~**Lot Line, Side** – Any lot line not considered a front or rear lot line.

Lot of Record - a lot which is part of a subdivision, the map of which has been recorded in the Yavapai county recorder's office; or parcel of land, the deed of which is recorded in the office of the county recorder.

Lot Split – The division or redivision of a tract or parcel of land into two lots, building sites, or other divisions for the purpose, whether immediate or future, of sale, legacy, or building development.

~~**Manufacturing** (see Industry, Light).~~**Manufacturing** – The mechanical or chemical transformation of materials or substances into new products, including the assembling of component parts, the creation of products, and the blending of materials including but not limited to oils, plastics, resins, etc. Includes light or heavy industry.

Marijuana Dispensary – A marijuana dispensary refers to the following:

(a) "Nonprofit Medical Marijuana Dispensary" as set forth in The Arizona Medical Marijuana Act, A.R.S. § 36-2801.12; (b) "Dual Licensee" as set forth in The Arizona Smart and Safe Act, A.R.S. § 36-2850.9; (c) "Marijuana Establishment," as set forth in the Arizona Smart and Safe Act, A.R.S. § 36—2850.21(a).

Membership Organization – A group that holds regular meetings and that may, subject to other regulations controlling such uses, maintain dining facilities, serve alcohol, or engage professional entertainment for the enjoyment of dues-paying members and their guests. There are no sleeping facilities.

Mine – An area of land upon which operations to extract valuable mineral deposits or other materials have been conducted, are being conducted, or are planned to be conducted.

Minor Street Plan - A part of the street and traffic circulation plan that ~~is~~the complementary to and interrelated with the General~~Comprehensive~~ Plan.

Mixed-Use Development – A tract of land or building or structure developed for two or more different uses such as, but not limited to, residential, office, manufacturing, retail, public, or entertainment.

Mixed-Use, Horizontal – A development pattern in which two or more different land uses, such as residential, commercial, office, civic, or recreational, are located on the same site or within the same development area but are arranged side-by-side on separate lots or in separate buildings, rather than vertically within a single structure. The uses function as a cohesive development through shared access, interconnected circulation, coordinated site design, or complementary amenities.

Mixed-Use, Vertical – A development pattern in which two or more different land uses, such as residential, commercial, office, civic, or recreational, are located within a single building.

Mobile Food Unit - A temporary food service establishment that is a vehicle-mounted food service establishment designed to be readily movable.

Mobile Home or Mobile Housing - a movable or portable dwelling over thirty-two (32) feet in length or over eight (8) feet wide, constructed to be towed on its own chassis and designed so as to be installed with or without a permanent foundation for human occupancy as a residence which may include one (1) or more components that can be retracted for towing purposed and subsequently expanded for additional capacity, or two (2) or more units separately towable but dwelling composed of a single unit. Does not include recreational vehicle as defined in this Appendix~~article~~. The removal of the wheels and running gear shall ***not*** change the meaning of this term. Mobile homes are only those units produced prior to June 15, 1976. Units produced after June 15, 1976, are considered manufactured homes as defined in this Appendix.

National Register of Historic Places – A list maintained by the Secretary of the Interior composed of buildings, sites. Structures, objects, and districts of national, state, or local significance in American history, architecture, archaeology, engineering, and culture.

Natural - the condition of the land, vegetation, rocks, and other surface features which have not been physically disturbed, changed or added to by any action of man or machine.

Natural Resource – Existing natural elements relation to land, water, air, plant, and animal life, including but not limited to soils, geology, topography, surface and subsurface waters. Wetlands, vegetation, and animal habitats.

Newspaper of general circulation -– A newspaper that is published or circulated within the Town that is regularly issued for the dissemination of news of a general and public character at stated short intervals of time. ~~*The Verde Independent*~~.

Nonconforming building - (see Section 501).

Nonconforming use - (see Section 501).

Non-Residential Subdivision - The division of a tract of land into parcels for occupancy by non-residential uses and/or structures whether for sale or for building development for leasing and/or renting.

~~**Nuisance** - anything, condition or use of property which endangers life or health, gives offense to the senses, and/or obstructs the reasonable and comfortable use of other property.~~**Nuisance** – Any thing, condition, or conduct that endangers health and safety, or unreasonably offends the senses, or obstructs the free use and comfortable enjoyment of property, or essentially interferes with the comfortable enjoyment of life.

~~**Nurseries** - a commercial operation for the growth and sale or plants, storage of equipment for landscaping and the wholesale-retail sale of commercial gardening supplies.~~**Nursery** – An establishment for the growth, storage, display, and/or sale of plants, shrubs, trees, and materials used in indoor or outdoor planting, conducted within or without an enclosed building.

~~**Nursing Home** - a structure operated as a lodging house in which nursing, dietary and other personal services are rendered to convalescents, not including persons suffering from contagious diseases and in which surgery is not performed and primary treatment, such as customarily is given in hospitals and sanitariums, is not provided. A convalescent home shall be deemed a nursing home.~~ **Nursing Home** – A use providing bed care and inpatient services for persons requiring regular medical attention but excluding a facility providing surgical or emergency medical services and excluding a facility providing care for alcoholism, drug addiction, mental disease, or communicable disease.

~~**Office** - a room or rooms and accessory facilities for the managing or conducting of a business.~~**Office** – A room or group of rooms used for conducting the affairs of a business, profession, service industry, or government.

Off-Street Loading Facilities - a site or a portion of a site devoted to the loading or unloading of motor vehicles or trailers, including loading berths, aisles, and access drives. (see Section 510).

Off-Street Parking Facilities - a site or a portion of a site devoted to the off-street parking of motor vehicles including parking spaces, aisles, and access drives. (see Section 510).

Open Area - any area used or intended to be used for parking, recreation, open space, agriculture, landing fields and other similar uses.

~~**Open Space** - any area used or intended to be used for recreation and/or conservation purposes for an unspecified period of time. This term implies that the environment will remain in its natural state and not be physically disturbed in any way.~~**Open Space –** An area or portion of land, either landscaped or essentially unimproved and which is used to meet human recreational or spatial needs, or to protect water, air, or plant areas.

Open Space, Natural – An area or portion of land maintained in its native condition, often characterized by intact natural landscapes, native vegetation, wildlife habitat, and natural landforms. Allowable activities are limited to passive or low-impact uses such as natural earth walking trails, scientific research, and environmental education.

Original Grade - the condition of the surface of the property at the time of submittal of preliminary site plan with no grading changes made.

Overlay Zoning District – A zoning district to be mapped as an overlay to a use district and which modifies or supplements the regulations of the general district in recognition of distinguishing

circumstances such as historic preservation, wellhead protection, floodplain or unit development while maintaining the character and purposes of the general use district area over which it is superimposed.

Parapet – That part of any wall entirely above the roof line.

~~**Park** - a public or private parcel of land developed and used for passive or active recreation.~~**Park –** A public or private area of land, with or without buildings, intended for outdoor active or passive recreational uses.

~~**Parking Area** - an area designed and constructed and used exclusively for the parking, storage and maneuvering of vehicles.~~**Parking Area** – Any public or private land area designed and used for parking motor vehicles including parking lots, garages, private driveways, and legally designated areas of public streets.

Parking District - a public parking district maintained by the federal, state, county or town government, to special district

~~**Pathways** - Any dedicated right-of-way used for non-motor vehicle circulation and service.~~**Path, Multi-Use** – A pathway, which may be paved or unpaved, and is physically separated from motorized vehicular traffic by an open space or barrier and is either within the highway right-of-way or within an independent tract, or easement. Multi-use path activities may include walking, hiking, jogging, horseback riding, bicycling, and roller skating.

Patio - an area, usually paved, that is used for outdoor lounging, dining, and/or recreating that is less than 12 inches above the ground surface. When a structure has a roof or wall enclosure that keeps out the elements, it is not a patio and shall be deemed part of the primary structure for purposes of this Ordinance.

Performance Standard – Zoning regulations that permit uses based on a particular set of standards of operation rather than on particular type of use. Performance standards provide specific criteria limiting noise, air pollution, emissions, odors, vibration, dust, dirt, glare, heat, fire hazards, wastes, traffic impacts, and visual impact of a use.

Permit - A document issued by Jerome, Arizona, granting permission to perform an act or service which is regulated by the Town.

~~**Person** - included are: individual association, company, firm, corporation, Partnership, co-partnership, joint venture, city, county, special district, trust or any other legal group acting as an entity.~~**Person** – A corporation, company, association, firm, partnership, as well as any individual, state, or political subdivision of a state or agency thereof.

Planning and Zoning Commission - T~~he Commission, t~~he Planning and Zoning Commission and the Planning Commission of Jerome, Arizona are synonymous.

Plat – A document, prepared by a registered surveyor or engineer, that delineates property lines and shows monuments and other landmarks for the purpose of identifying property.

~~**Playground** - an area used by children for recreation purposes. Also may include a "tot-lot".~~ **Playground** – A land use designed principally to offer recreation, passive or active, to the public. Also may include a "tot-lot".

~~**Professional Office** - any building, structure, or portion thereof used or intended to be used as an office for a lawyer, architect, engineer, surveyor, planner, optometrist, accountant, doctor, dentist, or other similar professions.~~

Property Lines - Those lines outlining the boundaries of properties on lots for the purpose of description in sale, lease, building development, or other separate use of property.

Public Building - facilities for conducting public business constructed for various public agencies, including federal, state, county, and town offices and buildings.

Public Hearing - hearings held as required by law.

Public Utility - private or public facilities for distribution of various services, such as water, power, gas, communication, etc., to the public.

Preservation – Means the act or process of applying measures necessary to sustain the existing form, integrity and materials of an historic property. Work, including preliminary measures to protect and stabilize the property, generally focuses upon the ongoing maintenance and repair of historic materials and features rather than extensive replacement and new construction. New exterior additions are not within the scope of this treatment; however, the limited and sensitive upgrading of mechanical, electrical and plumbing systems and other code-required work to make properties functional is appropriate within a preservation project.

Quorum – A majority of the authorized members of a board or commission.

Radial - A line forming right angles with the tangent of any given arc.

Reconstruction - means the act or process of depicting, by means of new construction, the form, features, and detailing of a non-surviving site, landscape, building, structure, or object for the purpose of replicating its appearance at a specific period of time and in its historic location.

Record of Survey – A map prepared by a professional land surveyor that re-establishes survey controls, boundaries, locations of improvements, or the alignment of right-of-ways for recording.

Recreation, Active – Those recreational pursuits which require physical alteration to the area in which they are performed. Such areas are intensively used and include, but are not limited to, playgrounds, ball courts, golf courses, and swimming pools.

~~**Right-of-Way** - includes any public or private right-of-way and includes any area required for public use pursuant to any general or official plan.~~

~~**Right-of-Way** - The entire dedicated tract or strip of land that is to be used by the public for circulation and service. (The length and width of a right-of-way shall be sufficient to provide adequate accommodations for all the physical features to be included in said right-of-way.)~~

Recreational **Facilities** - include~~s~~ buildings, structures or areas built or developed for purposes of entertaining, exercising or observing various activities participated in either actively or passively by individuals or organized groups.

Recreational Facility, Commercial – Recreational facilities operated as a business and open to the general public for a fee.

Recreational Facility, Private – Clubs or recreation facilities for which a membership charge may be made and which are open only to bona fide members and their guests, such as a gaming, shooting, golf, or tennis club, or other similar activities. A private recreational facility may not be open or available to members of the general public. ~~.~~

Recreation, Passive – Those recreational pursuits which can be carried out with little alteration or disruption to the area in which they are performed. Such uses include but are not limited to hiking and picnicking.

Recreational Vehicle - a vehicular type unit primarily designed as temporary living quarters for recreational, camping or travel use, which either has its own motor power or is mounted on or drawn by another vehicle.

Recreational vehicle park - facilities for the temporary storage, parking and maneuvering of recreational vehicles (motor homes, travel trailers, campers etc.) with adequate roads and stall sites, including sanitary and water facilities. Site locations are provided on a day to day basis. Does not constitute a mobile home or trailer park.

Rehabilitation - means the act or process of making possible an efficient compatible use for a property through repair, alterations and additions while preserving those portions or features that convey its historical, cultural or architectural values.

Replat – The act of platting the lots, parcels, and easements in a recorded subdivision or partition plat to achieve a reconfiguration of the existing subdivision or partition plat or to increase or decrease the number of lots in the subdivision.

Restoration - means the act or process of accurately depicting the form, features and character of a property as it appeared at a particular period of time by means of the removal of features from other periods in its history and reconstruction of missing features from the restoration period. The limited and sensitive upgrading of mechanical, electrical and plumbing systems and other code-required work to make properties functional is appropriate within a restoration project.

~~**Retail store** - a commercial business for selling goods, services, ware or merchandise directly to the customer.~~

Residence - a structure containing a dwelling unit designed for occupancy or occupied by one (1) family living as a single non-profit family housekeeping unit.

~~**Restaurant** - an establishment which serves food or beverages only to persons seated within the building. This includes cafes and tea rooms.~~**Restaurant** – Any establishment, however designated, at which food and/or beverage is sold for consumption on the premises to patrons seated within an enclosed building, or elsewhere on the premises.

Restaurant, Drive-In - any establishment where food or beverages are dispensed and may be consumed on the premises, but not within a closed building.

Restaurant, Fast Food – An establishment engaged primarily in the business of preparing food and purveying it on a self-serve or semi-self-serve basis. Customer orders and/or service may be by means of walk-up counter or window designed to accommodate automobile traffic. Consumption may be either on or off the premises.

~~**Retail store** - a commercial business for selling goods, services, ware or merchandise directly to the customer.~~**Retail Sales Establishment** – A commercial enterprise that provides goods and/or services directly to the consumer, where such goods are available for immediate purchase and removal from the premises by the purchaser.

~~**Right-of-Way** - includes any public or private right-of-way and includes any area required for public use pursuant to any general or official plan.~~

~~**Right-of-Way** - The entire dedicated tract or strip of land that is to be used by the public for circulation and service. (The length and width of a right-of-way shall be sufficient to provide adequate accommodations for all the physical features to be included in said right-of-way.)~~**Right-of-Way** – A strip of land acquired by reservation, dedication, prescription, or condemnation and intended to be occupied by a street, trail, water line, sanitary sewer, and/or other public utilities or facilities.

Roof, Gabled – A roof which slopes from both sides of a ridge.

Roof, Gambrel – A gabled roof with two slopes on each side, the lower steeper than the upper.

Roof, Hipped – A roof with slopes on all four sides, continuous from peak to eaves.

Roof, Mansard – A roof with two slopes on each of four sides, the lower steeper than the upper.

School, Charter – A public school established by a contract with the state board of education, the state board for charter schools, a university under the jurisdiction of the Arizona board of regents, a community college district or a group of community college districts, pursuant to Title 15, Chapter 1, Article 8 of the Arizona Revised Statutes, to provide learning that will improve pupil achievement.

School, **Eelementary, Jjunior Hhigh, Hhigh** ~~**school**~~ - public and other non-profit institutions conducting regular academic instruction at kindergarten, elementary and secondary levels and ~~. Such institutions shall~~ offering general academic instruction~~s~~ equivalent to the standards prescribed by the state board of education.

School, Nursery - ~~a school or the use of a site or a portion of a site for an organized program devoted to the education or day care of five (5) or more children of elementary school age or younger, than those residents on the site. Includes day care center.~~(See Child Care Center)

School, Trade - schools offering preponderant instruction in the technical, commercial or trade skills, such as real estate schools, business colleges, electronic schools, automotive and aircraft technicians schools and similar commercial establishments operated by a non-governmental organization.

Screen – A structure providing enclosure and a visual barrier between the area enclosed and the adjacent property. A screen may also be nonstructured, consisting of shrubs or other growing materials.

School, Private or Parochial - an institution conducting regular academic instruction at kindergarten, elementary, and secondary levels operated by a non-governmental organization.

Service Establishment – Any establishment whose primary activity is the provision of assistance, as opposed to products, to individuals, business, industry, government, and other enterprises.

~~**Service Station** - an occupancy engaged in the retail sales of gasoline, oil, tires, batteries, and new accessories and which provides for the servicing of motor vehicles and operations incidental thereto, including: automobile washing, waxing and polishing, tire changing and repairing, but not including recapping. May also include battery service, radiator cleaning, flushing and repair, installation of minor accessories, lubrication of motor vehicles, rental of utility trailers, testing, adjustment and replacement of motor parts and accessories.~~

Setbacks - (see Yard).

~~**Sewage Disposal, Community** - a sewage system publicly or privately owned having approval to collect and dispose of domestic and/or industrial waste materials.~~**Sewage System, Private** – A sewage disposal system that collects, treats, and disposes of sewage independent of any public sewage facilities.

Sewage System, Public – An off-site system for the treatment and disposal of sewage in which sewage is conveyed by interceptor to a publicly operated treatment plant and disposed of through means approved by the State of Arizona.

~~**Shed** - a simple roofed accessory building or structure, typically made of wood or metal, used as a storage space or a workshop.~~**Shed** – A relatively small structure often purchased pre-built or as a kit in pre-fabricated sections. It is not designed to be served by heat, electricity, or plumbing, and does not need to be placed on a permanent foundation. The structure is intended to be used as a storage space or a workshop.

Short-Term Rental – Any individually or collectively owned single-family or one-to-four-family house or dwelling unit or any unit or group of units in a condominium or cooperative that is also a transient public lodging establishment or owner-occupied residential home offered for transient use if the accommodations are not classified for property taxation under A.R.S § 42-12001. Does not include a unit that is used for any nonresidential use, including retail, restaurant, banquet space, event center or another similar use.

Sidewalk - That paved portion of the right-of-way between the curb lines or lateral lines of the roadbed and the boundary line of said right-of-way designed and intended for the movement of and use of pedestrian traffic~~.~~

Sign - (see Section 509).

Site - a parcel of land, subdivided or unsubdivided, occupied or to be occupied by a use or structure.

Site Plan – A plan, to scale, showing uses and structures proposed for a parcel of land as required by the regulations. May include, but is not limited to, lot lines, streets, building sites, reserved open space, buildings, and major landscape features, both natural and manmade.

Spirituous Liquor Tasting Facility - An establishment promoting the retail sales of vinous, spirituous or malt liquor to consumers, and allowing tasting of those vinous, spirituous or malt liquors on the premises of the tasting facility. ~~-~~A vinous, spirituous or malt liquor tasting facility may include snacks, not meals, to consume with vinous, spirituous or malt liquor as a complement to but not as the primary function of the tasting facility. Vinous, spirituous or malt liquor tasting facilities may not include dining room seating. Vinous, spirituous or malt liquor tasting facilities may have an "Other Food" License for ware washing and appetizer preparation only, not for meal preparation. A ~~vinous, S~~spirituous ~~or malt l~~Liquor T~~t~~asting F~~f~~facility shall not include establishments ~~have~~with a Series 12 restaurant liquor license.

Stable - a detached accessory structure including, but not limited to, a corral or paddock for the keeping of one or more horses owned by the occupants of the premises and which are not kept for remuneration, hire or sale.

Stable, Commercial - a structure including, but not limited to, a corral or paddock for the keeping of horses for remuneration, hire or sale.

Storm Sewer - A constructed conduit necessary, useful, or convenient for the collection and carrying of surface waters to a drainage course.

Story - that portion of a building included between the surface of any floor and the finished ceiling next above it or the finished under surface of the roof directly over that particular floor.

Street - Any existing or proposed street, avenue, boulevard, road, lane, parkway, place, bridge, viaduct or easement for public or private vehicular access or a street in a plat duly filred and recorded in the County Recorder's office. A street includes all land within the street right-of-way, whether improved or unimproved, and includes such improvements as pavement, shoulders, curbs, gutters, sidewalks, parking spaces, bridges and viaducts.

Street, Arterial Street - A street or road with the principal function to serve as a part of a major network for the through traffic flow, separate from local traffic, to and from areas of principal tragic generation, of adequate design, capacity and construction to provide for the safe and rapid distribution and collection of through traffic and to provide limited ingress and egress to and from collector and local streets.

Street, Collector Street - A street or road that serves local traffic movement within an area, and traffic between major arterials and local streets and provides a means of ingress and egress to local streets and abutting property; also serves to connect adjacent neighborhoods and includes the principal entrance streets into residential neighborhoods. There may also be provisions for parking and loading or unloading on collector streets.

Street, Cul-de-sac - A local street of relatively short length with one end open to traffic and the other end permanently terminating in a vehicular turnaround.

Minor Street, Minor - A street or road used primarily for direct access and egress to residential, commercial, and industrial areas and having major service functions of loading, unloading, and direct access and egress to abutting property, and being controlled in such fashion as to discourage through traffic and maintain relatively slow speed. There may also be provisions for parking on minor streets.

Street, Frontage Road - A minor street, parallel to and adjacent to an arterial street, whose primary purpose is providing access to abutting properties.

Street, Stub - A short dead-end street or road, no more than one lot deep in length, formed at the boundaries of a subdivision to provide access to abutting property.

Street Line - the boundary line between street right-of-way and abutting property.

Structure - anything constructed or erected which requires a fixed location on the ground, including a building but not including a fence or wall, unless the wall is part of the building used as a fence.

Structure, Main - a structure housing the principal use of a site or functioning as the principle use.

Structure Alteration - any change in the supporting members of a building, such as foundations, bearing walls, columns, beams, floor or roof joints, or any change in the exterior dimensions of a building, excepting those changes which may result from providing minor repairs and building maintenance.

Subdivision of Land - (see Arizona Revised Statutes, Section 9-463).

Subdivider - Any individual, firm, association, syndicate, co-partnership, corporation, trust or any other legal entity commencing proceedings under the regulations of Article VII Subdivision Standards, to effect a subdivision of land hereunder for himself or for another.

Subdivision - Improved or unimproved land or lands divided for the purpose of financing sale or lease, whether immediate or future, into four (4) or more lots, tracts, or parcels of land, or, if a new street is involved, any such property which is divided into two (2) or more lots, tracts, or parcels of land, or any such property, the boundaries of which have been fixed by a recorded plat, which is divided into more than two (2) parts. This definition includes land splits. Also includes any condominium, cooperative, community apartment, townhouse or similar project containing four (4) or more

parcels, in which an undivided interest in the land is coupled with the right of exclusive occupancy of any unit located thereon, but plats of such projects need not show the buildings or the manner in which the buildings or airspace above the property shown on the plat are to be divided.

Swarming – Swarming is a natural process in the life of a honeybee colony. Swarming occurs when a large group of honeybees leaves an established colony and flies off to establish a new colony. Swarming is a natural method of propagation that occurs in response to crowding within the colony.

Swimming Pool - any above or below-groundpermanent structure containing or intended to contain water for recreational uses, including wading pools.

Tentative Plat or Preliminary Plat - That portion of a preliminary plan or any separate drawing of a parcel of land that conforms with the requirements of the subdivision regulations intended for subdivision and approval of the Planning and Zoning Commission. and which is prepared in accordance with Section 401 and Section 402 of these regulations.

Town - the Town of Jerome, Yavapai County, Arizona.

Travel Trailer - a vehicle without motive power, portable structure with wheels built on a chassis, designed as a temporary dwelling for travel recreation and vacation purposes, having a body width not exceeding eight (8) feet and its body length does not exceed thirty-two (32) feet.

Trailer Park or Court - facilities for the storage, parking, and maneuvering of mobile homes or trailers with adequate road and stall sites, and providing adequate sanitation and water facilities required to meet the needs of the residents. Site location is provided on a rent or lease basis. Includes mobile home parks.

Tree, Heritage – A designated tree that is unique and important to the cultural landscape of Jerome community because of its species, age, size, location, and/or historical significance.

~~**Town** - the Town of Jerome, Yavapai County, Arizona.~~

Unapproved Lot or Parcel - A lot or parcel of land that may be legally described on a deed, appear on a recorded or unrecorded map or been assigned a parcel number by the County Recorder but has never been officially approved by any past or present Jerome Town Council.

~~**Use** - the purpose for which a site or structure is arranged, designed, intended, constructed, moved, erected, altered or enlarged or for which either a site or structure is or may be occupied and maintained.~~**Use** – Any purpose for which a lot, building, or other structure or a tract of land may be designated, arranged, intended, maintained, or occupied; or any activity, occupation, business, or operation carried on or intended to be carried on in a building or other structure or on a tract of land.

~~**Use, Conditional** - a use which is listed as a conditional use in any given district in this ordinance. Conditional uses may be required to meet certain requirements as a condition precedent to the granting of a use permit which will allow the establishing of a conditional use in any given district.~~**Use, Conditional** – A use of property that may be permitted only bye conditional use permit and which use must comply with all terms and conditions of the permit.

~~**Use, Permitted** - a use which is listed as a permitted use in any given district in this ordinance. Permitted uses may not meet special requirements as a condition precedent to be allowed to establish in a given district, except as may be required by the provisions of this ordinance.~~**Use, Permitted** – A use permitted in a district without the need for special administrative review and approval, upon satisfaction of the standards and requirements of this ordinance.

Variance - (see Arizona Revised Statutes, Section 9-462, and Section 305 of this Ordinance).

Vineyard - is an area of land planted with cultivated grapevines.

Viniculture - is the science, cultivation and study of grapes which deals with the series of events that occur in a vineyard, which vineyard produces grapes specifically for winemaking, whether for commercial, non-commercial or domestic use. The term "viniculture" shall not apply to plantings of one hundred (100) vines or less.

Wall - any structure or device forming a physical barrier which is so constructed that fifty (50) percent or more of the vertical surface is closed preventing the passage of light, air and vision through said surface.

Warehouse - a building or buildings used for the commercial storage of goods, where no retail or wholesale operations are conducted at the site.

Wholesale - the sale of goods or materials for the purposes of resale.

Water System, Community - a water supply system publicly or privately owned having an authorized permit, which serves the needs of the residents.

~~**Yard** - open and unoccupied space on a lot or parcel.~~**Yard** – An open space at grade between a building and the adjoining lot line, unoccupied or unobstructed by any portion of a structure from the ground upward, except as otherwise provided in this ordinance.

Yard, Front - a yard, the depth of which is the minimum required horizontal distance between the front line and a line parallel thereto on the lot, which yard extends across the full width of the lot.

Yard, Rear - a yard, the depth of which is the minimum required horizontal distance between the rear lot line and a line parallel thereto on the lot, which yard extends across the full width of the lot.

Yard, Side - a yard, the width of which is the minimum required horizontal distance between the side lot line and a line parallel thereto on the lot, not including any portion of required front yard or required rear yard.

Zone - a district classification established by this ordinance which limits or permits various and specific uses.

Zone District - a zone area in which the same zoning regulations apply throughout the district.

Zoning Area – The area within one hundred fifty feet, including all rights-of-way, of the affected property subject to the proposed amendment or change and the area of the proposed amendment or change.

[Ord. No. 374; Ord. No. 408; Ord. No. 442; Ord. No. 446; Ord. No. 454; Ord. No. 465; Ord. No. 470; Ord. No. 474]

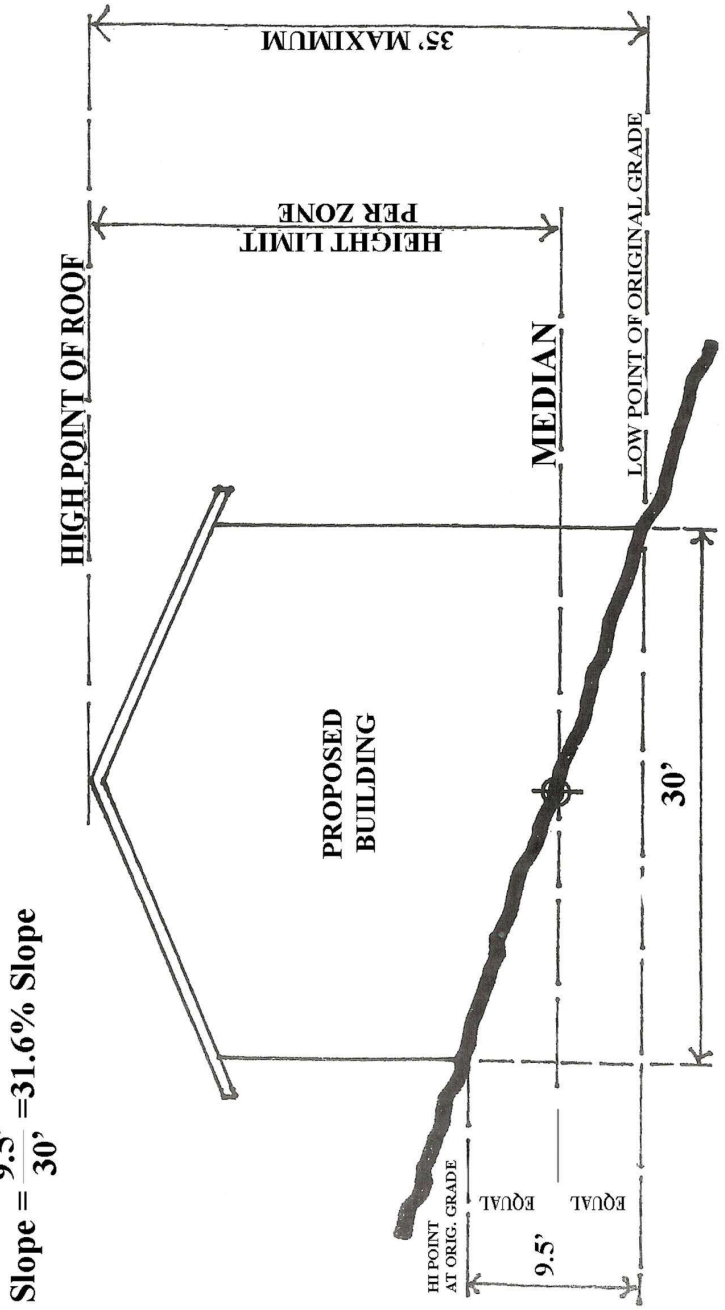

Slope = $\frac{9.5'}{30'}$ =31.6% Slope

(SITE SECTION)

DIAGRAM 1

BB 1.98

SLOPE = $\frac{18'}{40'}$ =45% AVERAGE SLOPE

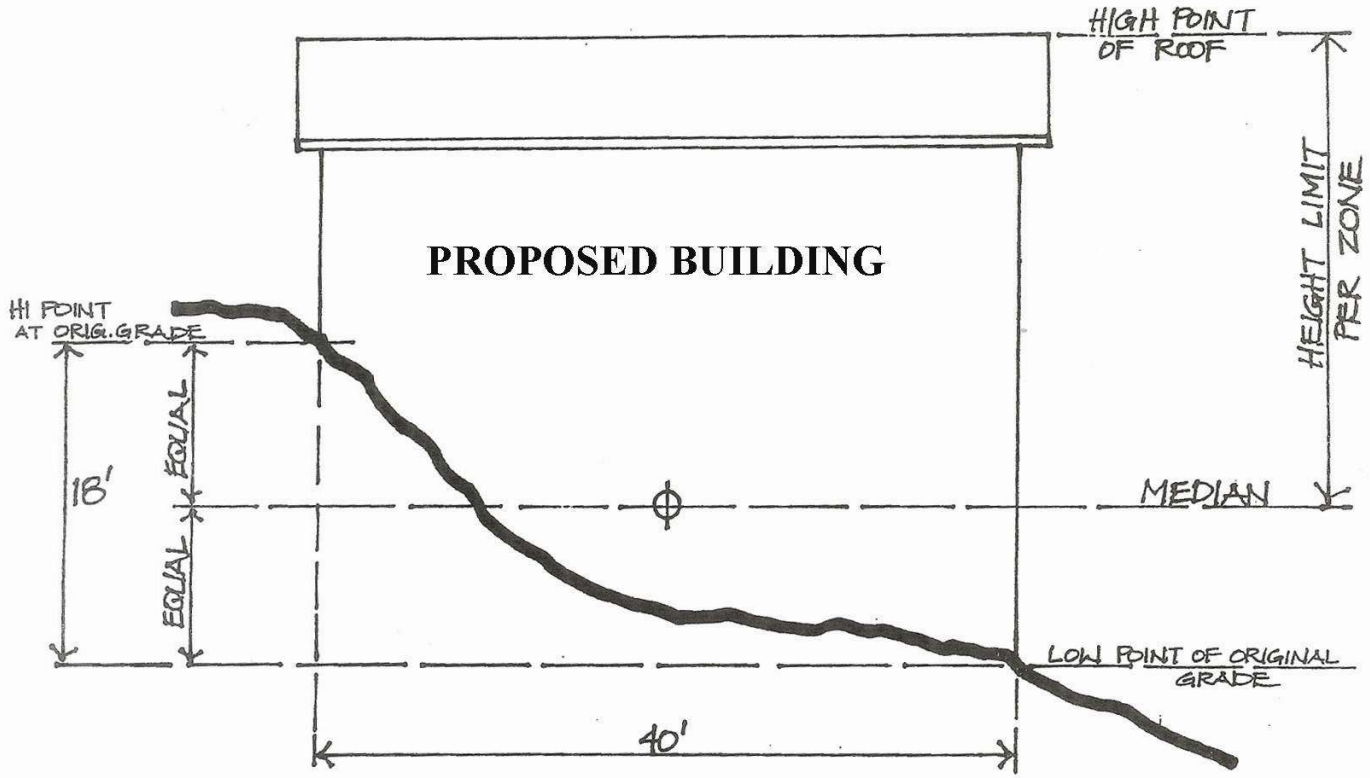

DIAGRAM 2
BB 1-98

(SITE SECTION)

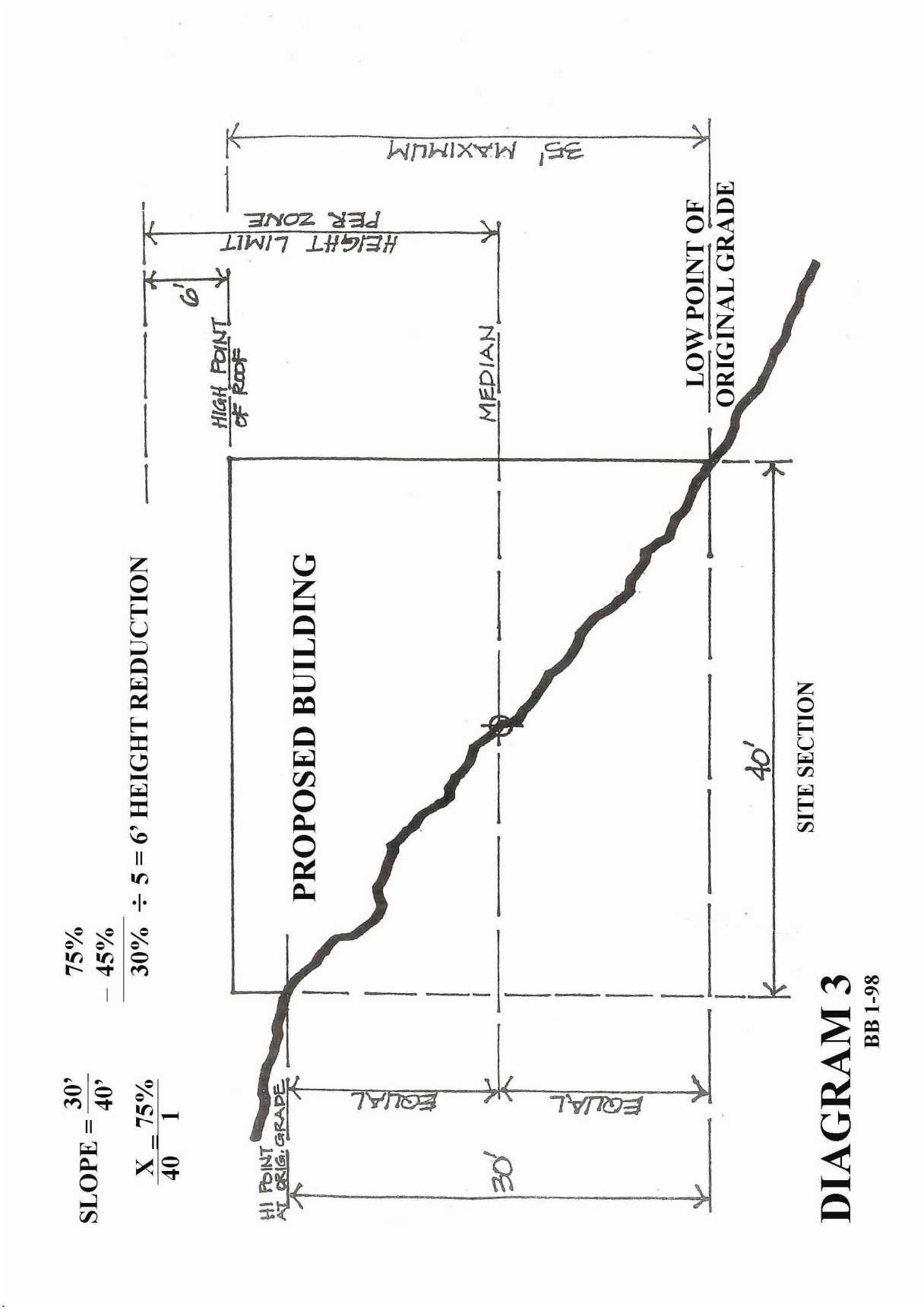
SLOPE = 30'/40'
X = 75%/40 1
75%
– 45%
30% ÷ 5 = 6' HEIGHT REDUCTION
35' MAXIMUM
HEIGHT LIMIT PER ZONE
6'
HIGH POINT OF ROOF
MEDIAN
LOW POINT OF ORIGINAL GRADE
PROPOSED BUILDING
HI POINT AT ORIG. GRADE
EQUAL
EQUAL
30'
40'
SITE SECTION
DIAGRAM 3
BB 1-98

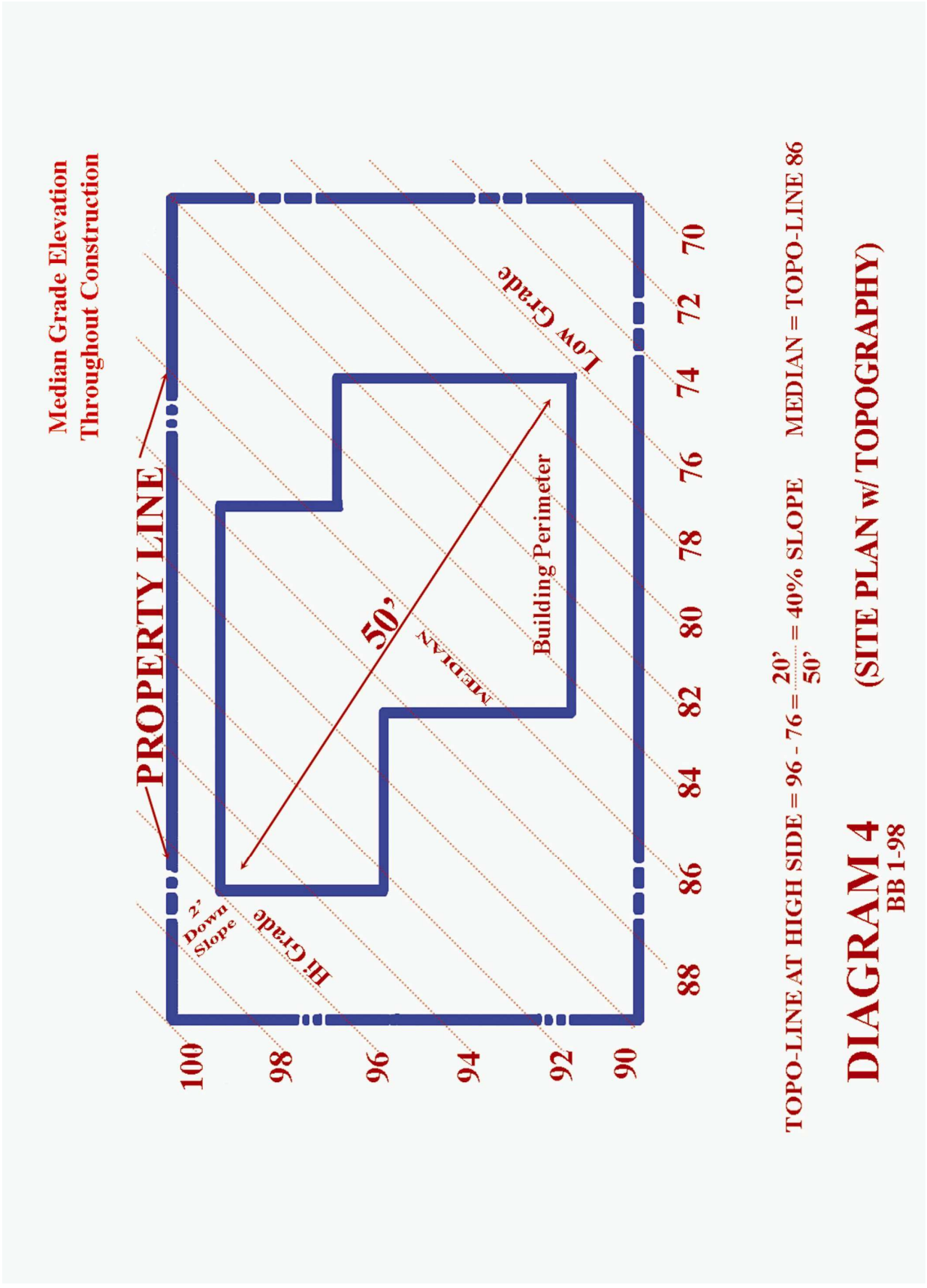
Median Grade Elevation
Throughout Construction
PROPERTY LINE
2' Down Slope
Hi Grade
Low Grade
50'
MEDIAN
Building Perimeter
100
98
96
94
92
90
88
86
84
82
80
78
76
74
72
70
TOPO-LINE AT HIGH SIDE = 96 - 76 = 20'/50' = 40% SLOPE
MEDIAN = TOPO-LINE 86
DIAGRAM 4
BB 1-98
(SITE PLAN w/ TOPOGRAPHY)

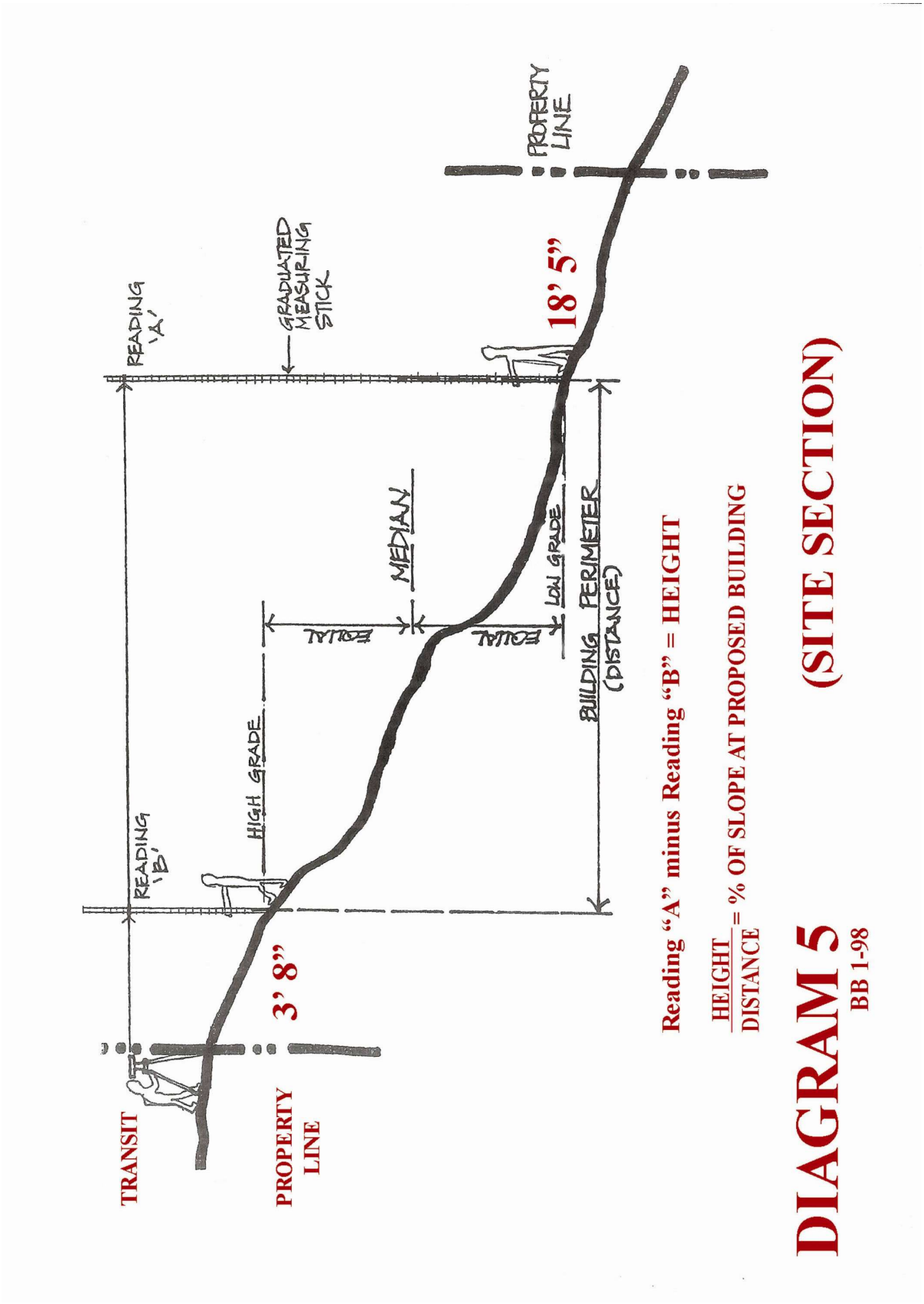
TRANSIT
PROPERTY LINE
3' 8"
READING 'B'
HIGH GRADE
EQUAL
MEDIAN
EQUAL
LOW GRADE
BUILDING PERIMETER (DISTANCE)
READING 'A'
GRADUATED MEASURING STICK
18' 5"
PROPERTY LINE
Reading "A" minus Reading "B" = HEIGHT
HEIGHT / DISTANCE = % OF SLOPE AT PROPOSED BUILDING
DIAGRAM 5
BB 1-98
(SITE SECTION)

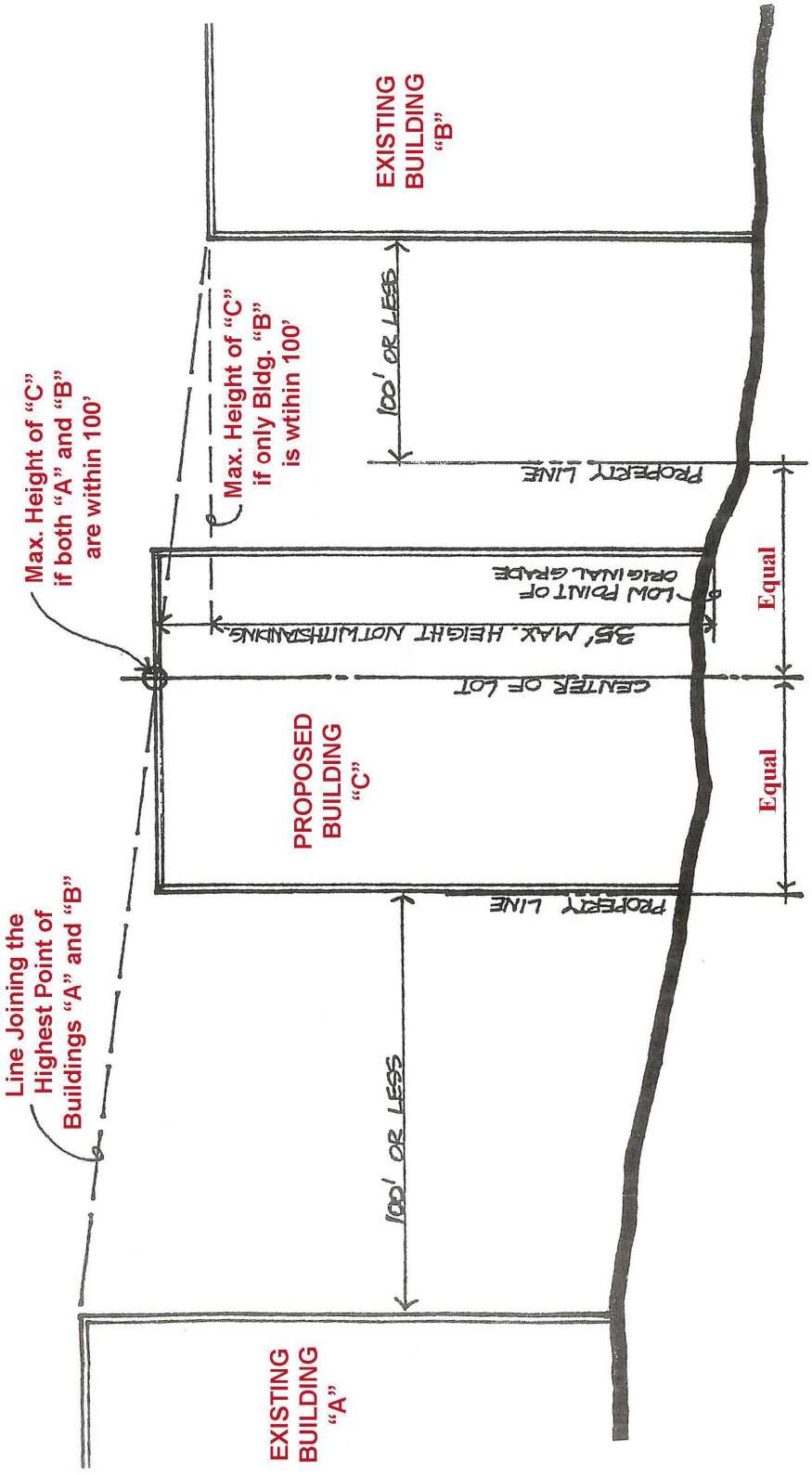

DIAGRAM AT C-1 ZONE ONLY

Elevation View

BB '98

502.1 Appendix A - Total Lighting Output

Lighting Zones

Zone 0

- Applies to areas in which permanent lighting is not expected or, use is limited to the amount of lighting and period of operation.
- Includes undeveloped areas, wilderness parks and preserves, astronomical observatories, or areas where a dark environment is critical
- Special review should be required for any permanent lighting in this zone.
- If lighting is used, it is typically Class 3 lighting or Class 2 ground illumination lighting.

Zone 1

- Areas that desire low ambient lighting levels.
- Typically single and two family residential communities, rural town centers, business parks and agricultural areas.
- May also include developed areas in parks or other natural settings.
- Can be Class 2 or Class 3 Lighting.

Zone 2

- Areas with moderate ambient lighting levels.
- Typically multifamily residential use, institutional residential use, schools, churches, hospitals, hotels/motels, recreation facilities, and commercial or business districts with moderate nighttime activities.
- Can be used to accommodate outdoor sales or light industry in an area other than LZ-1
- Can be Class 1, Class 2, or Class 3 Lighting.

Zone 3

- Areas with moderately high lighting levels.
- Typically include commercial corridors, high intensity suburban commercial areas, town centers, mixed use areas, industrial and shipping and rail yards with high nighttime activity.
- Can also include High use recreational facilities and playing fields, regional shopping malls, car dealerships, gas stations and other nighttime active retail areas.
- Can be Class 1, Class 2, or Class 3 Lighting

Zone 4

- Areas with High Ambient lighting levels
- Should only be used for special cases and is not appropriate for most cities.
- May be used for unusual installations such as high density entertainment, heavy industrial use, or major manufacturing.
- Typically only Class 1 lighting is used in this Zone.
- Currently there are no known uses for this Class or Zone within the limits of the Town of Jerome.

502.1 Appendix A - Total Lighting Output

Lighting Applications

Residential/Agricultural Application	LZ 0	LZ 1	LZ 2	LZ 3	LZ 4
Allowed Lumens ***Per SF***	0.5	1.25	2.5	5.0	7.5
Allowed Base Lumens ***Per Site***	0	3,500	7,000	14,000	21,000
Residential Max Allowed Luminaire Lumens* for ***Unshielded Luminaires at one entry***	0	420	630	630	630
Residential Max Allowed Luminaire Lumens* for ***Fully Shielded Luminaire***	630	1,260	1,260	1,260	1,260
Residential Max Allowed Luminaire Lumens* for ***Unshielded Luminaires Excluding Main Entry***	0	315	315	315	315
Residential Max Allowed Luminaire Lumens* for each ***Shielded Directional Flood Lighting***	0	0	1,260	2,100	2,100
Residential Max Allowed Luminaire Lumens* for each ***Low Voltage Landscape*** Lighting	0	315	525	525	525
Residential Max Allowed Luminaire Lumens* for each ***Landscape Lighting***	0	0	1,050	2,100	2,100

* Luminaire Lumens equals Initial Lamp Lumens for a lamp, multiplied by the number of lamps in the luminaire.

Commercial Application	LZ 0	LZ 1	LZ 2	LZ 3	LZ 4
Allowed Lumens ***Per SF***	0.5	1.25	2.5	5.0	7.5
Allowed Base Lumens ***Per Site***	0	3,500	7,000	14,000	21,000
Non-Residential Outdoor Lighting (Hardscape Area Method) Base Allowance	.5/SF of Hardscape	1.25/SF of Hardscape	2/SF of Hardscape	5/SF of Hardscape	7/SF of Hardscape
Commercial Building Entrances/Exits (Allowance is per door. Luminaires must be within 20 feet of the door)	400	1,000	2,000	4,000	6,000
Commercial Building Facades (Allowance is lumens per unit area of building façade that are illuminated. Luminaires must be aimed at the façade and capable of illuminating it without obstruction.)	0	0	8/SF	16/SF	24/SF
Canopies (Allowance is lumens per unit area for total area within drip line of canopy. To use allowance luminaires must be located under the canopy.)	0	3/SF	6/SF	12/SF	18/SF
Outdoor Dining (allowance is lumens per unit area for the total illuminated hardscape of outdoor dining. Luminaires must be within 2 mounting heights of the hardscape are of outdoor dining.)	0	1/SF	5/SF	10/SF	15/SF

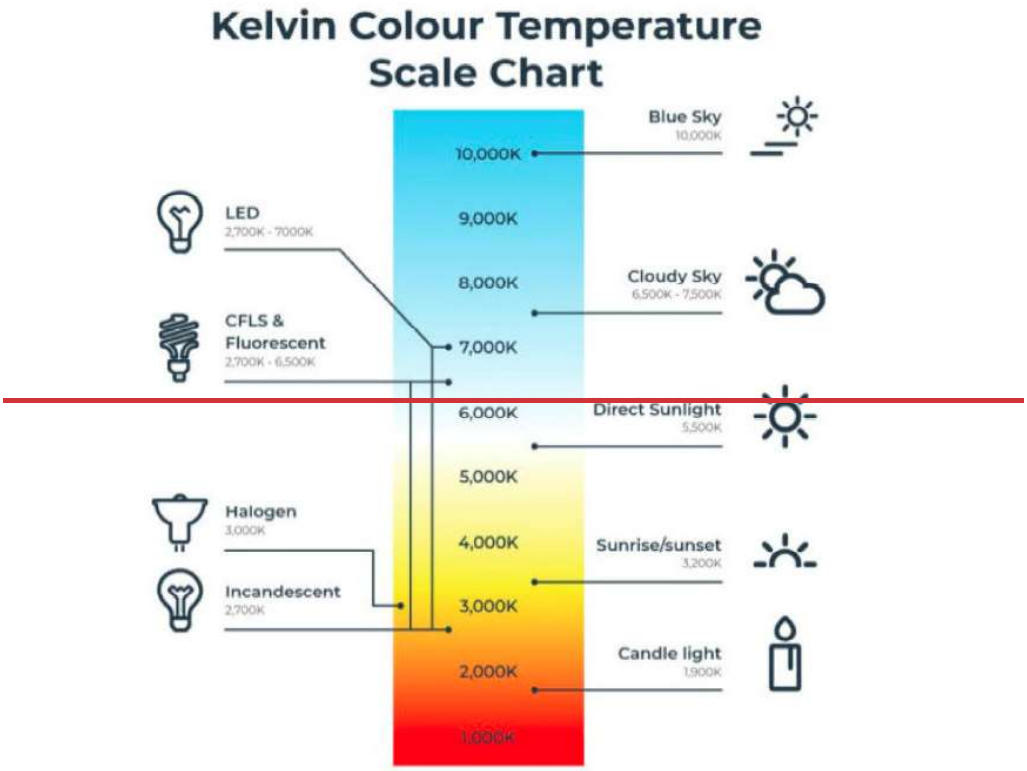
Kelvin Colour Temperature Scale Chart
10,000K
9,000K
8,000K
7,000K
6,000K
5,000K
4,000K
3,000K
2,000K
1,000K
Blue Sky
10,000K
Cloudy Sky
6,500K - 7,500K
Direct Sunlight
5,500K
Sunrise/sunset
3,200K
Candle light
1,900K
LED
2,700K - 7000K
CFLS & Fluorescent
2,700K - 6,500K
Halogen
3,000K
Incandescent
2,700K

JEROME ZONING ORDINANCE

AS REVISED FEBRUARY 1997

AND UPDATED THROUGH OCTOBER 2026

UPDATES:

UPDATE	ORDINANCES INCLUDED	UPDATED BY
9/10/2012	290 (original re- adopting ordinance); 293, 298, 301,313,324,340,343,374,378, 380 *(Typographical error in Section 303.1 E corrected 1/14/2013)*	Candace B. Gallagher, CMC
12/17/2013	406, 407, 408 In addition, REMOVED provisions of Ordinance 343, which was repealed by voters in 2008, and reversed renumbering of Sections 503-511 that had been renumbered with that ordinance. Numeric references to those sections were corrected as well.	Candace B. Gallagher, CMC
10/2/2014	410	Candace B. Gallagher, CMC
1/30/19	442, 445	Candace B. Gallagher, CMC
2/21/19	446	Candace B. Gallagher, CMC
6/26/19	451	Candace B. Gallagher, CMC
9/17/19	453, 454	Candace B. Gallagher, CMC
11/6/19	457	Candace B. Gallagher, CMC
1/15/20	459	Candace B. Gallagher, CMC
8/31/20	460	Candace B. Gallagher, CMC
6/8/21	465, 472	Candace B. Gallagher, CMC
7/8/21	470	Candace B. Gallagher, CMC
10/20/21	474	Candace B. Gallagher, CMC
2/28/22	477	Candace B. Gallagher, CMC
3/29/22	478	Candace B. Gallagher, CMC
7/10/24	490	Candace B. Gallagher, CMC
10/13/26	497	The Planning Center

JEROME ZONING ORDINANCE 1997

COUNCIL
Paul Gross – Mayor
Alfredo Gutierrez
James A. Rome
Leo Sullivan
Helen Jane Troyer

PLANNING COMMITTEE
Richard Martin – Chairman
Larry Ahern – Vice Chairman
Mary Marc Armstrong
Barbara Hogan
John McNerney
Michael Smith
Jon Tudan

NACOG COMMUNITY PLANNING STAFF
Gary Millam – Division Chief
Matt Winkel – Project Mgr.
Ramon Bazurto – Graphics
Dolores Gonzales – Secretary
Alexandra Gallardo – Secretary

Northern Arizona Council of Governments

ORDINANCE NO. 177

ADOPTED JUNE 14, 1977

AN ORDINANCE OF THE MAYOR AND COUNCIL OF THE TOWN OF JEROME, ARIZONA, IMPOSING REGULATIONS, PROHIBITIONS, AND RESTRICTIONS FOR THE PROMOTION OF HEALTH, SAFETY, CONVENIENCE, AND WELFARE; REGULATING AND RESTRICTING HEIGHT, NUMBER OF STORIES, SIZE OF BUILDINGS AND OTHER STRUCTURES, THE PERCENTAGE OF LOT THAT MAY BE OCCUPIED, THE SIZE OF YARDS, COURTS, AND OTHER OPEN SPACES, THE DENSITY OF POPULATION, THE LOCATION AND USE OF BUILDINGS, STRUCTURES, AND LAND FOR TRADE, INDUSTRIAL, COMMERCIAL, RESIDENTIAL OR OTHER PURPOSES; ESTABLISHING STANDARDS OF PERFORMANCE AND DESIGN; AND FOR SUCH PURPOSES DIVIDING THE TOWN INTO DISTRICTS OF SUCH NUMBER, SHAPE, AND AREA AS MAY BE DEEMED BEST SUITED FOR THE PURPOSES HEREOF; AND ADOPTING A MAP OF SAID DISTRICTS; CREATING BOARDS AND DEFINING THE POWERS AND DUTIES OF SAID BOARDS; PRESCRIBING PROCEDURES FOR CHANGES OF DISTRICTS, CONDITIONAL USE PERMITS, VARIANCES, AND OTHER PERMITS; PRESCRIBING PENALTIES FOR VIOLATIONS OF SAID ORDINANCE; AND DECLARING AN EMERGENCY.

WHEREAS, it has been found necessary for the welfare of the Town of Jerome that a Zoning Ordinance shall be enacted; and

WHEREAS, by authority conferred by Title 9, Chapter 4, Article 6, Sections 1 through 6, Arizona Revised Statutes, 1956, and statutes amendatory thereto, the Town of Jerome is authorized and empowered to enact such an ordinance;

NOW, THEREFORE, BE IT ORDAINED BY THE COUNCIL OF THE TOWN OF JEROME as follows:

ZONING ORDINANCE OF THE TOWN OF JEROME

ARTICLE I: ADMINISTRATION **7**

SECTION 101. SHORT TITLE 7
SECTION 102. PURPOSE 7
SECTION 103. INTERPRETATION AND APPLICATION 7
SECTION 104. COMPUTATION OF TIME 7
SECTION 105. PLANNING AND ZONING COMMISSION 7
SECTION 106. BOARD OF ADJUSTMENT 8
SECTION 107. HISTORIC PRESERVATION/DESIGN REVIEW BOARD 10
SECTION 108. ZONING ADMINISTRATOR 11
SECTION 109. ENFORCEMENT 11
SECTION 110. VIOLATION AND PENALTY 11
SECTION 111. SEVERABILITY 11

ARTICLE II: DEFINITIONS [MOVED TO APPENDIX A WITH ORDINANCE 497] **12**

ARTICLE III: PROCEDURES **13**

SECTION 301. AMENDMENTS OR ZONE CHANGES 13
SECTION 302. CONDITIONAL USE PERMITS 16
SECTION 303.1. SITE PLAN REVIEW 19
SECTION 303.2. FINAL SITE PLAN REVIEW 22
SECTION 303.3. GRADING AND EXCAVATION REQUIREMENTS 23
SECTION 303.4. APPEALS AND EXPIRATION OF APPROVALS 25
SECTION 304. HISTORIC PRESERVATION/DESIGN REVIEW BOARD 27
SECTION 305. ADMINISTRATIVE APPEALS AND VARIANCES 33
SECTION 306. NEIGHBORHOOD MEETINGS 35
SECTION 307. PRE-APPLICATION MEETINGS 37

ARTICLE IV: ZONING DISTRICTS **38**

SECTION 401. ESTABLISHMENT OF ZONING DISTRICTS 38
SECTION 402. LOCATION AND BOUNDARIES OF DISTRICTS 38
SECTION 403. "AR" ZONE, AGRICULTURAL RESIDENTIAL 39
SECTION 404. "R1-10" ZONE, SINGLE FAMILY RESIDENTIAL 39
SECTION 405. "R1-5" ZONE, SINGLE FAMILY RESIDENTIAL 39
SECTION 406. "R-2" ZONE, SINGLE- AND TWO-FAMILY RESIDENTIAL 39
SECTION 407. "C–1" ZONE, GENERAL COMMERCIAL 40
SECTION 408. "I-1" ZONE, LIGHT INDUSTRIAL 40
SECTION 409. HISTORIC OVERLAY DISTRICT 41
SECTION 410. USE MATRIX 42
SECTION 411. USE/ZONE-SPECIFIC STANDARDS MATRIX 45
SECTION 412. DEVELOPMENT STANDARDS MATRIX 53

ARTICLE V: USE REGULATIONS **55**

SECTION 501. NONCONFORMING SITUATIONS 55
SECTION 502. GENERAL PROVISIONS 57
SECTION 502.1 GENERAL PROVISIONS – EXTERIOR LIGHTING 64
SECTION 503. "AR" ZONE, AGRICULTURAL RESIDENTIAL 76
SECTION 504. "R1-10" ZONE, SINGLE FAMILY RESIDENTIAL 76
SECTION 506. "R-2" ZONE, SINGLE- AND TWO-FAMILY RESIDENTIAL 76
SECTION 507. "C–1" ZONE, GENERAL COMMERCIAL 76
SECTION 508. "I-1" ZONE, LIGHT INDUSTRIAL 76
SECTION 509. SIGNS 77

SECTION 510. PARKING AND LOADING REQUIREMENTS 85
SECTION 511. HISTORIC OVERLAY DISTRICT 89
SECTION 512. LANDSCAPE REQUIREMENTS 89

ARTICLE VI: EMERGENCY CLAUSE 97

ARTICLE VII: SUBDIVISION REGULATIONS 98

SECTION 701. TITLE, PURPOSE, AND ADMINISTRATION 98
SECTION 702. GENERAL REQUIREMENTS AND PROCEDURES FOR SUBMISSION OF PLATS 100
SECTION 703. SPECIFICATIONS FOR PLANS AND PLATS 103
SECTION 704. HILLSIDE SUBDIVISIONS 108
SECTION 705. REVISIONS OF PLATS OR REPLATS 109
SECTION 706. ABANDONMENT OF A RECORDED SUBDIVISION OR REVERSION TO ACREAGE 109
SECTION 707. AMENDED SUBDIVISION MAPS 110
SECTION 708. SUBDIVISIONS WITHIN THREE (3) MILES OF TOWN 110
SECTION 709. DESIGN STANDARDS 111
SECTION 710. IMPROVEMENTS 118
SECTION 711. VARIANCE AND APPEALS 122
SECTION 712. LEGAL PROCEDURE, VIOLATION, PENALTIES AND REMEDIES 122
SECTION 713. AMENDMENTS 123
SECTION 714. ENFORCEMENT AND EFFECTUATION 123

APPENDICES 124

APPENDIX A DEFINITIONS 124

ARTICLE I: ADMINISTRATION

SECTION 101. SHORT TITLE

This ordinance shall be known as “The Zoning Ordinance of the Town of Jerome.”

SECTION 102. PURPOSE

The purposes of this ordinance are to secure safety from fire, panic, and other dangers; to provide adequate light and air; to lessen congestion in the streets; to prevent the overcrowding of land; to avoid undue concentration of population, to facilitate the adequate provision of transportation, water, sewerage, schools, parks, and other public requirements; to provide for the social, physical, and economic advantages resulting from comprehensive and orderly planned use of land resources; and to otherwise promote the health, safety, convenience and general welfare of the citizens of the Town of Jerome, Arizona.

SECTION 103. INTERPRETATION AND APPLICATION

In its interpretation and application, the provisions of this ordinance shall be held to be minimum requirements for the promotion of a general plan, and for the promotion of the public health, safety, and general welfare. It is not intended by this ordinance to repeal, abrogate, annul or in any way impair or interfere with existing provisions of other laws or ordinances, except those specifically repealed by this ordinance, or with restrictions placed upon property by covenant, deed, or other agreement between parties, provided that where this ordinance imposes a greater restriction on land, buildings or structures than is imposed or required by such existing provisions of law, ordinance, contract or deed, the provisions of this ordinance shall control.

A. DEFINITIONS

For the purpose of this ordinance, certain words and terms used herein are defined as follows: all words used in the present tense include the future tense; all words in the plural number include the singular number, all words in the singular number include the plural number, unless the natural construction of the wording indicates otherwise. The word “lot” includes the word “plot”; the word “building” includes the word “structure”; and the word “shall” is mandatory and not discretionary. Other words and phrases used in this ordinance shall have the meaning established in Appendix A: Definitions.

SECTION 104. COMPUTATION OF TIME

1. When calculating a period of time prescribed by this Ordinance, the day of the act, event, or decision that starts the time period is not counted.
2. Unless otherwise expressly stated, references to "days" mean calendar days.
3. If the final day of a period falls on a Saturday, Sunday, legal holiday, or other day when Town offices are closed, the period shall extend to the next business day.

SECTION 105. PLANNING AND ZONING COMMISSION

B. COMPOSITION; TERMS OF MEMBERS; VACANCIES; COMPENSATION OF MEMBERS

A Planning and Zoning Commission was established upon adoption of the Jerome Zoning Ordinance. At the adoption of this ordinance, the Commission shall consist of five (5) members, each of whom shall be a resident of the Town of Jerome to be appointed by the Town Council. The members of the Commission shall serve for three (3) years, except as provided by this Ordinance. In the event of a death, resignation, or removal from the Commission, the vacancy shall be filled by the Council for the unexpired term. Members of the Commission may, after a public meeting, be removed by the Council for inefficiency, neglect of duty, or unethical conduct in office. A Commission member who is absent four (4) regular meetings of a year, beginning March 1st and ending February 28th, shall be deemed to have vacated their appointment without further action being taken by the Commission or Council. All members shall serve without pay. However, members

of the Commission may be reimbursed for actual expenses incurred in connection with their duties upon authorization or ratification by the Commission and approval of such expenditures by the Town Council.

[Ord. No. 313; Ord. No. 445]

C. POWERS AND DUTIES

The Planning & Zoning Commission shall:

1. Prepare and administer any lawful plan duly adopted by the Council for the present and future growth and development of the Town of Jerome pertaining to the use of land and buildings;
2. Conduct ongoing studies of the best present and future use and location for land and buildings within the Town of Jerome and in cooperation with adjacent areas;
3. Recommend to the Council revisions in such plans which, in the opinion of the Commission, are in the best interest of the citizens of the Town of Jerome;
4. Hold public hearings where necessary;
5. Make recommendations to the Council on all matters concerning or relating to the creation of zoning districts, the boundaries thereof, the appropriate regulations to be enforced therein, and amendments of this ordinance;
6. Carry out the specific duties as prescribed by this ordinance, and undertake all activities usually associated with and commonly known as “Planning and Zoning”. The Commission is also authorized to confer and advise with other city, county, regional, or state planning commissions.

D. SELECTION OF OFFICERS

The Commission shall elect a Chair and Vice Chair from among its own members, who shall serve for one (1) year and until their successors are elected and qualified. No individual may serve consecutively as Chair or as Vice Chair for more than two one-year terms. The Chair shall preside at all meetings and exercise all the usual rights, duties, and prerogatives of the head of any similar organization. The Chair shall have the power to administer oaths and to take evidence. The Vice Chair shall perform the duties of the Chair in the latter’s absence or disability. Vacancies created by any cause shall be filled for the unexpired term by a new election.

[Ord. No. 410]

E. QUORUM; VOTING

Three (3) members shall constitute a quorum. The affirmative vote of three (3) members shall be required for passage of any matter before the Commission. The minutes of the meeting shall reflect the “ayes” and “nays” cast on a particular measure and shall reflect the vote of each member present. A member may abstain from voting upon a declaration that he has a conflict of interest, in which case such member shall take no part in the deliberation on the matter in question.

[Ord. No. 313]

F. RULES; REGULATIONS; RECORDS; MEETINGS

The Commission shall make and publish rules and regulations governing its proceedings and meetings, subject to Council approval. All meetings of the Commission shall be open to the public. The minutes and records of all Commission proceedings shall be kept and filed as public record in the office of the Town Clerk.

SECTION 106. BOARD OF ADJUSTMENT

A. ESTABLISHMENT; COMPOSITION; TERM OF MEMBERS; VACANCIES; COMPENSATION OF MEMBERS

There is hereby established a Board of Adjustment of the Town of Jerome, to consist of five (5) members, each of whom shall be a resident of the Town of Jerome, to be appointed by the Town Council. The members of the Board shall serve for three (3) years, except as provided in this Ordinance. The members of the first Board appointed hereunder shall serve for the following terms:

two (2) members shall be appointed for a term of one (1) year, two (2) members shall be appointed for a term of two (2) years, and one (1) member shall be appointed for a term of three (3) years. In the event of a death, resignation, or removal from the Board, the vacancy shall be filled by the Council for the unexpired term. Members of the Board may, after a public hearing, be removed by the Council for inefficiency, neglect of duty, or malfeasance in office. For any reason other than absence, the Council shall file a written statement of the reasons for removal. A Board member who is absent four (4) regular meetings of a year, beginning March 1st and ending February 28th, shall be deemed to have vacated their appointment without further action being taken by the Board or Council. All members shall serve without pay. However, members of the Board may be reimbursed for actual expenses incurred in connection with their duties upon authorization or ratification by the Board and approval of such expenditures by the Town Council.

[Ord. No. 445]

B. POWER AND DUTIES

1. It shall be the duty of the Board of Adjustment to:
    a. Hear and decide appeals in which it is alleged there is an error in an order, requirement, or decision made by the Zoning Administrator in the enforcement of the zoning ordinance, and to reverse or affirm, wholly or partly, or modify the order, requirement, or decision of the Zoning Administrator appealed from, and make such order, requirement, decision or determination as necessary.
    b. Hear and decide appeals for variances from the terms of the zoning ordinance only if, because of special circumstances applicable to the property, including its size, shape, topography, location, or surroundings, the strict application of the zoning ordinance will deprive such property of privileges enjoyed by other property of the same classification in the same zoning district. Any variance granted is subject to such conditions that will assure that the authorized adjustment shall not constitute a grant of special privileges inconsistent with the limitations upon other properties in the vicinity and zoning in which such property is located.
2. The Board of Adjustment may not:
    a. Make any changes in the uses permitted in any zoning classification or zoning district, or make any changes in the terms of the zoning ordinance, provided the restrictions in this paragraph shall not affect the authority to grant variances pursuant to this article.
    b. Grant a variance if the special circumstances applicable to the property are self-imposed by the property owner.

C. SELECTION OF OFFICERS

The Board shall elect a Chair and Vice Chair from among its own members, who shall serve for one (1) year and until their successors are elected and qualified. The Chair shall preside at all meetings and exercise all the usual rights, duties, and prerogatives of the head of any similar organization. The Chair shall have the power to administer oaths and to take evidence. The Vice Chair shall perform the duties of the Chair in the latter's absence or disability. Vacancies created by any cause shall be filled for the unexpired term by a new election.

[Ord. No. 410]

D. QUORUM; VOTING

Three (3) members shall constitute a quorum. The affirmative vote of three (3) members shall be required for passage of any matter before the Board. In this connection, the minutes of the meeting shall reflect the "ayes" and "nays" cast on a particular measure and shall reflect the vote of each member present. A member may abstain from voting only upon a declaration that he has a conflict of interest, in which case such member shall take no part in the deliberation on the matter in question.

E. RULES; REGULATIONS; RECORDS; MEETINGS

The Board shall make and publish rules and regulations to govern its proceedings and to provide for its meetings. All meetings of the Board shall be open to the public. The minutes and records of all Board proceedings shall be kept and filed as public record in the office of the Town Clerk.

SECTION 107. HISTORIC PRESERVATION/DESIGN REVIEW BOARD

A. PURPOSE

The purpose of the Historic Preservation/Design Review Board is to review the exterior design of new buildings and structures, the alteration of buildings and structures, signs, and proposed demolition of structures, in order to ensure that new development is compatible with the surrounding environment, and to preserve and protect the historic character of the Town of Jerome in accordance with the provisions of Section 304.

[Ord. No. 470]

B. COMPOSITION; TERMS OF MEMBERS; VACANCIES; COMPENSATION OF MEMBERS

The Historic Preservation/Design Review Board of the Town of Jerome shall be composed of five (5) members. The membership shall consist of five (5) residents of Jerome, who shall be persons qualified by design background, training, or experience, to be appointed by the Town Council. Each member shall serve for a term of three (3) years. Members may, after a public meeting, be removed by the Council for inefficiency, neglect of duty, or unethical conduct in office. A Board member who is absent four (4) regular meetings of a year, beginning March 1st and ending February 28th, shall be deemed to have vacated their appointment without further action being taken by the Board or Council. In the event of death or resignation, or removal from the Board, the vacancy shall be filled by the Council for the unexpired term. All members shall serve without pay. However, members of the Board may be reimbursed for actual expenses incurred in connection with their duties upon authorization or ratification by the Board and approval of such expenditures by the Town Council.

[Ord. No. 313; Ord. No. 378; Ord. No. 410; Ord. No. 445; Ord. No. 459]

C. POWERS AND DUTIES

1. The Historic Preservation/Design Review Board shall have the power to approve, conditionally approve, or disapprove all requests for design approval as required by this Ordinance, basing its decision on the criteria as set forth in Section 304.
2. It shall be the responsibility of the applicant to prove that the intent and purpose established in this Section will be accomplished.
3. The Historic Preservation/Design Review Board, upon hearing an application, may impose such reasonable conditions as it may deem necessary in order to fully carry out the provisions and intent of this ordinance. Violation of any such condition shall be a violation of this ordinance, and such violation shall render any building permit null and void.

D. SELECTION OF OFFICERS

The Board shall elect a Chair and Vice Chair from among its own members, who shall serve for one (1) year and until their successors are elected and qualified. No individual may serve consecutively as Chair, or as Vice Chair, for more than two one-year terms. The Chair shall preside at all meetings and exercise all the usual rights, duties, and prerogatives of the head of any similar organization. The Chair shall have the power to administer oaths and to take evidence. The Vice-Chair shall perform the duties of the Chair in the latter's absence or disability. Vacancies created by any cause shall be filled for the unexpired term by a new election.

[Ord. No. 410]

E. QUORUM; VOTING

Three (3) members shall constitute a quorum. The affirmative vote of three (3) members shall be required for the passage of any matter before the Board. The minutes of the meeting shall reflect the "ayes" and "nays" cast on a particular measure and shall reflect the vote of each member present. A member may abstain from voting upon declaration that he has a conflict of interest, in which case such member shall take no part in the deliberation on the matter in question.

[Ord. No. 313]

F. RULES; REGULATIONS; RECORDS; MEETINGS

The Board shall make and publish rules and regulations governing and providing for its proceedings and meetings, subject to Council approval. All meetings of the Board shall be open to the public. The minutes and records of all Board proceedings shall be kept and filed as public record in the office of the Town Clerk.

SECTION 108. ZONING ADMINISTRATOR

A. CREATION; APPOINTMENT

There is hereby created the office of Zoning Administrator of the Town of Jerome, who shall be appointed from time to time by the Mayor and Council.

B. POWERS AND DUTIES

The Zoning Administrator shall:

1. Enforce the Zoning Ordinance.
2. Accomplish all administrative actions required by the Ordinance.
3. Undertake preliminary negotiation with, and provide advice to, all applicants for zoning adjustment action, use permits, design review, or other action of the Planning and Zoning Commission or Historic Preservation/Design Review Board.
4. Subject to general and specific policy laid down by the Planning and Zoning Commission and Town Council, interpret the Zoning Ordinance to members of the public, Town departments, and other branches of government.

SECTION 109. ENFORCEMENT

The Zoning Administrator shall enforce this ordinance, and in no case shall grant permission for the issuance of any permit for the construction, reconstruction, alteration, demolition, movement, or use of any building, structure, lot, or parcel if the proposed construction, reconstruction, alteration, or use would be in violation of any of the provisions of this ordinance. A permit may be issued despite such a violation only if the Board of Adjustment, through an interpretation of this ordinance or the granting of a variance, directs the Zoning Administrator to do so.

SECTION 110. VIOLATION AND PENALTY

It is hereby declared to be unlawful to construct, erect, install, alter, change, demolish, maintain, or use any house, building, structure, or fence, or to use any lot or premise contrary to or in violation of any provision of this ordinance. Violations of any provision of the Zoning Ordinance of the Town of Jerome are subject to Chapter 18 Enforcement Procedures for Violations of the Town Code and Zoning Ordinance. Every such person, firm, or corporation shall be deemed guilty of a separate offense for each and every day in which such violation is committed, continued, or permitted, and shall be punished as provided in this section.

SECTION 111. SEVERABILITY

If any part of “The Zoning Ordinance of the Town of Jerome” is found to be invalid or unconstitutional by any Court, such action shall not apply to the ordinance as a whole. It is intended and declared that all parts of said “Zoning Ordinance of the Town of Jerome” shall continue in full force and effect except for those expressly declared to be invalid or unconstitutional.

ARTICLE II: DEFINITIONS [REMOVED]

[CODIFIER'S NOTE: This Article was rewritten with Ordinance 497 and moved to Appendix A.]

ARTICLE III: PROCEDURES

SECTION 301. AMENDMENTS OR ZONE CHANGES

A. PURPOSE

The Council may, from time to time, adopt changes to the zoning district boundaries or amend, change, repeal, or supplement the regulations of the Zoning Ordinance of the Town of Jerome. Such change or amendment may be initiated by the Council or the Commission on its own motion or by petition of one or more owners of real property within the area proposed to be changed.

B. PETITIONS FOR AMENDMENTS OR ZONE CHANGES

1. Petitions for change of district boundaries or amendment of regulations shall be filed with the Zoning Administrator by an owner of real property within the area proposed to be changed. Per Section 307, a pre-application meeting with Town Staff is required prior to submittal of an application. In the case of an application requesting a zoning district change that includes property owned by others, not including the petitioner, the petition shall include the signatures of all real property owners of the land in the area proposed to be changed. All petitions shall include:

    a. A map showing the particular property or properties for which the change of zone is requested and adjoining properties, public streets, and rights-of-way within three hundred (300) feet of the exterior boundary of the area proposed to be changed.

    b. A Tentative Development Plan, which shall show the following:

        1) Topography.

        2) Proposed street system.

        3) Proposed block layouts.

        4) Proposed reservation for parks, parkways, playgrounds, recreation areas, and other open spaces.

        5) Off-street parking space.

        6) Types and uses of structures.

        7) Locations of structures, garages, and/or parking spaces.

        8) A tabulation of the total number of acres in the proposed project and a percentage thereof designated for the proposed structures.

        9) Preliminary plans and elevations of the structure types.

    c. Reasons justifying the petition;

    d. A true statement revealing any conditions or restrictions of record which would affect the permitted “uses” of the property if rezoned as requested and the dates of expiration thereof; and

    e. Such photographs, drawings, and other supporting documents as the applicant may desire to present.

    f. Payment of a filing fee in an amount established by a schedule adopted by resolution of the Council and filed in the offices of the Town Clerk. No part of the filing fee shall be returnable. Payment of the filing fee shall be waived when the change or amendment is initiated by the Council or the Commission or when the petitioner is the Town, County, State, or Federal government.

2. Within fourteen (14) days of receipt of an application, the Zoning Administrator shall determine the completeness of the application. If the application is incomplete, the Zoning Administrator shall provide the applicant with a comprehensive list of the specific deficiencies in a written notice. A resubmittal of an incomplete application shall be reviewed for completeness within seven (7) days. If the application is determined to be complete, the Zoning Administrator shall forward the application to the Planning and Zoning Commission after conducting a substantive review of the complete application materials.
3. Any plan approved by the Zoning Administrator under the provisions of Section 303 must substantially conform to the Tentative Development Plan submitted as part of the petition for a change of district boundaries.

C. COMMISSION ACTION

1. Upon receipt of any complete application for, and prior to holding a public hearing on, actions that impose a new land use regulation or modify an existing land use regulation, a Neighborhood Meeting may be required in accordance with Section 306 of this zoning ordinance.
2. After a Neighborhood Meeting has been held, if applicable, in accordance with Section 306, the Zoning Administrator shall then choose a reasonable time for the hearing, and shall give notice to interested parties and to the public by publication of a notice in a newspaper of general circulation in the Town of Jerome, and by posting one notice of the hearing on the area of the property requesting the proposed change, not less than fifteen (15) days prior to the hearing. The notice shall set forth the time and place of the hearing, including a general explanation of the matter to be considered, and a general description of the area affected.
3. The Commission may recommend approval or denial to the Council, or continue the application and hearing to a time and place certain. The Commission shall render its decision in the form of a written recommendation to the Council, which may be via a request for Council action or via the transmission of the Commission meeting minutes to Council.
4. Prior to publishing a petitioned Zoning Map change, the Commission may, on its own motion, delimit or extend the boundaries of such area, so as to constitute a more reasonable zone district boundary.
5. The Commission may, on its own motion, propose any amendments to this ordinance and map. After holding a public hearing as required by this section, the Commission shall either:
    a. Transmit such proposal to the Council, which shall then proceed in accordance with the procedures of this Ordinance for any other amendment; or
    b. Vote to quash the Commission-initiated proposal, in which case no further action need be taken by the Commission or Council.

[Ord. No. 406]

D. COUNCIL ACTION

1. The Council shall, within forty-five (45) days after the Commission action, hold a public hearing on the request. Notice of the time and place of the hearing shall be provided in accordance with Section 301.C.2 of this Ordinance. In addition, the Town may give notice of the hearing in such other manner as it may deem necessary or desirable.
2. If the owners of twenty (20) percent or more of the property within the zoning area, as defined by A.R.S. § 9-462.04 as the area within one hundred fifty feet, including all rights-of-way, of the affected property subject to the proposed amendment or change and the area of the proposed amendment or change, file a protest in writing against a proposed amendment or zone change, it shall not become effective except by the favorable vote of three-fourths (3/4) of all members of the Council. If any members of the Council are absent or unable to vote on such a question

because of a conflict of interest, then the required number of votes for passage of the question shall be three-fourths (3/4) of the remaining membership of the Council, providing that such required number of votes shall in no event be less than a majority of the full membership of the legally established governing body.

3. The Council may approve, deny, or continue the application and hearing to a time and place certain by a vote of a majority of the number of members of the Council who are present and qualified to vote on the matter. The Council may also remand a proposal recommended by the Commission back to the Commission for further consideration.

4. At the time of rezoning, the Council shall establish a schedule for development of the specific use or uses for which rezoning is requested. The staff recommendation for rezoning requests that involve a zoning violation is a one-year period. For rezoning requests that do not involve a zoning violation, a five-year time period is recommended. A five-year time extension may be requested if the initial five-year time period expires. Requesting a time extension initiates a staff review to determine whether the request should be approved or denied, and whether conditions should be revised to reflect new conditions or practice. New conditions may be added during the staff review. The time extension request shall be noticed for a public hearing and heard only by the Council in accordance with the standards of this section. The Town Council may grant a time extension for a period of five years or less from the most recent public hearing on the case. If, at the expiration of this period, the property has not been improved for the use for which it was conditionally approved, the Council may elect to close the rezoning, in which case, it shall revert to its former zoning classification upon legislative action.

[Ord. No. 453]

E. RECONSIDERATION OF DENIED AMENDMENTS

If a petition for an amendment is denied by the Council or is withdrawn after the Commission hearing, the Commission shall not consider the petition, or any other petition seeking the same amendment for the same property or any part of it, for a period of one (1) year from the date of such denial action. This restriction does not apply if the conditions upon which the original denial was based have changed.

F. EXCEPTIONS

In the event that a request for amendment concerns only the amendment of general requirements of this Ordinance, no signature of affected property owners or posting of property shall be required; provided, however, that all other provisions of this Section shall be complied with.

G. TIMEFRAME

The review periods specified in this Ordinance do not include time required for applicant responses, review of additional information, application revisions or corrections, and could vary due to public hearing notification requirements and other Town procedures. Review periods may be extended as reasonably necessary for projects involving complex technical, environmental, legal, or planning considerations.

SECTION 302. CONDITIONAL USE PERMITS

A. PURPOSE

It is the intent of this Ordinance to permit Conditional Uses in appropriate zoning districts, but only in locations within such districts that can be designed and developed in a manner that assures maximum compatibility with adjoining uses. It is the purpose of this Section to establish principles and procedures to provide guidance and control of such uses.

B. GENERAL REGULATIONS

1. Certain buildings, structures and uses of land may be authorized by the Commission as Permitted Conditional Uses in a given district subject to the provisions of this Ordinance. The Planning and Zoning Commission is empowered to make recommendations to the Town Council regarding granting or denying applications for use permits and to impose reasonable conditions upon them. Prior to becoming effective, all actions by the Planning and Zoning Commission concerning a use permit application must be acted upon by the Town Council in accordance with the provisions of subsection 302.E.

2. Any building, structure, or use existing on the effective date of this Ordinance which is reclassified by this Ordinance as a Permitted Conditional Use, within the zoning district in which it is located, shall be deemed to satisfy all conditions that would otherwise be imposed upon such use by this Ordinance. Its continued operation shall not be subject to issuance of a Conditional Use Permit; provided, however, to the extent that the building, structure, or use does not conform to the requirements of this Ordinance, it shall be considered nonconforming as described in Section 501, and its continuance shall be governed by all applicable nonconforming use regulations.

3. Every Conditional Use Permit issued shall be personal to the permittee and applicable only to the specific use and to the specific property for which it is issued. Use Permits may contain specific limitations on the scope, nature, and duration of the use, as well as transferability of the Use Permit, as deemed necessary to secure the objectives of this Ordinance. The conformance to special conditions imposed by the Permit, as well as compliance with other provisions of this Ordinance, shall be the responsibility of the property owner.

C. CONDITIONAL USE PERMIT APPLICATION

1. The application for a use permit shall be filed with the Zoning Administrator on a form prescribed by the Zoning Administrator.

2. The Zoning Administrator shall provide guidance to the applicant regarding the preparation of the application to ensure it satisfies the intent of this Section. When required by the Zoning Administrator, the application shall be accompanied by a detailed site plan prepared in accordance with Section 303.1, showing all information necessary to demonstrate that the proposed use will comply with all special conditions as well as other regulations and requirements of this Ordinance. The applicant shall furnish any additional information the Zoning Administrator may consider relevant to the evaluation of the application.

3. The application shall be reviewed in accordance with Section 301.B.2.

D. COMMISSION ACTION AND FINDINGS

1. Commission Action on Conditional Use Permit Applications is as outlined in Section 301.C, except that:

   a. In its review of the application, the Commission shall consider not only the nature of the use and the special conditions influencing its location in the particular district, but also the proposed location of buildings, parking and other facilities within the site, the amount of traffic likely to be generated and how it will be accommodated, and the influence that such factors are likely to exert on adjoining properties. The Commission may make such suggestions as it considers desirable to satisfy the intent of this Section. The applicant shall

furnish the Commission with any additional information it may consider relevant to the evaluation of the application.

b. In order to recommend approval of any use permit, the Commission must find that the establishment, maintenance, or operation of the use or building applied for will not be detrimental to the public health, safety, and general welfare of the Town and its citizens.

c. The Commission may designate such conditions in connection with the use permit as it deems necessary to secure the intent and purposes of this Ordinance and may require guarantees and evidence that such conditions are being or will be complied with.

d. If the Commission finds that the application and supporting data do not indicate that all applicable conditions and requirements of this Ordinance will be met, it shall recommend denial of the permit.

E. COUNCIL ACTION

1. The Council shall, within forty-five (45) days after the Commission action on a Conditional Use Permit, act on the recommendation of the Planning and Zoning Commission by either affirming, denying, or modifying the recommendation of the Planning and Zoning Commission. The Town Council may make a decision based on its own findings.
2. The Council may designate such conditions in connection with the permit as it deems necessary to secure the intent and purpose of this Ordinance and may require such guarantees and evidence that such conditions are being, or will be, complied with.
3. The Council's decision shall be final and shall become effective immediately. Notice of the decision shall be mailed to the applicant at the address shown in the application.
4. Failure of the applicant to comply with the conditions and safeguards that are a part of the terms under which a Conditional Use Permit is granted shall be deemed a violation of this Ordinance and punishable under Section 110.

[Ord. No. 470]

F. TIME LIMITS

1. Use permits become effective immediately upon action by the Town Council.
2. Any use permit issued by the Town Council shall be commenced within six (6) months from the date of Council ratification, and diligently pursued, otherwise it shall become null and void.
3. No person shall reapply for the same or substantially the same use permit on the same or substantially the same plot, lot, or parcel of land within a period of one (1) year from the date of denial or revocation of said use permit.
4. An extension of approval may be granted by the Town Council if the applicant files for the extension prior to the approval becoming void. The Town Council may grant up to two additional extensions provided the approval is in compliance with all ordinances and requirements in effect at the time of the extension request. An application for an extension shall be accompanied by a filing fee in an amount established by a schedule adopted by resolution of the Council and filed in the office of the Town Clerk.

[Ord. No. 470]

G. REVOCATION

Use permits granted in accordance with the provisions of this ordinance may be revoked if any of the conditions of terms of the permit are violated or if any law or ordinance is violated in connection with the permit.

The Zoning Administrator shall notify the permittee by both Certified Mail and First-Class Mail of a violation or the termination of a use permit. If no attempt to change the violation is made within

twenty (20) days of the date the Zoning Administrator sends the notification, the permit shall be revoked and considered null and void. Notice shall be deemed served on the date that the notice is deposited in the United States Mail by Certified Mail and First-Class Mail to the permittee's address of record. Failure to accept or claim a mailed notice does not delay the 20-day period granted to address the violation.

Any use permit shall be considered null and void if construction does not conform to the originally approved site plan. Substantial deviations requested from the originally approved site plan shall be processed as a new use permit. In the case of Conditional Use Permits, substantial deviations are any deviation from the originally approved permit that materially alters the intensity, location, design, operation, or impact of the approved use, as determined by the Zoning Administrator

[Ord. No. 470]

H. FEE

The application for a conditional use permit shall be accompanied by a filing fee in an amount established by a schedule adopted by resolution of the Council and filed in the office of the Town Clerk. No part of the filing fee shall be returnable. Payment of the filing fee shall be waived when the petitioner is the Town, County, State or Federal Government.

I. TIMEFRAME

See Section 301.G

[Ord. No. 406; Ord. No. 407; Ord. No. 470]

SECTION 303.1. SITE PLAN REVIEW

A. PURPOSE

The purpose of the site plan review is to provide for the public health, safety and general welfare, and to protect the environment and the historical character of the Town of Jerome. The plan review will include examination of all proposed site work and excavation and grading regulations, with special regulation of work on sites with extreme slope or unstable soils. Essential to this purpose is the review of possible impacts on surrounding properties.

[Ord. No. 293; Ord. No. 470]

B. PROJECTS REQUIRING REVIEW BY THE PLANNING AND ZONING COMMISSION AND COUNCIL

1. Additions and alterations to residential, commercial, or industrial structures.
2. Decks.
3. Grading, excavation, clearing, and grubbing in accordance with Section 303.3.
4. Lot splits and lot line adjustments.
5. Modifications to nonconforming structures.
6. New residential, commercial, or industrial structures.
7. Sheds and accessory structures.
8. Projects not specifically listed as exempt (Section 303.1.D) or requiring Zoning Administrator review per Section 303.1.C.

[Ord. No. 470]

C. PROJECTS REQUIRING REVIEW BY THE ZONING ADMINISTRATOR

1. Parking areas.
2. Patios.
3. Replacement of exterior stairs with metal or other fire-resistant materials, provided there is less than a 10 percent change in the original footprint. Approval by the Fire Inspector is also required.

[Ord. No. 470]

D. PROJECTS EXEMPT FROM SITE PLAN REVIEW

1. Repair, replacement, and maintenance of existing structures, provided that the same materials are used.

[Ord. No. 470]

E. PROCEDURE

1. Site plan review may be accomplished by either the Zoning Administrator or the Planning and Zoning Commission and Council, depending on the project as noted in Sections 303.1.B and 303.1.C.
2. Applications for site plan review shall be submitted to the Zoning Administrator for review by the Building Inspector, Fire Inspector, Zoning Administrator, and other applicable reviewing bodies. Once submitted, the Zoning Administrator shall have fourteen (14) calendar days from the date of submission of a site plan application to review said plan for completeness. If the application is incomplete, the Zoning Administrator shall provide the applicant with a comprehensive list of specific deficiencies in a written notice.
3. If the application is determined to be complete, the Zoning Administrator shall determine whether a public hearing is required for the application. If required, the Zoning Administrator

shall forward the application to the Planning & Zoning Commission after conducting a substantive review of the complete application materials, and the application shall be processed in accordance with Section 302 of this Ordinance. If the site plan can be reviewed and approved by the Zoning Administrator, then site posting and a neighborhood meeting are not required, but the Zoning Administrator may request design review recommendations on the site plan from the Historic Preservation/Design Review Board.

4. The Zoning Administrator or the Council shall approve, conditionally approve, or deny a site plan application. Once denied, the original plan shall not be resubmitted.
5. The Historic Preservation/Design Review Board approval of the design elements of the site plan is outlined in Section 304.

F. SITE PLAN CONTENT REQUIREMENTS

Site Plan Applications shall include the following:

1. Site Plan Application Form
2. Written narrative of the proposed project (include uses, hours of operation, number of employees, etc.)
3. Plot plan or site layout; a directional north arrow; scale used; lot dimensions referenced to a legal description; and street dedications, easements and utilities, both public and private. When the location of a property perimeter is unclear, the Building Inspector may require a boundary survey with ground-staked corners.
4. A vicinity sketch showing the location of the site in relation to the surrounding street system. Adjacent properties and their uses shall be identified.
5. Location, perimeter size, and use of all existing and proposed buildings and structures, as well as the number of stories of all proposed buildings and structures.
6. Size and dimensions of required yards and lot coverage for the zoning district and the space between buildings.
7. Location and height of all existing and proposed walls and fences.
8. Location, number of spaces, dimensions, circulation patterns, and surface materials for all off-street parking and loading areas proposed. All parking shall comply with Section 510 of the Jerome Zoning Ordinance.
9. Existing drainage. Show how proposed drainage will be directed, indicating both adequate disposal and protection of neighboring properties.
10. Natural features, such as rock outcroppings, trees over twelve (12) inches in diameter, washes, and man-made features such as existing roads and structures, walkways, and stairways, with indication as to which are to be retained, removed, or altered.
11. Existing and proposed grades, by spot grades or topographic representation. The Building Inspector may require a topographic survey and additional engineering.
    a. Slopes exceeding thirty-five (35) percent shall require a topographic survey by a licensed engineer or surveyor. In addition, the applicant shall provide a satisfactory assessment by a licensed engineer regarding soil/geological stability, bearing qualities and drainage. If indicated by this assessment, a structural engineer shall design all foundations and retaining structures.
    b. Exceptions. The additional studies required in number 9(a) may be waived, if the dollar amount of the project does not require a licensed contractor according to A.R.S. 32-1121.
12. All proposed excavation and grading shall conform to Section 303.3 of this ordinance.

13. Any other information that the Zoning Administrator may find necessary to establish compliance with this and any other ordinances.
14. Application for sign permits shall be filed in accordance with the provisions of Section 509.

[Ord. No. 293; Ord. No. 470]

G. FEE

The application for Plan Approval shall be accompanied by a filing fee in an amount established by a schedule adopted by resolution of the Council and filed in the offices of the Town Clerk. No part of the filing fee shall be returnable. Payment of the filing fee shall be waived when the petitioner is the Town, County, State, or Federal government.

H. TIMEFRAME

See Section 301.G

[Ord. No. 293]

SECTION 303.2. FINAL SITE PLAN REVIEW

A. FINAL SITE PLAN PROCEDURES

If desired by the applicant or requested by the Planning and Zoning Commission or Town Council, projects may also be submitted for Final Site Plan Review. An application for a Final Site Plan shall be in accordance with Section 303.1 and shall include the following information:

1. Any additional features required as a result of engineering and/or soil studies;
2. Compliance with all applicable standards of this Zoning Ordinance.
3. Compliance with all applicable codes, including the Uniform Building Code.
4. Compliance with any conditions recommended by the Planning and Zoning Commission, Historic Preservation and Design Review Board, Building Inspector, Fire Inspector, and/or the Zoning Administrator from the previous review.

[Ord. No. 470]

B. REVIEW

1. Review for a Final Site Plan is in accordance with Section 303.1.

C. POST-APPROVAL PROCEDURE

1. All copies of the approved plan, with any conditions from the approving board, shall be dated and signed by the Zoning Administrator. One (1) copy of said approved plan and conditions, together with a notification of all design review requirements and procedures, shall be distributed to the applicant, and one (1) copy shall be filed with the Building Inspector.

[Ord. No. 293; Ord. No. 470]

D. TIMEFRAME

See Section 301.G

SECTION 303.3. GRADING AND EXCAVATION REQUIREMENTS

All excavation and grading shall be performed in accordance with these provisions.

This section shall not affect existing legal uses of property or the right to continuation of such legal use. However, if a nonconforming use of a structure or land is discontinued for six (6) months, any further use shall comply with these requirements.

Where the combined proposed cut and fill exceeds ten (10) cubic yards, the applicant must obtain a separate grading permit from the Building Inspector. An assessment by a civil, structural, or soil engineer may be required to demonstrate site stability and the absence of negative impact.

Six (6) months from the date of approval of a grading permit, the approval becomes void if the grading permit has not been issued.

Exploratory excavation of ten (10) cubic yards or less can proceed with the approval of the Zoning Administrator and Building Inspector. The applicant shall submit plans for approval by the Building Inspector and Zoning Administrator for all excavation in excess of ten (10) cubic yards. The Zoning Administrator may determine that excavation in excess of ten (10) cubic yards requires review and approval by the Planning & Zoning Commission.

[Ord. No. 470]

A. APPROVAL PROCEDURE

1. Any person wishing to do any grading, filling, excavation, cutting, or other site earthwork shall submit plans, drawings, and supporting data, including the quantity of cut and the quantity of fill, and any other information required by the Zoning Administrator and/or Building Inspector.
2. Grading shall be done in conjunction with a site plan filed with the Zoning Administrator. Grading, excavation, and fill shall not:
    a. adversely affect the lateral support of adjacent property or structures;
    b. increase the stresses in or pressures upon any adjacent or contiguous property;
    c. physically infringe on adjacent property;
    d. include detrimental excavation or stockpiling;
    e. be in a public right-of-way; or
    f. have a negative impact on existing drainage.
3. The effect of the proposal on scenic views will be considered for potential impact.
4. Where the slope exceeds thirty-five (35) percent, engineering reports shall be required under the Site Plan requirements of the Jerome Zoning Ordinance.

[Ord. No. 470]

B. POST-APPROVAL PROCEDURE

If approved by the Building Inspector and Zoning Administrator, the activity will be carried out as stipulated in these requirements. The activities described below shall be performed by licensed contractors where required by law.

1. All grading and excavation shall be performed with safety precautions and any anti-erosion or drainage devices required by the Building Inspector.
2. Construction equipment parking and storage needs shall be identified, and provisions made not to interrupt normal traffic flow more than absolutely necessary.
3. Dust control measures shall be taken and loads covered to prevent spilling and blowing.
4. Fencing of hazardous sites shall be required.

5. Safety fencing to protect neighboring property may be required.
6. The Building Inspector may require adequate inspection and compaction control by an approved soil testing agency. This may include certification concerning the inspection of cleared areas and benches to receive fill and the compaction of fills.
7. Cuts shall be accomplished to blend scale, form, and visual character into the natural landforms and minimize exposed scars.
8. Cuts shall be adequately fenced.
9. Driveway slope shall not exceed fifteen (15) percent, where possible, within topographic constraints. In every case, driveways shall blend with the surrounding natural colors and shall include adequate measures for runoff and drainage.
10. Fills shall be accomplished to blend scale, form, and visual character into the natural landforms and minimize exposed scars.
11. The Building Inspector may require further supporting data to ensure stability.

[Ord. No. 470]

C. RESPONSIBILITIES OF THE APPLICANT

1. The applicant, their agent, contractor, or employee shall carry out the proposed work in accordance with the approved plans and specifications and in compliance with all Jerome Zoning Ordinance requirements.
2. During grading operations, the applicant shall be responsible for the prevention of damage to any street or drainage facilities or to any public utilities or services.
3. The applicant is responsible for the prevention of damage to adjacent property, and no person shall excavate on land sufficiently close to the property line to endanger any adjoining public street, sidewalk, alley, or other public or private property prior to supporting and protecting such property from settling, cracking, or other damage that might result.
4. No modification of the approved grading, excavating, or fill plans may be made without the approval of the Building Inspector and Zoning Administrator.
5. Neither the issuance of a permit or approval under these requirements, nor the compliance with any provision of or conditions imposed in the issued permit, shall relieve any person from responsibility for damage to other persons or property, nor impose any liability upon the Town of Jerome for damage to other persons or property.
6. An as-built plan including original ground surface elevations, as-built surface elevations, site drainage patterns, and location and elevations of all surface and sub-surface drainage facilities shall be submitted upon completion of work. If required by the Building Inspector, a civil engineer's certification shall be provided for the final plan.

SECTION 303.4. APPEALS AND EXPIRATION OF APPROVALS

A. APPEALS

1. Any applicant, person residing within 300 feet of a project subject to the procedures in this Ordinance, or person adversely affected may appeal a decision of the Planning and Zoning Commission to the Town Council by filing a written notice of appeal with the Town Clerk not later than fifteen (15) days from the date of the commission's decision. If the appellant is not the applicant and resides beyond 300 feet of the project, the appellant shall clearly demonstrate how they might be adversely affected by the proposed project. Appeals of decisions by the Zoning Administrator are per Section 305 of this Ordinance.
2. When a written appeal is filed with the Town Clerk, the Town Clerk shall promptly provide notice of such an application to the Zoning Administrator. The appeal shall state the grounds for appeal and demonstrate how the appellant has been aggrieved or affected by the decision. The Zoning Administrator shall review the appeal to validate its completeness within three (3) days of receipt. If the appeal is deemed defective, the Zoning Administrator shall notify the applicant of the type and nature of the defect or defects within one (1) day of making said determination. If an appeal is determined to be complete, the Zoning Administrator shall schedule the appeal for Council consideration no later than 45 days from the determination of an application's completeness. Once scheduled, a legal notice shall be published at least once in a newspaper of general circulation within the Town of Jerome; the site shall be posted at least fifteen (15) days prior to the hearing date; and notice by First-Class mail shall be given to property owners within 300 feet of the site. Notice shall also be given to the Planning and Zoning Commission and the appellant. The Zoning Administrator shall submit a report to the Council with all relevant information and set forth the reasons for action taken by the Planning and Zoning Commission.
3. An appeal may be filed by persons aggrieved or by any officer, department, board, or bureau of the municipality affected by a decision of the Zoning Administrator. Appeals will be forwarded to the Board of Adjustment by filing a written notice of appeal with the Zoning Administrator not later than fifteen (15) days from the date of the Zoning Administrator's decision.

[Ord. No. 470]

B. BUILDING PERMIT ISSUANCE; EXPIRATION OF APPROVAL

1. Six (6) months from the date of approval, a plan approval becomes void if a building permit has not been issued and/or work has not commenced.
2. A building permit shall not be issued by the Building Inspector until the fifteen (15) day appeal period has expired.
3. An extension of approval may be granted if the applicant files for an extension prior to the approval becoming void and the extension is granted by the approving board. The approving board may grant a second extension, provided the approval complies with all ordinances and requirements in effect at the time of the extension request. Any additional extension requests require review by the Town Council. Application for an extension shall be accompanied by a filing fee in an amount established by a schedule adopted by resolution of the Council and filed in the office of the Town Clerk.

[Ord. No. 470]

C. VIOLATION AND ENFORCEMENT

1. Prior to the issuance of a building permit, the Building Inspector shall ascertain that the plans presented with the Building Permit application are in conformance with those plans approved by the Town Council or Zoning Administrator and that the time limitations imposed by this ordinance have not elapsed.

2. The Zoning Administrator shall ensure that all matters are undertaken according to the conditions of the approved plan. If, during the course of work, changes in the approved plan are necessitated by conditions found at the site, an appropriately licensed engineer's approval may be required for the modified plans. In the event of a violation, the Zoning Administrator shall notify the permittee, by mail, that he is in violation of the conditions of the approved plan. If there are no plans, approved by the Zoning Administrator, to eliminate the violation within fifteen (15) days after notification, the building permit shall be revoked and considered null and void.
3. If, thirty (30) days after written notification by the Zoning Administrator, the applicant is still in violation of this ordinance, the Zoning Administrator shall take appropriate legal action to abate the violation.

[Ord. No. 293; Ord. No. 470]

SECTION 304. HISTORIC PRESERVATION/DESIGN REVIEW BOARD

A. PURPOSE

The purpose of this section is to enable the Historic Preservation/Design Review Board to review the exterior design of proposed new buildings and structures, proposed alterations of buildings and structures, proposed signs, and proposed demolition of structures in order to ensure that new development is compatible with the surrounding environment, and to preserve and protect the historical character of the Town of Jerome. Design review provided by the Historic Preservation/Design Review Board is intended to promote and preserve Jerome's economic and environmental well-being, which depends exclusively upon its distinctive character, natural attractiveness, and overall architectural quality, which contribute substantially to its viability as a recreational and tourist center and which contributed to its designation as a National Historic Landmark. Design review is intended to enrich the lives of all the citizens of Jerome by promoting harmonious, attractive, and compatible development, and is therefore considered to be in furtherance of the general welfare.

[Ord. No. 470]

B. APPLICATION

The provisions of this Section shall apply to all new construction, exterior alterations, demolitions, and signs.

C. PROJECTS REQUIRING REVIEW BY THE HISTORIC PRESERVATION/DESIGN REVIEW BOARD

1. Awnings and permanent signs
2. Additions and exterior modifications
3. Decks
4. Demolitions of existing structures
5. Fences and walls
6. New structures
7. Paint, stain, and similar coatings
8. Sheds and accessory structures
9. Projects not specifically listed as exempt or requiring Zoning Administrator review

[Ord. No. 470]

D. PROJECTS REQUIRING REVIEW BY THE ZONING ADMINISTRATOR

1. Changes in roof material or color, provided the new roof has limited reflectivity.
2. Parking areas.
3. Patios.
4. Replacement of exterior stairs with metal or other fire-resistant materials, provided there is less than a 10 percent change in the original footprint and the change is approved by the Fire Inspector.
5. Window and door replacement, provided the new window or door replicates the same size and style of the window or door being removed.

[Ord. No. 470]

E. PROJECTS EXEMPT FROM DESIGN REVIEW BY THE HISTORIC PRESERVATION/DESIGN REVIEW BOARD

Landscaping (not including accessory structures such as gazebos, pergolas, shade structures, and sheds), provided any grading and excavation is in compliance with Section 303.3.

Repair, replacement, and maintenance of existing structures, provided that the same materials are used.

Nothing in this section shall be construed to prevent the ordinary maintenance or repair of any exterior elements of any building or structure; nor shall anything in this article be construed to prevent the construction, reconstruction, alteration, or demolition of any such elements that the authorized municipal officers, i.e., Building Inspector, Town Engineer, etc., shall certify as required by public safety.

[Ord. No. 470]

F. REVIEW PROCEDURE

1. Applications for design review shall be submitted to the Zoning Administrator for review by the Building Inspector, Fire Inspector, Zoning Administrator, and Historic Preservation/Design Review Board in accordance with the provisions of this section. Review may be accomplished by either the Zoning Administrator or the Historic Preservation/Design Review Board, as stated in Section 304.C and 304.D. The Zoning Administrator shall have fourteen (14) days from the date of submission of a design review application to review said application for completeness. If the application is incomplete, the Zoning Administrator shall provide the applicant with a comprehensive list of the specific deficiencies in a written notice. If the application is determined to be complete, the Zoning Administrator shall forward the application to the Historic Preservation/Design Review Board after conducting a substantive review of the complete application materials.
2. Upon receipt of any complete application for design review, and prior to holding a public hearing, a Neighborhood Meeting may be required in accordance with Section 306 of the Zoning Ordinance of the Town of Jerome.
3. After a Neighborhood Meeting has been held, if applicable, in accordance with Section 306, the Zoning Administrator shall then choose a reasonable time for the hearing of the application, and shall give notice to interested parties and to the public by publication of a notice in a newspaper of general circulation in the Town of Jerome, and by posting one notice of the hearing on the subject property requesting the proposed change, not less than fifteen (15) days prior to the hearing. The notice shall set forth the time and place of the hearing, including a general explanation of the matter to be considered, and a general description of the area affected.
4. If a review is required by the Historic Preservation/Design Review Board, the application shall be submitted for review by the board at the next available meeting. If Site Plan Review is required according to Section 303, the application shall be submitted concurrently. The applicant shall receive approval from the Historic Preservation/Design Review Board prior to being scheduled for Site Plan Review by the Planning and Zoning Commission. The Historic Preservation/Design Review Board or Zoning Administrator shall approve, conditionally approve, or deny the application. Once denied, the original plan shall not be resubmitted.
5. When, in the opinion of the Historic Preservation/Design Review Board, upon hearing and considering all relevant information, a project is not in keeping with either the tenets of this ordinance or the Jerome General Plan, the project shall be denied by specific motion of the Historic Preservation/Design Review Board.
6. When approved, all copies of the approved plan, including any conditions imposed by the reviewing body, shall be dated and signed by the Zoning Administrator. One (1) copy of said approved plan and conditions, together with a notification of all Design Review requirements and procedures, shall be distributed to the applicant, and one (1) copy shall be filed with the Building Inspector.
7. The Historic Preservation/Design Review Board shall utilize the current edition and applicable standards of the Secretary of the Interior's Standards for the Treatment of Historic Properties to evaluate applications for historic properties and structures.

[Ord. No. 470]

G. APPLICATIONS FOR APPROVAL AND PERMIT

1. A prescribed application form for Design Review approval shall be filed with the Zoning Administrator, which details the information that must be provided by the applicant, along with the plans and other documents that must be submitted.
2. An application for the demolition or removal of an existing building or structure shall be filed with the Zoning Administrator on a form prescribed by the Administrator, which details the information that must be provided by the applicant, along with the plans and other documents that must be submitted.

[Ord. No. 470]

H. FEE

The application for Design Review shall be accompanied by a filing fee in an amount established by a schedule adopted by resolution of the Council and filed in the offices of the Town Clerk. No part of the filing fee shall be returnable. Payment of the filing fee shall be waived when the petitioner is the Town, County, State, or Federal Government.

[Ord. No. 470]

I. REVIEW CRITERIA FOR NEW CONSTRUCTION

1. The Historic Preservation/Design Review Board and Zoning Administrator shall use the criteria below to review proposed applications for new construction. The Zoning Administrator, Historic Preservation/Design Review Board, and the applicant shall use photographs, lithographs, and other depictions of the Town of Jerome to support their findings. If photographs, etc., are unavailable, then the determination or finding shall be based on the works of a recognized historic preservation authority, such as, but not limited to, textbooks or an architect/historian. Each of the following criteria must be satisfied before an application can be approved.
    a. PROPORTION – The relationship of the width of a building or structure to its height shall be visually compatible with buildings, structures, and places to which it is visually related
    b. OPENINGS – The relationship of the width of the windows and doors to the height of windows and doors in a building shall be visually compatible with buildings, structures, and places to which the building is visually related.
    c. PATTERN – The relationship of solids to voids in the facade of a building or structure shall be visually compatible with buildings, structures, and places to which it is visually related.
    d. SPACING – The relationship of buildings or structures to the open space between them and adjoining buildings shall be visually compatible with the buildings, structures, and places to which it is visually related.
    e. ENTRANCES, PORCHES, DECKS, AND PROJECTIONS – The height, projection, supports, and relationship to streets and sidewalks of entrances, porches, decks, awnings, canopies, and balconies of a building shall be visually compatible with the buildings, structures, and places to which it is visually related
    f. MATERIALS, TEXTURE, AND COLOR – The materials, texture, and color of the facade of a building or structure shall be visually compatible with the predominant materials, textures, and colors used in the building and structures to which it is visually related.
    g. ROOFS – The roof shape of a building shall be visually compatible with the buildings to which it is visually related.
    h. ARCHITECTURAL DETAILS – Doors, windows, eaves, cornices, and other architectural details of a building or structure shall be visually compatible with buildings and structures to which it is visually related.

i. ACCESSORY BUILDINGS - Garages, carports, and sheds shall be visually compatible with buildings, structures, and places to which they are visually related.

j. ACCESSORY FEATURES – Fences, walkways, decks, stairways, lighting, antennae, and other manmade structures shall be visually compatible with buildings, structures, and places to which they are visually related.

k. LANDSCAPING – Landscaping shall be visually compatible with the landscaping around the buildings, structures, and places to which it is visually related.

l. SCREENING – The proposed addition, alteration, or other changes shall be screened with appropriate materials and in an appropriate design so as to be visually compatible with related properties, when, in the opinion of the Historic Preservation/Design Review Board, all other means of assuring visual compatibility are not reasonably possible.

m. SOLAR INSTALLATIONS – Refer to "Solar Energy System Design Guidelines" approved by the Town Council in June 2015, utilizing best practices for installing solar on historical buildings as recommended by the Department of the Interior. These guidelines are available at Jerome Town Hall, the Jerome Library, and on the Town of Jerome website.

2. The Historic Preservation/Design Review Board and Zoning Administrator shall review a submitted application for *Design Approval of Alterations, Additions, or Renovations to Existing Buildings or Structures*, and shall have the power to approve, conditionally approve, or disapprove all such requests, basing their decision on the following criteria:

   a. ARCHITECTURAL FEATURES AND DETAILS – Original porches, decks, balconies, canopies, doors, windows, walls, fences, stairways, eaves, cornices, and other architectural features and details shall be preserved and retained where feasible. Necessary replacement of these features should be as near as possible to the original feature in design and material.

   b. ROOFS – Original roof shape, design, and material shall be preserved and retained where feasible. Where contemporary roofing material is used, it should be as near as possible to the appearance of the original roofing material.

   c. COLOR – Exterior colors should be as near as possible to the original colors appropriate to the years during which the particular building or structure was built.

   d. MATERIALS AND TEXTURE – The original exterior materials and texture shall be preserved and retained where feasible. Where contemporary materials are used, they should be as near as possible to the original material and texture.

3. The Historic Preservation/Design Review Board shall review a submitted application for *Approval of the Demolition, Partial Demolition, or Removal of Existing Buildings or Structures*, and shall have the power to approve, conditionally approve, or disapprove, all such requests; in accordance with the following procedures and criteria.

   a. In passing on an application for demolition, partial demolition, or removal, the Historic Preservation/Design Review Board shall consider, among other things, the architectural or aesthetic quality or significance of the building or structure to the public interests of the Town.

   b. If the Historic Preservation/Design Review Board finds that the public interest and the preservation and protection of historic places will best be served by postponing the demolition, partial demolition, or removal of a building or structure, it may postpone such action for a designated period, which shall not exceed one hundred eighty (180) days from the receipt of the application, and shall notify the applicant of such postponement. During the period of postponement of such demolition or alteration of any building, the Historic Preservation/Design Review Board shall take steps to ascertain what the Town Council can or may do to preserve such building, including consultation with private civic groups,

interested private citizens, and other public boards or agencies, and consideration of the use of eminent domain when the preservation of a given building is clearly in the interest of the general welfare of the community and of certain historic and architectural significance. The Historic Preservation/Design Review Board shall thereafter make such recommendations to the Town Council.

4. The Historic Preservation and Design Review Board shall review a submitted application for Design Approval of Signs and shall have the power to approve, conditionally approve, or disapprove all such requests, basing its decision on the following criteria:

   a. MATERIALS – Signs made of durable, weather-resistant materials such as acrylic, resin, steel, aluminum, or composite materials are preferred.

   b. LETTERING – Lettering and symbols on signs should be routed, applied, or painted on the surface of the sign material.

   c. COLORS – Colors of a sign shall be visually compatible with the colors of buildings, structures, and signs to which the sign is visually related.

   d. EXCEPTIONS – The Historic Preservation/Design Review Board may waive the requirements of this Section and Section 507 in order to allow the preservation or restoration of signs or commercial graphics which are determined to be of historical significance or of particular interest.

[Ord. No. 374; Ord. No. 406; Ord. No. 451; Ord. No. 470; Ord. No. 472]

J. APPEALS AND EXPIRATION OF APPROVALS

1. Any applicant, person residing within 300 feet of the project, or person adversely affected, may appeal a decision of the Historic Preservation/Design Review Board to the Town Council by filing a written notice of appeal with the Town Clerk no later than fifteen (15) days from the date ofthe board's decision. If the appellant is not the applicant and resides beyond 300 feet of the project, the appellant shall clearly demonstrate how they might be adversely affected by the proposed project.

2. When a written appeal is filed with the Town Clerk, the Town Clerk shall promptly provide notice of such an application to the Zoning Administrator. The appeal shall state the grounds for appeal and demonstrate how the appellant has been aggrieved or affected by the decision. The Zoning Administrator shall review the appeal to validate its completeness within three (3) days of receipt. If the appeal is deemed defective, the Zoning Administrator shall notify the applicant of the type and nature of the defect or defects within one (1) day of making said determination. If an appeal is determined to be complete, the Zoning Administrator shall schedule the appeal for Council consideration no later than 45 days from the determination of an application's completeness. Once scheduled, a legal notice shall be published at least once in a newspaper of general circulation in the Town of Jerome, the site shall be posted at least fifteen (15) days prior to the hearing date, and notice shall be mailed to property owners within 300 feet of the site. Notice shall also be given to the Historic Preservation/Design Review Board and the appellant. The Zoning Administrator shall submit a report to the Council with all relevant information and set forth the reasons for action taken by the Historic Preservation/Design Review Board.

3. An appeal may be filed by persons aggrieved or by any officer, department, board, or bureau of the municipality affected by a decision of the Zoning Administrator. Appeals will be forwarded to the Board of Adjustment by filing a written notice of appeal with the Zoning Administrator, no later than fifteen (15) days from the date of the Zoning Administrator's decision.

4. Six (6) months from the date of approval, a plan approval becomes void if a building permit has not been issued and/or work has not commenced.

5. A building permit may not be issued by the Building Inspector until the fifteen (15)-day appeal period has expired.

6. An extension of approval may be granted if the applicant files for an extension prior to the approval becoming void and the extension is granted by the approving board. The approving board may grant a second extension, provided the approval complies with all ordinances and requirements in effect at the time of the extension request. Any additional extension requests require review by the Town Council. Application for an extension shall be accompanied by a filing fee in an amount established by a schedule adopted by resolution of the Council and filed in the office of the Town Clerk.

[Ord. No. 470]

K. VIOLATIONS AND ENFORCEMENT

1. Prior to the issuance of a building permit, the Building Inspector shall ascertain that the plans presented with the Building Permit application are in conformance with those plans approved by the Mayor and Council, Historic Preservation/Design Review Board, or the Zoning Administrator and that the time limitations imposed by this ordinance have not elapsed.

2. The Zoning Administrator shall ensure that all matters are undertaken according to the conditions of the design approval. In the event of a violation, the Zoning Administrator shall notify the permittee, by both Certified and First-Class mail, that he is in violation of the conditions of the design approval. If no attempt is made to change the circumstances of the violation within fifteen (15) days after notification, the building permit shall be revoked and considered null and void.

3. Violations, Enforcements, and Fines. If, fifteen (15) days after written notification by the Zoning Administrator, a citizen is still in violation of this ordinance, the Zoning Administrator shall take appropriate legal action to abate the violation.

[Ord. No. 470]

SECTION 305. ADMINISTRATIVE APPEALS AND VARIANCES

A. APPEALS TO THE BOARD OF ADJUSTMENT

1. Appeals to the Board of Adjustment concerning the interpretation or administration of this Ordinance may be taken by any person aggrieved or by any officer or department of the Town affected by any decision of the Zoning Administrator.
2. Applications for any matter to be considered by the Board shall be filed with the Zoning Administrator, on forms furnished for the purpose, within thirty (30) days of the action being appealed, and shall specify the grounds for the appeal. The Zoning Administrator shall promptly transmit to the Board all papers constituting the record of the action appealed.
3. The appeal stays all proceedings in the matter appealed from, unless the Zoning Administrator certifies to the board that, by reason of the facts stated in the certificate, a stay would, in their opinion, cause imminent peril to life or property. In such case, proceedings shall not be stayed, except by a restraining order granted by the Board, or by a court of record on application and notice to the Zoning Administrator.
4. The Board shall hear the appeal within thirty (30) days and shall give notice of hearing by publication of a notice in a newspaper of general circulation in the Town of Jerome and by posting the property affected not less than fifteen (15) days prior to the hearing. The notice shall set forth the time and place of the hearing and include a general explanation of the matter to be considered.
5. Any party may appear at the hearing in person or by agent or attorney. Parties in interest shall have the right to present their case by oral or documentary evidence, to submit rebuttal evidence, and to conduct such cross-examination of witnesses as may be required for a full and true disclosure of the facts.

B. VARIANCES

1. Any aggrieved person may appeal to the Board of Adjustment for a variance from the terms of the Zoning Ordinance only, if because of special circumstances applicable to the property, including its size, shape, topography, location, or surroundings the strict application of the zoning ordinance will deprive such property of privileges enjoyed by other property of same classification in the same zoning district. Any variance granted is subject to such conditions as will assure that the adjustment authorized shall not constitute a grant of special privileges inconsistent with the limitations upon other properties in the vicinity and zone in which such property is located.
2. A variance shall not be granted by the Board unless the alleged hardship caused by literal interpretation of the provisions of this Ordinance results in more than personal inconvenience and/or financial hardship and is not the result of actions by the appellant.
3. In granting a variance, the Board may impose such conditions and safeguards as are appropriate to ensure that the purpose and intent of this Ordinance will be fulfilled. Failure to comply with such conditions and safeguards, when made a part of the terms under which a variance is granted, shall be deemed a violation of this Ordinance.
4. No nonconforming use or violations of this Ordinance with respect to neighboring lands, structures, or buildings, in the same zoning district, and no permitted use of lands, structures, or buildings in other zoning districts, shall be considered grounds for granting a variance.
5. Every variance granted shall be personal to the appellant and shall be transferable and shall run with the land only after completion of any authorized structure or structures.
6. Nothing herein contained shall be construed to empower the Board to change the terms of this Ordinance, to authorize uses which violate any other Town Ordinance, to effect changes in the Zoning Map, or to add to the uses permitted in any zoning district.

C. APPEALS FROM THE BOARD

The decision of the Board shall be final; provided, however, that any person aggrieved by a decision of the Board, or a taxpayer, or a municipal officer may, at any time within thirty (30) days after a decision of the Board, petition the court for a writ of certiorari for review of the Board's decision. Allowance of the writ shall not stay proceedings upon the decision appealed from, but the court may, on application, on notice to the Board, and for good cause shown, grant a restraining order, and on final hearing may reverse or affirm, wholly or partly, or may modify the decision reviewed.

D. FEES

1. Upon filing an application for appeal, the appellant shall pay a filing fee in an amount established by a schedule adopted by resolution of the Council and filed in the offices of the Town Clerk. No part of the filing fee shall be returnable. Payment of the filing fee shall be waived when the petitioner is the Town, County, State, or Federal Government.
2. In the case of an appeal for a variance to more than one provision of this Ordinance, the filing fee shall equal the total amount chargeable for all provisions as prescribed by the fee schedule.

SECTION 306. NEIGHBORHOOD MEETINGS

A. PURPOSE

Neighborhood Meetings provide an opportunity for informal communication between an applicant, neighboring residents, and property owners who may be affected by development projects, use permits, rezoning, or ordinances that impose a new land use regulation or modify an existing land use regulation. The purposes of the Neighborhood Meeting are to inform the affected public about the project and encourage communication among the applicant and neighboring residents and property owners.

B. GENERAL REGULATIONS

1. Prior to any public hearing by the Planning and Zoning Commission on rezoning or ordinances that impose a new land use regulation or modify an existing land use regulation, the applicant or an appointed representative of the applicant shall arrange a meeting with the planning staff to identify development issues as well as to discuss arrangements and scheduling for the Neighborhood Meeting described in Subsection 4 below.
2. When required pursuant to Section 302.D.1 of the Jerome Zoning Ordinance, prior to any public hearing by the Planning and Zoning Commission on a use permit, the applicant or an appointed representative of the applicant shall arrange a meeting with the planning staff to identify development issues as well as to discuss arrangements and scheduling, if required, for the Neighborhood Meeting described in Subsection 4 below.
3. Prior to any public hearing by the Historic Preservation/Design Review Board on a development project, the applicant or an appointed representative of the applicant shall arrange a meeting with the planning staff to identify development issues as well as to discuss arrangements and scheduling, if required, for the Neighborhood Meeting described in Subsection 4 below.
4. A Neighborhood Meeting designed to inform adjoining residents and property owners about the proposed development project, use permit, ordinances that impose a new land use regulation or modify an existing land use regulation, or rezoning will, if required to be held, be arranged by the Zoning Administrator. The meeting should be held at a location generally accessible to neighbors who reside near the subject site.
5. At least 15 days prior to a scheduled Neighborhood Meeting, the Zoning Administrator shall notify all property owners within 300 feet of the subject site by first-class mail, and the actual property shall be posted with the meeting date and time. The mailed notification shall include the date, time, and place for the Neighborhood Meeting, as well as a description of the proposed land uses, project, or conditional use permit.
6. At the Neighborhood Meeting, it is the responsibility of the applicant or their representative to provide an opportunity for a question-and-answer period by the participants and identify a point of contact to the public for follow-up questions and comments.
7. The applicant shall prepare a written summary of the meeting, including a list of attendees, their addresses, and the issues and concerns discussed, and submit a copy of the summary to the Zoning Administrator within 15 days after the neighborhood meeting. The summary shall be made available, upon request, to any meeting attendee. Attendees may, at their discretion, also submit their comments to the Zoning Administrator.
8. If the application is substantially modified from what was presented at the initial Neighborhood Meeting, the Zoning Administrator may require that one or more additional Neighborhood Meetings be held in compliance with this section to present the modified application.
9. For rezonings of property initiated by the Town, the Town shall be deemed the applicant and shall conduct a Neighborhood Meeting as required by Subsections 2 through 5 of this section 306 B. For ordinances that impose a new land use regulation or modify an existing land use

regulation, the Town's obligations under this Section 306 shall be satisfied by complying with the notice and hearing requirements otherwise imposed by this Zoning Ordinance.

[Ord. No. 470 (reference to 304.F.5.deleted)]

C. FEE

A fee shall be assessed to the applicant in an amount established by Resolution of the Council and paid in the offices of the Town Clerk. No part of the fee shall be returnable. Payment of the fee shall be waived when the petitioner is the Town, County, State, or Federal Government.

[Ord. No. 406]

SECTION 307. PRE-APPLICATION MEETINGS

A. PURPOSE

The purpose of this section is to provide applicants with early guidance on zoning requirements, development standards, and review procedures before submitting a formal application. This process helps identify potential issues, improve project design, ensure compliance with applicable regulations, and streamline the overall development review process.

B. GENERAL REGULATIONS

1. Prior to the submittal of any application for subdivision plats, zone changes, conditional use permits, development packages for new construction, or any other application as determined by the Zoning Administrator, an applicant shall first participate in a pre-application review with Town staff.

C. PRE-APPLICATION PROCEDURES

An applicant shall file a request for pre-application review with the Zoning Administrator on an application established by the Zoning Administrator that may require additional information, such as a time as, and all applicable portions of Section 304 shall apply to proposed development outside the Historic Overlay District.

ARTICLE IV: ZONING DISTRICTS

SECTION 401. ESTABLISHMENT OF ZONING DISTRICTS

In order to carry out the purposes of this ordinance, the Town of Jerome is hereby divided into the following zoning districts:

"AR" Zone - Agricultural Residential.

"R1-10" Zone - Single Family Residential

"R1-5" Zone - Single Family Residential

"R-2" Zone - Multiple Family Residential

"C-1" Zone - General Commercial

"I-1" Zone - Light Industrial

Historic Overlay District

SECTION 402. LOCATION AND BOUNDARIES OF DISTRICTS

1. The locations and boundaries of the zoning districts are established as they are shown on the map entitled "Zoning Map of the Town of Jerome,[1]" which is hereby incorporated into this ordinance.
2. Where uncertainty exists with respect to the boundaries of any zoning districts as shown on the zoning map, the following rules shall apply:
    a. Where district boundaries are shown by specific dimensions, such specific dimensions shall apply.
    b. Where district boundaries are indicated as approximately following streets, alleys, or right-of-way lines, such streets, alleys, or right-of-way lines shall be deemed to be such boundaries.
    c. Where district boundaries are so indicated that they approximately follow the lot lines, such lot lines shall be deemed to be said boundaries.
    d. Where district boundaries are so indicated that they are approximately parallel to the streets, alleys, or right-of-way lines, such district boundaries shall be deemed as being parallel thereto and at such distance therefrom as indicated on the zoning map. If no distance is given, such dimensions shall be determined by the use of the scale shown on the zoning map.
    e. Where the application of the above rules does not clarify the zone boundary location, then the Board of Adjustment shall determine the location.
3. Unzoned territory annexed to the Town subsequent to the effective date of this Ordinance shall, upon the date that said annexation becomes effective, automatically become zoned as AR, agricultural-residential, and shall so remain until such time as the Town Council shall see fit to approve a change of zone request for the annexed area.

[1] Codifier's note: The current Zoning Map is that map dated February 14, 2022, as adopted by Ordinance 477.

SECTION 403. "AR" ZONE, AGRICULTURAL RESIDENTIAL

A. PURPOSE

This district is intended to promote and preserve low-density residential development and non-commercial farming and agriculture. Land use is composed chiefly of individual homes, while also accommodating compatible recreational, religious, and educational facilities.

B. PERMITTED AND CONDITIONAL USES

The permitted and conditional uses of the AR zone are listed in Table 410: Use Matrix of Section 410.

C. USE/ZONE-SPECIFIC STANDARDS

Standards for the zoning district and specific uses are provided in Table 411: Use/Zone-Specific Standards Matrix and Table 412: Development Standards Matrix

[Ord. No. 380; Ord. No. 474]

[Ord. No. 446]

SECTION 404. "R1-10" ZONE, SINGLE FAMILY RESIDENTIAL

A. PURPOSE

This district is intended to promote and preserve low density residential development. Regulations and property development standards are designed to protect the single-family residential character of the district and to prohibit all incompatible activities. Land use is composed chiefly of individual homes, while also accommodating compatible recreational, religious and educational facilities.

B. PERMITTED AND CONDITIONAL USES

The permitted and conditional uses of the R1-10 zone are listed in Table 410: Use Matrix of Section 410.

C. USE/ZONE-SPECIFIC STANDARDS

Standards for the zoning district and specific uses are provided in Table 411: Use/Zone-Specific Standards Matrix and Table 412: Development Standards Matrix

[Ord. No. 474]

[Ord. No. 446]

SECTION 405. "R1-5" ZONE, SINGLE FAMILY RESIDENTIAL

A. PURPOSE

This district is intended to fulfill the need for medium density single family residential development. Regulations and property development standards are designed to protect the single family residential character of the district and to prohibit all incompatible activities. Land use is composed chiefly of individual homes, while also accommodating compatible recreational, religious, and educational facilities.

B. PERMITTED AND CONDITIONAL USES

The permitted and conditional uses of the R1-5 zone are listed in Table 410: Use Matrix of Section 410.

[Ord. No. 474]

C. USE/ZONE-SPECIFIC STANDARDS

Standards for the zoning district and specific uses are provided in Table 411: Use/Zone-Specific Standards Matrix and Table 412: Development Standards Matrix.

[Ord. No. 446]

SECTION 406. "R-2" ZONE, SINGLE- AND TWO-FAMILY RESIDENTIAL

A. PURPOSE

This district is intended to fulfill the need for medium density residential development regulations and property development standards are designed to allow maximum flexibility and variety in residential development while prohibiting all incompatible activities. Land use is composed chiefly of single- and two-family homes, while also accommodating compatible recreational, religious, and educational facilities.

B. PERMITTED AND CONDITIONAL USES

The permitted and conditional uses of the R-2 zone are listed in Table 410: Use Matrix of Section 410.

C. USE/ZONE-SPECIFIC STANDARDS

Standards for the zoning district and specific uses are provided in Table 411: Use/Zone-Specific Standards Matrix and Table 412: Development Standards Matrix.

[Ord. No. 446; Ord. No. 454]

SECTION 407. "C–1" ZONE, GENERAL COMMERCIAL

A. PURPOSE

This district is intended to provide for and encourage orderly development in existing and future commercial areas within the Town.

B. PERMITTED AND CONDITIONAL USES

The permitted and conditional uses of the C-1 zone are listed in Table 410: Use Matrix of Section 410.

[Ord. No. 293; Ord. No. 408; Ord. No. 454; Ord. No. 465]

C. USE/ZONE-SPECIFIC STANDARDS

Standards for the zoning district and specific uses are provided in Table 411: Use/Zone-Specific Standards Matrix and Table 412: Development Standards Matrix.

[Ord. No. 293; Ord. No. 446]

SECTION 408. "I-1" ZONE, LIGHT INDUSTRIAL

A. PURPOSE

This district is intended to provide for commercial, industrial, and manufacturing activities, while ensuring that these activities will in no manner affect in a detrimental way any of the surrounding districts.

B. PERMITTED AND CONDITIONAL USES

The permitted and conditional uses of the I-1 zone are listed in Table 410: Use Matrix of Section 410.

C. USE/ZONE-SPECIFIC STANDARDS

Standards for the zoning district and specific uses are provided in Table 411: Use/Zone-Specific Standards Matrix and Table 412: Development Standards Matrix.

SECTION 409. HISTORIC OVERLAY DISTRICT

A. PURPOSE

The purpose of the Historic Overlay District is to preserve and protect the historical quality and distinctive architectural character of the Town of Jerome since Jerome's economic and environmental well-being depends exclusively upon its distinctive character, natural attractiveness, and overall architectural quality which contribute substantially to its viability as a recreation and tourist center and which contributed to its designation as a National Historic Landmark.

B. DISTRICT RESTRICTIONS

The exterior designs of proposed new buildings and structures, proposed alterations of buildings and structures, landscaping plans, proposed signs, and proposed demolition of buildings and structures within the Historic Overlay District shall be reviewed by the Historic Preservation and Design Review Board in accordance with the provisions of Section 304 of this Ordinance to ensure that all new development is compatible with the surrounding environment.

C. DISTRICT BOUNDARIES

The Historic Overlay District shall include all areas within the corporate limits of the Town of Jerome as of 10/13/2026. Future annexations of land without historic resources shall not be included within the district boundaries.

SECTION 410. USE MATRIX

Table 410: Use Matrix

P = Permitted Use
C = Conditional Use; some conditionally permitted uses are also subject to the standards of Table 411: Use/Zone-Specific Standards Matrix.
X = Prohibited Use
U = Permitted subject to the standards of Table 411: Use/Zone-Specific Standards Matrix

Uses	AR	R1-10	R1-5	R-2	C-1	I-1
One (1) Single-Family Dwelling	P	P	P	P	C	C
One (1) Duplex	X	P	P	P	C	C
One (1) Triplex	X	C	C	P	C	C
One (1) Quadplex	X	C	C	P	C	C
One (1) Modular Home per lot	P	P	P	P	C	C
Mobile Homes	X	X	X	X	X	X
Multi-family Dwelling	X	X	X	X	C	C
Accessory Uses, buildings, and structures incidental to a principally permitted use, except as otherwise provided in this Ordinance	P	P	P	P	P	P
Adaptive Residential Reuse, subject to the standards of the Table 411: Use/Zone-Specific Standards Matrix	C	C	C	C	C	C
Administrative and Professional Offices	X	X	X	X	P	P
Animals, fowl, and other typical farm livestock, except as otherwise prohibited herein.	C	X	X	X	X	X
Automobile Repair Services Establishment	X	X	X	X	X	C
Automobile Sales	X	X	X	X	C	C
Automobile Service Stations	X	X	X	X	C	C
Automobile Wrecking Yard	X	X	X	X	X	C
Banks, stock brokerage firms, savings and loan associations, loan companies, and credit unions	X	X	X	X	P	P
Bed and Breakfast	C	C	C	C	C	C
Beekeeping subject to the standards of Table 411: Use/Zone-Specific Standards Matrix	C	C	C	C	C	C
Business and trade schools, dancing, art, and music schools and studios	X	X	X	X	P	P
Cemeteries	C	X	X	X	X	C
Child Care Centers	C	C	C	C	C	C
Child Day Care Home	C	C	C	C	C	C
Churches or similar places of worship	C	C	C	C	C	C
Commercial stables	C	X	X	X	X	X
Educational						
Colleges, universities, and professional schools having a regular curriculum	C	C	C	C	C	C
Public, Private, Charter, or Parochial Elementary, Junior High, and High Schools	C	C	C	C	C	C
Establishments primarily supplemental in character to other permitted principal uses, such as: pharmacy, apothecary shop, sales of corrective garments, prosthetic devices, optical goods, and medical and dental laboratories	X	X	X	X	P	P
Governmental services, public utility offices and exchanges, excluding storage or repair services	X	X	X	X	P	P
Headquarters buildings of charitable, philanthropic, and welfare organizations, provided that their primary activities are administrative and clerical rather than residential in nature	X	X	X	X	P	P
Heavy Industry, as defined by this Ordinance, including, but not limited to, chemical manufacturing and processing plants, explosives manufacturing, pulp and paper mills, and similar manufacturing activities	X	X	X	X	X	C
Live/Work Dwelling subject to the standards of Table 411: Use/Zone-Specific Standards Matrix	P	P	P	P	C	C
Hospitals, nursing homes, and convalescent homes	X	X	X	X	C	C

Hotels	X	X	X	X	P	P
Indoor commercial recreation establishments, such as bowling alleys, billiard parlors, skating rinks and similar establishments	X	X	X	X	C	C
Indoor theaters, assembly halls, ballrooms and similar places of assembly	X	X	X	X	C	C
Keeping of cattle and horses owned by members of the family occupying the premises, but not to exceed one (1) head per 20,300 square feet of lot area. All other instances are considered conditional except as provided herein.	P	X	X	X	X	X
Libraries	X	C	C	C	C	C
Light Industry, as defined by this Ordinance, including, but not limited to, jewelry manufacturing, clothing and apparel manufacturing, furniture manufacturing and assembly, electronics assembly, packaging operations, and similar manufacturing activities that do not constitute Heavy Industry	X	X	X	X	X	C
Manufacturing incidental to a permitted use subject to the standards provided in Table 411: Use/Zone-Specific Standards Matrix	X	X	X	X	U	U
Medical and dental offices and clinics	X	X	X	X	P	P
Membership Organizations	C	X	X	X	P	P
Mobile Food Unit	X	X	X	X	P	P
Model Homes	C	C	C	C	C	C
Noncommercial farming and agriculture, not including the keeping of livestock	P	X	X	X	X	X
Outdoor commercial recreation establishments	X	X	X	X	C	C
Outdoor sales of nursery stock	X	X	X	X	C	C
Pawn shops	X	X	X	X	P	P
Personal services such as: barbers, beauty shops, health clubs, laundries and cleaners, mortuaries.	X	X	X	X	P	P
Pet shops	X	X	X	X	C	C
Printers and print shops	X	X	X	X	P	P
Privately owned and operated recreation areas and centers	C	X	X	X	P	P
Public buildings	C	C	C	C	C	C
Public utility buildings, structures, or appurtenances thereto for public service use	C	C	C	C	C	C
Publicly owned and operated parks and recreation areas and centers	P	P	P	P	C	C
Radio and TV studios provided that no masts, towers, or antenna used for transmission or broadcasting purposes are erected on the premises	C	X	X	X	P	P
Repair services such as, but no more objectionable or intensive in character than, watches, jewelry, shoes, locksmith, minor household appliances	X	X	X	X	P	P
Research and Development	X	X	X	X	U	U
Restaurant						
Consumption on premises outside of enclosed building	X	X	X	X	C	C
Excluding live entertainment[1]	X	X	X	X	P	P
Including live entertainment	X	X	X	X	C	C
Retail Sales Establishment	X	X	X	X	P	P
Spirituous liquor tasting facilities	X	X	X	X	C	C
Taxi stands, bus stops, parking lots and garages	X	X	X	X	C	C
Temporary buildings for uses incidental to construction work, which shall be removed upon completion of or abandonment of the construction work.	P	P	P	P	C	C
Temporary outdoor sales. Displays and other outdoor activities	X	X	X	X	C	C
Viniculture use, subject to the standards of Table 411: Use/Zone-Specific Standards Matrix	C	X	X	X	X	X
Warehouses	X	X	X	X	X	C
Wholesale establishments	X	X	X	X	X	C

Wireless Communication Facilities, subject to the standards of Table 411: Use/Zone-Specific Standards Matrix	C	C	C	C	C	C
Any other such uses as determined by the Zoning Administrator to be similar to those uses permitted in the zoning district and not detrimental to the public health, safety and general welfare in accordance with the provisions of this Ordinance	X	X	X	X	P	P
Any other such uses as determined by the Zoning Administrator to be similar to those uses conditionally permitted in the zoning district and not detrimental to the public health, safety and general welfare in accordance with the provisions of this Ordinance	X	X	X	X	C	C

SECTION 411. USE/ZONE-SPECIFIC STANDARDS MATRIX

Table 411: Use/Zone-Specific Standards Matrix

Use	Zone	Standard
Adaptive Residential Reuse	AR, R1-10, R1-5, R-2, C-1, I-1	1. Residential use of a building or portion of a building is permitted when in the opinion of the Zoning Administrator, said use has little or no adverse effect on the public health, safety and general welfare; or 2. Residential uses are permitted by right in a building with a documented historic residential use, whether that use is active or not
Beekeeping	AR, R1-10, R1-5, R-2, C-1, I-1	The following standards and requirements apply to the keeping of any hive, colony, or apiary bees within the town limits: 1. All persons shall be required to obtain a conditional use permit prior to the keeping of bees. The application form shall include the name, address and telephone number of the person seeking the permit as well as the name, address, and telephone number of the property owner. If the applicant is other than the property owner, then the application shall also include written permission of the owner for the use of the property for keeping a hive, colony, or apiary. The form shall also include a drawing of the property indicating the location for the keeping of the hive, colony or apiary and an acknowledgement that, prior to the placing of the hive, colony or apiary upon the property, an adequate supply of water and other nutrients are available on the property near the hive, colony or apiary. 2. Upon receipt of a beekeeping application, and at least 15 days prior to review by the Planning and Zoning Commission, public notification shall be mailed by the Town to properties within 100 feet of the subject property. 3. No more than two hives shall be allowed on a parcel. 4. Hives shall be located in the area behind the primary structure and in front of the rear lot line and set back from the side and rear property lines a minimum of five (5) feet. 5. A flyway barrier consisting of a solid wall, fence, dense vegetation, or combination of these materials at least six (6) feet high shall be provided and extend at least ten (10) feet beyond the hives on each end of an apiary. 6. Each beekeeper shall ensure that a constant and easily accessible supply of fresh water and other nutrients of sufficient quantity to meet the needs of all bees being maintained or kept is always available to the bees so that they are discouraged from congregating at pet water bowls, birdbaths, pools, spas or other water sources where they may cause human or domestic pet contact.

		7. Initial hives shall contain a queen selected from stock bred for gentleness, and bees who are relatively gentle and non-defensive. If a colony becomes too defensive, then the beekeeper shall be obligated to move that colony to a different location or to replace the queen with a gentler queen. 8. The first violation of this Section shall be treated as a petty offense. All subsequent violations within a succeeding two-year period shall be treated as Class I misdemeanors, subject to penalties as set forth in Article 1-8 of the Jerome Town Code. 9. The provisions of this Section shall not apply to any property owner upon whose property a swarm of transient bees is attempting to or has established a domicile. 10. Any honeybee colony not residing in a structure intended for beekeeping, or any colony residing in a standard or homemade hive that, by virtue of its condition, has obviously been abandoned by the beekeeper, or any hive, colony or apiary which does not contain the water and nutrient requirements of standard 6 of these requirements or any hive, colony or apiary for which no permit has been issued, is unlawful and shall be deemed a public nuisance. 11. The Town, upon a complaint, may take any actions necessary to remove the abandoned hive, colony, or apiary from the property. [Ord. 474, 8/10/21 *NOTE: Ord. 474 incorrectly established the "Beekeeping" paragraph as Paragraph O. This was corrected during codification to Paragraph P.]
Live/Work Dwelling	AR, R1-10, R1-5, R-2, C-1, I-1	1. Home occupations shall be clearly incidental and subordinate to the use of the property and dwelling unit for dwelling purposes, and shall not change the character thereof. 2. There shall be no employees other than members of the immediate family residing on the premises. 3. No business shall be conducted which requires delivery vehicles or other services not customary to a residence. 4. Signs shall be subject to applicable provisions of Section 509. 5. All materials and equipment used and maintained in connection with a home occupation must be used and stored inside the dwelling and accessory buildings. 6. No public display of items for sale shall be permitted. 7. A home occupation shall not create any nuisance or hazard, or other offensive condition such as that resulting from noise, smoke, fumes, dust, odors or other noxious emissions. Electrical or mechanical equipment

		that causes fluctuation in line voltage, creates any interference in either audio or video reception or causes any perceivable vibration on adjacent properties is not permitted. 8. The use shall not generate more pedestrian or vehicular traffic than is typical to the zone in which it is located. [Ord. No. 442]
All Permitted or Conditional Uses of the Zoning District	AR	1. Cattle, horses, sheep, goats, dogs, cats, birds, fowl, and any other living animals, and the pens, stalls, stables, yards, shelters, cages, areas, places, and premises where they are held or kept, shall be so maintained that flies, insects, or vermin, rodent harborage, odors, ponded water, the accumulation of manure, garbage, refuse or other noxious material do not become a public health nuisance and do not disturb the peace, comfort, or health of any person. 2. Any person, firm, or corporation is prohibited from keeping or sheltering any animal, bird, or fowl other than a household pet within one hundred (100) feet of a building, other than his own, used for human habitation. 3. Pigs shall not be kept within the city limits.
Viniculture	AR	1. The irrigated area in any parcel of viniculture shall not exceed one-half (1/2) acre. 2. Adjoining parcels including up to one-half (1/2) acre of irrigated area shall be considered separate parcels for the purposes of this Article. 3. A separate water meter shall be required for each parcel of viniculture, and each shall require an application for water service and payment of applicable water hookup fees, in accordance with the provisions of Chapter 13, “Water,” of the Jerome Town Code. 4. Water usage for each parcel used for viniculture shall be subject to Town water restrictions. 5. If water availability decreases for any reason, including but not limited to drought, climate conditions or system failure, restrictions may be placed on water use according to the Town’s Demand Reduction Strategies or any emergency measures in place or enacted at any future time. 6. The Town of Jerome shall not be held responsible for any loss of revenue or crop failures experienced as a result of water restrictions placed by the Town. 7. Flood irrigation will not be permitted. 8. A plan for a drip irrigation system must be submitted as provided in Section 16-5-2 below. 9. Each parcel used for viniculture activities shall require a Conditional Use Permit

		10. Conditional Use Permit applications for viniculture activities shall be required to: a. Provide estimated peak monthly water usage for each parcel of viniculture. b. Demonstrate that fifty percent (50%) of the proposed peak monthly water use can be provided through methods other metered distribution, such as catchment, cistern, hauling, greywater or overflow. c. Provide a plan for drip irrigation in conjunction with the site plan. d. Provide a written release holding the Town of Jerome harmless for any loss of revenue, crop failures, or additional expenses experienced as a result of restrictions and regulations imposed by the Town for purposes of controlling water supply, soil erosion, vista protection slope restrictions, water drainage, planning and zoning, and restoration of natural vegetation upon termination of conditional use permit. e. Provide a fully-executed agreement to waive rights and remedies under Arizona Revised Statutes §12-1134 (Prop 207) 11. Viniculture operations are strongly encouraged to utilize organic methods and minimize the use of chemicals. The Town reserves the right to place restrictions in this regard in accordance with regulations or recommendations which may be promulgated by the Town, County, State or Federal government. 12. Town water shall not be provided for irrigation, agriculture or viniculture located outside of Town limits, except as provided herein. 13. Vineyards located outside of Town limits which are in existence and which purchase water from the Town of Jerome as of the adopted date of this Ordinance will be entitled to continue to purchase Town water at rates established from time to time by the governing body, subject to the standards above. 14. Vineyards located outside of Town limits which are in existence and which purchase water from the Town of Jerome as of the adopted date of this Ordinance will be required to submit documentation to the Town regarding the size of the area of their plantings and the number of vines planted. This information will be subject to verification by the Town of Jerome. 15. Any expansion of an existing vineyard outside of Town limits shall be considered a new vineyard for the purposes of this Article, and will not be eligible to purchase water from the Town of Jerome. 16. Vineyards located outside of Town limits which receive water from the Town of Jerome shall be

		subject to all of the provisions of Chapter 13, "Water," of the Jerome Town Code.
Manufacturing incidental to a permitted use	C-1, I-1	1. All products incidental to a permitted use which are manufactured or processed on the premises shall be sold at retail only and on the premises only. 2. Such manufacturing activity shall be restricted to not over fifty (50) percent of the ground floor area of the building allocated to the permitted use, unless in the opinion of the Town Council such activity is not detrimental to public health, safety and general welfare.
Research and Product Development	C-1, I-1	1. All activities shall be conducted entirely within enclosed buildings
All Permitted or Conditional Nonresidential Uses of the Zoning District	C-1	1. All activities, except as otherwise addressed herein, shall be conducted entirely within enclosed buildings. 2. Outdoor storage or display of goods or materials shall be prohibited. 3. Warehousing or indoor storage of goods or materials, exceeding that normally incidental to permitted uses, shall be prohibited.
Wireless Communication Facilities	AR, C-1, I-1	1. New wireless communication facilities shall be stealth design to minimize or mitigate the adverse visual impact through proper design and aesthetics that ensure the communication tower is compatible with the built environment in which it is located. Because of differing circumstances specific to each site, a communication tower that is considered to be stealth in one location may not be considered to be stealth in a different location. Methods of stealth design include, but are not limited to: a) Design that mimics surrounding existing vegetation not to exceed forty feet in height. b) Mounting antennas on existing structures that blend with the architecture of the structure on which the antennas are located. c) Using color schemes that make the communication tower less noticeable. d) Using church steeples, clock towers, bell towers, roof features or other such vertical architectural elements to conceal antennas and equipment. e) Placing antennas on new or existing street signs, outdoor lighting poles, flag poles, windmills (both functional and faux), chimneys, cupolas, silos, smokestacks and utility poles which are designed to match the context and color of the host structure. 2. The applicant shall submit documentation detailing that applicable Federal Communications Commission and Federal Aviation Administration regulations have been reviewed and that the regulations are being complied with or that the communication

		tower is exempt from regulation prior to the issuance of the building permit. 3. The applicant shall submit with the site plan before and after photo simulations showing the tower and surrounding area. 4. Applicants for cellular phone antennas must provide evidence in writing that at least one cellular phone provider is committed to located on the tower. 5. For new towers the applicant shall submit a narrative explanation describing the community necessity for the new tower and resulting increase in coverage. The narrative shall list, and include a discussion of, the pros and cons of each prospective new tower site and co-location opportunity considered (along with maps showing the locations of each site) and shall state the reasons why each of the alternative sites and co-locations was not considered to be feasible. The narrative report shall be accompanied by before and after propagation maps prepared and signed by a radio frequency engineer evidencing that a gap in coverage exists and demonstrating how the proposed tower will eliminate the existing gap. 6. Facilities owned and operated by the Town for its use are not subject to the standards of this table. 7. Collocation of small wireless facilities within a right-of-way that are exempt from zoning pursuant to A.R.S. § 9-592 (I) or (J) do not require a conditional use permit or other zoning approval,
All Permitted or Conditional Nonresidential Uses of the Zoning District	I-1	1. NOISE: At no point on the property line shall the sound pressure level of any individual operation exceed the decibel levels in the designated octave bands of Table 411.a. (Excluding operation of motor vehicles or other transportation facilities.) Sound levels shall be measured with a sound level meter and associated octave band filter manufactured according to standards prescribed by the American Standards Association. Measurements shall be made using the flat network of the sound level meter. Impulsive type noises shall be subject to the performance standards provided that such noises shall be capable of being accurately measured with such equipment. Noise capable of being so measured, for the purpose of this section, shall be those noises which cause rapid fluctuations of the needle of the sound level meter with a variation of not more than plus or minus two (2) decibels. Noises incapable of being so measured, such as those of an irregular or intermittent nature, shall be controlled so as not to become a nuisance to adjacent uses.

		2. SMOKE: No emission of smoke from any source shall be permitted to exceed a greater density than that density described as No. 1 on the Ringleman Chart. However, smoke may be emitted, which is equal to but not darker than No. 2 on the Ringleman Chart, for not more than four (4) minutes in any thirty (30) minute period. For the purpose of grading the density of smoke, the Ringleman Chart, as published by the U.S. Bureau of Mines shall be the standard. 3. GLARE OR HEAT: Any activity producing intense glare or heat shall be performed within a completely enclosed building in such a manner as not to create a nuisance or hazard along lot lines. 4. VIBRATION: No vibration shall be permitted which is discernible beyond the lot line to the human sense of feeling for three (3) minutes or more duration in any one (1) hour of the day between the hours of 7:00 a.m. to 7:00 p.m., or of thirty (30) seconds or more duration in any one (1) hour during the hours of 7:00 p.m. and 7:00 a.m. 5. FLY ASH, DUST, FUMES, VAPORS, GASES AND OTHER FORMS OF AIR POLLUTION: No emission shall be permitted which can cause damage to health, to animals, or vegetation, or other forms of property, or which can cause any excessive soiling. 6. LIQUIDS AND SOLID WASTE: No wastes shall be discharged in the public sewage system which endangers the normal operation of the public sewage system. 7. ODORS: No emission of odorous gases or other odorous matter shall be permitted in such quantities as to be offensive in such a manner as to create a nuisance or hazard beyond the property lines.

Table 411.a: Octave Bands

Octave band cycles per second	**Maximum sound pressure** level in decibels .0002 dynes per CM^2
0 - 75	72
75 - 150	67
150 - 300	59
300 - 600	52
600 - 1200	46
1200 - 2400	40
2400 - 4800	34
Above 4800	32

SECTION 412. DEVELOPMENT STANDARDS MATRIX

Table 412: Development Standards Matrix

	Zone					
Development Standard	AR	R1-10	R1-5	R-2	C-1	I-1
Minimum Lot Area	10,000 SF	10,000 SF	5,000 SF	5,000 SF	None	None
Minimum Lot Width	100 Feet	100 Feet	50 Feet	50 Feet	None	None
Minimum Square Footage of Dwelling/Building	850 SF of enclosed floor space exclusive of any attached garage	850 SF of enclosed floor space exclusive of any attached garage	850 SF of enclosed floor space exclusive of any attached garage	850 SF of enclosed floor space exclusive of any attached garage	None	None
Maximum Lot Coverage	40%, including main building and all accessory buildings	40%, including main building and all accessory buildings	60%, including main building and all accessory buildings	60%, including main building and all accessory buildings	None	None
Setbacks						
Front[1]	20 Feet	20 Feet	10 Feet	10 Feet	10 Feet	10 Feet
Rear	20 Feet[2]	20 Feet[2]	20 Feet[2]	20 Feet[2]	20 Feet[3]	20 Feet[3]
Side	10 Feet[4]	10 Feet[4]	5 Feet[4]	5 Feet[4]	Notes[4, 5]	Notes [4, 5]
Maximum Building Height	25 Feet[6]	25 Feet[6]	25 Feet[6]	25 Feet[6]	25 Feet[7]	25 Feet[7]
Accessory Buildings[8]						
Setbacks	Detached accessory buildings shall meet all required setbacks and maintain a space of five (5) feet from the main building or other structures.	Detached accessory buildings shall meet all required setbacks and maintain a space of five (5) feet from the main building or other structures.	Detached accessory buildings shall meet all required setbacks and maintain a space of five (5) feet from the main building or other structures.	Detached accessory buildings shall meet all required setbacks and maintain a space of five (5) feet from the main building or other structures.	Detached accessory buildings shall meet all required setbacks and maintain a space of five (5) feet from the main building or other structures.	Detached accessory buildings shall meet all required setbacks and maintain a space of five (5) feet from the main building or other structures.
Maximum Height	Detached accessory buildings shall be constructed to a height not greater than fourteen (14) feet to the peak or highest point of the roof, as defined in "Accessory Building, Height of."	Detached accessory buildings shall be constructed to a height not greater than fourteen (14) feet to the peak or highest point of the roof, as defined in "Accessory Building, Height of."	Detached accessory buildings shall be constructed to a height not greater than fourteen (14) feet to the peak or highest point of the roof, as defined in "Accessory Building, Height of."	Detached accessory buildings shall be constructed to a height not greater than fourteen (14) feet to the peak or highest point of the roof, as defined in "Accessory Building, Height of."	Detached accessory buildings shall be constructed to a height not greater than fourteen (14) feet to the peak or highest point of the roof, as defined in "Accessory Building, Height of."	Detached accessory buildings shall be constructed to a height not greater than fourteen (14) feet to the peak or highest point of the roof, as defined in "Accessory Building, Height of."

[1]The minimum front yard setback shall be ten (10) feet, except that where adjacent buildings within one hundred (100) feet establish a different front building setback, a new building may align with that established setback. Where a lot is situated between two (2) such buildings, the front yard setback shall be established by a line connecting the nearest front corners of the adjacent buildings. Where a lot has frontage on two (2) streets, the

required front yard shall be provided on both streets unless access is denied to one of the streets, then a rear yard shall be required.

[2] There shall be a rear yard of not less than twenty (20) feet in depth, except where the rear lot line is in common with, or separated by an alley from the side lot line of another lot, there shall be a rear yard of not less than ten (10) feet in depth. Where the rear lot line abuts an alley, the required rear yard shall be measured from the center line of the alley.

[3] There shall be a rear yard of not less than twenty (20) feet in depth, except where the rear lot line is in common with or separated by an alley from the side lot line of a lot in a commercial or industrial zone, there shall be a rear yard of not less than ten (10) feet in depth.

[4] Where a side lot line abuts a street, the side yard shall be considered a front yard for the purpose of determining width.

[5] Where the side lot line is in common with the side lot line of a property in a commercial or industrial zone, no side yard shall be required on that side. Where the side lot line is in common with the side lot line of a property in a residential zone, the side yard requirements of the residential zone shall apply to that side yard, provided nothing shall require such a side yard to be greater than ten (10) feet in width.

[6] As defined in "Building, Height Of". On slopes over forty-five percent (45%) there will be a one (1) foot reduction in height for each additional five percent (5%) of slope or portion thereof. Notwithstanding these provisions, no face of any building shall exceed thirty-five (35) feet above the low point of original grade as defined in "original grade". (see Appendix for diagrams).

[7] The maximum building height shall not exceed that established by any building within one hundred (100) feet on either or both sides of the lot. Where more than one such building is within one hundred (100) feet of the lot then the maximum building height of the nearest such building shall be the maximum building height of the lot. Except that where the lot is between two (2) such buildings, each within one hundred (100) feet of the lot, then the maximum building height of the center of this lot shall be that established by a line joining the highest point of the other such buildings. Nothing in the above shall require that the maximum building height in this district be less than twenty-five (25) feet. (see Appendix for diagrams). Notwithstanding these provisions no face of any building shall exceed thirty-five (35) feet above the low point of original grade as defined in "original grade."

[8] Accessory buildings shall be considered in determining yard, lot and area requirements. Accessory buildings shall not be used for human habitation.

ARTICLE V: USE REGULATIONS

SECTION 501. NONCONFORMING SITUATIONS

A. DEFINITIONS

A nonconforming situation occurs when, on the effective date of this Ordinance, any prior Ordinance, or on the effective date of an Ordinance text amendment or rezoning, an existing lot, structure, building, sign, development, or use does not conform to the regulations currently applicable to the district in which the lot, structure, building, sign, development or use is located.

[Ord. No. 293]

B. PURPOSE

While permitting the use and maintenance of nonconforming structures, this section is intended to limit the number and extent of nonconforming uses and structures by prohibiting their being moved, altered, enlarged, or restored after destruction in a manner which would increase the discrepancy between conditions existing at the time of adoption of the Ordinance and the standards prescribed in this Ordinance, except as provided for by A.R.S. 9-462.02.

C. APPLICATION

1. Any nonconforming structure or portion thereof declared unsafe by a proper authority may be restored to a safe condition.
2. The lawful use of land, buildings, or structures existing on the effective date of this Ordinance, June 14, 1977, or any amendment thereof, may continue even though such use does not conform to the provisions of this Ordinance. However, if such nonconforming uses are discontinued for a period of six (6) months, any future use of said land or structure shall be in conformity with the provisions of this Ordinance.
3. No nonconforming use shall be extended to replace a conforming use.
4. A nonconforming use of a building or lot shall not be changed to another nonconforming use whatsoever. Changes in use shall be made only to a conforming use.
5. Once changed to a conforming use, no building or land shall be permitted to revert to a nonconforming use.
6. A nonconforming building may not be reconstructed or structurally altered during its life to an extent which would increase the discrepancy between conditions existing at the time of the adoption of this Ordinance and the standards prescribed in this Ordinance.
7. No repairs, alterations, or additions shall be made to any building used for a nonconforming use or a nonconforming building which has been damaged by fire, flood, wind, earthquake, explosion or other calamity, act of God, act of the public enemy, or by the owner, to an extent which would increase the discrepancy between conditions at the time of such damage and the standards prescribed in this Ordinance.
8. A nonconforming use shall not be extended, but the extension of a lawful use to any portion of a nonconforming building which existed prior to the enactment of this Ordinance shall not be deemed the extension of such nonconforming use.
9. Nothing herein contained shall require any change in plans, construction, or designated use of a building for which a building permit has been issued prior to the enactment of this Ordinance, provided the construction shall be diligently prosecuted within sixty (60) days of the date of this Ordinance, and the building is completed and used according to such plans as filed within one (1) year from the date of the Ordinance.
10. A building, or portion thereof, designed or clearly intended for a nonconforming use, but not so used at the time of the effective date of this Ordinance, may be used for such nonconforming

purpose if the use commences within six (6) months of the effective date of this Ordinance and no alteration occurs except as permitted herein. If the use does not commence within six (6) months, the building shall thereafter be used only in conformity with this Ordinance.

11. Notwithstanding any other provisions of this Ordinance, any automobile wreck yard or any other junkyard in existence in any zone at the date of enactment of this Ordinance shall (have), at the expiration of three (3) from such date, become a prohibited and unlawful use and shall be (have been) discontinued.
12. Whenever the boundaries of a zone shall be changed so as to transfer an area from one zone to another zone of a different classification, the foregoing provisions shall also apply to any nonconforming uses existing therein.
13. Nothing in this article shall be interpreted as authorization for approval of the continuance of the use of a building or premises in violation of regulations in effect at the time of the effective date of this Ordinance.
14. Notwithstanding any other provisions of this Ordinance, a building may be constructed on any lot of record before the adoption of this Ordinance in any zone in which such buildings are permitted even though such lot fails to meet the area or width requirements for with the zone, except that such construction shall conform to any lot coverage, yard and parking and loading requirements of the zone.
15. Where two (2) or more vacant contiguous lots of record, having continuous frontage, are owned by the same person at the time of the passage of the controlling ordinance, the land included in the lots shall be considered to be an undivided parcel and no portion of said parcel shall be used as a building site or sold which does not meet the area and width requirements of the zone in which the lot is located.

[Ord. No. 293]

SECTION 502. GENERAL PROVISIONS

A. APPLICATION

Except as hereinafter provided, no building, structure, or premise shall be used and no building or structure or part thereof shall be constructed, altered, repaired, improved, moved, removed, erected, demolished, or materially altered except in conformity with the provisions of the zone in which it is located. The provisions of this section are applicable to all zoning districts. Any use that is not specifically permitted is hereby declared to be a prohibited use, except as hereinafter provided.

B. USE RESTRICTIONS

1. PRINCIPAL USES: Only those uses and groups of uses specifically designated as "Permitted Principal Uses" in zoning district regulations shall be permitted as principal uses; all other uses shall be prohibited as principal uses, except as otherwise provided herein.
2. CONDITIONAL USES: Certain specified uses designated as "Conditional Uses" may be permitted as principal uses subject to special conditions of location, design construction, operation, and maintenance specified in this Ordinance or imposed by the Planning and Zoning Commission.
3. ACCESSORY USES: Uses that are normally accessory and incidental to a permitted principal or conditional uses shall be permitted as specified in this Ordinance.
4. UNSPECIFIED USES: Whenever a use is proposed which is not listed as a permitted or conditional use in any zone district, the Zoning Administrator shall complete a review of the proposed use to determine its basic characteristics and similarity to existing permitted uses and make a determination as to whether the proposed use is permitted within the zone district. The Zoning Administrator's determination can be appealed as specified in this Ordinance.

C. NONCONFORMING LOTS OF RECORD

1. Notwithstanding any other provisions of this ordinance, a building may be constructed on any lot of record before the adoption of this Ordinance in any zone in which such buildings are permitted, even though such lot fails to meet the area or width requirements for within the zone, except that such construction shall conform to any lot coverage and yard requirements of the zone.
2. Where two (2) or more vacant contiguous lots of record are owned by the same person at the time of the passage of the controlling ordinance, the land included in the lots shall be considered to be an undivided parcel and no portion of said parcel shall be used as a building site or sold which does not meet the area and width requirements of the zone in which the lot is located.

D. REDIVIDING OF RECORDED LOTS

No lot may be divided to create a lot not in conformance with these regulations, unless. No lot shall be divided or combined in any manner other than through subdivision procedures as specified by the Subdivision Regulations.

E. STREET AND UTILITY REQUIREMENTS

1. All lots shall abut a public street or legally recorded easement.
2. A building permit shall not be issued for a lot which abuts an undedicated portion of a partly-dedicated public street.
3. A building permit shall not be issued for any lot for which public sewerage or water supply is not available, unless and until the proposed mode of water supply and sewage disposal has been reviewed and approved in writing by the Yavapai County Health Department.

F. DRIVEWAYS

1. General Requirement

All lots shall obtain vehicular access to a public street, either directly or through an approved shared-access easement, private access easement, or private street. No driveway shall be constructed, relocated, widened, resurfaced, altered, or otherwise modified without first obtaining the necessary permit(s) from the Town.

2. Driveways May Be Denied

   The Town may deny additional driveway connections where:

   a. Reasonable access already exists through an existing driveway or easement;

   b. Multiple driveways would create traffic or safety concerns;

   c. There is not sufficient space for adequately extending a driveway to park a vehicle entirely outside the right-of-way; or

   d. The property does not provide sufficient on-site area to:

      i. Allow vehicles to safely enter and exit the property; or

      ii. Prevent vehicles from routinely backing into the public street when leaving the site.

3. Driveway Surfacing

   Driveway surfacing shall extend from the parking area to the edge of the public roadway pavement and shall continue within the public right-of-way to meet existing roadway surfacing, or to a point designated by the Town Engineer where future roadway surfacing is anticipated.

   Acceptable surfacing materials shall be established by Town standards and may include asphaltic concrete, portland cement concrete, chip seal, permeable pavement, or other approved materials.

4. Residential Development

   Single-family residential driveways may remain unsurfaced unless otherwise required by the Town Engineer. Where surfacing is installed, it shall comply with Section 502.F.4.

5. Multifamily and Nonresidential Development

   All multifamily and nonresidential development shall provide paved driveway access between the public street and all required parking, loading, and circulation areas, unless modified by the Town Engineer to meet site constraints such as, but not limited to, topography, existing nearby access, and recorded easements. Such surfacing shall extend through the right-of-way as required by the Town Engineer.

6. Driveway Alterations

   Any relocation, widening, reconstruction, pavement change, additional curb cut, or modification of an existing driveway shall require a permit approved by the Town.

7. Culverts and Drainage

   Where a culvert is required, culvert ends shall be protected against crushing and erosion and shall conform to Town engineering standards. Alternative treatments may be approved by the Town Engineer.

8. Access Management

   The number, width, spacing, and location of driveways shall be subject to approval by the Town Engineer. The Town may require shared driveways, cross-access easements, reciprocal access agreements, or driveway closures when necessary to promote traffic safety and efficient roadway operations.

G. SITE UNSUITABILITY

No land shall be used or structure erected where the land is held by the Commission to be unsuitable for such use or structure by reason of flooding, concentrated runoff, inadequate drainage, adverse soil or rock formation, extreme topography, low percolation rate or bearing strength, erosion susceptibility, or any other features likely to be harmful to the health, safety and general welfare of the community. The commission, in applying the provisions of this section, shall state in writing the particular facts upon which its conditions are based. The applicant shall have the right to present evidence contesting such determination to the Council if he desires, whereupon the Council may affirm, modify, or withdraw the determination of the unsuitability.

H. DUMPING OR DISPOSAL

1. The use of land for the dumping or disposal of scrap iron, junk, garbage, rubbish, or other refuse, or of ashes, slag, or other industrial wastes or by-products, shall be prohibited in every district except as otherwise provided in this Ordinance.
2. The dumping of dirt, sand, rock or other material excavated from the earth shall be permitted in any district, provided that the surface of such material is graded, leaving the ground surface in a condition suitable for other use permitted in the district, provided that such fill does not so increase the elevation of the site as to prevent its development or use for other purposes and provided that such does not increase the susceptibility of the ground to erosion, landslide, flooding, or result in any other dangerous condition.
3. No person, firm, or corporation shall strip, excavate, or otherwise remove topsoil for sale or for use other than on the premises from which the same shall be taken, except in connection with the construction or alteration of a building on such premises and excavation or grading incidental thereto.
4. No yard or other open space surrounding an existing building in any residential zone, or which is hereinafter provided around any building in any residential zone, shall be used for the storage of junk, debris, or abandoned or inoperable vehicles; except as specifically permitted herein, and as provided and regulated in any other applicable Town Ordinances.

I. YARD, LOT, AND AREA REQUIREMENTS

1. No building shall be erected; nor shall any existing building be altered, enlarged, moved, or rebuilt, nor shall any open space surrounding any building be encroached upon or reduced in any manner, except in conformity with the yard, lot, area and building location regulations hereinafter designated for the zone in which such building or open space is located, except, as otherwise specifically provided.
2. No yard or other open space provided about any building for the purpose of complying with the provisions of these Restrictions shall be considered as a yard or open space for any other building; and no yard or other open space on one (1) lot shall be considered as a yard or open space for a building on any lot.
3. Awnings, fire-escape stairs, window-type refrigeration units, suspended or roof evaporative coolers, and forced air furnaces may not project more than five (5) feet over any required yard, provided that they shall be no closer than three (3) feet to any lot line.
4. Architectural details such as canopies, cornices, and eaves may project not more than three (3) feet over any required yard, provided that they shall be no closer than three (3) feet to any lot line.
5. Sills, leaders, be1t courses and similar ornamental features may project not more than six (6) inches over or into any required yard.
6. Accessory Buildings (attached) – A private automobile garage, carport or accessory building having any part of a wall in common with a dwelling shall be considered an integral part of the main building in determining yard, lot, and area requirements.

7. Accessory Buildings (detached) – Any detached accessory building or swimming pool in any zone shall not be located in the front yard, shall be at least five (5) feet from the main structure, shall be at least five (5) feet from the rear and interior side lot lines, and shall maintain side yard setbacks from the street side lot lines as required for the main structure in that zone.
8. No automobile service station pump shall be located closer than twelve (12) feet to a street property line.
9. Except as provided herein, every part of a required yard shall be open to the sky and unobstructed. Trees, shrubbery, etc., shall not be considered obstructions.
10. No portion of any deck shall be located within five (5) feet of the lot line except in those districts where residential use is not a permitted use. In those districts, decks should conform to the required yard for that zone. Decks shall not encroach into any public easement. Square footage of decks shall be included in lot coverage for each zoning district.

[Ord. No. 374]

J. BUILDING HEIGHT REQUIREMENTS

1. No building shall be erected, reconstructed, or structurally altered to exceed in height the limit hereinafter designated for the zone in which such building is located, except as otherwise specifically provided.
2. Height regulations established elsewhere in this Ordinance shall not apply:
   a. In any district, to church spires, belfries, cupolas and domes not for human occupancy, monuments, water towers, flagpoles, non-commercial radio or television antennas, provided that such structures and antennas shall be so located and constructed that if it should collapse, its reclining length would still be contained on the property on which it was constructed.
   b. In industrial districts, to chimneys, smokestacks, derricks, conveyors, grain elevators, or similar structures wherein the industrial process involved customarily requires a height greater than otherwise permitted, provided that such structure shall be so located and constructed that if it should collapse, its reclining length would still be contained on the property on which it was constructed.
3. In any district, the height of a deck may not exceed twenty-seven (27) feet from the natural grade.

[Ord. No. 374]

K. WALLS AND FENCES

1. No freestanding wall or fence shall be constructed until a permit for such construction has been issued by the Building Inspector. No such permit shall be issued until the application for such permit has been reviewed and approved by the Zoning Administrator and Historic Preservation and Design Review Board in accordance with the provisions of Section 303 and Section 304.
2. In any residential or commercial zone, no wall or fence over three (3) feet high shall be constructed or maintained nearer to the street line than the front and side walls of the building erected, nor be more than six (6) feet in height on any side or rear-lot-line. Provided, however, that open wire fences exceeding the above heights may be built around schools and other public or quasi-public institutions when necessary for the safety or restraint of the occupants thereof.
3. No fence or wall shall contain barbed wire, electrical current or charge of electricity, broken glass, or similar hazardous materials or devices, provided, however, that fences enclosing storage areas in industrial districts may use barbed wire so long as such wire is located not less than six (6) feet above grade.

L. EXTERIOR LIGHTING

[CODIFIER'S NOTE: This subsection was rewritten with Ordinance 490 and moved to new **Section 502.1.**]

M. REMOVAL OR DEMOLITION OF BUILDINGS OR STRUCTURES

No building or structure which has been wholly or partially erected on any property located within the Town of Jerome shall be demolished or removed until a permit for such demolition or removal has been issued by the Zoning Administrator. A permit for removal or demolition of any building or structure shall not be issued until the application for such a permit has been reviewed and approved by the Historic Preservation and Design Review Board in accordance with the provisions of Section 304.

N. HOME OCCUPATIONS

[CODIFIER'S NOTE: This subsection was moved to Table 411: Use/Zone-Specific Standards in Section 411 and the use renamed to Live/Work Dwelling with Ordinance 497.]

O. ANIMALS AND PETS

Except as otherwise permitted in this Ordinance, the keeping of animals in connection with each dwelling shall not exceed a total of three (3) pets, such as dogs, cats, and similar household pets, exclusive of animals under the age of six (6) months, and exclusive of birds, fish and other pets which at all times are kept within a fully enclosed building or accessory building, and which do not create odor or sound which is detectable on an adjoining lot.

P. OFF-STREET PARKING REQUIREMENTS

1. Automobile off-street parking must be provided as required in Section 510.
2. Mobile homes, house trailers, commercial trailers, boat trailers, campers, or travel trailers shall not be stored, parked, or located in any zone other than as listed in the zone regulations, except that the storage of one boat trailer and not more than one uninhabited camper or uninhabited travel trailer shall be allowed for each residence. Such vehicles may not be stored in front yard of a residence.
3. A proposed development shall have adequate provisions for such items as convenience of access for public service vehicles, such as garbage collection vehicles, movement of emergency vehicles, and convenience of access to parking sites and other site improvements by site residents or users.
4. Ingress, egress, internal traffic circulation, off-street parking facilities, loading and service areas, and pedestrian ways shall be so designed as to promote safety and convenience.

Q. BEEKEEPING

[CODIFIER'S NOTE: This subsection was rewritten with Ordinance 497 and moved to new Table 411: Use/Zone-Specific Standards in Section 411.]

R. SWIMMING POOLS

1. Construction
    a. All swimming pools within the Town of Jerome are to be designed and constructed in accordance with the International Swimming Pool and Spa Code, 2018 Edition, published on or after August 31, 2017, by the International Code Council Inc.
2. Enclosures
    a. A swimming pool, or other contained body of water with eighteen inches or more in depth at any point and that is wider than eight feet at any point and is intended for swimming, shall be protected by an enclosure surrounding the pool area, as provided in this section.
    b. A swimming pool or other contained body of water required to be enclosed by subsection A, whether a below-ground or above-ground pool, shall meet the following requirements:

1) Be entirely enclosed by at least a five-foot wall, fence, or other barrier as measured on the exterior side of the wall, fence, or barrier.

2) Have no openings in the wall, fence, or barrier through which a spherical object four inches in diameter can pass. Any horizontal parts of a wall, fence, or barrier must either:

   i. Be spaced at least 45 inches apart vertically, or

   ii. Be located on the pool side of the barrier, in which case the barrier must not have any horizontal openings wider than 1¾ inches.

   iii. Wire mesh or chain link fences shall have a maximum mesh size of one and three-quarter inches measured horizontally.

3) The wall, fence, or barrier shall not contain openings, handholds, or footholds accessible from the exterior side of the enclosure that can be used to climb the wall, fence or barrier.

4) The wall, fence or barrier shall be at least twenty inches from the water's edge.

5) Gates for the enclosure shall:

   i. A pool gate must be self-closing and self-latching. The latch must either be at least 54 inches above the ground, or be located on the pool side of the gate with the release mechanism at least 5 inches below the top and no openings larger than ½ inch within 24 inches of the release. Alternatively, the gate may be secured with a padlock or similar locking mechanism that requires a key, electric opener, or combination, in which case the latch may be at any height.

   ii. Open outward from the pool.

c. If a residence or living area constitutes part of the enclosure required by subsection B for a swimming pool or other contained body of water in lieu of the requirements of subsection B, there shall be one of the following:

1) Between the swimming pool or other contained body of water and the residence or living area, a minimum four-foot wall, fence, or barrier to the pool area which meets all of the requirements of Section502.R.2.b.1-.5.

2) The pool shall be protected by a motorized safety pool cover which requires the operation of a key switch that meets the American Society of Testing and Materials emergency standards 13-89 and which does not require manual operation other than the use of the key switch.

3) All ground-level doors or other doors with direct access to the swimming pool or other contained body of water shall be equipped with a self-latching device that meets the requirements of Section 502.R.2.b.5.i. Emergency escape or rescue windows from sleeping rooms with access to the swimming pool or other contained body of water shall be equipped with a latching device not less than fifty-four inches above the floor. All other openable dwelling unit or guest room windows with similar access shall be equipped with a screwed-in-place wire mesh screen, or a keyed lock that prevents opening the window more than four inches, or a latching device located not less than fifty-four inches above the floor.

4) The swimming pool shall be an aboveground swimming pool that has non-climbable exterior sides that are a minimum height of four feet. Any access ladder or steps shall be removable without tools and secured in an inaccessible position with a latching device not less than fifty-four inches above the ground when the pool is not in use.

d. This section does not apply to:

1) A system of sumps, irrigation canals, irrigation, flood control or drainage works constructed or operated for the purpose of storing, delivering, distributing or conveying water.

2) Stock ponds, storage tanks, livestock operations, livestock watering troughs or other structures used in normal agricultural practices.

3) Public or semi-public swimming pools.

4) A swimming pool or contained body of water or barrier constructed prior to the effective date of this article.

e. A person on entering into an agreement to build a swimming pool or contained body of water or sell, rent or lease a dwelling with a swimming pool or contained body of water shall give the buyer, lessee or renter a notice explaining safety education and responsibilities of pool ownership as approved by the Arizona Department of Health Services.

3. Location

a. The requirements for the location of permanent pools shall be the same as the requirements for the location of accessory buildings and structures within the property's zoning district, except that:

1) Swimming pools shall be located on a lot in compliance with all applicable setback, grading, drainage, and other requirements of this Ordinance. Pools shall be designed, constructed, operated, and maintained so that drainage, overflow, backwash, or water released from the pool does not drain onto adjacent properties or adversely impact adjacent properties or public rights-of-way.

4. Permit Required

b. No swimming pool, except temporary pools, shall be constructed, enlarged, or altered until a permit has been obtained from the Town. Application for a permit shall be accompanied by plans and specifications in sufficient detail to indicate the following:

1) Lot or plot plan showing lot lines, easements, if any, pool area plan, and elevations with dimensions drawn to scale.

2) Pool dimensions, depths and volume in gallons.

3) Type and size of filter system, filtration and backwash capacities.

4) Pool piping layout, with all pipes and valves shown, and the type of materials to be used.

5) Size, type, and rated capacity of the pool pump.

6) Location and type of water supply, and waste disposal system.

7) Location and type of all electrical fixtures.

8) Conformity with provisions of this Section as required.

9) Conformity with provisions of Town Building, Plumbing and Electrical Codes as required.

10) Conformity with The International Swimming Pool and Spa Code

c. Exceptions

1) Any above-ground pool or water feature designed to hold less than 5,000 gallons or that is less than 18 inches deep shall not require a permit.

SECTION 502.1 GENERAL PROVISIONS – EXTERIOR LIGHTING

[Section 502.1 created with Ord. No. 490]

A. INCORPORATION BY REFERENCE

A.R.S. Title 49, Chapter 7, Light Pollution is hereby incorporated by reference

B. PURPOSE

This section is intended to establish procedures and standards that ensure minimal light pollution, reduce glare, increase energy conservation, and afford every citizen and business of Jerome the flexibility to engage in the pursuit of safe, inexpensive lighting for the purpose of commerce and private use without detrimentally impacting the pristine nighttime environment free from light pollution, waste, trespass, or clutter.

C. APPLICABILITY

1. This chapter shall apply to all outdoor lighting, including but not limited to, search, spot, or floodlights for:
    a. Buildings and Structures;
    b. Recreational Areas;
    c. Parking Lot Lighting;
    d. Landscape Lighting
    e. Other Outdoor Lighting
2. New lighting shall meet the requirements of this Code with regard to shielding and lamp type. The total outdoor light output after the new lighting is installed shall not exceed that on the site before the new lighting was installed, or that is permitted by this Code, whichever is less.
3. If the total cumulative increase in floor area is greater than 50 percent for single family residential or greater than 25 percent for all other uses, or if the total cumulative cost of any exterior modification, alteration or repair is greater than 25 percent of the valuation of the building as determined by the Zoning Administrator, then all exterior lighting fixtures shall comply with this Code. Cumulative modification, replacement, or repair of outdoor lighting constituting 25 percent or more of the permitted lighting output level for the parcel, no matter the actual amount of lighting already on the site, shall require all exterior lighting to comply with this Code.
4. Exemptions
    a. **Emergency Lighting**

        Lighting used only under emergency conditions, as declared by the Governor of the State of Arizona, Town of Jerome Mayor, or authorized County or Town public safety representative, shall not be subject to this Section 502.1

    b. **Seasonal Lighting**

        Temporary seasonal lighting between the months of October and January 15 shall not be subject to this Section 502.1, provided such lighting does not create glare to motorists or result in light trespass onto adjacent properties.

    c. **Lighting Required by FAA or FCC**

        Lighting required by the Federal Aviation Administration, or the Federal Communications Commission shall not be subject to this Section.

    d. **Special Events**

Special events that have been issued a special event permit shall be allowed temporary lighting for the duration of the event, provided such lighting does not create glare to motorists or result in light trespass onto adjacent properties.

e. **Street Lighting**

With the exception of shielding requirements, this Code does not apply to street lighting within Town and state rights-of-way.

5. Nonconforming Lighting

a. Existing historic nonconforming lighting in use prior to the adoption of this ordinance may continue to be used; if historic fixtures are damaged, they may be restored or repaired in efforts to preserve their historic nature.

b. Lighting that does not conform to all provisions of this Code shall be brought into compliance, in accordance with Section 502.1(C)(3). Until this time, no modification or replacement shall be made to a nonconforming fixture unless the fixture thereafter conforms to the provisions of this Code, except that identical lamp replacement is allowed.

c. In the event that an outdoor lighting fixture is abandoned or damaged to the point of requiring repairs for safe operation, the repaired or replacement fixture shall comply with the provisions of this Code.

D. DEFINITIONS

As used in this Code, unless the context clearly indicates otherwise, certain words and phrases shall mean the following:

1. *Abandonment* means the discontinuation of use for a period of six months.
2. *Adaptive Controls* means hardware and/or electronics, used in conjunction with outdoor light fixtures, intended to dynamically alter or adjust the operation of those fixtures. Examples of adaptive controls include, but are not limited to, motion/occupancy sensors, dusk-to-dawn ('astronomical') timers, and photocells.
3. *Class 1 Lighting* means all outdoor lighting used for, but not limited to, outdoor sales or eating areas, assembly or repair areas, advertising and other signs, recreational facilities, and other similar applications where color rendition is important.
4. *Class 2 Lighting* means all outdoor lighting used for, but not limited to, illumination for walkways, roadways, equipment yards, and parking lots where general illumination of the grounds is the primary concern.
5. *Class 3 Lighting* means any outdoor lighting used for decorative effects, including but not limited to architectural illumination, flag monument lighting, and illumination of trees, bushes, etc.
6. *Correlated Color Temperature (CCT)* means the temperature of a source of blackbody radiation whose spectrum best approximates the spectrum of a particular light source, expressed in units of Kelvins. Lamps with a CCT greater than 4000K are considered "cool" sources.
7. *Direct Illumination* means illumination resulting from light emitted directly from a lamp, luminaire, or reflector, not light diffused through translucent signs, or reflected from other surfaces such as the ground, building faces, or luminaire optics.
8. *Footcandle (abbreviated 'fc')* means a unit of illuminance or illumination, equivalent to the illumination produced by a source with luminous intensity of one candela at a distance of one foot and equal to one lumen incident per square foot (approximately 10.764 lux).

9. *Fully Shielded Fixture* means that fixtures are shielded in such a manner that light rays emitted by the fixture, either directly from the lamp or indirectly from the fixture, are projected below a horizontal plane running through the lowest point on the fixture where light is emitted.
10. *Initial Lumens* means the lumens rating of a lamp at the time of manufacture, not accounting for losses due to normal lamp aging, or the lumens rating for a brand new light bulb. Initial lumens are measured by manufacturers specifications and usually provided along with product packaging.
11. *Installed* means attached, or fixed in place, whether or not connected to a power source.
12. *Lighting Zone* means an overlay zoning system, establishing legal limits for lighting for particular parcels, areas, or districts in a community.
13. *Light Trespass* is spill light falling over property lines that illuminates adjacent grounds or buildings in an objectionable manner.
14. *Lumen* is the unit used to measure the actual amount of visible light, which is produced by a lamp as defined by the manufacturer.
15. *Luminaire* means the complete lighting assembly, less the support assembly.
16. *Lux (abbreviated 'lx')* means a unit of illuminance or illumination equal to one lumen per incident square meter (approximately 0.093 fc).
17. *Multi-class Lighting* means any outdoor lighting used for more than one purpose, when the purpose fall under the definitions for two or more lighting lasses as defined for Class 1, 2 and 3 Lighting above.
18. *Motion Sensing Lighting* means a fixture designed, and properly adjusted, to illuminate an area around a residence or other building by means of switching on a lamp when motion is detected inside an area or perimeter, and switching the lamp off when the detected motion ceases.
19. *Neon Lighting* means lighting using luminous gas filled tubes often formed into text, symbols, or decorative elements. Neon lighting includes tubes with typical diameters of 10 to 20 millimeters filled with neon, argon, xenon, or other gasses and producing various colors of light. Not included are replaceable T-8 (1-inch diameter) and T-12 (1.5-inch diameter) or PL ("compact") fluorescent tubes.
20. *Net Acreage* means the remaining ground area of a parcel after deleting all portions for proposed and existing public right-of-way and undeveloped area.
21. *Opaque* means only that the material must not transmit light from the internal illuminating source: the color of such opaque backgrounds is not restricted.
22. *Outdoor Light Fixtures* means all outdoor illuminating devices, reflective surfaces, lamps, and other devices, either permanently installed or portable, which are used for illumination or advertisement. Such devices shall include, but are not limited to, search, spot, and floodlights for:

    d. Buildings and Structures

    e. Recreational Areas

    f. Parking Lot Lighting

    g. Landscape and Architectural Lighting

    h. Billboards and other Signs (advertising or other)

    i. Street Lighting

    j. Product Display Area Lighting

k. Building Overhangs and Open Canopies

23. *Person* includes a corporation, company, partnership, firm, association, or society, as well as a natural person.
24. *Planning and Zoning Director* means the Director of Planning and Zoning for the Town of Jerome or their designated representative.
25. *Temporary Lighting* means lighting which does not conform to the provisions of this Code and which will not be used for more than one thirty (30) day period within a calendar year. Temporary lighting is intended for uses which by their nature are of limited duration; e.g., holiday decorations, civic events, or construction projects.
26. *Total Outdoor Light Output* means the maximum total amount of light measured in lumens, from all outdoor light fixtures on a property. For lamp types that vary their output as they age (such as high-pressure sodium and metal halide), the initial output, as defined by the manufacturer, is the value to be considered.
27. *Translucent* means light is transmitted from the internal illumination source.
28. *Unshielded* means a fixture that allows light to be emitted above the horizontal directly from the lamp or indirectly from the fixture or a reflector.
29. *Watt* is the unit used to measure the electrical power consumption (not the light output) of a lamp.

E. GENERAL REQUIREMENTS

All light fixtures and streetlamps where able, shall be aimed or shielded so that the direct illumination shall be confined to the property boundaries of the source. Direct illumination must not fall onto or across any public or private street or road. Motion-sensing lighting fixtures shall be properly adjusted, according to the manufacturer's instructions, to turn off when detected motion ceases. All new development, qualified enhancements, and requirements as outlined in 502.1 must follow the Total Light Output requirements indicated in Section 502.1.L..

1. **Class 1 Lighting (High Activity Areas)**

   Lighting used for outdoor sales or eating areas, assembly or repair areas, signage, recreational facilities, and other similar applications where accurate color rendition is important to preserve the effectiveness of the activity. Commonly used in Lighting Zones 2 -4. (See Section 502.1.L)

2. **Class 2 Lighting (Security and Public Safety)**

   Lighting used for illumination of walkways, roadways, equipment yards, parking lots, and outdoor security where general illumination for safety or security of the grounds is the primary purpose. Commonly used in Lighting Zones 1-3. (See Section 502.1.L)

3. **Class 3 Lighting (Decorative and Accent)**

   Lighting used for decorative effects such as architectural illumination, flag and monument lighting, and illumination of landscaping elements. All Class 3 lighting shall be selected, designed, installed, and aimed so that there is a minimum amount of spill beyond the area(s) to be lighted. Commonly used in Lighting Zones 0-2. (See Section 502.1.L)

4. **Multi-Class Lighting**

   Lighting used for more than one purpose, such that the use falls within more than one class as defined for Class 1, 2, or 3 lighting. Multi-class lighting must conform to the standards that apply to the most restrictive included class.

5. **Lighting Plan Submittal Required**

   Whenever new exterior lighting is proposed, the applicant shall submit an application, and as part of the application, shall submit sufficient information to enable the Zoning Administrator to

determine whether proposed lighting complies with this Code. All applications may be subject to review and action by the Planning and Zoning Commission at the discretion of the Zoning Administrator. The lighting plan shall include information as determined by the Zoning Administrator.

6. **Plan Approval**

   If the Zoning Administrator determines that any proposed lighting does not comply with this Code, the associated permit shall not be issued, or the application approved, unless an alternative is approved pursuant to Section 502.1(E)(7) below.

7. **Discretionary Approval of Lighting Alternatives**

   The Zoning Administrator may approve alternative lighting designs, materials, or methods of installation or operation not specifically prescribed by this Code, provided the proposed alternative:

   a. Results in approximate equivalence to the applicable specific requirement of this Code; and

   b. Complies with the purpose of this Code as stated in subsection 502.1(B).

8. **Warm Lighting Requirements and Alternatives**

   a. All Class 2 Lighting shall be either low-pressure sodium (LPS) lamps, narrow spectrum amber LEDs, or warm lighting alternatives not to exceed 2,700 Kelvin

   b. For Class 1 Lighting, a development may be eligible for an additional 10 percent increase in the total lighting output level allowed if 50 percent or more of the Class 1 lighting complies with subsection 502.1(E)(8)(a).

9. **Prohibited Lighting Types and Fixtures**

   a. Outdoor floodlighting by floodlight projection above the horizontal plane is prohibited.

   b. Mercury vapor light bulbs and fixtures.

   c. Lamps emitting a Correlated Color Temperature (CCT) in excess of 4,000 Kelvin

   d. Searchlights, laser source lights, strobe or flashing lights, illusion lights or any similar high intensity light shall not be permitted, except in emergencies by police and fire personnel.

   e. Unshielded lights.

   f. Permanent exposed string lighting for mixed-use and nonresidential uses is prohibited, except as allowed in the subsection immediately below

   g. Ambiance lighting for outdoor dining/bar areas, interior courtyards, and/or event venues may be allowed subject to compliance with all other provisions of this Code and with approval by the Zoning Administrator on a case-by-case basis. In reviewing proposals for such lighting, the Zoning Administrator shall consider lighting types, locations, and time of use. Permanent outdoor string lighting shall not flash, blink, fade, or strobe and shall be included in the total partially shielded lumen count for the property. Such lighting, if allowed by the Zoning Administrator, shall be extinguished immediately after outdoor hours of operation.

10. **Shielding and Light Trespass**

    a. All light fixtures are required to be fully shielded, unless approved by the Planning and Zoning Director pursuant to Section 502.1(E)(6-7).

    b. Partially shielded light fixtures approved by the Zoning Administrator as part of a lighting alternative pursuant to 502.1(E)(7) are limited to a maximum of 3,850 initial lumens per net acre and shall not exceed 1,400 initial lumens per lamp.

c. All light fixtures shall be aimed and shielded so that the direct illumination shall be confined to the property boundaries of the source. Lighting shall not be aimed onto adjacent properties, except in cases of shared parking, pursuant to 502.1(E)(7), shared pedestrian pathways, or for coordinated development sites spanning multiple parcels.

11. **Lighting Controls**

d. Motion Sensors

2) May be used where the sensor is triggered by activity within the property lines and not triggered by activity outside the property lines.

3) Motion-sensing fixtures shall be fully shielded and properly adjusted, according to the manufacturer's instructions, to turn off in a reasonable timeframe after the detected motion ceases.

e. Lighting Time Limitations

4) Except for flagpole lighting and landscape lighting, Class 1, and Class 3 lighting shall be extinguished during nonbusiness hours. Lodging businesses are encouraged to reduce lighting during off-peak hours overnight.

5) Landscape lighting shall be extinguished by close of business or 10:00p.m. whichever is later.

6) Multi-class lighting shall conform to the time limitations of the strictest class.

F. UPLIGHTING, EXTERIOR BUILDING LIGHTING AND SIGN ILLUMINATION

1. Subject to the approval of the Zoning Administrator, uplighting or ground-mounted lighting may be allowed to accent unique features of a building and/or surrounding landscaping such as exceptional architectural features, specimen trees with dense year-round foliage, or large native shrub masses, and shall be designed and installed to minimize glare with special consideration to vehicular and pedestrian traffic.
2. All lighting shall be fully shielded to contain and direct the light onto the feature to be illuminated.
3. All uplighting shall be considered partially shielded for the purposes of calculating lighting output levels.
4. All Class 3 lighting shall be selected, designed, installed, and aimed so that there is a minimum amount of spill beyond the area intended to be lighted.
5. Exterior building lighting may be considered Class 1, 2 or 3 Lighting depending on the size, function, illumination, design, and lighting intent.
6. Soffit-mounted light fixtures should be recessed into the soffit or otherwise fully shielded.
7. Architectural lighting shall only be used to highlight special features. The lighting of expansive wall planes or lighting resulting in hot spots on wall or roof planes shall be prohibited.
8. Lighting above entryways or along building perimeters shall use fully shielded fixtures.
9. Lighting used for all externally illuminated signs shall conform to all restrictions of the Code, shall be fully shielded, and shall be turned off at 10:00p.m. or when the business closes, whichever is later.
10. Outdoor internally illuminated advertising signs shall either be constructed with an opaque background and translucent letters and symbols or with a colored (not white, cream, off-white, yellow, or other light color) translucent background with either translucent or opaque letters and symbols. Opaque means only that the material must not transmit light from the internal illumination source: the color of such opaque backgrounds is not restricted by this section.

Lamps used for internal illumination of such signs shall not be included in the lumens per net acre limit set forth. All internally illuminated signs shall be turned off at 10:00 p.m. or when the business closes, whichever is later.

G. PARKING AREA AND PEDESTRIAN WALKWAY LIGHTING

Parking area and pedestrian walkway lighting is considered Class 2 lighting.

1. Parking lot lighting shall use fully shielded fixtures.
2. Parking lot poles shall not exceed 12 feet in height.
3. Low-level pedestrian walkway lighting;
    a. Considered Class 2 lighting shall utilize fully shielded fixtures;
    b. Shall use shatterproof lamp coverings;
    c. Shall not cause the site to exceed the lighting output level established in this Code;
    d. Shall not be located to present hazards for pedestrians or vehicles.
4. Post or bollard-type walkway lights shall be painted in darker colors such as black, dark brown, dark gray, or other dark earth tones.

H. OUTDOOR DISPLAY LOTS

Light for outdoor display lots shall be considered Class 1, and shall conform to the lumens per acre limits established except as follows:

1. All such lighting shall be fully shielded; partially shielded fixtures shall be prohibited.
2. If the proposed lumens exceed the per-acre limits, the installation shall be designed to achieve no greater than the minimum illuminance levels for the activity as recommended by the Illuminating Engineering Society of North America and shall require approval by the Planning and Zoning Director pursuant to 502.1(E)(7).
3. Outdoor display lot illumination design shall be certified by an Arizona registered engineer as conforming to all applicable restrictions of this Code.
4. Outdoor display lot lighting shall conform to the hours of operation as established under Class 1 lighting standards pursuant to Section 502.1(E)(11)(b).

I. INSTALLATION AND MAINTENANCE

1. For all projects where the total initial output of the proposed lighting equals or exceeds 70,000 fixture lumens, or if the Zoning Administrator determines it is necessary, certification that the lighting, as installed, conforms to the approved plans shall be provided by a certified engineer before a Certificate of Occupancy is issued. Until this certification is submitted, approval for the use of a Certificate of Occupancy shall not be issued for the project.
2. Any proposed change to the type of light source after a permit has been issued shall require submitting a change request to the Zoning Administrator for approval prior to the substitution.

J. TEMPORARY LIGHTING PERMITS

1. The Zoning Administrator may grant a permit for temporary lighting if he or she finds all of the following:
    a. The purpose of which the lighting is proposed is not intended to extend beyond thirty (30) days;
    b. The proposed lighting is designed in such a manner as to minimize light as much as feasible;
    c. The proposed lighting will comply with the general intent of this Code; and
    d. The permit will be in the public interest.

2. The Zoning Administrator shall rule on the application within five (5) days from the date of submission of the request and notify the applicant in writing of their decision. The Zoning Administrator may grant one (1) renewal of the permit for an additional thirty (30) days if they find that, because of an unanticipated change in circumstances, a renewal would be in the public interest. The Zoning Administrator is not authorized to grant more than one temporary permit and one renewal for the same property within one calendar year.

K. VARIANCES

Any person desiring to install an outdoor lighting fixture in violation of this Code may apply to the Board of Adjustment for a variance from the regulation in question. Such variances shall be allowed only as provided by Section 106 of Jerome Zoning Ordinance.

L. TOTAL LIGHTING OUTPUT

1. Lighting Zones
    a. Zone O
        1) Applies to areas in which permanent lighting is not expected or, use is limited to the amount of lighting and period of operation.
        2) Includes undeveloped areas, wilderness parks and preserves, astronomical observatories, or areas where a dark environment is critical.
        3) Special review should be required for any permanent lighting in this zone.
    b. Zone 1
        1) Areas that desire low ambient lighting levels.
        2) Typically single and two family residential communities, rural town centers, business parks and agricultural areas.
        3) May also include developed area in parks or other natural settings.
        4) Can be Class 2 or Class 3 Lighting.
    c. Zone 2
        1) Areas with moderate ambient lighting levels.
        2) Typically multifamily residential use, institutional residential use, schools, churches, hospitals, hotels/motels, recreation facilities, and commercial or business districts with moderate nighttime activities.
        3) Can be used to accommodate outdoor sales or light industry in an area other LZ-1
        4) Can be Class 1, Class 2, or Class 3 Lighting.
    d. Zone 3
        1) Areas with moderately high lighting levels.
        2) Typically include commercial corridors, high intensity suburban commercial areas, town centers, mixed use areas, industrial and shipping and rail yards with high nighttime activity.
        3) Can also include High use recreational facilties and playing fields, regional shopping malls, car dealerships, gas stations, and other nighttime active retail areas.
        4) Can be Class 1, Class 2, or Class 3 Lighting
    e. Zone 4

1) Areas with High Ambient lighting levels
2) Should only be used for special cases and is not appropriate for most cities.
3) May be used for unusual installations such as high-density entertainment, heavy industrial use, or major manufacturing.
4) Typically, only Class 1 lighting is used in this Zone.
5) Currently, there are no known uses for this Class or Zone within the limits of the Town of Jerome.

2. Lighting Applications

Table 502.1.L.2a Residential/Agricultural Lighting Applications

Residential/Agricultural Application	LZ 0	LZ 1	LZ 2	LZ 3	LZ 4
Allowed Lumens Per SF	0.5	1.25	2.5	5.0	7.5
Allowed Base Lumens Per Site	0	3,500	7,000	14,000	21,000
Residential Max Allowed Luminaire Lumens* for Unshielded Luminaires at one entry	0	420	630	630	630
Residential Max Allowed Luminaire Lumens* for Fully Shielded Luminaire	630	1,260	1,260	1,260	1,260
Residential Max Allowed Luminaire Lumens* for Unshielded Luminaires Excluding Main Entry	0	315	315	315	315
Residential Max Allowed Luminaire Lumens* for each Shielded Directional Flood Lighting	0	0	1,260	2,100	2,100
Residential Max Allowed Luminaire Lumens* for each Low Voltage Landscape Lighting	0	315	525	525	525
Residential Max Allowed Luminaire Lumens* for each Landscape Lighting	0	0	1,050	2,100	2,100

*Luminaire Lumens equals initial Lamp Lumens for a lamp, multiplied by the number of lamps in the luminaire

Table 502.1.L.2b Commercial Lighting Applications

Commercial Application	LZ 0	LZ 1	LZ 2	LZ 3	LZ 4
Allowed Lumens Per SF	0.5	1.25	2.5	5.0	7.5
Allowed Base Lumens Per Site	0	3,500	7,000	14,000	21,000
Non-Residential Outdoor Lighting (Hardscape Area Method) Base Allowance	.5/SF of Hardscape	1.25/SF of Hardscape	2/SF of Hardscape	5/SF of Hardscape	7/SF of Hardscape
Commercial Building Entrances/Exits (Allowance is per door. Luminaires must be within 20 feet of the door)	400	1,000	2,000	4,000	6,000
Commercial Building Facades (Allowance is lumens per unit area of building façade that are illuminated. Luminaires must be aimed at the façade and capable of illuminating it without obstruction.)	0	0	8/SF	16/SF	24/SF
Canopies (Allowance is lumens per unit area for total area within drip line of canopy. To use allowance luminaires must be located under the canopy.)	0	3/SF	6/SF	12/SF	18/SF
Outdoor Dining (Allowance is lumens per unit area for the total illuminated hardscape of outdoor dining. Luminaires must be within 2 mounting heights of the hardscape	0	1/SF	5/SF	10/SF	15/SF

Table 502.1.L.2c Lumens vs Watts Comparison Chart

Actual Light Generated	Incandescent Bulbs	Fluorescent Bulbs (CFL)	LED Bulbs (Light Emitting Diode)
Lumens	Watts	Watts	Watts
250	25	4-9	3
450	40	9-13	4-5
800	60	13-15	6-8
1,100	75	18-25	9-13
1,600	100	23-30	16-20
2,000	125	28-40	20-25
2,600	150	30-55	25-28

Chart 502.1.L.2a Kelvin Color Temp Scale Chart

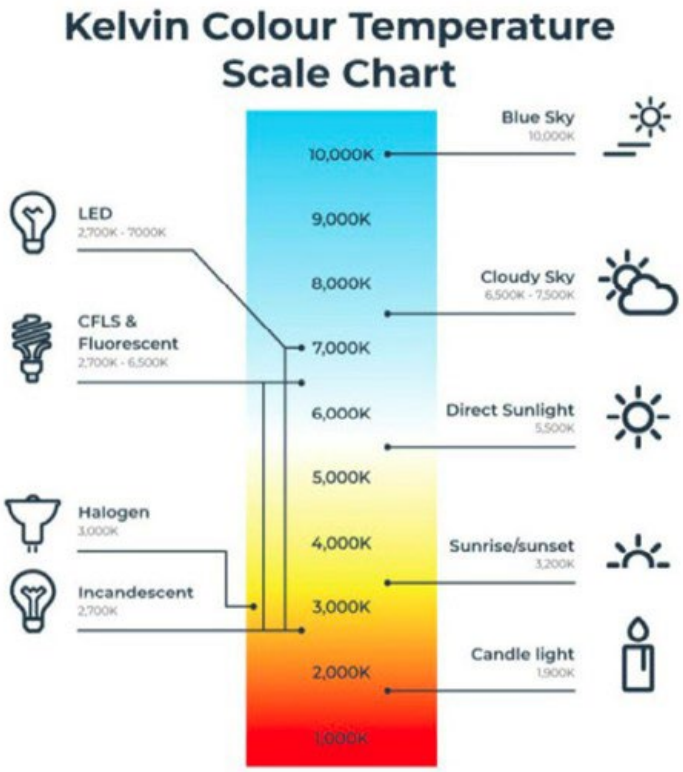

SECTION 503. "AR" ZONE, AGRICULTURAL RESIDENTIAL

[CODIFIER'S NOTE: This subsection was rewritten with Ordinance 497 and moved to new Section 403.]

SECTION 504. "R1-10" ZONE, SINGLE FAMILY RESIDENTIAL

[CODIFIER'S NOTE: This subsection was rewritten with Ordinance 497 and moved to new Section 404.]

SECTION 505. "R1-5" ZONE, SINGLE FAMILY RESIDENTIAL
[CODIFIER'S NOTE: This subsection was rewritten with Ordinance 497 and moved to new Section 405.]

SECTION 506. "R-2" ZONE, SINGLE- AND TWO-FAMILY RESIDENTIAL

[CODIFIER'S NOTE: This subsection was rewritten with Ordinance 497 and moved to new Section 406.]

SECTION 507. "C–1" ZONE, GENERAL COMMERCIAL

[CODIFIER'S NOTE: This subsection was rewritten with Ordinance 497 and moved to new Section 407.]

SECTION 508. "I-1" ZONE, LIGHT INDUSTRIAL

[CODIFIER'S NOTE: This subsection was rewritten with Ordinance 497 and moved to new Section 408.]

SECTION 509. SIGNS

A. PURPOSE

This section provides a set of standards for the design and construction of signs within the Town of Jerome. The purpose of this section is to encourage the preservation of historic buildings and artifacts, to protect the general public from damage and injury, to protect property values, to preserve the beauty and unique character of Jerome, to aid in the free flow of traffic within the town, and to promote the tourist industry, which is important to the economy of Jerome, and the Historic Overlay District.

B. APPLICATION

The provisions of this section are applicable to all zone districts of this Ordinance.

C. DEFINITIONS

Within and for the purposes of this section, the following definitions, and only these definitions, apply.

1. Area – Sign area is calculated as the area within a continuous perimeter that encloses the limits of text and graphics of a sign, together with any frame or other material or color forming an integral part of the display or used to differentiate the sign's message from the background against which it is placed. The area excludes the structure upon which the sign is placed and sign supports.
2. Barber pole – a type of sign used by barbers to signify the place or shop where they perform their craft. The sign includes a staff or pole with a helix of colored stripes (usually red, white, and blue). The pole may be stationary or may rotate, often with the aid of an electric motor.
3. Billboard – Any free-standing sign exceeding fifty (50) square feet in surface area on any one face.
4. Clear vision triangle – A triangle-shaped zone formed by the existing or proposed curb lines of two or more intersecting streets, roads, or alleys and a third line connecting said curb lines at a distance of thirty (30) feet in each direction from the point of the curb line intersection, in order to provide vehicular traffic an unobstructed view of cross traffic at intersections. In locations without curbs, the edge of the drivable surface of the street or road shall be treated the same as a curb.
5. Flying banner – a flexible or rigid pole attached to one side of a flexible fabric, generally in the shape of a feather, used for the primary purpose of advertising or attention getting by the public display of visually communicative images. Such banners are also known and sold under names that include, but are not limited to, "quill sign," "wing banner," "banana banner," "blade banner," "flutter banner," "flutter flag," "bowflag," "teardrop banner," and others. The definition includes functionally similar display devices.
6. Mannequin/skeleton/statue – a styled and three-dimensional representation of the human form.
7. Mural – See definition for *Sign, Painted*.
8. Organization – An organized body of people with a particular non-profit or for-profit purpose, such as a society, association, civic or charitable group.
9. Sign – An object meant to convey a message through the use of words or symbols. A sign can be painted on one or multiple surfaces, be freestanding, supported by a pole or attached to a building. All exterior signs, whether public or private, are regulated by this ordinance.
10. Sign, A-frame – A temporary, movable, freestanding sign placed on but not permanently anchored in the ground. This definition includes T-frame signs and other similar temporary signs. A-frame signs are typically constructed of wood, cardboard, plastic, or other lightweight and rigid material, and are often referred to as sandwich boards.

11. Sign, Aerial – A balloon or other airborne flotation device which is tethered to the ground or to a building or other structure that directs attention to a business, commodity, service, or entertainment conducted, sold, or offered.
12. Sign, Animated or Moving – Any sign or part of a sign which changes physical position or light intensity by any movement or rotation or that gives the appearance of such movement or rotation.
13. Sign, Awning – A sign that is mounted, painted, or otherwise applied on or attached to an awning or other fabric, plastic, or structural protective cover over a door, entrance, or window of a building. A marquee or a canopy is not an awning.
14. Sign, Back-lit – An indirect source of light which illuminates a sign by shining through a translucent surface of a sign, including plastic signs, lit from an internal light source.
15. Sign, Banner – A sign of lightweight fabric or similar nonridged material that is mounted with no enclosing framework.
16. Sign, Bench – A bench or similar device containing either off-premise or on-premise advertising.
17. Sign, Canopy – A sign that is mounted, painted, or otherwise applied on or attached to a freestanding canopy or structural protective cover over an outdoor service area. An awning or a marquee is not a canopy.
18. Sign, Changeable-Copy – A sign, or portion thereof, with characters, letters, or illustrations that can be changed or rearranged manually without altering the face or surface of the sign. Examples include whiteboards, chalkboards, and menu boards.
19. Sign, Commemorative – A sign, tablet, or plaque commemorating or memorializing a person, event, structure, or site.
20. Sign, Construction -A temporary sign providing information about future development or current construction on a site and the parties involved in the project.
21. Sign, Direct Illumination – A sign whose light source is either located in the interior of the sign so that the rays go through the face of the sign, or which is attached to the face of the sign and is perceived as a design element of the sign.
22. Sign, Directional – Signs limited to providing directions necessary or convenient for visitors or clients coming onto a premises including signs marking entrances and exits, parking areas, loading zones, or circulation direction.
23. Sign, Directory – A sign, other than an identification sign, listing the names, uses, or locations of the various businesses or activities conducted within a building or group of buildings, that is centrally located and intended to provide on-site directions.
24. Sign, Electronic Message Board – Signs whose alphabetic, pictographic, or symbolic informational content can be changed or altered on a fixed display screen composed of electrically illuminated segments.
25. Sign, Fascia – A single-faced sign attached flush to a building.
26. Sign, Freestanding – A sign not attached to or supported by a building.
27. Sign, Gas-generated – Gas-generated signs or signs illuminated by gas-generated lighting.
28. Sign, Height – The vertical distance from the ground directly under the sign to the highest point of the sign.
29. Sign, Holiday Decoration – Temporary seasonal signs, in the nature of decorations, clearly incidental to and customarily associated with nationally recognized holidays and which contain no advertising message.

30. Sign, Home Occupation – A sign listing only the name or occupation of a permitted home occupation.
31. Sign, Indirect Illumination – Illumination of a sign that is effected by a source of light not contained within the sign itself.
32. Sign, Interior – Signs within a building not visible from outside. Interior signs are not regulated by this ordinance.
33. Sign, Marquee – A roof-like structure of a permanent nature that projects from the wall of a building or its supports and may overhang the public way.
34. Sign, Monument – A freestanding sign supported primarily by an internal structural framework or integrated into landscaping or other solid structural features other than support poles.
35. Sign, Multitenant – An identification sign for a commercial site with multiple tenants, displaying the names of each tenant on the site.
36. Sign, Nameplate - A sign typically used to identify the business or residents of the premises, not exceeding 2 by 12 inches (2" x 12").
37. Sign, Off-premise – A permanent or temporary sign not located on the premises of the business that it advertises.
38. Sign, On-premise – A permanent or temporary sign located on the premises of the business that it advertises, referring exclusively to the name, location, products, persons, accommodations, services, or activities of or on those premises, or the sale or lease of those premises.
39. Sign, Open/Closed – An exterior sign that indicates whether a business is open or closed.
40. Sign, Painted – A sign painted directly on the building façade.
41. Sign, Permanent – A sign permanently attached to a structure or affixed to the ground. Includes *Wall Signs, Free standing Signs, Projecting Signs, Painted Signs, and Barber poles*. Permanent signs are intended to advertise or call attention to any item, business, activity, or place; are visible from outside a building; and are intended to be in place for longer than thirty days.
42. Sign, Projecting – A mounted sign that projects from and is supported by a wall of a building.
43. Sign, Real Estate – A temporary sign that relates to the sale, lease, or rental of property or buildings, or to construction activities on a site.
44. Sign, Service – An interior sign whose purpose is not to advertise the business displaying the sign, but to inform or provide for the safety of the public. Signs such as credit card placards, and "No Smoking" signs are examples of service signs.
45. Sign, Shingle – A sign suspended from and located entirely under a covered porch, covered walkway, or an awning.
46. Sign, Statuary – Any sign which is a modeled or sculptured likeness of a living creature or inanimate object intended to be used as an advertising device.
47. Sign, Temporary – A sign not permanently attached to a structure or to the ground. Examples of temporary signs include garage sale signs, temporary sale signs, contractor signs, banner signs, A-frame signs, T-frame signs, candidate signs, and real estate signs. Temporary signs shall only be displayed for a limited period. The definition of *temporary sign* does not include flags.
48. Sign Walker – A person (or persons) waving "sales theme signs" with arrows at entrances to major highways or at corners of high traffic intersections directing customers to a sale. Also called sign twirlers, sign holders, human billboards, and sign events.

49. Sign, Wall - A sign attached flush to the exterior surface of a building, or permanently applied to the exterior of a window of a building. The sign must not project above the roof. Light sources aimed at the wall sign may project further out from the wall.

50. Sign, Window – A sign affixed to the interior or exterior of a window or placed immediately behind a window pane so as to attract the attention of persons outside the building.

[Ord. No. 457; Ord. No. 472; Ord. No. 478]

D. APPLICABILITY

The provisions of this section shall apply to all signs placed or maintained within the Town of Jerome, with the exception of the following:

1. Non-illuminated names of buildings, dates of erection, monument citations, commemorative tablets and the like when carved into stone, concrete, metal, or any other permanent type construction and made an integral part of a permitted structure or made flush to the ground.
2. Signs required by law or signs of a duly constituted governmental body, such as traffic signs, warning signs, or no trespassing signs.
3. Signs placed by a public utility for the safety, welfare, or convenience of the public, such as signs identifying high voltage, public telephone, or underground cables.
4. Notices regarding parking, directions, or trespassing on private property.
5. Signs upon a vehicle, provided that any such vehicle is actively used for bona fide delivery or other business purposes.
6. Bumper stickers on a vehicle.
7. Temporary signs for town-sponsored or co-sponsored events.

[Ord. No. 457; Ord. No. 478]

E. PERMITS

1. A sign permit shall be required before a permanent sign may be placed, constructed, reconstructed, or altered within the Town of Jerome, with the exception of the following:
   a. A-frame signs which are on private property (see additional standards regarding A-frame signs in paragraph G.9 of this Section).
   b. Changeable-Copy Signs.
   c. Directional Signs.
   d. Exterior temporary signs in the residential districts.
   e. Name-plate signs and business door identifiers not exceeding two by twelve inches (2” x 12”).
   f. Repainting or maintenance of signs, provided there is no change in size, shape, wording, composition, or color.
   g. Signs not permanently affixed to a window and located entirely within an enclosed building.
2. An application for a permanent sign permit shall be filed with the Zoning Administrator on a form prescribed by the zoning department and shall be accompanied by the required number of copies. Each copy shall be on one or more sheets of paper measuring no larger than 24 by 36 inches drawn to scale, which shall show the following:
   a. Signature of the applicant.
   b. The name and address of the sign owner and sign erector.
   c. Drawings showing the design, dimensions, color, material, and structure of the sign.

d. A drawing or photograph of the building facade indicating the proposed location of the sign, and all other existing signs maintained on the premises and regulated by this ordinance.

e. Proposed method of lighting the sign.

f. Any additional information that the Historic Preservation/Design Review Board may require in order to decide on the application, in accordance with Section 304.H.4 of the Zoning Ordinance.

g. Payment of a nonrefundable, one-time filing fee in an amount established by a schedule adopted by resolution of the Council and filed in the offices of the town clerk. Applicant may resubmit a modified plan without paying an additional fee. Payment of the filing fee shall be waived when the applicant is an agent of the town, county, state, or federal government.

3. Plan Review

   The Zoning Administrator shall review and accept completed plans in accordance with the provisions of Section 304. These plans shall be placed on the agenda of the next Historic Preservation/Design Review Board meeting.

4. Design Review

   The Historic Preservation/Design Review Board shall, in accordance with the provisions of Section 304, deny, approve, or conditionally approve any application for a sign permit. Upon approval of an application by the Historic Preservation/Design Review Board, the Zoning Administrator shall be instructed to issue the sign permit.

5. The Historic Preservation/Design Review Board may waive the requirements of this section in order to allow the preservation or restoration of signs or commercial graphics determined to be of historical significance.

[Ord. No. 457; Ord. No. 472; Ord. No. 478]

F. REGULATIONS APPLICABLE TO SIGNS IN ALL ZONES

1. The design, color, shape, materials, and style of permanent signs shall be subject to review and approval of the Historic Preservation/Design Review Board.

2. All signs shall be constructed, designed, or attached to structures in conformance with the building code adopted by the Town of Jerome.

3. No sign, mannequin, skeleton or statue shall be constructed or placed in the clear vision triangle, erected or lit in such a manner as to interfere in any way with the flow of traffic on the public right of way, or present a traffic hazard.

4. No sign or mannequin/skeleton/statue shall be constructed or placed in such a manner as to interfere with pedestrian traffic on public or private walkways, stairs, and/or handrails.

5. Freestanding signs shall not exceed four (4) feet in height.

6. Organizations as defined herein are allowed temporary signs without a permit or review for temporary special event banners or signs. Banners for special events must be removed within three (3) days of the close of any event and may not be hung on Town property without permission of the Town of Jerome. The town manager may approve special event banners to be hung on town property for recurring events. Banners to be hung on town property for first-time events shall be approved by the town council.

7. Lighting shall be directed at the sign from an external light source and shall be installed so as to avoid any glare or reflection into any adjacent property, or onto a street or alley so as to create a traffic hazard. These restrictions shall apply to internally lighted signs, which may be allowed if constructed of metal or wood. No internally lit signs that are constructed of acrylic or plastic are allowed. No sign that flashes or blinks shall be permitted outside. No visible bulbs, neon tubing, or luminous paints shall be permitted as part of any sign.

8. Any existing nonconforming, permanent sign legally constructed or permitted prior to the adoption of this ordinance may be continued in use; if such a sign is damaged, it may be restored or repaired. If a new sign is constructed, it must conform to the provisions of this Section 509 and Section 501.
9. Signs shall be removed within thirty (30) days of business relocation or closure.
10. If any sign becomes a danger to the public or becomes deteriorated or is abandoned, the property owner or owner of the sign shall be notified to remove or repair the sign. If they do not comply within ten (10) days, the zoning administrator shall have the sign removed and the cost assessed to the owner of the property on which such sign is located.
11. Painted Signs. Painted signs shall be subject to review by the Historic Preservation/Design Review Board in accordance with Section 304.H.4 of the Zoning Ordinance. The maximum number and area of painted signs shall be subject to the same restrictions and standards as other permanent signs.
12. Flags. Unless otherwise required by state law or specified in this article, no more than two (2) flags may be displayed on a flagpole, from a flag bracket, or on a flag stanchion. Examples of flags include, but are not limited to, the insignia of any nation, organization of nations, state, province, county, city; any religious, civic, or fraternal organization, or educational institution. The area of each flag shall not exceed sixteen (16) square feet, and the height of the flag shall be no taller than the building to which it is attached. For the purpose of determining the area of a flag, only one side of the flag shall be counted. Flags may be externally illuminated. A sign permit is not required for a flag.

[Ord. No. 457; Ord. No. 472; Ord. No. 478]

G. REGULATIONS APPLICABLE TO SIGNS IN RESIDENTIAL ZONES

1. One nameplate sign not exceeding 2 by 12 inches indicating the names of the occupants or business, and one set of numbers 4 by 12 inches indicating the street address shall be allowed for each dwelling unit without a permit.
2. One nonilluminated sign not exceeding eight (8) square feet in area shall be allowed on premises only to identify a home business and requires a permit and review by the Historic Preservation/Design Review Board. A two-sided sign is one sign.
3. No sign shall extend above the eaves line of a building or extend higher than ten (10) feet above the ground directly below it.
4. Temporary signs shall be permitted in the residential zones without a permit, subject to the following provisions:
    a. The sum area of all temporary signs does not exceed five (5) square feet in size.
    b. If the temporary sign pertained to an event (such as an open house or garage sale), the sign shall be removed within three (3) days of the completion of the event or activity that is being advertised.
    c. Signs shall maintain a minimum setback from the right of way of ten (10) feet, unless there is a primary structure on the lot located closer to the right of way than ten (10) feet, in which case the sign may be placed at the same setback as the primary structure.
    d. The maximum height of a temporary sign is four (4) feet.
    e. Signs shall not be illuminated.

[Ord. No. 457; Ord. No. 472; Ord. No. 478]

H. REGULATIONS APPLICABLE TO SIGNS IN COMMERCIAL AND INDUSTRIAL ZONES

1. No more than two (2) permanent signs are permitted for any one business except that a business having frontage on and physical access from two (2) or more streets will be allowed a total of three (3) signs.
2. The maximum area of all permanent signs shall not exceed 32 square feet.
3. The area of any single wall, projecting, freestanding or canopy sign shall not exceed 16 square feet.
4. No sign shall extend above the roof of the building to which it is attached.
5. The bottom of any projecting sign shall be no lower than 8 feet above the ground directly below it.
6. No part of any projecting or freestanding sign may project over any roadway.
7. One (1) set of address numbers not exceeding 4 4 by 12 inches in total area shall be allowed in addition to normal sign allowances.
8. Temporary signs, which are promotional in nature and intended to advertise a specific event, activity, or business, are allowed in addition to other signs. Examples of temporary signs include, but are not limited to banner signs. Temporary signs must meet all restrictions for signs in this section in addition to the following:
    a. The sum area of all temporary signs shall not exceed sixteen (16) square feet.
    b. A maximum of one (1) temporary sign may be placed on the property.
    c. No business may display a temporary sign for more than thirty (30) consecutive days twice per calendar year.
    d. If the temporary sign pertained to an event (such as an open house or garage sale), the sign shall be removed within three (3) days of the completion of the event or activity which is being advertised.
    e. Temporary signs shall maintain a minimum setback from the right of way of three (3) feet, unless there is a primary structure on the lot which is located closer to the right of way than three (3) feet, in which case the sign may be placed at the same setback as the primary structure.
    f. Temporary signs require administrative approval from the zoning administrator. Applications shall be submitted on a form prepared by the zoning administrator and shall demonstrate compliance with the standards of this section.
    g. Application for a temporary sign shall include payment of a nonrefundable, one-time filing fee in an amount established by a schedule adopted by resolution of the Council and filed in the offices of the town clerk. Payment of the filing fee shall be waived when the applicant is an agent of the town, county, state, or federal government.
    h. Temporary signs shall not be illuminated.
9. A-frame signs are allowed without a permit provided they meet the following requirements:
    a. They do not exceed four (4) square feet in size.
    b. They do not exceed four (4) feet in height.
    c. They are located entirely on private property owned by the business that they are advertising.
    d. They are not left outside during non-business hours.

10. Changeable-copy signs are allowed without a permit provided they do not exceed four (4) square feet in size and are attached to the façade of a building. A maximum of one sign per business is allowed.
11. Directional signs are permitted in addition to normal sign allowances. No more than two (2) directional signs are allowed with a maximum total area of eight8 square feet. Directional signs do not require a permit.
12. Service signs offering information on incidental services or recommendations, e.g., VISA, MasterCard, WiFi, etc., are permitted in addition to normal sign allowances provided:
    e. They conform to all provisions contained in this section.
    f. They are inside a window.
    g. There is no more than one (1) sign per incidental service per public entrance to the business.
    h. Each sign does not exceed 16 square inches in area.

[Ord. No. 457; Ord. No. 472; Ord. No. 478]

I. PROHIBITED SIGNS

1. Abandoned signs
2. Billboards
3. Digital or electronic signs with changeable copy
4. Flying banners
5. Flashing or blinking signs
6. Gas-generated signs
7. Inflatable and balloon signs
8. Mannequins/skeletons/statues displaying, wearing, or holding any advertising content such as flyers, business cards, or other promotional materials.
9. Moving and rotating signs – including rotating barber poles
10. Off-premise signs in the commercial or industrial zoning districts
11. Signs attached to or painted on trees, rocks or other natural features
12. Signs emitting any sound designed to attract attention
13. Signs in the clear vision triangle
14. Signs in the right-of-way
15. Signs blocking pedestrian pathways, stairs, or handrails
16. Signs painted on fences
17. Sign walkers
18. Signs with visible bulbs or luminous paints

[Ord. No. 472; Ord. No. 478]

SECTION 510. PARKING AND LOADING REQUIREMENTS

A. PURPOSE

The purpose of this section is to alleviate or prevent congestion of the public streets, and to promote the safety and welfare of the public by establishing minimum requirements for the off-street parking of motor vehicles in accordance with the use to which the property is put, It is the further purpose of this section to place upon the property owner the primary responsibility for relieving public streets of the burden of on-street parking.

B. APPLICATION

The provisions of this section are applicable to all zone districts of this Ordinance.

C. GENERAL REGULATIONS

1. A parking space shall mean an area of not less than one hundred sixty (160) square feet with a minimum width of eight (8) feet and a minimum depth of twenty (20) feet, which is specifically designated for and used for the parking of automobiles and light trucks.
2. An applicant for a new building permit must submit plans showing the off-street parking required by this subsection. These plans must show location, arrangement, and dimensions of the off-street parking, turning spaces, drives, aisles, and ingress and egress, and must be approved by the Zoning Administrator in accordance with the provisions of Section 303.
3. Whenever a permit has been issued in compliance with the requirements of this section, subsequent use of the structure, or use of land, is conditioned upon the unqualified availability of off-street parking as shown in the plans submitted in support of receiving the permit.
4. A base number of parking spaces shall be established for an existing building's designated use at the time of the passage of this Ordinance. A building's subsequent change of use that would normally decrease the number of off-street parking spaces shall not reduce the established base number of parking spaces. A change of use that would decrease the parking spaces would be able to change back to a higher use without penalty of losing spaces for five (5) years. Any subsequent change of use that requires an increase of off street parking spaces beyond the established base number of parking spaces shall be in accordance with the schedules set forth in Section 510.D.
5. It is unlawful to reduce the amount of existing parking below the minimum required by this section without first supplying other spaces as are required.
6. In the event of mixed uses, the total requirement for off-street parking spaces is the sum of the requirements of the various uses computed separately.
7. All off-street parking shall have access to/from a public street.
8. In calculating the total number of required off-street parking spaces, fractional amounts over fifty (50) percent shall be regarded as the next highest number.
9. A minimum of one (1) space is required for any use.

D. DESIGN AND LOCATION OF PARKING SPACES

1. Residential Uses:
    a. Required off-street parking shall be located on the same lot or parcel as the use it is intended to serve, unless parking on a property within 500 feet that shares the same zoning designation as the subject property is available to the property owner. Those spaces may count toward the required parking. As part of the application, the property owner shall provide satisfactory assurance that the separate lot or parcel is permanently committed to parking use by deed restriction or recorded easement.
    b. Off-street parking spaces, driveways, and access ways shall be properly graded to prevent impoundment of surface water.

2. Non-residential Uses:

   a. Required off-street parking shall be located within the C.1. Zone. Whenever the use of a separate lot or parcel is proposed for fulfillment of minimum parking requirements, the owner shall submit, as part of their application, satisfactory assurance that the separate lot or parcel is permanently committed to parking use by deed restriction or recorded easement.

   b. Off-street parking spaces, driveways, and access ways shall be fully improved with an all-weather, dust-free surface, and properly drained to prevent impoundment of surface water.

   c. Off-street parking spaces shall be situated in a manner which will not result in automobiles backing onto a public street.

   d. A variance from the requirement of Section D.2.c. may be granted by the Board of Adjustment if compliance with this section is geographically impossible. If such a variance is granted, it shall be required as a condition of the variance that traffic signs shall be placed by the Town, after approval by the Historic Preservation/Design Review Board, and paid for by the applicant, alerting crossing traffic of automobiles backing onto public streets in all areas except those abutting the State highway.

E. SCHEDULE OF REQUIRED OFF-STREET PARKING SPACES

1. Off-street parking spaces shall be provided for each specified use in accordance with the following schedule. “Usable area” as used herein shall mean the area capable of being devoted to the specified use (does not include such spaces as kitchens, restrooms, hallways, etc.). If the use of any structure is changed, off-street parking shall be required and provided under the new use.

	USE	SPACE REQUIRED
a.	Bowling alley	4 spaces per alley or lane
b.	Church or other place of worship	1 space per 6 seats (each 30 inches of bench space is considered 1 seat), plus 1 space per 50 sq. ft. of usable area not used for seating
c.	Day care center	2 spaces plus 1 space per 500 sq. ft. of usable floor area
d.	Home occupation	No additional space
e.	Hospital or nursing home	1 space per 2 beds
f.	Hotel	1 space per rental unit
g.	Manufacturing, industry	1 space per 500 sq. ft. of wholesaling usable area
h.	Medical, dental office, or clinic	3 spaces per doctor
i.	Offices	1 space per 300 sq. ft. of usable area
j.	Public assembly place such as auditorium meeting hall or theater	1 space per 6 seats (each 30 inches of bench space is considered 1 seat), plus. 1 space per 100 sq. ft. of usable area
k.	Residential (except apartment)	2 spaces per dwelling unit
l.	Residential (apartment)	1 ½ spaces per dwelling unit
m.	Restaurant or bar	1 space per 6 seats (each 30 inches of bench space is considered 1 seat) plus 1 space per 100 sq. ft. of usable area
n.	Retail and service uses	1 space per 300 sq. ft. of usable area
o.	School (elementary and middle)	1 space per employee
p.	School (other than elementary and middle)	1 space per 10 seats in main auditorium or 3 spaces per classroom whichever is greater
q.	Service station	2 spaces, plus 1 space per service bay
r.	Warehouse	1 space per 2,000 sq. ft. of usable area
s.	Studio	1 space per 500 sq. ft. of usable area

t.	Spirituous Liquor Tasting Facility	1 space per 300 sq. ft. of usable area

2. Requirements for a specific use not listed in this section shall be determined by the Planning and Zoning Commission based on the requirements of the most similar use listed.

[Ord. No. 324; Ord. No. 408; Ord. No. 465]

F. ALTERNATIVE OFF-STREET PARKING STANDARDS

1. Because of the unique topography and history of development in the Town of Jerome, the ability to meet off-street parking standards can often be challenging. Providing greater flexibility to meet off-street parking requirements through shared parking agreements, existing public parking and shuttle services, and a parking justification analysis that establishes the minimum parking need for a use will create more opportunities for the preservation, rehabilitation, restoration, and reconstruction of properties throughout the Town of Jerome. The following standards are provided as an alternative and may be used in lieu of the standards in Section 510.D.
2. Neighborhood Meeting Required Near Existing Residential Development
    a. Applicants within 300 feet of an existing residence who opt-in to these alternative parking standards shall hold a neighborhood meeting prior to submittal of the application in accordance with Section 306 of this Ordinance.
3. Parking Requirements
    a. At least two off-street spaces shall be provided for residential uses except apartments.
    b. For all other uses, a parking justification analysis shall be provided.
        1) The Parking Justification Analysis shall include the following minimum contents:
            i. An analysis of the parking demand for existing and proposed onsite buildings and uses, including hours of operation and peak use time and demand for each proposed building or use.
            ii. The number and location of proposed onsite parking spaces, including ADA-accessible spaces.
            iii. The data source used to establish the number of proposed onsite parking spaces.
            iv. The existing and future anticipated available parking within and in the vicinity of the proposed development.
            v. If parking demand is proposed to be addressed offsite, reference to or copies of any shared parking agreement or other evidence of a right to park in that location.
            vi. Off-street loading requirements and impacts on surrounding uses and properties.
            vii. A summary of the neighborhood meeting, including topics discussed, concerns raised by neighboring property owners, and the applicant's response.
            viii. Any other information deemed appropriate by the Town Engineer, including, without limitation, a traffic study.
        2) Parking Justification Analysis Procedure
            i. The parking justification analysis shall be submitted to the Zoning Administrator in conjunction with a site plan. The Zoning Administrator shall circulate the parking justification analysis to the Town Engineer for comment. The Zoning Administrator and/or Town Engineer shall review the application and provide comments on specific deficiencies of the application. An applicant may revise the parking justification analysis until it is deemed satisfactory by the Zoning Administrator and Town Engineer.

ii. Within fourteen (14) days of receipt of a parking justification application, the Zoning Administrator shall determine the completeness of the application. If the application is incomplete, the Zoning Administrator shall provide the applicant with a comprehensive list of the specific deficiencies in a written notice. A resubmittal of an incomplete application shall be reviewed for completeness within seven (7) days. If the application is deemed to be complete, the Zoning Administrator shall forward the parking justification analysis to the Planning and Zoning Commission, which shall hear the application for parking justification.

iii. The Zoning Administrator shall then choose a reasonable time for the hearing, and shall give notice to interested parties and to the public by publication of a notice in a newspaper of general circulation in the area, and by posting one notice of the hearing on the property requesting the parking modification, not less than fifteen (15) days prior to the hearing. The notice shall set forth the time and place of the hearing, including a general explanation of the matter to be considered.

iv. The Commission shall act by recommending approval, denial, or continuing the application and hearing to a time and place certain.

v. The Council shall, within forty-five (45) days after the Commission action on a parking justification application, act on the recommendation of the Planning and Zoning Commission by either affirming, denying, or modifying the recommendation of the Planning and Zoning Commission. The Town Council may make a decision based on its own findings.

vi. The Council may designate such conditions in connection with the proposed alternative parking request as it deems necessary to secure the intent and purpose of this Ordinance and may require such guarantees and evidence that such conditions are being, or will be, complied with.

vii. The Council's decision shall be final and shall become effective immediately. Notice of the decision shall be mailed to the applicant at the address shown in the application.

viii. Failure of the applicant to comply with the conditions and safeguards that are a part of the terms under which an alternative parking request is granted shall be deemed a violation of this Ordinance and punishable under Section 110.

3) Standards for Parking Justification Analysis Consideration

i. The application for a parking justification analysis may be denied if it fails to address any adverse impacts on surrounding properties or the public.

ii. Parking demand may be based on standard modeling practices and may consider, as applicable, hours of operation, peak use periods, occupancy or capacity, employee and visitor demand, shared parking opportunities, availability of public parking and the Town shuttle, walkability, seasonality and tourism patterns, and other relevant site-specific or market-based factors.

SECTION 511. HISTORIC OVERLAY DISTRICT

[CODIFIER'S NOTE: This subsection was rewritten with Ordinance 497 and moved to new Section 409.]

SECTION 512. LANDSCAPE REQUIREMENTS

Exceptions to the standards of this section may be granted by the Town Council when it is determined that landscaping may interfere with defensible space techniques for wildfires or that the circumstances of a property make it infeasible to comply without significant expense to the property owner. Any individual may apply for a waiver to the standards of this section. Any appeals of decisions made by the Mayor and Council or Zoning Administrator to the standards of this section shall be heard by the Board of Adjustment.

A. NATIVE PLANT & CULTURAL LANDSCAPE INVENTORY PLANS

This section is intended to protect and celebrate the unique local environment within the Town of Jerome and the greater Verde Valley.

1. Purpose:

   Preserve the Town of Jerome's sense of place by ensuring development reflects the character of the local environment, promotes water conservation through the use and retention of native plant species adapted to local conditions, protects vegetation that provides habitat for native wildlife, and conserves designed landscapes, historically significant plants, and spatial relationships that contribute to the Town's cultural and historic character.

   Development shall incorporate into Landscape Plans protected native plant species and cultural landscape features existing on a project site prior to construction, in quantities not less than those identified within the limits of disturbance. A qualified Plant Professional (defined below in *Section 512.A.6: Professional Expertise*) shall inventory all protected plants, including individual specimens and contributing landscape features such as gardens and plazas, and shall determine and document the minimum number of protected plants to be included in the Landscape Plans. Plant salvage is encouraged but not required; salvaged material and/or nursery stock may be used to meet these requirements. Cultural and designed landscapes that meet the eligibility requirements of the National Register of Historic Places but are not listed shall be included in the inventory.

2. Applicability:

   a. All new development requiring a Site Plan or Preliminary Plat review.

3. Exceptions:

   a. The site is for one single-family dwelling unit or a single duplex, triplex, or quadplex.

   b. The site does not contain any:

      1) Plants listed as Endangered or Threatened under the Federal Endangered Species Act (ESA);

      2) Plants listed on the Protected Native Plant List curated and maintained by the Town of Jerome;

      3) Features or plants that contribute to the cultural landscape of the Town of Jerome; or

      4) Other protected plants or features listed in *Section 512.A.8: Protected Plants and Landscapes*.

   c. Existing constructed landscape does not require inventory unless it has been deemed historic and is listed on a local, State, or Federal registry.

   d. Sites that have been completely disturbed, or the proposed development area of a site has been completely disturbed, and no cultural landscapes exist.

   e. If a Native Plant Exception is approved by the Town Council.

1) The Town Council may approve an exception to the requirements of this section upon recommendation of the Planning and Zoning Commission if the applicant demonstrates that:

i. Strict compliance with this Section is impractical due to site conditions, prior disturbance, public safety concerns, or the limited presence and/or poor condition of protected plants or cultural landscape features on the site;

ii. The requested exception is the minimum necessary to address the circumstances supporting the request; and

iii. The exception will not result in the unnecessary removal of protected plants, cultural landscape features, or historic resources.

iv. If the requested relief may be granted through the variance process established by this Ordinance, the applicant shall pursue a variance. A Native Plant Exception shall not be scheduled for consideration by the Planning and Zoning Commission or Town Council unless the Zoning Administrator determines that the requested relief is not eligible for a variance.

v. A Native Plant Exception shall be processed in accordance with the procedures outlined in Section 303.1.

4. Submittal Requirements:

a. A Native Plant & Cultural Landscape Inventory Plan is required in conjunction with a project's Landscape Plans and must be approved through the Site Plan or Preliminary Plat review process.

b. The Native Plant & Cultural Landscape Inventory Plan shall be in 24x36-inch format unless information can be shown clearly on a smaller sheet size.

c. The Native Plant & Cultural Landscape Inventory Plan shall feature the content requirements as provided by the Zoning Administrator in the Landscape Guide for the Town of Jerome.

5. Plan Approval Prior to Site Modifications:

a. No grubbing, grading, construction, or plant salvage may take place on the project site until approval of the required Native Plant & Cultural Landscape Inventory Plan. No grading permits shall be issued prior to submittal and approval of the Native Plant & Cultural Landscape Inventory Plan.

6. Professional Expertise

a. Native plant inventory must be performed by a Plant Professional who can identify plant species in the field. Unless otherwise directed or approved by the Zoning Administrator, plant professionals include:

1) Arborist (certified by the International Society of Arboriculture)

2) Landscape Architect

3) Horticulturist, Biologist, or Botanist with a minimum B.A. or B.S. in an appropriate environmental resource field

7. Plant Inventory Standards

a. Plant Professional shall conduct a plant survey and tag all protected species within the project's grading limits.

b. All protected plants shall be tagged with an embossed metal tag, or other approved equivalent, bearing an inventory number that corresponds to the inventory table.

8. Protected Plants and Landscapes

    a. Edible/ornamental trees and plants at the discretion of the Zoning Administrator

    b. Individual plants within Cultural Landscapes that have been deemed historic and are listed on a local, State, or Federal registry.

    c. Endangered or Threatened plants listed under the Federal Endangered Species Act.

    d. Other plants as listed on the Town of Jerome's Protected Native Plant List.

B. LANDSCAPE PACKAGES

This section is intended to establish minimum standards for the installation and maintenance of plant material appropriate for the region, including irrigation for constructed landscapes.

1. Purpose:

    Reinforce the Town of Jerome's sense of place by ensuring constructed landscapes reflect the character of the local environment and respond to the semi-arid high desert climate, while establishing minimum standards for plant materials and irrigation.

    Constructed landscapes shall incorporate native, near-native, and drought-tolerant plant species to reduce water demand and reflect the surrounding environment. Design shall minimize heat gain through canopy trees, reduce erosion and runoff, and control dust from site disturbance.

    Landscape Packages shall incorporate passive rainwater harvesting and efficient irrigation, including smart technologies, to reduce potable water use. A Registered Landscape Architect, or similar design professional, shall prepare a Landscape Package demonstrating compliance with this section, including a Planting Plan, Irrigation Plan, Rainwater Harvesting Plan, and associated construction details.

2. Applicability:

    a. All new development that is proposed to disturb existing vegetation on a property.

    b. Expansion of existing development that removes existing vegetation on a site

        1) If the expansion removes less than 50% of the existing vegetation on a site, then the standards of this section only apply to the proposed expansion area.

        2) If the expansion area removes more than 50% of the existing vegetation on a site, then the standards of this section apply to the entire site.

3. Exceptions:

    a. Single-Family dwelling units or a single duplex, triplex, or quadplex.

    b. An applicant may apply for a Landscape Exception to waive the standards of this section. The Landscape Exception shall be approved by the Town Council. To approve a Landscape Exception, the Town Council shall determine that the required landscape standard would provide limited community benefit, create security or public safety concerns, adversely affect the historic character of a building or place, or that existing site features provide an equivalent level of buffering or screening. A Landscape Exception shall follow the process outlined in Section 303.1. If the requested relief may be granted through the variance process established by this Ordinance, the applicant shall pursue a variance. A Landscape Exception shall not be scheduled for consideration by the Planning and Zoning Commission or Town Council unless the Zoning Administrator determines that the requested relief is not eligible for a variance.

4. Submittal Requirements

    a. A Landscape Package must be submitted for approval with the Site Plan or Preliminary Plat at the time of the Site Plan or Preliminary Plat review process.

b. The Landscape Package shall be in 24x36-inch format unless information can be shown clearly on a smaller sheet size.

c. The Landscape Package shall feature the content requirements as provided by the Zoning Administrator in the Landscape Guide for the Town of Jerome and within Section 512 of this Ordinance.

5. Plan Approval Prior to Site Modifications:

a. No grubbing, grading, construction, or plant salvage may take place on the project site until approval of the required Landscape Package. No grading permits shall be issued prior to submittal and approval of the Landscape Package.

6. Professional Expertise

a. Landscape Packages must be prepared and sealed by a Landscape Architect, registered in the State of Arizona, or other design professional, such as an architect or engineer.

7. Planting Standards

a. Plant Material: All plant material used for landscaping must be selected from the Arizona Department of Water Resources (ADWR) Verde Valley Low Water Use Drought Tolerant Plant List or other plants as determined by the Town Council through a landscape exception.

1) Exceptions

i. Oasis Areas and/or Natural Turf Area may be approved by the Town Council as a landscape exception.

1. Oasis areas may feature plants not listed in the Arizona Department of Water Resources Low Water Use and Drought Tolerant Plant List.

2. Oasis areas must be limited in scope and shall only include areas with outdoor seating/furnishings for gathering/assembly. Oasis areas shall not exceed 10% of the total project area.

3. Oasis areas include: planting areas (beds or planters) for annual flowers, protected courtyards, vegetable gardens, etc.

4. Natural Turf areas may feature grasses not listed in the ADWR Verde Valley Low Water Use and Drought Tolerant Plant List. Common Bermuda Grass is prohibited. Hybrid Bermuda Grass (sterile hybrid varieties) is permitted.

5. Natural Turf Area shall be limited to accessible park space for residential projects only. Natural turf shall not be planted for aesthetic purposes. Natural turf area may exceed 3% of the total project area when used for active recreation.

ii. The Town Council may approve plants not on the Verde Valley Low Water Use Drought Tolerant Plant List if it is determined that the use of an unlisted plant preserves or furthers the historic character of the Town of Jerome.

b. Perimeter Landscape Borders: Perimeter Landscape Borders are intended to create a natural transition between dissimilar land use intensities to enhance the overall aesthetic of the community and promote compatibility between uses.

1) Perimeter Landscape Border shall feature:

i. A minimum width or quantity as determined by the Zoning Administrator;

ii. One tree every 33 linear feet (minimum) unless site constraints prohibit the placement of trees;

iii. Understory plants;

iv. Screen (e.g., decorative masonry wall, opaque ornamental fence, or vegetative hedge) at the back of the border.

2) Perimeter Landscape Border shall be located entirely on project property, unless use of right-of-way for landscape improvement is approved by the Town Engineer (or ADOT as necessary).

3) Exceptions:

i. No perimeter landscape border shall be required along boundaries where zero lot line development is proposed.

ii. No perimeter landscape border shall be required along boundaries where the proposed project use intensity matches the existing adjacent use intensity.

iii. No perimeter landscape border shall be required along boundaries where the project has preserved natural open space (10' width minimum).

iv. A Landscape Exception approved by the Town Council.

c. Parking Lot Landscape: Parking lots shall feature canopy trees to shade hardscape surfaces and parked vehicles. Generally, canopy trees should be planted along the edges of a parking lot, but site constraints may make this unfeasible. The Zoning Administrator shall have the authority to designate the location and quantity of parking lot trees.

d. Amenity Landscape: Amenity Landscape includes building foundation plantings, building entry plantings, plazas, courtyards, streetscapes, parks, and recreational open space, in addition to general landscaped common area.

1) Amenity Landscape shall feature:

i. Residential Projects: Minimum of one tree and three understory plants (i.e., shrubs, cacti, succulents, ornamental grasses, vegetative groundcovers) per residential unit or residential lot. Trees may be placed within front yards, within parks, along streetscapes, or within general common area. The Zoning Administrator may waive any portion of this standard for existing residential development being renovated, rehabilitated, or reconstructed.

1. Multifamily – New Construction: Trees shall be placed around buildings, along walkways, within plazas/courtyards, or within recreational areas.

2. Multifamily – Existing/Expansions: Per the direction of the Zoning Administrator and to the greatest extent possible, trees should be placed around buildings, along walkways, within plazas/courtyards, or within recreational areas.

ii. Streetscapes: The design of streetscapes has been influenced by the topography of the area and helps contribute to the unique character that defines the Town of Jerome. The following streetscape standards are meant to apply only to new streets and extensions of existing streets into previously undeveloped areas.

1. Proposed streetscapes shall feature a minimum of one tree and five understory plants (i.e., shrubs, cacti, succulents, ornamental grasses, vegetative groundcovers) for every 50 linear feet, on both sides of the road within 20' of the edge of pavement.

a. Exceptions:

i. Local residential roads that provide access to the front of residential lots. Front yard landscape may count toward streetscape requirements when trees and understory are located within 20' of the edge of pavement.

ii. Roadways adjacent to natural open space (set aside in perpetuity), or agricultural uses.

iii. A Landscape Exception approved by the Town Council.

iii. Minimum Parks and Recreational Open Space (e.g., ball fields, sports courts, playgrounds, dog parks, fitness spaces, trails, pools, picnic spaces, etc.) Requirements

1. Residential Subdivision: 200 SF per lot, if subdivision is more than four (4) lots.

2.Multifamily: 200 SF per unit, if multifamily development is more than 25 units. Indoor recreation or fitness centers may count toward the total Parks and Recreational Open Space.

3. Parks and Recreational Open Space shall be designed in a contiguous manner to the extent feasible, in order to provide a maximum recreational value (e.g., a single large park is preferable to four small parks within a large subdivision).

4. An in-lieu fee may be paid to reduce the required Parks and Recreational Open Space square footage by 50% with the approval of the Zoning Administrator. Standard in-lieu fee = $1,500 per unit or lot.

e. Plant Sizes at Installation:

1) Trees: 15 Gallon minimum

2) Shrubs/Cacti: 5 Gallon minimum

3) Ornamental Grasses: 1 Gallon minimum

4) Vegetative Groundcovers: 1 Gallon minimum

5) Site Salvaged Plant Material: any size

f. Revegetation Standards

1) All areas of a project site that are disturbed during the construction process but not improved with structures, parking areas, or landscape shall be revegetated with native plants or native seed mixes.

i. Native Plant species shall be selected by the Landscape Architect and identified in the planting plans, along with Pure Live Seed (PLS) seeding rate lb. per acre.

ii. Native Seed Mixes shall be applied as a hydroseed slurry with tackifier, fertilizer, and mulch as necessary (according to soil conditions) to ensure plant establishment.

iii. Revegetation shall be designed and installed to achieve successful establishment consistent with site soils, slope, and climatic conditions.

2) Exceptions:

i. Revegetation shall not be required when the lack of vegetation is a defining element contributing to the character of a historic cultural landscape.

g. Irrigation Standards

1) All landscaped common area (unless noted as xeric – without the need for irrigation) shall feature a water-conserving irrigation system for all new plantings.

2) System Specifications

i. Meter: Water meter shall be a dedicated irrigation meter.

ii. Reduced Pressure Backflow Preventer (RPBP): A reduced-pressure backflow preventer shall be installed to prevent contaminated water from mixing with clean municipal water supplies.

iii. All landscape areas shall feature permanent point-source drip irrigation systems. Drip systems shall irrigate with low-flow emitters. Spray irrigation systems may only be used for turf applications unless otherwise approved by the Zoning Administrator. Temporary spray systems may be used to establish hydroseeded areas.

iv. Permanent irrigation systems shall be fitted with irrigation controllers/timers (hardwired, battery-operated, or solar) to operate zone valves that respond to plant water needs throughout each season of the year.

v. Irrigation controllers shall accommodate contemporary smart technologies. All systems shall include a minimum of: one (1) flow sensor and one (1) weather-based sensor/application (i.e., rain sensors, tensionmeters, soil moisture gauges, weather stations, automatic seasonal adjustment applications, internet-connected weather data applications, etc.).

vi. Pipes carrying water under constant pressure must be buried to a depth of 24 inches. Those that are under intermittent pressure must be buried to a minimum depth of 18 inches, as necessary to prevent freezing.

vii. All non-pressure irrigation piping shall be buried a minimum of 12 inches, with greater depth required where necessary to prevent freezing or damage.

viii. Pipes under paved surfaces must be contained within pipe sleeves.

ix. All irrigation equipment shall be protected (boxes, cages, cabinets, etc.) to ensure that irrigation equipment is not exposed to adverse weather conditions (freezing, solar degradation, etc.) or vandalism.

3) System Design

i. Irrigation zones shall consider plant irrigation needs throughout seasons, plant establishment periods, and maturity.

1. It is recommended that trees and understory be kept on separate irrigation zones.

2. It is recommended that amenity area landscape and landscape borders be kept on separate irrigation zones.

ii. Irrigation zones that feature native plants (or drought-tolerant plants with similar irrigation demands) may be turned off after plant establishment periods, as long as plant growth and health do not decline.

4) Maintenance

i. Irrigation systems must be maintained and replaced as necessary to continue to conserve water. Detection and repair of leaky or broken pipes, valves, and fittings, as well as malfunctioning and/or misaligned heads and emitters must be a part of a regular maintenance program for the site.

h. Rainwater Harvesting Standards

1) All landscaped areas shall be depressed between 4” and 9” to collect rainwater.

i. Exceptions

1. Areas identified by the project engineer or Town Engineer that cannot accommodate rainwater harvesting (for purposes of safety or functionality),

2. Areas with a cross slope greater than 4%,

3. Within 10’ of a building foundation,

4. Within 10’ of a utility,

5. Within a utility or access easement.

6. Landscape areas that feature plants with limited water tolerance (e.g., Opuntia spp., Cylindropuntia spp., Yucca baccata, Agave parryi) shall be designed to minimize supplemental irrigation. Basins may be terraced to accommodate plants with varying water needs. Plants with high water needs shall be located at basin bottoms. Plants with moderate water needs shall be located at basin terraces/side slopes. Plants with limited water needs shall be located at the top of basins.

2) Rainwater Basin Design

i. Basin slopes shall not exceed 3:1.

ii. Basin depths shall not exceed 9".

iii. Basin floor soils shall be loosened to a depth of at least 12".

iv. Basin sides and bottoms shall be covered in 1"+ screened rock or bark mulch (no "minus" material is permitted) to a depth of 2". Alternatively, basins may be seeded with native seed mix.

v. Scuppers, curb cuts, and rooftop downspouts shall correspond to the location of rainwater harvesting basins

vi. Basins shall receive water from adjacent hardscape surfaces to the greatest extent feasible. Some basins, however, may only collect rainwater where it falls.

vii. Berms, gabions, check dams, weirs, and other drainage structures are all recommended to direct, disperse, and slow the movement of rainwater in landscape areas. Rainwater harvesting structures shall be depicted in both the Landscape Plans and Drainage Plans.

viii. Maximum reveal at the edge of public sidewalks and pedestrian circulation paths should be two inches or less to minimize the risk of injury to pedestrians. A minimum 12" wide shoulder with a maximum 2% cross slope away from public sidewalks or pedestrian paths is required.

ARTICLE VI: EMERGENCY CLAUSE

WHEREAS, the immediate operation of the provisions of this Ordinance is necessary for the preservation of the public health, safety and welfare, and to carry out the expressed intent and purposes of said Ordinance, an EMERGENCY is hereby declared to exist, and this Ordinance shall be in full force and effect from and after the date of its passage by the Council.

PASSED AND ADOPTED by the Council of the Town of Jerome this ____ day of _____, 19__.

ARTICLE VII: SUBDIVISION REGULATIONS

SECTION 701. TITLE, PURPOSE, AND ADMINISTRATION

A. PREAMBLE

The purpose of these regulations is to provide for the health, safety, general welfare, and harmonious development of the Town of Jerome and environs, in accordance with the principles, goals, and objectives of the adopted General Plan and to ensure that: all new development will strengthen the Town's economic base and valuation, future development will preserve and enhance the Town's natural scenic attributes, and all new development will maintain and encourage a pleasing environment and be in harmony with the special character and historical quality of Jerome. The purpose of these regulations is also to secure adequate provisions for streets and traffic circulation, water supply and distribution, sanitary sewerage, drainage and flood control, and in the development of lots and properties having optimum utility and livability. These regulations shall also facilitate the provision of lands for recreation and other public uses; promote the conveyance of land by accurate legal description; and establish procedures that will provide a basis of mutual understanding and equitable relationships between public and private interests.

B. AUTHORITY

The Jerome Subdivision Regulations are authorized by Title Nine, Chapter 4, Article 6, section 9-471 to 9-479 and Chapter 6, Article 1, Section 9-601 of the Arizona Revised Statutes, as amended, and are hereby declared to be in accordance with all provisions of these Statutes.

C. APPLICATION OF REGULATION

1. Final Plat Approval: No final plat shall be recorded or offered for record, nor shall any land be offered for sale with reference to such plat, until said plat has been recommended for approval to the Town Council by the Planning and Zoning Commission and approved by the Town Council. The Planning and Zoning Commission shall ascertain, before recommending to the Council, that said plat has satisfied all requirements of these regulations.

2. Plans, Plats and Replats: All plans of streets, highways, alleys, or other portions of the same intended to be dedicated to a public use or to the use of purchasers or owners of lots fronting thereon or adjacent thereto, and all plans, plats, and replats of land laid out in a subdivision or building lots, shall be submitted to the Planning and Zoning Commission for approval. The Planning and Zoning Commission shall ascertain, before approving it, that said plan, plat, plot, or replat has satisfied all of the requirements of these regulations.

D. JURISDICTION

These regulations shall govern the subdivision of all land that lies within the corporate limits of the Town of Jerome.

E. ADMINISTRATION

The Jerome Planning and Zoning Commission is hereby authorized to receive, process, and otherwise act upon preliminary and final subdivision plats in accordance with these regulations. The Town Zoning Administrator, the Town Engineer, and the County Health Department are hereby designated as Planning and Zoning Advisories to the Commission and the Town Council and charged with the duty of investigating and reporting upon matters referred to them in accordance with these regulations.

No Final plat of a subdivision shall be approved by the Planning and Zoning Commission and accepted by the Town Council unless it conforms to the provisions of these regulations and to the provisions of the Zoning Ordinance for Jerome, Arizona.

F. FILING FEE SCHEDULE

The submission of a tentative or final plat, abandonment, amended plat, recording fee deed restrictions, exceptions, improvement drawing, etc., shall include payment submitted to the Town

Zoning Administrator of a filing fee for the County Recorder. Fees shall be set by Resolution of the Town Council.

[Ord. 473, 8/10/2021]

NOTICE: The Final plat fees shall not be applied to subdivisions outside the Town of Jerome corporate limits.

The Town of Jerome may negotiate with the subdivider to acquire land for present or future municipal purposes in accordance with the laws of the State of Arizona.

SECTION 702. GENERAL REQUIREMENTS AND PROCEDURES FOR SUBMISSION OF PLATS

A. APPROVAL OF SUBDIVISION REQUIRED

1. No person proposing a subdivision or owning unapproved lots or parcels within Jerome shall subdivide or file a record of survey, map or plat for record, or sell any part of said subdivision, or unapproved lots or parcels, or proceed with any grading, construction, or other work on said lot until a preliminary and final plat of a subdivision have been approved in accordance with this Section.
2. Duties of Subdivider: While a subdivision is in the preliminary planning stage, the subdivider shall consult the Zoning Administrator to determine conformity with the General Plan, and compliance with the provisions of *Article VII Subdivision Regulations*, any other applicable sections of the Zoning Ordinance of the Town of Jerome, and requirements for the design and installation of public improvements as required by the Town of Jerome.
3. The following factors should be considered in the preliminary stage of planning a subdivision:
    a. Need for additional residential sites in the area.
    b. Type and quality of homes to be built.
    c. Lot sizes most adaptable to the use proposed.
    d. Areas to be reserved for business or industrial use.
    e. Special scenic locations or areas of historical importance which need to be reserved.
    f. School and/or park sites that will be required.
    g. Access features which may be desirable along arterial and collector streets.
    h. Areas subject to flooding.
    i. Suitability of land for urban development.
    j. Water, sanitary sewer, solid waste disposal, storm sewer, electric, and gas utility services to be provided.
    k. Fire and police protection
    l. Integration of the subdivision with existing and proposed development.
    m. Whether the site is appropriate for the proposed use.
    n. Legal or tax problems likely to be encountered.
4. Preliminary Plat and Engineering Drawings. The subdivider shall prepare a preliminary plat of the proposed subdivision and other exhibits as specified in Section 703.B.
5. Final Plat and Recording. The subdivider shall prepare a final plat as specified in Section 703.D, which shall conform substantially to the preliminary plat as approved, and if desired by the subdivider, it may constitute only that portion of the approved preliminary plat which is proposed to be recorded and developed at the time, provided, however, that such portions conform to all requirements of these regulations. The approved and executed copy will be recorded in the Yavapai County Recorder's office after full compliance with the regulations, and one copy will be filed in the Planning and Zoning Commission's office, and one with the Town Engineer.
6. Building Permits and Certificates of Occupancy:
    a. Building Permits. No Building shall be erected, or shall a building permit be issued for a building, unless the street giving access to the lot upon which such a building is proposed to be placed shall have been properly improved as required in Section 710.A.3.

b. Certificates of Occupancy. No certificate of occupancy shall be issued for any building unless all requirements of these regulations and any and all requirements of any other regulatory code, ordinance, or regulation have been met.

B. SKETCH PLAN AND MASTER PLAN REQUIREMENTS

1. It is strongly recommended that the subdivider review the initial proposal for the subdivision with the Zoning Administrator prior to preparing the required tentative plat, while plans for the proposed subdivision are still in preliminary form and other elements of the proposed development remain flexible. The purpose at this stage is to make available general advice on the purpose and effect of these regulations, the General Plan, zoning, and other Town planning, engineering, drainage, sewage, water systems, and similar standards, requirements, and plans. All applications requiring a pre-application meeting per Section 307 of this Ordinance shall provide a sketch plan with the form requesting a pre-application meeting. The sketch plan shall include:
   a. Property dimensions on all sides of proposed or existing lots
   b. North arrow and scale
   c. Proposed driveways and easements
   d. Adjacent street names
   e. Proposed disturbance area and grading limits
   f. Location and setbacks of all existing/proposed structures
   g. Square footage of existing/proposed structures
   h. Building height of existing/proposed structures
   i. Location of existing/proposed septic
   j. Adjacent properties zoning/use
2. The Zoning Administrator may require that the developer prepare and submit a Master Development Plan (MDP) where:
   a. The tract is sufficiently large to comprise an entire neighborhood;
   b. The tract proposed for platting is only a portion of a larger land holding of the developer;
   c. The tract is a part of a larger land area of which the development is complicated by unusual topography and land use.
3. The MDP shall be prepared to scale and accuracy commensurate with its purpose, and, in addition to the required elements of the sketch plan, shall include:
   a. General Street pattern of major arterial and collector streets.
   b. Indication of single-family and multi-family residential areas and indication of general lot size and number of lots per acre anticipated.
   c. General location and size of school sites, parks, or other public areas.
   d. Location of shopping centers and other non-residential proposed land uses, and indicating their proposed use.
   e. Methods proposed for sewage disposal, water supply, and storm drainage.
   f. An indication of the areas to be developed in accordance with a planned development schedule.
4. Approval: Upon acceptance of the general design approach by the Zoning Administrator, the MDP shall be submitted to the Planning and Zoning Commission for its consideration. If general

approval and notice to proceed with the platting process is given, notice to that effect shall be recorded in the minutes of the Planning and Zoning Commission meeting and a copy of said minutes transmitted to the subdivider and their engineer. If a development is to take place in several parts, the MDP should be submitted as supporting data for each part.

SECTION 703. SPECIFICATIONS FOR PLANS AND PLATS

A. PRELIMINARY PLAT AND ENGINEERING DRAWINGS:

1. Preliminary Plat to be Submitted: After the pre-application conference and general approval of the Sketch Plan and/or Master Development Plan, if required, the subdivider shall prepare a preliminary plat of the proposed subdivision and other exhibits as specified by this Ordinance. Copies of the preliminary plat and all required supplementary material, the number to be determined by the Zoning Administrator, shall be submitted to the Zoning Administrator, who shall determine the completeness of the application within fourteen (14) days of submission. An application that is deemed complete shall be circulated for departmental review. If the application is incomplete, the Zoning Administrator shall provide the applicant with written notice of the specific deficiencies in the application.
2. Departmental Review of Preliminary Plat: The Zoning Administrator shall refer copies of the preliminary plat to the following reviewing offices, who shall make known their recommendations in writing addressed to the Zoning Administrator.
    a. Town Engineer,
    b. County Highway Department (when plat abuts a county highway)
    c. County Health Department,
    d. Arizona Department of Transportation (ADOT) (when plat abuts a state highway)
    e. Fire Chief, and
    f. All interested utilities and agencies.

    These entities shall review the plat for matters within their jurisdiction and promptly report their recommendations to the Zoning Administrator, who shall check the plat for conformity to these regulations, add their own written comments and recommendations, and provide these comments to the applicant to be addressed in a resubmittal of the application until the Zoning Administrator determines that the substantive review of the application is complete.

    The subdivider's engineer may act as agent.
3. Planning and Zoning Commission Findings: After substantive review of the preliminary plat application has been completed, and the Zoning Administrator has forwarded the application to the Planning and Zoning Commission, the Commission shall hold a public hearing and express its approval, any conditions of approval, or its disapproval, and its reasons therefor.
4. The action of the Planning and Zoning Commission, including any conditions, shall be noted on two (2) copies of the preliminary plat. One (1) copy shall be returned to the subdivider, and the other shall be retained in the Planning and Zoning Commission's records.
5. Approval or conditional approval of the preliminary plat shall not constitute approval of the final plat. Rather it shall be deemed an expression of approval to the layout submitted on the preliminary plat as a guide to the preparation of the final plat. The final plat shall be submitted for approval by the Planning and Zoning Commission and the Town Council upon fulfillment of the requirements of these regulations and the conditions of the conditional preliminary plat approval, if any.
6. Preliminary Plat Requirements: Preliminary plat shall be submitted on one or more sheets not larger than thirty-six inches by forty-two inches (36" x 42") at a scale not greater than one inch equal to one hundred feet (100').

    All preliminary plats shall contain the following information:

a. Proposed name of subdivision and its location by section, township, and range; small-scale vicinity map showing relative location of the plat; reference by dimension and bearing to section corners; and subdivision boundaries clearly identified.

b. Name, address, and phone number of landowner (and subdivider, if not the same).

c. Name, address, and phone number of engineer, surveyor, landscape architect, or land planner preparing the plat, including registration number if registered.

d. Scale, north point, and date of preparation, including dates of any subsequent revisions.

e. Topography by contours relating to USGS survey datum or other datum approved in writing by the County Engineer, to be shown on the same map as the proposed subdivision layout. Location and elevation of the benchmark used should also be shown on the plat. Acceptable contour interval: grades up to five percent (5%), two feet (2'); five percent (5%) to 10 percent (10%) grades, five feet (5'); grades over ten percent (10%), ten feet (10').

f. Location by survey of streams, washes, canals, irrigation laterals, private ditches, culverts, lakes, or other water features, including direction of flow and water level elevations, and location and extent of areas subject to inundation and whether such inundation is frequent, periodic, or occasional.

g. Location, widths, and names of all existing streets, pathways and improvements therein; railroads; utility easements or rights-of-way, including any existing facilities therein; public areas, all existing structures, with an indication of whether or not they are to remain; and municipal corporation lines within or adjacent to the tract, and to be accompanied with a Preliminary Title Report.

h. Name, book, and page number of any recorded subdivisions within or having a common boundary with the tract, or notation "unsubdivided" where appropriate.

i. Location, width, and names of proposed streets, alleys, drainage ways, crosswalks, and easements, including all connections to adjoining platted or unplatted tracts.

j. Lot Layout, including minimum building setback lines related to all streets; typical lot dimensions (scaled); dimensions of all corner lots and lots on curvilinear sections of street; each lot numbered individually

k. Designation of all land to be dedicated or reserved for public or semi-public use, with use indicated.

l. Reference by note to the source of proposed electricity, gas, and telephone service, and whether such service will be underground.

m. If Plat includes land for which multi-family, commercial, or industrial use is proposed, such areas shall be clearly designated together with existing zoning classification, present district boundary lines and status of any pending zoning change.

n. Preliminary draft of proposed deed restrictions, including provisions for use and maintenance of commonly-owned facilities, if any.

o. Sewage disposal: It shall be the responsibility of the subdivider to furnish the County Health Department such evidence as that Department may require for its satisfaction as to the design and operation of sanitary sewage facilities proposed. A statement as to the type of facilities proposed shall appear on the preliminary plat.

p. Subdivisions Utilizing Septic Tanks: Where the proposed sewage disposal system will be by individual lot septic tanks, percolation tests and test boring logs in accordance with the requirements of the County Health Department shall be taken on the proposed subdivision and submitted with the preliminary plat.

q. Water Supply: It shall be the responsibility of the subdivider to furnish the County Health Department such evidence as that Department may require for its satisfaction as to the facilities for supplying domestic water. A statement as to the type of facilities proposed shall appear on the preliminary plat.

r. Storm Water Disposal: Preliminary layout of proposed system, location and invert elevation of outlet, and statement as to extent of improvements proposed, if any.

B. FINAL PLAT, ENGINEERING DRAWINGS, AND RECORDING

The final plat stage includes submittal, review, and approval of the final plat by the Town Council and recording of the plat with the County Recorder. Application for approval of the final plat is made to the Zoning Administrator.

1. Final Plat to be Submitted: A final plat shall be submitted to the Zoning Administrator within one (1) year of preliminary plat approval. The Zoning Administrator shall determine the completeness of the application within fourteen (14) days of submission. An application that is deemed complete shall be circulated for departmental review. If the application is incomplete, the Zoning Administrator shall provide the applicant with written notice of the specific deficiencies in the application.

   The final plat shall conform to the approved preliminary plat and any stipulation attached thereto by the Zoning Administrator or Planning and Zoning Commission. Copies of such final plat, the number to be determined by the Zoning Administrator, shall be filed with the Department, including one (1) electronic and one (1) hard-copy original, which shall bear the original signatures of the owner or owners and be duly acknowledged. The final plat shall be submitted, along with an application form and the final plat filing fee, to the Zoning Administrator.

2. Departmental Review of Final Plat: Departmental Review of Final Plats shall be in accordance with Section 703.A.2, except that:

   If additional information or changes are recommended by any of the reviewing departments, a revised final plat must be submitted to the Zoning Administrator until all reviewing departments and agencies are satisfied. Resubmittals of a final plat shall not require a separate filing fee. Referral and scheduling of a revised final plat shall be the same as that required for the original final plat.

   If the final plat is complete but the time limit has expired or it is not in conformance with the preliminary plat or stipulations attached thereto, it will either be returned to the subdivider for compliance or be referred to the Planning and Zoning Commission for review and recommendation before being forwarded to the Town Council.

   If a subdivision is predicated upon a change of zoning, the final plat will not be approved until the necessary zoning has been adopted by the Town Council.

3. Planning and Zoning Commission Findings: Once a final plat has been accepted by the reviewing departments and the Zoning Administrator, it shall be referred to the Planning and Zoning Commission, which shall hold a public hearing and recommend approval, recommend approval with conditions, or recommend denial and the reasons therefor. The Commission shall render its decision in the form of a written recommendation to the Council, which may be via a request for Council action or via the transmission of the Commission meeting minutes to Council.

4. Town Council Approval: The Town Council shall hold a public hearing for all final plats proposed within the Town of Jerome, and shall either approve, approve with conditions, or deny an application for a final plat.

   When the final plat has been approved by the Town Council, the Mayor shall be authorized to sign the plat for recording at the time that all Subdivision Improvement Requirements of Section

710 of this Ordinance have been met. After the Town Council's approval, the plat shall be assigned to the Zoning Administrator who shall transfer the recording fee and approved final plat to the County Recorder's Office for recording after the improvement requirements and stipulations have been met. The subdivider will be notified of the date book and page number of the official recording.

If the Town Council disapproves the final plat, it shall express the reasons therefor within the minutes of the meeting of which one copy shall be attached to the plat and returned to the subdivider.

The subdivider or their agent, engineer or land surveyor shall be present at the meeting set for the date of approval.

5. Legal Survey: The final plat shall be based on a survey of the subdivision and shall conform to the approved preliminary plat and any stipulations attached thereto by the Planning and Zoning Commission. The plat shall show the title or name under which the subdivision is to be recorded, with the name of the engineer or surveyor platting the tract.

   The engineer or surveyor shall in every case have a Certificate from the Arizona State Board of Registration for Engineers and Land Surveyors. The name or title of the subdivision shall not duplicate the name of any existing subdivision.

6. Final Plat Requirements: The record plat shall be drawn on plastic or other non-shrinking material on a sheet not exceeding thirty-six inches by forty-two inches (36" x 42") in size. Copies of the record plat shall be reproduced in the form of blueline, or blackline prints on a white background. The plat shall be drawn to an accurate scale of not more than two hundred feet (200') to an inch and preferably one hundred feet (100') to an inch.

   The final plat shall contain the following information:

   a. A Title, which includes the name of the subdivision and its location by section, township, range and county.

   b. Name, registration number and seal of the registered professional engineer or land surveyor responsible for preparing the plat.

   c. Scale (written and graphic), north point and date of plat preparation.

   d. Location and description of cardinal points to which all dimensions, angles, bearing and similar data on the plat shall be referenced.

   e. Any excepted parcel(s) within the plat boundary, accurately described by bearings and distances. Proper street and alley dedications adjacent to any proposed tracts or excepted parcels shall be provided by the subdivider by inclusion within the plat or by separate dedication noted on the plat.

   f. Boundaries of the tract to be subdivided fully balanced and closed, showing all bearing and distances determined by an accurate survey in the field. All dimensions shall be expressed in feet and decimals thereof to the hundredth. No plat showing plus or minus distances will be approved. Corners of the plat should be noted and monuments found or set should be indicated; each of the two (2) corners of the subdivision traverse shall be tied by course and distance to separate section corners or quarter-section corners or other survey monuments as may be acceptable to the Town Engineer. The Planning and Zoning Commission may make such office and field checks as may be necessary to assure the correctness of the plat and may require the owner of the subdivision to pay for such checking.

   g. Names, centerlines, right-of-way lines, courses, lengths and widths of all public streets, pathways, alleys, crosswalks and utility easements; radii, points of tangency and central angles of all curvilinear streets and alleys, and radii of all rounded street line intersections.

h. All drainage-ways shall be shown on the plat. The rights-of-way of all major drainage-ways, as designated by the Town Engineer, shall be dedicated to the public.

i. The location, width and use of all public or private utility easements shall be noted. All private utility easements shall be marked private easements.

j. Location and dimensions of all lots shall be shown. All minimum setback lines shall also be located and dimensioned.

k. All lots shall be numbered consecutively throughout the plat. Other Parcels, “tracts” and private parks shall be so designated, lettered or names and clearly dimensioned.

l. The accurate outline of all property which is offered for dedication for public use with the purpose indicated thereon, and all property that may be reserved by deed covenant for the common use of the property owners in the subdivision.

m. Name, book and page number of adjacent recorded subdivision, with location of existing adjacent lots, easements and rights-of-way, shown, or notation “unsubdivided” where appropriate. All proposed conditions should be graphically differentiated from existing conditions on adjacent properties and on excepted parcels within the plat.

n. The original and one copy of any private deed restrictions to be imposed upon the plat or any part or parts thereof shall be submitted with the final plat. Said deed restrictions must be in proper form to be recorded as a separate instrument. Space for cross-referencing to the deed restrictions shall be provided on the plat, to be completed by the County Recorder, e.g. “See Restrictions Recorded in Docket _____, Page _____, Yavapai County Recorder’s Office.”

o. Dedications: Statement of dedication of all roads, streets, alleys, crosswalks, drainage ways, and other easements for public uses, as shown on the plat, by the person holding title by deed to the lands, by persons holding any other title of record, by persons holding title as vendees under land contract, and by wives of said parties. If lands dedicated are mortgages, the mortgagee shall also sign the plat. Dedication shall include a written description of the tract. Signatures must be witnessed. If the plat contains private streets, the public shall be reserved the right to install and maintain utilities in the street and the right to maintain and control drainage and flood diversion channel.

p. Acknowledgement of Dedication: Execution of dedication, acknowledged and certified by a notary public.

q. Space for approval by the Town Council under the signature of the Mayor and attested by the Town Clerk.

SECTION 704. HILLSIDE SUBDIVISIONS

A. PURPOSE

Planning, platting and development of hillside subdivisions involve special problems and require special handling by the subdivider and their engineer, and by the Planning and Zoning Commission, staff, and reviewing officials. Hillside problems include the preservation of scenic beauty for the benefit of the general public, safe construction of public improvements commensurate with lower density and lesser public use, and safe construction of private improvements related to sewage disposal, water supply, storm drainage, and foundation bearing.

B. LOT WIDTH AND AREA

Lot width and area shall be closely related to the terrain, drainage, percolation factors, or construction of sanitary sewers, with emphasis placed on the selection of homesites.

1. Existing topography shown by suitable contour interval with location of major and minor washes. A separate sheet showing proposed contours may also be required if extensive regrading is proposed.
2. Road profiles and cross-sections may be required at the discretion of the Town Engineer.
3. Percolation tests and test boring logs in accordance with the requirements of the County Health Department should be taken at the proposed subdivision prior to the submittal of the preliminary plat.

C. PLAT PROCESSING TIME

Due to problems requiring special field and office review by the County Health Department, the Town Engineer, and the Staff, subdividers should expect processing time for hillside plats to exceed that otherwise required for normal plats.

D. HILLSIDE SUBDIVISION DESIGN

Special problems of hillside subdivision design are discussed under Section 709 Design Standards.

SECTION 705. REVISIONS OF PLATS OR REPLATS

A. Any Division of a lot in a recorded subdivision into five (5) or more parcels, or any changes in lot lines involving five (5) or more adjoining lots in a recorded subdivision, but creating no new street, may be processed in accordance with Final Plat Procedures on these Subdivision Regulations, after a Pre-Application Conference with the Zoning Administrator.

B. Any replat involving dedication or abandonment of land for a public street shall comply with all procedures set forth in these requirements, Sections 706 and 707.

C. If abandonment of a street, pathway, alley or public utility easement in a previously recorded subdivision is necessary, the replat of that area shall not be forwarded to the Town Council for final action until abandonment proceedings are completed and recording data noted on the final plat.

SECTION 706. ABANDONMENT OF A RECORDED SUBDIVISION OR REVERSION TO ACREAGE

A. If no lots in the subdivision, for which a final map has been approved and recorded, have been sold within three (3) years from the date of recordation, or if none of the improvements have been made within two (2) years from the date of approval, the Town Council may on its own motion hold a public hearing after notice, to determine whether the approval of such final map should be revoked. Such revocation shall be effective upon recordation of a certified copy of such resolution; and thereupon, all streets, rights of way, and easements dedicated or offered for dedication by such map shall be of no further force or effect.

B. Pursuant to provisions of Title 18, Chapter 2, Article 1, Section 18-201, and Chapter 5, Article 1, Sections 18-501-508, ARS, the abandonment of all or part of a recorded subdivision may be initiated by written petition to the Town Council, said petition to be signed by ten (10) or more owners of real property in Jerome, requesting abandonment of all streets, alleys and easements within said subdivision and giving the legal description and recording information thereof.

C. Applications or petitions for abandonment are filed with the Clerk of the Town Council and referred for recommendation to the Zoning Administrator, Town Engineer, and utility companies concerned.

D. Such abandonment may necessitate consideration for rezoning.

E. Any action considered by the Council relating to revocation of all or part of a subdivision whether plots or lots and rights-of-way shall be referred to the Planning and Zoning Commission for evaluation for the following:

   1. Conformance with the Town's General Plan.
   2. Correlations with proposed development in adjacent areas.
   3. Recommendation as to whether or not zoning changes should accompany such action.
   4. Effect of such action on existing development in areas affected by proposed reversion or abandonment.

F. Any other actions applicable to the above process and permitted by State Laws are permissible.

G. Requisite actions under Article 1, Chapter 520, Title 18, Arizona Revised Statutes to abandon the streets and easements should be carried on separately and simultaneously with any procedure to abandon a subdivision or revert it to acreage.

SECTION 707. AMENDED SUBDIVISION MAPS

A. Any map of a subdivision that has been filed for record may be amended to correct an error in any course or distance or other necessary item that was omitted therefrom, or to correct a drafting, graphic, technical or similar type error; by the filing for record of an amended map of said subdivision. The County Recorder shall examine such amended map and if such examination discloses that the only changes on the amended map are changes above authorized, he shall certify this to be a fact over his signature on the amended map. Thereafter, the amended map shall be entitled to be recorded in the office of the Recorder in which the original subdivision map was recorded. Such map shall be marked "AMENDED MAP OF _____". Subsequently, if more than one amended map is necessary, the successive maps shall be titles "SECOND AMENDED MAP OF _____" and follow in numerical sequence order. The use of the terminology of "Amended Map" shall not be used to change or vary or add any lot lines, streets, or easements or statements that were not contained on the approved preliminary map, since such actions necessitate re-processing of the plat.

SECTION 708. SUBDIVISIONS WITHIN THREE (3) MILES OF TOWN

In accordance with Arizona Revised Statutes, Section 9-474 as amended:

A. When the owner of land, the whole or part of which is an unincorporated area within three (3) miles from the corporate limits of the Town of Jerome, desires to subdivide the land into lots for the purpose of selling it by reference to a map or plat they shall first given written notice to the Town of their intention to subdivide the land, naming and describing the land so that it may be identified upon the ground, and shall submit to the Town a tentative plat of the land showing the manner in which he desires to subdivide the land.

B. If the Town desires that the streets or alleys of the tract conform with the projected streets or alleys f the Town of Jerome, or of an adopted plan of the Town of Jerome, then the Town may, at its cost, project the lines of its streets and alleys to the nearest outer boundary lines of the subdivision and thereon mark the same, and shall supply the owner with the courses of the lines.

C. The Town of Jerome may also submit to the owner a written report recommending changes in the submitted plat of the location or dimension of streets, pathways, alleys, parks, easement for rights-of-way or property intended to be devoted to the use of the public. One copy of the report shall be delivered to the Board of Supervisors of the County.

D. If the report is given to the owner, or the lines are so marked and the courses given the owner within thirty (30) days from the date of service of notice of intention to the Town, then the owner shall cause the land to be subdivided into blocks, lots, streets, alleys, parks and parkways, so as reasonably to conform to the report and the projected lines and courses thereof, and shall prepare in duplicate an accurate map or plat thereof on cloth, drawn and attested by a registered civil engineer or registered land surveyor from their survey of the ground. The engineer or registered land surveyor shall, in making the surveys, leave sufficient permanent monuments so that another surveyor or engineer may retrace their work. The nature and location of the monuments shall be plainly shown on the plat.

E. The plat shall particularly set forth and describe:

    1. Parcels of ground within the tract or subdivision to be used for public purposes or offered for dedication for public uses, and their dimensions, boundaries and courses.

    2. Either by number or letter, lots intended for sale, or reserved for private use, and their dimensions, boundaries and courses.

    3. The location of the subdivision into lots with reference to adjacent subdivisions, the maps or plats of which have been previously recorded, or if none, then with reference to corners of a United States survey, or if on land unsurveyed by the United States, then to some prominent artificial monument established for such purpose.

SECTION 709. DESIGN STANDARDS

A. GENERAL

1. The Planning and Zoning Commission shall insure that appropriate provisions are made for the harmonious development of the Town by requiring (1) the coordination of streets within subdivisions with existing or planned streets or with other features of the General Plan, (2) a regulation of population density and traffic volume which will create conditions favorable to public health, safety and convenience, and by (3) recommending adequate spaces for public use (such as for parks, schools, recreational areas, etc.).
2. Adequate access shall be provided from an existing public road to land being subdivided. Approval of such access shall be a condition of approval of the plat by the Commission and Council.
3. In all subdivisions, it is urged that due regard be shown for all natural features such as trees, water courses, historical and archaeological sites, and similar community assets which, if preserved, will add attractiveness and value to the property and community.
4. Portions of property within the ownership of the subdivider, contiguous to the subdivided property shall not be excluded from within the boundaries of a subdivision when needed or required for any traffic, drainage or flood control facility pertinent to said subdivision.
5. Portions of property within the ownership of the subdivider, contiguous to the subdivided property but not included within the boundaries of the subdivision, shall be of such size or shape that they could be used for some purpose compatible to surrounding development and meet the specifications of other Town regulations.
6. Separate parcels omitted from a preliminary plat, that form lots or building sites of less than five (5) acres each, or that could be part of this development by extending proposed roads shall be included in the proposed plat.
7. The design of those elements of a subdivision involving structural matters, location and design and building of roads, pathways, drainage provisions, water supply and sewage disposal shall be made by an engineer registered in the State of Arizona and qualified to specify the standards for such design or by an assistant under their direction and supervision.
8. A supplementary set of standards may be adopted by the Commission and approved by the Council on each item as described. These standards shall be separate from this Ordinance and shall be developed by the Town Engineer. They may be revised whenever environmental circumstances or technological improvements necessitate or justify such changes.
9. It is the responsibility of the developer to comply with these regulations. At any time in the processing of a subdivision tract that non-compliance is detected notification by certified or registered mail of said non-compliance shall be transmitted to the developer. If compliance is made by the developer processing shall proceed from date of compliance as if the non-compliance had not existed. If compliance is not made within thirty (30) days of the mailing of the certified letter, processing shall be terminated. Once processing is terminated, a tract must be resubmitted.

B. SUITABILITY OF THE LAND

1. The Planning and Zoning Commission shall not approve the division of land as submitted if, from adequate investigations, it has determined that said land is not suitable for the kind of development proposed due to such factors as flooding, bad drainage, steep slopes, rock formations, soils or design features likely to be harmful to the safety, welfare and general health of the future residents, unless reasonable corrections acceptable to the Commission are submitted by the developer.

C. WATER COURSES

1. In the event that the subdivision is traversed by or is contingent to lakes, streams, or other bodies of water, the subdivider shall provide a right-of-way for storm drainage conforming substantially with the line of such natural water course, channel, stream, or creek, or provide an acceptable realignment of said water course.

D. STREETS, GENERAL

2. The arrangement, character, extent, grade, width, and location of all streets shall conform to the General Plan or the preliminary plans of said Commission.
3. Where such is not shown on the General Plan or preliminary plans, the arrangement of streets shall provide continuation or appropriate projection of existing major streets in surrounding areas. All center lines shall be contiguous territory. In cases where straight continuations are not physically possible, such center lines may be continued by curves.
4. The minimum width of right-of-way, measured from lot line to lot line, shall be as prescribed by the Town Engineer, the General Plan, and these regulations. Proposed streets shall extend or project existing streets at their same or greater width, but never at a width less than that prescribed by established standards.
5. All streets and highways shall be graded, surfaced, and improved to cross sections and grades approved by the Town Engineer and as established by these regulations. The subdivider shall improve the extension of all subdivision streets and other public ways to the intercepting shoulder line of any County road, Town street, or State highway.

   Grades given are the maximum allowed for certain short-range distances and do not imply permission for an extensive distance at maximum grade.
6. Structures or culverts shall be installed as deemed necessary by the Town Engineer for drainage, access, and public safety. Such structures and culverts are to be placed to grades and shall be of a design and size approved by the Town Engineer. Adequate drainage of the subdivision public ways shall be provided by means of said structures or culverts and by other approved means, in accordance with the engineering standards adopted by the Town Engineer.
7. All roads developed or improved in conjunction with subdividing shall either be:
   a. Built to Town standards, dedicated by the map and accepted by the Council.
   b. Built to Town Council standards, dedicated by the map and approved by the Council in conjunction with providing a Performance Bond of Assurance of Completion Bond.
   c. Built and offered for dedication by the subdivider, refused by the Council, but approved as private roads with adequate assurances of upkeep.
8. Adequate provisions shall be made in the design of subdivisions for access to each lot or parcel, and for access to adjacent properties.
9. Half roads or partial width rights-of-way should only be approved as partial major roads along a section line where no alternative design exists, or where said partial rights-of-way would require the dedication of additional contiguous rights-of-way to make it full width, provided that that developer or their representative shall include evidence that the additional right-of-way is available or is permanently reserved for future road purposes. Half roads should also be accepted where they are a portion of the road system approved in the General Plan.
10. When a tract fronts on an arterial road, the Commission may require such lots to have reverse frontage.
11. Provisions shall be made for railroad and other public or private utility crossing necessary to provide access to or circulation within the proposed subdivision, including the obtaining of all necessary permits from the public or private utilities involved, and any regulatory agencies having jurisdiction. The cost of such crossings shall not be assumed by the Town.

12. Minor Residential Streets: minor residential streets shall be designed to provide proper circulation of local traffic.
13. Dead-End Streets or Cul-de-Sacs:
    a. Minor terminal streets designed to have one end permanently closed shall not be more than six (6) times the minimum lot width nor one thousand three hundred twenty feet (1,320') long unless necessitated by topography. They shall be provided at the closed end with a circular turn-around or a cul-de-sac having a right-of-way radius, or at least forty-five feet (45').
    b. Where, in the opinion of the Commission, it is desirable to provide street access to adjoining properties, proposed streets shall be extended by dedication to the boundary of such property. Such dead-end streets shall be provided with a temporary turnaround having a roadway radius of at least forty-five feet (45').
14. Intersections:
    a. Street intersections shall be as nearly at right angles as possible, and no intersection shall be less than sixty (60) degrees.
    b. Property line radii at street intersections shall not be less than twenty-five feet (25'); the Town Engineer may require a greater curb radius.
    c. Whenever necessary to permit the construction of a curb having a desirable radius without curtailing the sidewalk at a street corner to less than normal width, the property line at such a corner shall be rounded or otherwise set back sufficiently to permit such construction.
15. Jogs in Minor Streets: Street jogs with centerline offset of less than one hundred thirty-five feet (135') shall not be approved.
16. Street Names: Proposed streets which are obviously in alignment with other existing names or numbered streets in that vicinity, as determined by the Zoning Administrator, shall be given the designation of said existing street. In no case shall the name for proposed streets duplicate those of existing streets within the same planning area, except as aforementioned, irrespective of the use of such varying suffixes as street, avenue, road, boulevard, drive, place, court, or other designation. Through its index of street names and numbers, the Commission can assist the subdivider in avoiding such duplications.
17. Street Standards and Improvements: Unless specifically requested by the subdivider and/or designated by the Planning and Zoning Commission or Town Council and agreed to by both parties, the following general street standards shall apply:

(see following page for general street standards)

Classification	Min. R/W	Street Section	Paved Section	General Thickness	Type Curbs	Maximum Grade	Minimum Curve Radius
Large Lot Residential (1-acre lots or larger)	50’	28’	24’	As Req’d by Town Engineer	W/O Curb With Wedge Curb	12%	100’
Residential	50’	36’	32’	As Req’d by Town Engineer	*Rolled or Vertical	12%	100’
Residential Collector	60’	42’	40’	As Req’d by Town Engineer	Vertical	8%	200’
Major Urban Collector	80’	58’	48’	As Req’d by Town Engineer	Vertical	6%	300’
Major Arterial (Rural Areas)	110’	28’	24’	As Req’d by Town Engineer	W/O Curb With Wedge Curb	6%	500’
Major Arterial (Urban Areas)	110’	2-40’ Divided	60’	As Req’d by Town Engineer	Vertical	6%	500’
Cul-de-sacs	45’ Radius	38’ Radius to back of curb		Roll	Rolled or Vertical		

*Except that for subdivisions wherein all lots are 18,000 sq. ft. or larger and have a minimum 100-foot frontage, redwood headers are permitted to protect paving at shoulders in lieu of concrete curbs; lots fronting on a cul-de-sac within such a subdivision may be excepted from the 100-foot frontage requirement.

Other types to be approved by the Zoning Administrator & Town Engineer.

All improvements to be installed in accordance with Town Engineering Standards.

18. Alleys: Alleys shall be provided to the rear of all lots used for business purposes, as deemed necessary, but will not be required for residential areas. Alleys may be permitted where a subdivider can produce evidence satisfactory to the Commission of the desirability of such provisions.
19. Sidewalks: Concrete sidewalks shall be constructed along at least one side of every street shown on the plat in accordance with applicable standard specifications of the Town. Minimum width shall be four feet (4'); except sidewalks shall not be required in subdivisions with all lots containing over eighteen thousand (18,000) square feet each.
20. Pathways may be constructed at locations other than adjacent to streets and may eliminate the need for sidewalks when approved by the Planning and Zoning Commission.
21. Block Design: The length, width, and shape of blocks shall be determined with due regard to provisions for adequate building sites, the zoning requirements as to lot area and dimensions, limitations and opportunities of topography, and needs for convenient access, circulation, control, and safety to streets and pedestrian traffic.
    a. Length: Block shall not be more than one thousand three hundred twenty feet (1,320) in length except as the Commission considers necessary to secure efficient use of land or as a desired feature of street design.

       Any block having a length of six hundred feet (600') or greater may be required by the Planning and Zoning Commission to have provisions made for a pedestrian walk-through having a twelve-foot (12') right-of-way, when deemed essential for pedestrian circulation, access to schools, playgrounds, etc.

    b. Width: Blocks shall be wide enough to allow two (2) tiers of lots.

E. LOTS

1. Arrangement: The lot area, width, depth, shape, orientation, and the minimum building setback lines shall be appropriate for the location of the subdivision, for the type of development and use contemplated, and shall conform to the zoning requirements and these regulations.
2. Insofar as practical, side lot lines shall be at right angles to straight street lines or radial to curved street lines. Each lot must front upon a public street or road or approved access.
3. Accessibility: Each lot shall be accessible to the street on which it fronts. Where necessary, lots shall be graded as a condition of approval of a final map to ensure access to and adequate use of the property.
4. Minimum Size: The size, shape, and orientation of lots shall be such as the Commission deems appropriate. Each lot shall be suitable for the purpose for which it is intended and shall contain a usable building site. The area of a lot shall be deemed the area shown, exclusive of any area designed for road purposes or any easement for access or road purposes shown on the map.
5. Where lots are designed with minimum areas, corner lots shall be wider than minimum to provide adequate usable area, if necessary.
6. Large Tracts or Parcels: When the land is subdivided into larger than ordinary building lots, such parcels shall be arranged so as to allow for the opening of future streets and logical re-subdivision.
7. Lot Numbering:
    a. Each lot shall be designated by an Arabic numeral.
    b. If block designations are not used, numbering shall be in consecutive sequence within the block beginning with the number “1” or wherever lots have common side boundaries within a subdivision or within a block along each street and consecutive numbering shall follow from one block to another.
    c. When block designations are used, numbering shall be in consecutive sequence within each block area commencing with the number “1” for each block.
    d. Parcels and/or tracts shall be designated by capital letters and be designated in alphabetical sequence starting with the letter “A”.
8. Lot line adjustments, lot ties, and lot combinations may be administratively approved by Town staff without a public hearing, subject to application and review procedures established by the Zoning Administrator.

F. REFUSE, SANITARY SEWAGE, AND WATER SYSTEMS

1. Where a public sanitary sewer system is reasonable accessible, the subdivider shall connect with such sewer and provide a connection to each lot.
2. A sewer collection and treatment system shall be provided as a condition of approval for any subdivision containing lots or parcels less than one acre in area.
3. When connection to a sanitary sewer system is not available for lots or parcels of one acre or more, septic tanks or other disposal methods may be permitted provided that a statement is submitted to the Planning and Zoning Commission by the County Health Officer or their authorized representative certifying that field investigation has shown that ground slopes and soil conditions will allow for satisfactory disposal by this method with the lot arrangement and size as shown on the subdivision map and that necessary drainage fields are either contained within the property or permitted by adjoining land owners.

4. In areas where public sanitary sewers are not reasonable accessible, but where the future owning agency agrees to effect temporary disposal of sewage, the subdivider shall plan and construct sewers within and for the subdivision for connection with a future public system.
5. Water mains connecting with the existing Town system shall be installed to serve each lot. All connections shall be subject to the approval of the Town Engineer.
6. Water mains and fire hydrants shall be installed to grades, location, design, and sizes on plans submitted by a registered engineer in the State of Arizona and approved by the Town Engineer and the Town Fire Department.
7. When connection to a Town water system is not available, the subdivider may provide service by establishment of a mutual water system in which case water mains and fire hydrants shall be installed to grades, location, design and sizes as submitted by a registered engineer in the State of Arizona and approve by the Town Engineer, and the source of supply developed and improved to the satisfaction of the County Health Officer or their representative so that the subdivision may be adequately supplied with water.
8. A Water system shall be provided as a condition of approval for any subdivision containing lots or parcels less than two (2) acres in area.
9. In the case of a subdivision with lots over two (2) acres in area, water supply may be from other than a community system. In this case sufficient evidence shall be submitted showing that potable water is available and can be obtained for all lots in the subdivision.
10. Minimum lot size may be affected by requirements of the County Health Department pertinent to water and sanitary sewage systems.
11. Public Sanitary Sewage and Water Systems: The requirements for development of public water supplies and sewage disposal systems shall not be less than those outlined by the Arizona State Health Department regulations and engineering criteria for such installations.
12. Refuse Disposal: The subdivider shall indicate the method of refuse collection and disposal.

G. EASEMENTS AND UTILITIES

1. Except where alleys are provided for that purpose, easements at least eight feet (8') in total width shall be provided along rear lot lines for poles, wires, conduits, sanitary sewers, gas mains, water mains, or for other utilities. Where necessary, additional easements shall be located along the side lot lines. Half or partial easements may only be approved where written commitment of dedication of necessary additional easements are on record. All easements shall be in accordance with those approved by the utility companies concerned.

H. MONUMENTS

1. Survey monuments acceptable by the Town Engineer shall be set for all points of reference on the outside boundary, at each lot corner and/or at all points of curvature or tangency of the subdivision.

   Whenever streets are improved to the extent that paving is included, survey monuments will be required at all street intersections and at the points of curvature and point of tangency of all curves. Monuments shall be set as approved by the Town Engineer.

I. PUBLIC REQUIREMENTS

1. During the design and layout of the subdivision, consideration shall be given to the requirements for public land and open spaces as specified in the General Plan. The Planning and Zoning Commission may require certain lands to be reserved for public purposes in conformance with the General plan as specified in these regulations.

J. AESTHETIC CONSIDERATIONS

1. The subdivider shall give consideration to preserving natural features in the design and layout of a subdivision. Lots and buildings should be oriented to make advantageous use of any views or natural features.

   All utility installations shall be located underground, except as exempted below, to assure that they do not detract from the design and amenity of the subdivision.

   Exemptions:

   a. Electric transmission lines over 600 Volts, and electric distribution feeder lines, as defined elsewhere herein, together with switchyards, substations and equipment.

   b. Temporary service facilities, such as facilities to furnish emergency service during an outage, facilities to provide service to construction sites, or other service of limited duration.

   c. Above ground appurtenance of underground utility systems with a total height not to exceed seven feet (7').

K. SPECIAL DEVELOPMENT SUBDIVISION

1. Modified standards and requirements of these regulations may be accepted by the Planning and Zoning Commission in the case of a plan and program for a neighbor unit, which in the judgement of the Planning and Zoning Commission provide adequate public recreation, light, air and service needs for the tract when fully developed and populated, and which also provides such covenants or other legal provisions as will assure conformity to an achievement of the General Plan or zoning regulation.
2. When such a preliminary development is submitted for appraisal, it shall be accompanied by a petition for variance, as outlined in these regulations, setting out all deviations from standards as herein required, and explaining the reasons therefor.
3. Special development variations may include (1) Streets of less width than standard requirements, but with adequate provisions for off-street parking; (2) up to four (4) lots served by a common driveway where topographic conditions would justify such treatment; (3) up to four (4) buildings per site in a cluster of less than minimum lot area of a corresponding contiguous area plus the building site areas brings the total combination of building sites and common area to minimum area standards; and provisions are made that each lot owner has an equal undivided interest in the contiguous parcel and it is restricted to be used only for recreational purpose or to remain "open land"; (4) special common sanitation facilities.
4. Special development subdivisions shall be regulated as outlined in the zoning regulations.

L. SPECIAL DESIGN STANDARDS FOR HILLSIDE SUBDIVISIONS

1. Street grades shall not exceed twelve percent (12%)
2. Street grades of twelve percent (12%) shall have a maximum length of six hundred feet (600').
3. Minimum dedicated street right-of-way; to be justified by extreme cross-slope cut and fill areas or similar conditions.
4. "T" or "Y" type turning and backing areas may be substituted for circular turn-arounds.
5. "Panhandle", double frontage, and other unorthodox lots may be permitted so long as it can be adequately demonstrated that no such lot will adversely affect any other lot.
6. Private streets or drives serving not more than three (3) lots shall be permitted to a maximum length of three hundred feet (300').

SECTION 710. IMPROVEMENTS

A. GENERAL

The subdivider shall cause to be installed and constructed all street and road improvements, public utilities, survey monuments and markers and lot grading. All such improvements shall conform to the requirements of these regulations and all other applicable Town, County and State standards, specifications, codes and regulations. These standards may be obtained, among others, from the Town Clerk, Town Council, Zoning Administrator, County Health Department, County Highway Department.

1. The Subdivider shall be responsible for the cost of the following:
    a. Setting of survey monuments and markers.
    b. Street and road construction for all street improvements including base, grading, curbs, gutters, sidewalks, pavement, street trees, street name signs, culverts and bridges.
    c. Water and sewer line installations including fire hydrants and manholes.
    d. Required storm water system and/or other drainage improvements.
    e. All field density and related testing of base, subbase and other compacted backfill, gradation tests, concrete cylinder tests, asphalt tests and/or other related tests required to insure minimum standard requirements.
2. The subdivider shall be responsible for assuring the installation of the following, by negotiating with private companies, or by providing the cash for their installation when considered necessary by the Planning and Zoning Commission and the Town Council.
    a. Electric Lines.
    b. Streetlights.
    c. Gas Lines.
    d. Street Naming Signs.
    e. Telephone Lines.
3. Building permits will not be issued for new construction until all required street and utility improvements adjacent the property to be improved are installed, or assurance provided that they will be constructed by the subdivider.

B. ENGINEERING DRAWINGS

1. Within one hundred and twenty (120) days from final plat approval, the subdivider or developer shall submit to the Planning and Zoning Commission and the Board of Supervisors engineering drawings and construction plans for approval prior to the commencement of any work by the subdivider.

    At the time of submitting improvement plans and engineering drawings, the subdivider shall submit an estimate of the costs of constructing the required improvements to determine the amount of performance or surety guarantee to be required. The estimate shall specify the sources used as a basis to determine unit and project costs. The Planning and Zoning Commission and/or Board of Supervisors shall make any checks and revisions in the estimates as they deem necessary prior to approval.

    All required supplementary engineering studies or tests as required by the Planning and Zoning Commission and/or Board of Supervisors shall be approved prior to any construction activities by or for the subdivider.
2. All required engineering studies and exhibits shall be prepared by qualified and legally registered or certified engineers or engineering firms.
3. Contractors engaged by the subdivider to install required improvements shall be licensed and registered as required by State or local law.

4. A time construction schedule of installation of public improvements shall be submitted to and approved by the Planning and Zoning Commission and the Town Council prior to the commencement of any and all construction activities. The approved schedule shall be flexible enough to allow delays due to inclement weather or other unavoidable circumstances. In the event that construction at some time can no longer adhere to the approved schedule; the subdivider shall submit a revised schedule to the Planning and Zoning Commission and the Town Council for approval.
5. It may be desirable, during construction of improvements, for the subdivider to modify some standards and specifications of the approved engineering drawings. In this event, the subdivider shall, prior to making such modifications, submit a schedule of such modifications with reasons of necessity to the Planning and Zoning Commission and the Town Council for approval.
6. At the completion of all new construction relating to street or utility improvements the subdivider shall submit "as built drawings" to the Town Engineer prior to approval of the work by the Engineer.
7. The subdivider shall submit an estimate for the costs of constructing the required improvements to determine the amount of performance guarantee to be required. The estimate shall specify the sources used as a basis to determine unit and project costs. The Planning and Zoning Commission and/or Town Council shall make any checks and revisions in the estimates as they deem necessary prior to approval. The Town Engineer shall advise the Commission and Council of the adequacy of the estimate submitted.

C. REQUIRED IMPROVEMENTS

1. The subdivider shall cause to be set permanent survey monuments at locations approved by the Planning and Zoning Commission or Town Engineer, provided that ordinarily such monuments shall not be more than one thousand three hundred fee (1,320') nor less than six hundred sixty fee (660') apart; and, in addition, monuments of iron pipe, steel bars, or concrete, shall be set at all street intersections, at all tangent points as may be required by the Planning and Zoning Commission to make the retracing of the lines shown on the Town Official maps reasonable convenient.
2. The subdivider shall cause to be installed public water facilities including fire hydrants, public sanitary sewer systems, and a storm sewer system and/or other drainage improvements designed and constructed according to specifications approved by the Planning and Zoning Commission and the Town Council where required.
3. The subdivider shall cause to be installed and constructed according to specifications approved by the Planning and Zoning Commission and the Town Council, all street improvements including grading, surfacing, curb and gutter, sidewalks, street name signs, streetlights and telephone lines where required.

D. GUARANTEES OF PERFORMANCE

1. Before recording of a plat by the Town Council, the subdivider shall have dedicated all streets, pathways and alleys in the proposed subdivision together with sidewalks, curbs and gutters, in accordance with the requirements that the Planning and Zoning Commission may impose and specify as to grading, paving, width, location, drainage, courts, culverts, bridges, and other necessary requirement. The subdivider shall enter into a written agreement with the Town Council wherein the subdivider shall have deposited a performance bond in an amount established by the Town Council or have deposited with the Town of Jerome sufficient funds to cover the cost of such improvements. The amount of the performance bond or the funds in escrow shall be determined from the cost estimates as specified in 710.B.7 and/or 710.B.1 above, or letter of assurance from an acceptable financial institution that sufficient funds have been set aside for pledged to complete such improvements.

E. MINIMUM STANDARDS FOR SUBDIVISION STREET PAVING

1. Streets; Improvement Security: All streets covered by these regulations shall be paved, with curbs and gutters installed when required prior to the public sale of any land appurtenant to said streets. In lieu of the installation of paved streets, curbs and gutters by the subdivider, and in order to insure the proper installation of said paved streets, curbs and gutters, the subdivider may provide security as follows: (1) post bond, (2) establish a trust, or (3) provide for other appropriate security; provided however, that the following requirements are met:

    a. The subdivider shall declare their intention of proceeding under this Section in their letter of intent, and further, they shall designate whether a bond, trust, or some other appropriate security shall be provided. The letter shall be notarized.

    b. That said bond, trust, or other appropriate security be submitted to the Town Council for acceptance prior to recording the final plat by said Council.

    c. That the amount of said bond, trust, or other appropriate security be based on a cost estimate prepared by a registered professional engineer in an amount to cover the complete installation of the improvements and be approved by the Town Engineer prior to submission of said estimate to the Town Council.

    d. That the completion date for the installation of said paved streets, curbs and gutters be declared and notice given to the Town Council and approval given by the council prior to the final plat approval by said Council.

    e. The security as herein before required shall provide for its forfeiture to the Town unless good and sufficient reasons can be provided that said improvements have not been installed in accordance with these regulations or are not accepted by the Town by the declared completion date due to the default of the subdivider; the amount of forfeiture shall be the cost to the Town to complete the installation of said improvements in accordance with these regulations.

    f. All matters contained in this Section may be referred to the Planning and Zoning Commission by the Town Council for preliminary study and recommendation.

    g. The Town Council considering recommendations from the Planning and Zoning Commission may require improvement security, as delineated for streets in this ordinance, for private streets, road, or driveways in an approved planned area development prior to recording a final subdivision plat.

2. Waiver of Street Improvements in Certain Subdivisions: Paving widths, curbs, gutters and sidewalks may be waived by the Town Council considering recommendations of the Planning and Zoning Commission, subject to topographic terrain or aesthetic conditions.

3. Acceptance of Streets: Subdivision streets will be accepted for maintenance by the Town only when they meet requirements of the minimum standards as set forth by the Town Engineer and all other applicable Section of these regulations.

F. PARTIAL DEVELOPMENT; DECLARATION OF IMMEDIATE IMPROVEMENT

1. The subdivider may provide plans for the partial development of subdivisions, whereby Town Council in accepting the final plat for recording, shall require that the bond, trust or other appropriate security be sufficient to cover that portion of the subdivision premises which the subdivider has elected to immediately improve, as that portion is described in a “declaration of immediate improvement” which the subdivider shall submit to the Town Council, provided that no improvement or sale of lots shall be commenced in any other area of the subdivision not covered by a “declaration of immediate improvement” on the new area, and provided further that the proper security is approved as specified herein, and provided further that a completion date for the improvements for each area be declared in each “declaration of immediate improvement”.

SECTION 711. VARIANCE AND APPEALS

A. HARDSHIP

The Planning and Zoning Commission and the Town Council may authorize variances from the terms of these regulations, where, by reason of exceptional or extraordinary situation or condition of a tract of land, the strict application of any regulation enacted herein would result in peculiar and exceptional practical difficulties to, or undue hardship upon, the subdivider. Such variance may be given provided such relief may be granted without detriment to the public good and without impairing the intent and purposes of these regulations.

B. APPEALS

Any aggrieved person whose preliminary plat has been rejected or disapproved by the Planning and Zoning Commission may appeal to the Town Council for a hearing within thirty (30) days after such rejection. The Council's decision for both preliminary and final plats shall be final and shall become effective immediately. Notice of the decision shall be mailed to the applicant at the address shown in the application.

SECTION 712. LEGAL PROCEDURE, VIOLATION, PENALTIES AND REMEDIES

A. LEGAL PROCEDURES

Any use of development of property contrary to the provisions of the Subdivision Regulations shall be and the same is hereby declared to be unlawful, against the public safety and welfare, and a public nuisance and the Town Attorney shall, upon order of the Town Council, or in their own initiative, immediately commence all necessary actions or proceedings for the abatement, enjoinment and removal thereof in the manner provided by law, shall take such other lawful steps and shall apply to such court or courts as may have jurisdiction to grant such relief as will abate, enjoin and restrain any person, firm, or corporation from setting, developing, erecting, building, moving, or maintaining any such building or using any property contrary to these provisions of these Subdivision Regulations, or otherwise violating these Subdivision Regulations.

B. VIOLATIONS AND PENALTIES

Any violations of this Ordinance shall be subject to the enforcement provisions and penalties set forth in Chapter 18 of the Jerome Town Code.

C. REMEDIES

All remedies provided for herein shall be cumulative and not exclusive. The conviction and punishment of any person hereunder shall not relieve such person from the responsibility to correct said prohibited conditions. In addition to the other remedies provided in the Section, any adjacent or neighboring property owner who shall be especially damaged by the violations of any provisions of these Subdivision Regulations may institute, in addition to the other remedies provided by law, injunction, mandamus, abatement or any other appropriate action, proceeding or proceedings to prevent or abate or remove such unlawful erection, constructions, reconstruction, alteration, maintenance or use.

SECTION 713. AMENDMENTS

A. AMENDMENTS

The Planning and Zoning Commission and the Town Council may amend these regulations after giving public notice of any such proposed amendment and after holding a hearing thereon.

B. SUBDIVISION REVISIONS

No changes, erasures, modifications or revisions shall be made in the final plat after approval of the plat has been given by the Town Council.

SECTION 714. ENFORCEMENT AND EFFECTUATION

A. ACCEPTANCE

No final plat of a subdivision shall be approved by the Planning and Zoning Commission and accepted by the Town Council unless it conforms to all of the provisions of these regulations.

B. INTERPRETATION

1. In the interpretation and application of the provisions of these regulations, the regulations shall be regarded as the minimum requirements for the protection of the public health, safety, comfort, morals, convenience, prosperity and welfare.
2. These regulations shall not abrogate or annul any permits issued before the effective date of these regulations, nor shall they abrogate or annul any easement, covenant, or any other private agreement.

C. SEPARABILITY

1. If any article, section, subsection, sentence, clause, or phrase of these regulations is for any reason held to be unconstitutional or invalid by a decision of any court of competent jurisdiction, such holding shall not affect the validity of the remaining portions. The Planning and Zoning Commission hereby declares that it would have adopted these regulations and each article, section, subsection, sentence, clause and phrase thereof separately and irrespective of the fact that if any one or more of the articles, sections, subsections, sentences, clauses, or phrases be deemed unconstitutional or invalid.
2. If the application of any provisions of these regulations to any tract of land is declared to be invalid by a decision of any court of competent jurisdiction, it is hereby declared to be the intent that the effect of such decision shall be limited to that tract of land immediately involved. Such a decision shall not affect, impair or nullify these regulations as a whole or in any part in its application to any other tract of land.

D. REPEALS

All regulations or codes of the Town of Jerome inconsistent herewith, to the extent of such inconsistency, and no further, are hereby repealed. The repeal of any of the above-mentioned regulations, or codes, does not revive any other regulation or code. Such repeals shall not affect nor prevent the prosecution or punishment of any person for the violation of any regulation or code repealed hereby, for an offense committed prior to the repeal.

APPENDICES

APPENDIX A DEFINITIONS

Abutting - the condition of two adjoining properties having a common property line or boundary, including cases where to or more lots adjoin only a corner or corners.

Access, Direct – The provision for immediate ingress and egress of vehicles from an abutting property to an adjacent street.

Access, Indirect – The provision for ingress and egress of vehicles from an abutting property to an adjacent street, is shared by two or more properties or is channeled by some means indirectly to the adjacent street

Access Point – A driveway or other opening for vehicles to enter from or exit to a street.

Access, Private – A private access is an access not in public ownership or control by means of deed, dedication, or easement.

Access, Public – A means of physical approach available to the general public.

Accessory Building or Structure - A building or structure that is subordinate in size and purpose to the principal structure of the same lot or parcel and serving a purpose customarily incidental to the use of the principal structure or use of land.

Accessory building, Height of - the vertical measurement down from the highest point on the structure to an intersection with the horizontal projection of a plane established as the median between the highest and lowest points of original grade beneath the enclosed portion of the structure. (See Appendix for diagrams.)

Accessory feature - any manmade structure erected upon or appurtenant to real property

Accessory use - a use incidental, related, appropriate, and clearly subordinate to the main use of the lot or building, which accessory use does not alter the principal use of the subject lot or parcel.

Acre - an area of land containing 43,560 square feet.

Adjacent - nearby, but not necessarily touching.

Administrative and Professional Office - any building, structure, or portion thereof used or intended to be used as an office for a lawyer, architect, engineer, surveyor, planner, optometrist, accountant, doctor, dentist, or other similar professions.

Agriculture - the tilling of the soil, raising of crops, horticulture, viticulture, silviculture, small livestock farming, dairying and/or pasture and range livestock production, including all uses customarily incidental thereto but not including slaughter houses, fertilizer yards, or plants for the reduction of animal matter or any other industrial use which is similarly objectionable because of noise, odor, smoke, dust or fumes. Agriculture does not include the concentrated single-use operation of feed lots, hog, turkey, chicken, fur-bearing animals or other similar farms, unless these operations are operated in conjunction with or are a part of the crop production of the same or adjoining parcel under common ownership.

Alley - An unnamed public or private right-of-way less that is primarily designed to serve as secondary access to the rear or side of those properties whose principal frontage is on some other street.

Amendment - a change in the wording, context, or substance of this ordinance, or an addition or deletion or a change in the zone district boundaries or classifications of the zoning map.

Animal Hospital - Any building or portion of a building designed or used for the care, boarding, observation, and treatment of animals, including a veterinary clinic.

Antenna - Any structure designed for transmitting signals to a receiver or receiving station or for receiving television, radio, data, communication, or other signals from other antennas, satellites, or other services.

Antique - a product that is sold or exchanged because of value derived or because of oldness as respects the present age, and not simply because same is not a new product.

Apartment - A part of a building consisting of a room or rooms intended, designed, or used as a residence by an individual or a single family.

Appeal - an action which permits anyone to arrange for a hearing from other than the individual or group from whose decision the appellant seeks redress.

ARS - Arizona Revised Statutes (Arizona State Law).

Artist - One who practices the fine arts in which imagination and taste presides over the execution, including painting, drawing, sculpture, poetry, music, dancing, and dramatic art. This is not deemed to include the business of teaching the mechanics of the art.

Attached building - (see Building, Attached).

Automobile Sales – Storage and display for sale of more than two motor vehicles or any type of trailer provided the trailer is unoccupied, and where repair or body work is incidental to the operation of the new or used vehicle sales.

Automobile Service Station – Any building, structure, or land used primarily for the dispersal, sale, or offering for sale of automotive fuels, oils or accessories, including lubrication of automobiles and replacement or installation of minor parts and accessories, but not including major repair work such as motor replacement or rebuilding, body and fender repair or painting.

Automobile Repair Services Establishment – Any building, structure, improvements, or land used for the repair and maintenance of automobiles, motorcycles, trucks, trailers, or similar vehicles, including but not limited to body, fender, muffler, or upholstery work, oil change and lubrication, painting, tire service and sales, or installation of radios, car alarms, or stereo equipment. Does not include private garages used for the storage or maintenance of the owner or occupants' automobile.

Automobile Wrecking Yard – The dismantling or wrecking of used motor vehicles or trailers, or the storage, sale, or dumping of dismantled or wrecked vehicles or their parts.

Bed and breakfast - a building or buildings containing central kitchen facilities and not more than three (3) rooms used to provide lodging for compensation; provided that the owner or caretaker lives on the premises, smoke alarms are installed and parking has no negative effect on the neighborhood.

Beekeeping and Associated Definitions

Apiary – A place where bee colonies are kept.

Beekeeper – a person who owns and/or breeds bees, especially for their honey.

Beekeeping (or apiculture) – the maintenance of bee colonies, commonly in man-made hives by humans. May include the manufacture of honey, beeswax, and other byproducts of the beekeeping process.

Colony – the inhabitants of the hive, including the queen, drones, worker bees and brood.

Flyway barrier – a solid wall, fence, dense vegetation, or combination of these materials at least six (6) feet high that extends at least ten (10) feet beyond the hives on each end of a bee colony.

Block - An area of land within a subdivision that is entirely bounded on all sides by streets and/or exterior boundary or boundaries of a subdivision.

Board of Adjustment - (see Section 106)

Boundary, Zone - the limit and extent of each zone district classification as shown on the official zoning map.

Building - a structure having a roof supported by columns or walls (see Structure).

Building, Attached - a building which has at least part of a wall in common with another building, or which is connected to another building by a roof.

Building, Detached - a building which is separated from another building or buildings on the same lot.

Building, Height of - the vertical measurement down from the highest point on the structure to an intersection with the horizontal projection of a plane established as the median between the highest and lowest points of original grade beneath the enclosed portion of the structure. (See Appendix for diagrams.)

Building, Principal - a building, or buildings, in which is conducted the principal use of the lot on which it is situated. In any residential district, any dwelling shall be deemed to be the main building of the lot on which the same is situated.

Building Area - the total areas, taken on a horizontal plane at the mean grade level, of the principal buildings and all accessory buildings, exclusive of decks, uncovered porches, terraces, and steps.

Building Permit – An official document or certification that is issued by the building official and which authorizes the construction, alteration, enlargement, conversion, reconstruction, remodeling, rehabilitation, erection, demolition, moving, or repair of a building or structure.

Building Inspector – A governmental employee charged with enforcement of the building code, and such other ordinances as may be assigned to their department.

Building Scale – The perceived relative height and bulk of a building to that of neighboring buildings.

Building Setback - the minimum distance as prescribed by this ordinance between any property line and the closest point of the foundation or any supporting post or pillar of any building or structure related thereto.

Building Site – Land occupied or intended to be occupied by a building or interrelated buildings, together with all open space required by this ordinance, which is located on a lot that has been lawfully created and meets all criteria of this ordinance for the intended use. Does not include any streets, alleys, access easements or other rights-of-way necessary for access to the property, or as a means of access through one property to another parcel of land.

Business Day – Any day that Town Hall is open for the conduct of regular business, excluding Saturdays, Sundays, holidays, and other days on which Town offices are officially closed. Holidays are those recognized by the Town of Jerome.

Business or Commerce - The purchase, sale or other transaction involving the handling or disposition (other than defined in the term “industry”) of any article, substance or commodity for livelihood or profit, including in addition, operation, or provision of any service or service establishment, office building, outdoor advertising sign or structure, recreational or amusement enterprise conducted for livelihood or profit.

Calendar Day – Every day shown on a calendar, including Saturdays, Sundays, and holidays

Campground - any lot, parcel, or tract of land used, designed, maintained, and intended for rent of plots or sites to accommodate temporary camping by the travelling public with or without sanitary facilities and water, whether or not a charge is made for the use of the park and its facilities.

Caretaker, Property – Any person who resides on the property and who performs maintenance or repair services on a regular basis.

Caretaker’s Residence – A single-family dwelling unit accessory to an agricultural, professional, commercial, or industrial use for occupancy by the property caretaker.

Cargo Container – A standardized, reusable vessel that is or appears to be: (1) originally, specifically or formerly designed for or used in the packing, shipping, movement or transportation of freight, articles, goods, or commodities, or (2) designed for or capable of being mounted or moved on a rail car, or (3) designed for or capable of being mounted on a chassis or bogie for movement by truck trailer or loaded on a ship.

Carport - an accessory structure or portion of a main structure open on one (1) or more sides designed for the storage of motor vehicles, without full enclosure.

Cemetery - land used or intended to be used for the burial of the dead, and dedicated for such purposes, including columbariums, crematoriums, mausoleums, and mortuaries when operated in conjunction with and within the boundaries of such premises.

Child Care Center – A facility other than a private residence that provides care, supervision, education, instruction, developmental activities, or a combination thereof for minor children for periods of less than 24 hours per day. The facility is generally described as child care center, day care center, day nursery, nursery school, parent cooperative pre-school, play group, or drop-in center. "Child care center" or "day care center" does not include a Sunday school conducted by a religious organization where children are cared for during short periods of time while persons responsible for such services are attending religious activities.

Child Day Care Home – A private residence in which more than six but not more than 12 minor children are given care and supervision for periods of less than 24 hours a day, unattended by a parent or legal guardian, except children for whom the provider is a parent, stepparent, guardian, custodian, or other relative.

Church – A building wherein persons regularly assemble for religious worship and which is maintained and controlled by a religious body organized to sustain a public worship, together with all accessory buildings and uses customarily associated with such primary purpose.

Circulation Plan - That portion of the General Plan adopted by the Planning and Zoning Commission and Town Council designating and defining the physical street system for Jerome, Arizona.

Clinic – A facility providing medical, psychiatric, or surgical service for sick or injured persons exclusively on an outpatient basis, including emergency treatment, diagnostic services, training, administration, and services to outpatients, employees, or visitors.

Club – Buildings and facilities, owned or operated by a corporation, association, person or persons, for a social, educational, or recreational purpose, to which membership is required for participation and not primarily operated for profit nor to render a service that is customarily carried on as a business.

Clubhouse – A building to house a club or social organization not conducted for private profit, as documented by state or federal records, and which not an adjunct to or operated by or in connection with a public tavern, café, or other public place.

Commission - Town of Jerome Planning and Zoning Commission. (See Section 105.)

Common Area – Land in a development held in common or single ownership and not reserved for the exclusive use or benefit of an individual tenant or owner.

Conditional Approval – An affirmative action by a commission or council indicating that approval will be contingent upon satisfaction of certain specified stipulations.

Contiguous – In contact, adjoining, or touching another object or item, as distinguished from being adjacent.

Convalescent Home - (same as Nursing Home).

Cooking Facility – An area containing facilities for the storage, cooking, or preparation of food, that is accessory to a principal use. A cooking facility may be located in an enclosed or unenclosed area. Specifically includes a sink, refrigerator, stove, and oven, but not microwaves, hotplates, or other similar appliances.

Cornice – Any horizontal member, structural or nonstructural, of any building, projecting outward from the exterior walls at the roof line, including eaves and other roof overhang.

Council - Jerome Town Council.

Court – An open, unoccupied space, other than a yard, on the same lot with a building or group of buildings, which is bounded on two or more sides by such building or buildings.

County - Yavapai County, State of Arizona.

Covenant, Protective – A contract entered into between private parties which constitutes a restriction on the use of a particular parcel of property.

Cultural Resources – Those resources that possess qualities of significance in national, state, or local history, architecture, archaeology, and culture and which are present in districts, sites, structures, and objects that possess integrity of location, design, setting, materials, workmanship, and association.

Cupola – A small dome and the shaft that supports it; sits on top of a building.

Dancehall – A place of assembly, open to the public and operated for profit, where dances, parties, receptions, and other gatherings are held. Dance halls may provide live entertainment, may serve alcoholic beverages, and may serve catered meals provided the owner or operator holds the appropriate licenses and permits.

Day Care - (see Child Care Center).

Dead-End Street - A street or road having a traffic outlet on one end only. A dead-end street may or may not have temporary provisions for the turning around of vehicular traffic.

Deck – A roofless outdoor space built as a platform structure at least twelve (12) inches above ground, projecting from the wall of a building, and connected by structural supports at grade or by the building structure.

Dormer – A window vertical in a roof or the roofed structure containing such a window.

Drive-In Theater - an open air theater where the performance is viewed by all, or part, of the audience from motor vehicles.

Drive-Through Establishment - A business establishment so developed that its retail or service character is dependent on providing a driveway approach or parking spaces for motor vehicles so as to serve patrons while in the motor vehicle rather than within a building or structure. (For restaurants, see Restaurant, Fast Food.)

Driveway – A private roadway providing access for vehicles to a parking space, garage, dwelling, or other structure.

Dump – (See Landfill)

Dwelling - A building or portion thereof designed or used primarily as living quarters for one or more families, but not including fraternity and sorority houses, nursing homes, hotels, motor lodges, or other accommodations for the transient public.

Dwelling, Single-Family - a detached building designed exclusively for occupancy by or occupied by one (1) family for residential purposes.

Dwelling, Duplex – A building designed as a single structure, containing two separate living units, each of which is designed to be occupied as a separate permanent residence for one family.

Dwelling, Triplex – A building designed as a single structure, containing three separate living and housekeeping units, each of which is designed to be occupied as a separate permanent residence for one family.

Dwelling, Quadplex - A building designed as a single structure, containing four separate living and housekeeping units, each of which is designed to be occupied as a separate permanent residence for one family.

Dwelling, Live/Work - a dwelling unit combining residential use types with limited nonresidential-use types.

Dwelling (Home), Manufactured – A factory-built, single-family structure that is manufactured under the authority of the National Manufactured Home Construction and Safety Standards Act, is transportable in one or more sections, is built on a permanent chassis, and is used as a place of human habitation; but which is not constructed with a permanent hitch or other device allowing transport of the unit other than for the purpose of delivery to a permanent site, and which does not have wheels or axles permanently attached to its body or frame.

Dwelling, Modular - a dwelling unit or habitable room thereof which is either wholly or insubstantial part manufactured at an off-site location to be assembled on site, except that it does not include a mobile home as defined in this article.

Dwelling, Multi-Family - a building designed exclusively for occupancy by or occupied by five (5) or more families living independently of each other (i.e., five plex or apartment).

Dwelling Unit – A portion of a building designated as the residence of a one family or individual with suitable approved provisions for eating, sleeping, cooking, and sanitation.

Easement – Shall mean any recorded interest in land owned by another for a specific (limited) use (i.e., access)

Eave – The projecting lower edges of a roof overhanging the wall of a building.

Electric Transmission Line - An electric line used for the bulk transmission of electricity between generating or receiving points and major substations or delivery points and having a rating of over twelve thousand (12,000) volts.

Eminent Domain – The authority of a government to take, or to authorize the taking of, private property for public use.

Erect – The acts of building, constructing, altering, reconstructing, moving a structure upon, or any physical operations on the premises which are for construction. Excavation, fill, drainage, material storage, hauling, and the like shall be considered a part of erection.

Essential Services -Services provided by public and private utilities, necessary for the exercise of the principal use or service of the principal structure. These services include underground, surface, or overhead gas, electrical, steam, water, sanitary sewerage, stormwater drainage, and communication systems and accessories thereto, such as poles, towers, wires, mains, drains, vaults, culverts, laterals, sewers, pipes, catch basins, water storage tanks, conduits, cables, fire alarm boxes, police call boxes, traffic signals, pumps, lift stations, and hydrants, but not including buildings used or intended to be used for human habitation.

Façade – The exterior side of a building which faces, and is most nearly parallel to, a public or private street. The façade shall include the entire building walls, including wall faces, parapets, fascia, windows, doors, canopies, and visible roof structures of one complete elevation.

Factory-Built Building – A residential or nonresidential building, including a dwelling unit or habitable room thereof, which is either wholly or in substantial part manufactured at an off-site location to be assembled on-site, except that it does not include a manufactured home, recreational vehicle, or mobile home.

Family - an individual, or two (2) or more persons related by blood or marriage, or a group of persons not related by blood or marriage, living together as a single housekeeping group in a dwelling unit.

Farm – Any land or buildings or structures on or in which agriculture and farming operations are carried on and shall include the residence or residences of owners, occupants, or employees located on such land.

Farming - land used or cultivated which is intended only as a supplementary source of income or livelihood.

Fence – An artificially constructed barrier of wood, masonry, stone, wire, metal, or other manufactured material or combination of materials erected to enclose, screen, or separate areas.

Final Plat - the final drawing of a property being subdivided as prepared by a land surveyor or engineer for recording and approval by the Planning and Zoning Commission and the Town Council.

Floodplain - the areas adjoining the channel of a watercourse, or areas where drainage is or may be restricted by man-made structures which have been or may be covered partially or wholly by floodwater, but shall compose an area not less than that area confined by the fifty-year flood and shall not exceed that area confined by the one hundred-year flood.

Floor Area Ratio (FAR) – The ratio of gross building floor area to the net lot area of the building site.

Frontage - the linear distance of property along a public right of way.

Garage, Private - an accessory building or a main building or portion thereof, used for the shelter or storage of self-propelled vehicles, owned or operated by the occupants of a main building wherein there is no service or storage for compensation.

Garage, Public - any building, except one herein defined as a private or storage garage used for the storage, care or repair or self-propelled vehicles or where any such vehicles are equipped for operation or kept for hire.

Garage, Repair - (see Automobile Repair Service Establishment).

General Plan - a plan developed and adopted by the planning and zoning commission and town council as a guide for future growth and development within the Town of Jerome, including any other plan adopted as a part or any amendments to such plan or parts thereof.

Governmental Agency - includes any agency of the federal, state, county or municipal governments.

Greenhouse - a building or structure constructed chiefly of glass, glass like translucent material, cloth or lath, which is devoted to the protection or cultivation of flowers or other tender plants.

Greenhouse, Industrial – Wholesale business whose principal activity is the growing and selling of plants within an enclosed building.

Guest House – (See Accessory Dwelling Unit)

Guest Room – One or more rooms intended as one occupancy overnight (or longer) by other than a member of the family. If such contains cooking facilities, it is deemed a dwelling unit. Does not include dormitories for sleeping purposes.

Half Street - A street having on a portion, usually one half (1/2), of its required right-of-way width dedicated for public use.

Hardship – A restriction on property so unreasonable that it results in an arbitrary and capricious interference with basic property rights. Hardship relates to the physical characteristics of the property, not the personal circumstances of the owner or user, and the property is rendered unusable without the granting of a variance.

Hedge – A row of closely planted shrubs, bushes, or any kind of plant forming a boundary or fence.

Height, Building or Structure - (see Building, Height of, and Accessory Building, Height of).

Hives – the domicile of bees, including any receptacles or containers inhabited by bees.

Hillside – Land that has an average percent of slope equal to or exceeding 15 percent.

Historic District – A district or zone designated by a local authority or state or federal government within which buildings, structures, appurtenances, and places are of basic and vital importance because of their association with history; or because of their unique architectural style and scale, including color, proportion, form, and architectural detail; or because of their being a part of or related to a square, park, or area the design or general arrangement of which should be preserved or developed according to a fixed plan based on cultural, historical, or architectural motives or purposes.

Historic Preservation – The preservation of historically significant structures and neighborhoods until such time as, and in order to facilitate, restoration and rehabilitation of the building(s) to a former condition.

Historic Preservation/Design Review Board – (see Sections 107 and 304)

Historic Resource, Contributing – A resource in a registered historic district or historic complex supporting the district's or complex's historical significance through location, design, setting, materials, workmanship, feeling, and association.

Historic Resource, Noncontributing – A building, site, structure, or object that does not add to the historic architectural qualities, historic association, or cultural values of the area because it was not present during the period of significance or does not relate to the documented significance of the property due to alterations, disturbances, additions, or other changes, or because it no longer possesses historic integrity nor is capable of yielding important information about the period.

Historic Resources Survey – A comprehensive survey involving the identification, research, and documentation of buildings, sites, and structures of any historical, cultural, archaeological, or architectural importance.

Historic Structure – Any structure that is: (a) listed individually in the National Register of Historic Places (a listing maintained by the Department of Interior) or preliminarily determined by the Secretary of the Interior as meeting the requirements for individual listing on the National Register; (b) certified or preliminarily determined by the Secretary of the Interior as contributing to the

historical significance of a registered historic district or a district preliminarily determined by the Secretary to qualify as a registered historic district; (c) individually listed on the Arizona Register of Historic Places; or (d) individually listed on a local inventory of historic places in communities with historic preservation programs that have been certified by the Arizona State Historic Preservation Office (SHPO).

Home Occupation - an occupation, profession, activity or use that is clearly a customary, incidental and secondary use of a residential dwelling unit and which does not alter the exterior of the property or affect the residential character of the neighborhood.

Horticulture – The use of land for the growing or production for income of fruits, vegetables, flowers, nursery stock, including ornamental plants and trees, and cultured sod.

Hospital – An institution, licensed by the state department of health, providing primary health services and medical or surgical care to persons, primarily inpatients, suffering from illness, disease, injury, deformity, and other abnormal physical or mental conditions, and including as an integral part of the institution, related facilities such as laboratories, outpatient facilities, or training facilities. The term shall include sanitariums, preventoriums, and maternity homes.

Hotel – An establishment providing, for a fee, sleeping accommodations and customary lodging services, including maid service, the furnishing and upkeep of furniture and bed linens, and telephone and desk service. Related ancillary uses may include, but shall not be limited to, conference and meeting rooms, restaurants, bars, and recreational facilities.

Impervious surface – Any hard-surfaced, man-made area that does not readily absorb or retain water, including but not limited to building roofs, parking and driveway areas, graveled areas, sidewalks, and paved recreation areas.

Industry, Heavy – Manufacturing or other enterprises with significant external effects, or which pose significant risks due to the involvement of explosives, radioactive materials, poisons, pesticides, herbicides, or other hazardous materials in the manufacturing or other process.

Industry, Light – Manufacturing or other enterprise which assembles, improves, treats, compounds, or packages goods or materials in a manner which does not create a noticeable amount of noise, dust, odor, smoke, glare or vibration outside of the building in which the activity takes place, which does not require extensive outside storage of goods or materials, and which does not generate objectionable amounts of truck traffic.

Infill Development - Development or redevelopment of land that has been bypassed, remained vacant, and/or is underused as a result of the continuing urban development process. Generally, the areas and/or sites are not particularly of prime quality; however, they are usually served by or are readily accessible to existing infrastructure (services and facilities). Use of such lands for new housing and/or other urban development is considered a more desirable alternative than to continue to extend the outer development pattern laterally and horizontally, thus necessitating a higher expenditure for capital improvements than would be required for infill development.

Ingress – Access or entry point or entrance.

Intensification of Use – To alter the character of a use to the extent that the use generates new or different impacts on the health, safety, or welfare of the surrounding neighborhood, including but not limited to the level or amount of traffic, noise, light, smoke, odor, vibration, outside storage, or other similar conditions associated with the use.

Intensity – A relative measure of development impact as defined by characteristics such as the number of dwelling units per acre, the amount of traffic generated, and the amount of site coverage.

Irrigated – Watered by an artificial or controlled means, including but not limited to sprinklers, furrows, ditches, or spreader dikes.

Junk Yard - the use of two hundred (200) or more square feet of any lot or parcel of land for outside storage of any used or secondhand materials, including but not limited to lumber, auto parts, household appliances, pipe, drums, machinery or furniture. The outside storage of used or secondhand materials in an area less than two hundred (200) square feet is permitted only on the rear half of a lot or parcel.

Kitchen - any room in a building containing facilities which are used or intended to be used for storage, cooking, and preparation of food, specifically a sink, refrigerator, stove, and oven.

Kindergarten - same as nursery school, except when operated in conjunction with a school of general instruction and having accredited instruction.

Laundry, Self Help - a building in which domestic type washing machines and/or dryers are provided on a rental basis for use by individuals doing their laundry.

Land - any lot or parcel, developed or undeveloped, and capable of being located, surveyed, staked and described by a legal description

Land split - A division of land whose area is two and one-half acres or less into two or three tracts or parcels of land or lots for the purpose of sale or lease.

Land Surveyor – A person registered in the state in the field of land surveying.

Land Trust – A private, nonprofit conservation organization formed to protect natural resources such as productive farm and forest land, natural areas, historic structures, and recreational areas. Land trusts purchase and accept donations of conservation easements. They educate the public about the need to conserve land, and some provide land-use and estate planning services to local governments and individual citizens.

Landscape Plan – A plan associated with a subdivision or development plan that indicates the placement of landscape materials, including specifications, species, quantities, and method of installation.

Light Pollution – Any adverse effect of man-made light.

Light Trespass – Light spill falling over property lines that illuminates adjacent grounds or buildings in an objectionable manner.

Live Entertainment – Any musical act (not including karaoke), theatrical act (including stand-up comedy), play, revue, scene, dance act, or song and dance act, or any combination thereof, performed by one or more persons, whether or not they are compensated for the performance, in a privately owned premises that is open to the public, whether or not admission is charged. Activities, such as but not limited to, billiards tables, dart boards, shuffleboards, tabletop games, card games, arcade-style games, and similar patron amenities, are not considered live entertainment provided they are not conducted as organized tournaments or other activities intended to attract patrons primarily for entertainment purposes. The presence of such incidental recreational amenities shall not, by itself, constitute entertainment requiring a Conditional Use Permit.

Live/Work Space – Areas within buildings that are jointly used for commercial/industrial and residential purposes where the residential use of the space is clearly secondary or accessory to the primary use as a place of work.

Loading, Off-Street – An unobstructed area provided and maintained for the temporary parking of trucks and other motor vehicles for the purpose of loading and unloading goods, wares, materials, and merchandise.

Lot – A parcel of land occupied or intended for occupancy by a use permitted in this chapter, including one main building, together with any accessory buildings, open spaces, and parking spaces required by this chapter and having its principal frontage upon a street, officially approved place, or legally recorded easement.

Lot Area - the total horizontal area within the lot lines of a lot.

Lot, Corner – A lot located at the intersection of two or more streets.

Lot Coverage – A measure of intensity of land use that represents the portion of a site that is impervious, This portion includes but is not limited to all areas covered by buildings, parked structures, driveways, roads, sidewalks, and any area of concrete asphalt.

Lot Depth – The horizontal distance from the midpoint of the front-lot line to the midpoint of the rear-lot line, or to the rear most point of the lot where there is no rear-lot line.

Lot, Double Frontage – A lot having frontage on two parallel or approximately parallel streets. For the purposes of this definition, a lot which has been denied access to one of the parallel or approximately parallel streets shall not be deemed a double frontage lot.

Lot Line – A line dividing one lot from another or from a street or any public place.

Lot Line, Rear - a lot line which is opposite and most distant from the front lot line.

Lot Line, Side – Any lot line not considered a front or rear lot line.

Lot of Record - a lot which is part of a subdivision, the map of which has been recorded in the Yavapai county recorder's office; or parcel of land, the deed of which is recorded in the office of the county recorder.

Lot Split – The division or redivision of a tract or parcel of land into two lots, building sites, or other divisions for the purpose, whether immediate or future, of sale, legacy, or building development.

Manufacturing – The mechanical or chemical transformation of materials or substances into new products, including the assembling of component parts, the creation of products, and the blending of materials including but not limited to oils, plastics, resins, etc. Includes light or heavy industry.

Marijuana Dispensary – A marijuana dispensary refers to the following: (a) "Nonprofit Medical Marijuana Dispensary" as set forth in The Arizona Medical Marijuana Act, A.R.S. § 36-2801.12; (b) "Dual Licensee" as set forth in The Arizona Smart and Safe Act, A.R.S. § 36-2850.9; (c) "Marijuana Establishment," as set forth in the Arizona Smart and Safe Act, A.R.S. § 36—2850.21(a).

Membership Organization – A group that holds regular meetings and that may, subject to other regulations controlling such uses, maintain dining facilities, serve alcohol, or engage professional entertainment for the enjoyment of dues-paying members and their guests. There are no sleeping facilities.

Mine – An area of land upon which operations to extract valuable mineral deposits or other materials have been conducted, are being conducted, or are planned to be conducted.

Minor Street Plan - A part of the street and traffic circulation plan that is complementary to and interrelated with the General Plan.

Mixed-Use Development – A tract of land or building or structure developed for two or more different uses such as, but not limited to, residential, office, manufacturing, retail, public, or entertainment.

Mixed-Use, Horizontal – A development pattern in which two or more different land uses, such as residential, commercial, office, civic, or recreational, are located on the same site or within the same development area but are arranged side-by-side on separate lots or in separate buildings, rather than vertically within a single structure. The uses function as a cohesive development through shared access, interconnected circulation, coordinated site design, or complementary amenities.

Mixed-Use, Vertical – A development pattern in which two or more different land uses, such as residential, commercial, office, civic, or recreational, are located within a single building.

Mobile Food Unit - A temporary food service establishment that is a vehicle-mounted food service establishment designed to be readily movable.

Mobile Home or Mobile Housing - a movable or portable dwelling over thirty-two (32) feet in length or over eight (8) feet wide, constructed to be towed on its own chassis and designed so as to be installed with or without a permanent foundation for human occupancy as a residence which may include one (1) or more components that can be retracted for towing purposed and subsequently expanded for additional capacity, or two (2) or more units separately towable but dwelling composed of a single unit. Does not include recreational vehicle as defined in this Appendix. The removal of the wheels and running gear shall ***not*** change the meaning of this term. Mobile homes are only those units produced prior to June 15, 1976. Units produced after June 15, 1976, are considered manufactured homes as defined in this Appendix.

National Register of Historic Places – A list maintained by the Secretary of the Interior composed of buildings, sites. Structures, objects, and districts of national, state, or local significance in American history, architecture, archaeology, engineering, and culture.

Natural - the condition of the land, vegetation, rocks, and other surface features which have not been physically disturbed, changed or added to by any action of man or machine.

Natural Resource – Existing natural elements relation to land, water, air, plant, and animal life, including but not limited to soils, geology, topography, surface and subsurface waters. Wetlands, vegetation, and animal habitats.

Newspaper of general circulation – A newspaper that is published or circulated within the Town that is regularly issued for the dissemination of news of a general and public character at stated short intervals of time.

Nonconforming building - (see Section 501).

Nonconforming use - (see Section 501).

Non-Residential Subdivision - The division of a tract of land into parcels for occupancy by non-residential uses and/or structures whether for sale or for building development for leasing and/or renting.

Nuisance – Any thing, condition, or conduct that endangers health and safety, or unreasonably offends the senses, or obstructs the free use and comfortable enjoyment of property, or essentially interferes with the comfortable enjoyment of life.

Nursery – An establishment for the growth, storage, display, and/or sale of plants, shrubs, trees, and materials used in indoor or outdoor planting, conducted within or without an enclosed building.

Nursing Home – A use providing bed care and inpatient services for persons requiring regular medical attention but excluding a facility providing surgical or emergency medical services and excluding a facility providing care for alcoholism, drug addiction, mental disease, or communicable disease.

Office – A room or group of rooms used for conducting the affairs of a business, profession, service industry, or government.

Off-Street Loading Facilities - a site or a portion of a site devoted to the loading or unloading of motor vehicles or trailers, including loading berths, aisles, and access drives. (see Section 510).

Off-Street Parking Facilities - a site or a portion of a site devoted to the off-street parking of motor vehicles including parking spaces, aisles, and access drives. (see Section 510).

Open Area - any area used or intended to be used for parking, recreation, open space, agriculture, landing fields and other similar uses.

Open Space – An area or portion of land, either landscaped or essentially unimproved and which is used to meet human recreational or spatial needs, or to protect water, air, or plant areas.

Open Space, Natural – An area or portion of land maintained in its native condition, often characterized by intact natural landscapes, native vegetation, wildlife habitat, and natural landforms. Allowable activities are limited to passive or low-impact uses such as natural earth walking trails, scientific research, and environmental education.

Original Grade - the condition of the surface of the property at the time of submittal of preliminary site plan with no grading changes made.

Overlay Zoning District – A zoning district to be mapped as an overlay to a use district and which modifies or supplements the regulations of the general district in recognition of distinguishing circumstances such as historic preservation, wellhead protection, floodplain or unit development while maintaining the character and purposes of the general use district area over which it is superimposed.

Parapet – That part of any wall entirely above the roof line.

Park – A public or private area of land, with or without buildings, intended for outdoor active or passive recreational uses.

Parking Area – Any public or private land area designed and used for parking motor vehicles including parking lots, garages, private driveways, and legally designated areas of public streets.

Parking District - a public parking district maintained by the federal, state, county or town government, to special district

Path, Multi-Use – A pathway, which may be paved or unpaved, and is physically separated from motorized vehicular traffic by an open space or barrier and is either within the highway right-of-way or within an independent tract, or easement. Multi-use path activities may include walking, hiking, jogging, horseback riding, bicycling, and roller skating.

Patio - an area, usually paved, that is used for outdoor lounging, dining, and/or recreating that is less than 12 inches above the ground surface. When a structure has a roof or wall enclosure that keeps out the elements, it is not a patio and shall be deemed part of the primary structure for purposes of this Ordinance.

Performance Standard – Zoning regulations that permit uses based on a particular set of standards of operation rather than on particular type of use. Performance standards provide specific criteria limiting noise, air pollution, emissions, odors, vibration, dust, dirt, glare, heat, fire hazards, wastes, traffic impacts, and visual impact of a use.

Permit - A document issued by Jerome, Arizona, granting permission to perform an act or service which is regulated by the Town.

Person – A corporation, company, association, firm, partnership, as well as any individual, state, or political subdivision of a state or agency thereof.

Planning and Zoning Commission - The Planning and Zoning Commission and the Planning Commission of Jerome, Arizona are synonymous.

Plat – A document, prepared by a registered surveyor or engineer, that delineates property lines and shows monuments and other landmarks for the purpose of identifying property.

Playground – A land use designed principally to offer recreation, passive or active, to the public. Also may include a “tot-lot”.

Property Lines - Those lines outlining the boundaries of properties on lots for the purpose of description in sale, lease, building development, or other separate use of property.

Public Building - facilities for conducting public business constructed for various public agencies, including federal, state, county, and town offices and buildings.

Public Hearing - hearings held as required by law.

Public Utility - private or public facilities for distribution of various services, such as water, power, gas, communication, etc., to the public.

Preservation – Means the act or process of applying measures necessary to sustain the existing form, integrity and materials of an historic property. Work, including preliminary measures to protect and stabilize the property, generally focuses upon the ongoing maintenance and repair of historic materials and features rather than extensive replacement and new construction. New exterior additions are not within the scope of this treatment; however, the limited and sensitive upgrading of mechanical, electrical and plumbing systems and other code-required work to make properties functional is appropriate within a preservation project.

Quorum – A majority of the authorized members of a board or commission.

Radial - A line forming right angles with the tangent of any given arc.

Reconstruction - means the act or process of depicting, by means of new construction, the form, features, and detailing of a non-surviving site, landscape, building, structure, or object for the purpose of replicating its appearance at a specific period of time and in its historic location.

Record of Survey – A map prepared by a professional land surveyor that re-establishes survey controls, boundaries, locations of improvements, or the alignment of right-of-ways for recording.

Recreation, Active – Those recreational pursuits which require physical alteration to the area in which they are performed. Such areas are intensively used and include, but are not limited to, playgrounds, ball courts, golf courses, and swimming pools.

Recreational Facilities - include buildings, structures or areas built or developed for purposes of entertaining, exercising or observing various activities participated in either actively or passively by individuals or organized groups.

Recreational Facility, Commercial – Recreational facilities operated as a business and open to the general public for a fee.

Recreational Facility, Private – Clubs or recreation facilities for which a membership charge may be made and which are open only to bona fide members and their guests, such as a gaming, shooting, golf, or tennis club, or other similar activities. A private recreational facility may not be open or available to members of the general public.

Recreation, Passive – Those recreational pursuits which can be carried out with little alteration or disruption to the area in which they are performed. Such uses include but are not limited to hiking and picnicking.

Recreational Vehicle - a vehicular type unit primarily designed as temporary living quarters for recreational, camping or travel use, which either has its own motor power or is mounted on or drawn by another vehicle.

Recreational vehicle park - facilities for the temporary storage, parking and maneuvering of recreational vehicles (motor homes, travel trailers, campers etc.) with adequate roads and stall sites, including sanitary and water facilities. Site locations are provided on a day to day basis. Does not constitute a mobile home or trailer park.

Rehabilitation - means the act or process of making possible an efficient compatible use for a property through repair, alterations and additions while preserving those portions or features that convey its historical, cultural or architectural values.

Replat – The act of platting the lots, parcels, and easements in a recorded subdivision or partition plat to achieve a reconfiguration of the existing subdivision or partition plat or to increase or decrease the number of lots in the subdivision.

Restoration - means the act or process of accurately depicting the form, features and character of a property as it appeared at a particular period of time by means of the removal of features from other periods in its history and reconstruction of missing features from the restoration period. The limited and sensitive upgrading of mechanical, electrical and plumbing systems and other code-required work to make properties functional is appropriate within a restoration project.

Residence - a structure containing a dwelling unit designed for occupancy or occupied by one (1) family living as a single non-profit family housekeeping unit.

Restaurant – Any establishment, however designated, at which food and/or beverage is sold for consumption on the premises to patrons seated within an enclosed building, or elsewhere on the premises.

Restaurant, Drive-In - any establishment where food or beverages are dispensed and may be consumed on the premises, but not within a closed building.

Restaurant, Fast Food – An establishment engaged primarily in the business of preparing food and purveying it on a self-serve or semi-self-serve basis. Customer orders and/or service may be by means of walk-up counter or window designed to accommodate automobile traffic. Consumption may be either on or off the premises.

Retail Sales Establishment – A commercial enterprise that provides goods and/or services directly to the consumer, where such goods are available for immediate purchase and removal from the premises by the purchaser.

Right-of-Way – A strip of land acquired by reservation, dedication, prescription, or condemnation and intended to be occupied by a street, trail, water line, sanitary sewer, and/or other public utilities or facilities.

Roof, Gabled – A roof which slopes from both sides of a ridge.

Roof, Gambrel – A gabled roof with two slopes on each side, the lower steeper than the upper.

Roof, Hipped – A roof with slopes on all four sides, continuous from peak to eaves.

Roof, Mansard – A roof with two slopes on each of four sides, the lower steeper than the upper.

School, Charter – A public school established by a contract with the state board of education, the state board for charter schools, a university under the jurisdiction of the Arizona board of regents, a community college district or a group of community college districts, pursuant to Title 15, Chapter 1, Article 8 of the Arizona Revised Statutes, to provide learning that will improve pupil achievement.

School, **Elementary, Junior High, High** - public and other non-profit institutions conducting regular academic instruction at kindergarten, elementary and secondary levels and offering general academic instruction equivalent to the standards prescribed by the state board of education.

School, Nursery - (See Child Care Center)

School, Trade - schools offering preponderant instruction in the technical, commercial or trade skills, such as real estate schools, business colleges, electronic schools, automotive and aircraft technicians schools and similar commercial establishments operated by a non-governmental organization.

Screen – A structure providing enclosure and a visual barrier between the area enclosed and the adjacent property. A screen may also be nonstructured, consisting of shrubs or other growing materials.

School, Private or Parochial - an institution conducting regular academic instruction at kindergarten, elementary, and secondary levels operated by a non-governmental organization.

Service Establishment – Any establishment whose primary activity is the provision of assistance, as opposed to products, to individuals, business, industry, government, and other enterprises.

Setbacks - (see Yard).

Sewage System, Private – A sewage disposal system that collects, treats, and disposes of sewage independent of any public sewage facilities.

Sewage System, Public – An off-site system for the treatment and disposal of sewage in which sewage is conveyed by interceptor to a publicly operated treatment plant and disposed of through means approved by the State of Arizona.

Shed – A relatively small structure often purchased pre-built or as a kit in pre-fabricated sections. It is not designed to be served by heat, electricity, or plumbing, and does not need to be placed on a permanent foundation. The structure is intended to be used as a storage space or a workshop.

Short-Term Rental – Any individually or collectively owned single-family or one-to-four-family house or dwelling unit or any unit or group of units in a condominium or cooperative that is also a transient public lodging establishment or owner-occupied residential home offered for transient use if the accommodations are not classified for property taxation under A.R.S § 42-12001. Does not include a unit that is used for any nonresidential use, including retail, restaurant, banquet space, event center or another similar use.

Sidewalk - That paved portion of the right-of-way between the curb lines or lateral lines of the roadbed and the boundary line of said right-of-way designed and intended for the movement of and use of pedestrian traffic

Sign - (see Section 509).

Site - a parcel of land, subdivided or unsubdivided, occupied or to be occupied by a use or structure.

Site Plan – A plan, to scale, showing uses and structures proposed for a parcel of land as required by the regulations. May include, but is not limited to, lot lines, streets, building sites, reserved open space, buildings, and major landscape features, both natural and manmade.

Spirituous Liquor Tasting Facility - An establishment promoting the retail sales of vinous, spirituous or malt liquor to consumers, and allowing tasting of those vinous, spirituous or malt liquors on the premises of the tasting facility. A vinous, spirituous or malt liquor tasting facility may include snacks, not meals, to consume with vinous, spirituous or malt liquor as a complement to but not as the primary function of the tasting facility. Vinous, spirituous or malt liquor tasting facilities may not include dining room seating. Vinous, spirituous or malt liquor tasting facilities may have an “Other Food” License for ware washing and appetizer preparation only, not for meal preparation. A

Spirituous Liquor Tasting Facility shall not include establishments with a Series 12 restaurant liquor license.

Stable - a detached accessory structure including, but not limited to, a corral or paddock for the keeping of one or more horses owned by the occupants of the premises and which are not kept for remuneration, hire or sale.

Stable, Commercial - a structure including, but not limited to, a corral or paddock for the keeping of horses for remuneration, hire or sale.

Storm Sewer - A constructed conduit necessary, useful, or convenient for the collection and carrying of surface waters to a drainage course.

Story - that portion of a building included between the surface of any floor and the finished ceiling next above it or the finished under surface of the roof directly over that particular floor.

Street - Any existing or proposed street, avenue, boulevard, road, lane, parkway, place, bridge, viaduct or easement for public or private vehicular access or a street in a plat duly filed and recorded in the County Recorder's office. A street includes all land within the street right-of-way, whether improved or unimproved, and includes such improvements as pavement, shoulders, curbs, gutters, sidewalks, parking spaces, bridges and viaducts.

Street, Arterial - A street or road with the principal function to serve as a part of a major network for the through traffic flow, separate from local traffic, to and from areas of principal tragic generation, of adequate design, capacity and construction to provide for the safe and rapid distribution and collection of through traffic and to provide limited ingress and egress to and from collector and local streets.

Street, Collector - A street or road that serves local traffic movement within an area, and traffic between major arterials and local streets and provides a means of ingress and egress to local streets and abutting property; also serves to connect adjacent neighborhoods and includes the principal entrance streets into residential neighborhoods. There may also be provisions for parking and loading or unloading on collector streets.

Street, Cul-de-sac - A local street of relatively short length with one end open to traffic and the other end permanently terminating in a vehicular turnaround.

Street, Minor - A street or road used primarily for direct access and egress to residential, commercial, and industrial areas and having major service functions of loading, unloading, and direct access and egress to abutting property, and being controlled in such fashion as to discourage through traffic and maintain relatively slow speed. There may also be provisions for parking on minor streets.

Street, Frontage Road - A minor street, parallel to and adjacent to an arterial street, whose primary purpose is providing access to abutting properties.

Street, Stub - A short dead-end street or road, no more than one lot deep in length, formed at the boundaries of a subdivision to provide access to abutting property.

Street Line - the boundary line between street right-of-way and abutting property.

Structure - anything constructed or erected which requires a fixed location on the ground, including a building but not including a fence or wall, unless the wall is part of the building.

Structure, Main - a structure housing the principal use of a site or functioning as the principle use.

Structure Alteration - any change in the supporting members of a building, such as foundations, bearing walls, columns, beams, floor or roof joints, or any change in the exterior dimensions of a building, excepting those changes which may result from providing minor repairs and building maintenance.

Subdivision of Land - (see Arizona Revised Statutes, Section 9-463).

Subdivider - Any individual, firm, association, syndicate, co-partnership, corporation, trust or any other legal entity commencing proceedings under the regulations of Article VII Subdivision Standards, to effect a subdivision of land hereunder for himself or for another.

Subdivision - Improved or unimproved land or lands divided for the purpose of financing sale or lease, whether immediate or future, into four (4) or more lots, tracts, or parcels of land, or, if a new street is involved, any such property which is divided into two (2) or more lots, tracts, or parcels of land, or any such property, the boundaries of which have been fixed by a recorded plat, which is divided into more than two (2) parts. This definition includes land splits. Also includes any condominium, cooperative, community apartment, townhouse or similar project containing four (4) or more parcels, in which an undivided interest in the land is coupled with the right of exclusive occupancy of any unit located thereon, but plats of such projects need not show the buildings or the manner in which the buildings or airspace above the property shown on the plat are to be divided.

Swarming – Swarming is a natural process in the life of a honeybee colony. Swarming occurs when a large group of honeybees leaves an established colony and flies off to establish a new colony. Swarming is a natural method of propagation that occurs in response to crowding within the colony.

Swimming Pool - any above or below-ground structure containing or intended to contain water for recreational uses, including wading pools.

Tentative Plat or Preliminary Plat - That portion of a preliminary plan or any separate drawing of a parcel of land that conforms with the requirements of the subdivision regulations intended for subdivision and approval of the Planning and Zoning Commission.

Town - the Town of Jerome, Yavapai County, Arizona.

Travel Trailer - a vehicle without motive power, portable structure with wheels built on a chassis, designed as a temporary dwelling for travel recreation and vacation purposes, having a body width not exceeding eight (8) feet and its body length does not exceed thirty-two (32) feet.

Trailer Park or Court - facilities for the storage, parking, and maneuvering of mobile homes or trailers with adequate road and stall sites, and providing adequate sanitation and water facilities required to meet the needs of the residents. Site location is provided on a rent or lease basis. Includes mobile home parks.

Tree, Heritage – A designated tree that is unique and important to the cultural landscape of Jerome because of its species, age, size, location, and/or historical significance.

Unapproved Lot or Parcel - A lot or parcel of land that may be legally described on a deed, appear on a recorded or unrecorded map or been assigned a parcel number by the County Recorder but has never been officially approved by any past or present Jerome Town Council.

Use – Any purpose for which a lot, building, or other structure or a tract of land may be designated, arranged, intended, maintained, or occupied; or any activity, occupation, business, or operation carried on or intended to be carried on in a building or other structure or on a tract of land.

Use, Conditional – A use of property that may be permitted only by conditional use permit and which use must comply with all terms and conditions of the permit.

Use, Permitted – A use permitted in a district without the need for special administrative review and approval, upon satisfaction of the standards and requirements of this ordinance.

Variance - (see Arizona Revised Statutes, Section 9-462, and Section 305 of this Ordinance).

Vineyard - is an area of land planted with cultivated grapevines.

Viniculture - is the science, cultivation and study of grapes which deals with the series of events that occur in a vineyard, which vineyard produces grapes specifically for winemaking, whether for commercial, non-commercial or domestic use. The term “viniculture” shall not apply to plantings of one hundred (100) vines or less.

Wall - any structure or device forming a physical barrier which is so constructed that fifty (50) percent or more of the vertical surface is closed preventing the passage of light, air and vision through said surface.

Warehouse - a building or buildings used for the commercial storage of goods, where no retail or wholesale operations are conducted at the site.

Wholesale - the sale of goods or materials for the purposes of resale.

Water System, Community - a water supply system publicly or privately owned having an authorized permit, which serves the needs of the residents.

Yard – An open space at grade between a building and the adjoining lot line, unoccupied or unobstructed by any portion of a structure from the ground upward, except as otherwise provided in this ordinance.

Yard, Front - a yard, the depth of which is the minimum required horizontal distance between the front line and a line parallel thereto on the lot, which yard extends across the full width of the lot.

Yard, Rear - a yard, the depth of which is the minimum required horizontal distance between the rear lot line and a line parallel thereto on the lot, which yard extends across the full width of the lot.

Yard, Side - a yard, the width of which is the minimum required horizontal distance between the side lot line and a line parallel thereto on the lot, not including any portion of required front yard or required rear yard.

Zone - a district classification established by this ordinance which limits or permits various and specific uses.

Zone District - a zone area in which the same zoning regulations apply throughout the district.

Zoning Area – The area within one hundred fifty feet, including all rights-of-way, of the affected property subject to the proposed amendment or change and the area of the proposed amendment or change.

[Ord. No. 374; Ord. No. 408; Ord. No. 442; Ord. No. 446; Ord. No. 454; Ord. No. 465; Ord. No. 470; Ord. No. 474]

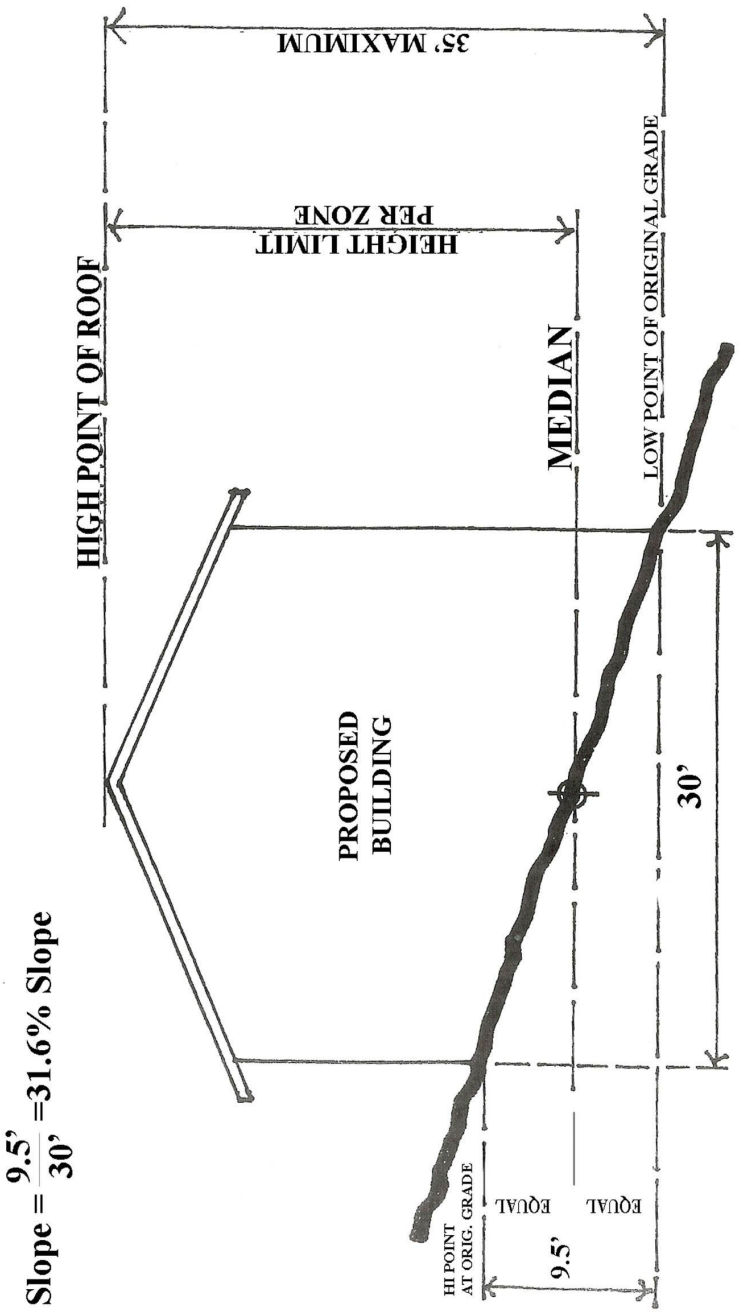

Slope = $\frac{9.5'}{30'}$ =31.6% Slope

(SITE SECTION)

DIAGRAM 1

BB 1.98

SLOPE = $\frac{18'}{40'}$ =45% AVERAGE SLOPE

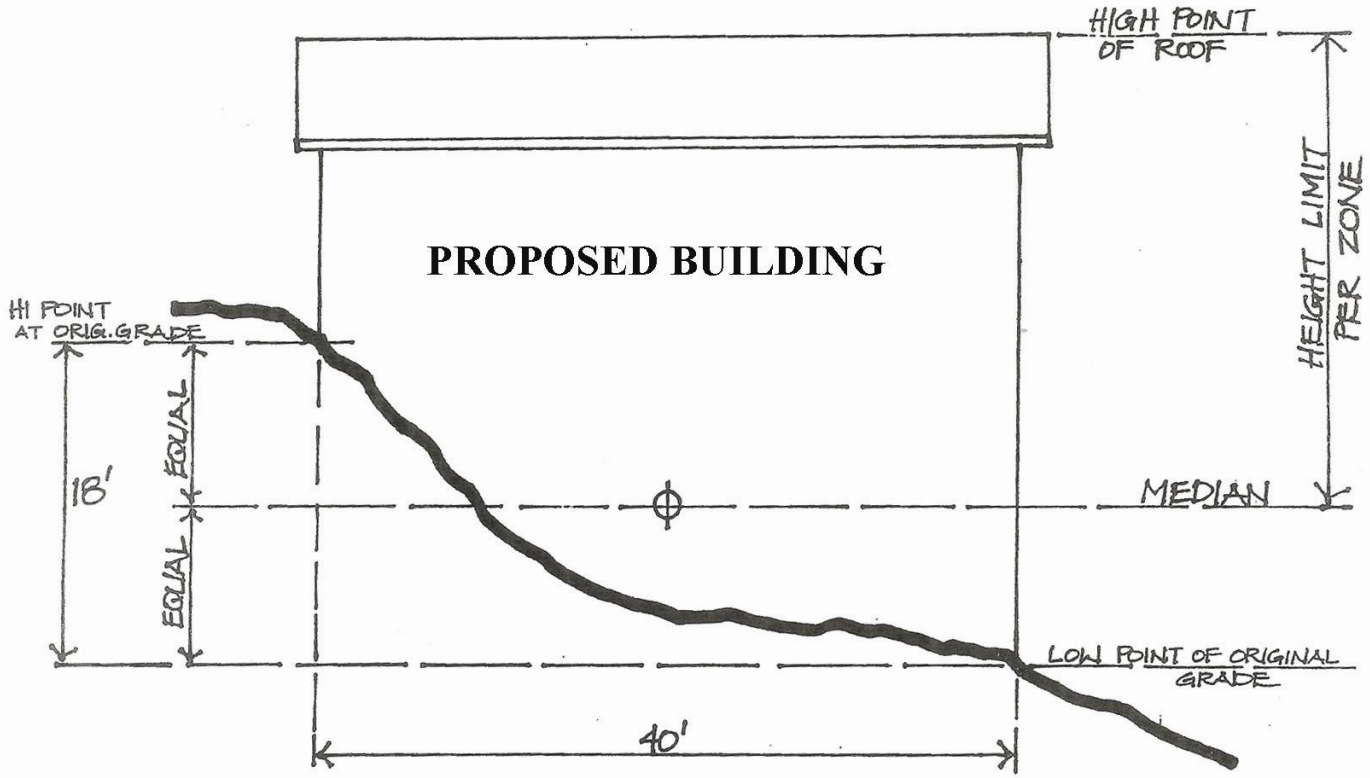

DIAGRAM 2
BB 1-98

(SITE SECTION)

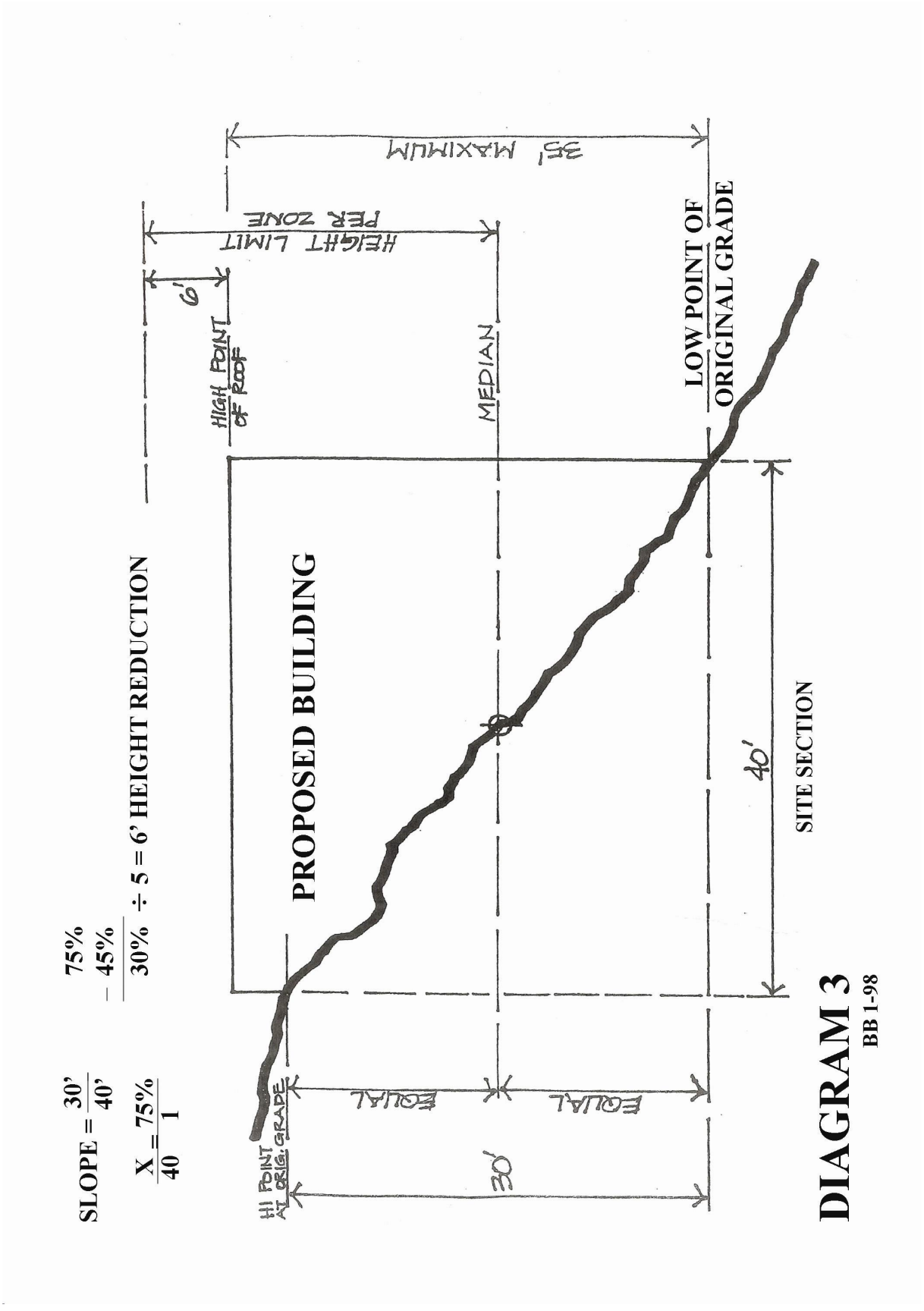
SLOPE = 30'/40'
75%
– 45%
30% ÷ 5 = 6' HEIGHT REDUCTION
X = 75%/40 1
6'
HEIGHT LIMIT PER ZONE
35' MAXIMUM
HIGH POINT OF ROOF
MEDIAN
LOW POINT OF ORIGINAL GRADE
PROPOSED BUILDING
HI POINT AT ORIG. GRADE
EQUAL
EQUAL
30'
40'
SITE SECTION
DIAGRAM 3
BB 1-98

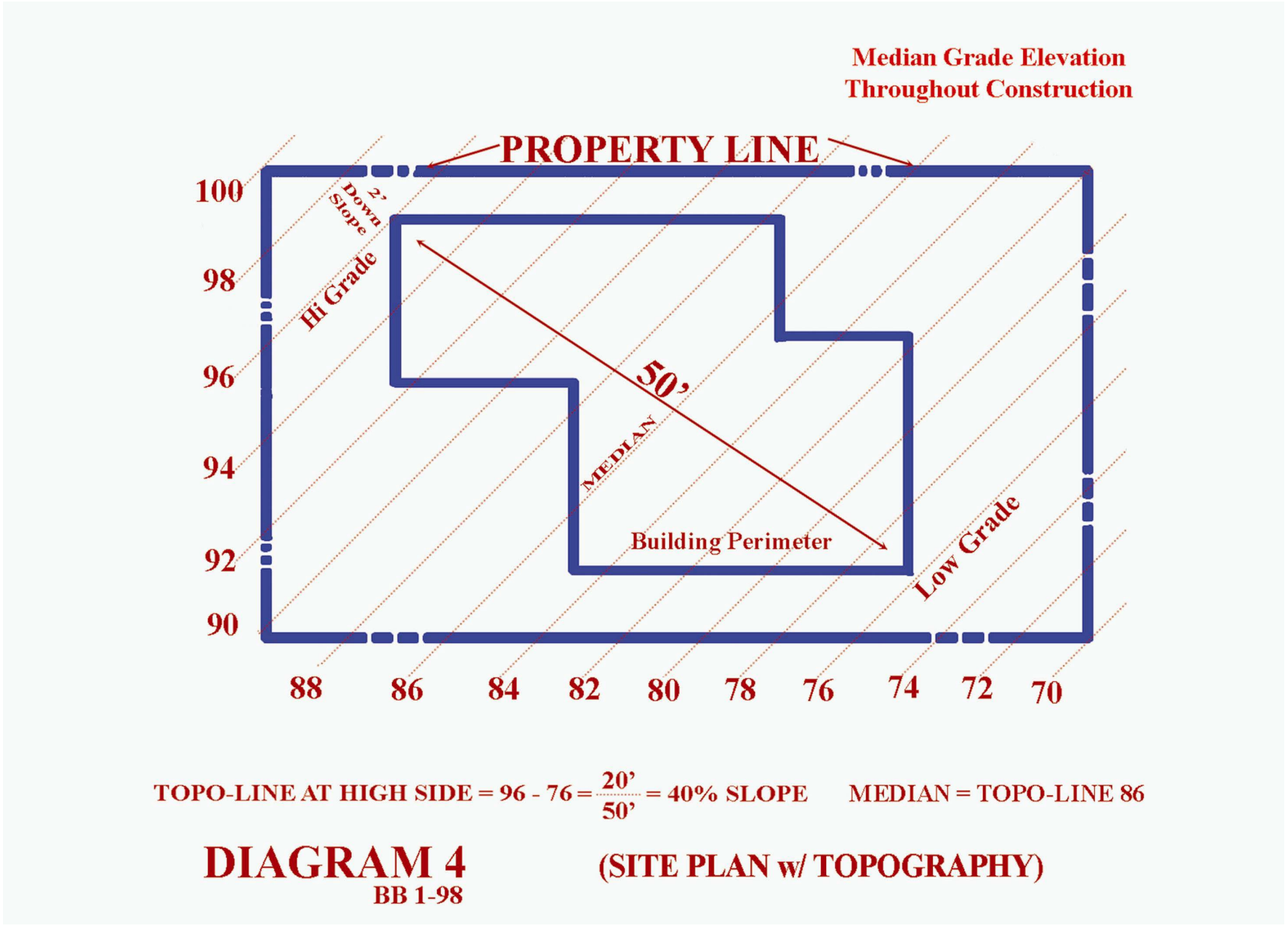
Median Grade Elevation
Throughout Construction
PROPERTY LINE
100
98
96
94
92
90
2' Down Slope
Hi Grade
50'
MEDIAN
Building Perimeter
Low Grade
88
86
84
82
80
78
76
74
72
70
TOPO-LINE AT HIGH SIDE = 96 - 76 = 20'/50' = 40% SLOPE
MEDIAN = TOPO-LINE 86
DIAGRAM 4
BB 1-98
(SITE PLAN w/ TOPOGRAPHY)

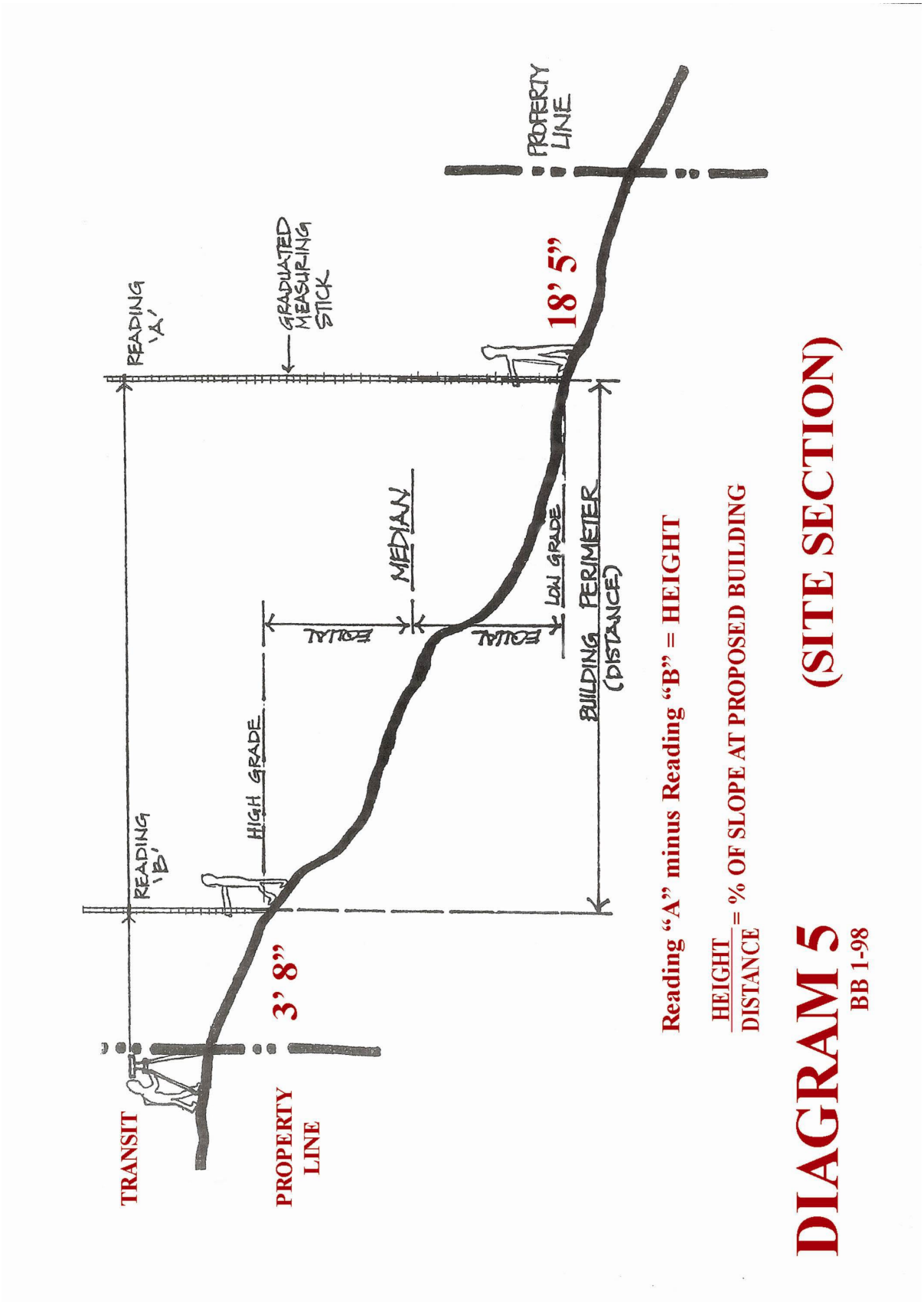
TRANSIT
PROPERTY LINE
3' 8"
READING 'B'
HIGH GRADE
EQUAL
MEDIAN
EQUAL
LOW GRADE
BUILDING PERIMETER (DISTANCE)
READING 'A'
GRADUATED MEASURING STICK
18' 5"
PROPERTY LINE
Reading "A" minus Reading "B" = HEIGHT
HEIGHT / DISTANCE = % OF SLOPE AT PROPOSED BUILDING
DIAGRAM 5
BB 1-98
(SITE SECTION)

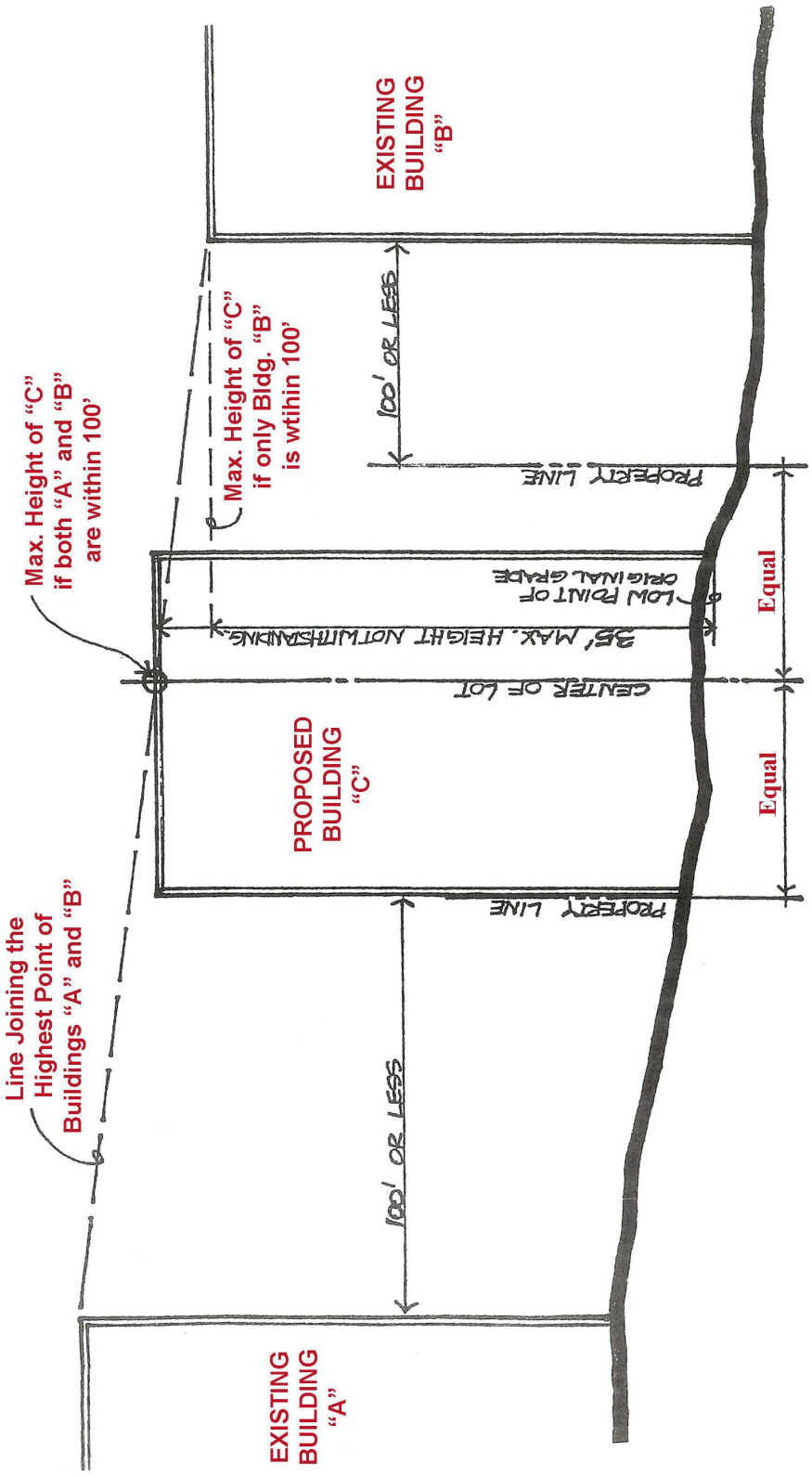

DIAGRAM AT C-1 ZONE ONLY

Elevation View

BB '98

File Attachments for Item:

B. Consider Proposal from Southwestern Environmental Consultants, Inc., for the Development Design of ADA Accessible Features at the Middle Park

Council will consider and may approve the proposal.

SOUTHWESTERN
ENVIRONMENTAL
CONSULTANTS, INC.

www.sec-landmgt.com
info@sec-landmgt.com

825 COVE PARKWAY
COTTONWOOD, ARIZONA 86326
(928) 634-5889
Fax: 634-2222

October 27, 2026

Brett Klein
Town Manager / Clerk
Town of Jerome
600 Clark Street
P.O. Box 335
Jerome, AZ 86331

RE Town of Jerome, Mid Park Handicap Parking Design

Dear Brett,

SEC is pleased to provide a proposal from review and design on design handicap ramp at the middle park. SEC propose to provide the following services,

- Gather topography at the upper section of the park.
- Review the drainage patterns
- review and develop concepts for possible locations for handicap ramps.
- Develop final plans
- Develop specifications
- Develop opinion of cost
- Assist the Town with design approvals

The proposal excludes geotechnical, structural or Traffic engineering. Construction staking, post design services or certification are not part of this proposal. Based on our understanding, we propose providing the above services for an estimated cost of $29.690.00. All work will be billed at current Time & Material rates.

If this meets your approval, please sign the attached Work Order and return it to our records. Schedule A & B is for your records. We look forward to working with the Town on this project. Pease feel free to contact me at kginige@sec-landmgt.com or 928-634-5889 if I can be of assistance.

Sincerely,

Krishan Ginige, P.E., MS, CFM
President

SEC, Inc.
825 Cove Parkway, Suite A
Cottonwood, AZ 86326

WORK ORDER

Date Opened 10/27/2026 Date Required ASAP

Project Name TOJ/ Gulch Drainage Project No.

Ordered by Brett Klein - Town Manger/Clerk Email b.klein@jerome.az.gov

Bill to TOJ C/O Brett Klein Phone (928) 634-7943

Street PO Box 335 City Jerome State AZ Zip 86331

Received by Krishan Ginige Office x Letter o Phone o Other o

PROJECT LOCATION Yavapai County Town of Jerome

PROJECT DESCRIPTION TOJ Engineering and Surveying – Mid Park Handicap design

1) Per attached SEC Proposal Letter, dated 10/27/2026, attached hereto and made a part of this Work Order.
2) Any additional requests will be billed as "extra" items at current Time & Materials rates. Prior approval will be obtained before proceeding.

SEC, Inc. agrees to perform the work outlined herein under the terms and conditions set forth in Schedules A and B, attached hereto and made a part hereof. Client agrees to pay an estimated fee of **$ 29.690.00** plus any direct expenses. This is an estimated fee only, based upon information provided to SEC, Inc. by client, and in the event the information is inaccurate, or in the event of unforeseen circumstances, this estimate may change. Estimate may become void if Work Order is not received by **01/27/2027 .**

If additional work is requested during the project agreed to be performed under this agreement, fees will be based on the current SEC, Inc., hourly rate schedule. A retainer is to be remitted with this Work Order in the amount of **$**__. The balance due SEC, Inc., shall be paid upon completion, or in payments during the course of the project. All past due accounts after deducting current payments and credits, shall bear interest at the rate of 1¾ percent per month, compounded, which is an annual percentage rate of 21 percent. Client agrees to pay all costs of collection, including reasonable attorney fees. Liability for errors and omissions in the work is limited to the amount of the fee.

Acknowledgement and authorization:

_____ _____
Client Signature Date

RATE SCHEDULE - SCHEDULE A

Professional Services
(effective October 15, 2025)

The cost of services, provided by SEC, Inc., are determined as basic direct wages times a cost multiplier for overhead expenses. Hourly charges for different disciplines are as follows:

Functions	Hourly Rate ($)
Principal Engineer / Company Officer	225.00
Project Engineer Level II	175.00
Project Engineer Level I / Planner Level VI	145.00
Senior Civil Engineer / Planner Level V	135.00
CE Level IV / Registered Land Surveyor Level II	125.00
CE Level III / Registered Land Survey Level I or / Technician Level V / Planner Level IV	115.00
CE Level II / Survey Chief III / Technician Level IV / Planner Level III	105.00
CE Level I / Survey Chief II / Technician Level III / Planner Level II	95.00
Survey Chief Level I / Technician Level II / Planner Level I	85.00
Technician Level I	75.00
Laborer	65.00
CADD Designer Level II	95.00
CADD Designer Level I	85.00
GIS – Level II	85.00
GIS - Level I	75.00
CADD Drafter	75.00
Secretary / Non-professional Research (min 1 hour)	65.00

See Natural Resource Rate SCHEDULE A, if applicable

Overtime/Expert Witness

Overtime for all disciplines will be charged at the rate of 1.5 times the hourly rate and 2.0 times the hourly rate for Sundays and holidays. Expert Witness will be charged at 2.0 times the hourly rate for that professional.

Equipment and Materials

Vehicles		0.70/mile
Field Materials		Cost plus 20%
Robotic Total Station		$30/hr
GPS Receiver		$35/hr
Special Service(s) & Equipment Rental		Cost plus 20%
Blackline Prints:		0.25/sf (Public 1.00/sf)
Color Prints:	11" x 17"	3.50 each
Mylar:	18” x 24”	7.50 each
	24” x 36”	12.50 each
Xerox Copies, Letter & Legal: single/double sided		0.15/0.20 each
Xerox Copies: 11” x 17” or Color 8½” x 11”		0.75 each
Color Prints/Plots (24” x 36”)		15.00 each
Check Plots		.20¢/sf
CD copy		$20.00 each
Miscellaneous		Cost plus 20%

Note: Above fee schedule rates are subject to change without notice. Equipment and material costs are subject to change without prior notice, to reflect supplier price changes.

On projects that require a field crew(s) to stay out of town, *per diem* expenses (meals, lodging) will be billed on basis of “costs” plus 20%. On all survey jobs, a **minimum** charge of 2 hours at the current rates will be applied to each job for field work.

TERMS AND CONDITIONS OF AGREEMENT
BETWEEN CLIENT AND SEC, INC.

(SCHEDULE B)

1. **AUTHORIZATION TO PROCEED**. Client's signing of this Work Order constitutes authorization for SEC to proceed with the described services and also constitutes acknowledgment and ratification of services previously rendered at Client's request to the extent they fall within the scope of services described on the Work Order.

2. **RETAINER**. Before SEC begins rendering services, Client shall pay a retainer in the amount set forth on the Work Order. As the retainer is depleted, additional funds will be requested to replenish the retainer balance. Any credit balance in retainer will be adjusted in the final invoice and any amounts due to the Client will be refunded at that time.

3. **INVOICES**. SEC will submit invoices to Client from time to time as services are provided. Invoices are due and payable upon receipt. Client shall promptly review invoices and notify SEC of any objection thereto; absent such objection in writing within ten (10) days of the date of the invoice, the invoice shall be deemed proper and acceptable.

4. **FEES**. Fees are based either on an estimate, quote, or on a time and material (T&M) basis as so stated on the Work Order. Rates are based on the current SEC Rate Schedule (Schedule A). Client shall pay the costs of all materials and direct expenses such as fees, permits, bond premiums, title company charges, delivery charges, travel, lodging, subsistence, blueprints and reproductions, and all other charges and expenses related to completion of the project not specifically covered by the terms of this agreement. In the event such reimbursable items are paid directly by SEC, then such charges and expenses will be invoiced to the Client at direct cost plus twenty (20) percent for handling. A minimum charge of two hours at current rates will be assessed to each survey job.

5. **LIMITATION OF FEES**. SEC's fees shall be limited to the amount set forth in the Work Order. SEC's estimate of the total fees is not a guarantee that all the described services can be performed for that amount but represents its good faith estimation of the approximate total fees that will be earned, based on the information available at the time. However, should the estimated fee amount be reached prior to the limit of services under this Agreement, SEC can limit its services to that amount. If all the services described are not completed, SEC shall provide Client with a revised estimate and proceed to completion only upon Client's authorization (either written or verbal).

6. **EXTRAS**. Client shall pay for any additional work agreed to be performed by SEC at the request of Client, in addition to those set forth herein. The additional work will be charged as extras based on the current SEC hourly rate schedule.

7. **PAYMENT**. Payment for invoices tendered by SEC, are net due upon receipt of the invoice. In the event any invoice is not paid within thirty (30) days, it shall commence bearing compound interest. Beginning on the date the invoice was rendered, compound interest will be calculated at the rate 1.75% per month, (twenty-one (21) percent per annum -- or such rates as may be maximum interest permissible under applicable law, -- whichever is lower). Client agrees to pay all accrued interest together with the charges for services rendered. SEC reserves the right to terminate work on the project until any amounts outstanding are paid in full.

8. **TERMINATION**. Either party may terminate this Agreement with or without cause, upon ten (10) working days written notice to the other. In the event any invoice submitted under this Agreement or under any other agreement between Client and SEC, is not paid in full within forty-five (45) days after rendering, Client agrees that SEC shall have the right to consider said default a material breach of this Agreement. Client shall have ten (10) days thereafter in which to cure said default. If said default is not cured by Client, SEC shall have the right, in addition to all other available rights and remedies, to terminate this Agreement even if the default is in payment of an invoice submitted under another agreement, and to terminate all other agreements between Client and SEC. Upon early termination, Client shall then promptly pay SEC for all of the fees and charges for all services rendered and costs incurred by SEC to the effective date of termination.

9. **CLIENT RESPONSIBILITIES**. Client shall cooperate with SEC by providing everything reasonably necessary for SEC to be able to provide its services., including but not limited to, all necessary information concerning the project and Clients requirements including design criteria, necessary access to public and private lands, legal accounting, insurance services required for the project, necessary permits, and approval of governmental authorities and other individuals.

10. **OWNERSHIP OF DOCUMENTS**. All documents prepared by SEC pursuant to this Agreement are prepared specifically for use in connection with this project. Originals of all such documents are and remain the property of SEC. SEC shall furnish Client with sufficient copies of such documents for its purposes at associated costs. All such documents are not intended or represented to be suitable for reuse by the Client or others on extensions of this project or on any other work. The Client may use such documents for other purposes without further compensation to SEC; however, any reuse without written verification or adaptation by SEC for the specific purpose intended will be at the Client's sole risk and without liability or legal exposure to SEC. Client agrees to indemnify and hold harmless SEC from all claims, damage, losses, and expenses, including attorney's fees, arising out of or resulting from the Client's use of the documents for any purpose other than in connection with this project. Any verification or adaptation of the documents by SEC for other purposes will entitle SEC to further compensation as agreed upon between the parties.

11. **CONSTRUCTION COST ESTIMATES**. SEC has no control over actual project construction costs and estimates of such probable costs represent SEC's good faith estimation only of the approximate, probable cost to construct the project, based on the information available at the time. SEC cannot and does not represent or guarantee that actual project construction costs will not vary substantially from its estimate of probable costs.

12. **ARBITRATION AND LEGAL EXPENSES**. Any controversy of claim relating to this Agreement will be settled by arbitration upon the mutual agreement of the parties. Such arbitration shall be conducted in accordance with the rules of the American Arbitration Association in effect at the time of the arbitration, unless the parties mutually agree to conduct such arbitration by a different procedure. Judgment on the award or decision rendered may be entered in any court having jurisdiction over the matter. In the event of any legal action between the parties to enforce any of the terms of this Agreement, the party in whose favor judgment is rendered, shall be paid by the non-successful party, all costs and expenses incurred, including a reasonable attorney's fee.

13. **LIMITATION OF LIABILITY**. SEC's liability to the Client for any cause or combination of causes is, in the aggregate, limited to an amount no greater than the fee earned under this Agreement.

14. **BINDING EFFECT**. The terms and conditions of this Agreement shall inure to the benefit of and be binding upon the parties and their respective heirs, successors, and assigns. This Agreement shall be governed by and construed in accordance with the laws of the State of Arizona. If any of the provisions of this Agreement are declared invalid, such declarations shall not affect the validity of the remainder of this Agreement.

15. **CAPTIONS**. The paragraph captions used in this Agreement are for convenience only; they are not construed as part of this Agreement; and they in no way define, limit or amplify the provision of this Agreement.

File Attachments for Item:

A. Consideration of Opting in to the Most Recent Opioid Settlements, Referred to as, the "Albertsons Settlement" and Authorizing the Mayor and Town Manager / Clerk to Execute All Documents Related to These Settlements

The Council will consider and may approve the opting in and authorization of the Mayor and Town Manager to execute all documents.

TOWN OF JEROME

POST OFFICE BOX 335, JEROME, ARIZONA 86331
(928) 634-7943 FAX (928) 634-0715

Founded 1876
Incorporated 1899

STAFF SUMMARY REPORT

FROM: Brett Klein, Town Manager/Clerk

ITEM: **Item: Consideration of Opting In to the Most Recent Opioid Settlements**

MEETING DATE: November 10, 2026

Summary:

The payouts are based on population, and the Town gets a very small amount <$700 / year. However, the more communities that opt-in, the more the State receives, so 100% cooperation is sought. The settlement funds do go to a good cause as the funds must be earmarked for narcotics prevention and education.

Fiscal Impact:

N/A.

Recommendation:

Staff recommend approval.

EXHIBIT K

Subdivision Participation and Release Form

Governmental Entity:	State:
Authorized Official:	
Address 1:	
Address 2:	
City, State, Zip:	
Phone:	
Email:	

The governmental entity identified above ("*Governmental Entity*"), in order to obtain and in consideration for the benefits provided to the Governmental Entity pursuant to the Settlement Agreement dated August 20, 2026 ("*Albertsons Settlement*"), and acting through the undersigned authorized official, hereby elects to participate in the Albertsons Settlement, release all Released Claims against all Released Entities, and agrees as follows.

1. The Governmental Entity is aware of and has reviewed the Albertsons Settlement, understands that all terms in this Participation and Release Form have the meanings defined therein, and agrees that by executing this Participation and Release Form, the Governmental Entity elects to participate in the Albertsons Settlement and become a Participating Subdivision as provided therein.

2. The Governmental Entity shall promptly, and in any event no later than 14 days after the Reference Date and prior to the filing of the Consent Judgment, dismiss with prejudice any Released Claims that it has filed. With respect to any Released Claims pending in *In re National Prescription Opiate Litigation*, MDL No. 2804, the Governmental Entity authorizes the Plaintiffs' Executive Committee to execute and file on behalf of the Governmental Entity a Stipulation of Dismissal with Prejudice substantially in the form found at [website link to national settlement website to be provided].

3. The Governmental Entity agrees to the terms of the Albertsons Settlement pertaining to Participating Subdivisions as defined therein.

4. By agreeing to the terms of the Albertsons Settlement and becoming a Releasor, the Governmental Entity is entitled to the benefits provided therein, including, if applicable, monetary payments beginning after the Effective Date.

5. The Governmental Entity agrees to use any monies it receives through the Albertsons Settlement solely for the purposes provided therein.

6. The Governmental Entity submits to the jurisdiction of the court in the Governmental Entity's state where the Consent Judgment is filed for purposes limited to that court's role as provided in, and for resolving disputes to the extent provided in, the Albertsons Settlement. The Governmental Entity likewise agrees to arbitrate before the National

Arbitration Panel as provided in, and for resolving disputes to the extent otherwise provided in, the Albertsons Settlement.

7. The Governmental Entity has the right to enforce the Albertsons Settlement as provided therein.

8. The Governmental Entity, as a Participating Subdivision, hereby becomes a Releasor for all purposes in the Albertsons Settlement, including without limitation all provisions of Section X (Release), and along with all departments, agencies, divisions, boards, commissions, districts, instrumentalities of any kind and attorneys, and any person in their official capacity elected or appointed to serve any of the foregoing and any agency, person, or other entity claiming by or through any of the foregoing, and any other entity identified in the definition of Releasor, provides for a release to the fullest extent of its authority. As a Releasor, the Governmental Entity hereby absolutely, unconditionally, and irrevocably covenants not to bring, file, or claim, or to cause, assist or permit to be brought, filed, or claimed, or to otherwise seek to establish liability for any Released Claims against any Released Entity in any forum whatsoever. The releases provided for in the Albertsons Settlement are intended by the Parties to be broad and shall be interpreted so as to give the Released Entities the broadest possible bar against any liability relating in any way to Released Claims and extend to the full extent of the power of the Governmental Entity to release claims. The Albertsons Settlement shall be a complete bar to any Released Claim.

9. The Governmental Entity hereby takes on all rights and obligations of a Participating Subdivision as set forth in the Albertsons Settlement.

10. In connection with the releases provided for in the Albertsons Settlement, each Governmental Entity expressly waives, releases, and forever discharges any and all provisions, rights, and benefits conferred by any law of any state or territory of the United States or other jurisdiction, or principle of common law, which is similar, comparable, or equivalent to § 1542 of the California Civil Code, which reads:

> **General Release; extent.** A general release does not extend to claims that the creditor or releasing party does not know or suspect to exist in his or her favor at the time of executing the release that, if known by him or her would have materially affected his or her settlement with the debtor or released party.

A Releasor may hereafter discover facts other than or different from those which it knows, believes, or assumes to be true with respect to the Released Claims, but each Governmental Entity hereby expressly waives and fully, finally, and forever settles, releases and discharges, upon the Effective Date, any and all Released Claims that may exist as of such date but which Releasors do not know or suspect to exist, whether through ignorance, oversight, error, negligence or through no fault whatsoever, and which, if known, would materially affect the Governmental Entities' decision to participate in the Albertsons Settlement.

11. Nothing herein is intended to modify in any way the terms of the Albertsons Settlement, to which Governmental Entity hereby agrees. To the extent this Participation and Release Form is interpreted differently from the Albertsons Settlement in any respect, the Albertsons Settlement controls.

I have all necessary power and authorization to execute this Participation and Release Form on behalf of the Governmental Entity.

Signature: _____

Name: _____

Title: _____

Date: _____

File Attachments for Item:

C. Consider Removing from the Table and Further Discussion Regarding the Installation of Security Cameras on Public Safety Facilities

Council will remove the item from the table, and may discuss staff's proposal regarding the installation of security cameras and Councilmember Sheffield's proposed ordinance language.

CREATED BY COUNCILMEMBER SHEFFIELD FOR DISCUSSION / REVIEW

TOWN OF JEROME, ARIZONA PROPOSED ORDINANCE — SUBSTANTIVE LIMITS — CLEAN TEXT

ORDINANCE NO. _____

AN ORDINANCE OF THE MAYOR AND COMMON COUNCIL OF THE TOWN OF JEROME, ARIZONA, AMENDING ARTICLE 4-4 OF THE TOWN CODE BY ADDING SECTIONS 4-4-12 THROUGH 4-4-19, ESTABLISHING LIMITS ON THE RETENTION OF, EXTERNAL ACCESS TO, AND CAPABILITIES OF SURVEILLANCE EQUIPMENT; AND ESTABLISHING AN EFFECTIVE DATE.

WHEREAS, the Council has previously adopted Article 4-4 of the Town Code, requiring Council approval before Surveillance Equipment is acquired, installed, or operated; and

WHEREAS, the Council finds that a requirement of prior approval governs who decides and how visibly, but does not by itself govern how long data is kept, who may obtain access to it, or what capabilities the equipment may have; and

WHEREAS, the Council finds that limits on retention, external access, and equipment capability are appropriately established in advance, by ordinance, rather than case by case; and

WHEREAS, the Council intends that nothing in this Ordinance restrict compliance with Arizona's Public Records Law, with any lawful court process, or with any other obligation imposed by state or federal law;

NOW, THEREFORE, BE IT ORDAINED by the Mayor and Common Council of the Town of Jerome, Arizona:

SECTION 1. Article 4-4 of the Town Code is amended by adding Sections 4-4-12 through 4-4-19 to read as follows:

Section 4-4-12 Application

A. Sections 4-4-12 through 4-4-19 apply to all Surveillance Equipment operated by or on behalf of the Town of Jerome, and to all data collected by that equipment, regardless of when the equipment was installed or approved. This includes equipment continuing in operation under Section 4-4-7 without approval under this Article.

B. Sections 4-4-12 through 4-4-19 apply to Surveillance Equipment installed on Town property by another person or governmental entity under Section 4-4-3, and compliance with these Sections shall be a condition of any approval granted under Section 4-4-3.

C. These Sections do not apply to, and cannot apply to, equipment installed by the Arizona Department of Transportation within the right-of-way of a state highway, including State Route 89A.

D. The Town Manager shall designate a custodian responsible for compliance with Sections 4-4-13 and 4-4-14 and for maintaining the log required by Section 4-4-14(D).

Section 4-4-13 Data Retention

A. Data collected by Surveillance Equipment shall be retained for no longer than thirty (30) days from the date of collection and shall be deleted thereafter, subject to and consistent with records retention schedules approved under A.R.S. Title 41, Chapter 1, Article 2. Where an approved retention schedule requires a longer retention period for a category of record, that schedule controls.

B. Subsection (A) does not require deletion of data that is: 1. part of an active law enforcement investigation; 2. subject to a pending criminal or civil proceeding, a pending claim, or litigation that the Town reasonably anticipates; 3. responsive to a pending request under A.R.S. Title 39, Chapter 1; or 4. subject to a preservation obligation imposed by law or by court order.

C. Data retained under Subsection (B) may be retained for as long as necessary for that purpose and shall be deleted when the purpose has concluded, subject to applicable retention schedules.

D. Deletion under this Section shall occur automatically where the equipment or service is capable of automatic deletion. Where it is not, the custodian designated under Section 4-4-12(D) shall cause deletion to occur on a documented schedule.

Section 4-4-14 Limits on External Access and Disclosure

A. No standing, continuous, automated, bulk, or programmatic access to data collected by Surveillance Equipment shall be provided to any person or agency other than the Town of Jerome. This includes any live feed, application programming interface, shared search platform, regional or national data-sharing network, or arrangement permitting an outside party to query Town data without an individual request.

B. Access described in Subsection (A) may be established only by prior approval of the Town Council by majority vote, as a distinct agenda item, and only for a stated term.

C. Disclosure of individual records to an outside agency shall be made upon a written request identifying the requesting agency, the records sought, and the purpose of the request. The request and the Town's response shall be retained by the custodian designated under Section 4-4-12(D).

D. The custodian shall maintain a log of all disclosures made under Subsection (C) and all access arrangements approved under Subsection (B), and shall report that log to the Council no less than annually as a public agenda item. The log shall identify the requesting agency, the date, and the stated purpose, and shall not include the content of any record.

E. Nothing in this Section limits, restricts, or delays: 1. disclosure required by Arizona's Public Records Law, A.R.S. Title 39, Chapter 1; 2. disclosure pursuant to a valid warrant, subpoena, court order, or other lawful process; 3. disclosure in response to a mutual aid request concerning a specific, ongoing emergency; 4. disclosure to or communication with any federal, state, or local agency where such disclosure or communication is required or

protected by state or federal law, including A.R.S. § 11-1051 and 8 U.S.C. § 1373; or 5. the exercise of law-enforcement authority by any agency with jurisdiction within the Town.

F. Where Surveillance Equipment is owned, hosted, or serviced by a third party, the data terms required by Section 4-4-4(D) apply in addition to this Section.

Section 4-4-15 Facial Recognition, Biometric Identification, and Automated Tracking

A. Surveillance Equipment shall not be equipped with, connected to, or used in conjunction with any system or service providing facial recognition, gait recognition, voice identification, or any other automated biometric identification of an individual.

B. Surveillance Equipment shall not be used to conduct automated tracking of an identified individual's movements over time, and shall not be connected to any system or service that performs such tracking.

C. Data collected by Surveillance Equipment shall not be submitted to any third party for facial recognition or biometric identification analysis.

D. For purposes of this Section only, "Surveillance Equipment" includes body-worn cameras, dash-mounted cameras, and equipment excluded from the definition of Surveillance Equipment under Section 4-4-1(B), notwithstanding that exclusion. Nothing in this Subsection subjects equipment excluded under Section 4-4-1(B) to Sections 4-4-13, 4-4-14, 4-4-16, 4-4-17, or 4-4-18.

Section 4-4-16 Automated License Plate Readers — [ALTERNATIVES; SELECT ONE]

[Option A — Prohibition] The Town shall not fund, acquire, lease, install, or operate an automated license plate reader, and shall not approve the installation or operation of an automated license plate reader on Town property under Section 4-4-3. This Section does not prohibit the manual review of recorded images by a person in connection with a specific reported incident.

[Option B — Conditional] An automated license plate reader may be approved under Section 4-4-2 or Section 4-4-3 only as a distinct agenda item stating that the equipment is an automated license plate reader, and only subject to the following conditions: (1) plate data that does not match an active, lawful alert at the time of capture shall be deleted within seventy-two (72) hours; (2) the equipment shall not be connected to any regional, statewide, or national plate-data sharing network; (3) plate data shall not be shared except as permitted by Section 4-4-14; and (4) the operator shall report the number of captures, matches, and disclosures to the Council annually.

Section 4-4-17 Audio

Surveillance Equipment shall not record, transmit, or store audio, and any audio capability present in such equipment shall be disabled. This Section does not apply to body-worn or dash-mounted cameras, which are excluded from the definition of Surveillance Equipment under Section 4-4-1(B).

Section 4-4-18 Notice at Installation Sites

Signage reasonably visible to a person entering the area covered by Surveillance Equipment shall be posted at or near each installation site, stating that the area is monitored or recorded and identifying the Town or other operating entity. Signage shall be reviewed under Section 4-4-6 where the installation is within the Historic Overlay District.

Section 4-4-19 Approval Threshold — [OPTIONAL; SEE COMPANION NOTES]

[Notwithstanding Sections 4-4-2 and 4-4-3, approval of Surveillance Equipment under this Article shall require the affirmative vote of at least four (4) members of the Town Council. If fewer than five seats are filled, or fewer than five members are eligible to vote on the matter, approval shall require the affirmative vote of all members eligible to vote, but in no case fewer than three (3).]

SECTION 2. Severability. The severability provision at Section 4-4-10 of the Town Code applies to the Sections added by this Ordinance.

SECTION 3. Effective Date. This Ordinance shall take effect thirty (30) days after its passage and adoption.

PASSED AND ADOPTED by the Mayor and Common Council of the Town of Jerome, Arizona, this ____ day of _____, 20____.

Mayor Town Clerk

APPROVED AS TO FORM:

Town Attorney

End of clean ordinance text.

TOWN OF JEROME, ARIZONA

PROPOSED ORDINANCE — CLEAN TEXT

Discussion Draft — Revision 3 — September 14, 2026

Not introduced. Not scheduled. For Town Manager and Town Attorney review only.

Drafting note on numbering (delete before filing). The article number shown as 4-4 throughout this document is provisional. Article 4-3 of the Town Code is already assigned to the Uniform Fire Prevention Code and is not available. Article 4-4 has not been confirmed as unassigned. Verify against the current Town Code before filing; if 4-4 is occupied, renumber this Article and all internal cross-references globally.

Companion document. All explanatory commentary, legal background, scope limitations, and questions for counsel have been moved out of this document and into the accompanying transmittal memorandum, so that the text below can be reviewed and marked up as legislative language without commentary embedded in it.

ORDINANCE NO. _____

AN ORDINANCE OF THE MAYOR AND COMMON COUNCIL OF THE TOWN OF JEROME, ARIZONA, AMENDING CHAPTER 4 OF THE TOWN CODE BY ADDING A NEW ARTICLE 4-4, SURVEILLANCE EQUIPMENT; REQUIRING TOWN COUNCIL APPROVAL PRIOR TO THE ACQUISITION, INSTALLATION, OR OPERATION OF SURVEILLANCE EQUIPMENT; REQUIRING TOWN COUNCIL APPROVAL FOR THE INSTALLATION OF SURVEILLANCE EQUIPMENT ON TOWN-OWNED PROPERTY OR TOWN RIGHTS-OF-WAY BY OTHER PERSONS OR GOVERNMENTAL ENTITIES; PROVIDING FOR SEVERABILITY; AND ESTABLISHING AN EFFECTIVE DATE.

WHEREAS, Town Code Section 4-2-7 permits apparatus and equipment for the Fire Department to be approved by the Town Manager or the Council, and therefore permits acquisition without any Council vote; and

WHEREAS, Article 4-1 of the Town Code, governing the Police Department, contains no equipment-approval provision of any kind; and

WHEREAS, the Council finds that equipment used to record or monitor activity in public places warrants a public agenda item and a Council vote before acquisition or installation, separate from the approval process applicable to routine departmental equipment; and

WHEREAS, the Town owns and controls real property and rights-of-way within its corporate limits and has authority to determine the terms on which fixed equipment is installed on that property; and

WHEREAS, the Council finds that this Ordinance is in the interest of the public health, safety, and welfare of the Town of Jerome;

NOW, THEREFORE, BE IT ORDAINED by the Mayor and Common Council of the Town of Jerome, Arizona, that Chapter 4 of the Town Code is amended by adding a new Article 4-4 to read as follows:

ARTICLE 4-4 SURVEILLANCE EQUIPMENT

Section 4-4-1 Definitions

For purposes of this Article, the following definitions apply:

A. "Surveillance Equipment" means any camera, video recording device, license plate reader, or similar equipment used for the purpose of recording, monitoring, or capturing images or activity in a public place, right-of-way, or on Town-owned property on an ongoing basis, regardless of whether the equipment is purchased and owned by the Town, leased, provided under a subscription or service agreement, or owned and operated by a third party under contract with or authorization from the Town, and regardless of whether the cost is a one-time purchase price or a recurring fee for access, monitoring, alerts, analytics, or data storage.

B. "Surveillance Equipment" does not include:

1. body-worn cameras used by law enforcement personnel in the course of an individual response or investigation;

2. dash-mounted cameras in Town vehicles; or

3. equipment used solely for internal building security within a Town facility that does not capture images of public areas outside that facility.

C. "Approval by majority vote" means the affirmative vote of a majority of the full membership of the Town Council at a regular or special meeting.

D. "Town property" means real property owned or controlled by the Town of Jerome, and any public right-of-way owned by, dedicated to, or maintained by the Town of Jerome.

Section 4-4-2 Council Approval Required — Town Departments

A. No department, officer, or employee of the Town of Jerome shall fund, acquire, lease, install, operate, or enter into any contract, subscription, or service agreement for Surveillance Equipment without the prior approval of the Town Council by majority vote.

B. This Section applies regardless of whether the equipment is owned by the Town or by a third party, and regardless of whether the Town's obligation is a one-time expenditure or a recurring fee.

C. This Section applies notwithstanding any other provision of this Code, including Section 4-2-7, to the extent that provision would otherwise permit approval of such equipment by the Town Manager alone.

Section 4-4-3 Approval Required — Installation by Other Persons or Governmental Entities on Town Property

A. No person, and no local, county, state, or federal governmental entity or agency other than the Town of Jerome, shall install, place, fund, or operate any Surveillance Equipment on Town property

without the prior approval of the Town Council by majority vote, obtained under the notice procedure required by Section 4-4-5.

B. This Section is an exercise of the Town's authority over its own real property and rights-of-way. It does not apply to, and does not purport to regulate, any governmental entity's own property, equipment, or personnel located outside Town property.

C. Nothing in this Section restricts, conditions, or otherwise affects the law-enforcement authority of any agency with jurisdiction within the Town, including the countywide authority of the Yavapai County Sheriff under A.R.S. § 11-441. This Section applies only to the physical installation and operation of equipment on Town property.

D. This Section does not apply to the right-of-way of any state highway, including State Route 89A, which is under the jurisdiction of the Arizona Department of Transportation pursuant to A.R.S. § 28-332(A).

E. Approval under this Section is in addition to, and not in lieu of, any permit or authorization otherwise required for use of or encroachment upon a Town right-of-way, including any permit required under Town Code Section 14-4-1.

Section 4-4-4 Conditions of Approval; Term; Removal

A. In granting approval under Section 4-4-2 or Section 4-4-3, the Council may impose conditions, including conditions governing location, mounting, field of view, hours of operation, data retention, data access, insurance, and indemnification.

B. Approval granted under Section 4-4-3 shall state a term not to exceed five (5) years and may be renewed by the Council upon application. The Council may revoke an approval granted under Section 4-4-3 for failure to comply with a condition of that approval, after written notice and a reasonable opportunity to cure.

C. Upon expiration or revocation of an approval granted under Section 4-4-3, the approved entity shall remove the equipment and restore the affected Town property at its own expense.

D. Where Surveillance Equipment is owned, hosted, or serviced by a third party, the governing contract, subscription, or service agreement shall provide that the third party may not use data collected by the equipment for any purpose other than delivering the contracted service to the Town, may not sell or share that data with any other party, and shall delete that data upon termination of the agreement.

E. An approval granted under Section 4-4-3 to another governmental entity may be memorialized in an intergovernmental agreement under A.R.S. § 11-952, or in a license or lease of Town property, as the Council determines appropriate.

Section 4-4-5 Public Notice

Any request for Council approval under Section 4-4-2 or Section 4-4-3 shall be identified as a distinct agenda item, described in ordinary language sufficient to inform the public of the type of equipment proposed and its intended location or coverage area, and posted in accordance with the Town's standard public meeting notice requirements under A.R.S. Title 38, Chapter 3, Article 3.1. No additional notice procedure beyond the Town's existing agenda-posting practice is required by this Article.

Section 4-4-6 Historic Overlay District Coordination

A. Surveillance Equipment proposed for installation within the boundaries of the Historic Overlay District shall, in addition to the approval required under Section 4-4-2 or Section 4-4-3, be reviewed by the Design Review Board, or by its successor body with jurisdiction over design review within the Historic Overlay District.

B. Review under this Section is limited solely to the visual placement, mounting, and appearance of the equipment for consistency with the streetscape and visual-quality standards applicable to signs, lighting, and street furniture under the Jerome Zoning Ordinance and the Historic Preservation Element of the General Plan.

C. Review under this Section is advisory only and does not extend to, and shall not be construed as authority over, whether the Surveillance Equipment is approved. That determination rests solely with the Town Council under Section 4-4-2 or Section 4-4-3.

D. Review under this Section shall occur before, or concurrently with, the Council's consideration of the request.

Section 4-4-7 Existing Equipment

A. Surveillance Equipment lawfully installed and in operation prior to the effective date of this Article may continue to be operated without approval under this Article.

B. Any material expansion, relocation, or replacement of such equipment, and any change in the capability of such equipment — including the addition of automated license plate reading, facial recognition or other biometric identification, automated analytics, remote access, or third-party access — shall require approval under Section 4-4-2 or Section 4-4-3, as applicable.

Section 4-4-8 Emergency Exception

Nothing in this Article prevents the temporary deployment of Surveillance Equipment by law enforcement or fire personnel in direct, immediate response to an active emergency. Any such temporary deployment intended to continue beyond the adjournment of the next regular meeting of the Town Council, or beyond thirty (30) days from deployment, whichever occurs first, shall require approval under Section 4-4-2 or Section 4-4-3, as applicable, to continue.

Section 4-4-9 Enforcement

A. Compliance with this Article is a condition of any Town department's authority to expend Town funds for Surveillance Equipment in any form, and a condition of any other person's or entity's use of Town property for that purpose.

B. No purchase order, contract, subscription agreement, or invoice for Surveillance Equipment, including a recurring payment under a service agreement, shall be processed or approved by the Town's finance function without documentation of Council approval obtained under Section 4-4-2.

C. The remedies in this Section are in addition to, and not in place of, any general penalty otherwise applicable under Article 1-8 of this Code.

Section 4-4-10 Severability

If any section, subsection, sentence, clause, phrase, or portion of this Article is for any reason held to be invalid or unconstitutional by a court of competent jurisdiction, or is held to violate state law by the Attorney General under A.R.S. § 41-194.01, that portion shall be deemed a separate, distinct, and independent provision, and such holding shall not affect the validity of the remaining portions of this Article.

Section 4-4-11 Effective Date

This Article shall take effect thirty (30) days after its passage and adoption.

PASSED AND ADOPTED by the Mayor and Common Council of the Town of Jerome, Arizona, this ____ day of _____, 20____.

_____ _____

Mayor Town Clerk

APPROVED AS TO FORM:

_____

Town Attorney

End of clean ordinance text.

File Attachments for Item:

D. Consider Removing from the Table; and then, Consideration of Proposed Fire Department Bylaw Updates

Council will consider removing from the table, and may approve the staff proposed updates to the Fire Department bylaws.

TOWN OF JEROME

POST OFFICE BOX 335, JEROME, ARIZONA 86331
(928) 634-7943 FAX (928) 634-0715

Founded 1876
Incorporated 1899

STAFF SUMMARY REPORT

FROM: Carl Whiting, Fire Chief

ITEM: Jerome Fire Department Bylaws Update

MEETING DATE: October 13, 2026

Summary: The Jerome Fire Department Bylaws are required to be reviewed annually to ensure they remain current and consistent with applicable law and are reflective of the Department's current organizational structure and operations. The current bylaws were last revised three years ago in January 2023.

The proposed revisions update and clarify provisions throughout the bylaws, including department organization, membership, officer responsibilities, governance, conduct, participation and administrative procedures. The proposed updates also incorporate and align applicable provisions with the Personnel Policy recently adopted at September's Council meeting, ensuring that the Department's bylaws are consistent with the newly adopted policies and do not conflict with current Town-wide employment requirements.

Fiscal Impact: $0.00

Recommendation: Approval of Revised JFD Bylaws

TOWN OF JEROME
FIRE DEPARTMENT BYLAWS

ARTICLE I - DEFINITIONS

Active Member – A member who has completed probationary requirements and maintains the participation, training, certification, and other requirements established by the Department for active membership.

Career Member - An individual employed by the Town of Jerome in an authorized Fire Department position and whose duties include fire, emergency medical, rescue, prevention, administrative, or other Department responsibilities as established by the Town. Career members are Town employees and are subject to applicable Town personnel policies, employment requirements, compensation provisions, and other conditions of employment, in addition to these Bylaws and Department requirements applicable to their position.

Chain of Command - The Chain of Command is the established line of authority through which direction, supervision, accountability, operational orders, communications, and reporting are exercised within the Department. Members shall generally communicate concerns, requests, reports, and operational matters through their immediate supervisor or designated officer and proceed through successive levels of authority as necessary. The Chain of Command shall not prevent a member from directly reporting outside the chain of command an emergency, safety concern, unlawful conduct, harassment, retaliation, or other matter when immediate reporting is necessary or when otherwise authorized or required by Town policy or law.

Combination Department – an agency in which at least one active firefighter receives financial compensations such as a salary or hourly wage, and at least one does not, other than limited benefits such as token pay, insurance or awards. This hybrid model blends paid and volunteer personnel, often to meet community needs.

Due Process - means the fair and reasonable procedures afforded to a member before disciplinary action is imposed, consistent with applicable law, Town policy, employment status, and these Bylaws. At a minimum, where applicable, due process shall include notice of the alleged violation or basis for action, a reasonable opportunity to respond, impartial consideration of the matter, and the opportunity for review or appeal as provided by Town policy, these Bylaws, or applicable law. The specific procedures and rights applicable to a member may vary based upon the member's employment or membership status and the nature of the action being considered.

EMT – An Emergency Medical Technician (EMT) is a member who holds a current and valid National and Arizona Emergency Medical Technician certification or other legally recognized credential authorizing the member to provide emergency medical care at the EMT level. An EMT shall provide patient care only within the member's authorized scope of practice, training, certification and Department assignment.

Executive Board -The Department's designated advisory and review body consisting of the Fire Chief, Assistant Fire Chief, and Company Officers, as applicable and as established by these Bylaws or Town policy. The Executive Board shall advise the Fire Chief on Department operations, policy, membership, and other matters referred to it and shall perform the review and other responsibilities assigned to it by these Bylaws. The Executive Board shall not exercise authority reserved by law, Town Code, Town

Council action, or Town policy to the Town Council, Town Manager, Fire Chief, or other authorized Town official.

Firefighter – A Department member who has completed the training and certification requirements established by the Department and applicable Arizona requirements to perform fire suppression, rescue, hazardous material response, emergency response, and related duties within the scope of the member's training, certification, assignment, and authority.

In Good Standing - a member who maintains the qualifications, training, certifications, participation requirements, conduct standards, and other requirements applicable to the member's classification and assignment and who is not currently suspended, separated, or otherwise restricted from Department membership or duties by authorized Department or Town action.
A member may be considered in good standing only when the member:

1. Maintains all required licenses, certifications, training, medical or fitness-for-duty requirements, and other qualifications applicable to the member's position or assignment;

2. Meets the applicable Department participation and attendance requirements, subject to approved absences, medical restrictions, assigned duties, training, or other exceptions authorized under these Bylaws or Department policy;

3. Complies with these Bylaws, Department SOPs and SOGs, Town policies, lawful orders, applicable laws, and other requirements applicable to the member;

4. Has not been suspended or otherwise placed in a status that temporarily restricts the member from exercising the rights or responsibilities associated with good standing; and

5. Remains eligible to participate in Department activities consistent with the member's membership classification and operational status.

A member who temporarily cannot perform operational duties due to an approved medical restriction, leave, training assignment, or other circumstance authorized by the Fire Chief or Town policy shall not automatically be considered out of good standing solely because the member is temporarily unable to respond to emergency calls, provided the member continues to satisfy all requirements applicable to the member's temporary status.

A determination that a member is not in good standing shall be based on the applicable requirements of these Bylaws, Town policy, or other formally adopted Department requirements and shall be subject to the applicable due process and appeal provisions.

Off Duty - Off Duty means a period during which a member is not officially assigned, scheduled, directed, or authorized to perform Department duties or activities. An off-duty member remains subject to applicable laws, Town policies, Department rules, and the standards of conduct established by these Bylaws when acting in an official capacity, representing the Department, using Department property or credentials, or otherwise engaging in conduct that has a clear and material connection to the Department or Town.

Officer – A member of the Department who has been duly appointed, promoted or otherwise designated to a recognized supervisory or command position within the Department, and who has authority to and responsibilities established by these bylaws, Town policy, the Fire Chief, or applicable law. Officers may include the Fire Chief, Assistant Fire Chief, Captains, Engineers, or other positions formally designated

DRAFT

as an officer position by the Town or Fire Chief. An officer shall exercise only the authority granted to the position and shall remain subject to the Department's established chain of command.

On Duty – Means a period during which a member is officially engaged in assigned Department duties, authorized emergency response, Department-required training, meetings, standby or station coverage, administrative duties, or other activities authorized or directed by the Department or Town. A member may be considered on duty regardless of whether the member is compensated for the activity.

Operational Member – An active member who is currently authorized, trained, certified, medically cleared, and otherwise qualified to participate in emergency response and operational activities within the scope of the member's training and assignment.

Paramedic – A Paramedic is a member who holds a current and valid National and/or Arizona paramedic certification or other legally recognized credential authorizing the member to provide advanced emergency medical care at the paramedic level. A paramedic shall provide patient care only within the member's authorized scope of practice, training, certification, medical direction and Department assignment.

Participation Requirements - the minimum attendance, response, training, and other Department participation standards that a member must satisfy to maintain the applicable membership or operational status established by these Bylaws. Participation may include attendance at regular Department meetings, drills, training activities, dispatched emergency calls, authorized station coverage, standby assignments, and other Department activities recognized by the Fire Chief. Participation Requirements shall be measured and evaluated in accordance with Article VII and applicable Department policies and may be adjusted for approved absences, medical restrictions, assigned duties, training, or other circumstances authorized under these Bylaws.

Recruit – also known as a Probationary Member, is a person who has been accepted into the Jerome Fire Department and is undergoing the required orientation, training, evaluation, and consistently meets participation requirements before becoming eligible for Active Membership. A Recruit may participate in Department activities and training only to the extent authorized by the Department and shall perform duties within the limits of their training, certification, supervision, and assignment. A Recruit does not have voting privileges unless otherwise expressly authorized by these Bylaws.

Response - a documented participation by a member in a dispatched emergency incident or an authorized station staffing assignment for the purpose of providing or supporting emergency response capability. A response must involve an authorized emergency response, incident assignment, or station staffing assignment and must be documented in accordance with department procedures.

For purposes of Department participation requirements, a qualifying Response includes:

1. **Apparatus Response:** Responding on a Department apparatus to a dispatched incident and participating in the incident in an authorized operational, support, or command capacity;

2. **Individual Response:** Responding directly to a dispatched incident and arriving at the scene to perform an authorized operational, support, or command assignment within the member's training, certification, and authority;

3. **Station Staffing Response:** A member who is available for response and reports to a designated Jerome Fire Department station for the purpose of providing station coverage, staffing a reserve apparatus, or remaining available for an incident-related assignment may receive credit for a

Response. Members must appropriately notify Dispatch by radio upon arrivals and identify that the member has arrived at the station and is available for Department response. Such station staffing shall be documented in accordance with Department procedures.

4. **POV Response:** A member responding in a personally owned vehicle (POV) to a dispatched incident, station, staging area, or other authorized location shall do so only in accordance with Department SOPs/SOGs, applicable law, and any written authorization issued by the Department or Town. Members shall operate personally owned vehicles with due regard for public safety and shall comply with all traffic laws.
   Members who have been authorized to display or use emergency warning lights on a POV must have a current written agreement, affidavit, or other required acknowledgment on file with the Department. Such lights may be used only during an authorized emergency response and only within the geographic boundaries or circumstances specified in the member's authorization. Use of emergency warning lights outside the authorized boundaries or outside an authorized emergency response is prohibited, including travel before entering the authorized response area. Authorization to use emergency warning lights does not grant the member any right-of-way beyond that permitted by law and may be suspended or revoked for misuse, safety concerns, violation of Department policy, or violation of applicable law.

For purposes of station staffing, radio notification to Dispatch confirming the members' arrival at the station and availability for response shall constitute the required documentation of the station staffing Response. A member shall not receive Response credit merely for making a telephone call or sending a text message to Department personnel regarding their availability.

All Responses shall be documented through the Department's designated reporting, dispatch, attendance, or other official recordkeeping system. The Fire Chief or designee shall have authority to verify whether a claimed Response meets the requirements of this definition.

Standard Operating Guidelines (SOG) - formally adopted written guidelines intended to provide direction and a framework for Department operations, incident response, training, safety, and other activities while allowing reasonable professional judgment based upon the circumstances presented. SOGs shall be consistent with applicable federal and Arizona law, Town policies and ordinances, applicable regulatory requirements, and these Bylaws. Members are expected to follow applicable SOGs unless circumstances reasonably require deviation to protect life, safety, or property, or unless otherwise directed by an authorized officer.

Standard Operating Procedures (SOP) – formally adopted written procedures that establish specific, mandatory processes, responsibilities, and requirements for the consistent administration and operation of the Department. SOPs shall be consistent with applicable federal and Arizona law, Town policies and ordinances, applicable regulatory requirements, and these Bylaws. Members shall comply with applicable SOPs unless doing so would require an unlawful action or would create an immediate and unreasonable threat to life or safety.

Volunteer Coordinator - A Department officer appointed or designated in accordance with these Bylaws and Town policy to support the recruitment, orientation, communication, participation, training coordination, and administrative needs of Volunteer Members. The Volunteer Coordinator shall serve as a liaison between Volunteer Members and Department leadership, assist with maintaining accurate membership and participation information, and perform other duties assigned by the Fire Chief. The

Volunteer Coordinator shall not exercise command authority over other members solely by virtue of the position unless such authority is separately granted by rank, assignment, or direction of the Fire Chief.

Volunteer Member - An individual who has been duly accepted and appointed as a member of the Jerome Fire Department to provide fire, emergency medical, rescue, prevention, support, or other authorized Department services in a volunteer capacity and who is not employed by the Town of Jerome in the position for which the volunteer service is being performed. Volunteer members may receive reimbursement, stipends, benefits, pension or retirement credit, or other compensation or benefits when authorized by the Town and permitted by applicable law. Volunteer status does not, by itself, establish an employment relationship with the Town, nor does length of volunteer service, by itself, grant authority to direct, supervise or dictate the duties of a career staff member unless expressly authorized by the Fire Chief or their designee.

ARTICLE II – NAME, AUTHORITY, AND LEGAL STATUS

This organization shall be known as the Jerome Fire Department ("Department"), a department of the Town of Jerome, an incorporated municipality within the State of Arizona. The Department is a combination fire department, consisting of career and volunteer personnel who serve the Town of Jerome and its residents in accordance with applicable laws, ordinances, policies, rules and Department regulations.

The Department operates under the authority of the Jerome Town Council and applicable Arizona Revised Statutes (A.R.S.), and is subject to all municipal policies, state laws, and applicable federal regulations.

Career and volunteer members may have different employment, compensation, scheduling, benefits, and administrative statuses, as established by the Town of Jerome and applicable law; however, all members are subject to the standards, qualifications, training requirements, operational procedures, and codes of conduct applicable to their respective positions and duties.

All members serve as representatives of the Town of Jerome and shall conduct themselves in a manner that upholds the integrity, professionalism, and public trust associated with the Department. The standards of conduct expected of a firefighter apply at all times, whether a member is on duty, off duty, acting in an official capacity, or otherwise identifiable as a member of the Department.

DRAFT

ARTICLE III – ORGANIZATION

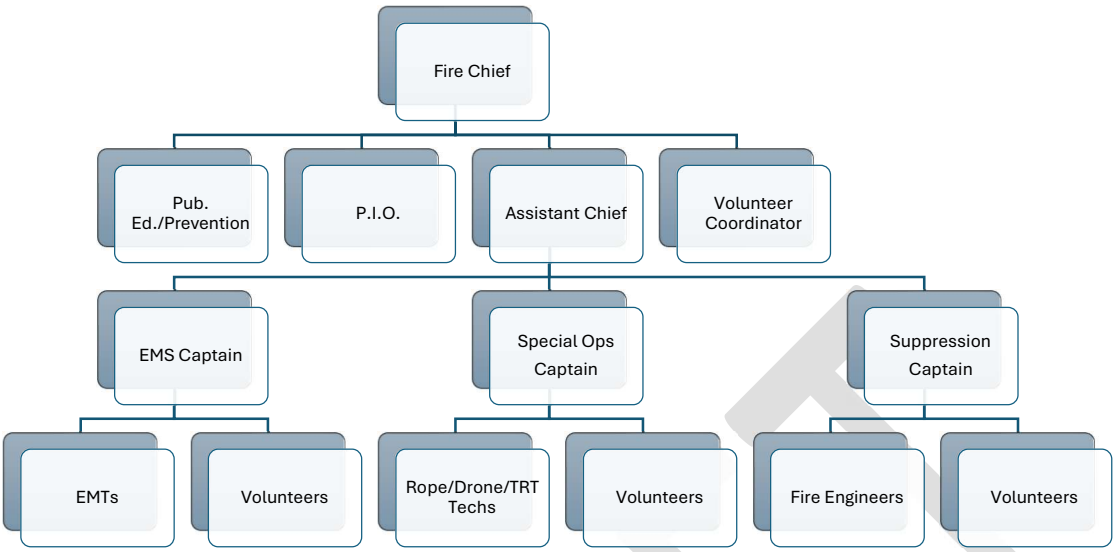

Section 1 – Department Structure

The Department shall consist of the following operational divisions:

Suppression Division – made up of firefighters and whose purpose will be to suppress fires, handle hazardous materials incidents and supports the EMS and Rescue divisions at rescue and medical incidents.

Emergency Medical Services (EMS) Division – made up of EMTs, paramedics and will provide emergency medical services to the Town of Jerome and surrounding areas under the direction of the Verde Valley Medical Center Emergency Department.

Special Operations Division – made up of Drone pilots, TRT team, Swiftwater team and other technical rescue personnel, and will provide technical rescue services to the Town of Jerome and the surrounding areas.

Fire Prevention Division – made up of the Fire Chief, Assistant Fire Chief, fire investigators and fire inspectors, and will conduct fire inspections and enforce life safety codes adopted by the Town of Jerome. The prevention division will also include public education efforts.

Active members may be assigned to one or more of these divisions, upon completion of applicable licensure or certification, where necessary.

Operational activities, specialized operations, equipment use, training, safety, and response protocols shall be governed by Department SOPs/SOGs consistent with applicable NFPA, Arizona regulatory requirements, and other applicable law. Personally owned vehicles may be used for emergency response or Department assignments only as authorized by the Fire Chief, Department SOPs/SOGs and applicable law. The Department may utilize unmanned aircraft

systems (UAS), including drones as a Special Operations resource. Drone operations, including pilot qualifications, authorization, training, flight operations, equipment use, airspace compliance, data and imagery managements and related safety shall be governed by applicable law and departmental SOPs/SOGs.

Section 2 – Chain of Command

The department may operate under a structured chain of command consisting of:

- Fire Chief
- Assistant Fire Chief
- Company Officers (Captain, Engineer or Senior Firefighter)
- Firefighters/EMTs

In the absence of the Fire Chief and Assistant Fire Chief, paid or career Department staff shall have authority over Department operations consistent with their position, assignment, training, and applicable Town policy. A volunteer member, or staff member from another Town department, shall not assume authority over the Department, Department operations, or career staff unless such authority has been expressly granted or directly authorized by the Fire Chief.

ARTICLE IV – CODE OF CONDUCT

Section 1 – Purpose and Applicability

This Article establishes the standards of conduct expected of every Department member. It applies equally to paid employees, volunteer members, probationary members, officers, special members, and any other person serving under the authority of the Department, regardless of compensation, rank, assignment, or membership classification. For purposes of this Article, each such person is referred to as a "member."

Section 2 – Public Trust and Professional Conduct

Members serve the public and represent the Town of Jerome and the Department. Each member shall act with integrity, honesty, professionalism, courtesy, accountability, and respect; perform assigned duties diligently and within the member's training and authority; comply with lawful orders and the established chain of command; and avoid conduct that materially undermines public trust, Department operations, or the safety of others.

Section 3 – On-Duty and Off-Duty Conduct

The standards of conduct expected of a firefighter and public servant apply at all times. Members shall conduct themselves, both on duty and off duty, in a manner consistent with the integrity and public trust of the fire service when acting in an official capacity, wearing or displaying Department identification, using Department property, representing themselves as affiliated with the Department, or when their conduct has a clear and material connection to the Department or Town. Nothing in this section is intended to regulate lawful private activity that has no such connection.

Section 4 – Safety, Readiness, and Lawful Orders

Members shall place life safety and incident integrity above personal convenience; follow Department bylaws, Town policies, SOPs, SOGs, safety rules, and applicable laws; use required protective equipment; promptly report hazards, injuries, damaged equipment, and unsafe practices; and refrain from reckless, insubordinate, or unauthorized acts. A member who reasonably believes an order is unsafe, unlawful, or beyond the member's training shall immediately communicate the concern through the chain of command, except when urgent action is necessary to prevent imminent harm.

Members responding in a personally owned vehicle shall operate the vehicle in a safe and responsible manner and shall comply with all applicable traffic laws and Department requirements governing emergency response.

Section 5 – Respectful and Inclusive Workplace

Members shall treat coworkers, patients, residents, visitors, partner agencies, and members of the public with dignity and fairness. Discrimination, harassment, retaliation, bullying, threats, hazing, abusive language, and conduct that interferes with a safe and effective workplace are prohibited. Employment status, volunteer status, rank, tenure, or assignment shall not be used to demean, exclude, intimidate, or unfairly favor another member.

Section 6 – Patient Care, Privacy, and Confidential Information

Members shall protect patient information, personal information, investigative information, security-sensitive information, and other confidential or legally protected records. Such information shall be accessed, used, discussed, photographed, recorded, retained, or disclosed only for authorized Department purposes and in accordance with law and Town policy. Members shall provide services impartially, preserve patient dignity, and remain within the scope of their certification, licensure, training, and assigned authority.

Section 7 – Conflicts of Interest, Gifts, and Use of Position

Members shall avoid actual or apparent conflicts between personal interests and Department responsibilities. Members shall not use rank, position, confidential information, uniforms, credentials, or Department affiliation for personal gain or preferential treatment, and shall disclose potential conflicts through the chain of command.

Gifts and Benefits. Members shall not solicit or accept any gift, gratuity, favor, compensation, service, discount, entertainment, loan or other benefit from any person or entity when the offer is intended or could reasonably appear intended to influence the member's official duties, judgement, or actions. Except as otherwise expressly authorized by Town policy or applicable law, a member shall not accept a gift valued at more than $20 from a single source, per single instance. Cash and cash-equivalent gifts, including gift cards, shall not be accepted. Members shall disclose any offered gift that may violate this Section to their supervisor and shall decline or return the gift as appropriate.

Gifts exchanged among Department members, including gifts between supervisors and subordinate personnel, shall not be used to influence assignments, evaluations, discipline, promotions, scheduling or Department decisions. Department-wide or group gifts and voluntary exchanges between members shall not create an expectation of preferential treatment or place undue pressure on any member to participate. Any gift involving a Department member's official authority, a pending Department decision, or a potential conflict of interest shall be disclosed through the appropriate chain of command.

Members shall comply with applicable Town ethics policies, conflict-of-interest requirements, and other governing laws. When the application of this Section is uncertain, the member shall seek guidance from the Fire Chief or Town Manager before accepting the gift or benefit.

Emergency Response and Incident Support Exception. The restrictions on gifts and benefits in this Section shall not apply to reasonable and customary meals, lodging, transportation, supplies, or other necessary services provided to Department members in connection with an authorized emergency response, mutual-aid assignment, wildland fire deployment, or other incident-related duty. This exception includes support provided through an incident management team, sponsoring or assisting agency, cooperating department, or established incident-support arrangement, when such support is provided for operational, logistical, or personnel welfare purposes and not for the member's personal benefit or to influence an official decision or action. Any compensation, reimbursement, or other benefit outside the scope of routine incident support shall remain subject to applicable Town policies and law(s).

Section 8 – Town and Department Property

Members shall safeguard and use Town and Department funds, facilities, vehicles, equipment, information systems, uniforms, insignia, credentials, and supplies only for authorized purposes. Members shall not misuse, remove, damage, alter, lend, or permit unauthorized access to such property and shall promptly report loss, theft, damage, or suspected misuse. Any Department-issued equipment or emergency warning equipment authorized for use on a personally owned vehicle remains subject to Department control and shall be used only for authorized Department purposes. Department equipment shall be used only for authorized Department purposes and in accordance with applicable laws, Town policies, these Bylaws, and Department SOPs/SOGs. The Fire Chief or designee may establish procedures governing the assignment, issuance, access, inspection, maintenance, security, transportation, and storage of Department equipment and may establish designated storage locations for Department equipment and specialized resources.

Section 9 – Fitness for Duty and Impairment

Members shall report for duty, training, response, standby, and Department activities fit to safely perform assigned responsibilities. A member shall not operate Department vehicles or equipment, provide emergency services, or participate in operational activities while impaired by alcohol, cannabis, controlled substances, medication, fatigue, illness, or any other condition that creates a safety risk. Members shall follow applicable Town testing, reporting, and fitness-for-duty policies.

Section 10 – Communications, Social Media, and Public Statements

Only authorized members may speak on behalf of the Town or Department. Members shall not knowingly publish false, confidential, operationally sensitive, discriminatory, threatening, or harassing content in connection with Department activities. Personal opinions shall not be presented as official Department positions. Photographs, recordings, incident information, patient information, or images of Department facilities, operations, or equipment shall be shared only when authorized and lawful.

The Department shall maintain a designated communication system for distributing important Department information to all career and volunteer members. Department-designated email and text-message notifications shall be used for significant announcements, policy and bylaw updates, training information, special projects, requests for assistance, schedule changes, and other information requiring Department-wide awareness or member participation, as appropriate to the subject.

Information communicated at a meeting that requires action, follow-up, or awareness by members who were not present shall be distributed through the designated communication system when appropriate. Members shall maintain current contact information, participate in the Department's designated communications system, and review Department communications in a timely manner.

The Fire Chief or their designee shall establish procedures for distributing communications, maintaining current contact information, and identifying when acknowledgement or a response is required. Emergency notifications and time-sensitive operational communications shall follow applicable Department procedures.

Section 11 – Cell Phone Use at Incident Scenes

Members shall use personal or Department-issued cell phones and electronic devices at incident scenes only in a manner that supports operational needs, patient care, safety, documentation, or other authorized Department purposes. Device use shall not interfere with assigned duties, incident command, patient care, scene security, responder safety, or the privacy and dignity of patients, victims, witnesses, or members of the public.

Department Documentation Equipment. The Department may provide a Department-owned digital camera or other approved photographic documentation equipment for use at incident scenes, training activities, property damage incidents, and other authorized Department operations. The equipment shall be maintained and stored at a location designated by the Fire Chief, which may include the primary rescue vehicle. Members shall use Department-provided equipment when available and practicable for authorized documentation purposes. Equipment use, storage, maintenance, and transfer of images or recordings shall comply with Department procedures and applicable Town policies.

Personal Device Restrictions. The use of personal cell phones or personal devices to photograph, video record, audio record, transmit, store, or share images, audio, patient information, incident information, or other scene-related material is discouraged and may be

prohibited unless expressly authorized by the Incident Commander, Fire Chief, Town policy, or applicable law. When Department documentation equipment is unavailable or impracticable to use, members shall follow instructions from the Incident Commander or authorized officer regarding an appropriate alternative. Any authorized use of a personal device shall comply with applicable patient privacy requirements, confidentiality obligations, evidence preservation requirements, Arizona public records law, Arizona Open Meeting Law where applicable, and all Town and Department policies.

Handling of Incident Records. Photographs, recordings, messages, and other incident-related information created, stored, sent, or received in connection with Department duties shall be handled, transferred, preserved, and retained in accordance with applicable law and Town and Department policies. Members shall not retain, distribute, publish, or share incident-related material through personal accounts, applications, or devices except as expressly authorized by applicable law or Town policy.

Members shall understand that incident-related information on a personal device may be subject to preservation, review, disclosure, subpoena, public records requests, or other lawful process. Any request to secure or examine a personal device in connection with an authorized investigation, evidence preservation, legal compliance, or protection of patient privacy shall be handled in accordance with applicable law and Town policy.

Section 12 – Reporting, Cooperation, and Non-Retaliation

Members shall promptly report suspected violations of law, Town policy, Department rules, safety requirements, or this Code through the chain of command or another reporting channel authorized by Town policy. Members shall be truthful and cooperate with authorized administrative, safety, or legal reviews. Retaliation against a person who makes a good-faith report, participates in a review, or raises a safety concern is prohibited. Knowingly false or malicious reports may be subject to discipline.

Section 13 – Accountability and Enforcement

Each member is responsible for understanding and complying with this Code. Supervisors and officers shall model these standards and address concerns consistently, regardless of whether a member is paid or volunteer. Alleged violations shall be reviewed fairly and may result in corrective or disciplinary action consistent with Town policy, these bylaws, and the due-process provisions of Article V. Nothing in this Article creates a contract of employment, alters volunteer status, or limits rights and protections provided by law or Town policy.

Section 14 – Code of Ethics Acknowledgment

Each member shall review and comply with the Jerome Fire Department Code of Ethics included in the Appendices (Appendix A) to these bylaws. Upon appointment or acceptance into the Department, and again whenever the Code of Ethics is materially revised or when otherwise directed by the Fire Chief, each paid or volunteer member shall sign and date the acknowledgment and return it to the Fire Chief within the timeframe established by the Department. The signed acknowledgment shall be retained as a Department personnel or

membership record. Failure or refusal to sign and return the acknowledgment does not relieve a member of the obligation to comply with the Code of Ethics and may result in corrective or disciplinary action consistent with Town policy, these bylaws, and applicable due-process requirements.

ARTICLE V – GOVERNANCE AND AUTHORITIES

Section 1 – Fire Chief Authority

The Fire Chief shall perform the duties of and act in accordance with Town policies as set forth in section 4-2-4 of the Jerome Town Code. The Fire Chief is accountable to the Jerome Town Council, through administrative oversight by the Town Manager, and serves as the administrative and operational head of the Department. The Fire Chief is responsible for:

- Direct Enforcement of all applicable laws, codes and policies
- Appoint Officers (subject to Town policy and the Town Manager) and maintain oversight of personnel, training and operations
- Implement and enforce Bylaws, SOPs and Policies and Safety Programs

Personnel actions including suspension, or termination shall follow due process and are subject to review.

Section 2 – Department Officers

The officers of the Department may include:

- Fire Chief – one (1)
- Assistant Fire Chief – one (1)
- Captain(s) – no more than three (3)
- Engineer(s) – no more than three (3)
- Volunteer Coordinator – one (1)

The Chief, appointed by Town Council, will perform the duties of the Fire Chief as set forth in section 4-2-4 of the Jerome Town Code. He/she has the authority and responsibility to see that all aspects of the department are run in an efficient and effective manner.

The Assistant Chief is appointed by the Fire Chief with concurrence by the Town Manager. The Assistant Fire Chief will perform the duties assigned by the Fire Chief and shall act as the Department's second-in-command. In the absence of the Chief, the Assistant Fire Chief assumes the Fire Chief's administrative and operational duties, and exercises the authority of that office until the Fire Chief returns or the Town Council / Town Manager provides otherwise.

Secretary and all other departmental officers may be appointed or promoted by the Fire Chief, in accordance with the hiring process for the Town of Jerome.

Section 3 – Election, Appointment and Qualifications of Officers

All officers will serve until their successors are duly appointed.

An Auxiliary Liaison may be elected every 2 years, and is appointed by the Fire Chief.

In the event of a vacancy occurring in any office of the department, except the Fire Chief, the Fire Chief shall appoint a new officer for the remaining term. In the event that the Fire Chief's position becomes vacant, the Assistant Chief will fill the position until the Jerome Town Council has appointed another Fire Chief.
The Fire Chief overseas all divisions.

In the Fire Prevention division, he/she will direct a program of regular inspections of commercial occupancies in the Town of Jerome. Assistance Chief and Fire Marshall will act as the agent of the Fire Chief in abating fire and life safety hazards in accordance with the codes adopted by the Town. They may assist the Fire Chief in investigation of the cause of fires.

Captains must be active members of the Department in good standing, must have completed all training, certifications, and qualifications required for the Captain position, and must demonstrate the knowledge, judgment, leadership ability, and competence necessary to serve in an assigned supervisory or command role. A candidate for Captain must maintain minimum participation requirements and active membership status to remain eligible to serve as Captain. A Captain's supervisory authority is limited to the authority granted by these Bylaws, Town policy, Department SOPs/SOGs, the Fire Chief, or applicable law, and does not by itself create paid employment status or authority over Town employment matters.

> **Career Captains.** A Career Captain is a paid or career Department staff member appointed or assigned to the Captain position by the Fire Chief in accordance with Town policy. A Career Captain may exercise supervisory, operational, administrative, and chain-of-command authority over Department operations and personnel consistent with the Captain's position, assignment, training, applicable Town policy, Department SOPs/SOGs, and direction of the Fire Chief. In the absence of the Fire Chief and Assistant Fire Chief, a Career Captain may assume assigned Department authority consistent with the Department's chain of command.
>
> **Volunteer Captains.** A Volunteer Captain is a volunteer member appointed or designated by the Fire Chief to perform assigned operational, training, coordination, or incident-related responsibilities within the member's training, certification, assignment, and authority. A Volunteer Captain's rank or length of volunteer service does not, by itself, create employment status or grant authority to direct, supervise, or dictate the duties of a career staff member, assume Department-wide authority, or exercise authority over Town employment matters unless such authority has been expressly granted or directly authorized by the Fire Chief or Town Manager.

Captains may direct company operations at incidents, direct training drills, and perform other duties assigned by the Fire Chief, consistent with these Bylaws, Town policy, Department SOPs/SOGs, applicable law, and the Department's chain of command. A Captain shall exercise only the authority applicable to the Captain's career or volunteer status and assignment. Unless

expressly granted or directly authorized by the Fire Chief, a Volunteer Captain shall not assume authority over the Department, Department operations, or career staff in the absence of the Fire Chief and Assistant Fire Chief.

The EMS Captain shall direct the operations of the EMS Division only within the scope of the Captain's assigned authority unless command is assumed by a higher-ranking officer or by a member with greater relevant training, certification, or experience for the incident.

The suppression division Captains shall be Arizona EMT, Firefighter I & 2, and NWCG Firefighter 1 certified or higher.

The EMS division Captain must be Arizona EMT certified or higher.

The Fire Marshal must have completed fire inspection and fire code enforcement training.

The Engineer must be an active member of the fire department, in good standing, with two years of service and be Arizona EMT, Firefighter 1 & 2, and NWCG Firefighter 2 certified or higher. The Engineer or superior officer may direct company operations at incidents, assist with training drills and perform duties as assigned by the Fire Chief or other senior line officer, in the absence of a higher-ranking officer.

The Fire Chief and Assistant Chief need to have a combination of formal education and experience that provides the knowledge, skills and abilities necessary for satisfactory job performance.

Section 4 – Executive Board
The Executive Board shall consist of the Fire Chief, Assistant Chief, Fire Marshal, and Department Officers.

The Executive Board shall:

- Review disciplinary matters
- Provide recommendations on policy and membership
- Serve as an advisory body to the Fire Chief

Section 5 – Pension Board
The Pension Board members will attend meetings of the Jerome Volunteer Pension Board of Trustees and conduct the business of the board along with the other members of the board as set out in the Jerome Volunteer Pension Board Plan and Bylaws.

Four (4) Fire Department Members, of active status and in good standing, shall be elected to sit on the Pension Board of Trustees as stipulated in the Plan. The other members of the Pension Board of Trustees are the Town of Jerome Mayor, the Fire Chief and one layperson.

The four elected Members shall serve four-year terms as members of the Board of Trustees. The terms shall be staggered, with two Members being elected every two years as per the Plan Article 9.2. This election shall take place during the May business meeting.

ARTICLE VI – DISCIPLINE AND DUE PROCESS

No member shall be suspended, demoted, or terminated without due process.

Section 1 – Due Process

Minimum due process for disciplinary action in excess of a letter of reprimand shall include:

- Written notice of alleged violations
- Opportunity to respond
- Review by the Executive Board
- Right to appeal to the Town Council

Section 2 – Disciplinary Action

Grounds for discipline shall include, but are not limited to:

- Failure to meet participation requirements
- Violation of SOPs, safety policies, or Town policies
- Conduct detrimental to the Department

Disciplinary actions should include a verbal or written warning, written letter of reprimand, suspension, termination and all actions shall follow due process procedures, as outlined by the Town of Jerome Personnel Policy Handbook.

The Fire Chief may recommend to the Executive Board to expel, dismiss, demote or remove from the department any member or officer due to refusal to perform their duties or other behavior deemed detrimental to or unbecoming of the department.

The Fire Chief may be removed from office by the Jerome Town Council.

Section 3 – Appeals

Officers and members have the right to appeal disciplinary action through the established chain of command starting with the Executive Board up to Town Council, where applicable and/or necessary.

ARTICLE VII – MEMBERSHIP

Section 1 – Classes of Membership

- Probationary Member (also known as Recruit)
- Active Member
- Honorary Member
- Special Member

Probationary Member is granted after submittal and approval of a written application. Probationary members are also known as “recruits” and must be at least 18 years of age. During

DRAFT

the probationary period, a minimum of 6 months, they will receive training specific to the community and department, and become eligible to attend classes and trainings that allow recruits to test for basic Arizona Firefighter I & II certification, and/or Arizona Emergency Medical Technician certification, certified wildland firefighter or other specialized technical position, such as TRT, Swiftwater or Drone pilot. These members will not have voting ability during department meetings where votes may be required.

Active membership is granted after the probationary period. Active membership may be achieved after a 6-month probationary period, and after having met the minimum participation requirements for active membership. Active members have voting capacity at department meetings where voting is required and will earn credit toward their individual retirement account if active membership requirements are met.

Honorary membership is available to retired fire department members. Honorary members will be given access to department facilities but will not have voting privileges in meetings where voting may be necessary. Honorary members will not serve as officers.

Special Membership is appointed by the Fire Chief. The Chief may appoint a person to be the Fire Department Photographer, Public Information Officer and/or other pertinent special role, which may be designated as a special member. Special members will be given access to the department facilities but will not have active voting privileges.

Section 2 – Qualifications

All members must:

- Be at least 18 years of age
- Pass a background check
- Complete Fit for Duty medical exam, as applicable under NFPA standards; and
- Meet all applicable training, certification and fit for duty requirements.

The Fire Chief, in coordination with the Town Manager or designee, shall ensure that required background checks and Fit for Duty examinations are completed by appropriately authorized individuals or providers. The timing, frequency, scope, and documentation of such checks and examinations shall be established by applicable law and Town policy or by an approved Department policy. Medical and background information shall be maintained and disclosed in accordance with applicable confidentiality requirements and law.

A member whose tuition or training costs are paid or reimbursed by the Town of Jerome, the Department, or the Jerome Volunteer Fire Department Auxiliary shall comply with Article VIII, Section 2, and any separate written reimbursement agreement executed in connection with that payment or reimbursement.

Members with 50% or greater attendance at regular meetings and drills and who respond to 20% or greater of the alarm calls during the fiscal year (July 1–June 30) will earn credit with the Jerome Volunteer Pension & Benefit Plan for the year.

Members, with the Chief's approval, may participate in special work sessions to maintain good standing in their membership. The Chief shall provide a list of projects or tasks that need attention. Members who are in another authorized training class or activity shall be given credit for attendance at missed drills or meetings, subject to the Chief's approval.

Members shall maintain current contact information with the Department and participate in the Department-designated communication system as a condition of active membership. Members shall review Department communications and respond to requests requiring acknowledgement or action within the stated timeframe, when practicable. Members who experience technical difficulties or lack reliable access to a designated communication method shall notify the Fire Chief or designee so that an alternative means of communication may be arranged.

Members who fail to maintain membership qualifications may be removed from active membership status until the applicable requirements are met, subject to any applicable transition plan or approved remediation process. The Fire Chief may recommend to the Executive Board that a member or officer be expelled, dismissed, demoted, or removed from the Department due to refusal to perform their duties or other behavior deemed detrimental to or unbecoming of the Department. Officers and members shall have the right to appeal such disciplinary action to the Executive Board.

Section 3 – Fitness for Duty

"Operational Member" shall mean any member who is authorized to participate in emergency response activities and is capable of performing the essential job tasks associated with fire suppression, emergency medical services, and other assigned incident operations.

Operational Members shall meet and maintain medical and physical fitness standards consistent with NFPA 1582, Standard on Comprehensive Occupational Medical Program for Fire Departments, or equivalent standards adopted by the Town. Members must demonstrate the ability to safely and effectively perform essential job functions as a condition of operational status.

Consistent with A.R.S. § 41-1463 and applicable nondiscrimination requirements, operational status shall be determined through objective, job-related criteria, including the member's ability to safely and effectively perform essential functions. Members may be subject to additional or more frequent medical or physical evaluations only when supported by identified risk factors, safety considerations, applicable standards, or other legitimate operational requirements.

Members authorized to respond in a personally owned vehicle shall also be physically and mentally capable of safely operating the vehicle under the conditions reasonably associated with an emergency response.

Members who are determined, through appropriate evaluation, to be unable to safely perform essential functions or meet fitness-for-duty requirements shall not serve in an operational capacity and may be reassigned to non-operational roles or placed in honorary status, as appropriate.

Section 4 – Participation Requirements

Active operational members shall maintain minimum participation levels to ensure operational readiness and organizational effectiveness.

1. Measurement Period
Participation shall be evaluated over a rolling twelve (12) month period unless otherwise specified by the Fire Chief.

2. Meeting Attendance

Operational members shall attend a minimum of thirty-three percent (33%) of all regular meetings and drills.

Officers shall attend a minimum of sixty percent (60%) of all regular meetings and drills.

3. Alarm Response Participation

Operational members shall respond to a minimum of twenty percent (20%) of all dispatched alarm calls for which they are available.

Officers shall respond to a minimum of thirty percent (30%) of all dispatched alarm calls for which they are available.

4. Definition of "Response"
For the purposes of participation requirements and attendance purposes, a response is defined as – a documented participation in a dispatched alarm or an incident-related station assignment.

A qualifying response includes any of the following:

- A documented turnout on Department apparatus;
- Arrival on scene and assignment to an operational, support, or command role; or
- Acknowledgment of the alarm by radio and arrival at a Jerome Fire Department Station 11 to provide station coverage, staff reserve apparatus, or remain available for an incident-related assignment while other personnel are committed to the call.

A telephone call, text message, radio inquiry, or other communication made solely to ask the Fire Chief or other Department personnel whether assistance is needed does not, by itself, constitute a response. Such communication qualifies only if the member is given or assumes an authorized assignment and reports to the incident, a Department station, or another designated location.

A member's use of a POV is a means of transportation and does not by itself establish a qualifying response. A POV response shall receive response credit only when the member meets the requirements for a qualifying POV response as established in Article I and applicable Department SOPs/SOGs.

All qualifying responses must be recorded in the Department's official reporting or attendance system.

5. Availability Adjustment
The total number of alarm calls used to calculate participation may be adjusted by the Fire Chief or designee to account for:

- Acknowledged and approved notification of an extended absence by the Fire Chief.
- Injury or medical restriction
- Duty assignment (e.g. admin, training, or command not requiring response)
- Other extenuating circumstances

6. Compliance and Review
Members who fail to meet participation requirements may be subject to review and reclassification of membership status, consistent with department policy.

Section 5 – Separation from the Department and Return of Property
Upon separation, resignation, retirement, termination, expiration of membership, or other cessation of service with the Jerome Fire Department, all Town and Department property issued, assigned, or entrusted to the member shall be returned promptly and in accordance with Department procedures. This includes, but is not limited to, identification cards and credentials, keys, access devices, radios and communications equipment, uniforms, personal protective equipment (PPE), tools, equipment, records, documents, electronic devices, and any other Town or Department property.

Returned property shall be in reasonable condition, ordinary wear and tear excepted. The Department shall document the return and disposition of issued property and may require inspection, inventory, or other reasonable measures to establish accountability for Town and Department property.

A member who fails to return, loses, damages, destroys, or otherwise improperly retains Town, Department, or Auxiliary property may be subject to appropriate administrative, disciplinary, or other lawful action, including recovery of the property or, where legally authorized, recovery of the Town's actual loss or reasonable replacement cost. Any such action shall be taken in accordance with applicable federal and Arizona law, Town policies and procedures, Department bylaws, applicable agreements, and any signed equipment or property acknowledgment.

Nothing in this provision authorizes an unauthorized deduction from the wages or other compensation of a Town employee. Any deduction, withholding, or other recovery from employee compensation shall comply with applicable Arizona wage laws, including A.R.S. §§ 23-352 and 23-353, and any other applicable law or written authorization. The Town, Department or Auxiliary may pursue other lawful remedies for the recovery of Town, Department or Auxiliary owned property or amounts properly owed, as applicable.

Members shall not retain Town, Department or Auxiliary property after separation as security for, or in anticipation of, any claim for wages, compensation, reimbursement, pension benefits, or other amounts allegedly owed to the member.

For purposes of this provision, volunteers and other non-employee members remain responsible for the return and proper care of property entrusted to them. The absence of an employment relationship does not create a right to retain Town, Department or Auxiliary property. Where property is not returned, the Town or Auxiliary may pursue any remedy available under applicable Arizona law, including recovery of the property and, where appropriate, recovery of damages or replacement costs.

The Department shall make reasonable efforts to obtain the return or accounting of all issued property before a separation is considered administratively complete. Failure to complete the property-return process may be documented as an unresolved separation matter and referred to the Fire Chief, Town Manager, or other appropriate Town authority for further action.

ARTICLE VIII – TRAINING, EDUCATION AND SAFETY COMPLIANCE

Section 1 – Training and Safety Compliance.
All members shall meet minimum training standards consistent with NFPA 1010 (firefighter), NFPA 472-1072 (Hazardous Materials), and applicable EMS certification requirements.

All active members, in good standing, shall meet minimum training standards consistent with NWCG (National Wildfire Coordinating Group) and FEMA qualifications. At a minimum, personnel shall complete:

- NWCG S-130 Firefighter Training
- NWCG S-190 Introduction to Wildland Behavior
- NWCG L-180 Human Factors in the Wildland Fire Service, where applicable.
- FEMA ICS 100
- FEMA ICS 200
- FEMA ICS 700

All members shall comply with:

- OSHA/ADOSH standards
- NFPA standards as adopted by the Department
- Department SOPs and safety policies

The Department shall maintain a safety and risk management program consistent with NFPA 1500. Members shall participate in ongoing training as defined in Department SOPs.

Section 2 – Tuition Reimbursement and Training Payments
The Town of Jerome, the Department, or the Jerome Volunteer Fire Department Auxiliary may, when authorized and subject to available funding, pay or reimburse tuition, registration fees, required course materials, certification costs, examination fees, travel expenses, or other

approved costs associated with education or training that supports Department service. Approval shall be obtained before the expense is incurred and shall identify the paying party, approved costs, payment terms, and any service commitment.

When payment or reimbursement is conditioned upon a two-year service commitment following completion of the education or training, the member shall sign a separate written reimbursement agreement before payment is made. The agreement shall identify the Town, Department, or Auxiliary, as applicable, as the party entitled to reimbursement and shall state the reimbursable costs, the date the service commitment begins, the circumstances under which repayment is required, any authorized prorating or waiver, and the repayment terms.

If the member cannot or does not honor the two-year service commitment, the member shall reimburse the party identified in the separate written agreement in accordance with that agreement and applicable law and Town policy. Nothing in this section independently creates a debt or repayment obligation beyond the terms of the separate written agreement.

ARTICLE IX – COMPENSATION AND VOLUNTEER STATUS

Section 1 – Volunteer Status

Members of the Department are considered volunteers and not employees for purposes of the Fair Labor Standards Act (FLSA), except where explicitly hired as Town employees.

Volunteer members shall not receive wages but may receive stipends as set by Town Council and permitted by local, state and/or federal law.

Section 2 – Compensation

The officers and members of the fire department may be compensated by the Town Council in accordance with section 4-2-3 of the Jerome Town Code.

Compensation for qualifying responses to active calls or incidents shall be established by the Town Council. The standard per-call compensation rate shall be the rate approved by the Town Council. For qualifying responses occurring between the hours of 10:00 p.m. and 6:00 a.m., members shall receive compensation at twice the standard per-call rate, per qualifying response. This overnight rate shall apply to each qualifying response during those hours and shall not be construed as an hourly wage or as compensation for time spent on duty, unless otherwise required by applicable law or separately authorized by the Town Council. All responses must meet the qualifying response requirements established in Article I and applicable Department policy.

Compensation, if provided, shall:

- Be a flat rate amount based on response to active calls/incidents
- Be paid out quarterly
- Be approved by the Town Council

Stipends may be structured as annual or periodic payments based on membership status and participation. Stipend amounts, eligibility criteria, payment structure, and any changes to stipends shall be determined and set by the Town Council, and may be amended, adjusted, suspended, or discontinued at the Town Council's discretion.

For purposes of any compensation based upon response to an active call or incident, a POV response shall qualify only when it meets the definition of a qualifying response under Article I and applicable Department policy.

Section 3 – Dual Role Personnel

Individuals employed by the Town of Jerome shall not serve as volunteer members of the Department in the same or substantially similar capacity in which they are employed, where such service would create a conflict of interest, supervisory conflict, or violation of wage and hour laws.

For the purposes of this section, "same or substantially similar capacity" includes assignments where the member:

Performs duties that are materially equivalent to their paid position, or

Operates within the same chain of command, supervision structure, or functional role as their employment.

Exceptions may be granted only when:

A documented legal review confirms compliance with applicable federal and state labor laws (including FLSA), and

The dual-role assignment does not create conflicts related to supervision, compensation, or liability exposure.

All exceptions must be:

Approved in writing by the Fire Chief and Town Administration, and

Clearly define the member's roles, limitations, and reporting structure

Under no circumstances shall a member:

Volunteer in a capacity where they are directly or indirectly supervised by themselves or a subordinate in their paid role, or

Receive compensation or benefits in a manner that conflicts with applicable wage and hour regulations.

The Fire Chief retains the authority to restrict, modify, or revoke dual-role assignments at any time to maintain compliance and operational integrity.

DRAFT

Section 4 – Pension/Retirement

Eligible members may participate in a Town-approved volunteer pension program in accordance with applicable laws.

Section 5 – Wildland and Emergency Assistance Assignments

Members of the Department may be requested, selected, or authorized to participate in wildland fire assignments, emergency assistance assignments, mutual-aid deployments, or other extended-duration emergency assignments outside the Town of Jerome.

1. Career Employees

A salaried or exempt Town employee who is assigned by the Town or Department to a wildland fire assignment or other emergency assistance assignment may be compensated for the assignment in accordance with applicable federal and state wage and hour laws and Town policy.

When authorized and legally permissible, the employee may be treated as non-exempt for purposes of the specific assignment and compensated at the employee's regular hourly equivalent rate, calculated from the employee's annual salary. The employee shall be eligible for overtime compensation at one and one-half (1.5) times the applicable hourly rate for hours worked in excess of forty (40) hours during the applicable seven-day workweek, subject to applicable law and Town payroll procedures.

The employee's regular salaried employment status shall not otherwise be changed solely by virtue of participation in the temporary assignment.

2. Volunteer Members

A Volunteer Member who is selected, requested, or authorized to participate in a wildland fire assignment, emergency assistance assignment, mutual-aid deployment, or other extended-duration emergency assignment outside the Town of Jerome may receive compensation for the assignment separate from any stipend or other compensation associated with the member's ordinary volunteer service with the Department.

Compensation for such assignments shall be established by the applicable assignment, sponsoring agency, contract, agreement, or other authorized arrangement and shall be paid in accordance with applicable federal and state law. Such compensation shall be separate from the member's ordinary volunteer service with the Jerome Fire Department and shall not, by itself, alter the member's volunteer status with the Department.

The member shall be responsible for complying with all applicable requirements associated with the assignment, including those related to compensation, taxation, reporting, credentialing, incident command, safety, and agency requirements.

3. Assignment Authorization and Documentation

DRAFT

All wildland and emergency assistance assignments shall be authorized or approved through the Fire Chief, Town Manager or the appropriate Town authority before deployment when practicable. The Department shall maintain appropriate records identifying the member, assignment, dates of deployment, employing or sponsoring agency, applicable compensation arrangement, and other documentation required by Town policy or applicable law.

Nothing in this section shall be interpreted to create an employment relationship between the Town of Jerome and a Volunteer Member solely because the member participates in a compensated wildland or emergency assistance assignment. Conversely, no compensation arrangement shall be used to avoid an employment relationship or applicable wage, tax, workers' compensation, or benefits requirement established by law.

ARTICLE X – BENEFITS AND INSURANCE

All members shall be covered by:

- Workers' Compensation as provided by the Town (A.R.S. § 23-901)
- Applicable liability protections while acting within scope of duty

The Town shall provide indemnification to members to the extent allowed by law.

ARTICLE XI – MEETINGS AND GOVERNANCE

Section 1 – Open Meeting Law

Meetings shall be conducted in accordance with Arizona Open Meeting Law where applicable.

Section 2 – Business Meetings

The regular business meeting will be held on the first Thursday of the Month at 5pm at Station 11.

Special meetings may be called for the Fire Chief or during his or her absence by the Assistant Chief, or two thirds of the active members of the department.

Weekly drills will be held every Thursday at 5p.m., except the first Thursday of the month.

Section 3 – Executive Board Meeting

The Executive Board may meet on the Thursday before each regular business meeting at 4 p.m. at Station 11.

Section 4 – Quorum and Meeting Structure

A quorum shall consist of 50% of active members with voting privileges.

Meetings will be conducted under Roberts Rules of Order. Any member may request and secure secret balloting on any motion he or she may desire. The meetings will be conducted in the following order:

1. Call to Order

2. Reading and approval of previous minutes
3. Auxiliary financial report
4. Division reports
5. Training reports
6. Equipment reports
7. Fire Chief's report
8. Old business
9. New business
10. Adjournment

ARTICLE XII – AMENDMENTS

These bylaws may be amended by:

- Two-thirds vote of a quorum of active members, in good standing
- Approval by the Town Council

Proposed amendments shall be provided to all Department members, including career and volunteer personnel, by Department-designated email notification at least fourteen (14) calendar days before the meeting or other authorized proceeding at which the amendments will be considered. Notice shall include the proposed amendment text or a summary of the proposed changes and information regarding how members may submit comments or recommendations.

Notice of proposed amendments shall not be satisfied solely by announcement at a Department meeting. Members shall be given a reasonable opportunity to review and provide input before consideration of the proposed amendments. Member comments and recommendations shall be provided to the appropriate reviewing or approving authority for consideration.

Fifty percent of all active members present shall constitute a quorum for such voting purposes. All members shall review the Bylaws and Personnel Policies each election year during the May business meeting. Amendments to these Bylaws, once approved by department vote, will be submitted to the Town Council for approval.

Nothing in this Article shall supersede Town policy, Town Code, applicable law or any required Town Council notice, hearing or approval procedure.

ARTICLE XIII – LEGAL COMPLIANCE

If any provision of these bylaws conflicts with federal law, Arizona law, or Town policy, such law or policy shall prevail.

ARTICLE XIV – ADOPTION

These bylaws become effective upon approval by the Jerome Town Council based upon recommendation and a majority vote of all active members of the Jerome Fire Department.

Appendix A – Firefighter Code of Ethics/Conduct

This form to be signed and returned

I understand that I have the responsibility to conduct myself in a manner that reflects proper ethical behavior and integrity. In so doing, I will help foster a continuing positive public perception of the fire service. Therefore, I pledge the following:

- Always conduct myself, on and off duty, in a manner that reflects positively on myself, my department and the fire service in general.
- Accept responsibility for my actions and for the consequence of my actions.
- Support the concept of fairness and the value of diverse thoughts and opinions.
- Avoid situations that would adversely affect the credibility or public perception of the fire service profession.
- Be truthful and honest at all times and report instances of cheating or other dishonest acts that compromise the integrity of the fire service.
- Conduct my personal affairs in a manner that does not improperly influence the performance of my duties, or bring discredit to my organization.
- Be respectful and conscious of each member's safety and welfare.
- Recognize that I serve in a position of public trust that requires stewardship in the honest and efficient use of publicly owned resources, including uniforms, facilities, vehicles and equipment and that these are protected from misuse and theft.
- Exercise professionalism, competence, respect and loyalty in the performance of my duties and use information, confidential or otherwise, gained by virtue of my position, only to benefit those I am entrusted to serve.
- Avoid financial investments, outside employment, outside business interests or activities that conflict with or are enhanced by my official position or have the potential to create the perception of impropriety.
- Never propose or accept personal rewards, special privileges, benefits, advancement, honors or gifts that may create a conflict of interest, or the appearance thereof.
- Never engage in activities involving alcohol or other substance use or abuse that can impair my mental state or the performance of my duties and compromise safety.
- Never discriminate on the basis of race, religion, color, creed, age, marital status, nationality, ancestry, gender, sexual preference, medical condition or handicap.
- Never harass, intimidate or threaten fellow members of the service or the public and stop or report the actions of other firefighters who engage in such behaviors.
- Responsibly, use social networking, electronic communications, or other media technology opportunities in a manner that does not discredit, dishonor, or embarrass my organization, the fire service and the public. I also understand that failure to resolve or report inappropriate use of this media equates to condoning this behavior.

Name:_____

Signature: _____

Date:_____

DRAFT

File Attachments for Item:

E. Consider Proposal Agreement from Willdan for a Complete Water and Wastewater Rate Analysis and Authorizing the Town Manager to Take the Necessary Steps to Execute the Agreement

Council will consider and may approve the agreement and authorize the Town Manager to execute said agreement.

TOWN OF JEROME

POST OFFICE BOX 335, JEROME, ARIZONA 86331
(928) 634-7943 FAX (928) 634-0715

Founded 1876
Incorporated 1899

STAFF SUMMARY REPORT

FROM:	Brett Klein, Town Manager/Clerk
ITEM:	**Item: Consider Proposal Agreement with Willdan to Provide a Water and Wastewater Rate Analysis and Update**
MEETING DATE:	November 10, 2026

Summary:

As a result of the WWTP bids coming in twice what the original estimates indicated, and the subsequent need for the Town to incur additional borrowing to complete the WWTP improvements, it is necessary to conduct an update to our water and wastewater rate analyses. This is both a requirement of the grant / loan from USDA and to conduct capital improvement and budget planning.

Dan Jackson of Willdan has completed the past several studies for the Town, and both the Council and staff have been pleased with the services rendered. Mr. Jackson is quite familiar with our system and fee structure, as well as having a strong familiarity with our local neighboring communities and municipalities throughout the State. Just a few years ago we solicited proposals for our initial rate analysis utilizing the engineer's opinion of probable cost. There were only two received as there are very few vendors in the entire southwest region of the United States that provide this service. Due to these facts, staff recommend a sole source procurement and engaging with Mr. Jackson of Willdan.

Fiscal Impact:

$18,000, all of which is eligible for reimbursement through USDA.

Recommendation:

Staff recommend approval and to start the analysis at Mr. Jackson's earliest convenience for planning purposes.

WILLDAN

October 1 2026

Mr. Brett Klein
Town Manager
Town of Jerome
600 Clark Street
Jerome AZ 86331

Re: Scope of Services and Letter Agreement to Provide Water and Wastewater Rate Analysis and Update

Dear Mr. Klein:

Willdan Financial Services ("Willdan") is pleased to present the following scope of services and budget to assist the Town of Jerome ("The Town") in providing a comprehensive water and wastewater rate study and long-term financial plan update. We are an economic and financial consulting firm, with offices in Plano, Texas and throughout the United States. Our principal clients are national, state and local governments. Our firm contains professionals with decades of experience in water and wastewater utility operations and economic/financial management.

As you are aware, our experience includes preparing over 300 similar studies for cities throughout Texas, Oklahoma, Arizona, the Southwest, the USA and the Pacific region. We have had the privilege of serving as the Town's rate consultant for the past five years.

Scope of Services

We want to ensure that our scope of services is responsive to the Town's needs. We will work with the Town to tailor our proposed scope based on input prior to approval of this letter agreement, and as needed during the course of the project. In the course of this engagement, we will perform the following specific tasks:

- A comparison of the Town's current rates to those of surrounding providers.
- A determination of the revenues required for the Town to meet its operating and capital obligations in the current year and future years.
- We will update our previously-prepared internationally-recognized water and wastewater cost of service and rate model to develop a customized ten-year utility cost of service for the Town's water and wastewater utilities using current budget, volume, debt service and capital improvement plan ("CIP") data. The model will identify current and forecast operating expenses, capital outlays and debt service for the period FY

2027 – 2036. The model will adhere to each respective utilities' industry ratemaking standards to ensure that the cost of service for each customer class is just, reasonable and accurate.

- The project team will prepare an updated proposed water and wastewater rate plan for the Town to consider. The proposal will enable the Town to recover sufficient revenues to fund operating and capital costs and to meet key financial objectives.

- The project team will summarize its initial findings and recommendations into a PowerPoint summary presentation for review with staff and the Town Council.

As part of this engagement, the project team will conduct the following meetings with Town staff:

- an initial meeting with staff to go over information required for the study
- a status/ preliminary recommendations meeting with staff to outline initial findings and answer questions raised during the course of the analysis;
- a workshop with Council to go over findings, recommendations and rate alternatives; and
- a final Council meeting at which the recommendations are voted upon by the Council.

As Principal in Charge for this engagement, I will have sole responsibility for its successful outcome. I will be assisted by Mr. John Moseley, Project Analyst.

Proposed Timing

The project team intends to have preliminary recommendations for staff within 90 days of receipt of all required data from Town staff.

Proposed Pricing

We propose to complete this study for a fixed fee of **$18,000**, to be invoiced monthly on a percentage of completion basis. Tasks or meetings considered to be outside the scope of this engagement will be discussed with Town Staff and additional work completed would be subject to staff approval and would be billed at our hourly rates.

Additional Services

Additional services may be authorized by the Town and will be billed at our then-current hourly overhead consulting rates. Our current hourly rates are:

RATE SCHEDULE | WFS 2025	
Vice President/Director	$ 310.00
Managing Principal	$ 300.00
Principal Consultant	$ 270.00
Senior Project Manager	$ 250.00
Project Manager	$ 210.00
Senior Project Analyst	$ 150.00
Senior Analyst	$ 135.00
Analyst II	$ 120.00
Analyst I	$ 110.00

Authorization

If the terms of this engagement are acceptable, please sign where indicated and email this letter back to our contracts supervisor:

Ms. Karen Checkon
Willdan Financial Services
5500 Democracy Drive, Ste. 130
Plano TX 75024
Ph. (972) 378-6588
E-mail: kcheckon@willdan.com

We appreciate this opportunity to serve the Town. If you have any questions regarding the proposed services, please contact me directly at (972) 378-6588 or via email at djackson@willdan.com.

Sincerely,

Willdan Financial Services

Dan V. Jackson, Vice President

October 1 2026
Date

Town of Jerome

Signature

Date

Print Name

ATTACHMENT 1 TO LETTER AGREEMENT

TERMS AND CONDITIONS

The Letter Agreement between Jerome ("Client") and Willdan Financial Services ("WFS") is subject to these Terms and Conditions (collectively, this "Agreement").

1. Additional Services. Additional services shall be performed by WFS only upon Client's request evidenced by a written addendum executed by both parties.

2. Compensation. WFS shall submit monthly statements for services. Payments shall be due and payable within 30 days of invoice and if not timely paid shall bear interest at the rate of 1.5% per month.

3. Termination. Either party may terminate this Agreement at any time upon 30 days' written notice. In the event of early termination, WFS shall be paid for services performed prior to the effective date of termination.

4. Data Provided by Client. WFS shall rely upon data provided by Client without independent verification of accuracy. WFS shall not be responsible for any errors resulting from its use of inaccurate data provided by Client.

5. Indemnification. Each Party shall indemnify the other from claims resulting from their respective negligence or other wrongful conduct or the negligence or other wrongful conduct of their respective officers, agents or employees.

6. Insurance. WFS shall maintain the following insurance:

a. Workers' Compensation and Employer's Liability Insurance as prescribed by applicable law.

b. Commercial General Liability Insurance, with limits not be less than $1,000,000 per occurrence and general aggregate.

c. Commercial Automobile Liability with limits not less than $1,000,000 per occurrence.

d. Professional Liability with limits not be less than $1,000,000 per claim and annual aggregate.

e. All policies except Professional Liability and Workers Compensation shall include Client as an additional insured and be primary with respect to any insurance carried by WFS. All policies shall include a waiver of subrogation in favor of Client.

f. WFS shall provide Client with certificates of insurance evidencing compliance with the above insurance requirements prior to commencing it services.

7. **Miscellaneous.**

a. Titles used in this Agreement are for general reference and are not a part of the Agreement.

b. This Agreement shall be interpreted as though prepared by both parties.

c. Any provision of this Agreement held to violate any law shall be deemed void, and all remaining provisions shall continue in full force and effect.

d. This Agreement shall be interpreted under the laws of the State of Texas.

e. This Agreement comprises a final and complete repository of the understandings between the parties and supersedes all prior or contemporary communications, representations or agreements, whether oral or written, relating to the subject matter of this Agreement.

f. Any notices given pursuant to this agreement shall be effective on the third business day after posting by first class mail, postage prepaid, to the address appearing immediately after the signatures below.

g. WFS shall not be liable for damages resulting from the actions or inactions of governmental agencies including, but not limited to, permit processing or environmental impact reports.

h. WFS's waiver of any term, condition, or covenant, or breach of any term, condition, or covenant, shall not constitute the waiver of any subsequent breach of any other term, condition or covenant.

i. WFS shall not responsible for the performance of services by third parties not retained by WFS.

j. Consultant shall receive reasonable adjustment for delays and costs incurred due to tariffs, or other similar acts of government.

8. Project Disclaimer

Client represents, acknowledges, and agrees that:

(i) Client uses the services of one or more municipal advisors registered with the U.S. Securities and Exchange Commission ("SEC") to advise it in connection with municipal financial products and the issuance of municipal securities;

(ii) Client is not looking to Willdan to provide, and client shall not otherwise request or require Willdan to provide, any advice or recommendations with respect to municipal financial products or the issuance of municipal securities (including any advice or recommendations with respect to the structure, timing, terms, and other similar matters concerning such financial products or issues);

(iii) The provisions of this proposal and the services to be provided hereunder as outlined in the scope of services are not intended (and shall not be construed) to constitute or include any municipal advisory services within the meaning of Section 15B of the U.S. Securities Exchange Act of 1934, as amended (the "Exchange Act"), and the rules and regulations adopted thereunder;

(iv) For the avoidance of doubt and without limiting the foregoing, in connection with any revenue projections, cash-flow analyses, feasibility studies and/or other analyses Willdan may provide client with respect to financial, economic or other matters relating to a prospective, new or existing issuance of municipal securities of client, (A) any such projections, studies and analyses shall be based upon assumptions, opinions or views (including, without limitation, any assumptions related to revenue growth) established by client, in conjunction with such of its municipal, financial, legal and other advisers as it deems appropriate; and (B) under no circumstances shall Willdan be asked to provide, nor shall it provide, any advice or recommendations or subjective assumptions, opinions or views with respect to the actual or proposed structure, terms, timing, pricing or other similar matters with respect to any municipal financial products or municipal securities issuances, including any revisions or amendments thereto; and

(v) Notwithstanding all of the foregoing, client recognizes that interpretive guidance regarding municipal advisory activities is currently quite limited and is likely to evolve and develop during the term of the potential engagement and, to that end, client will work with Willdan throughout the term of the potential Agreement to ensure that the Agreement and the services to be provided by Willdan hereunder, is interpreted by the parties, and if necessary amended, in a manner intended to ensure that client is not asking Willdan to provide, and Willdan is not in fact providing or required to provide, any municipal advisory services. Rate and Financial Planning Model.

File Attachments for Item:

F. Update on Procurement Officer's Response to the Formal Bid Protest and Supplement to the Formal Bid Protest from Technology Construction, Inc.

Council will review the Procurement Officer's response.

TECHNOLOGY CONSTRUCTION INC.

5430 Side Road, Prescott AZ 86301
928-777-0099 Office
928-777-8833 Fax

Thursday, October 1, 2026

Town Council of Jerome
c/o Brett Klein, Town Manager / Town Clerk
Town of Jerome
600 Clark Street (PO Box 335)
Jerome, AZ. 86331
Email: b.klein@jerome.az.gov

CC:
Taylor Pierce, PE, Sr. Project Manager
PACE | Advanced Water Engineering
Email: tpierce@pacewater.com

RE: Formal Bid Protest and Objection to Intent to Award

Project: Town of Jerome Wastewater Treatment Plant Improvements

Bidder: Technology Construction, Inc. (Low Bidder)

Dear Mayor and Members of the Jerome Town Council,

This letter serves as the formal Bid Protest of Technology Construction, Inc. (TCI) regarding the Town of Jerome's apparent intent to bypass TCI—the apparent low bidder—and award the contract for the Wastewater Treatment Plant Improvements project to Fann Contracting.

TCI is the lowest responsive and responsible bidder for this public project. Bypassing TCI on the claimed grounds that TCI's work experience with public and tribal entities was "unverifiable" is factually inaccurate, procedurally flawed, and contrary to Arizona public competitive bidding law.

I. STATEMENT OF FACTS

1. **Submission of Low Bid:** On June 1, 2026, TCI submitted a complete bid package for the Town of Jerome WWTP Improvements project, establishing TCI as the apparent low bidder.
2. **Bid Security & Validity Window:** In accordance with EJCDC C-410 Bid Form, Paragraph 7.01, bids remain subject to acceptance for **60 days** after the bid opening. TCI provided a valid Bid Bond (Penal Sum Form EJCDC C-430) executed by Everest National Insurance Company.
3. **Qualification Documentation & Resume Submission:** TCI submitted a comprehensive Statement of Qualifications with an audited financial report and a detailed corporate project history demonstrating over $100 million in completed civil, municipal, wastewater, and utility infrastructure projects across Arizona and the Southwest.
4. **Supplemental Reference Request:** Following initial review, PACE Water requested supplemental reference contacts on June 17th, 2026 for key trades, including concrete and piping

TECHNOLOGY CONSTRUCTION INC.
5430 Side Road, Prescott AZ 86301
928-777-0099 Office
928-777-8833 Fax

(Exhibit B-1). TCI promptly provided the requested supplemental contacts and reference details to PACE Water.

5. **Arbitrary Intent to Award:** On September 23, 2026—115 days after bid opening and well beyond the 60-day bid acceptance period—PACE Water notified TCI via email that the Town and USDA-RD were progressing toward an award to Fann Contracting (Exhibit B-2). When asked for justification, PACE Water stated on September 24, 2026, that it was *"unable to verify similar work experience"*.

II. GROUNDS FOR PROTEST

1. TCI is a Fully Qualified and Responsible Contractor

TCI possesses extensive, verified experience constructing and upgrading complex municipal wastewater treatment facilities and water infrastructure in Arizona and the Southwest. TCI's submitted project history includes, among others:

- **Lake Havasu City Island WWTP Flow Equalization Basin ($5,199,297):** Wastewater treatment plant construction.
- **Sells Lagoon & Sewer Main Improvement Project ($3,712,160):** Sewer lagoon and main upgrades.
- **Wickenburg Wastewater Treatment Plant ($404,737):** Belt press, building, and WWTP upgrades.
- **Chemehuevi HLR Lift Station #3 Renovation ($1,555,643):** New lift station, pumps, and electrical supply.

TCI has performed these and other public works projects for Arizona municipalities, tribal authorities, and ADOT. Declaring TCI's background "unverifiable" ignores public record documentation and TCI's direct performance history. The attached project reference table (Enclosure A) shows selected wastewater and utility projects and references.

2. Failure to Conduct Proper Due Diligence on Provided References

Following bid opening, PACE Water requested supplemental reference contacts for specific key project scopes, including concrete and piping. TCI promptly provided the requested supplemental contacts and reference details. Once supplemental reference data was requested and provided, the Town and PACE Water were obligated under public procurement standards to conduct reasonable, good-faith due diligence. Passing over the low bidder on the premise that experience was "unverifiable" without contacting the supplemental references provided—or without issuing a formal inquiry or cure notice—is arbitrary and procedurally invalid.

3. Violation of Arizona Competitive Bidding Statutes & Public Funds Protection

Under Arizona public contracting principles, public agencies must award contracts to the lowest responsive and responsible bidder to ensure the prudent expenditure of taxpayer and federal grant funds.

TECHNOLOGY CONSTRUCTION INC.

5430 Side Road, Prescott AZ 86301
928-777-0099 Office
928-777-8833 Fax

Bypassing the low bidder in favor of a higher bidder by over **$1,000,000** without issuing a formal, written finding of non-responsibility backed by verifiable evidence is arbitrary, capricious, and legally improper.

4. Expiration of Bid Acceptance Period & Improper Retention of Security

Under Paragraph 7.01 of the Bid Form, the Town's option window for bid acceptance is 60 days. The Town held TCI's bid security for over 115 days without declaring TCI non-responsive or returning its bond. Retaining a low bidder's bond while simultaneously bypassing them without formal cause violates both EJCDC terms and tenets of Arizona Fair Bidding practices.

III. REQUESTED RELIEF

Technology Construction, Inc. respectfully requests that the Town Council of Jerome and PACE Water take the following action:

1. **Stay Contract Award:** Immediately stay any formal contract execution or Notice to Proceed with Fann Contracting pending the formal resolution of this protest.
2. **Re-evaluate Low Bidder / Formal Findings:** Conduct a complete, good-faith review of TCI's submitted references and qualifications. In the event the Town maintains its position, TCI demands formal, written findings detailing the exact basis upon which TCI's references were determined to be "unverifiable."
3. **Award to Low Bidder:** Award the contract for the Jerome Wastewater Treatment Plant Improvements to Technology Construction, Inc. as the lowest responsive and responsible bidder.

Thank you for your prompt attention to this matter. We look forward to your written response.

Sincerely,



Michael H. Ottmann
President
Technology Construction, Inc.
5430 Side Road, Prescott, AZ. 86301
Office: 928-777-0099 | Email: mike@tciaz.net

Enclosures:

Enclosure A: Selected Wastewater & Utility Projects and Reference List
Exhibit B-1: Email Correspondence Regarding Supplemental Reference Requests (June 17, 2026)
Exhibit B-2: Email Correspondence with PACE Water Regarding Award Intent (Sept. 23-24, 2026)

Technology Construction, Inc.

Previous Project of Relevant Experience

Enclosure A

Project Name	Project Owner	Project Description	Project Value	Year Completed	Project Superintendent	Contact Person
Prescott Zone 41 Water Pump Station	City of Prescott	• New pump station building • New pumps • Piping • Electrical • Emergency generator • 750,000 gallon storage tank • Underground • Grading • Paving	$10,147,605	In Progress	Dave Cook	Tim Sherwood 928-777-1130 x5026
Lake Havasu City Island WWTP Flow Equalization Basin	Lake Havasu City	• New concrete flow equalization basin • New odor control system • Electrical	$5,199,297	2023	Dave Cook	Jason Hart 928-412-6758
Chemehuevi HLR Lift Station #3 Renovation	Chemehuevi / IHS	• New lift station • New sewage pumps • Electrical • Bypass pumping	$1,555,643	2022	Alberto Mendoza	Glen Lodge 760-858-4219 Allyn Rosetta 760-858-4219
Lake Havasu C-1 Booster Station	Lake Havasu City	• New Pumps • Electrical • Underground • Emergency Backup Generator • Grading	$3,018,009	2020	Dave Cook	Jason Hart 928-412-6758
Sells Lagoon & Sewer Main Improvement Project	Sells / IHS	• Lagoon expansion • New sewer mains	$3,712,160	2020	Alberto Mendoza	David Akakpo 928-669-3175 John Kathol 602-541-5636
Drying Bed Expansion	Fort Mohave	• New drying beds	$388,310	2018	Alberto Mendoza	
Davis Camp Lift Station	Kingman	• New sewage pumps	$103,478	2018	Alberto Mendoza	
Section Ten WWTP	Bullhead City	• Pipe • Electrical • Mechanical	$684,718	2017	Alberto Mendoza	
Mullbery WWTP Basin	Lake Havasu City	• Dredging • New basin lining	$860,000	2016	Jim Snider	Jason Hart 928-412-6758
Wickenburg WWTP	Town of Wickenburg	• New belt press • New building	$404,737	2012	Dave Cook	

Havasupai WWTP Lagoons	Havasupai Tribe / IHS	• Grading • New pond liners • Piping	$830,000	2010	Mike Ottmann	John Kathol 602-541-5636 David Akakpo 928-669-3175
Fountain Hills Lift Station	Fountain Hills	• New lift station • New sewage pumps • Piping	$2,900,000	2009	Dave Cook	
Chemehuevi WWTP	Chemehuevi / IHS	• Asphalt paving • Modified 6 wastewater ponds • New lift station • Electrical • New 6000 LF of 14" force main	$3,500,000	2005	Mike Ottmann	Glen Lodge 760-858-4219 Allyn Rosetta 760-858-4219
Buckeye WWTP	City of Buckeye	• New lift station • New drying beds • Clarifier • Drying press • Splitter box • Electrical • Underground	$1,800,000	2005	Dave Cook	
Hon-Dah WWTP	White River / IHS	• Concrete structures • New ponds and liners • UV treatment • Piping • Electrical • Wiers • Grading	$2,900,000	2004	Mike Ottmann	John Kathol 602-541-5636 David Akakpo 928-669-3175
City of Tombstone WWTP	City of Tombstone	• 1 million gallons per day • Headworks • Drying beds • New tanks • New pumps • Piping • Concrete • Grading	$1,500,000	2003	Dave Cook	
Kykotsmovi WWTP	Pollaca / IHS	• 400,000 gallons per day • Excavation • Concrete structures • Piping • New liners • Grading • Gabions & rip-rap	$1,600,000	2002	Mike Ottmann	John Kathol 602-541-5636 David Akakpo 928-669-3175

Technology Construction, Inc

Reference Contact Information

Name	Phone Number	Email	Type of Work
Elisabeth Whitlock	435-767-8481	ewhitlock@highroadengineering.com	• Concrete structures • Site grading • Underground •
Jason Hart	928-854-0789 928-412-6758	hartj@lhcaz.gov	• Wastewater treatment plants • Underground • Electrical • Pumps •
Tim Sherwood	928-777-1130 x5026	tim.sherwood@prescott-az.gov	• Water pump stations • Underground • Electrical • Pumps • Concrete structures •
David Akakpo	928-669-3175	david.akakpo@ihs.gov	• Wastewater treatment plants • Lift stations • Underground • Electrical • Pumps
Joe Engelke	928-637-0850	joe.engelke@azdema.gov	• Structural Steel
Hien Nguyen	928-681-6051	hnguyen3@azdot.gov	• Paving • Grading • Concrete • Electrical

Nigel Knoy Exhibit B-1

From: Taylor Pierce <tpierce@pacewater.com>
Sent: Wednesday, June 17, 2026 10:56 AM
To: estimator3@live.com
Cc: 'Mike Ottman'; evan@tciaz.net
Subject: RE: Jerome WWTP

Will do. I'll let you know if I need anything further.

Taylor Pierce, PE
Sr. Project Manager
D (480) 991-3595 | C (602) 540-2727
E tpierce@pacewater.com - vcard

PACE | Advanced Water Engineering
www.pacewater.com

Over 30 Years of Innovation in Partnership with Nature

From: Ron Crites <estimator3@live.com>
Sent: Wednesday, June 17, 2026 10:53 AM
To: Taylor Pierce <tpierce@pacewater.com>
Cc: 'Mike Ottman' <mike@tciaz.net>; evan@tciaz.net
Subject: RE: Jerome WWTP

Hi Taylor. Please Contact the Persons attached. Pease feel free to Request Additional References. Thanks, Ron.

Jason Hart
Lake Havasu City
Project Manager

(928) 854-0789 Work
(928) 412-6758 Mobile
hartj@lhcaz.gov
Lake Havasu City, AZ

Joe Engelke
928 637 0850

928-607-1599 Mobile
joe.engelke@azdema.gov

David Bradley
City of Prescott AZ
Capital Projects Manager

(928) 777-1636 Work
david.bradley@prescott-az.gov

433 N. Virginia
Prescott, AZ 86301

Elisabeth Whitlock
CIVIL ENGINEERING & CONSULTING
President

(435) 767-8481 Work
ewhitlock@highroadengineering.com

PO Box 97
St. George, UT 84771

Hien Nguyen
ADOT Kingman District
Resident Engineer

(928) 681-6051 Work
(928) 249-4424 Mobile
hnguyen3@azdot.gov
3664 E. Andy Devine Ave,
Kingman AZ 86401

Ron Crites
Technology Construction Inc.
5430 Side Road
Prescott, Arizona 86301
928-777-0099 Office
928-777-8833 FAX
928-533-0715 Mobile
928-223-3980 Direct Ext 1
estimator3@live.com
ron@tciaz.net

From: Taylor Pierce <tpierce@pacewater.com>
Sent: Wednesday, June 17, 2026 10:29 AM
To: Ron Crites <estimator3@live.com>
Cc: 'Mike Ottman' <mike@tciaz.net>; evan@tciaz.net
Subject: RE: Jerome WWTP

Thanks Ron. Do you by chance have any other references than the list provided in your bid? I have had a hard time getting in contact with some of them – particularly references for piping, concrete or general wastewater projects. Let me know.

Taylor Pierce, PE
Sr. Project Manager
D (480) 991-3595 | C (602) 540-2727
E tpierce@pacewater.com - vcard

PACE | Advanced Water Engineering
www.pacewater.com

Over 30 Years of Innovation in Partnership with Nature

From: Ron Crites <estimator3@live.com>
Sent: Monday, June 15, 2026 9:50 AM
To: Taylor Pierce <tpierce@pacewater.com>
Cc: 'Mike Ottman' <mike@tciaz.net>; evan@tciaz.net
Subject: Jerome WWTP

Hi Taylor. I've received no usable data for material cost increases. However, we don't expect the increase to be over $750,000 +- Thanks, Ron.

Ron Crites
Technology Construction Inc.
5430 Side Road
Prescott, Arizona 86301
928-777-0099 Office
928-777-8833 FAX
928-533-0715 Mobile
928-223-3980 Direct Ext 1
estimator3@live.com
ron@tciaz.net

TECHNOLOGY CONSTRUCTION INC.

Nigel Knoy Exhibit B-2

From: Taylor Pierce <tpierce@pacewater.com>
Sent: Thursday, September 24, 2026 2:23 PM
To: estimator3@live.com
Cc: Mike Ottmann
Subject: RE: Jerome Wastewater Treatment Plant

We were unable to verify similar work experience.

Taylor Pierce, PE
Sr. Project Manager
D (480) 991-3595 | C (602) 540-2727
E tpierce@pacewater.com - vcard

PACE | Advanced Water Engineering
www.pacewater.com

Over 30 Years of Innovation in Partnership with Nature

From: Ron Crites <estimator3@live.com>
Sent: Thursday, September 24, 2026 5:36 AM
To: Taylor Pierce <tpierce@pacewater.com>
Cc: Mike Ottmann <mike@tciaz.net>
Subject: RE: Jerome Wastewater Treatment Plant

Hi Tyler, we were the low bid. Why the award to Fann? Ron.

Ron Crites
Technology Construction Inc.
5430 Side Road
Prescott, Arizona 86301
928-777-0099 Office
928-777-8833 FAX
928-533-0715 Mobile
928-223-3980 Direct Ext 1
estimator3@live.com
ron@tciaz.net

TECHNOLOGY CONSTRUCTION INC.

From: Taylor Pierce <tpierce@pacewater.com>
Sent: Wednesday, September 23, 2026 6:23 PM
To: Ron Crites <estimator3@live.com>

Cc: Mike Ottmann <mike@tciaz.net>
Subject: Re: Jerome Wastewater Treatment Plant

Hi Ron,

Thanks for checking in. The Town and USDA are in the final steps of awarding the project to Fann. The award has not yet been finalized, and we will provide formal notification once the process is complete.

Taylor Pierce, PE
Sr. Project Manager
D (480) 991-3595 | **C** (602) 540-2727
E tpierce@pacewater.com - vcard

PACE | Advanced Water Engineering
www.pacewater.com

Over 30 Years of Innovation in Partnership with Nature

On Sep 16, 2026, at 7:23 AM, Ron Crites <estimator3@live.com> wrote:

<image001.jpg>
Hi Taylor. Are there any updates to the Jerome WWTP project? Our bond will expire on September 29th. Thank, Ron.

Ron Crites
Technology Construction Inc.
5430 Side Road
Prescott, Arizona 86301
928-777-0099 Office
928-777-8833 FAX
928-533-0715 Mobile
928-223-3980 Direct Ext 1
estimator3@live.com
ron@tciaz.net

<image002.jpg>

File Attachments for Item:

G. Consider Approval of a Water Infrastructure Easement Agreement between the Town and Freeport Minerals Corporation, and Authorizing the Town Manager or Mayor to Take the Necessary Steps to Execute the Agreement, Pending Town Attorney Approval of Form

Council will consider and may approve the Water Infrastructure Easement Agreement.

TOWN OF JEROME

VERDE CENTRAL WATERLINE EASEMENT EXHIBIT

SITUATED IN THE TOWN OF JEROME
YAVAPAI COUNTY, ARIZONA

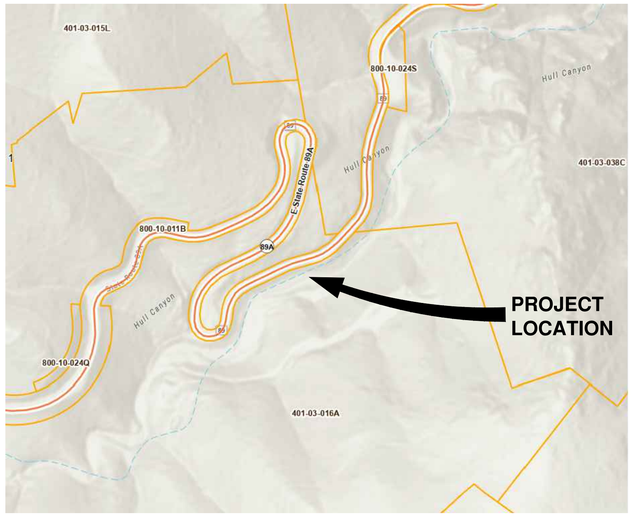

VICINITY MAP
NOT TO SCALE

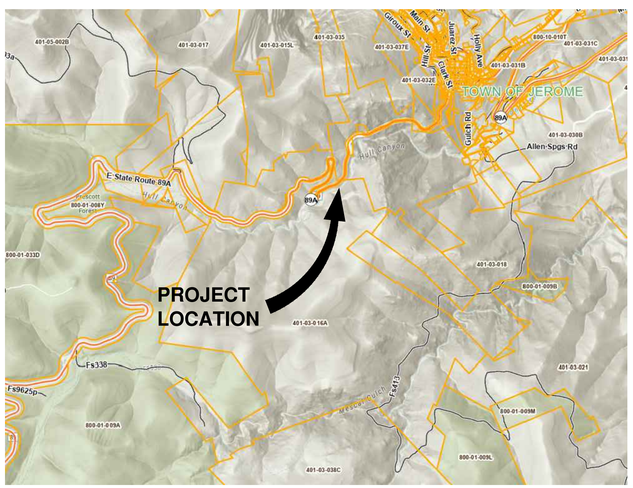

LOCATION MAP
NOT TO SCALE

CONTACT INFORMATION

OWNER/ DEVELOPER	BRETT KLEIN
CONTACT	TOWN OF JEROME 600 CLARK ST PO BOX 335 JEROME, AZ 86331 (928) 634-7943
ENGINEER	SEC, INC. 825 COVE PARKWAY, SUITE A COTTONWOOD, ARIZONA 86326 (928) 634-5889 FAX: (928) 282-0731 REGISTRATION NUMBERS: P.E. 49109, R.L.S. 40829 CONTACT: KRISHAN GINIGE

SHEET LIST	
#	SHEET TITLE
1	COVER
2	PROPOSED WATER LINE
3	P&P STA 0+00 - 2+00
4	P&P STA 2+00 - 4+00
5	P+P STA 4+00 - 5+90

PRELIMINARY NOT FOR CONSTRUCTION.

Registered Professional Engineer (USA) CERTIFICATE NO. 49109 KRISHAN GEVINDA GINIGE 10/09/25 ARIZONA U.S.A.

PRELIMINARY

TOWN OF JEROME VERDE CENTRAL WATERLINE EASEMENT EXHIBIT	
SEC Inc.	COVER

825 COVE PARKWAY
COTTONWOOD, AZ 86326
928-282-7787

DATE	DRAWN	SHEET
10/09/25	RIN	1 OF 5
SCALE	CHECKED	PROJECT NO.
AS-SHOWN	KG	25-0403CE

© 2026, SEC, Inc., All Rights Reserved. This document is protected under the United States Copyright Act. No part may be reproduced in any form or by any means or stored in a database or retrieval system, without the prior written permission of SEC, Inc. These plans/documents have been prepared using technical knowledge that should be applied by others qualified registrants who practice the same or similar profession. Reasonable efforts have been made to be as accurate as possible. However, plans/documents could contain unintentional technical inaccuracies, typographical errors or omissions. Users of these plans/documents should understand that it is unlawful to reuse this plan/document, project or portions thereof by any party other than the author of this plan/document, project or portions thereof without the express written consent of SEC, Inc. and any unauthorized use will occur in any

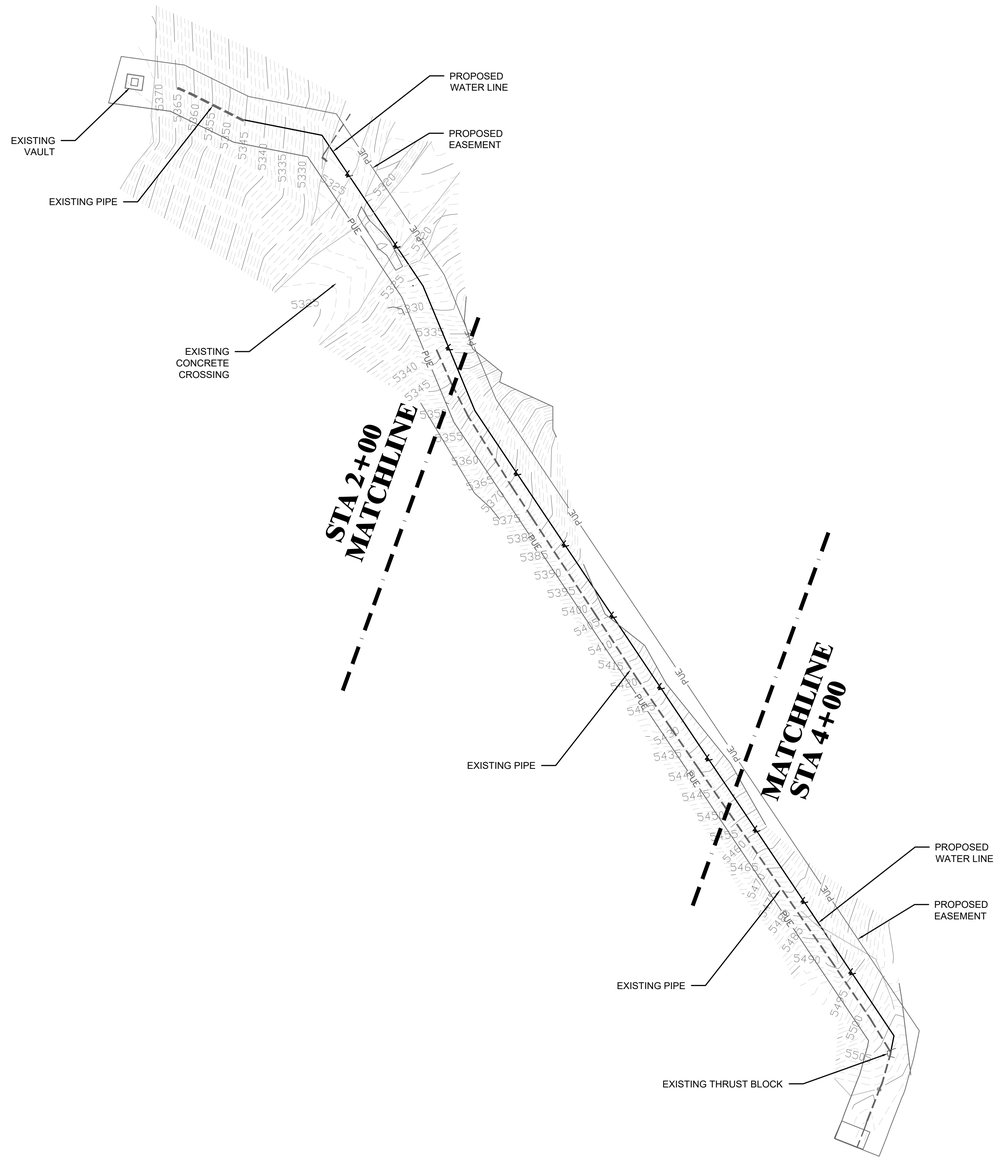

SUMMARY

LENGTH OF PIPE = 588.5 FOOT

WIDTH OF REQUESTED EASEMENT = 20'

AREA = 11,770 SQ.FT. (0.27 ACRES)



PRELIMINARY NOT FOR CONSTRUCTION.

TOWN OF JEROME

VERDE CENTRAL WATERLINE EASEMENT EXHIBIT

PROPOSED WATER LINE

Professional Engineer
CERTIFICATE NO.
49109
KRISHAN GEVINDA GINIGE
10/09/25
ARIZONA U.S.A.

PRELIMINARY

SEC Inc.

825 COVE PARKWAY
COTTONWOOD, AZ 86326
928-282-7787

DATE	DRAWN	SHEET
10/09/25	RIN	2 OF 5
SCALE	CHECKED	PROJECT NO.
AS-SHOWN	KG	25-0403CE

© 2026, SEC, Inc., All Rights Reserved. This document is protected under the United States Copyright Act. No part may be reproduced in any form or by any means or stored in a database or retrieval system, without the prior written permission of SEC, Inc. These plans/documents have been prepared using technical knowledge that would be applied by other qualified registerants who practice the same profession in the same area and at the same time. Efforts have been made to be as accurate as possible. However, plans/documents could contain unintentional technical inaccuracies, typographical errors or omissions. Users of these plans/documents should understand this. It is highly probable that errors and omissions will occur in any plan/document preparation process.

S:\land projects 2004 Engineering\23-0102CE Jerome Miscellaneous Work\Verde Central\25-0403CE-ESMT-EXHIBIT.dwg

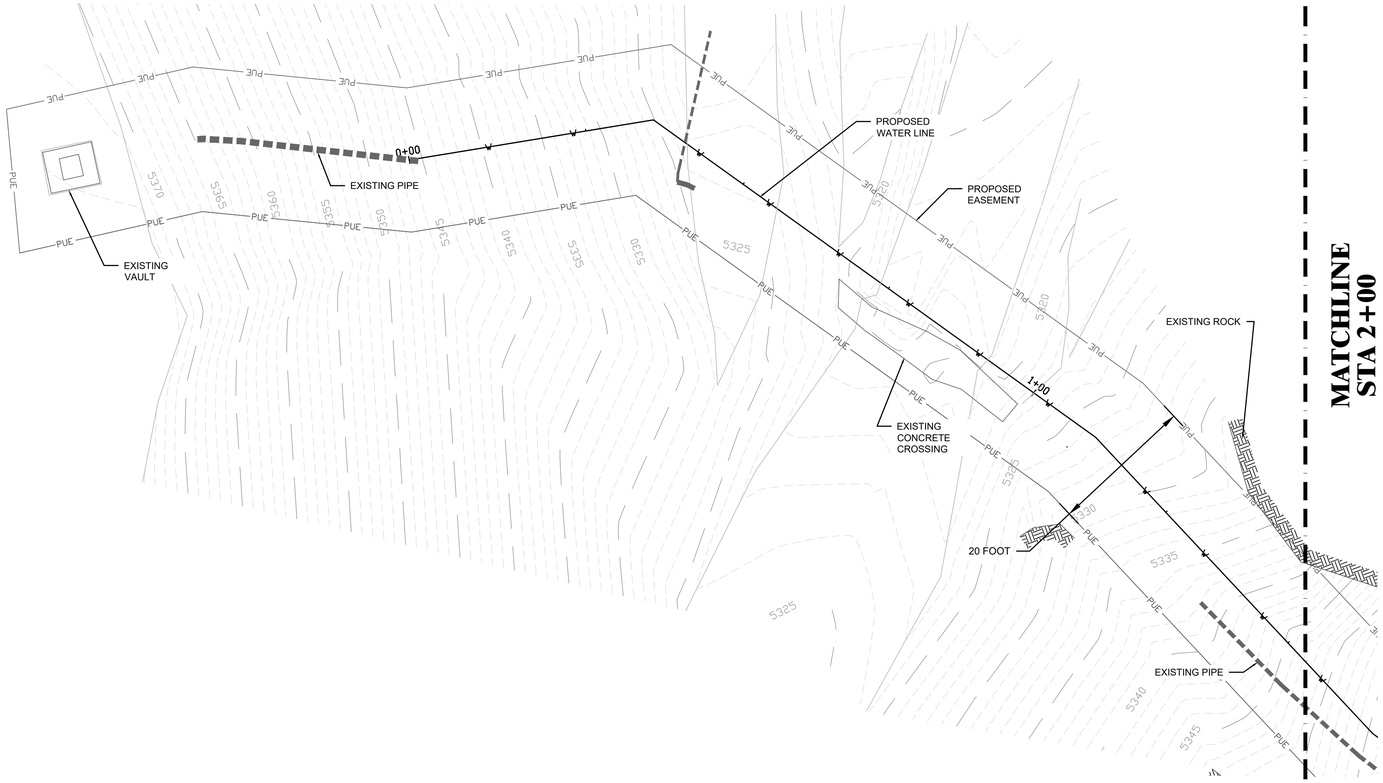

MATCHLINE
STA 2+00

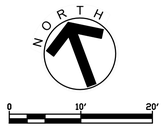

PRELIMINARY NOT FOR CONSTRUCTION.

Registered Professional Engineer, State of Arizona
CERTIFICATE NO.
49109
KRISHAN
GEVINDA
GINIGE
10/09/26
DATE SIGNED
U.S.A.

PRELIMINARY

TOWN OF JEROME
VERDE CENTRAL WATERLINE EASEMENT EXHIBIT

SEC Inc.
825 COVE PARKWAY
COTTONWOOD, AZ 86326
928-282-7787

P&P STA 0+00 – 2+00

DATE	DRAWN	SHEET
10/09/25	RIN	3 OF 5
SCALE	CHECKED	PROJECT NO.
AS-SHOWN	KG	25-0403CE

© 2026, SEC, Inc., All Rights Reserved. This document is protected under the United States Copyright Act. No part may be reproduced in any form or by any means or stored in a database or retrieval system, without the prior written permission of SEC, Inc. These plans/documents have been prepared using technical knowledge that would be applied by other qualified registrants who practice the same profession in the same area and at the same time. Efforts have been made to be as accurate as possible. However, plans/documents could contain unintentional technical inaccuracies, typographical errors or omissions. Users of these plans/documents should understand that it is highly probable that errors and omissions will occur in any plan/document preparation process.

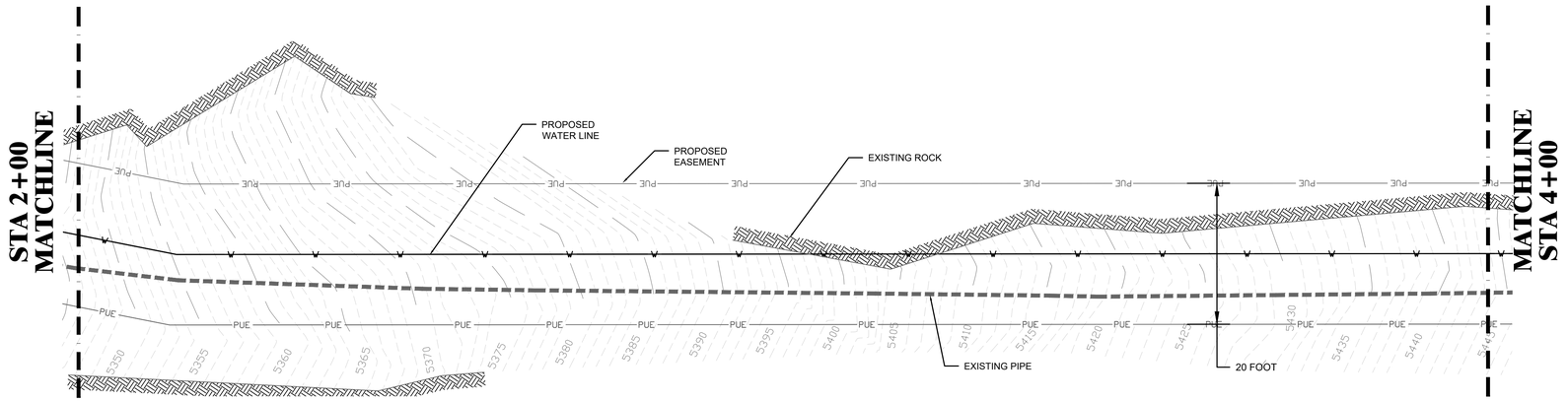

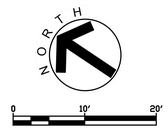

PRELIMINARY NOT FOR CONSTRUCTION.

Registered Professional Engineer (Civil)
CERTIFICATE NO.
49109
KRISHAN
GEVINDA
GINIGE
10/09/26
DATE SIGNED
ARIZONA, U.S.A.

PRELIMINARY

TOWN OF JEROME
VERDE CENTRAL WATERLINE EASEMENT EXHIBIT

SEC Inc.

825 COVE PARKWAY
COTTONWOOD, AZ 86326
928-282-7787

P&P STA 2+00 – 4+00

DATE	DRAWN	SHEET
10/09/25	RIN	4 OF 5
SCALE	CHECKED	PROJECT NO.
AS-SHOWN	KG	25-0403CE

S:\land projects 2004 Engineering\23-0102CE Jerome Miscellaneous Work\Verde Central\25-0403CE-ESMT-EXHIBIT.dwg

© 2026, SEC, Inc., All Rights Reserved. This document is protected under the United States Copyright Act. No part may be reproduced in any form or by any means or stored in a database or retrieval system, without the prior written permission of SEC, Inc. These plans/documents have been prepared by other qualified professionals who practice in the same area and at the same time. Efforts have been made to be as accurate as possible. However, plans/documents could contain unintentional technical inaccuracies, typographical errors or omissions. There is always a possibility that errors and omissions will occur in any plans/documents preparation process.

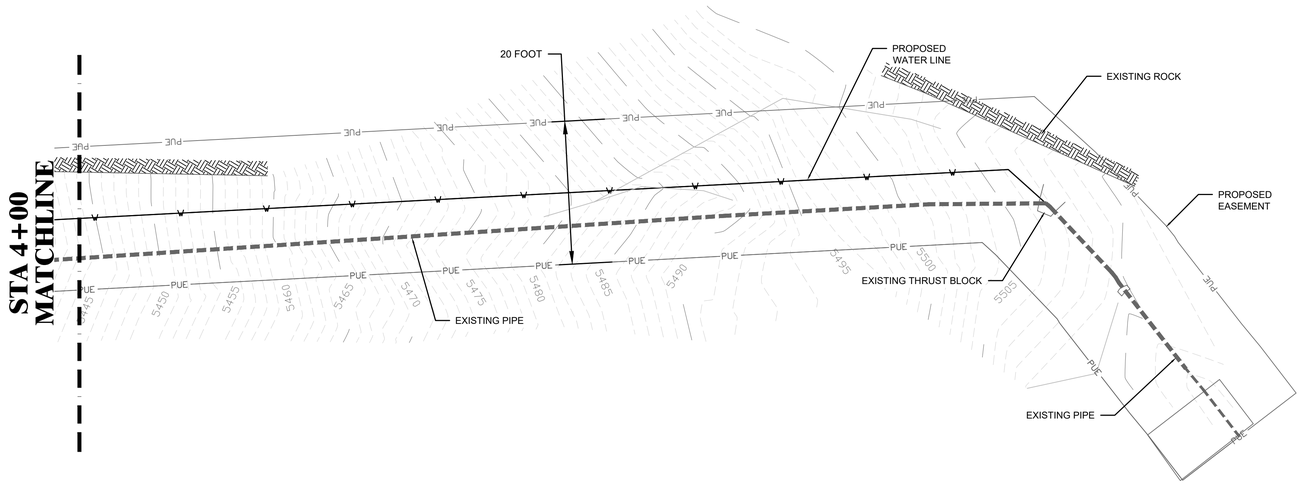

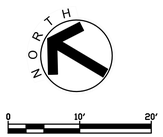

PRELIMINARY NOT FOR CONSTRUCTION.

TOWN OF JEROME
VERDE CENTRAL WATERLINE EASEMENT EXHIBIT

Registered Professional Engineer (Civil)
CERTIFICATE NO.
49109
KRISHAN
GEVINDA
GINIGE
DATE SIGNED
10/09/26.
ARIZONA, U.S.A.

PRELIMINARY

SEC Inc.

825 COVE PARKWAY
COTTONWOOD, AZ 86326
928-282-7787

P+P STA 4+00 – 5+90

DATE	DRAWN	SHEET
10/09/25	RIN	5 OF 5
SCALE	CHECKED	PROJECT NO.
AS-SHOWN	KG	25-0403CE

© 2026, SEC, Inc., All Rights Reserved. This document is protected under the United States Copyright Act. No part may be reproduced in any form or by any means or stored in a database or retrieval system, without the prior written permission of SEC, Inc. These plans/documents have been prepared using technical knowledge that could be applied by other qualified engineers who practice in the same area and at the same time. However, plans/documents could contain unintentional technical inaccuracies, typographical errors or omissions. Users of these plans/documents should understand that it is highly probable that errors and omissions will occur in any plan/document preparation process.

S:\land projects 2004 Engineering\23-0102CE Jerome Miscellaneous Work\Verde Central\25-0403CE-ESMT-EXHIBIT.dwg

PRELIMINARY

LEGAL DESCRIPTION
PUBLIC UTILITIES EASEMENT

A parcel of land located in Section 27, Township 16 North, Range 2 East of the Gila and Salt River Meridian, Yavapai County, Arizona, being a strip of land 20 feet wide lying 10 feet on each side of the following described centerline:

Beginning at a point that lies South 66°14'55" West a distance of 5.75 feet from the northwest corner of an existing water box, with said northwest corner having a Grid North value of 1361284.1410 and a Grid East value of 638478.9510 (Arizona State Plane Coordinate System, Central Zone, International Feet, NAD 83),

Thence, South 82°17'27" East, used as the **Basis of Bearings** for this description, a distance of 26.45 feet to a point;

Thence, South 63°55'05" East a distance of 29.71 feet to a point;

Thence, South 78°50'07" East a distance of 34.58 feet to a point;

Thence, South 33°50'07" East a distance of 76.07 feet to a point;

Thence, South 22°35'07" East a distance of 56.70 feet to a point;

PRELIMINARY

Thence, South 33°50'07" East a distance of 315.50 feet to a point;

Thence, South 11°28'45" West a distance of 7.07 feet to a point;

Thence, South 15°23'51" West a distance of 13.35 feet to a point;

Thence, South 21°19'29" West a distance of 29.05 feet and the **Terminus** of said centerline, with sidelines extended or trimmed on the southeasterly line of State Route 89A Right of Way.

The description hereon was prepared by SEC Inc. on October 30, 2026.

SEC Inc. and the registrant cited below will not be responsible for errors committed by others if this description is not reproduced in its entirety exactly as written above including this disclaimer. No liability is accepted for misuse or assumptions made by unauthorized users.

The description above is graphically depicted in the Exhibit attached hereto and made a part hereof without which this document is to be considered incomplete.

The author of this description is Mark J. Farr RLS 40829.

EXHIBIT
PUBLIC UTILITIES EASEMENT

A PORTION OF THE NORTH HALF OF SECTION 27, T.16N., R.2E., GILA & SALT RIVER MERIDIAN, YAVAPAI COUNTY, ARIZONA

STATE ROUTE 89A
ADOT PROJECT NO. S-366-815

SEE DETAIL "A"

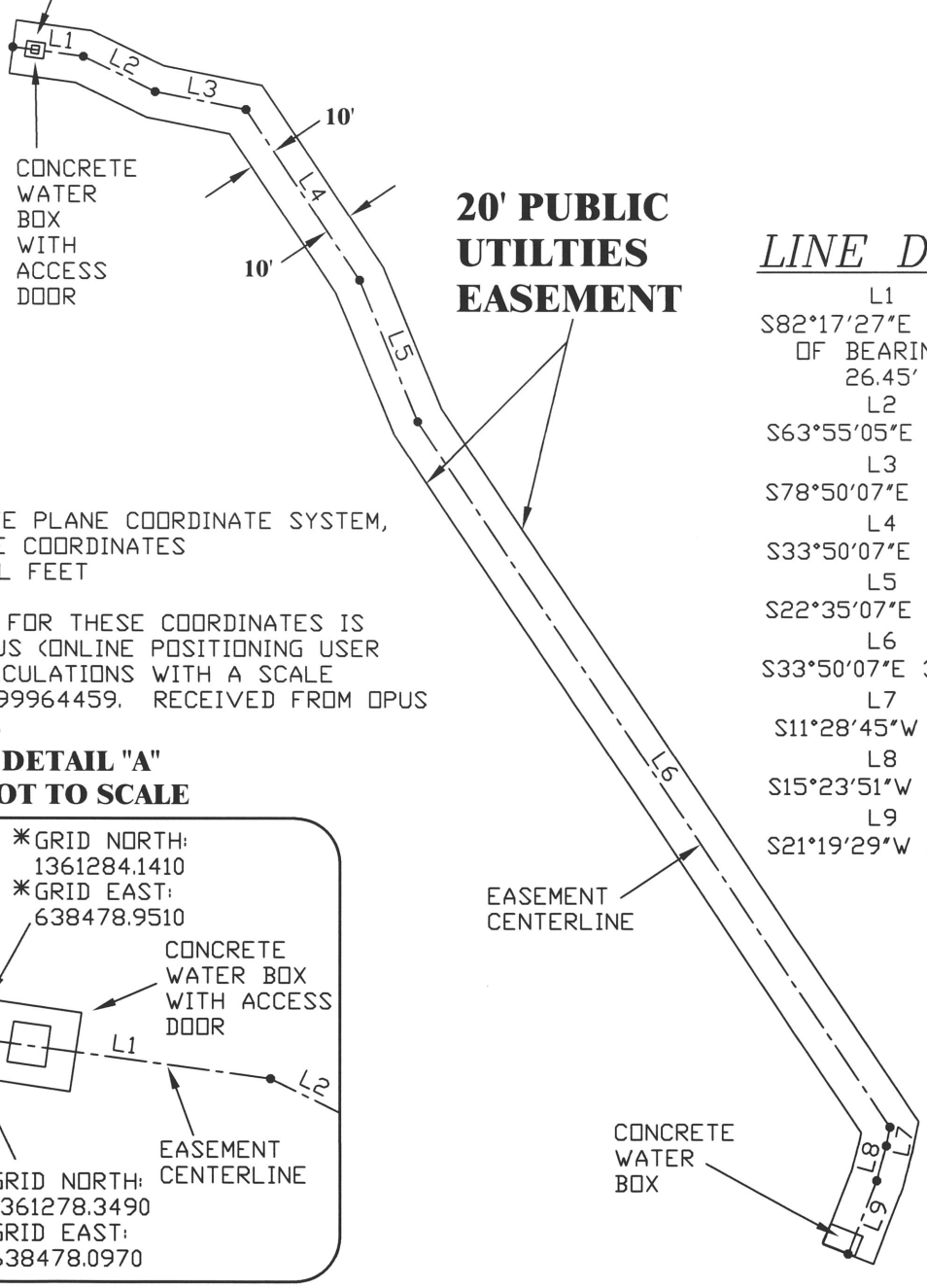

LINE DATA

L1
S82°17'27"E BASIS OF BEARINGS
26.45'
L2
S63°55'05"E 29.71'
L3
S78°50'07"E 34.58'
L4
S33°50'07"E 76.07'
L5
S22°35'07"E 56.70'
L6
S33°50'07"E 315.50'
L7
S11°28'45"W 7.07'
L8
S15°23'51"W 13.35'
L9
S21°19'29"W 29.05'

*GRID AZIMUTHS ARE ARIZONA STATE PLANE COORDINATE SYSTEM, CENTRAL ZONE COORDINATES INTERNATIONAL FEET NAD 83 SOURCE DATA FOR THESE COORDINATES IS BASED ON OPUS (ONLINE POSITIONING USER SERVICE) CALCULATIONS WITH A SCALE FACTOR OF 0.99964459. RECEIVED FROM OPUS MAY 27, 2025.

DETAIL "A"
NOT TO SCALE

VICINITY MAP
NOT TO SCALE

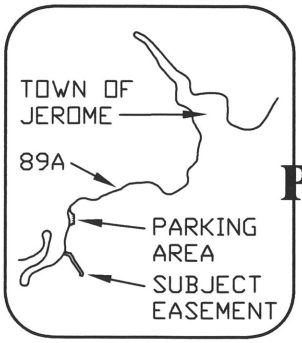



PRELIMINARY

TOWN OF JEROME			
SEC Inc. 825 COVE PARKWAY, SUITE A COTTONWOOD, ARIZONA 86326 (928) 634-5889 www.sec-landmgt.com	EXHIBIT SECTION 27 T.16N., R.2E.		
	DATE 10/30/26	DRAWN B.L.S.	PAGE 3 OF 3
	SCALE NONE	CHECKED M.J.F.	23-0102CE Town Jerome "Exhibit PUE.dwg"

When Recorded, Mail to:

Freeport Minerals Corporation
c/o Land & Water
4340 E. Cotton Center Blvd. #110
Phoenix, AZ 85040

WATER INFRASTRUCTURE EASEMENT AGREEMENT

THIS WATER INFRASTRUCTURE EASEMENT AGREEMENT ("**Agreement**") is made this ___ day of _____, 2026 (the "**Effective Date**"), by and between **Freeport Minerals Corporation,** a Delaware corporation ("**Grantor**"), and **Town of Jerome,** a municipal corporation of the State of Arizona ("**Grantee**").

AGREEMENT

Subject to the terms and conditions set forth herein and for other good and valuable consideration, the receipt and sufficiency of which is hereby acknowledged, the parties hereto state, confirm and agree as follows:

1. Grant of Easement.

Grantor hereby grants to Grantee a non-exclusive easement, solely for the purpose of constructing, operating, maintaining, repairing, replacing and removing a municipal water line and related facilities necessary to operate and maintain said water line (the "**Improvements**") under and on the surface of the real property described on Exhibit "A" attached hereto and made a part hereof (the "**Easement Property**"), together with the right of reasonable ingress and egress to, from and over the Easement Property, in each case utilizing existing roads. Notwithstanding anything to the contrary in this Agreement, the non-exclusive easement granted hereby is strictly limited to an existing potable water line located within the area described and depicted in Exhibit "A", attached hereto and incorporated herein by this reference, and such easement shall not be used for redundant water lines, sewer infrastructure, third-party utilities, or any other use whatsoever. Grantee's employees and contractors (each a "**Grantee Party**" or, collectively with Grantee, the "**Grantee Parties**") shall have access to the Easement Property for the purpose of constructing, operating, maintaining, repairing, replacing and removing the Improvements. Grantee may trim, prune, or remove any trees or shrubs located over, upon or under the Easement Property that, in the judgment of Grantee, may interfere with the construction or endanger the operation of the Improvements.

2. Grantor's Reservation.

Grantor reserves for its benefit and the benefit of its successors and assigns, to run with and bind the Easement Property, the perpetual privilege and right to:

a) use and occupy the Easement Property for any and all purposes, including, without limitation, ingress and egress, the operation, maintenance, construction, relocation, or repair of any other utilities on the Easement Property, and the placement of any structures upon and within the Easement Property, including but not limited to groundwater extraction and monitor wells;

b) all mineral and water rights, including the right to access and extract these, upon reasonable notice to Grantee; and

c) release and discharge dust, sand, tailings, dirt, noises and vibrations from mines, dumps, and other facilities located on lands now or hereafter owned by Grantor, its successors and assigns, adjacent to or in the vicinity of the Easement Property, and to allow and permit such dust, sand, tailings, dirt, noises, vibrations to be carried over, through and across the Easement Property, either by wind, water, air currents or otherwise.

If Grantor's exercise of its reserved rights impairs or interferes with Grantee's operation of the Improvements or otherwise unreasonably interferes with Grantee's use of the Easement Property, or creates a safety hazard, Grantor's exercise of its reserved rights shall be handled as a request for the Improvements to be relocated pursuant to Section 3, below. In order to avoid interruption in Grantee's service to its residents, Grantor will notify Grantee in writing in advance of any actions which it reasonably anticipates will affect, impair, or interfere with Grantee's Improvements and/or use of the Easement Property and, if appropriate, will include in such notice a request to Grantee to relocate the Improvements pursuant to Section 3.

3. Relocation of Easement.

Grantor reserves the right to reasonably require Grantee to relocate the Improvements to another area of Grantor's property (for which a new easement shall be granted), selected by the mutual agreement of Grantor and Grantee. Grantor shall provide Grantee with six (6) months prior written notice of Grantor's desire to exercise this right. If Grantor requires Grantee to relocate the Improvements at any time within ten (10) years after the Effective Date, Grantor shall be responsible for all reasonable costs incurred by Grantee in connection with such relocation. If Grantor requires Grantee to relocate the Improvements at any time between ten (10) and twenty (20) years after the Effective Date, Grantor and Grantee shall share equally all reasonable costs incurred by Grantee in connection with such relocation. If Grantor requires Grantee to relocate the Improvements at any time twenty (20) years or more after the Effective Date, Grantee shall be responsible for all costs incurred by Grantee in connection with such relocation.

4. No Implied Rights; No Representations or Warranties.

Notwithstanding anything herein to the contrary with respect to the Easement Property, Grantor makes no representations or warranties, express or implied, including representations as to the accuracy or completeness of the information shown on the Exhibits attached hereto (other than information related to the location of the Easement Property), and Grantee agrees to accept and use the Easement Property in **"AS IS" "WHERE IS"** and **"WITH ALL FAULTS"** condition and to bear all risks associated with the Improvements and the condition of the Easement Property. Grantee is entering into this Agreement and shall use the Easement Property based on Grantee's inspection and investigation of all matters pertaining thereto and not in reliance on any representation, warranty (including, without limitation, warranties of title or fitness for a particular purpose) or agreement of Grantor. Grantee agrees that the Improvements and the Easement Property are subject to all existing easements, rights-of-way and other rights, including, without limitation, all matters of record and all matters that can be disclosed by a physical inspection and survey of the Easement Property.

5. Duties and Obligations of Grantee.

Grantee shall exercise, and assure Grantee Parties exercise, reasonable care in its use of the Easement Property and shall, at the expense of Grantee, regularly inspect, maintain, repair and keep the Easement Property and the Improvements, in a good, safe, secure, clean and workmanlike condition. Grantee shall comply, and assure Grantee Parties comply, with all applicable laws, rules and regulations, now in force and hereafter enacted, including, without limitation, all environmental, safety and health related laws and regulations, in connection with its use of the Improvements and Easement Property. Grantee shall repair or restore, at its expense, any damage or disturbance to the Easement Property or any of Grantor's surface aesthetics, drainage facilities, and other fixtures or improvements thereon resulting from Grantee's construction, maintenance, repair, replacement or removal of the Improvements on

the Easement Property. Grantee agrees to provide Grantor with a copy of all plans and specifications for any Improvements constructed within the Easement Property, for Grantor's review and approval, which approval shall not be unreasonably withheld, as well as an "as built" map or survey of the Improvements following the completion thereof. In addition, Grantee shall obtain all necessary government approvals and permits required for the installation and use of the Improvements, at Grantee's sole cost and expense. To the extent necessary, Grantor shall reasonably cooperate with Grantee, at Grantee's sole cost and expense, in obtaining the necessary approvals and permits. As an additional condition of installing any new subsurface Improvements, Grantee shall install tracer wire for future locating/blue stake purposes.

6. No Liens.

Grantee shall at all times keep and maintain the Easement Property free and clear of any and all liens, claims, demands, obligations, liabilities and causes of action (each a "**Claim**") arising out of or in any manner relating to any work, including construction and installation of the Improvements and maintenance and repair work, performed on the Easement Property for or on behalf of Grantee or arising out of the use of the Easement Property by any Grantee Parties. If any Claim is filed, asserted or made on, against or with respect to the Easement Property as a result of any of such work or use, Grantee shall cause such Claim to be dismissed, released, and discharged therefrom no later than ten (10) days thereafter or commence proceedings to dismiss, release and discharge within ten (10) days thereafter and diligently pursue such proceedings until completed. If Grantee does not dismiss, release or discharge (by bonding or otherwise) the Claim within thirty (30) days thereafter, Grantor may pay, discharge or compromise the Claim in its reasonable discretion and regardless of Grantee's defenses or counterclaims provided that no admissions, representations or promises that Grantee shall pay money are made on behalf of Grantee in settlement of such Claim without Grantee's express prior written consent. Grantee will indemnify Grantor for its costs and expenses incurred related to the Claim including reasonable attorneys' fees.

7. Indemnification and Release.

To the extent allowed by law, Grantee agrees to indemnify, defend, protect and hold harmless Grantor, including its officers, directors, employees, shareholders, partners, representatives, agents, parents, affiliates, and each of their successors and assigns (collectively, the "**Indemnified Parties**"), from and against any and all liabilities, claims, damages, demands, obligations, expenses, costs, including attorneys' fees and court costs, and causes of action (collectively, "**Liabilities**") resulting from, arising out of or relating to the construction, maintenance, repair, use and operation of the Improvements by Grantee Parties, or any other activities on or use of the Easement Property by Grantee Parties, except to the extent caused by the negligence or intentional misconduct of the Indemnified Parties.

Grantee hereby releases and forever discharges the Indemnified Parties from all Liabilities arising out of or relating to or in any manner based upon or related to Grantee Parties' use of the Easement Property, except to the extent caused by the negligence or intentional misconduct of any of the Indemnified Parties. The obligations under this Section 7 survive the termination or assignment of this Agreement.

8. Environmental Issues.

Grantee shall comply, and shall cause Grantee Parties to comply, with all applicable federal, state and local laws, statutes, rules, ordinances, codes and regulations relating to environmental protection, public health and safety, nuisance or menace, presently in effect or amended or promulgated in the future (collectively, "**Environmental Laws**"). Grantee expressly warrants, represents, and agrees that no pollutant, contaminant, or waste, whether solid, gaseous or liquid, that is infectious, toxic, hazardous, explosive, corrosive, flammable or radioactive, or otherwise regulated, defined, listed or included in any Environmental Law (collectively, "**Hazardous Substances**") will be released or disposed of on, under, or about the Easement Property by Grantee Parties. Grantee shall not, and shall cause Grantee Parties not to, generate, handle, use, store or treat any Hazardous Substances on the Easement Property without the prior written consent of Grantor.

Grantee shall indemnify, defend, protect and hold harmless the Indemnified Parties from and against any and all Liabilities, including any claims asserted under the Environmental Laws, asserted by any entity or individual, arising out of or in connection with the use of the Easement Property or the Improvements by Grantee or the Grantee Parties, or for the breach of any covenant contained in Section 8 of this Agreement, except to the extent caused by the negligence or intentional misconduct of any of the Indemnified Parties. The agreements contained in this Section 8 shall survive the expiration of this Agreement.

9. Environmental Notification.

Grantee shall promptly notify Grantor upon Grantee Parties becoming aware of (i) any release or threatened release of a Hazardous Substance under, on, from, or about the Easement Property, (ii) any proceeding, inquiry, or notice from any federal, state, or local body, commission, council, board, or authority, or others with respect to the use or presence of any Hazardous Substances on the Easement Property or the migration thereof to or from other Property, and (iii) all claims made or threatened by any third party against the Easement Property relating to loss or injury from any Hazardous Substance.

10. Insurance.

Grantee shall obtain and maintain, or shall cause the applicable Grantee Party to obtain and maintain, during the term of this Agreement the insurance coverage described on Exhibit "B" attached hereto and made a part hereof (the "**Insurance Requirements**"), which shall name the Indemnified Parties as an additional insured by endorsement, which Grantee or the applicable Grantee Party shall pay for at its sole cost and expense.

11. Assignment.

Grantee shall have no right to make any assignment of its rights, benefits, or obligations hereunder and any such assignment shall be null and void and shall result in the immediate termination of this Agreement, unless such assignment is previously approved in writing by Grantor. Any such assignment shall require the assignee to be obligated by the terms and conditions of this Agreement and shall not release Grantee of its liabilities and obligations under this Agreement.

12. Fees and Costs.

If either party to this Agreement shall institute suit against the other to enforce its rights under this Agreement or to seek damages by reason of a breach of this Agreement and obtain a valid judgment against the other, the prevailing party shall be entitled to receive all attorneys' fees, witness fess (including expert witness fees) and other litigation-related expenses incurred, with the attorneys' fees to be fixed by the judge of the court of the applicable jurisdiction, sitting without a jury.

13. Time of Essence.

Time is of the essence of this Agreement.

14. Governing Law; Venue.

This Agreement shall be governed by the laws of the State of Arizona. Although the Easement Property is located in Yavapai County, Arizona, the Parties expressly acknowledge and agree that any dispute arising out of or relating to this Agreement (or its breach, termination, or validity) is to be resolved by referral to state or federal courts sitting in Maricopa County, Arizona, which shall have sole and exclusive jurisdiction over all litigation arising hereunder. Each party hereto consents to and attorns to the jurisdiction of such courts and waives any objection to venue in such courts based on improper venue or the alleged inconvenience of such a court as a forum in which to litigate or arbitrate the action.

15. Notices.

Any notice, demand, request, consent, approval, or other communication which any party is required to or desires to give or make to the other party shall be in writing and shall be given by delivery in person or by postage prepaid, registered or certified mail, return receipt requested, addressed as follows:

If to Grantor: Freeport Minerals Corporation
Attn: Land Department
4340 E. Cotton Center Blvd. #110
Phoenix, AZ 85040

If to Grantee: Town of Jerome
600 Clark St.
Jerome, AZ 86331

16. Termination of Grantor's Liability.

If Grantor sells, transfers, assigns, conveys, or otherwise disposes of all its right, title, and interest in and to the Easement Property (a "Disposition") at any point in the future, which Grantor shall have the full right to do without Grantee's consent, Grantor shall not be liable for any matter occurring or obligation arising hereunder after any such Disposition.

17. Termination of Easement.

Grantee may terminate this Agreement at any time by providing at least thirty (30) days prior written notice to Grantor. If Grantee ceases to use the Easement Property or the Improvements for a period of one (1) year, all rights granted to Grantee hereunder shall automatically terminate after thirty (30) days written notice to Grantee providing Grantee with an opportunity to confirm use thereof. Upon termination of this Agreement, Grantee shall, at Grantor's option, remove any Improvements, at Grantee's sole cost and expense, without damage or destruction to the Easement Property, and shall return the Easement Property to substantially the same condition as existed prior to Grantee's entry upon and use of the Easement Property, including construction of the Improvements. Upon termination, Grantee shall execute a deed for recording by Grantor releasing Grantee's rights under the Agreement.

18. No Dedication.

Nothing in this Agreement shall be construed to create a public dedication or conveyance to the public or to any third party or to give any party other than Grantee and its successors and assigns any rights hereunder.

19. Counterparts.

This Agreement may be executed in any number of counterparts, each of which shall be deemed an original and all of which when taken together shall constitute one instrument.

IN WITNESS WHEREOF, the parties hereto have executed this Water Infrastructure Easement Agreement the day and year first herein above written.

[Signature pages follow]

GRANTOR

Freeport Minerals Corporation,
a Delaware corporation

By:_____

Its:_____

STATE OF ARIZONA }

} ss.

COUNTY OF _____}

The foregoing instrument was acknowledged before me this _____ day of _____, 2026, by _____, the _____of Freeport Minerals Corporation, a Delaware corporation, on behalf of the corporation.

IN WITNESS WHEREOF, I hereunto set my hand and official seal.

_____

Notary Public

GRANTEE

Town of Jerome,
an Arizona municipal corporation

By:_____

Its: _____

STATE OF ARIZONA }

} ss.

COUNTY OF YAVAPAI }

The foregoing instrument was acknowledged before me this _____ day of _____, 2026, by _____, the _____of Town of Jerome, an Arizona municipal corporation, on behalf of such municipal corporation.

IN WITNESS WHEREOF, I hereunto set my hand and official seal.

_____

Notary Public

Exhibit "A"

(Legal Description of Easement)

[to be inserted on following page]

Exhibit "B"

(Insurance Requirements)

a. For the entire duration that Grantee Parties enter, or perform activities on, the Easement Property, Grantee or the applicable Grantee Party shall carry and continuously maintain the insurance coverages described below with reputable insurance companies, and which shall include coverage for claims occurring during the duration of this Agreement but not reported until a later date:

   i. Commercial general liability insurance with a combined single limit not less than $2,000,000 for bodily injury (including illness and death at any time resulting therefrom) and property damage. Such insurance shall provide contractual liability, products and completed operations, and sudden and accidental pollution coverage for Grantee Parties' undertakings under the Agreement.

   ii. Automobile and liability insurance covering all owned, non-owned, leased and hired vehicles with a combined single limit of not less than $1,000,000.00 per occurrence for injuries or death of one or more persons or loss or damage to property.

   iii. Worker's compensation insurance including, without limitation, occupational disease, in accordance with the Laws in effect in Arizona and all jurisdictions of hire or origin of the primary insured's employees. Worker's compensation insurance shall be required only when Grantee has employees.

   iv. Employer's liability insurance coverage with a limit of not less than $1,000,000.

b. Each of the commercial general liability and automobile liability policies shall be endorsed to include the Indemnified Parties as additional insureds and to apply on a primary basis as to other insurance available to the Indemnified Parties. All policies required to be maintained by Grantee or the applicable Grantee Party shall include a waiver of subrogation provision in favor of the Indemnified Parties; however, the waiver of subrogation on the worker's compensation policy shall not be required if prohibited by the applicable regulatory authority. Upon request by Grantor, Grantee shall provide to Grantor a certificate(s) of insurance and/or copies of policies evidencing compliance with the provisions of this Exhibit "B". Grantee or the applicable Grantee Party shall be liable for any retentions or deductibles under the required insurance coverages.

Grantor in no way represents or warrants that the minimum coverage limits specified in this Exhibit "B" are sufficient to protect Grantee from liabilities that may arise out of Grantee Parties' use of, entry upon, or performance of activities on the Easement Property, and it is Grantee's responsibility to procure any such additional insurance that Grantee may determine to be necessary or advisable.

File Attachments for Item:

H. Consideration of a Special Event Permit Application from the Jerome Historical Society for A Celebration of Life (Steve Hopkins)

Council will consider and may approve the special event application.

TOWN OF JEROME, ARIZONA
POST OFFICE BOX 335, JEROME, ARIZONA 86331
(928) 634-7943

Founded 1876
Incorporated 1899

Permit # J26-0059

Special Event Permit Application

Thank you for choosing the Town of Jerome for your special event.

Please fill out this packet and submit to the Town Manager.

- All information must be submitted at least **60** days prior to the event.
- Fee(s), due at the time of application submission.
- For questions regarding Special Event Permits, please contact Jerome Town Hall at (928) 634-7943.

Town Use Only

Date Submitted: 10/29/24 Fee: 100 Date Paid: 10/29/24

Paid via: ☐ Check #_____ ☒ C.C. ☐ Cash

Special Event Approvals

Town Manager:
Approve ☐ Deny ☐ Date: _____ *Comments:* _____

*Fire Inspector:
Approve ☐ Deny ☐ Date: _____ *Comments:* _____

*Zoning Administrator:
Approve ☐ Deny ☐ Date: _____ *Comments:* _____

*Police Chief:
Approve ☐ Deny ☐ Date: _____ *Comments:* _____

*Building Inspector/Public Works:
Approve ☐ Deny ☐ Date: _____ *Comments:* _____

**Other approvals as needed based on scope of event.*

Special Event Fee Schedule:

Non-profit 501C3 w/ no entry fee — No Fee
Town Sponsored/Co-Sponsored — No Fee
Film Permits — Fee based on production type
$25 per day
Special Event Liquor License — $75
Special Event Permit — $100

Applicant Information

Applicant's Contact Information

Name of Applicant Scott Hudson Date: Oct 29/26

Name of Organization/Sponsor Jerome Historical Society

Federal Tax or 501 (c)(3) Number ____

Business Mailing Address PO Box

City Jerome State AZ Zip 86331

Business Email Scott@JHS.com

Business Phone # _____ Cell Phone # _____

Authorized Contacts for Event

Please list any other authorized contacts for the Event, including an emergency contact that will be available during the event. At least one **must** be provided.

Name Mary Beth Barr Phone _____

Name _____ Phone _____

Emergency contact for Event*

Name Scott Hudson Phone ____

***Emergency contact should be a party available for duration of event including set up and tear down.**

If additional contacts need to be shared, please use a separate sheet to list additional points of contact

Event Information

Name of Event Hopkins Celebration of life

Date(s) / Time(s) of Event – If multiple dates (Not including set-up/tear-down time)

Start: Date: 12/30/26 Time 5pm End: Date 12/30/26 Time 10pm

Start: Date:_____ Time_____ End: Date_____ Time_____

Start: Date:_____ Time_____ End: Date_____ Time_____

Set-Up Date/Time: From 12/29/26 (Date) 8m (Time) To _____ (Date) _____ (Time)

Tear-Down Date/Time: From 12/31/26 (Date) 8m (Time) To _____ (Date) _____ (Time)

Number of expected/estimated Participants 150

Will an admission or registration fee be charged? YES ☒ NO ☒ Fee $_____

Please briefly describe the event:

Steve Hopkins celebration of life

Event Details

Special Events which occur on a Town right-of-way or on property owned or leased by the Town require an "Application for Facility Use." Please complete and submit along with the Special Event Permit Application.

Will the Special Event take place on property owned or leased by the Town of Jerome?

☐ YES ☒ NO

If yes, which property? _____

If no, what is the **physical address** for the event? _____

Please note that Separate permits or approvals may be required by County or State agencies, depending on the type of event or where there may be the presence of alcohol or food for sale, or by donation. Documentation of all applicable approvals must be provided **30 days prior** *to the event.*

Will the Special Event require the use of temporary signage?

☐ YES ☒ NO

**All signage must comply with Section 509 of the Jerome Zoning Ordinance. A separate sign permit for special events is not required. To hang signs from Town owned property will require prior approval.*

Event Details Continued

Will Alcohol be Sold?

☐ YES ☒ NO ☐ By Donation * Alcohol will be present but not sold or given by donation

If yes, you must submit approval documents from the Arizona Department of Liquor Licenses and Control, at least 30 days prior to the event.

Will Food be Sold?

☐ YES ☒ NO ☐ By Donation

If yes, you must submit approval documents from the Yavapai County Health Services Department, or proof of a prior event approval or Special Event Variance granted by Yavapai County Health Services in the same calendar year.

Will there be outdoor, amplified sound at the event?

☐ YES ☒ NO

Please provide a brief description of outdoor/amplified sound to be used:

_____

_____

_____

Jerome Town Code section 10-1-13 restricts the volume and hours of outdoor sound and amplification devices. Loud noise that is a public nuisance, is prohibited. The Town reserves the right to limit the hours of the Special Event to avoid unreasonable interference with adjacent properties.

Will there be outdoor lighting, or other electrical needs?

☐ YES ☒ NO

Please provide a brief description of the electrical requirements for the event:

_____

_____

_____

Will the event include other vendors/businesses in addition to the business/entity applying for this permit?

☐ YES ☒ NO

If yes, please provide a list of all participating vendors to the Town of Jerome Manager prior to the event. Including the business name(s), dba, owner(s) name(s), physical business location, contact telephone number(s) and vendors' TPT license number.

Will the event require the use of tents or canopies or other temporary structures? *

☐ YES ☒ NO

**Please include the placements of tents or canopies on the site plan, with points of entry or exit clearly marked, including the exact type of structure – Please note set-up and tear-down time(s) must be indicated on Page 4.*

Special Event Access

Will the event require the use of fencing, ropes, barricades, or other types of barriers? *

☐ YES ☒ NO

**Please note barriers and any points of entry or exit through barriers should be clearly marked on your site plan, including exact type of fencing or barriers to be used.*

Will the event require the closure and/or detour of any roadway, sidewalk, or other public access route?

☐ YES ☒ NO

Please include a description of the primary access routes to the event/property and available parking for the crowds anticipated. (Special traffic control may be required for larger events)

Will the use of portable restrooms be necessary during the event?

☐ YES ☒ NO

Please note the use of portable restrooms may be required on a case-by-case basis.

Will trash be created during the special event?

☒ YES ☐ NO

Briefly description of the receptacles to be used and/or efforts to minimize litter around Town during the event:

Trash will be taken to the dump.

Cleanup of the site(s), including removal of all waste and temporary structures, must be completed by 10:00 a.m. of the morning following the end of the Special Event. Please refer to and comply with Jerome Town Code, section 9-1, Garbage and Trash Collection.

Has any community outreach been completed in regard to this special event?

☐ YES ☒ NO

Please give a brief description of any outreach to neighboring residents and/or businesses regarding the special event, including any feedback received from that outreach.

SpookHall Interior Layout

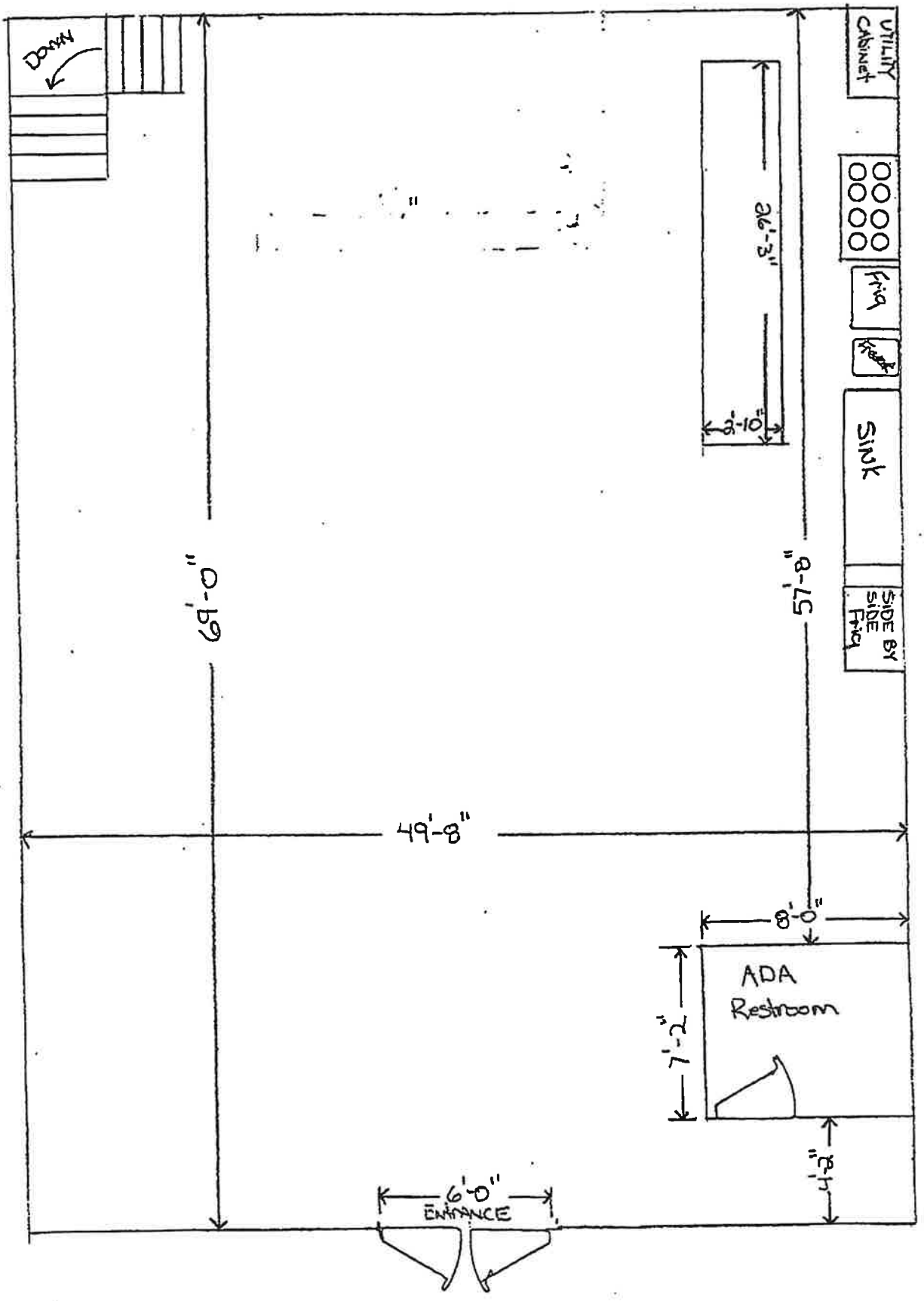

Spook Hall lower level

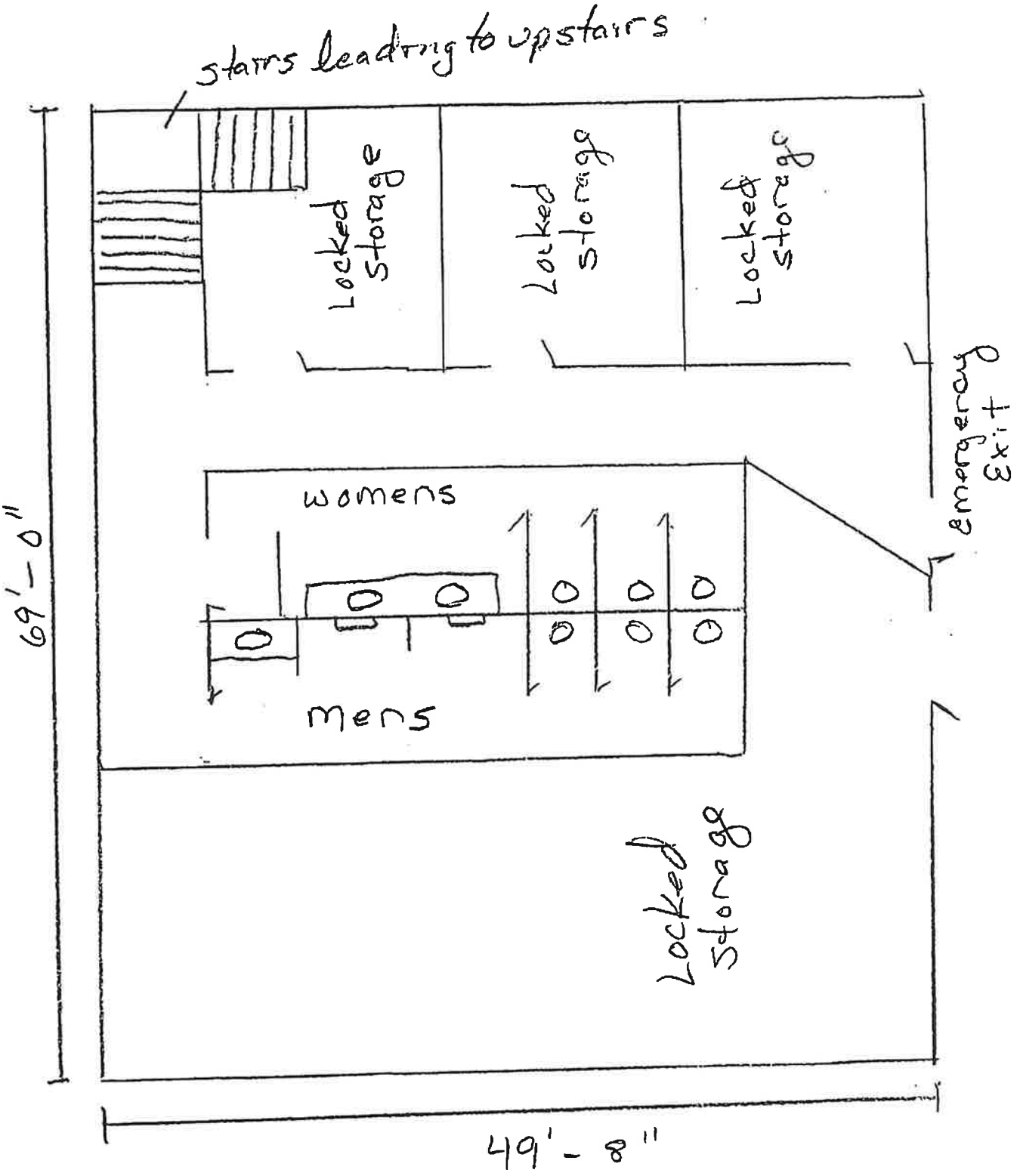

File Attachments for Item:

I. Consideration of a Construction Contract and Bonds Between the Town of Jerome and Fann Environmental, LLC, for Wastewater Treatment Plant Improvements, and Authorizing the Mayor and Manager / Clerk to Take the Necessary Steps to Execute the Contract on Behalf of the Town of Jerome as Approved by the Town Attorney

Council will consider and may approve the contract and bonds and authorize the Mayor and Manager / Clerk to Execute the Contract.

CONSTRUCTION CONTRACT

Town of Jerome
Wastewater Treatment Plant Improvements
Fann Environmental, LLC

October 2026

Prepared For:

Town of Jerome
600 Clark Street
P.O. Box 335
Jerome, AZ 86331

Prepared By:

Pacific Advanced Civil Engineering, Inc.
8723 E Via de Commercio #A-204
Scottsdale, AZ 85258
(480) 991-3595

Index

Notice of Award (EJCDC C-510) ..... Pages 1 - 1
Agreement Between Owner & Contractor (EJCDC C-520) ..... Pages 1 – 7
Performance Bond (EJCDC C-610) ..... Pages 1 - 4
Payment Bond (EJCDC C-615) ..... Pages 1 - 4
Certification of Owner's Attorney & Agency Concurrence (RUS 1780-26, Ex A, Attach 1) ..... Pages 1 – 1
General Conditions (EJCDC C-700) ..... Pages 1 - 70
Supplementary Conditions (EJCDC C-800) ..... Pages 1 – 28
Notice to Proceed (EJCDC C-550) ..... Pages 1 – 1
RD Construction Sign ..... Pages 1 – 1
Application for Payment (C-620) ..... Pages 1 - 6
Work Change Directive (EJCDC C-940) ..... Pages 1 - 1
Change Order (EJCDC C-941) ..... Pages 1 - 1
Field Order (EJCDC C-942) ..... Pages 1 - 1
General Contractor's AIS Certification (RUS 1780-26, Ex A, Attach 4) ..... Pages 1 - 1
Manufacturer's AIS Certification (RUS 1780-26, Ex A, Attach 5) ..... Pages 1 - 1
Certificate of Substantial Completion (EJCDC C-625) ..... Pages 1 - 1
Notice of Acceptability (EJCDC C-626) ..... Pages 1 - 1
Technical Specifications
Engineering Plans
Bid Addenda #1 - #5
Contractor’s Bid

NOTICE OF AWARD

Date of Issuance:	October 22, 2026		
Owner:	Town of Jerome	Owner's Project No.:	N/A
Engineer:	PACE	Engineer's Project No.:	B614
Project:	Jerome Wastewater Treatment Plant Improvements		
Contract Name:	Jerome Wastewater Treatment Plant Improvements		
Bidder:	Fann Environmental, LLC		
Bidder's Address:	6708 Corsair Ave Ste A Prescott, AZ 86301		

You are notified that Owner has accepted your Bid dated **June 3, 2026** for the above Contract, and that you are the Successful Bidder and are awarded a Contract for:

The Town of Jerome Wastewater Treatment Plant Improvements.

The Contract Price of $10,699,947.60 and Contract are contingent upon USDA-RD concurrence. The Contract Price is subject to adjustment based on the provisions of the Contract, including but not limited to those governing changes, Unit Price Work, and Work performed on a cost-plus-fee basis, as applicable.

One (1) electronic, unexecuted counterparts of the Agreement accompany this Notice of Award, and one copy of the Contract Documents accompanies this Notice of Award, or has been transmitted or made available to Bidder electronically.

☒ Drawings will be delivered separately from the other Contract Documents.

You must comply with the following conditions precedent within 15 days of the date of receipt of this Notice of Award:

1. Deliver to Owner **One (1) hard copy and one (1) electronic,** counterparts of the Agreement, signed by Bidder (as Contractor).
2. Deliver with the signed Agreement(s) the Contract security (such as required performance and payment bonds) and insurance documentation, as specified in the Instructions to Bidders and in the General Conditions, Articles 2 and 6.
3. Other conditions precedent (if any): **None**

Failure to comply with these conditions within the time specified will entitle Owner to consider you in default, annul this Notice of Award, and declare your Bid security forfeited.

Within **30** days after you comply with the above conditions, Owner will return to you one fully signed counterpart of the Agreement, together with any additional copies of the Contract Documents as indicated in Paragraph 2.02 of the General Conditions.

Owner: **Town of Jerome**

By *(signature)*: Brett Klein

Name *(printed)*: Brett Klein

Title: Town Manager / Clerk

Copy: Engineer

EJCDC® C-510, Notice of Award.
Copyright© 2018 National Society of Professional Engineers, American Council of Engineering Companies, and American Society of Civil Engineers. All rights reserved.

AGREEMENT BETWEEN OWNER AND CONTRACTOR

This Agreement is by and between **Town of Jerome** ("Owner") and **Fann Environmental, LLC** ("Contractor").

Terms used in this Agreement have the meanings stated in the General Conditions and the Supplementary Conditions.

Owner and Contractor hereby agree as follows:

ARTICLE 1—WORK

1.01 Contractor shall complete all Work as specified or indicated in the Contract Documents. The Work is generally described as follows: Improvements include conversion of this existing trickling filter facility to a 90,000 GPD Sequencing Batch Reactors (SBR) with removal and demolition of existing wastewater equipment; construction of two new 54,000-gallon SBR basins, aerobic digester basin, equalization basin, sludge dewatering, chlorine contact chamber, drying beds, etc.; installation of new 12-inch PVC gravity sewer main, complete with piping and piping appurtenances; construction of a new access roadway, including all grading and drainage work.

ARTICLE 2—THE PROJECT

2.01 The Project, of which the Work under the Contract Documents is a part, is generally described as follows: **Jerome Wastewater Treatment Plant Improvements.**

ARTICLE 3—ENGINEER

3.01 The Owner has retained **Pacific Advanced Civil Engineering, Inc. (PACE)** ("Engineer") to act as Owner's representative, assume all duties and responsibilities of Engineer, and have the rights and authority assigned to Engineer in the Contract.

3.02 The part of the Project that pertains to the Work has been designed by **the Engineer.**

ARTICLE 4—CONTRACT TIMES

4.01 *Time is of the Essence*

A. All time limits for Milestones, if any, Substantial Completion, and completion and readiness for final payment as stated in the Contract Documents are of the essence of the Contract.

4.02 **[Deleted]**

4.03 *Contract Times: Days*

A. The Work will be substantially complete within **300** days after the date when the Contract Times commence to run as provided in Paragraph 4.01 of the General Conditions, and completed and ready for final payment in accordance with Paragraph 15.06 of the General Conditions within **330** days after the date when the Contract Times commence to run.

EJCDC® C-520, Agreement between Owner and Contractor for Construction Contract (Stipulated Price).
Copyright© 2018 National Society of Professional Engineers, American Council of Engineering Companies, and American Society of Civil Engineers. All rights reserved.

4.04 **[Deleted]**

4.05 *Liquidated Damages*

A. Contractor and Owner recognize that time is of the essence as stated in Paragraph 4.01 above and that Owner will suffer financial and other losses if the Work is not completed and Milestones not achieved within the Contract Times, as duly modified. The parties also recognize the delays, expense, and difficulties involved in proving, in a legal or arbitration proceeding, the actual loss suffered by Owner if the Work is not completed on time. Accordingly, instead of requiring any such proof, Owner and Contractor agree that as liquidated damages for delay (but not as a penalty):

1. *Substantial Completion:* Contractor shall pay Owner $**1,600.00** for each day that expires after the time (as duly adjusted pursuant to the Contract) specified above for Substantial Completion, until the Work is substantially complete. **Calculations assume continued RPR field services and associated expenses. It also includes Owner and Engineer project management and office engineering efforts to address unresolved construction issues resulting in extended services beyond the date of substantial completion as stipulated in the contract documents.**

2. *Completion of Remaining Work:* After Substantial Completion, if Contractor shall neglect, refuse, or fail to complete the remaining Work within the Contract Times (as duly adjusted pursuant to the Contract) for completion and readiness for final payment, Contractor shall pay Owner $**533.00** for each day that expires after such time until the Work is completed and ready for final payment. **Liquidated damages beyond the date of project Final Completion are calculated at approximately one-third of the amount for Substantial Completion.**

3. **[Deleted]**

4. Liquidated damages for failing to timely attain ~~Milestones,~~ Substantial Completion, and final completion are not additive, and will not be imposed concurrently.

B. If Owner recovers liquidated damages for a delay in completion by Contractor, then such liquidated damages are Owner's sole and exclusive remedy for such delay, and Owner is precluded from recovering any other damages, whether actual, direct, excess, or consequential, for such delay, except for special damages (if any) specified in this Agreement.

C. **[Deleted]**

4.06 ***[Deleted]***

ARTICLE 5—CONTRACT PRICE

5.01 Owner shall pay Contractor for completion of the Work in accordance with the Contract Documents, the amounts that follow, subject to adjustment under the Contract:

A. For all Work other than Unit Price Work, a lump sum of $10,699,947.60.

EJCDC® C-520, Agreement between Owner and Contractor for Construction Contract (Stipulated Price).
Copyright© 2018 National Society of Professional Engineers, American Council of Engineering Companies, and American Society of Civil Engineers. All rights reserved.

ARTICLE 6—PAYMENT PROCEDURES

6.01 *Submittal and Processing of Payments*

A. Contractor shall submit Applications for Payment in accordance with Article 15 of the General Conditions. Applications for Payment will be processed by Engineer as provided in the General Conditions.

6.02 *Progress Payments; Retainage*

A. Owner shall make progress payments on the basis of Contractor's Applications for Payment on or about the **5th** day of each month during performance of the Work as provided in Paragraph 6.02.A.1 below, provided that such Applications for Payment have been submitted in a timely manner and otherwise meet the requirements of the Contract. All such payments will be measured by the Schedule of Values established as provided in the General Conditions (and in the case of Unit Price Work based on the number of units completed) or, in the event there is no Schedule of Values, as provided elsewhere in the Contract.

1. Prior to Substantial Completion, progress payments will be made in an amount equal to the percentage indicated below but, in each case, less the aggregate of payments previously made and less such amounts as Owner may withhold, including but not limited to liquidated damages, in accordance with the Contract.

a. **95** percent of the value of the Work completed (with the balance being retainage).

1) **[Deleted]**

b. **95** percent of cost of materials and equipment not incorporated in the Work (with the balance being retainage).

B. Upon Substantial Completion **of the entire construction to be provided under the construction Contract Documents**, Owner shall pay an amount sufficient to increase total payments to Contractor to **100** percent of the Work completed, less such amounts set off by Owner pursuant to Paragraph 15.01.E of the General Conditions, and less **200** percent of Engineer's estimate of the value of Work to be completed or corrected as shown on the punch list of items to be completed or corrected prior to final payment.

6.03 *Final Payment*

A. Upon final completion and acceptance of the Work, Owner shall pay the remainder of the Contract Price in accordance with Paragraph 15.06 of the General Conditions.

6.04 *Consent of Surety*

A. Owner will not make final payment, or return or release retainage at Substantial Completion or any other time, unless Contractor submits written consent of the surety to such payment, return, or release.

6.05 *Interest*

A. All amounts not paid when due will bear interest at the rate of **1.5** percent per annum.

EJCDC® C-520, Agreement between Owner and Contractor for Construction Contract (Stipulated Price).
Copyright© 2018 National Society of Professional Engineers, American Council of Engineering Companies, and American Society of Civil Engineers. All rights reserved.

ARTICLE 7—CONTRACT DOCUMENTS

7.01 *Contents*

A. The Contract Documents consist of all of the following:

1. This Agreement.
2. Bonds:
    a. Performance bond (together with power of attorney).
    b. Payment bond (together with power of attorney).
3. General Conditions.
4. Supplementary Conditions.
5. **Technical** Specifications.
6. Drawings (not attached but incorporated by reference) consisting of **83** sheets with each sheet bearing the following general title: **Jerome Wastewater Treatment Plant.**
8. Addenda (numbers **1** to **5**, inclusive).
9. Exhibits to this Agreement (enumerated as follows):
    a. Contractor's Bid
    b. Certification of Owner's Attorney and Agency Concurrence
    c. Application for Payment
    d. Notice to Proceed.
    e. Work Change Directives.
    f. Change Orders.
    g. Field Orders.
    h. General (Prime) Contractor's Certification for AIS.
    i. Manufacturer's Certification for AIS.
    j. Certificate of Substantial Completion.
    k. Notice of Acceptability of Work.
10. The following which may be delivered or issued on or after the Effective Date of the Contract and are not attached hereto:
    a. Warranty Bond, if any.

B. The Contract Documents listed in Paragraph 7.01.A are attached to this Agreement (except as expressly noted otherwise above).

C. There are no Contract Documents other than those listed above in this Article 7.

D. The Contract Documents may only be amended, modified, or supplemented as provided in the Contract.

EJCDC® C-520, Agreement between Owner and Contractor for Construction Contract (Stipulated Price).
Copyright© 2018 National Society of Professional Engineers, American Council of Engineering Companies, and American Society of Civil Engineers. All rights reserved.

ARTICLE 8—REPRESENTATIONS, CERTIFICATIONS, AND STIPULATIONS

8.01 *Contractor's Representations*

A. In order to induce Owner to enter into this Contract, Contractor makes the following representations:

1. Contractor has examined and carefully studied the Contract Documents, including Addenda.

2. Contractor has visited the Site **(if required)**, conducted a thorough visual examination of the Site and adjacent areas, and become familiar with the general, local, and Site conditions that may affect cost, progress, and performance of the Work.

3. Contractor is familiar with all Laws and Regulations that may affect cost, progress, and performance of the Work.

4. Contractor has carefully studied the reports of explorations and tests of subsurface conditions at or adjacent to the Site and the drawings of physical conditions relating to existing surface or subsurface structures at the Site that have been identified in the Supplementary Conditions, with respect to the Technical Data in such reports and drawings.

5. Contractor has carefully studied the reports and drawings relating to Hazardous Environmental Conditions, if any, at or adjacent to the Site that have been identified in the Supplementary Conditions, with respect to Technical Data in such reports and drawings.

6. Contractor has considered the information known to Contractor itself; information commonly known to contractors doing business in the locality of the Site; information and observations obtained from visits to the Site; the Contract Documents; and the Technical Data identified in the Supplementary Conditions or by definition, with respect to the effect of such information, observations, and Technical Data on (a) the cost, progress, and performance of the Work; (b) the means, methods, techniques, sequences, and procedures of construction to be employed by Contractor; and (c) Contractor's safety precautions and programs.

7. Based on the information and observations referred to in the preceding paragraph, Contractor agrees that no further examinations, investigations, explorations, tests, studies, or data are necessary for the performance of the Work at the Contract Price, within the Contract Times, and in accordance with the other terms and conditions of the Contract.

8. Contractor is aware of the general nature of work to be performed by Owner and others at the Site that relates to the Work as indicated in the Contract Documents.

9. Contractor has given Engineer written notice of all conflicts, errors, ambiguities, or discrepancies that Contractor has discovered in the Contract Documents, and of discrepancies between Site conditions and the Contract Documents, and the written resolution thereof by Engineer is acceptable to Contractor.

10. The Contract Documents are generally sufficient to indicate and convey understanding of all terms and conditions for performance and furnishing of the Work.

EJCDC® C-520, Agreement between Owner and Contractor for Construction Contract (Stipulated Price).
Copyright© 2018 National Society of Professional Engineers, American Council of Engineering Companies, and American Society of Civil Engineers. All rights reserved.

11. Contractor's entry into this Contract constitutes an incontrovertible representation by Contractor that without exception all prices in the Agreement are premised upon performing and furnishing the Work required by the Contract Documents.

8.02 *Contractor's Certifications*

A. Contractor certifies that it has not engaged in corrupt, fraudulent, collusive, or coercive practices in competing for or in executing the Contract. For the purposes of this Paragraph 8.02:

1. "corrupt practice" means the offering, giving, receiving, or soliciting of anything of value likely to influence the action of a public official in the bidding process or in the Contract execution;

2. "fraudulent practice" means an intentional misrepresentation of facts made (a) to influence the bidding process or the execution of the Contract to the detriment of Owner, (b) to establish Bid or Contract prices at artificial non-competitive levels, or (c) to deprive Owner of the benefits of free and open competition;

3. "collusive practice" means a scheme or arrangement between two or more Bidders, with or without the knowledge of Owner, a purpose of which is to establish Bid prices at artificial, non-competitive levels; and

4. "coercive practice" means harming or threatening to harm, directly or indirectly, persons or their property to influence their participation in the bidding process or affect the execution of the Contract.

8.03 *Standard General Conditions*

A. Owner stipulates that if the General Conditions that are made a part of this Contract are EJCDC® C-700, Standard General Conditions for the Construction Contract (2018), published by the Engineers Joint Contract Documents Committee, and if Owner is the party that has furnished said General Conditions, then Owner has plainly shown all modifications to the standard wording of such published document to the Contractor, through a process such as highlighting or "track changes" (redline/strikeout), or in the Supplementary Conditions.

EJCDC® C-520, Agreement between Owner and Contractor for Construction Contract (Stipulated Price).
Copyright© 2018 National Society of Professional Engineers, American Council of Engineering Companies, and American Society of Civil Engineers. All rights reserved.

IN WITNESS WHEREOF, Owner and Contractor have signed this Agreement.

This Agreement will be effective on _____ (which is the Effective Date of the Contract).

Owner:	Contractor:
Town of Jerome	
(typed or printed name of organization)	*(typed or printed name of organization)*
By: _____	By: _____
(individual's signature)	*(individual's signature)*
Date: _____	Date: _____
(date signed)	*(date signed)*
Name: _____	Name: _____
(typed or printed)	*(typed or printed)*
Title: _____	Title: _____
(typed or printed)	*(typed or printed)*
	*(If **[Type of Entity]** is a corporation, a partnership, or a joint venture, attach evidence of authority to sign.)*
Attest: _____	Attest: _____
(individual's signature)	*(individual's signature)*
Title: _____	Title: _____
(typed or printed)	*(typed or printed)*
Address for giving notices:	Address for giving notices:
600 Clark Street	
P.O. Box 335	
Jerome, AZ 86331	
Designated Representative:	Designated Representative:
Name: _____	Name: _____
(typed or printed)	*(typed or printed)*
Title: _____	Title: _____
(typed or printed)	*(typed or printed)*
Address:	Address:
Phone: _____	Phone: _____
Email: _____	Email: _____
*(If **[Type of Entity]** is a corporation, attach evidence of authority to sign. If **[Type of Entity]** is a public body, attach evidence of authority to sign and resolution or other documents authorizing execution of this Agreement.)*	License No.: _____ *(where applicable)*
	State: _____

EJCDC® C-520, Agreement between Owner and Contractor for Construction Contract (Stipulated Price).
Copyright© 2018 National Society of Professional Engineers, American Council of Engineering Companies, and American Society of Civil Engineers. All rights reserved.

PERFORMANCE BOND

Contractor Name: **Fann Environmental, LLC** Address *(principal place of business)*: **6078 Corsair Ave Ste A** **Prescott, AZ 86301**	**Surety** Name: Address *(principal place of business)*:
Owner Name: **Town of Jerome** Mailing address *(principal place of business)*: **600 Clark Street, Jerome AZ, 86331**	**Contract** Description *(name and location)*: **Jerome Wastewater Treatment Plant Improvements, Sewer Plant Road, Jerome, AZ 86331** Contract Price: **$10,699,947.60** Effective Date of Contract:

Bond

Bond Amount:

Date of Bond:

(Date of Bond cannot be earlier than Effective Date of Contract)

Modifications to this Bond form:

☐ None ☐ See Paragraph 16

Surety and Contractor, intending to be legally bound hereby, subject to the terms set forth in this Performance Bond, do each cause this Performance Bond to be duly executed by an authorized officer, agent, or representative.

Contractor as Principal	Surety
_____ *(Full formal name of Contractor)*	_____ *(Full formal name of Surety) (corporate seal)*
By: _____ *(Signature)*	By: _____ *(Signature)(Attach Power of Attorney)*
Name: _____ *(Printed or typed)*	Name: _____ *(Printed or typed)*
Title: _____	Title: _____
Attest: _____ *(Signature)*	Attest: _____ *(Signature)*
Name: _____ *(Printed or typed)*	Name: _____ *(Printed or typed)*
Title: _____	Title: _____

Notes: (1) Provide supplemental execution by any additional parties, such as joint venturers. (2) Any singular reference to Contractor, Surety, Owner, or other party is considered plural where applicable.

EJCDC® C-610, Performance Bond.
Copyright© 2018 National Society of Professional Engineers, American Council of Engineering Companies, and American Society of Civil Engineers. All rights reserved.

1. The Contractor and Surety, jointly and severally, bind themselves, their heirs, executors, administrators, successors, and assigns to the Owner for the performance of the Construction Contract, which is incorporated herein by reference.
2. If the Contractor performs the Construction Contract, the Surety and the Contractor shall have no obligation under this Bond, except when applicable to participate in a conference as provided in Paragraph 3.
3. If there is no Owner Default under the Construction Contract, the Surety's obligation under this Bond will arise after:
    3.1. The Owner first provides notice to the Contractor and the Surety that the Owner is considering declaring a Contractor Default. Such notice may indicate whether the Owner is requesting a conference among the Owner, Contractor, and Surety to discuss the Contractor's performance. If the Owner does not request a conference, the Surety may, within five (5) business days after receipt of the Owner's notice, request such a conference. If the Surety timely requests a conference, the Owner shall attend. Unless the Owner agrees otherwise, any conference requested under this Paragraph 3.1 will be held within ten (10) business days of the Surety's receipt of the Owner's notice. If the Owner, the Contractor, and the Surety agree, the Contractor shall be allowed a reasonable time to perform the Construction Contract, but such an agreement does not waive the Owner's right, if any, subsequently to declare a Contractor Default;
    3.2. The Owner declares a Contractor Default, terminates the Construction Contract and notifies the Surety; and
    3.3. The Owner has agreed to pay the Balance of the Contract Price in accordance with the terms of the Construction Contract to the Surety or to a contractor selected to perform the Construction Contract.
4. Failure on the part of the Owner to comply with the notice requirement in Paragraph 3.1 does not constitute a failure to comply with a condition precedent to the Surety's obligations, or release the Surety from its obligations, except to the extent the Surety demonstrates actual prejudice.
5. When the Owner has satisfied the conditions of Paragraph 3, the Surety shall promptly and at the Surety's expense take one of the following actions:
    5.1. Arrange for the Contractor, with the consent of the Owner, to perform and complete the Construction Contract;
    5.2. Undertake to perform and complete the Construction Contract itself, through its agents or independent contractors;
    5.3. Obtain bids or negotiated proposals from qualified contractors acceptable to the Owner for a contract for performance and completion of the Construction Contract, arrange for a contract to be prepared for execution by the Owner and a contractor selected with the Owners concurrence, to be secured with performance and payment bonds executed by a qualified surety equivalent to the bonds issued on the Construction Contract, and pay to the Owner the amount of damages as described in Paragraph 7 in excess of the Balance of the Contract Price incurred by the Owner as a result of the Contractor Default; or
    5.4. Waive its right to perform and complete, arrange for completion, or obtain a new contractor, and with reasonable promptness under the circumstances:

Copyright© 2018 National Society of Professional Engineers, American Council of Engineering Companies, and American Society of Civil Engineers. All rights reserved.

5.4.1 After investigation, determine the amount for which it may be liable to the Owner and, as soon as practicable after the amount is determined, make payment to the Owner; or

5.4.2 Deny liability in whole or in part and notify the Owner, citing the reasons for denial.

6. If the Surety does not proceed as provided in Paragraph 5 with reasonable promptness, the Surety shall be deemed to be in default on this Bond seven days after receipt of an additional written notice from the Owner to the Surety demanding that the Surety perform its obligations under this Bond, and the Owner shall be entitled to enforce any remedy available to the Owner. If the Surety proceeds as provided in Paragraph 5.4, and the Owner refuses the payment, or the Surety has denied liability, in whole or in part, without further notice, the Owner shall be entitled to enforce any remedy available to the Owner.

7. If the Surety elects to act under Paragraph 5.1, 5.2, or 5.3, then the responsibilities of the Surety to the Owner will not be greater than those of the Contractor under the Construction Contract, and the responsibilities of the Owner to the Surety will not be greater than those of the Owner under the Construction Contract. Subject to the commitment by the Owner to pay the Balance of the Contract Price, the Surety is obligated, without duplication for:

   7.1. the responsibilities of the Contractor for correction of defective work and completion of the Construction Contract;

   7.2. additional legal, design professional, and delay costs resulting from the Contractor's Default, and resulting from the actions or failure to act of the Surety under Paragraph 5; and

   7.3. liquidated damages, or if no liquidated damages are specified in the Construction Contract, actual damages caused by delayed performance or non-performance of the Contractor.

8. If the Surety elects to act under Paragraph 5.1, 5.3, or 5.4, the Surety's liability is limited to the amount of this Bond.

9. The Surety shall not be liable to the Owner or others for obligations of the Contractor that are unrelated to the Construction Contract, and the Balance of the Contract Price will not be reduced or set off on account of any such unrelated obligations. No right of action will accrue on this Bond to any person or entity other than the Owner or its heirs, executors, administrators, successors, and assigns.

10. The Surety hereby waives notice of any change, including changes of time, to the Construction Contract or to related subcontracts, purchase orders, and other obligations.

11. Any proceeding, legal or equitable, under this Bond must be instituted in any court of competent jurisdiction in the location in which the work or part of the work is located and must be instituted within two years after a declaration of Contractor Default or within two years after the Contractor ceased working or within two years after the Surety refuses or fails to perform its obligations under this Bond, whichever occurs first. If the provisions of this paragraph are void or prohibited by law, the minimum periods of limitations available to sureties as a defense in the jurisdiction of the suit will be applicable.

12. Notice to the Surety, the Owner, or the Contractor must be mailed or delivered to the address shown on the page on which their signature appears.

13. When this Bond has been furnished to comply with a statutory or other legal requirement in the location where the construction was to be performed, any provision in this Bond conflicting with said statutory or legal requirement will be deemed deleted therefrom and provisions conforming to such

Copyright© 2018 National Society of Professional Engineers, American Council of Engineering Companies, and American Society of Civil Engineers. All rights reserved.

statutory or other legal requirement will be deemed incorporated herein. When so furnished, the intent is that this Bond will be construed as a statutory bond and not as a common law bond.

14. Definitions

    14.1. *Balance of the Contract Price*—The total amount payable by the Owner to the Contractor under the Construction Contract after all proper adjustments have been made including allowance for the Contractor for any amounts received or to be received by the Owner in settlement of insurance or other claims for damages to which the Contractor is entitled, reduced by all valid and proper payments made to or on behalf of the Contractor under the Construction Contract.

    14.2. *Construction Contract*—The agreement between the Owner and Contractor identified on the cover page, including all Contract Documents and changes made to the agreement and the Contract Documents.

    14.3. *Contractor Default*—Failure of the Contractor, which has not been remedied or waived, to perform or otherwise to comply with a material term of the Construction Contract.

    14.4. *Owner Default*—Failure of the Owner, which has not been remedied or waived, to pay the Contractor as required under the Construction Contract or to perform and complete or comply with the other material terms of the Construction Contract.

    14.5. *Contract Documents*—All the documents that comprise the agreement between the Owner and Contractor.

15. If this Bond is issued for an agreement between a contractor and subcontractor, the term Contractor in this Bond will be deemed to be Subcontractor and the term Owner will be deemed to be Contractor.

16. Modifications to this Bond are as follows:

    16.1. Pursuant to ARS Section 34-222.G:

    The conditions and provisions in the performance bond regarding the surety's obligations shall follow the following form:

    Now, therefore, the condition of this obligation is such, that if the principal faithfully performs and fulfills all of the undertakings, covenants, terms, conditions and agreements of the contract during the original term of the contract and any extension of the contract, with or without notice to the surety, and during the life of any guaranty required under the contract, and also performs and fulfills all of the undertakings, covenants, terms, conditions and agreements of all duly authorized modifications of the contract that may hereafter be made, notice of which modifications to the surety being hereby waived, the above obligation is void. Otherwise it remains in full force and effect.

    Provided, however, that this bond is executed pursuant to the provisions of title 34, chapter 2, article 2, Arizona Revised Statutes, and all liabilities on this bond shall be determined in accordance with the provisions of title 34, chapter 2, article 2, Arizona Revised Statutes, to the extent as if it were copied at length in this agreement.

    The prevailing party in a suit on this bond shall recover as part of the judgment reasonable attorney fees that may be fixed by a judge of the court.

Copyright© 2018 National Society of Professional Engineers, American Council of Engineering Companies, and American Society of Civil Engineers. All rights reserved.

PAYMENT BOND

Contractor	**Surety**
Name: **Fann Environmental, LLC** Address *(principal place of business)*: **6078 Corsair Ave Ste A** **Prescott, AZ 86301**	Name: Address *(principal place of business)*:
Owner	**Contract**
Name: **Town of Jerome** Mailing address *(principal place of business)*: **600 Clark Street, Jerome AZ, 86331**	Description *(name and location)*: **Jerome Wastewater Treatment Plant Improvements, Sewer Plant Road, Jerome, AZ 86331** Contract Price: **$10,699,947.60** Effective Date of Contract:

Bond

Bond Amount:

Date of Bond:

(Date of Bond cannot be earlier than Effective Date of Contract)

Modifications to this Bond form:

☐ None ☐ See Paragraph 18

Surety and Contractor, intending to be legally bound hereby, subject to the terms set forth in this Payment Bond, do each cause this Payment Bond to be duly executed by an authorized officer, agent, or representative.

Contractor as Principal	Surety
_____ *(Full formal name of Contractor)*	_____ *(Full formal name of Surety) (corporate seal)*
By: _____ *(Signature)*	By: _____ *(Signature)(Attach Power of Attorney)*
Name: _____ *(Printed or typed)*	Name: _____ *(Printed or typed)*
Title: _____	Title: _____
Attest: _____ *(Signature)*	Attest: _____ *(Signature)*
Name: _____ *(Printed or typed)*	Name: _____ *(Printed or typed)*
Title: _____	Title: _____

Notes: (1) Provide supplemental execution by any additional parties, such as joint venturers. (2) Any singular reference to Contractor, Surety, Owner, or other party is considered plural where applicable.

EJCDC® C-615, Payment Bond.
Copyright© 2018 National Society of Professional Engineers, American Council of Engineering Companies, and American Society of Civil Engineers. All rights reserved.

1. The Contractor and Surety, jointly and severally, bind themselves, their heirs, executors, administrators, successors, and assigns to the Owner to pay for labor, materials, and equipment furnished for use in the performance of the Construction Contract, which is incorporated herein by reference, subject to the following terms.
2. If the Contractor promptly makes payment of all sums due to Claimants, and defends, indemnifies, and holds harmless the Owner from claims, demands, liens, or suits by any person or entity seeking payment for labor, materials, or equipment furnished for use in the performance of the Construction Contract, then the Surety and the Contractor shall have no obligation under this Bond.
3. If there is no Owner Default under the Construction Contract, the Surety's obligation to the Owner under this Bond will arise after the Owner has promptly notified the Contractor and the Surety (at the address described in Paragraph 13) of claims, demands, liens, or suits against the Owner or the Owner's property by any person or entity seeking payment for labor, materials, or equipment furnished for use in the performance of the Construction Contract, and tendered defense of such claims, demands, liens, or suits to the Contractor and the Surety.
4. When the Owner has satisfied the conditions in Paragraph 3, the Surety shall promptly and at the Surety's expense defend, indemnify, and hold harmless the Owner against a duly tendered claim, demand, lien, or suit.
5. The Surety's obligations to a Claimant under this Bond will arise after the following:
    5.1. Claimants who do not have a direct contract with the Contractor
        5.1.1. have furnished a written notice of non-payment to the Contractor, stating with substantial accuracy the amount claimed and the name of the party to whom the materials were, or equipment was, furnished or supplied or for whom the labor was done or performed, within ninety (90) days after having last performed labor or last furnished materials or equipment included in the Claim; and
        5.1.2. have sent a Claim to the Surety (at the address described in Paragraph 13).
    5.2. Claimants who are employed by or have a direct contract with the Contractor have sent a Claim to the Surety (at the address described in Paragraph 13).
6. If a notice of non-payment required by Paragraph 5.1.1 is given by the Owner to the Contractor, that is sufficient to satisfy a Claimant's obligation to furnish a written notice of non-payment under Paragraph 5.1.1.
7. When a Claimant has satisfied the conditions of Paragraph 5.1 or 5.2, whichever is applicable, the Surety shall promptly and at the Surety's expense take the following actions:
    7.1. Send an answer to the Claimant, with a copy to the Owner, within sixty (60) days after receipt of the Claim, stating the amounts that are undisputed and the basis for challenging any amounts that are disputed; and
    7.2. Pay or arrange for payment of any undisputed amounts.
    7.3. The Surety's failure to discharge its obligations under Paragraph 7.1 or 7.2 will not be deemed to constitute a waiver of defenses the Surety or Contractor may have or acquire as to a Claim, except as to undisputed amounts for which the Surety and Claimant have reached agreement. If, however, the Surety fails to discharge its obligations under Paragraph 7.1 or 7.2, the Surety shall indemnify the Claimant for the reasonable attorney's fees the Claimant incurs thereafter to recover any sums found to be due and owing to the Claimant.

Copyright© 2018 National Society of Professional Engineers, American Council of Engineering Companies, and American Society of Civil Engineers. All rights reserved.

8. The Surety's total obligation will not exceed the amount of this Bond, plus the amount of reasonable attorney's fees provided under Paragraph 7.3, and the amount of this Bond will be credited for any payments made in good faith by the Surety.
9. Amounts owed by the Owner to the Contractor under the Construction Contract will be used for the performance of the Construction Contract and to satisfy claims, if any, under any construction performance bond. By the Contractor furnishing and the Owner accepting this Bond, they agree that all funds earned by the Contractor in the performance of the Construction Contract are dedicated to satisfying obligations of the Contractor and Surety under this Bond, subject to the Owner's priority to use the funds for the completion of the work.
10. The Surety shall not be liable to the Owner, Claimants, or others for obligations of the Contractor that are unrelated to the Construction Contract. The Owner shall not be liable for the payment of any costs or expenses of any Claimant under this Bond, and shall have under this Bond no obligation to make payments to or give notice on behalf of Claimants, or otherwise have any obligations to Claimants under this Bond.
11. The Surety hereby waives notice of any change, including changes of time, to the Construction Contract or to related subcontracts, purchase orders, and other obligations.
12. No suit or action will be commenced by a Claimant under this Bond other than in a court of competent jurisdiction in the state in which the project that is the subject of the Construction Contract is located or after the expiration of one year from the date (1) on which the Claimant sent a Claim to the Surety pursuant to Paragraph 5.1.2 or 5.2, or (2) on which the last labor or service was performed by anyone or the last materials or equipment were furnished by anyone under the Construction Contract, whichever of (1) or (2) first occurs. If the provisions of this paragraph are void or prohibited by law, the minimum period of limitation available to sureties as a defense in the jurisdiction of the suit will be applicable.
13. Notice and Claims to the Surety, the Owner, or the Contractor must be mailed or delivered to the address shown on the page on which their signature appears. Actual receipt of notice or Claims, however accomplished, will be sufficient compliance as of the date received.
14. When this Bond has been furnished to comply with a statutory or other legal requirement in the location where the construction was to be performed, any provision in this Bond conflicting with said statutory or legal requirement will be deemed deleted here from and provisions conforming to such statutory or other legal requirement will be deemed incorporated herein. When so furnished, the intent is that this Bond will be construed as a statutory bond and not as a common law bond.
15. Upon requests by any person or entity appearing to be a potential beneficiary of this Bond, the Contractor and Owner shall promptly furnish a copy of this Bond or shall permit a copy to be made.
16. Definitions

    16.1. *Claim*—A written statement by the Claimant including at a minimum:

        16.1.1. The name of the Claimant;

        16.1.2. The name of the person for whom the labor was done, or materials or equipment furnished;

        16.1.3. A copy of the agreement or purchase order pursuant to which labor, materials, or equipment was furnished for use in the performance of the Construction Contract;

        16.1.4. A brief description of the labor, materials, or equipment furnished;

Copyright© 2018 National Society of Professional Engineers, American Council of Engineering Companies, and American Society of Civil Engineers. All rights reserved.

16.1.5. The date on which the Claimant last performed labor or last furnished materials or equipment for use in the performance of the Construction Contract;

16.1.6. The total amount earned by the Claimant for labor, materials, or equipment furnished as of the date of the Claim;

16.1.7. The total amount of previous payments received by the Claimant; and

16.1.8. The total amount due and unpaid to the Claimant for labor, materials, or equipment furnished as of the date of the Claim.

16.2. *Claimant*—An individual or entity having a direct contract with the Contractor or with a subcontractor of the Contractor to furnish labor, materials, or equipment for use in the performance of the Construction Contract. The term Claimant also includes any individual or entity that has rightfully asserted a claim under an applicable mechanic's lien or similar statute against the real property upon which the Project is located. The intent of this Bond is to include without limitation in the terms of "labor, materials, or equipment" that part of the water, gas, power, light, heat, oil, gasoline, telephone service, or rental equipment used in the Construction Contract, architectural and engineering services required for performance of the work of the Contractor and the Contractor's subcontractors, and all other items for which a mechanic's lien may be asserted in the jurisdiction where the labor, materials, or equipment were furnished.

16.3. *Construction Contract*—The agreement between the Owner and Contractor identified on the cover page, including all Contract Documents and all changes made to the agreement and the Contract Documents.

16.4. *Owner Default*—Failure of the Owner, which has not been remedied or waived, to pay the Contractor as required under the Construction Contract or to perform and complete or comply with the other material terms of the Construction Contract.

16.5. *Contract Documents*—All the documents that comprise the agreement between the Owner and Contractor.

17. If this Bond is issued for an agreement between a contractor and subcontractor, the term Contractor in this Bond will be deemed to be Subcontractor and the term Owner will be deemed to be Contractor.

18. Modifications to this Bond are as follows:

18.1. Pursuant to ARS Section 34-222.G:

Now, therefore, the condition of this obligation is such, that if the principal promptly pays all monies due to all persons supplying labor or materials to the principal or the principal's subcontractors in the prosecution of the work provided for in the contract, this obligation is void. Otherwise it remains in full force and effect.

Provided, however, that this bond is executed pursuant to the provisions of title 34, chapter 2, article 2, Arizona Revised Statutes, and all liabilities on this bond shall be determined in accordance with the provisions, conditions and limitations of title 34, chapter 2, article 2, Arizona Revised Statutes, to the same extent as if they were copied at length in this agreement.

The prevailing party in a suit on this bond shall recover as a part of the judgment reasonable attorney fees that may be fixed by a judge of the court.

Copyright© 2018 National Society of Professional Engineers, American Council of Engineering Companies, and American Society of Civil Engineers. All rights reserved.

CERTIFICATE OF OWNER'S ATTORNEY AND AGENCY CONCURRENCE

Notes to User: This exhibit consists of two certificates, on a single page, to be attached to the Contract and signed upon execution. The first is a certificate to be signed by the Owner's attorney and the second is the concurrence to be signed by the State Engineer. This page is to be inserted after the Agreement between Owner and Contractor for Construction Contract (Stipulated Price) (EJCDC C-520, 2018) in the Construction Contract Documents.

CERTFICATE OF OWNER'S ATTORNEY PROJECT NAME:
Jerome Wastewater Treatment Plant Improvements
CONTRACTOR NAME AND CONTRACT NUMBER: **Fann Environmental, LLC**

I, the undersigned, **John Austin Gaylord**, the duly authorized and acting legal representative of **Town of Jerome (the "Town")**, do hereby certify as follows: I have examined the attached Contract(s) **(the "Contract"),** and performance and payment bond(s) **(the "Bonds")** and **have reviewed the actions of** ~~the manner of execution thereof~~ **the Town Council (the "Council") as certified by the Town Clerk**, and **assuming the genuineness of signatures not familiar to me, the legal capacity of all persons executing the Contract, and that the execution and delivery of such instruments and the transactions contemplated thereby are within the authority of the Town and have been duly authorized by proper proceedings;** I am of the opinion that ~~each of the aforesaid agreements is adequate and has been duly executed by the proper parties thereto acting through their duly authorized representatives; that said representatives have~~ **the Council has** full power and authority to execute ~~said agreements~~ **the Contract** on behalf of the ~~respective parties named thereon~~ **Town**; and that the foregoing agreements constitute valid and legally binding obligations upon the parties executing the same in accordance with the terms, conditions, and provisions thereof~~.~~**, subject to: (a) the effect of any applicable bankruptcy, insolvency, moratorium, reorganization or other similar laws affecting creditors' rights generally; and (b) general principals of equity, including, without limitation, the discretionary nature of specific performance and other equitable remedies.**

Name Date

AGENCY CONCURRENCE

As lender or insurer of funds to defray the costs of this Contract, and without liability for any payments thereunder, the Agency hereby concurs in the form, content, and execution of this Agreement.

Agency Representative Date

Name

STANDARD GENERAL CONDITIONS OF THE CONSTRUCTION CONTRACT

TABLE OF CONTENTS

Page

Article 1—Definitions and Terminology 1
1.01 Defined Terms 1
1.02 Terminology 6
Article 2—Preliminary Matters 7
2.01 Delivery of Performance and Payment Bonds; Evidence of Insurance 7
2.02 Copies of Documents 7
2.03 Before Starting Construction 7
2.04 Preconstruction Conference; Designation of Authorized Representatives 8
2.05 Acceptance of Schedules 8
2.06 Electronic Transmittals 8
Article 3—Contract Documents: Intent, Requirements, Reuse 9
3.01 Intent 9
3.02 Reference Standards 9
3.03 Reporting and Resolving Discrepancies 10
3.04 Requirements of the Contract Documents 10
3.05 Reuse of Documents 11
Article 4—Commencement and Progress of the Work 11
4.01 Commencement of Contract Times; Notice to Proceed 11
4.02 Starting the Work 11
4.03 Reference Points 11
4.04 Progress Schedule 12
4.05 Delays in Contractor's Progress 12
Article 5—Site; Subsurface and Physical Conditions; Hazardous Environmental Conditions 13
5.01 Availability of Lands 13
5.02 Use of Site and Other Areas 14
5.03 Subsurface and Physical Conditions 15
5.04 Differing Subsurface or Physical Conditions 16

EJCDC® C-700, Standard General Conditions of the Construction Contract.
Copyright© 2018 National Society of Professional Engineers, American Council of Engineering Companies, and American Society of Civil Engineers. All rights reserved.

5.05 Underground Facilities....17
5.06 Hazardous Environmental Conditions at Site....19
Article 6—Bonds and Insurance....21
6.01 Performance, Payment, and Other Bonds....21
6.02 Insurance—General Provisions....22
6.03 Contractor's Insurance....24
6.04 Builder's Risk and Other Property Insurance....25
6.05 Property Losses; Subrogation....25
6.06 Receipt and Application of Property Insurance Proceeds....27
Article 7—Contractor's Responsibilities....27
7.01 Contractor's Means and Methods of Construction....27
7.02 Supervision and Superintendence....27
7.03 Labor; Working Hours....27
7.04 Services, Materials, and Equipment....28
7.05 "Or Equals"....28
7.06 Substitutes....29
7.07 Concerning Subcontractors and Suppliers....31
7.08 Patent Fees and Royalties....32
7.09 Permits....33
7.10 Taxes....33
7.11 Laws and Regulations....33
7.12 Record Documents....33
7.13 Safety and Protection....34
7.14 Hazard Communication Programs....35
7.15 Emergencies....35
7.16 Submittals....35
7.17 Contractor's General Warranty and Guarantee....38
7.18 Indemnification....39
7.19 Delegation of Professional Design Services....39
Article 8—Other Work at the Site....40
8.01 Other Work....40
8.02 Coordination....41
8.03 Legal Relationships....41

Copyright© 2018 National Society of Professional Engineers, American Council of Engineering Companies, and American Society of Civil Engineers. All rights reserved.

Article 9—Owner's Responsibilities....42
9.01 Communications to Contractor....42
9.02 Replacement of Engineer....42
9.03 Furnish Data....42
9.04 Pay When Due....42
9.05 Lands and Easements; Reports, Tests, and Drawings....43
9.06 Insurance....43
9.07 Change Orders....43
9.08 Inspections, Tests, and Approvals....43
9.09 Limitations on Owner's Responsibilities....43
9.10 Undisclosed Hazardous Environmental Condition....43
9.11 Evidence of Financial Arrangements....43
9.12 Safety Programs....43
Article 10—Engineer's Status During Construction....44
10.01 Owner's Representative....44
10.02 Visits to Site....44
10.03 Resident Project Representative....44
10.04 Engineer's Authority....44
10.05 Determinations for Unit Price Work....45
10.06 Decisions on Requirements of Contract Documents and Acceptability of Work....45
10.07 Limitations on Engineer's Authority and Responsibilities....45
10.08 Compliance with Safety Program....45
Article 11—Changes to the Contract....46
11.01 Amending and Supplementing the Contract....46
11.02 Change Orders....46
11.03 Work Change Directives....46
11.04 Field Orders....47
11.05 Owner-Authorized Changes in the Work....47
11.06 Unauthorized Changes in the Work....47
11.07 Change of Contract Price....47
11.08 Change of Contract Times....49
11.09 Change Proposals....49
11.10 Notification to Surety....50

Copyright© 2018 National Society of Professional Engineers, American Council of Engineering Companies, and American Society of Civil Engineers. All rights reserved.

Article 12—Claims 50
12.01 Claims 50
Article 13—Cost of the Work; Allowances; Unit Price Work 51
13.01 Cost of the Work 51
13.02 Allowances 55
13.03 Unit Price Work 55
Article 14—Tests and Inspections; Correction, Removal, or Acceptance of Defective Work 56
14.01 Access to Work 56
14.02 Tests, Inspections, and Approvals 56
14.03 Defective Work 57
14.04 Acceptance of Defective Work 58
14.05 Uncovering Work 58
14.06 Owner May Stop the Work 58
14.07 Owner May Correct Defective Work 59
Article 15—Payments to Contractor; Set-Offs; Completion; Correction Period 59
15.01 Progress Payments 59
15.02 Contractor's Warranty of Title 62
15.03 Substantial Completion 62
15.04 Partial Use or Occupancy 63
15.05 Final Inspection 64
15.06 Final Payment 64
15.07 Waiver of Claims 65
15.08 Correction Period 66
Article 16—Suspension of Work and Termination 67
16.01 Owner May Suspend Work 67
16.02 Owner May Terminate for Cause 67
16.03 Owner May Terminate for Convenience 68
16.04 Contractor May Stop Work or Terminate 68
Article 17—Final Resolution of Disputes 69
17.01 Methods and Procedures 69
Article 18—Miscellaneous 69
18.01 Giving Notice 69
18.02 Computation of Times 69

Copyright© 2018 National Society of Professional Engineers, American Council of Engineering Companies, and American Society of Civil Engineers. All rights reserved.

18.03 Cumulative Remedies 70
18.04 Limitation of Damages 70
18.05 No Waiver 70
18.06 Survival of Obligations 70
18.07 Controlling Law 70
18.08 Assignment of Contract 70
18.09 Successors and Assigns 70
18.10 Headings 70

Copyright© 2018 National Society of Professional Engineers, American Council of Engineering Companies, and American Society of Civil Engineers. All rights reserved.

STANDARD GENERAL CONDITIONS OF THE CONSTRUCTION CONTRACT

ARTICLE 1—DEFINITIONS AND TERMINOLOGY

1.01 *Defined Terms*

A. Wherever used in the Bidding Requirements or Contract Documents, a term printed with initial capital letters, including the term's singular and plural forms, will have the meaning indicated in the definitions below. In addition to terms specifically defined, terms with initial capital letters in the Contract Documents include references to identified articles and paragraphs, and the titles of other documents or forms.

1. *Addenda*—Written or graphic instruments issued prior to the opening of Bids which clarify, correct, or change the Bidding Requirements or the proposed Contract Documents.

2. *Agreement*—The written instrument, executed by Owner and Contractor, that sets forth the Contract Price and Contract Times, identifies the parties and the Engineer, and designates the specific items that are Contract Documents.

3. *Application for Payment*—The document prepared by Contractor, in a form acceptable to Engineer, to request progress or final payments, and which is to be accompanied by such supporting documentation as is required by the Contract Documents.

4. *Bid*—The offer of a Bidder submitted on the prescribed form setting forth the prices for the Work to be performed.

5. *Bidder*—An individual or entity that submits a Bid to Owner.

6. *Bidding Documents*—The Bidding Requirements, the proposed Contract Documents, and all Addenda.

7. *Bidding Requirements*—The Advertisement or invitation to bid, Instructions to Bidders, Bid Bond or other Bid security, if any, the Bid Form, and the Bid with any attachments.

8. *Change Order*—A document which is signed by Contractor and Owner and authorizes an addition, deletion, or revision in the Work or an adjustment in the Contract Price or the Contract Times, or other revision to the Contract, issued on or after the Effective Date of the Contract.

9. *Change Proposal*—A written request by Contractor, duly submitted in compliance with the procedural requirements set forth herein, seeking an adjustment in Contract Price or Contract Times; contesting an initial decision by Engineer concerning the requirements of the Contract Documents or the acceptability of Work under the Contract Documents; challenging a set-off against payments due; or seeking other relief with respect to the terms of the Contract.

10. *Claim*

a. A demand or assertion by Owner directly to Contractor, duly submitted in compliance with the procedural requirements set forth herein, seeking an adjustment of Contract Price or Contract Times; contesting an initial decision by Engineer concerning the

Copyright© 2018 National Society of Professional Engineers, American Council of Engineering Companies, and American Society of Civil Engineers. All rights reserved.

requirements of the Contract Documents or the acceptability of Work under the Contract Documents; contesting Engineer's decision regarding a Change Proposal; seeking resolution of a contractual issue that Engineer has declined to address; or seeking other relief with respect to the terms of the Contract.

b. A demand or assertion by Contractor directly to Owner, duly submitted in compliance with the procedural requirements set forth herein, contesting Engineer's decision regarding a Change Proposal, or seeking resolution of a contractual issue that Engineer has declined to address.

c. A demand or assertion by Owner or Contractor, duly submitted in compliance with the procedural requirements set forth herein, made pursuant to Paragraph 12.01.A.4, concerning disputes arising after Engineer has issued a recommendation of final payment.

d. A demand for money or services by a third party is not a Claim.

11. *Constituent of Concern*—Asbestos, petroleum, radioactive materials, polychlorinated biphenyls (PCBs), lead-based paint (as defined by the HUD/EPA standard), hazardous waste, and any substance, product, waste, or other material of any nature whatsoever that is or becomes listed, regulated, or addressed pursuant to Laws and Regulations regulating, relating to, or imposing liability or standards of conduct concerning, any hazardous, toxic, or dangerous waste, substance, or material.

12. *Contract*—The entire and integrated written contract between Owner and Contractor concerning the Work.

13. *Contract Documents*—Those items so designated in the Agreement, and which together comprise the Contract.

14. *Contract Price*—The money that Owner has agreed to pay Contractor for completion of the Work in accordance with the Contract Documents.

15. *Contract Times*—The number of days or the dates by which Contractor shall: (a) achieve Milestones, if any; (b) achieve Substantial Completion; and (c) complete the Work.

16. *Contractor*—The individual or entity with which Owner has contracted for performance of the Work.

17. *Cost of the Work*—See Paragraph 13.01 for definition.

18. *Drawings*—The part of the Contract that graphically shows the scope, extent, and character of the Work to be performed by Contractor.

19. *Effective Date of the Contract*—The date, indicated in the Agreement, on which the Contract becomes effective.

20. *Electronic Document*—Any Project-related correspondence, attachments to correspondence, data, documents, drawings, information, or graphics, including but not limited to Shop Drawings and other Submittals, that are in an electronic or digital format.

21. *Electronic Means*—Electronic mail (email), upload/download from a secure Project website, or other communications methods that allow: (a) the transmission or communication of Electronic Documents; (b) the documentation of transmissions, including sending and receipt; (c) printing of the transmitted Electronic Document by the

Copyright© 2018 National Society of Professional Engineers, American Council of Engineering Companies, and American Society of Civil Engineers. All rights reserved.

recipient; (d) the storage and archiving of the Electronic Document by sender and recipient; and (e) the use by recipient of the Electronic Document for purposes permitted by this Contract. Electronic Means does not include the use of text messaging, or of Facebook, Twitter, Instagram, or similar social media services for transmission of Electronic Documents.

22. *Engineer*—The individual or entity named as such in the Agreement.

23. *Field Order*—A written order issued by Engineer which requires minor changes in the Work but does not change the Contract Price or the Contract Times.

24. *Hazardous Environmental Condition*—The presence at the Site of Constituents of Concern in such quantities or circumstances that may present a danger to persons or property exposed thereto.

    a. The presence at the Site of materials that are necessary for the execution of the Work, or that are to be incorporated into the Work, and that are controlled and contained pursuant to industry practices, Laws and Regulations, and the requirements of the Contract, is not a Hazardous Environmental Condition.

    b. The presence of Constituents of Concern that are to be removed or remediated as part of the Work is not a Hazardous Environmental Condition.

    c. The presence of Constituents of Concern as part of the routine, anticipated, and obvious working conditions at the Site, is not a Hazardous Environmental Condition.

25. *Laws and Regulations; Laws or Regulations*—Any and all applicable laws, statutes, rules, regulations, ordinances, codes, and binding decrees, resolutions, and orders of any and all governmental bodies, agencies, authorities, and courts having jurisdiction.

26. *Liens*—Charges, security interests, or encumbrances upon Contract-related funds, real property, or personal property.

27. *Milestone*—A principal event in the performance of the Work that the Contract requires Contractor to achieve by an intermediate completion date, or by a time prior to Substantial Completion of all the Work.

28. *Notice of Award*—The written notice by Owner to a Bidder of Owner's acceptance of the Bid.

29. *Notice to Proceed*—A written notice by Owner to Contractor fixing the date on which the Contract Times will commence to run and on which Contractor shall start to perform the Work.

30. *Owner*—The individual or entity with which Contractor has contracted regarding the Work, and which has agreed to pay Contractor for the performance of the Work, pursuant to the terms of the Contract.

31. *Progress Schedule*—A schedule, prepared and maintained by Contractor, describing the sequence and duration of the activities comprising Contractor's plan to accomplish the Work within the Contract Times.

32. *Project*—The total undertaking to be accomplished for Owner by engineers, contractors, and others, including planning, study, design, construction, testing, commissioning, and start-up, and of which the Work to be performed under the Contract Documents is a part.

Copyright© 2018 National Society of Professional Engineers, American Council of Engineering Companies, and American Society of Civil Engineers. All rights reserved.

33. *Resident Project Representative*—The authorized representative of Engineer assigned to assist Engineer at the Site. As used herein, the term Resident Project Representative (RPR) includes any assistants or field staff of Resident Project Representative.

34. *Samples*—Physical examples of materials, equipment, or workmanship that are representative of some portion of the Work and that establish the standards by which such portion of the Work will be judged.

35. *Schedule of Submittals*—A schedule, prepared and maintained by Contractor, of required submittals and the time requirements for Engineer's review of the submittals.

36. *Schedule of Values*—A schedule, prepared and maintained by Contractor, allocating portions of the Contract Price to various portions of the Work and used as the basis for reviewing Contractor's Applications for Payment.

37. *Shop Drawings*—All drawings, diagrams, illustrations, schedules, and other data or information that are specifically prepared or assembled by or for Contractor and submitted by Contractor to illustrate some portion of the Work. Shop Drawings, whether approved or not, are not Drawings and are not Contract Documents.

38. *Site*—Lands or areas indicated in the Contract Documents as being furnished by Owner upon which the Work is to be performed, including rights-of-way and easements, and such other lands or areas furnished by Owner which are designated for the use of Contractor.

39. *Specifications*—The part of the Contract that consists of written requirements for materials, equipment, systems, standards, and workmanship as applied to the Work, and certain administrative requirements and procedural matters applicable to the Work.

40. *Subcontractor*—An individual or entity having a direct contract with Contractor or with any other Subcontractor for the performance of a part of the Work.

41. *Submittal*—A written or graphic document, prepared by or for Contractor, which the Contract Documents require Contractor to submit to Engineer, or that is indicated as a Submittal in the Schedule of Submittals accepted by Engineer. Submittals may include Shop Drawings and Samples; schedules; product data; Owner-delegated designs; sustainable design information; information on special procedures; testing plans; results of tests and evaluations, source quality-control testing and inspections, and field or Site quality-control testing and inspections; warranties and certifications; Suppliers' instructions and reports; records of delivery of spare parts and tools; operations and maintenance data; Project photographic documentation; record documents; and other such documents required by the Contract Documents. Submittals, whether or not approved or accepted by Engineer, are not Contract Documents. Change Proposals, Change Orders, Claims, notices, Applications for Payment, and requests for interpretation or clarification are not Submittals.

42. *Substantial Completion*—The time at which the Work (or a specified part thereof) has progressed to the point where, in the opinion of Engineer, the Work (or a specified part thereof) is sufficiently complete, in accordance with the Contract Documents, so that the Work (or a specified part thereof) can be utilized for the purposes for which it is intended. The terms "substantially complete" and "substantially completed" as applied to all or part of the Work refer to Substantial Completion of such Work.

Copyright© 2018 National Society of Professional Engineers, American Council of Engineering Companies, and American Society of Civil Engineers. All rights reserved.

43. *Successful Bidder*—The Bidder to which the Owner makes an award of contract.

44. *Supplementary Conditions*—The part of the Contract that amends or supplements these General Conditions.

45. *Supplier*—A manufacturer, fabricator, supplier, distributor, or vendor having a direct contract with Contractor or with any Subcontractor to furnish materials or equipment to be incorporated in the Work by Contractor or a Subcontractor.

46. *Technical Data*

    a. Those items expressly identified as Technical Data in the Supplementary Conditions, with respect to either (1) existing subsurface conditions at or adjacent to the Site, or existing physical conditions at or adjacent to the Site including existing surface or subsurface structures (except Underground Facilities) or (2) Hazardous Environmental Conditions at the Site.

    b. If no such express identifications of Technical Data have been made with respect to conditions at the Site, then Technical Data is defined, with respect to conditions at the Site under Paragraphs 5.03, 5.04, and 5.06, as the data contained in boring logs, recorded measurements of subsurface water levels, assessments of the condition of subsurface facilities, laboratory test results, and other factual, objective information regarding conditions at the Site that are set forth in any geotechnical, environmental, or other Site or facilities conditions report prepared for the Project and made available to Contractor.

    c. Information and data regarding the presence or location of Underground Facilities are not intended to be categorized, identified, or defined as Technical Data, and instead Underground Facilities are shown or indicated on the Drawings.

47. *Underground Facilities*—All active or not-in-service underground lines, pipelines, conduits, ducts, encasements, cables, wires, manholes, vaults, tanks, tunnels, or other such facilities or systems at the Site, including but not limited to those facilities or systems that produce, transmit, distribute, or convey telephone or other communications, cable television, fiber optic transmissions, power, electricity, light, heat, gases, oil, crude oil products, liquid petroleum products, water, steam, waste, wastewater, storm water, other liquids or chemicals, or traffic or other control systems. An abandoned facility or system is not an Underground Facility.

48. *Unit Price Work*—Work to be paid for on the basis of unit prices.

49. *Work*—The entire construction or the various separately identifiable parts thereof required to be provided under the Contract Documents. Work includes and is the result of performing or providing all labor, services, and documentation necessary to produce such construction; furnishing, installing, and incorporating all materials and equipment into such construction; and may include related services such as testing, start-up, and commissioning, all as required by the Contract Documents.

50. *Work Change Directive*—A written directive to Contractor issued on or after the Effective Date of the Contract, signed by Owner and recommended by Engineer, ordering an addition, deletion, or revision in the Work.

Copyright© 2018 National Society of Professional Engineers, American Council of Engineering Companies, and American Society of Civil Engineers. All rights reserved.

1.02 *Terminology*

A. The words and terms discussed in Paragraphs 1.02.B, C, D, and E are not defined terms that require initial capital letters, but, when used in the Bidding Requirements or Contract Documents, have the indicated meaning.

B. *Intent of Certain Terms or Adjectives*: The Contract Documents include the terms "as allowed," "as approved," "as ordered," "as directed" or terms of like effect or import to authorize an exercise of professional judgment by Engineer. In addition, the adjectives "reasonable," "suitable," "acceptable," "proper," "satisfactory," or adjectives of like effect or import are used to describe an action or determination of Engineer as to the Work. It is intended that such exercise of professional judgment, action, or determination will be solely to evaluate, in general, the Work for compliance with the information in the Contract Documents and with the design concept of the Project as a functioning whole as shown or indicated in the Contract Documents (unless there is a specific statement indicating otherwise). The use of any such term or adjective is not intended to and shall not be effective to assign to Engineer any duty or authority to supervise or direct the performance of the Work, or any duty or authority to undertake responsibility contrary to the provisions of Article 10 or any other provision of the Contract Documents.

C. *Day*: The word "day" means a calendar day of 24 hours measured from midnight to the next midnight.

D. *Defective*: The word "defective," when modifying the word "Work," refers to Work that is unsatisfactory, faulty, or deficient in that it:

1. does not conform to the Contract Documents;

2. does not meet the requirements of any applicable inspection, reference standard, test, or approval referred to in the Contract Documents; or

3. has been damaged prior to Engineer's recommendation of final payment (unless responsibility for the protection thereof has been assumed by Owner at Substantial Completion in accordance with Paragraph 15.03 or Paragraph 15.04).

E. *Furnish, Install, Perform, Provide*

1. The word "furnish," when used in connection with services, materials, or equipment, means to supply and deliver said services, materials, or equipment to the Site (or some other specified location) ready for use or installation and in usable or operable condition.

2. The word "install," when used in connection with services, materials, or equipment, means to put into use or place in final position said services, materials, or equipment complete and ready for intended use.

3. The words "perform" or "provide," when used in connection with services, materials, or equipment, means to furnish and install said services, materials, or equipment complete and ready for intended use.

4. If the Contract Documents establish an obligation of Contractor with respect to specific services, materials, or equipment, but do not expressly use any of the four words "furnish," "install," "perform," or "provide," then Contractor shall furnish and install said services, materials, or equipment complete and ready for intended use.

Copyright© 2018 National Society of Professional Engineers, American Council of Engineering Companies, and American Society of Civil Engineers. All rights reserved.

F. *Contract Price or Contract Times*: References to a change in "Contract Price or Contract Times" or "Contract Times or Contract Price" or similar, indicate that such change applies to (1) Contract Price, (2) Contract Times, or (3) both Contract Price and Contract Times, as warranted, even if the term "or both" is not expressed.

G. Unless stated otherwise in the Contract Documents, words or phrases that have a well-known technical or construction industry or trade meaning are used in the Contract Documents in accordance with such recognized meaning.

ARTICLE 2—PRELIMINARY MATTERS

2.01 *Delivery of Performance and Payment Bonds; Evidence of Insurance*

A. *Performance and Payment Bonds*: When Contractor delivers the signed counterparts of the Agreement to Owner, Contractor shall also deliver to Owner the performance bond and payment bond (if the Contract requires Contractor to furnish such bonds).

B. *Evidence of Contractor's Insurance*: When Contractor delivers the signed counterparts of the Agreement to Owner, Contractor shall also deliver to Owner, with copies to each additional insured (as identified in the Contract), the certificates, endorsements, and other evidence of insurance required to be provided by Contractor in accordance with Article 6, except to the extent the Supplementary Conditions expressly establish other dates for delivery of specific insurance policies.

C. *Evidence of Owner's Insurance*: After receipt of the signed counterparts of the Agreement and all required bonds and insurance documentation, Owner shall promptly deliver to Contractor, with copies to each additional insured (as identified in the Contract), the certificates and other evidence of insurance required to be provided by Owner under Article 6.

2.02 *Copies of Documents*

A. Owner shall furnish to Contractor four printed copies of the Contract (including one fully signed counterpart of the Agreement), and one copy in electronic portable document format (PDF). Additional printed copies will be furnished upon request at the cost of reproduction.

B. Owner shall maintain and safeguard at least one original printed record version of the Contract, including Drawings and Specifications signed and sealed by Engineer and other design professionals. Owner shall make such original printed record version of the Contract available to Contractor for review. Owner may delegate the responsibilities under this provision to Engineer.

2.03 *Before Starting Construction*

A. *Preliminary Schedules*: Within 10 days after the Effective Date of the Contract (or as otherwise required by the Contract Documents), Contractor shall submit to Engineer for timely review:

1. a preliminary Progress Schedule indicating the times (numbers of days or dates) for starting and completing the various stages of the Work, including any Milestones specified in the Contract;

2. a preliminary Schedule of Submittals; and

3. a preliminary Schedule of Values for all of the Work which includes quantities and prices of items which when added together equal the Contract Price and subdivides the Work

Copyright© 2018 National Society of Professional Engineers, American Council of Engineering Companies, and American Society of Civil Engineers. All rights reserved.

into component parts in sufficient detail to serve as the basis for progress payments during performance of the Work. Such prices will include an appropriate amount of overhead and profit applicable to each item of Work.

2.04 *Preconstruction Conference; Designation of Authorized Representatives*

A. Before any Work at the Site is started, a conference attended by Owner, Contractor, Engineer, and others as appropriate will be held to establish a working understanding among the parties as to the Work, and to discuss the schedules referred to in Paragraph 2.03.A, procedures for handling Shop Drawings, Samples, and other Submittals, processing Applications for Payment, electronic or digital transmittals, and maintaining required records.

B. At this conference Owner and Contractor each shall designate, in writing, a specific individual to act as its authorized representative with respect to the services and responsibilities under the Contract. Such individuals shall have the authority to transmit and receive information, render decisions relative to the Contract, and otherwise act on behalf of each respective party.

2.05 *Acceptance of Schedules*

A. At least 10 days before submission of the first Application for Payment a conference, attended by Contractor, Engineer, and others as appropriate, will be held to review the schedules submitted in accordance with Paragraph 2.03.A. No progress payment will be made to Contractor until acceptable schedules are submitted to Engineer.

1. The Progress Schedule will be acceptable to Engineer if it provides an orderly progression of the Work to completion within the Contract Times. Such acceptance will not impose on Engineer responsibility for the Progress Schedule, for sequencing, scheduling, or progress of the Work, nor interfere with or relieve Contractor from Contractor's full responsibility therefor.

2. Contractor's Schedule of Submittals will be acceptable to Engineer if it provides a workable arrangement for reviewing and processing the required submittals.

3. Contractor's Schedule of Values will be acceptable to Engineer as to form and substance if it provides a reasonable allocation of the Contract Price to the component parts of the Work.

4. If a schedule is not acceptable, Contractor will have an additional 10 days to revise and resubmit the schedule.

2.06 *Electronic Transmittals*

A. Except as otherwise stated elsewhere in the Contract, the Owner, Engineer, and Contractor may send, and shall accept, Electronic Documents transmitted by Electronic Means.

B. If the Contract does not establish protocols for Electronic Means, then Owner, Engineer, and Contractor shall jointly develop such protocols.

C. Subject to any governing protocols for Electronic Means, when transmitting Electronic Documents by Electronic Means, the transmitting party makes no representations as to long-term compatibility, usability, or readability of the Electronic Documents resulting from the recipient's use of software application packages, operating systems, or computer hardware differing from those used in the drafting or transmittal of the Electronic Documents.

Copyright© 2018 National Society of Professional Engineers, American Council of Engineering Companies, and American Society of Civil Engineers. All rights reserved.

ARTICLE 3—CONTRACT DOCUMENTS: INTENT, REQUIREMENTS, REUSE

3.01 *Intent*

A. The Contract Documents are complementary; what is required by one Contract Document is as binding as if required by all.

B. It is the intent of the Contract Documents to describe a functionally complete Project (or part thereof) to be constructed in accordance with the Contract Documents.

C. Unless otherwise stated in the Contract Documents, if there is a discrepancy between the electronic versions of the Contract Documents (including any printed copies derived from such electronic versions) and the printed record version, the printed record version will govern.

D. The Contract supersedes prior negotiations, representations, and agreements, whether written or oral.

E. Engineer will issue clarifications and interpretations of the Contract Documents as provided herein.

F. Any provision or part of the Contract Documents held to be void or unenforceable under any Law or Regulation will be deemed stricken, and all remaining provisions will continue to be valid and binding upon Owner and Contractor, which agree that the Contract Documents will be reformed to replace such stricken provision or part thereof with a valid and enforceable provision that comes as close as possible to expressing the intention of the stricken provision.

G. Nothing in the Contract Documents creates:

1. any contractual relationship between Owner or Engineer and any Subcontractor, Supplier, or other individual or entity performing or furnishing any of the Work, for the benefit of such Subcontractor, Supplier, or other individual or entity; or

2. any obligation on the part of Owner or Engineer to pay or to see to the payment of any money due any such Subcontractor, Supplier, or other individual or entity, except as may otherwise be required by Laws and Regulations.

3.02 *Reference Standards*

A. *Standards Specifications, Codes, Laws and Regulations*

1. Reference in the Contract Documents to standard specifications, manuals, reference standards, or codes of any technical society, organization, or association, or to Laws or Regulations, whether such reference be specific or by implication, means the standard specification, manual, reference standard, code, or Laws or Regulations in effect at the time of opening of Bids (or on the Effective Date of the Contract if there were no Bids), except as may be otherwise specifically stated in the Contract Documents.

2. No provision of any such standard specification, manual, reference standard, or code, and no instruction of a Supplier, will be effective to change the duties or responsibilities of Owner, Contractor, or Engineer from those set forth in the part of the Contract Documents prepared by or for Engineer. No such provision or instruction shall be effective to assign to Owner or Engineer any duty or authority to supervise or direct the performance of the Work, or any duty or authority to undertake responsibility

Copyright© 2018 National Society of Professional Engineers, American Council of Engineering Companies, and American Society of Civil Engineers. All rights reserved.

inconsistent with the provisions of the part of the Contract Documents prepared by or for Engineer.

3.03 *Reporting and Resolving Discrepancies*

A. *Reporting Discrepancies*

1. *Contractor's Verification of Figures and Field Measurements*: Before undertaking each part of the Work, Contractor shall carefully study the Contract Documents, and check and verify pertinent figures and dimensions therein, particularly with respect to applicable field measurements. Contractor shall promptly report in writing to Engineer any conflict, error, ambiguity, or discrepancy that Contractor discovers, or has actual knowledge of, and shall not proceed with any Work affected thereby until the conflict, error, ambiguity, or discrepancy is resolved by a clarification or interpretation by Engineer, or by an amendment or supplement to the Contract issued pursuant to Paragraph 11.01.

2. *Contractor's Review of Contract Documents*: If, before or during the performance of the Work, Contractor discovers any conflict, error, ambiguity, or discrepancy within the Contract Documents, or between the Contract Documents and (a) any applicable Law or Regulation, (b) actual field conditions, (c) any standard specification, manual, reference standard, or code, or (d) any instruction of any Supplier, then Contractor shall promptly report it to Engineer in writing. Contractor shall not proceed with the Work affected thereby (except in an emergency as required by Paragraph 7.15) until the conflict, error, ambiguity, or discrepancy is resolved, by a clarification or interpretation by Engineer, or by an amendment or supplement to the Contract issued pursuant to Paragraph 11.01.

3. Contractor shall not be liable to Owner or Engineer for failure to report any conflict, error, ambiguity, or discrepancy in the Contract Documents unless Contractor had actual knowledge thereof.

B. *Resolving Discrepancies*

1. Except as may be otherwise specifically stated in the Contract Documents, the provisions of the part of the Contract Documents prepared by or for Engineer take precedence in resolving any conflict, error, ambiguity, or discrepancy between such provisions of the Contract Documents and:

a. the provisions of any standard specification, manual, reference standard, or code, or the instruction of any Supplier (whether or not specifically incorporated by reference as a Contract Document); or

b. the provisions of any Laws or Regulations applicable to the performance of the Work (unless such an interpretation of the provisions of the Contract Documents would result in violation of such Law or Regulation).

3.04 *Requirements of the Contract Documents*

A. During the performance of the Work and until final payment, Contractor and Owner shall submit to the Engineer in writing all matters in question concerning the requirements of the Contract Documents (sometimes referred to as requests for information or interpretation—RFIs), or relating to the acceptability of the Work under the Contract Documents, as soon as possible after such matters arise. Engineer will be the initial interpreter of the requirements of the Contract Documents, and judge of the acceptability of the Work.

Copyright© 2018 National Society of Professional Engineers, American Council of Engineering Companies, and American Society of Civil Engineers. All rights reserved.

B. Engineer will, with reasonable promptness, render a written clarification, interpretation, or decision on the issue submitted, or initiate an amendment or supplement to the Contract Documents. Engineer's written clarification, interpretation, or decision will be final and binding on Contractor, unless it appeals by submitting a Change Proposal, and on Owner, unless it appeals by filing a Claim.

C. If a submitted matter in question concerns terms and conditions of the Contract Documents that do not involve (1) the performance or acceptability of the Work under the Contract Documents, (2) the design (as set forth in the Drawings, Specifications, or otherwise), or (3) other engineering or technical matters, then Engineer will promptly notify Owner and Contractor in writing that Engineer is unable to provide a decision or interpretation. If Owner and Contractor are unable to agree on resolution of such a matter in question, either party may pursue resolution as provided in Article 12.

3.05 *Reuse of Documents*

A. Contractor and its Subcontractors and Suppliers shall not:

1. have or acquire any title to or ownership rights in any of the Drawings, Specifications, or other documents (or copies of any thereof) prepared by or bearing the seal of Engineer or its consultants, including electronic media versions, or reuse any such Drawings, Specifications, other documents, or copies thereof on extensions of the Project or any other project without written consent of Owner and Engineer and specific written verification or adaptation by Engineer; or

2. have or acquire any title or ownership rights in any other Contract Documents, reuse any such Contract Documents for any purpose without Owner's express written consent, or violate any copyrights pertaining to such Contract Documents.

B. The prohibitions of this Paragraph 3.05 will survive final payment, or termination of the Contract. Nothing herein precludes Contractor from retaining copies of the Contract Documents for record purposes.

ARTICLE 4—COMMENCEMENT AND PROGRESS OF THE WORK

4.01 *Commencement of Contract Times; Notice to Proceed*

A. The Contract Times will commence to run on the 30th day after the Effective Date of the Contract or, if a Notice to Proceed is given, on the day indicated in the Notice to Proceed. A Notice to Proceed may be given at any time within 30 days after the Effective Date of the Contract. In no event will the Contract Times commence to run later than the 60th day after the day of Bid opening or the 30th day after the Effective Date of the Contract, whichever date is earlier.

4.02 *Starting the Work*

A. Contractor shall start to perform the Work on the date when the Contract Times commence to run. No Work may be done at the Site prior to such date.

4.03 *Reference Points*

A. Owner shall provide engineering surveys to establish reference points for construction which in Engineer's judgment are necessary to enable Contractor to proceed with the Work. Contractor shall be responsible for laying out the Work, shall protect and preserve the

Copyright© 2018 National Society of Professional Engineers, American Council of Engineering Companies, and American Society of Civil Engineers. All rights reserved.

established reference points and property monuments, and shall make no changes or relocations without the prior written approval of Owner. Contractor shall report to Engineer whenever any reference point or property monument is lost or destroyed or requires relocation because of necessary changes in grades or locations, and shall be responsible for the accurate replacement or relocation of such reference points or property monuments by professionally qualified personnel.

4.04 *Progress Schedule*

A. Contractor shall adhere to the Progress Schedule established in accordance with Paragraph 2.05 as it may be adjusted from time to time as provided below.

1. Contractor shall submit to Engineer for acceptance (to the extent indicated in Paragraph 2.05) proposed adjustments in the Progress Schedule that will not result in changing the Contract Times.

2. Proposed adjustments in the Progress Schedule that will change the Contract Times must be submitted in accordance with the requirements of Article 11.

B. Contractor shall carry on the Work and adhere to the Progress Schedule during all disputes or disagreements with Owner. No Work will be delayed or postponed pending resolution of any disputes or disagreements, or during any appeal process, except as permitted by Paragraph 16.04, or as Owner and Contractor may otherwise agree in writing.

4.05 *Delays in Contractor's Progress*

A. If Owner, Engineer, or anyone for whom Owner is responsible, delays, disrupts, or interferes with the performance or progress of the Work, then Contractor shall be entitled to an equitable adjustment in Contract Price or Contract Times.

B. Contractor shall not be entitled to an adjustment in Contract Price or Contract Times for delay, disruption, or interference caused by or within the control of Contractor. Delay, disruption, and interference attributable to and within the control of a Subcontractor or Supplier shall be deemed to be within the control of Contractor.

C. If Contractor's performance or progress is delayed, disrupted, or interfered with by unanticipated causes not the fault of and beyond the control of Owner, Contractor, and those for which they are responsible, then Contractor shall be entitled to an equitable adjustment in Contract Times. Such an adjustment will be Contractor's sole and exclusive remedy for the delays, disruption, and interference described in this paragraph. Causes of delay, disruption, or interference that may give rise to an adjustment in Contract Times under this paragraph include but are not limited to the following:

1. Severe and unavoidable natural catastrophes such as fires, floods, epidemics, and earthquakes;

2. Abnormal weather conditions;

3. Acts or failures to act of third-party utility owners or other third-party entities (other than those third-party utility owners or other third-party entities performing other work at or adjacent to the Site as arranged by or under contract with Owner, as contemplated in Article 8); and

4. Acts of war or terrorism.

Copyright© 2018 National Society of Professional Engineers, American Council of Engineering Companies, and American Society of Civil Engineers. All rights reserved.

D. Contractor's entitlement to an adjustment of Contract Times or Contract Price is limited as follows:

1. Contractor's entitlement to an adjustment of the Contract Times is conditioned on the delay, disruption, or interference adversely affecting an activity on the critical path to completion of the Work, as of the time of the delay, disruption, or interference.

2. Contractor shall not be entitled to an adjustment in Contract Price for any delay, disruption, or interference if such delay is concurrent with a delay, disruption, or interference caused by or within the control of Contractor. Such a concurrent delay by Contractor shall not preclude an adjustment of Contract Times to which Contractor is otherwise entitled.

3. Adjustments of Contract Times or Contract Price are subject to the provisions of Article 11.

E. Each Contractor request or Change Proposal seeking an increase in Contract Times or Contract Price must be supplemented by supporting data that sets forth in detail the following:

1. The circumstances that form the basis for the requested adjustment;

2. The date upon which each cause of delay, disruption, or interference began to affect the progress of the Work;

3. The date upon which each cause of delay, disruption, or interference ceased to affect the progress of the Work;

4. The number of days' increase in Contract Times claimed as a consequence of each such cause of delay, disruption, or interference; and

5. The impact on Contract Price, in accordance with the provisions of Paragraph 11.07.

Contractor shall also furnish such additional supporting documentation as Owner or Engineer may require including, where appropriate, a revised progress schedule indicating all the activities affected by the delay, disruption, or interference, and an explanation of the effect of the delay, disruption, or interference on the critical path to completion of the Work.

F. Delays, disruption, and interference to the performance or progress of the Work resulting from the existence of a differing subsurface or physical condition, an Underground Facility that was not shown or indicated by the Contract Documents, or not shown or indicated with reasonable accuracy, and those resulting from Hazardous Environmental Conditions, are governed by Article 5, together with the provisions of Paragraphs 4.05.D and 4.05.E.

G. Paragraph 8.03 addresses delays, disruption, and interference to the performance or progress of the Work resulting from the performance of certain other work at or adjacent to the Site.

ARTICLE 5—SITE; SUBSURFACE AND PHYSICAL CONDITIONS; HAZARDOUS ENVIRONMENTAL CONDITIONS

5.01 *Availability of Lands*

A. Owner shall furnish the Site. Owner shall notify Contractor in writing of any encumbrances or restrictions not of general application but specifically related to use of the Site with which Contractor must comply in performing the Work.

Copyright© 2018 National Society of Professional Engineers, American Council of Engineering Companies, and American Society of Civil Engineers. All rights reserved.

B. Upon reasonable written request, Owner shall furnish Contractor with a current statement of record legal title and legal description of the lands upon which permanent improvements are to be made and Owner's interest therein as necessary for giving notice of or filing a mechanic's or construction lien against such lands in accordance with applicable Laws and Regulations.

C. Contractor shall provide for all additional lands and access thereto that may be required for temporary construction facilities or storage of materials and equipment.

5.02 *Use of Site and Other Areas*

A. *Limitation on Use of Site and Other Areas*

1. Contractor shall confine construction equipment, temporary construction facilities, the storage of materials and equipment, and the operations of workers to the Site, adjacent areas that Contractor has arranged to use through construction easements or otherwise, and other adjacent areas permitted by Laws and Regulations, and shall not unreasonably encumber the Site and such other adjacent areas with construction equipment or other materials or equipment. Contractor shall assume full responsibility for (a) damage to the Site; (b) damage to any such other adjacent areas used for Contractor's operations; (c) damage to any other adjacent land or areas, or to improvements, structures, utilities, or similar facilities located at such adjacent lands or areas; and (d) for injuries and losses sustained by the owners or occupants of any such land or areas; provided that such damage or injuries result from the performance of the Work or from other actions or conduct of the Contractor or those for which Contractor is responsible.

2. If a damage or injury claim is made by the owner or occupant of any such land or area because of the performance of the Work, or because of other actions or conduct of the Contractor or those for which Contractor is responsible, Contractor shall (a) take immediate corrective or remedial action as required by Paragraph 7.13, or otherwise; (b) promptly attempt to settle the claim as to all parties through negotiations with such owner or occupant, or otherwise resolve the claim by arbitration or other dispute resolution proceeding, or in a court of competent jurisdiction; and (c) to the fullest extent permitted by Laws and Regulations, indemnify and hold harmless Owner and Engineer, and the officers, directors, members, partners, employees, agents, consultants and subcontractors of each and any of them, from and against any such claim, and against all costs, losses, and damages (including but not limited to all fees and charges of engineers, architects, attorneys, and other professionals and all court or arbitration or other dispute resolution costs) arising out of or relating to any claim or action, legal or equitable, brought by any such owner or occupant against Owner, Engineer, or any other party indemnified hereunder to the extent caused directly or indirectly, in whole or in part by, or based upon, Contractor's performance of the Work, or because of other actions or conduct of the Contractor or those for which Contractor is responsible.

B. *Removal of Debris During Performance of the Work*: During the progress of the Work the Contractor shall keep the Site and other adjacent areas free from accumulations of waste materials, rubbish, and other debris. Removal and disposal of such waste materials, rubbish, and other debris will conform to applicable Laws and Regulations.

C. *Cleaning*: Prior to Substantial Completion of the Work Contractor shall clean the Site and the Work and make it ready for utilization by Owner. At the completion of the Work Contractor shall remove from the Site and adjacent areas all tools, appliances, construction equipment

Copyright© 2018 National Society of Professional Engineers, American Council of Engineering Companies, and American Society of Civil Engineers. All rights reserved.

and machinery, and surplus materials and shall restore to original condition all property not designated for alteration by the Contract Documents.

D. *Loading of Structures*: Contractor shall not load nor permit any part of any structure to be loaded in any manner that will endanger the structure, nor shall Contractor subject any part of the Work or adjacent structures or land to stresses or pressures that will endanger them.

5.03 *Subsurface and Physical Conditions*

A. *Reports and Drawings*: The Supplementary Conditions identify:

1. Those reports of explorations and tests of subsurface conditions at or adjacent to the Site that contain Technical Data;

2. Those drawings of existing physical conditions at or adjacent to the Site, including those drawings depicting existing surface or subsurface structures at or adjacent to the Site (except Underground Facilities), that contain Technical Data; and

3. Technical Data contained in such reports and drawings.

B. *Underground Facilities*: Underground Facilities are shown or indicated on the Drawings, pursuant to Paragraph 5.05, and not in the drawings referred to in Paragraph 5.03.A. Information and data regarding the presence or location of Underground Facilities are not intended to be categorized, identified, or defined as Technical Data.

C. *Reliance by Contractor on Technical Data*: Contractor may rely upon the accuracy of the Technical Data expressly identified in the Supplementary Conditions with respect to such reports and drawings, but such reports and drawings are not Contract Documents. If no such express identification has been made, then Contractor may rely upon the accuracy of the Technical Data as defined in Paragraph 1.01.A.46.b.

D. *Limitations of Other Data and Documents*: Except for such reliance on Technical Data, Contractor may not rely upon or make any claim against Owner or Engineer, or any of their officers, directors, members, partners, employees, agents, consultants, or subcontractors, with respect to:

1. the completeness of such reports and drawings for Contractor's purposes, including, but not limited to, any aspects of the means, methods, techniques, sequences, and procedures of construction to be employed by Contractor, and safety precautions and programs incident thereto;

2. other data, interpretations, opinions, and information contained in such reports or shown or indicated in such drawings;

3. the contents of other Site-related documents made available to Contractor, such as record drawings from other projects at or adjacent to the Site, or Owner's archival documents concerning the Site; or

4. any Contractor interpretation of or conclusion drawn from any Technical Data or any such other data, interpretations, opinions, or information.

Copyright© 2018 National Society of Professional Engineers, American Council of Engineering Companies, and American Society of Civil Engineers. All rights reserved.

5.04 *Differing Subsurface or Physical Conditions*

A. *Notice by Contractor*: If Contractor believes that any subsurface or physical condition that is uncovered or revealed at the Site:

1. is of such a nature as to establish that any Technical Data on which Contractor is entitled to rely as provided in Paragraph 5.03 is materially inaccurate;

2. is of such a nature as to require a change in the Drawings or Specifications;

3. differs materially from that shown or indicated in the Contract Documents; or

4. is of an unusual nature, and differs materially from conditions ordinarily encountered and generally recognized as inherent in work of the character provided for in the Contract Documents;

then Contractor shall, promptly after becoming aware thereof and before further disturbing the subsurface or physical conditions or performing any Work in connection therewith (except in an emergency as required by Paragraph 7.15), notify Owner and Engineer in writing about such condition. Contractor shall not further disturb such condition or perform any Work in connection therewith (except with respect to an emergency) until receipt of a written statement permitting Contractor to do so.

B. *Engineer's Review*: After receipt of written notice as required by the preceding paragraph, Engineer will promptly review the subsurface or physical condition in question; determine whether it is necessary for Owner to obtain additional exploration or tests with respect to the condition; conclude whether the condition falls within any one or more of the differing site condition categories in Paragraph 5.04.A; obtain any pertinent cost or schedule information from Contractor; prepare recommendations to Owner regarding the Contractor's resumption of Work in connection with the subsurface or physical condition in question and the need for any change in the Drawings or Specifications; and advise Owner in writing of Engineer's findings, conclusions, and recommendations.

C. *Owner's Statement to Contractor Regarding Site Condition*: After receipt of Engineer's written findings, conclusions, and recommendations, Owner shall issue a written statement to Contractor (with a copy to Engineer) regarding the subsurface or physical condition in question, addressing the resumption of Work in connection with such condition, indicating whether any change in the Drawings or Specifications will be made, and adopting or rejecting Engineer's written findings, conclusions, and recommendations, in whole or in part.

D. *Early Resumption of Work*: If at any time Engineer determines that Work in connection with the subsurface or physical condition in question may resume prior to completion of Engineer's review or Owner's issuance of its statement to Contractor, because the condition in question has been adequately documented, and analyzed on a preliminary basis, then the Engineer may at its discretion instruct Contractor to resume such Work.

Copyright© 2018 National Society of Professional Engineers, American Council of Engineering Companies, and American Society of Civil Engineers. All rights reserved.

E. *Possible Price and Times Adjustments*

1. Contractor shall be entitled to an equitable adjustment in Contract Price or Contract Times, to the extent that the existence of a differing subsurface or physical condition, or any related delay, disruption, or interference, causes an increase or decrease in Contractor's cost of, or time required for, performance of the Work; subject, however, to the following:

   a. Such condition must fall within any one or more of the categories described in Paragraph 5.04.A;

   b. With respect to Work that is paid for on a unit price basis, any adjustment in Contract Price will be subject to the provisions of Paragraph 13.03; and,

   c. Contractor's entitlement to an adjustment of the Contract Times is subject to the provisions of Paragraphs 4.05.D and 4.05.E.

2. Contractor shall not be entitled to any adjustment in the Contract Price or Contract Times with respect to a subsurface or physical condition if:

   a. Contractor knew of the existence of such condition at the time Contractor made a commitment to Owner with respect to Contract Price and Contract Times by the submission of a Bid or becoming bound under a negotiated contract, or otherwise;

   b. The existence of such condition reasonably could have been discovered or revealed as a result of any examination, investigation, exploration, test, or study of the Site and contiguous areas expressly required by the Bidding Requirements or Contract Documents to be conducted by or for Contractor prior to Contractor's making such commitment; or

   c. Contractor failed to give the written notice required by Paragraph 5.04.A.

3. If Owner and Contractor agree regarding Contractor's entitlement to and the amount or extent of any adjustment in the Contract Price or Contract Times, then any such adjustment will be set forth in a Change Order.

4. Contractor may submit a Change Proposal regarding its entitlement to or the amount or extent of any adjustment in the Contract Price or Contract Times, no later than 30 days after Owner's issuance of the Owner's written statement to Contractor regarding the subsurface or physical condition in question.

F. *Underground Facilities; Hazardous Environmental Conditions*: Paragraph 5.05 governs rights and responsibilities regarding the presence or location of Underground Facilities. Paragraph 5.06 governs rights and responsibilities regarding Hazardous Environmental Conditions. The provisions of Paragraphs 5.03 and 5.04 are not applicable to the presence or location of Underground Facilities, or to Hazardous Environmental Conditions.

5.05 *Underground Facilities*

A. *Contractor's Responsibilities*: Unless it is otherwise expressly provided in the Supplementary Conditions, the cost of all of the following are included in the Contract Price, and Contractor shall have full responsibility for:

1. reviewing and checking all information and data regarding existing Underground Facilities at the Site;

Copyright© 2018 National Society of Professional Engineers, American Council of Engineering Companies, and American Society of Civil Engineers. All rights reserved.

2. complying with applicable state and local utility damage prevention Laws and Regulations;

3. verifying the actual location of those Underground Facilities shown or indicated in the Contract Documents as being within the area affected by the Work, by exposing such Underground Facilities during the course of construction;

4. coordination of the Work with the owners (including Owner) of such Underground Facilities, during construction; and

5. the safety and protection of all existing Underground Facilities at the Site, and repairing any damage thereto resulting from the Work.

B. *Notice by Contractor*: If Contractor believes that an Underground Facility that is uncovered or revealed at the Site was not shown or indicated on the Drawings, or was not shown or indicated on the Drawings with reasonable accuracy, then Contractor shall, promptly after becoming aware thereof and before further disturbing conditions affected thereby or performing any Work in connection therewith (except in an emergency as required by Paragraph 7.15), notify Owner and Engineer in writing regarding such Underground Facility.

C. *Engineer's Review*: Engineer will:

1. promptly review the Underground Facility and conclude whether such Underground Facility was not shown or indicated on the Drawings, or was not shown or indicated with reasonable accuracy;

2. identify and communicate with the owner of the Underground Facility; prepare recommendations to Owner (and if necessary issue any preliminary instructions to Contractor) regarding the Contractor's resumption of Work in connection with the Underground Facility in question;

3. obtain any pertinent cost or schedule information from Contractor; determine the extent, if any, to which a change is required in the Drawings or Specifications to reflect and document the consequences of the existence or location of the Underground Facility; and

4. advise Owner in writing of Engineer's findings, conclusions, and recommendations.

During such time, Contractor shall be responsible for the safety and protection of such Underground Facility.

D. *Owner's Statement to Contractor Regarding Underground Facility*: After receipt of Engineer's written findings, conclusions, and recommendations, Owner shall issue a written statement to Contractor (with a copy to Engineer) regarding the Underground Facility in question addressing the resumption of Work in connection with such Underground Facility, indicating whether any change in the Drawings or Specifications will be made, and adopting or rejecting Engineer's written findings, conclusions, and recommendations in whole or in part.

E. *Early Resumption of Work*: If at any time Engineer determines that Work in connection with the Underground Facility may resume prior to completion of Engineer's review or Owner's issuance of its statement to Contractor, because the Underground Facility in question and conditions affected by its presence have been adequately documented, and analyzed on a preliminary basis, then the Engineer may at its discretion instruct Contractor to resume such Work.

Copyright© 2018 National Society of Professional Engineers, American Council of Engineering Companies, and American Society of Civil Engineers. All rights reserved.

F. *Possible Price and Times Adjustments*

1. Contractor shall be entitled to an equitable adjustment in the Contract Price or Contract Times, to the extent that any existing Underground Facility at the Site that was not shown or indicated on the Drawings, or was not shown or indicated with reasonable accuracy, or any related delay, disruption, or interference, causes an increase or decrease in Contractor's cost of, or time required for, performance of the Work; subject, however, to the following:

    a. With respect to Work that is paid for on a unit price basis, any adjustment in Contract Price will be subject to the provisions of Paragraph 13.03;

    b. Contractor's entitlement to an adjustment of the Contract Times is subject to the provisions of Paragraphs 4.05.D and 4.05.E; and

    c. Contractor gave the notice required in Paragraph 5.05.B.

2. If Owner and Contractor agree regarding Contractor's entitlement to and the amount or extent of any adjustment in the Contract Price or Contract Times, then any such adjustment will be set forth in a Change Order.

3. Contractor may submit a Change Proposal regarding its entitlement to or the amount or extent of any adjustment in the Contract Price or Contract Times, no later than 30 days after Owner's issuance of the Owner's written statement to Contractor regarding the Underground Facility in question.

4. The information and data shown or indicated on the Drawings with respect to existing Underground Facilities at the Site is based on information and data (a) furnished by the owners of such Underground Facilities, or by others, (b) obtained from available records, or (c) gathered in an investigation conducted in accordance with the current edition of ASCE 38, Standard Guideline for the Collection and Depiction of Existing Subsurface Utility Data, by the American Society of Civil Engineers. If such information or data is incorrect or incomplete, Contractor's remedies are limited to those set forth in this Paragraph 5.05.F.

5.06 *Hazardous Environmental Conditions at Site*

A. *Reports and Drawings*: The Supplementary Conditions identify:

1. those reports known to Owner relating to Hazardous Environmental Conditions that have been identified at or adjacent to the Site;

2. drawings known to Owner relating to Hazardous Environmental Conditions that have been identified at or adjacent to the Site; and

3. Technical Data contained in such reports and drawings.

Copyright© 2018 National Society of Professional Engineers, American Council of Engineering Companies, and American Society of Civil Engineers. All rights reserved.

B. *Reliance by Contractor on Technical Data Authorized*: Contractor may rely upon the accuracy of the Technical Data expressly identified in the Supplementary Conditions with respect to such reports and drawings, but such reports and drawings are not Contract Documents. If no such express identification has been made, then Contractor may rely on the accuracy of the Technical Data as defined in Paragraph 1.01.A.46.b. Except for such reliance on Technical Data, Contractor may not rely upon or make any claim against Owner or Engineer, or any of their officers, directors, members, partners, employees, agents, consultants, or subcontractors, with respect to:

1. the completeness of such reports and drawings for Contractor's purposes, including, but not limited to, any aspects of the means, methods, techniques, sequences and procedures of construction to be employed by Contractor, and safety precautions and programs incident thereto;

2. other data, interpretations, opinions, and information contained in such reports or shown or indicated in such drawings; or

3. any Contractor interpretation of or conclusion drawn from any Technical Data or any such other data, interpretations, opinions or information.

C. Contractor shall not be responsible for removing or remediating any Hazardous Environmental Condition encountered, uncovered, or revealed at the Site unless such removal or remediation is expressly identified in the Contract Documents to be within the scope of the Work.

D. Contractor shall be responsible for controlling, containing, and duly removing all Constituents of Concern brought to the Site by Contractor, Subcontractors, Suppliers, or anyone else for whom Contractor is responsible, and for any associated costs; and for the costs of removing and remediating any Hazardous Environmental Condition created by the presence of any such Constituents of Concern.

E. If Contractor encounters, uncovers, or reveals a Hazardous Environmental Condition whose removal or remediation is not expressly identified in the Contract Documents as being within the scope of the Work, or if Contractor or anyone for whom Contractor is responsible creates a Hazardous Environmental Condition, then Contractor shall immediately: (1) secure or otherwise isolate such condition; (2) stop all Work in connection with such condition and in any area affected thereby (except in an emergency as required by Paragraph 7.15); and (3) notify Owner and Engineer (and promptly thereafter confirm such notice in writing). Owner shall promptly consult with Engineer concerning the necessity for Owner to retain a qualified expert to evaluate such condition or take corrective action, if any. Promptly after consulting with Engineer, Owner shall take such actions as are necessary to permit Owner to timely obtain required permits and provide Contractor the written notice required by Paragraph 5.06.F. If Contractor or anyone for whom Contractor is responsible created the Hazardous Environmental Condition in question, then Owner may remove and remediate the Hazardous Environmental Condition, and impose a set-off against payments to account for the associated costs.

F. Contractor shall not resume Work in connection with such Hazardous Environmental Condition or in any affected area until after Owner has obtained any required permits related thereto, and delivered written notice to Contractor either (1) specifying that such condition

Copyright© 2018 National Society of Professional Engineers, American Council of Engineering Companies, and American Society of Civil Engineers. All rights reserved.

and any affected area is or has been rendered safe for the resumption of Work, or (2) specifying any special conditions under which such Work may be resumed safely.

G. If Owner and Contractor cannot agree as to entitlement to or on the amount or extent, if any, of any adjustment in Contract Price or Contract Times, as a result of such Work stoppage, such special conditions under which Work is agreed to be resumed by Contractor, or any costs or expenses incurred in response to the Hazardous Environmental Condition, then within 30 days of Owner's written notice regarding the resumption of Work, Contractor may submit a Change Proposal, or Owner may impose a set-off. Entitlement to any such adjustment is subject to the provisions of Paragraphs 4.05.D, 4.05.E, 11.07, and 11.08.

H. If, after receipt of such written notice, Contractor does not agree to resume such Work based on a reasonable belief it is unsafe, or does not agree to resume such Work under such special conditions, then Owner may order the portion of the Work that is in the area affected by such condition to be deleted from the Work, following the contractual change procedures in Article 11. Owner may have such deleted portion of the Work performed by Owner's own forces or others in accordance with Article 8.

I. To the fullest extent permitted by Laws and Regulations, Owner shall indemnify and hold harmless Contractor, Subcontractors, and Engineer, and the officers, directors, members, partners, employees, agents, consultants, and subcontractors of each and any of them, from and against all claims, costs, losses, and damages (including but not limited to all fees and charges of engineers, architects, attorneys, and other professionals, and all court, arbitration, or other dispute resolution costs) arising out of or relating to a Hazardous Environmental Condition, provided that such Hazardous Environmental Condition (1) was not shown or indicated in the Drawings, Specifications, or other Contract Documents, identified as Technical Data entitled to limited reliance pursuant to Paragraph 5.06.B, or identified in the Contract Documents to be included within the scope of the Work, and (2) was not created by Contractor or by anyone for whom Contractor is responsible. Nothing in this Paragraph 5.06.I obligates Owner to indemnify any individual or entity from and against the consequences of that individual's or entity's own negligence.

J. To the fullest extent permitted by Laws and Regulations, Contractor shall indemnify and hold harmless Owner and Engineer, and the officers, directors, members, partners, employees, agents, consultants, and subcontractors of each and any of them, from and against all claims, costs, losses, and damages (including but not limited to all fees and charges of engineers, architects, attorneys, and other professionals and all court or arbitration or other dispute resolution costs) arising out of or relating to the failure to control, contain, or remove a Constituent of Concern brought to the Site by Contractor or by anyone for whom Contractor is responsible, or to a Hazardous Environmental Condition created by Contractor or by anyone for whom Contractor is responsible. Nothing in this Paragraph 5.06.J obligates Contractor to indemnify any individual or entity from and against the consequences of that individual's or entity's own negligence.

K. The provisions of Paragraphs 5.03, 5.04, and 5.05 do not apply to the presence of Constituents of Concern or to a Hazardous Environmental Condition uncovered or revealed at the Site.

Copyright© 2018 National Society of Professional Engineers, American Council of Engineering Companies, and American Society of Civil Engineers. All rights reserved.

ARTICLE 6—BONDS AND INSURANCE

6.01 *Performance, Payment, and Other Bonds*

A. Contractor shall furnish a performance bond and a payment bond, each in an amount at least equal to the Contract Price, as security for the faithful performance and payment of Contractor's obligations under the Contract. These bonds must remain in effect until one year after the date when final payment becomes due or until completion of the correction period specified in Paragraph 15.08, whichever is later, except as provided otherwise by Laws or Regulations, the terms of a prescribed bond form, the Supplementary Conditions, or other provisions of the Contract.

B. Contractor shall also furnish such other bonds (if any) as are required by the Supplementary Conditions or other provisions of the Contract.

C. All bonds must be in the form included in the Bidding Documents or otherwise specified by Owner prior to execution of the Contract, except as provided otherwise by Laws or Regulations, and must be issued and signed by a surety named in "Companies Holding Certificates of Authority as Acceptable Sureties on Federal Bonds and as Acceptable Reinsuring Companies" as published in Department Circular 570 (as amended and supplemented) by the Bureau of the Fiscal Service, U.S. Department of the Treasury. A bond signed by an agent or attorney-in-fact must be accompanied by a certified copy of that individual's authority to bind the surety. The evidence of authority must show that it is effective on the date the agent or attorney-in-fact signed the accompanying bond.

D. Contractor shall obtain the required bonds from surety companies that are duly licensed or authorized, in the state or jurisdiction in which the Project is located, to issue bonds in the required amounts.

E. If the surety on a bond furnished by Contractor is declared bankrupt or becomes insolvent, or the surety ceases to meet the requirements above, then Contractor shall promptly notify Owner and Engineer in writing and shall, within 20 days after the event giving rise to such notification, provide another bond and surety, both of which must comply with the bond and surety requirements above.

F. If Contractor has failed to obtain a required bond, Owner may exclude the Contractor from the Site and exercise Owner's termination rights under Article 16.

G. Upon request to Owner from any Subcontractor, Supplier, or other person or entity claiming to have furnished labor, services, materials, or equipment used in the performance of the Work, Owner shall provide a copy of the payment bond to such person or entity.

H. Upon request to Contractor from any Subcontractor, Supplier, or other person or entity claiming to have furnished labor, services, materials, or equipment used in the performance of the Work, Contractor shall provide a copy of the payment bond to such person or entity.

6.02 *Insurance—General Provisions*

A. Owner and Contractor shall obtain and maintain insurance as required in this article and in the Supplementary Conditions.

B. All insurance required by the Contract to be purchased and maintained by Owner or Contractor shall be obtained from insurance companies that are duly licensed or authorized in the state or jurisdiction in which the Project is located to issue insurance policies for the

Copyright© 2018 National Society of Professional Engineers, American Council of Engineering Companies, and American Society of Civil Engineers. All rights reserved.

required limits and coverages. Unless a different standard is indicated in the Supplementary Conditions, all companies that provide insurance policies required under this Contract shall have an A.M. Best rating of A-VII or better.

C. Alternative forms of insurance coverage, including but not limited to self-insurance and "Occupational Accident and Excess Employer's Indemnity Policies," are not sufficient to meet the insurance requirements of this Contract, unless expressly allowed in the Supplementary Conditions.

D. Contractor shall deliver to Owner, with copies to each additional insured identified in the Contract, certificates of insurance and endorsements establishing that Contractor has obtained and is maintaining the policies and coverages required by the Contract. Upon request by Owner or any other insured, Contractor shall also furnish other evidence of such required insurance, including but not limited to copies of policies, documentation of applicable self-insured retentions (if allowed) and deductibles, full disclosure of all relevant exclusions, and evidence of insurance required to be purchased and maintained by Subcontractors or Suppliers. In any documentation furnished under this provision, Contractor, Subcontractors, and Suppliers may block out (redact) (1) any confidential premium or pricing information and (2) any wording specific to a project or jurisdiction other than those applicable to this Contract.

E. Owner shall deliver to Contractor, with copies to each additional insured identified in the Contract, certificates of insurance and endorsements establishing that Owner has obtained and is maintaining the policies and coverages required of Owner by the Contract (if any). Upon request by Contractor or any other insured, Owner shall also provide other evidence of such required insurance (if any), including but not limited to copies of policies, documentation of applicable self-insured retentions (if allowed) and deductibles, and full disclosure of all relevant exclusions. In any documentation furnished under this provision, Owner may block out (redact) (1) any confidential premium or pricing information and (2) any wording specific to a project or jurisdiction other than those relevant to this Contract.

F. Failure of Owner or Contractor to demand such certificates or other evidence of the other party's full compliance with these insurance requirements, or failure of Owner or Contractor to identify a deficiency in compliance from the evidence provided, will not be construed as a waiver of the other party's obligation to obtain and maintain such insurance.

G. In addition to the liability insurance required to be provided by Contractor, the Owner, at Owner's option, may purchase and maintain Owner's own liability insurance. Owner's liability policies, if any, operate separately and independently from policies required to be provided by Contractor, and Contractor cannot rely upon Owner's liability policies for any of Contractor's obligations to the Owner, Engineer, or third parties.

H. Contractor shall require:

1. Subcontractors to purchase and maintain worker's compensation, commercial general liability, and other insurance that is appropriate for their participation in the Project, and to name as additional insureds Owner and Engineer (and any other individuals or entities identified in the Supplementary Conditions as additional insureds on Contractor's liability policies) on each Subcontractor's commercial general liability insurance policy; and

2. Suppliers to purchase and maintain insurance that is appropriate for their participation in the Project.

Copyright© 2018 National Society of Professional Engineers, American Council of Engineering Companies, and American Society of Civil Engineers. All rights reserved.

I. If either party does not purchase or maintain the insurance required of such party by the Contract, such party shall notify the other party in writing of such failure to purchase prior to the start of the Work, or of such failure to maintain prior to any change in the required coverage.

J. If Contractor has failed to obtain and maintain required insurance, Contractor's entitlement to enter or remain at the Site will end immediately, and Owner may impose an appropriate set-off against payment for any associated costs (including but not limited to the cost of purchasing necessary insurance coverage), and exercise Owner's termination rights under Article 16.

K. Without prejudice to any other right or remedy, if a party has failed to obtain required insurance, the other party may elect (but is in no way obligated) to obtain equivalent insurance to protect such other party's interests at the expense of the party who was required to provide such coverage, and the Contract Price will be adjusted accordingly.

L. Owner does not represent that insurance coverage and limits established in this Contract necessarily will be adequate to protect Contractor or Contractor's interests. Contractor is responsible for determining whether such coverage and limits are adequate to protect its interests, and for obtaining and maintaining any additional insurance that Contractor deems necessary.

M. The insurance and insurance limits required herein will not be deemed as a limitation on Contractor's liability, or that of its Subcontractors or Suppliers, under the indemnities granted to Owner and other individuals and entities in the Contract or otherwise.

N. All the policies of insurance required to be purchased and maintained under this Contract will contain a provision or endorsement that the coverage afforded will not be canceled, or renewal refused, until at least 10 days prior written notice has been given to the purchasing policyholder. Within three days of receipt of any such written notice, the purchasing policyholder shall provide a copy of the notice to each other insured and Engineer.

6.03 *Contractor's Insurance*

A. *Required Insurance*: Contractor shall purchase and maintain Worker's Compensation, Commercial General Liability, and other insurance pursuant to the specific requirements of the Supplementary Conditions.

B. *General Provisions*: The policies of insurance required by this Paragraph 6.03 as supplemented must:

1. include at least the specific coverages required;

2. be written for not less than the limits provided, or those required by Laws or Regulations, whichever is greater;

3. remain in effect at least until the Work is complete (as set forth in Paragraph 15.06.D), and longer if expressly required elsewhere in this Contract, and at all times thereafter when Contractor may be correcting, removing, or replacing defective Work as a warranty or correction obligation, or otherwise, or returning to the Site to conduct other tasks arising from the Contract;

4. apply with respect to the performance of the Work, whether such performance is by Contractor, any Subcontractor or Supplier, or by anyone directly or indirectly employed

Copyright© 2018 National Society of Professional Engineers, American Council of Engineering Companies, and American Society of Civil Engineers. All rights reserved.

by any of them to perform any of the Work, or by anyone for whose acts any of them may be liable; and

5. include all necessary endorsements to support the stated requirements.

C. *Additional Insureds*: The Contractor's commercial general liability, automobile liability, employer's liability, umbrella or excess, pollution liability, and unmanned aerial vehicle liability policies, if required by this Contract, must:

1. include and list as additional insureds Owner and Engineer, and any individuals or entities identified as additional insureds in the Supplementary Conditions;

2. include coverage for the respective officers, directors, members, partners, employees, and consultants of all such additional insureds;

3. afford primary coverage to these additional insureds for all claims covered thereby (including as applicable those arising from both ongoing and completed operations);

4. not seek contribution from insurance maintained by the additional insured; and

5. as to commercial general liability insurance, apply to additional insureds with respect to liability caused in whole or in part by Contractor's acts or omissions, or the acts and omissions of those working on Contractor's behalf, in the performance of Contractor's operations.

6.04 *Builder's Risk and Other Property Insurance*

A. *Builder's Risk*: Unless otherwise provided in the Supplementary Conditions, Contractor shall purchase and maintain builder's risk insurance upon the Work on a completed value basis, in the amount of the Work's full insurable replacement cost (subject to such deductible amounts as may be provided in the Supplementary Conditions or required by Laws and Regulations). The specific requirements applicable to the builder's risk insurance are set forth in the Supplementary Conditions.

B. *Property Insurance for Facilities of Owner Where Work Will Occur*: Owner is responsible for obtaining and maintaining property insurance covering each existing structure, building, or facility in which any part of the Work will occur, or to which any part of the Work will attach or be adjoined. Such property insurance will be written on a special perils (all-risk) form, on a replacement cost basis, providing coverage consistent with that required for the builder's risk insurance, and will be maintained until the Work is complete, as set forth in Paragraph 15.06.D.

C. *Property Insurance for Substantially Complete Facilities*: Promptly after Substantial Completion, and before actual occupancy or use of the substantially completed Work, Owner will obtain property insurance for such substantially completed Work, and maintain such property insurance at least until the Work is complete, as set forth in Paragraph 15.06.D. Such property insurance will be written on a special perils (all-risk) form, on a replacement cost basis, and provide coverage consistent with that required for the builder's risk insurance. The builder's risk insurance may terminate upon written confirmation of Owner's procurement of such property insurance.

D. *Partial Occupancy or Use by Owner*: If Owner will occupy or use a portion or portions of the Work prior to Substantial Completion of all the Work, as provided in Paragraph 15.04, then Owner (directly, if it is the purchaser of the builder's risk policy, or through Contractor) will

Copyright© 2018 National Society of Professional Engineers, American Council of Engineering Companies, and American Society of Civil Engineers. All rights reserved.

provide advance notice of such occupancy or use to the builder's risk insurer, and obtain an endorsement consenting to the continuation of coverage prior to commencing such partial occupancy or use.

E. *Insurance of Other Property; Additional Insurance*: If the express insurance provisions of the Contract do not require or address the insurance of a property item or interest, then the entity or individual owning such property item will be responsible for insuring it. If Contractor elects to obtain other special insurance to be included in or supplement the builder's risk or property insurance policies provided under this Paragraph 6.04, it may do so at Contractor's expense.

6.05 *Property Losses; Subrogation*

A. The builder's risk insurance policy purchased and maintained in accordance with Paragraph 6.04 (or an installation floater policy if authorized by the Supplementary Conditions), will contain provisions to the effect that in the event of payment of any loss or damage the insurer will have no rights of recovery against any insureds thereunder, or against Engineer or its consultants, or their officers, directors, members, partners, employees, agents, consultants, or subcontractors.

1. Owner and Contractor waive all rights against each other and the respective officers, directors, members, partners, employees, agents, consultants, and subcontractors of each and any of them, for all losses and damages caused by, arising out of, or resulting from any of the perils, risks, or causes of loss covered by such policies and any other property insurance applicable to the Work; and, in addition, waive all such rights against Engineer, its consultants, all individuals or entities identified in the Supplementary Conditions as builder's risk or installation floater insureds, and the officers, directors, members, partners, employees, agents, consultants, and subcontractors of each and any of them, under such policies for losses and damages so caused.

2. None of the above waivers extends to the rights that any party making such waiver may have to the proceeds of insurance held by Owner or Contractor as trustee or fiduciary, or otherwise payable under any policy so issued.

B. Any property insurance policy maintained by Owner covering any loss, damage, or consequential loss to Owner's existing structures, buildings, or facilities in which any part of the Work will occur, or to which any part of the Work will attach or adjoin; to adjacent structures, buildings, or facilities of Owner; or to part or all of the completed or substantially completed Work, during partial occupancy or use pursuant to Paragraph 15.04, after Substantial Completion pursuant to Paragraph 15.03, or after final payment pursuant to Paragraph 15.06, will contain provisions to the effect that in the event of payment of any loss or damage the insurer will have no rights of recovery against any insureds thereunder, or against Contractor, Subcontractors, or Engineer, or the officers, directors, members, partners, employees, agents, consultants, or subcontractors of each and any of them, and that the insured is allowed to waive the insurer's rights of subrogation in a written contract executed prior to the loss, damage, or consequential loss.

1. Owner waives all rights against Contractor, Subcontractors, and Engineer, and the officers, directors, members, partners, employees, agents, consultants and subcontractors of each and any of them, for all losses and damages caused by, arising out of, or resulting from fire or any of the perils, risks, or causes of loss covered by such policies.

Copyright© 2018 National Society of Professional Engineers, American Council of Engineering Companies, and American Society of Civil Engineers. All rights reserved.

C. The waivers in this Paragraph 6.05 include the waiver of rights due to business interruption, loss of use, or other consequential loss extending beyond direct physical loss or damage to Owner's property or the Work caused by, arising out of, or resulting from fire or other insured peril, risk, or cause of loss.

D. Contractor shall be responsible for assuring that each Subcontract contains provisions whereby the Subcontractor waives all rights against Owner, Contractor, all individuals or entities identified in the Supplementary Conditions as insureds, the Engineer and its consultants, and the officers, directors, members, partners, employees, agents, consultants, and subcontractors of each and any of them, for all losses and damages caused by, arising out of, relating to, or resulting from fire or other peril, risk, or cause of loss covered by builder's risk insurance, installation floater, and any other property insurance applicable to the Work.

6.06 *Receipt and Application of Property Insurance Proceeds*

A. Any insured loss under the builder's risk and other policies of property insurance required by Paragraph 6.04 will be adjusted and settled with the named insured that purchased the policy. Such named insured shall act as fiduciary for the other insureds, and give notice to such other insureds that adjustment and settlement of a claim is in progress. Any other insured may state its position regarding a claim for insured loss in writing within 15 days after notice of such claim.

B. Proceeds for such insured losses may be made payable by the insurer either jointly to multiple insureds, or to the named insured that purchased the policy in its own right and as fiduciary for other insureds, subject to the requirements of any applicable mortgage clause. A named insured receiving insurance proceeds under the builder's risk and other policies of insurance required by Paragraph 6.04 shall maintain such proceeds in a segregated account, and distribute such proceeds in accordance with such agreement as the parties in interest may reach, or as otherwise required under the dispute resolution provisions of this Contract or applicable Laws and Regulations.

C. If no other special agreement is reached, Contractor shall repair or replace the damaged Work, using allocated insurance proceeds.

ARTICLE 7—CONTRACTOR'S RESPONSIBILITIES

7.01 *Contractor's Means and Methods of Construction*

A. Contractor shall be solely responsible for the means, methods, techniques, sequences, and procedures of construction.

B. If the Contract Documents note, or Contractor determines, that professional engineering or other design services are needed to carry out Contractor's responsibilities for construction means, methods, techniques, sequences, and procedures, or for Site safety, then Contractor shall cause such services to be provided by a properly licensed design professional, at Contractor's expense. Such services are not Owner-delegated professional design services under this Contract, and neither Owner nor Engineer has any responsibility with respect to (1) Contractor's determination of the need for such services, (2) the qualifications or licensing of the design professionals retained or employed by Contractor, (3) the performance of such services, or (4) any errors, omissions, or defects in such services.

Copyright© 2018 National Society of Professional Engineers, American Council of Engineering Companies, and American Society of Civil Engineers. All rights reserved.

7.02 *Supervision and Superintendence*

A. Contractor shall supervise, inspect, and direct the Work competently and efficiently, devoting such attention thereto and applying such skills and expertise as may be necessary to perform the Work in accordance with the Contract Documents.

B. At all times during the progress of the Work, Contractor shall assign a competent resident superintendent who will not be replaced without written notice to Owner and Engineer except under extraordinary circumstances.

7.03 *Labor; Working Hours*

A. Contractor shall provide competent, suitably qualified personnel to survey and lay out the Work and perform construction as required by the Contract Documents. Contractor shall maintain good discipline and order at the Site.

B. Contractor shall be fully responsible to Owner and Engineer for all acts and omissions of Contractor's employees; of Suppliers and Subcontractors, and their employees; and of any other individuals or entities performing or furnishing any of the Work, just as Contractor is responsible for Contractor's own acts and omissions.

C. Except as otherwise required for the safety or protection of persons or the Work or property at the Site or adjacent thereto, and except as otherwise stated in the Contract Documents, all Work at the Site will be performed during regular working hours, Monday through Friday. Contractor will not perform Work on a Saturday, Sunday, or any legal holiday. Contractor may perform Work outside regular working hours or on Saturdays, Sundays, or legal holidays only with Owner's written consent, which will not be unreasonably withheld.

7.04 *Services, Materials, and Equipment*

A. Unless otherwise specified in the Contract Documents, Contractor shall provide and assume full responsibility for all services, materials, equipment, labor, transportation, construction equipment and machinery, tools, appliances, fuel, power, light, heat, telephone, water, sanitary facilities, temporary facilities, and all other facilities and incidentals necessary for the performance, testing, start up, and completion of the Work, whether or not such items are specifically called for in the Contract Documents.

B. All materials and equipment incorporated into the Work must be new and of good quality, except as otherwise provided in the Contract Documents. All special warranties and guarantees required by the Specifications will expressly run to the benefit of Owner. If required by Engineer, Contractor shall furnish satisfactory evidence (including reports of required tests) as to the source, kind, and quality of materials and equipment.

C. All materials and equipment must be stored, applied, installed, connected, erected, protected, used, cleaned, and conditioned in accordance with instructions of the applicable Supplier, except as otherwise may be provided in the Contract Documents.

7.05 *"Or Equals"*

A. *Contractor's Request; Governing Criteria*: Whenever an item of equipment or material is specified or described in the Contract Documents by using the names of one or more proprietary items or specific Suppliers, the Contract Price has been based upon Contractor furnishing such item as specified. The specification or description of such an item is intended to establish the type, function, appearance, and quality required. Unless the specification or

Copyright© 2018 National Society of Professional Engineers, American Council of Engineering Companies, and American Society of Civil Engineers. All rights reserved.

description contains or is followed by words reading that no like, equivalent, or "or equal" item is permitted, Contractor may request that Engineer authorize the use of other items of equipment or material, or items from other proposed Suppliers, under the circumstances described below.

1. If Engineer in its sole discretion determines that an item of equipment or material proposed by Contractor is functionally equal to that named and sufficiently similar so that no change in related Work will be required, Engineer will deem it an "or equal" item. For the purposes of this paragraph, a proposed item of equipment or material will be considered functionally equal to an item so named if:
    a. in the exercise of reasonable judgment Engineer determines that the proposed item:
        1) is at least equal in materials of construction, quality, durability, appearance, strength, and design characteristics;
        2) will reliably perform at least equally well the function and achieve the results imposed by the design concept of the completed Project as a functioning whole;
        3) has a proven record of performance and availability of responsive service; and
        4) is not objectionable to Owner.
    b. Contractor certifies that, if the proposed item is approved and incorporated into the Work:
        1) there will be no increase in cost to the Owner or increase in Contract Times; and
        2) the item will conform substantially to the detailed requirements of the item named in the Contract Documents.

B. *Contractor's Expense*: Contractor shall provide all data in support of any proposed "or equal" item at Contractor's expense.

C. *Engineer's Evaluation and Determination*: Engineer will be allowed a reasonable time to evaluate each "or-equal" request. Engineer may require Contractor to furnish additional data about the proposed "or-equal" item. Engineer will be the sole judge of acceptability. No "or-equal" item will be ordered, furnished, installed, or utilized until Engineer's review is complete and Engineer determines that the proposed item is an "or-equal," which will be evidenced by an approved Shop Drawing or other written communication. Engineer will advise Contractor in writing of any negative determination.

D. *Effect of Engineer's Determination*: Neither approval nor denial of an "or-equal" request will result in any change in Contract Price. The Engineer's denial of an "or-equal" request will be final and binding, and may not be reversed through an appeal under any provision of the Contract.

E. *Treatment as a Substitution Request*: If Engineer determines that an item of equipment or material proposed by Contractor does not qualify as an "or-equal" item, Contractor may request that Engineer consider the item a proposed substitute pursuant to Paragraph 7.06.

7.06 *Substitutes*

A. *Contractor's Request; Governing Criteria*: Unless the specification or description of an item of equipment or material required to be furnished under the Contract Documents contains or is followed by words reading that no substitution is permitted, Contractor may request that

Copyright© 2018 National Society of Professional Engineers, American Council of Engineering Companies, and American Society of Civil Engineers. All rights reserved.

Engineer authorize the use of other items of equipment or material under the circumstances described below. To the extent possible such requests must be made before commencement of related construction at the Site.

1. Contractor shall submit sufficient information as provided below to allow Engineer to determine if the item of material or equipment proposed is functionally equivalent to that named and an acceptable substitute therefor. Engineer will not accept requests for review of proposed substitute items of equipment or material from anyone other than Contractor.
2. The requirements for review by Engineer will be as set forth in Paragraph 7.06.B, as supplemented by the Specifications, and as Engineer may decide is appropriate under the circumstances.
3. Contractor shall make written application to Engineer for review of a proposed substitute item of equipment or material that Contractor seeks to furnish or use. The application:
    a. will certify that the proposed substitute item will:
        1) perform adequately the functions and achieve the results called for by the general design;
        2) be similar in substance to the item specified; and
        3) be suited to the same use as the item specified.
    b. will state:
        1) the extent, if any, to which the use of the proposed substitute item will necessitate a change in Contract Times;
        2) whether use of the proposed substitute item in the Work will require a change in any of the Contract Documents (or in the provisions of any other direct contract with Owner for other work on the Project) to adapt the design to the proposed substitute item; and
        3) whether incorporation or use of the proposed substitute item in connection with the Work is subject to payment of any license fee or royalty.
    c. will identify:
        1) all variations of the proposed substitute item from the item specified; and
        2) available engineering, sales, maintenance, repair, and replacement services.
    d. will contain an itemized estimate of all costs or credits that will result directly or indirectly from use of such substitute item, including but not limited to changes in Contract Price, shared savings, costs of redesign, and claims of other contractors affected by any resulting change.

B. *Engineer's Evaluation and Determination*: Engineer will be allowed a reasonable time to evaluate each substitute request, and to obtain comments and direction from Owner. Engineer may require Contractor to furnish additional data about the proposed substitute item. Engineer will be the sole judge of acceptability. No substitute will be ordered, furnished, installed, or utilized until Engineer's review is complete and Engineer determines that the proposed item is an acceptable substitute. Engineer's determination will be evidenced by a

Copyright© 2018 National Society of Professional Engineers, American Council of Engineering Companies, and American Society of Civil Engineers. All rights reserved.

Field Order or a proposed Change Order accounting for the substitution itself and all related impacts, including changes in Contract Price or Contract Times. Engineer will advise Contractor in writing of any negative determination.

C. *Special Guarantee*: Owner may require Contractor to furnish at Contractor's expense a special performance guarantee or other surety with respect to any substitute.

D. *Reimbursement of Engineer's Cost*: Engineer will record Engineer's costs in evaluating a substitute proposed or submitted by Contractor. Whether or not Engineer approves a substitute so proposed or submitted by Contractor, Contractor shall reimburse Owner for the reasonable charges of Engineer for evaluating each such proposed substitute. Contractor shall also reimburse Owner for the reasonable charges of Engineer for making changes in the Contract Documents (or in the provisions of any other direct contract with Owner) resulting from the acceptance of each proposed substitute.

E. *Contractor's Expense*: Contractor shall provide all data in support of any proposed substitute at Contractor's expense.

F. *Effect of Engineer's Determination*: If Engineer approves the substitution request, Contractor shall execute the proposed Change Order and proceed with the substitution. The Engineer's denial of a substitution request will be final and binding, and may not be reversed through an appeal under any provision of the Contract. Contractor may challenge the scope of reimbursement costs imposed under Paragraph 7.06.D, by timely submittal of a Change Proposal.

7.07 *Concerning Subcontractors and Suppliers*

A. Contractor may retain Subcontractors and Suppliers for the performance of parts of the Work. Such Subcontractors and Suppliers must be acceptable to Owner. The Contractor's retention of a Subcontractor or Supplier for the performance of parts of the Work will not relieve Contractor's obligation to Owner to perform and complete the Work in accordance with the Contract Documents.

B. Contractor shall retain specific Subcontractors and Suppliers for the performance of designated parts of the Work if required by the Contract to do so.

C. Subsequent to the submittal of Contractor's Bid or final negotiation of the terms of the Contract, Owner may not require Contractor to retain any Subcontractor or Supplier to furnish or perform any of the Work against which Contractor has reasonable objection.

D. Prior to entry into any binding subcontract or purchase order, Contractor shall submit to Owner the identity of the proposed Subcontractor or Supplier (unless Owner has already deemed such proposed Subcontractor or Supplier acceptable during the bidding process or otherwise). Such proposed Subcontractor or Supplier shall be deemed acceptable to Owner unless Owner raises a substantive, reasonable objection within 5 days.

E. Owner may require the replacement of any Subcontractor or Supplier. Owner also may require Contractor to retain specific replacements; provided, however, that Owner may not require a replacement to which Contractor has a reasonable objection. If Contractor has submitted the identity of certain Subcontractors or Suppliers for acceptance by Owner, and Owner has accepted it (either in writing or by failing to make written objection thereto), then Owner may subsequently revoke the acceptance of any such Subcontractor or Supplier so identified solely on the basis of substantive, reasonable objection after due investigation.

Copyright© 2018 National Society of Professional Engineers, American Council of Engineering Companies, and American Society of Civil Engineers. All rights reserved.

Contractor shall submit an acceptable replacement for the rejected Subcontractor or Supplier.

F. If Owner requires the replacement of any Subcontractor or Supplier retained by Contractor to perform any part of the Work, then Contractor shall be entitled to an adjustment in Contract Price or Contract Times, with respect to the replacement; and Contractor shall initiate a Change Proposal for such adjustment within 30 days of Owner's requirement of replacement.

G. No acceptance by Owner of any such Subcontractor or Supplier, whether initially or as a replacement, will constitute a waiver of the right of Owner to the completion of the Work in accordance with the Contract Documents.

H. On a monthly basis, Contractor shall submit to Engineer a complete list of all Subcontractors and Suppliers having a direct contract with Contractor, and of all other Subcontractors and Suppliers known to Contractor at the time of submittal.

I. Contractor shall be solely responsible for scheduling and coordinating the work of Subcontractors and Suppliers.

J. The divisions and sections of the Specifications and the identifications of any Drawings do not control Contractor in dividing the Work among Subcontractors or Suppliers, or in delineating the Work to be performed by any specific trade.

K. All Work performed for Contractor by a Subcontractor or Supplier must be pursuant to an appropriate contractual agreement that specifically binds the Subcontractor or Supplier to the applicable terms and conditions of the Contract for the benefit of Owner and Engineer.

L. Owner may furnish to any Subcontractor or Supplier, to the extent practicable, information about amounts paid to Contractor for Work performed for Contractor by the Subcontractor or Supplier.

M. Contractor shall restrict all Subcontractors and Suppliers from communicating with Engineer or Owner, except through Contractor or in case of an emergency, or as otherwise expressly allowed in this Contract.

7.08 *Patent Fees and Royalties*

A. Contractor shall pay all license fees and royalties and assume all costs incident to the use in the performance of the Work or the incorporation in the Work of any invention, design, process, product, or device which is the subject of patent rights or copyrights held by others. If an invention, design, process, product, or device is specified in the Contract Documents for use in the performance of the Work and if, to the actual knowledge of Owner or Engineer, its use is subject to patent rights or copyrights calling for the payment of any license fee or royalty to others, the existence of such rights will be disclosed in the Contract Documents.

B. To the fullest extent permitted by Laws and Regulations, Owner shall indemnify and hold harmless Contractor, and its officers, directors, members, partners, employees, agents, consultants, and subcontractors, from and against all claims, costs, losses, and damages (including but not limited to all fees and charges of engineers, architects, attorneys, and other professionals, and all court or arbitration or other dispute resolution costs) arising out of or relating to any infringement of patent rights or copyrights incident to the use in the performance of the Work or resulting from the incorporation in the Work of any invention, design, process, product, or device specified in the Contract Documents, but not identified as

Copyright© 2018 National Society of Professional Engineers, American Council of Engineering Companies, and American Society of Civil Engineers. All rights reserved.

being subject to payment of any license fee or royalty to others required by patent rights or copyrights.

C. To the fullest extent permitted by Laws and Regulations, Contractor shall indemnify and hold harmless Owner and Engineer, and the officers, directors, members, partners, employees, agents, consultants and subcontractors of each and any of them, from and against all claims, costs, losses, and damages (including but not limited to all fees and charges of engineers, architects, attorneys, and other professionals and all court or arbitration or other dispute resolution costs) arising out of or relating to any infringement of patent rights or copyrights incident to the use in the performance of the Work or resulting from the incorporation in the Work of any invention, design, process, product, or device not specified in the Contract Documents.

7.09 *Permits*

A. Unless otherwise provided in the Contract Documents, Contractor shall obtain and pay for all construction permits, licenses, and certificates of occupancy. Owner shall assist Contractor, when necessary, in obtaining such permits and licenses. Contractor shall pay all governmental charges and inspection fees necessary for the prosecution of the Work which are applicable at the time of the submission of Contractor's Bid (or when Contractor became bound under a negotiated contract). Owner shall pay all charges of utility owners for connections for providing permanent service to the Work.

7.10 *Taxes*

A. Contractor shall pay all sales, consumer, use, and other similar taxes required to be paid by Contractor in accordance with the Laws and Regulations of the place of the Project which are applicable during the performance of the Work.

7.11 *Laws and Regulations*

A. Contractor shall give all notices required by and shall comply with all Laws and Regulations applicable to the performance of the Work. Neither Owner nor Engineer shall be responsible for monitoring Contractor's compliance with any Laws or Regulations.

B. If Contractor performs any Work or takes any other action knowing or having reason to know that it is contrary to Laws or Regulations, Contractor shall bear all resulting costs and losses, and shall indemnify and hold harmless Owner and Engineer, and the officers, directors, members, partners, employees, agents, consultants, and subcontractors of each and any of them, from and against all claims, costs, losses, and damages (including but not limited to all fees and charges of engineers, architects, attorneys, and other professionals and all court or arbitration or other dispute resolution costs) arising out of or relating to such Work or other action. It is not Contractor's responsibility to make certain that the Work described in the Contract Documents is in accordance with Laws and Regulations, but this does not relieve Contractor of its obligations under Paragraph 3.03.

C. Owner or Contractor may give written notice to the other party of any changes after the submission of Contractor's Bid (or after the date when Contractor became bound under a negotiated contract) in Laws or Regulations having an effect on the cost or time of performance of the Work, including but not limited to changes in Laws or Regulations having an effect on procuring permits and on sales, use, value-added, consumption, and other similar taxes. If Owner and Contractor are unable to agree on entitlement to or on the amount or extent, if any, of any adjustment in Contract Price or Contract Times resulting from such

Copyright© 2018 National Society of Professional Engineers, American Council of Engineering Companies, and American Society of Civil Engineers. All rights reserved.

changes, then within 30 days of such written notice Contractor may submit a Change Proposal, or Owner may initiate a Claim.

7.12 *Record Documents*

A. Contractor shall maintain in a safe place at the Site one printed record copy of all Drawings, Specifications, Addenda, Change Orders, Work Change Directives, Field Orders, written interpretations and clarifications, and approved Shop Drawings. Contractor shall keep such record documents in good order and annotate them to show changes made during construction. These record documents, together with all approved Samples, will be available to Engineer for reference. Upon completion of the Work, Contractor shall deliver these record documents to Engineer.

7.13 *Safety and Protection*

A. Contractor shall be solely responsible for initiating, maintaining, and supervising all safety precautions and programs in connection with the Work. Such responsibility does not relieve Subcontractors of their responsibility for the safety of persons or property in the performance of their work, nor for compliance with applicable safety Laws and Regulations.

B. Contractor shall designate a qualified and experienced safety representative whose duties and responsibilities are the prevention of Work-related accidents and the maintenance and supervision of safety precautions and programs.

C. Contractor shall take all necessary precautions for the safety of, and shall provide the necessary protection to prevent damage, injury, or loss to:

1. all persons on the Site or who may be affected by the Work;

2. all the Work and materials and equipment to be incorporated therein, whether in storage on or off the Site; and

3. other property at the Site or adjacent thereto, including trees, shrubs, lawns, walks, pavements, roadways, structures, other work in progress, utilities, and Underground Facilities not designated for removal, relocation, or replacement in the course of construction.

D. All damage, injury, or loss to any property referred to in Paragraph 7.13.C.2 or 7.13.C.3 caused, directly or indirectly, in whole or in part, by Contractor, any Subcontractor, Supplier, or any other individual or entity directly or indirectly employed by any of them to perform any of the Work, or anyone for whose acts any of them may be liable, shall be remedied by Contractor at its expense (except damage or loss attributable to the fault of Drawings or Specifications or to the acts or omissions of Owner or Engineer or anyone employed by any of them, or anyone for whose acts any of them may be liable, and not attributable, directly or indirectly, in whole or in part, to the fault or negligence of Contractor or any Subcontractor, Supplier, or other individual or entity directly or indirectly employed by any of them).

E. Contractor shall comply with all applicable Laws and Regulations relating to the safety of persons or property, or to the protection of persons or property from damage, injury, or loss; and shall erect and maintain all necessary safeguards for such safety and protection.

F. Contractor shall notify Owner; the owners of adjacent property; the owners of Underground Facilities and other utilities (if the identity of such owners is known to Contractor); and other contractors and utility owners performing work at or adjacent to the Site, in writing, when

Copyright© 2018 National Society of Professional Engineers, American Council of Engineering Companies, and American Society of Civil Engineers. All rights reserved.

Contractor knows that prosecution of the Work may affect them, and shall cooperate with them in the protection, removal, relocation, and replacement of their property or work in progress.

G. Contractor shall comply with the applicable requirements of Owner's safety programs, if any. Any Owner's safety programs that are applicable to the Work are identified or included in the Supplementary Conditions or Specifications.

H. Contractor shall inform Owner and Engineer of the specific requirements of Contractor's safety program with which Owner's and Engineer's employees and representatives must comply while at the Site.

I. Contractor's duties and responsibilities for safety and protection will continue until all the Work is completed, Engineer has issued a written notice to Owner and Contractor in accordance with Paragraph 15.06.C that the Work is acceptable, and Contractor has left the Site (except as otherwise expressly provided in connection with Substantial Completion).

J. Contractor's duties and responsibilities for safety and protection will resume whenever Contractor or any Subcontractor or Supplier returns to the Site to fulfill warranty or correction obligations, or to conduct other tasks arising from the Contract Documents.

7.14 *Hazard Communication Programs*

A. Contractor shall be responsible for coordinating any exchange of safety data sheets (formerly known as material safety data sheets) or other hazard communication information required to be made available to or exchanged between or among employers at the Site in accordance with Laws or Regulations.

7.15 *Emergencies*

A. In emergencies affecting the safety or protection of persons or the Work or property at the Site or adjacent thereto, Contractor is obligated to act to prevent damage, injury, or loss. Contractor shall give Engineer prompt written notice if Contractor believes that any significant changes in the Work or variations from the Contract Documents have been caused by an emergency, or are required as a result of Contractor's response to an emergency. If Engineer determines that a change in the Contract Documents is required because of an emergency or Contractor's response, a Work Change Directive or Change Order will be issued.

7.16 *Submittals*

A. *Shop Drawing and Sample Requirements*

1. Before submitting a Shop Drawing or Sample, Contractor shall:

a. review and coordinate the Shop Drawing or Sample with other Shop Drawings and Samples and with the requirements of the Work and the Contract Documents;

b. determine and verify:

1) all field measurements, quantities, dimensions, specified performance and design criteria, installation requirements, materials, catalog numbers, and similar information with respect to the Submittal;

2) the suitability of all materials and equipment offered with respect to the indicated application, fabrication, shipping, handling, storage, assembly, and installation pertaining to the performance of the Work; and

Copyright© 2018 National Society of Professional Engineers, American Council of Engineering Companies, and American Society of Civil Engineers. All rights reserved.

3) all information relative to Contractor's responsibilities for means, methods, techniques, sequences, and procedures of construction, and safety precautions and programs incident thereto;

c. confirm that the Submittal is complete with respect to all related data included in the Submittal.

2. Each Shop Drawing or Sample must bear a stamp or specific written certification that Contractor has satisfied Contractor's obligations under the Contract Documents with respect to Contractor's review of that Submittal, and that Contractor approves the Submittal.

3. With each Shop Drawing or Sample, Contractor shall give Engineer specific written notice of any variations that the Submittal may have from the requirements of the Contract Documents. This notice must be set forth in a written communication separate from the Submittal; and, in addition, in the case of a Shop Drawing by a specific notation made on the Shop Drawing itself.

B. *Submittal Procedures for Shop Drawings and Samples*: Contractor shall label and submit Shop Drawings and Samples to Engineer for review and approval in accordance with the accepted Schedule of Submittals.

1. *Shop Drawings*

a. Contractor shall submit the number of copies required in the Specifications.

b. Data shown on the Shop Drawings must be complete with respect to quantities, dimensions, specified performance and design criteria, materials, and similar data to show Engineer the services, materials, and equipment Contractor proposes to provide, and to enable Engineer to review the information for the limited purposes required by Paragraph 7.16.C.

2. *Samples*

a. Contractor shall submit the number of Samples required in the Specifications.

b. Contractor shall clearly identify each Sample as to material, Supplier, pertinent data such as catalog numbers, the use for which intended and other data as Engineer may require to enable Engineer to review the Submittal for the limited purposes required by Paragraph 7.16.C.

3. Where a Shop Drawing or Sample is required by the Contract Documents or the Schedule of Submittals, any related Work performed prior to Engineer's review and approval of the pertinent submittal will be at the sole expense and responsibility of Contractor.

C. *Engineer's Review of Shop Drawings and Samples*

1. Engineer will provide timely review of Shop Drawings and Samples in accordance with the accepted Schedule of Submittals. Engineer's review and approval will be only to determine if the items covered by the Submittals will, after installation or incorporation in the Work, comply with the requirements of the Contract Documents, and be compatible with the design concept of the completed Project as a functioning whole as indicated by the Contract Documents.

Copyright© 2018 National Society of Professional Engineers, American Council of Engineering Companies, and American Society of Civil Engineers. All rights reserved.

2. Engineer's review and approval will not extend to means, methods, techniques, sequences, or procedures of construction, or to safety precautions or programs incident thereto.

3. Engineer's review and approval of a separate item as such will not indicate approval of the assembly in which the item functions.

4. Engineer's review and approval of a Shop Drawing or Sample will not relieve Contractor from responsibility for any variation from the requirements of the Contract Documents unless Contractor has complied with the requirements of Paragraph 7.16.A.3 and Engineer has given written approval of each such variation by specific written notation thereof incorporated in or accompanying the Shop Drawing or Sample. Engineer will document any such approved variation from the requirements of the Contract Documents in a Field Order or other appropriate Contract modification.

5. Engineer's review and approval of a Shop Drawing or Sample will not relieve Contractor from responsibility for complying with the requirements of Paragraphs 7.16.A and B.

6. Engineer's review and approval of a Shop Drawing or Sample, or of a variation from the requirements of the Contract Documents, will not, under any circumstances, change the Contract Times or Contract Price, unless such changes are included in a Change Order.

7. Neither Engineer's receipt, review, acceptance, or approval of a Shop Drawing or Sample will result in such item becoming a Contract Document.

8. Contractor shall perform the Work in compliance with the requirements and commitments set forth in approved Shop Drawings and Samples, subject to the provisions of Paragraph 7.16.C.4.

D. *Resubmittal Procedures for Shop Drawings and Samples*

1. Contractor shall make corrections required by Engineer and shall return the required number of corrected copies of Shop Drawings and submit, as required, new Samples for review and approval. Contractor shall direct specific attention in writing to revisions other than the corrections called for by Engineer on previous Submittals.

2. Contractor shall furnish required Shop Drawing and Sample submittals with sufficient information and accuracy to obtain required approval of an item with no more than two resubmittals. Engineer will record Engineer's time for reviewing a third or subsequent resubmittal of a Shop Drawing or Sample, and Contractor shall be responsible for Engineer's charges to Owner for such time. Owner may impose a set-off against payments due Contractor to secure reimbursement for such charges.

3. If Contractor requests a change of a previously approved Shop Drawing or Sample, Contractor shall be responsible for Engineer's charges to Owner for its review time, and Owner may impose a set-off against payments due Contractor to secure reimbursement for such charges, unless the need for such change is beyond the control of Contractor.

Copyright© 2018 National Society of Professional Engineers, American Council of Engineering Companies, and American Society of Civil Engineers. All rights reserved.

E. *Submittals Other than Shop Drawings, Samples, and Owner-Delegated Designs*

1. The following provisions apply to all Submittals other than Shop Drawings, Samples, and Owner-delegated designs:

a. Contractor shall submit all such Submittals to the Engineer in accordance with the Schedule of Submittals and pursuant to the applicable terms of the Contract Documents.

b. Engineer will provide timely review of all such Submittals in accordance with the Schedule of Submittals and return such Submittals with a notation of either Accepted or Not Accepted. Any such Submittal that is not returned within the time established in the Schedule of Submittals will be deemed accepted.

c. Engineer's review will be only to determine if the Submittal is acceptable under the requirements of the Contract Documents as to general form and content of the Submittal.

d. If any such Submittal is not accepted, Contractor shall confer with Engineer regarding the reason for the non-acceptance, and resubmit an acceptable document.

2. Procedures for the submittal and acceptance of the Progress Schedule, the Schedule of Submittals, and the Schedule of Values are set forth in Paragraphs 2.03. 2.04, and 2.05.

F. Owner-delegated Designs: Submittals pursuant to Owner-delegated designs are governed by the provisions of Paragraph 7.19.

7.17 *Contractor's General Warranty and Guarantee*

A. Contractor warrants and guarantees to Owner that all Work will be in accordance with the Contract Documents and will not be defective. Engineer is entitled to rely on Contractor's warranty and guarantee.

B. Owner's rights under this warranty and guarantee are in addition to, and are not limited by, Owner's rights under the correction period provisions of Paragraph 15.08. The time in which Owner may enforce its warranty and guarantee rights under this Paragraph 7.17 is limited only by applicable Laws and Regulations restricting actions to enforce such rights; provided, however, that after the end of the correction period under Paragraph 15.08:

1. Owner shall give Contractor written notice of any defective Work within 60 days of the discovery that such Work is defective; and

2. Such notice will be deemed the start of an event giving rise to a Claim under Paragraph 12.01.B, such that any related Claim must be brought within 30 days of the notice.

C. Contractor's warranty and guarantee hereunder excludes defects or damage caused by:

1. abuse, or improper modification, maintenance, or operation, by persons other than Contractor, Subcontractors, Suppliers, or any other individual or entity for whom Contractor is responsible; or

2. normal wear and tear under normal usage.

D. Contractor's obligation to perform and complete the Work in accordance with the Contract Documents is absolute. None of the following will constitute an acceptance of Work that is

Copyright© 2018 National Society of Professional Engineers, American Council of Engineering Companies, and American Society of Civil Engineers. All rights reserved.

not in accordance with the Contract Documents, a release of Contractor's obligation to perform the Work in accordance with the Contract Documents, or a release of Owner's warranty and guarantee rights under this Paragraph 7.17:

1. Observations by Engineer;
2. Recommendation by Engineer or payment by Owner of any progress or final payment;
3. The issuance of a certificate of Substantial Completion by Engineer or any payment related thereto by Owner;
4. Use or occupancy of the Work or any part thereof by Owner;
5. Any review and approval of a Shop Drawing or Sample submittal;
6. The issuance of a notice of acceptability by Engineer;
7. The end of the correction period established in Paragraph 15.08;
8. Any inspection, test, or approval by others; or
9. Any correction of defective Work by Owner.

E. If the Contract requires the Contractor to accept the assignment of a contract entered into by Owner, then the specific warranties, guarantees, and correction obligations contained in the assigned contract will govern with respect to Contractor's performance obligations to Owner for the Work described in the assigned contract.

7.18 *Indemnification*

A. To the fullest extent permitted by Laws and Regulations, and in addition to any other obligations of Contractor under the Contract or otherwise, Contractor shall indemnify and hold harmless Owner and Engineer, and the officers, directors, members, partners, employees, agents, consultants and subcontractors of each and any of them, from losses, damages, costs, and judgments (including but not limited to all fees and charges of engineers, architects, attorneys, and other professionals, and all court or arbitration or other dispute resolution costs) arising from third-party claims or actions relating to or resulting from the performance or furnishing of the Work, provided that any such claim, action, loss, cost, judgment or damage is attributable to bodily injury, sickness, disease, or death, or to damage to or destruction of tangible property (other than the Work itself), including the loss of use resulting therefrom, but only to the extent caused by any negligent act or omission of Contractor, any Subcontractor, any Supplier, or any individual or entity directly or indirectly employed by any of them to perform any of the Work, or anyone for whose acts any of them may be liable.

B. In any and all claims against Owner or Engineer, or any of their officers, directors, members, partners, employees, agents, consultants, or subcontractors, by any employee (or the survivor or personal representative of such employee) of Contractor, any Subcontractor, any Supplier, or any individual or entity directly or indirectly employed by any of them to perform any of the Work, or anyone for whose acts any of them may be liable, the indemnification obligation under Paragraph 7.18.A will not be limited in any way by any limitation on the amount or type of damages, compensation, or benefits payable by or for Contractor or any such Subcontractor, Supplier, or other individual or entity under workers' compensation acts, disability benefit acts, or other employee benefit acts.

Copyright© 2018 National Society of Professional Engineers, American Council of Engineering Companies, and American Society of Civil Engineers. All rights reserved.

7.19 *Delegation of Professional Design Services*

A. Owner may require Contractor to provide professional design services for a portion of the Work by express delegation in the Contract Documents. Such delegation will specify the performance and design criteria that such services must satisfy, and the Submittals that Contractor must furnish to Engineer with respect to the Owner-delegated design.

B. Contractor shall cause such Owner-delegated professional design services to be provided pursuant to the professional standard of care by a properly licensed design professional, whose signature and seal must appear on all drawings, calculations, specifications, certifications, and Submittals prepared by such design professional. Such design professional must issue all certifications of design required by Laws and Regulations.

C. If a Shop Drawing or other Submittal related to the Owner-delegated design is prepared by Contractor, a Subcontractor, or others for submittal to Engineer, then such Shop Drawing or other Submittal must bear the written approval of Contractor's design professional when submitted by Contractor to Engineer.

D. Owner and Engineer shall be entitled to rely upon the adequacy, accuracy, and completeness of the services, certifications, and approvals performed or provided by the design professionals retained or employed by Contractor under an Owner-delegated design, subject to the professional standard of care and the performance and design criteria stated in the Contract Documents.

E. Pursuant to this Paragraph 7.19, Engineer's review, approval, and other determinations regarding design drawings, calculations, specifications, certifications, and other Submittals furnished by Contractor pursuant to an Owner-delegated design will be only for the following limited purposes:

1. Checking for conformance with the requirements of this Paragraph 7.19;

2. Confirming that Contractor (through its design professionals) has used the performance and design criteria specified in the Contract Documents; and

3. Establishing that the design furnished by Contractor is consistent with the design concept expressed in the Contract Documents.

F. Contractor shall not be responsible for the adequacy of performance or design criteria specified by Owner or Engineer.

G. Contractor is not required to provide professional services in violation of applicable Laws and Regulations.

ARTICLE 8—OTHER WORK AT THE SITE

8.01 *Other Work*

A. In addition to and apart from the Work under the Contract Documents, the Owner may perform other work at or adjacent to the Site. Such other work may be performed by Owner's employees, or through contracts between the Owner and third parties. Owner may also arrange to have third-party utility owners perform work on their utilities and facilities at or adjacent to the Site.

Copyright© 2018 National Society of Professional Engineers, American Council of Engineering Companies, and American Society of Civil Engineers. All rights reserved.

B. If Owner performs other work at or adjacent to the Site with Owner's employees, or through contracts for such other work, then Owner shall give Contractor written notice thereof prior to starting any such other work. If Owner has advance information regarding the start of any third-party utility work that Owner has arranged to take place at or adjacent to the Site, Owner shall provide such information to Contractor.

C. Contractor shall afford proper and safe access to the Site to each contractor that performs such other work, each utility owner performing other work, and Owner, if Owner is performing other work with Owner's employees, and provide a reasonable opportunity for the introduction and storage of materials and equipment and the execution of such other work.

D. Contractor shall do all cutting, fitting, and patching of the Work that may be required to properly connect or otherwise make its several parts come together and properly integrate with such other work. Contractor shall not endanger any work of others by cutting, excavating, or otherwise altering such work; provided, however, that Contractor may cut or alter others' work with the written consent of Engineer and the others whose work will be affected.

E. If the proper execution or results of any part of Contractor's Work depends upon work performed by others, Contractor shall inspect such other work and promptly report to Engineer in writing any delays, defects, or deficiencies in such other work that render it unavailable or unsuitable for the proper execution and results of Contractor's Work. Contractor's failure to so report will constitute an acceptance of such other work as fit and proper for integration with Contractor's Work except for latent defects and deficiencies in such other work.

F. The provisions of this article are not applicable to work that is performed by third-party utilities or other third-party entities without a contract with Owner, or that is performed without having been arranged by Owner. If such work occurs, then any related delay, disruption, or interference incurred by Contractor is governed by the provisions of Paragraph 4.05.C.3.

8.02 *Coordination*

A. If Owner intends to contract with others for the performance of other work at or adjacent to the Site, to perform other work at or adjacent to the Site with Owner's employees, or to arrange to have utility owners perform work at or adjacent to the Site, the following will be set forth in the Supplementary Conditions or provided to Contractor prior to the start of any such other work:

1. The identity of the individual or entity that will have authority and responsibility for coordination of the activities among the various contractors;

2. An itemization of the specific matters to be covered by such authority and responsibility; and

3. The extent of such authority and responsibilities.

B. Unless otherwise provided in the Supplementary Conditions, Owner shall have sole authority and responsibility for such coordination.

Copyright© 2018 National Society of Professional Engineers, American Council of Engineering Companies, and American Society of Civil Engineers. All rights reserved.

8.03 *Legal Relationships*

A. If, in the course of performing other work for Owner at or adjacent to the Site, the Owner's employees, any other contractor working for Owner, or any utility owner that Owner has arranged to perform work, causes damage to the Work or to the property of Contractor or its Subcontractors, or delays, disrupts, interferes with, or increases the scope or cost of the performance of the Work, through actions or inaction, then Contractor shall be entitled to an equitable adjustment in the Contract Price or the Contract Times. Contractor must submit any Change Proposal seeking an equitable adjustment in the Contract Price or the Contract Times under this paragraph within 30 days of the damaging, delaying, disrupting, or interfering event. The entitlement to, and extent of, any such equitable adjustment will take into account information (if any) regarding such other work that was provided to Contractor in the Contract Documents prior to the submittal of the Bid or the final negotiation of the terms of the Contract, and any remedies available to Contractor under Laws or Regulations concerning utility action or inaction. When applicable, any such equitable adjustment in Contract Price will be conditioned on Contractor assigning to Owner all Contractor's rights against such other contractor or utility owner with respect to the damage, delay, disruption, or interference that is the subject of the adjustment. Contractor's entitlement to an adjustment of the Contract Times or Contract Price is subject to the provisions of Paragraphs 4.05.D and 4.05.E.

B. Contractor shall take reasonable and customary measures to avoid damaging, delaying, disrupting, or interfering with the work of Owner, any other contractor, or any utility owner performing other work at or adjacent to the Site.

1. If Contractor fails to take such measures and as a result damages, delays, disrupts, or interferes with the work of any such other contractor or utility owner, then Owner may impose a set-off against payments due Contractor, and assign to such other contractor or utility owner the Owner's contractual rights against Contractor with respect to the breach of the obligations set forth in this Paragraph 8.03.B.

2. When Owner is performing other work at or adjacent to the Site with Owner's employees, Contractor shall be liable to Owner for damage to such other work, and for the reasonable direct delay, disruption, and interference costs incurred by Owner as a result of Contractor's failure to take reasonable and customary measures with respect to Owner's other work. In response to such damage, delay, disruption, or interference, Owner may impose a set-off against payments due Contractor.

C. If Contractor damages, delays, disrupts, or interferes with the work of any other contractor, or any utility owner performing other work at or adjacent to the Site, through Contractor's failure to take reasonable and customary measures to avoid such impacts, or if any claim arising out of Contractor's actions, inactions, or negligence in performance of the Work at or adjacent to the Site is made by any such other contractor or utility owner against Contractor, Owner, or Engineer, then Contractor shall (1) promptly attempt to settle the claim as to all parties through negotiations with such other contractor or utility owner, or otherwise resolve the claim by arbitration or other dispute resolution proceeding or at law, and (2) indemnify and hold harmless Owner and Engineer, and the officers, directors, members, partners, employees, agents, consultants and subcontractors of each and any of them from and against any such claims, and against all costs, losses, and damages (including but not limited to all fees and charges of engineers, architects, attorneys, and other professionals and all court or

Copyright© 2018 National Society of Professional Engineers, American Council of Engineering Companies, and American Society of Civil Engineers. All rights reserved.

arbitration or other dispute resolution costs) arising out of or relating to such damage, delay, disruption, or interference.

ARTICLE 9—OWNER'S RESPONSIBILITIES

9.01 *Communications to Contractor*

A. Except as otherwise provided in these General Conditions, Owner shall issue all communications to Contractor through Engineer.

9.02 *Replacement of Engineer*

A. Owner may at its discretion appoint an engineer to replace Engineer, provided Contractor makes no reasonable objection to the replacement engineer. The replacement engineer's status under the Contract Documents will be that of the former Engineer.

9.03 *Furnish Data*

A. Owner shall promptly furnish the data required of Owner under the Contract Documents.

9.04 *Pay When Due*

A. Owner shall make payments to Contractor when they are due as provided in the Agreement.

9.05 *Lands and Easements; Reports, Tests, and Drawings*

A. Owner's duties with respect to providing lands and easements are set forth in Paragraph 5.01.

B. Owner's duties with respect to providing engineering surveys to establish reference points are set forth in Paragraph 4.03.

C. Article 5 refers to Owner's identifying and making available to Contractor copies of reports of explorations and tests of conditions at the Site, and drawings of physical conditions relating to existing surface or subsurface structures at the Site.

9.06 *Insurance*

A. Owner's responsibilities, if any, with respect to purchasing and maintaining liability and property insurance are set forth in Article 6.

9.07 *Change Orders*

A. Owner's responsibilities with respect to Change Orders are set forth in Article 11.

9.08 *Inspections, Tests, and Approvals*

A. Owner's responsibility with respect to certain inspections, tests, and approvals is set forth in Paragraph 14.02.B.

9.09 *Limitations on Owner's Responsibilities*

A. The Owner shall not supervise, direct, or have control or authority over, nor be responsible for, Contractor's means, methods, techniques, sequences, or procedures of construction, or the safety precautions and programs incident thereto, or for any failure of Contractor to comply with Laws and Regulations applicable to the performance of the Work. Owner will not be responsible for Contractor's failure to perform the Work in accordance with the Contract Documents.

Copyright© 2018 National Society of Professional Engineers, American Council of Engineering Companies, and American Society of Civil Engineers. All rights reserved.

9.10 *Undisclosed Hazardous Environmental Condition*

A. Owner's responsibility in respect to an undisclosed Hazardous Environmental Condition is set forth in Paragraph 5.06.

9.11 *Evidence of Financial Arrangements*

A. Upon request of Contractor, Owner shall furnish Contractor reasonable evidence that financial arrangements have been made to satisfy Owner's obligations under the Contract (including obligations under proposed changes in the Work).

9.12 *Safety Programs*

A. While at the Site, Owner's employees and representatives shall comply with the specific applicable requirements of Contractor's safety programs of which Owner has been informed.

B. Owner shall furnish copies of any applicable Owner safety programs to Contractor.

ARTICLE 10—ENGINEER'S STATUS DURING CONSTRUCTION

10.01 *Owner's Representative*

A. Engineer will be Owner's representative during the construction period. The duties and responsibilities and the limitations of authority of Engineer as Owner's representative during construction are set forth in the Contract.

10.02 *Visits to Site*

A. Engineer will make visits to the Site at intervals appropriate to the various stages of construction as Engineer deems necessary in order to observe, as an experienced and qualified design professional, the progress that has been made and the quality of the various aspects of Contractor's executed Work. Based on information obtained during such visits and observations, Engineer, for the benefit of Owner, will determine, in general, if the Work is proceeding in accordance with the Contract Documents. Engineer will not be required to make exhaustive or continuous inspections on the Site to check the quality or quantity of the Work. Engineer's efforts will be directed toward providing for Owner a greater degree of confidence that the completed Work will conform generally to the Contract Documents. On the basis of such visits and observations, Engineer will keep Owner informed of the progress of the Work and will endeavor to guard Owner against defective Work.

B. Engineer's visits and observations are subject to all the limitations on Engineer's authority and responsibility set forth in Paragraph 10.07. Particularly, but without limitation, during or as a result of Engineer's visits or observations of Contractor's Work, Engineer will not supervise, direct, control, or have authority over or be responsible for Contractor's means, methods, techniques, sequences, or procedures of construction, or the safety precautions and programs incident thereto, or for any failure of Contractor to comply with Laws and Regulations applicable to the performance of the Work.

10.03 *Resident Project Representative*

A. If Owner and Engineer have agreed that Engineer will furnish a Resident Project Representative to represent Engineer at the Site and assist Engineer in observing the progress and quality of the Work, then the authority and responsibilities of any such Resident Project Representative will be as provided in the Supplementary Conditions, and limitations on the

Copyright© 2018 National Society of Professional Engineers, American Council of Engineering Companies, and American Society of Civil Engineers. All rights reserved.

responsibilities thereof will be as provided in the Supplementary Conditions and in Paragraph 10.07.

B. If Owner designates an individual or entity who is not Engineer's consultant, agent, or employee to represent Owner at the Site, then the responsibilities and authority of such individual or entity will be as provided in the Supplementary Conditions.

10.04 *Engineer's Authority*

A. Engineer has the authority to reject Work in accordance with Article 14.

B. Engineer's authority as to Submittals is set forth in Paragraph 7.16.

C. Engineer's authority as to design drawings, calculations, specifications, certifications and other Submittals from Contractor in response to Owner's delegation (if any) to Contractor of professional design services, is set forth in Paragraph 7.19.

D. Engineer's authority as to changes in the Work is set forth in Article 11.

E. Engineer's authority as to Applications for Payment is set forth in Article 15.

10.05 *Determinations for Unit Price Work*

A. Engineer will determine the actual quantities and classifications of Unit Price Work performed by Contractor as set forth in Paragraph 13.03.

10.06 *Decisions on Requirements of Contract Documents and Acceptability of Work*

A. Engineer will render decisions regarding the requirements of the Contract Documents, and judge the acceptability of the Work, pursuant to the specific procedures set forth herein for initial interpretations, Change Proposals, and acceptance of the Work. In rendering such decisions and judgments, Engineer will not show partiality to Owner or Contractor, and will not be liable to Owner, Contractor, or others in connection with any proceedings, interpretations, decisions, or judgments conducted or rendered in good faith.

10.07 *Limitations on Engineer's Authority and Responsibilities*

A. Neither Engineer's authority or responsibility under this Article 10 or under any other provision of the Contract, nor any decision made by Engineer in good faith either to exercise or not exercise such authority or responsibility or the undertaking, exercise, or performance of any authority or responsibility by Engineer, will create, impose, or give rise to any duty in contract, tort, or otherwise owed by Engineer to Contractor, any Subcontractor, any Supplier, any other individual or entity, or to any surety for or employee or agent of any of them.

B. Engineer will not supervise, direct, control, or have authority over or be responsible for Contractor's means, methods, techniques, sequences, or procedures of construction, or the safety precautions and programs incident thereto, or for any failure of Contractor to comply with Laws and Regulations applicable to the performance of the Work. Engineer will not be responsible for Contractor's failure to perform the Work in accordance with the Contract Documents.

C. Engineer will not be responsible for the acts or omissions of Contractor or of any Subcontractor, any Supplier, or of any other individual or entity performing any of the Work.

D. Engineer's review of the final Application for Payment and accompanying documentation, and all maintenance and operating instructions, schedules, guarantees, bonds, certificates of

Copyright© 2018 National Society of Professional Engineers, American Council of Engineering Companies, and American Society of Civil Engineers. All rights reserved.

inspection, tests and approvals, and other documentation required to be delivered by Contractor under Paragraph 15.06.A, will only be to determine generally that their content complies with the requirements of, and in the case of certificates of inspections, tests, and approvals, that the results certified indicate compliance with the Contract Documents.

E. The limitations upon authority and responsibility set forth in this Paragraph 10.07 also apply to the Resident Project Representative, if any.

10.08 *Compliance with Safety Program*

A. While at the Site, Engineer's employees and representatives will comply with the specific applicable requirements of Owner's and Contractor's safety programs of which Engineer has been informed.

ARTICLE 11—CHANGES TO THE CONTRACT

11.01 *Amending and Supplementing the Contract*

A. The Contract may be amended or supplemented by a Change Order, a Work Change Directive, or a Field Order.

B. If an amendment or supplement to the Contract includes a change in the Contract Price or the Contract Times, such amendment or supplement must be set forth in a Change Order.

C. All changes to the Contract that involve (1) the performance or acceptability of the Work, (2) the design (as set forth in the Drawings, Specifications, or otherwise), or (3) other engineering or technical matters, must be supported by Engineer's recommendation. Owner and Contractor may amend other terms and conditions of the Contract without the recommendation of the Engineer.

11.02 *Change Orders*

A. Owner and Contractor shall execute appropriate Change Orders covering:

1. Changes in Contract Price or Contract Times which are agreed to by the parties, including any undisputed sum or amount of time for Work actually performed in accordance with a Work Change Directive;

2. Changes in Contract Price resulting from an Owner set-off, unless Contractor has duly contested such set-off;

3. Changes in the Work which are: (a) ordered by Owner pursuant to Paragraph 11.05, (b) required because of Owner's acceptance of defective Work under Paragraph 14.04 or Owner's correction of defective Work under Paragraph 14.07, or (c) agreed to by the parties, subject to the need for Engineer's recommendation if the change in the Work involves the design (as set forth in the Drawings, Specifications, or otherwise) or other engineering or technical matters; and

4. Changes that embody the substance of any final and binding results under: Paragraph 11.03.B, resolving the impact of a Work Change Directive; Paragraph 11.09, concerning Change Proposals; Article 12, Claims; Paragraph 13.02.D, final adjustments resulting from allowances; Paragraph 13.03.D, final adjustments relating to determination of quantities for Unit Price Work; and similar provisions.

Copyright© 2018 National Society of Professional Engineers, American Council of Engineering Companies, and American Society of Civil Engineers. All rights reserved.

B. If Owner or Contractor refuses to execute a Change Order that is required to be executed under the terms of Paragraph 11.02.A, it will be deemed to be of full force and effect, as if fully executed.

11.03 *Work Change Directives*

A. A Work Change Directive will not change the Contract Price or the Contract Times but is evidence that the parties expect that the modification ordered or documented by a Work Change Directive will be incorporated in a subsequently issued Change Order, following negotiations by the parties as to the Work Change Directive's effect, if any, on the Contract Price and Contract Times; or, if negotiations are unsuccessful, by a determination under the terms of the Contract Documents governing adjustments, expressly including Paragraph 11.07 regarding change of Contract Price.

B. If Owner has issued a Work Change Directive and:

1. Contractor believes that an adjustment in Contract Times or Contract Price is necessary, then Contractor shall submit any Change Proposal seeking such an adjustment no later than 30 days after the completion of the Work set out in the Work Change Directive.

2. Owner believes that an adjustment in Contract Times or Contract Price is necessary, then Owner shall submit any Claim seeking such an adjustment no later than 60 days after issuance of the Work Change Directive.

11.04 *Field Orders*

A. Engineer may authorize minor changes in the Work if the changes do not involve an adjustment in the Contract Price or the Contract Times and are compatible with the design concept of the completed Project as a functioning whole as indicated by the Contract Documents. Such changes will be accomplished by a Field Order and will be binding on Owner and also on Contractor, which shall perform the Work involved promptly.

B. If Contractor believes that a Field Order justifies an adjustment in the Contract Price or Contract Times, then before proceeding with the Work at issue, Contractor shall submit a Change Proposal as provided herein.

11.05 *Owner-Authorized Changes in the Work*

A. Without invalidating the Contract and without notice to any surety, Owner may, at any time or from time to time, order additions, deletions, or revisions in the Work. Changes involving the design (as set forth in the Drawings, Specifications, or otherwise) or other engineering or technical matters will be supported by Engineer's recommendation.

B. Such changes in the Work may be accomplished by a Change Order, if Owner and Contractor have agreed as to the effect, if any, of the changes on Contract Times or Contract Price; or by a Work Change Directive. Upon receipt of any such document, Contractor shall promptly proceed with the Work involved; or, in the case of a deletion in the Work, promptly cease construction activities with respect to such deleted Work. Added or revised Work must be performed under the applicable conditions of the Contract Documents.

C. Nothing in this Paragraph 11.05 obligates Contractor to undertake work that Contractor reasonably concludes cannot be performed in a manner consistent with Contractor's safety obligations under the Contract Documents or Laws and Regulations.

Copyright© 2018 National Society of Professional Engineers, American Council of Engineering Companies, and American Society of Civil Engineers. All rights reserved.

11.06 *Unauthorized Changes in the Work*

A. Contractor shall not be entitled to an increase in the Contract Price or an extension of the Contract Times with respect to any work performed that is not required by the Contract Documents, as amended, modified, or supplemented, except in the case of an emergency as provided in Paragraph 7.15 or in the case of uncovering Work as provided in Paragraph 14.05.C.2.

11.07 *Change of Contract Price*

A. The Contract Price may only be changed by a Change Order. Any Change Proposal for an adjustment in the Contract Price must comply with the provisions of Paragraph 11.09. Any Claim for an adjustment of Contract Price must comply with the provisions of Article 12.

B. An adjustment in the Contract Price will be determined as follows:

1. Where the Work involved is covered by unit prices contained in the Contract Documents, then by application of such unit prices to the quantities of the items involved (subject to the provisions of Paragraph 13.03);

2. Where the Work involved is not covered by unit prices contained in the Contract Documents, then by a mutually agreed lump sum (which may include an allowance for overhead and profit not necessarily in accordance with Paragraph 11.07.C.2); or

3. Where the Work involved is not covered by unit prices contained in the Contract Documents and the parties do not reach mutual agreement to a lump sum, then on the basis of the Cost of the Work (determined as provided in Paragraph 13.01) plus a Contractor's fee for overhead and profit (determined as provided in Paragraph 11.07.C).

C. *Contractor's Fee*: When applicable, the Contractor's fee for overhead and profit will be determined as follows:

1. A mutually acceptable fixed fee; or

2. If a fixed fee is not agreed upon, then a fee based on the following percentages of the various portions of the Cost of the Work:

a. For costs incurred under Paragraphs 13.01.B.1 and 13.01.B.2, the Contractor's fee will be 15 percent;

b. For costs incurred under Paragraph 13.01.B.3, the Contractor's fee will be 5 percent;

c. Where one or more tiers of subcontracts are on the basis of Cost of the Work plus a fee and no fixed fee is agreed upon, the intent of Paragraphs 11.07.C.2.a and 11.07.C.2.b is that the Contractor's fee will be based on: (1) a fee of 15 percent of the costs incurred under Paragraphs 13.01.B.1 and 13.01.B.2 by the Subcontractor that actually performs the Work, at whatever tier, and (2) with respect to Contractor itself and to any Subcontractors of a tier higher than that of the Subcontractor that actually performs the Work, a fee of 5 percent of the amount (fee plus underlying costs incurred) attributable to the next lower tier Subcontractor; provided, however, that for any such subcontracted Work the maximum total fee to be paid by Owner will be no greater than 27 percent of the costs incurred by the Subcontractor that actually performs the Work;

Copyright© 2018 National Society of Professional Engineers, American Council of Engineering Companies, and American Society of Civil Engineers. All rights reserved.

d. No fee will be payable on the basis of costs itemized under Paragraphs 13.01.B.4, 13.01.B.5, and 13.01.C;

e. The amount of credit to be allowed by Contractor to Owner for any change which results in a net decrease in Cost of the Work will be the amount of the actual net decrease in Cost of the Work and a deduction of an additional amount equal to 5 percent of such actual net decrease in Cost of the Work; and

f. When both additions and credits are involved in any one change or Change Proposal, the adjustment in Contractor's fee will be computed by determining the sum of the costs in each of the cost categories in Paragraph 13.01.B (specifically, payroll costs, Paragraph 13.01.B.1; incorporated materials and equipment costs, Paragraph 13.01.B.2; Subcontract costs, Paragraph 13.01.B.3; special consultants costs, Paragraph 13.01.B.4; and other costs, Paragraph 13.01.B.5) and applying to each such cost category sum the appropriate fee from Paragraphs 11.07.C.2.a through 11.07.C.2.e, inclusive.

11.08 *Change of Contract Times*

A. The Contract Times may only be changed by a Change Order. Any Change Proposal for an adjustment in the Contract Times must comply with the provisions of Paragraph 11.09. Any Claim for an adjustment in the Contract Times must comply with the provisions of Article 12.

B. Delay, disruption, and interference in the Work, and any related changes in Contract Times, are addressed in and governed by Paragraph 4.05.

11.09 *Change Proposals*

A. *Purpose and Content*: Contractor shall submit a Change Proposal to Engineer to request an adjustment in the Contract Times or Contract Price; contest an initial decision by Engineer concerning the requirements of the Contract Documents or relating to the acceptability of the Work under the Contract Documents; challenge a set-off against payment due; or seek other relief under the Contract. The Change Proposal will specify any proposed change in Contract Times or Contract Price, or other proposed relief, and explain the reason for the proposed change, with citations to any governing or applicable provisions of the Contract Documents. Each Change Proposal will address only one issue, or a set of closely related issues.

B. *Change Proposal Procedures*

1. *Submittal*: Contractor shall submit each Change Proposal to Engineer within 30 days after the start of the event giving rise thereto, or after such initial decision.

2. *Supporting Data*: The Contractor shall submit supporting data, including the proposed change in Contract Price or Contract Time (if any), to the Engineer and Owner within 15 days after the submittal of the Change Proposal.

a. Change Proposals based on or related to delay, interruption, or interference must comply with the provisions of Paragraphs 4.05.D and 4.05.E.

b. Change proposals related to a change of Contract Price must include full and detailed accounts of materials incorporated into the Work and labor and equipment used for the subject Work.

Copyright© 2018 National Society of Professional Engineers, American Council of Engineering Companies, and American Society of Civil Engineers. All rights reserved.

The supporting data must be accompanied by a written statement that the supporting data are accurate and complete, and that any requested time or price adjustment is the entire adjustment to which Contractor believes it is entitled as a result of said event.

3. *Engineer's Initial Review*: Engineer will advise Owner regarding the Change Proposal, and consider any comments or response from Owner regarding the Change Proposal. If in its discretion Engineer concludes that additional supporting data is needed before conducting a full review and making a decision regarding the Change Proposal, then Engineer may request that Contractor submit such additional supporting data by a date specified by Engineer, prior to Engineer beginning its full review of the Change Proposal.

4. *Engineer's Full Review and Action on the Change Proposal*: Upon receipt of Contractor's supporting data (including any additional data requested by Engineer), Engineer will conduct a full review of each Change Proposal and, within 30 days after such receipt of the Contractor's supporting data, either approve the Change Proposal in whole, deny it in whole, or approve it in part and deny it in part. Such actions must be in writing, with a copy provided to Owner and Contractor. If Engineer does not take action on the Change Proposal within 30 days, then either Owner or Contractor may at any time thereafter submit a letter to the other party indicating that as a result of Engineer's inaction the Change Proposal is deemed denied, thereby commencing the time for appeal of the denial under Article 12.

5. *Binding Decision*: Engineer's decision is final and binding upon Owner and Contractor, unless Owner or Contractor appeals the decision by filing a Claim under Article 12.

C. *Resolution of Certain Change Proposals*: If the Change Proposal does not involve the design (as set forth in the Drawings, Specifications, or otherwise), the acceptability of the Work, or other engineering or technical matters, then Engineer will notify the parties in writing that the Engineer is unable to resolve the Change Proposal. For purposes of further resolution of such a Change Proposal, such notice will be deemed a denial, and Contractor may choose to seek resolution under the terms of Article 12.

D. *Post-Completion*: Contractor shall not submit any Change Proposals after Engineer issues a written recommendation of final payment pursuant to Paragraph 15.06.B.

11.10 *Notification to Surety*

A. If the provisions of any bond require notice to be given to a surety of any change affecting the general scope of the Work or the provisions of the Contract Documents (including, but not limited to, Contract Price or Contract Times), the giving of any such notice will be Contractor's responsibility. The amount of each applicable bond will be adjusted to reflect the effect of any such change.

ARTICLE 12—CLAIMS

12.01 *Claims*

A. *Claims Process*: The following disputes between Owner and Contractor are subject to the Claims process set forth in this article:

1. Appeals by Owner or Contractor of Engineer's decisions regarding Change Proposals;

Copyright© 2018 National Society of Professional Engineers, American Council of Engineering Companies, and American Society of Civil Engineers. All rights reserved.

2. Owner demands for adjustments in the Contract Price or Contract Times, or other relief under the Contract Documents;

3. Disputes that Engineer has been unable to address because they do not involve the design (as set forth in the Drawings, Specifications, or otherwise), the acceptability of the Work, or other engineering or technical matters; and

4. Subject to the waiver provisions of Paragraph 15.07, any dispute arising after Engineer has issued a written recommendation of final payment pursuant to Paragraph 15.06.B.

B. *Submittal of Claim*: The party submitting a Claim shall deliver it directly to the other party to the Contract promptly (but in no event later than 30 days) after the start of the event giving rise thereto; in the case of appeals regarding Change Proposals within 30 days of the decision under appeal. The party submitting the Claim shall also furnish a copy to the Engineer, for its information only. The responsibility to substantiate a Claim rests with the party making the Claim. In the case of a Claim by Contractor seeking an increase in the Contract Times or Contract Price, Contractor shall certify that the Claim is made in good faith, that the supporting data are accurate and complete, and that to the best of Contractor's knowledge and belief the amount of time or money requested accurately reflects the full amount to which Contractor is entitled.

C. *Review and Resolution*: The party receiving a Claim shall review it thoroughly, giving full consideration to its merits. The two parties shall seek to resolve the Claim through the exchange of information and direct negotiations. The parties may extend the time for resolving the Claim by mutual agreement. All actions taken on a Claim will be stated in writing and submitted to the other party, with a copy to Engineer.

D. *Mediation*

1. At any time after initiation of a Claim, Owner and Contractor may mutually agree to mediation of the underlying dispute. The agreement to mediate will stay the Claim submittal and response process.

2. If Owner and Contractor agree to mediation, then after 60 days from such agreement, either Owner or Contractor may unilaterally terminate the mediation process, and the Claim submittal and decision process will resume as of the date of the termination. If the mediation proceeds but is unsuccessful in resolving the dispute, the Claim submittal and decision process will resume as of the date of the conclusion of the mediation, as determined by the mediator.

3. Owner and Contractor shall each pay one-half of the mediator's fees and costs.

E. *Partial Approval*: If the party receiving a Claim approves the Claim in part and denies it in part, such action will be final and binding unless within 30 days of such action the other party invokes the procedure set forth in Article 17 for final resolution of disputes.

F. *Denial of Claim*: If efforts to resolve a Claim are not successful, the party receiving the Claim may deny it by giving written notice of denial to the other party. If the receiving party does not take action on the Claim within 90 days, then either Owner or Contractor may at any time thereafter submit a letter to the other party indicating that as a result of the inaction, the Claim is deemed denied, thereby commencing the time for appeal of the denial. A denial of the Claim will be final and binding unless within 30 days of the denial the other party invokes the procedure set forth in Article 17 for the final resolution of disputes.

Copyright© 2018 National Society of Professional Engineers, American Council of Engineering Companies, and American Society of Civil Engineers. All rights reserved.

G. *Final and Binding Results*: If the parties reach a mutual agreement regarding a Claim, whether through approval of the Claim, direct negotiations, mediation, or otherwise; or if a Claim is approved in part and denied in part, or denied in full, and such actions become final and binding; then the results of the agreement or action on the Claim will be incorporated in a Change Order or other written document to the extent they affect the Contract, including the Work, the Contract Times, or the Contract Price.

ARTICLE 13—COST OF THE WORK; ALLOWANCES; UNIT PRICE WORK

13.01 *Cost of the Work*

A. *Purposes for Determination of Cost of the Work*: The term Cost of the Work means the sum of all costs necessary for the proper performance of the Work at issue, as further defined below. The provisions of this Paragraph 13.01 are used for two distinct purposes:

1. To determine Cost of the Work when Cost of the Work is a component of the Contract Price, under cost-plus-fee, time-and-materials, or other cost-based terms; or

2. When needed to determine the value of a Change Order, Change Proposal, Claim, set-off, or other adjustment in Contract Price. When the value of any such adjustment is determined on the basis of Cost of the Work, Contractor is entitled only to those additional or incremental costs required because of the change in the Work or because of the event giving rise to the adjustment.

B. *Costs Included*: Except as otherwise may be agreed to in writing by Owner, costs included in the Cost of the Work will be in amounts no higher than those commonly incurred in the locality of the Project, will not include any of the costs itemized in Paragraph 13.01.C, and will include only the following items:

1. Payroll costs for employees in the direct employ of Contractor in the performance of the Work under schedules of job classifications agreed upon by Owner and Contractor in advance of the subject Work. Such employees include, without limitation, superintendents, foremen, safety managers, safety representatives, and other personnel employed full time on the Work. Payroll costs for employees not employed full time on the Work will be apportioned on the basis of their time spent on the Work. Payroll costs include, but are not limited to, salaries and wages plus the cost of fringe benefits, which include social security contributions, unemployment, excise, and payroll taxes, workers' compensation, health and retirement benefits, sick leave, and vacation and holiday pay applicable thereto. The expenses of performing Work outside of regular working hours, on Saturday, Sunday, or legal holidays, will be included in the above to the extent authorized by Owner.

2. Cost of all materials and equipment furnished and incorporated in the Work, including costs of transportation and storage thereof, and Suppliers' field services required in connection therewith. All cash discounts accrue to Contractor unless Owner deposits funds with Contractor with which to make payments, in which case the cash discounts will accrue to Owner. All trade discounts, rebates, and refunds and returns from sale of surplus materials and equipment will accrue to Owner, and Contractor shall make provisions so that they may be obtained.

3. Payments made by Contractor to Subcontractors for Work performed by Subcontractors. If required by Owner, Contractor shall obtain competitive bids from subcontractors

Copyright© 2018 National Society of Professional Engineers, American Council of Engineering Companies, and American Society of Civil Engineers. All rights reserved.

acceptable to Owner and Contractor and shall deliver such bids to Owner, which will then determine, with the advice of Engineer, which bids, if any, will be acceptable. If any subcontract provides that the Subcontractor is to be paid on the basis of Cost of the Work plus a fee, the Subcontractor's Cost of the Work and fee will be determined in the same manner as Contractor's Cost of the Work and fee as provided in this Paragraph 13.01.

4. Costs of special consultants (including but not limited to engineers, architects, testing laboratories, surveyors, attorneys, and accountants) employed or retained for services specifically related to the Work.

5. Other costs consisting of the following:

    a. The proportion of necessary transportation, travel, and subsistence expenses of Contractor's employees incurred in discharge of duties connected with the Work.

    b. Cost, including transportation and maintenance, of all materials, supplies, equipment, machinery, appliances, office, and temporary facilities at the Site, which are consumed in the performance of the Work, and cost, less market value, of such items used but not consumed which remain the property of Contractor.

        1) In establishing included costs for materials such as scaffolding, plating, or sheeting, consideration will be given to the actual or the estimated life of the material for use on other projects; or rental rates may be established on the basis of purchase or salvage value of such items, whichever is less. Contractor will not be eligible for compensation for such items in an amount that exceeds the purchase cost of such item.

    c. *Construction Equipment Rental*

        1) Rentals of all construction equipment and machinery, and the parts thereof, in accordance with rental agreements approved by Owner as to price (including any surcharge or special rates applicable to overtime use of the construction equipment or machinery), and the costs of transportation, loading, unloading, assembly, dismantling, and removal thereof. All such costs will be in accordance with the terms of said rental agreements. The rental of any such equipment, machinery, or parts must cease when the use thereof is no longer necessary for the Work.

        2) Costs for equipment and machinery owned by Contractor or a Contractor-related entity will be paid at a rate shown for such equipment in the equipment rental rate book specified in the Supplementary Conditions. An hourly rate will be computed by dividing the monthly rates by 176. These computed rates will include all operating costs.

        3) With respect to Work that is the result of a Change Order, Change Proposal, Claim, set-off, or other adjustment in Contract Price ("changed Work"), included costs will be based on the time the equipment or machinery is in use on the changed Work and the costs of transportation, loading, unloading, assembly, dismantling, and removal when directly attributable to the changed Work. The cost of any such equipment or machinery, or parts thereof, must cease to accrue when the use thereof is no longer necessary for the changed Work.

Copyright© 2018 National Society of Professional Engineers, American Council of Engineering Companies, and American Society of Civil Engineers. All rights reserved.

d. Sales, consumer, use, and other similar taxes related to the Work, and for which Contractor is liable, as imposed by Laws and Regulations.

e. Deposits lost for causes other than negligence of Contractor, any Subcontractor, or anyone directly or indirectly employed by any of them or for whose acts any of them may be liable, and royalty payments and fees for permits and licenses.

f. Losses and damages (and related expenses) caused by damage to the Work, not compensated by insurance or otherwise, sustained by Contractor in connection with the performance of the Work (except losses and damages within the deductible amounts of builder's risk or other property insurance established in accordance with Paragraph 6.04), provided such losses and damages have resulted from causes other than the negligence of Contractor, any Subcontractor, or anyone directly or indirectly employed by any of them or for whose acts any of them may be liable. Such losses include settlements made with the written consent and approval of Owner. No such losses, damages, and expenses will be included in the Cost of the Work for the purpose of determining Contractor's fee.

g. The cost of utilities, fuel, and sanitary facilities at the Site.

h. Minor expenses such as communication service at the Site, express and courier services, and similar petty cash items in connection with the Work.

i. The costs of premiums for all bonds and insurance that Contractor is required by the Contract Documents to purchase and maintain.

C. *Costs Excluded*: The term Cost of the Work does not include any of the following items:

1. Payroll costs and other compensation of Contractor's officers, executives, principals, general managers, engineers, architects, estimators, attorneys, auditors, accountants, purchasing and contracting agents, expediters, timekeepers, clerks, and other personnel employed by Contractor, whether at the Site or in Contractor's principal or branch office for general administration of the Work and not specifically included in the agreed upon schedule of job classifications referred to in Paragraph 13.01.B.1 or specifically covered by Paragraph 13.01.B.4. The payroll costs and other compensation excluded here are to be considered administrative costs covered by the Contractor's fee.

2. The cost of purchasing, renting, or furnishing small tools and hand tools.

3. Expenses of Contractor's principal and branch offices other than Contractor's office at the Site.

4. Any part of Contractor's capital expenses, including interest on Contractor's capital employed for the Work and charges against Contractor for delinquent payments.

5. Costs due to the negligence of Contractor, any Subcontractor, or anyone directly or indirectly employed by any of them or for whose acts any of them may be liable, including but not limited to, the correction of defective Work, disposal of materials or equipment wrongly supplied, and making good any damage to property.

6. Expenses incurred in preparing and advancing Claims.

7. Other overhead or general expense costs of any kind and the costs of any item not specifically and expressly included in Paragraph 13.01.B.

Copyright© 2018 National Society of Professional Engineers, American Council of Engineering Companies, and American Society of Civil Engineers. All rights reserved.

D. *Contractor's Fee*

1. When the Work as a whole is performed on the basis of cost-plus-a-fee, then:

a. Contractor's fee for the Work set forth in the Contract Documents as of the Effective Date of the Contract will be determined as set forth in the Agreement.

b. for any Work covered by a Change Order, Change Proposal, Claim, set-off, or other adjustment in Contract Price on the basis of Cost of the Work, Contractor's fee will be determined as follows:

1) When the fee for the Work as a whole is a percentage of the Cost of the Work, the fee will automatically adjust as the Cost of the Work changes.

2) When the fee for the Work as a whole is a fixed fee, the fee for any additions or deletions will be determined in accordance with Paragraph 11.07.C.2.

2. When the Work as a whole is performed on the basis of a stipulated sum, or any other basis other than cost-plus-a-fee, then Contractor's fee for any Work covered by a Change Order, Change Proposal, Claim, set-off, or other adjustment in Contract Price on the basis of Cost of the Work will be determined in accordance with Paragraph 11.07.C.2.

E. *Documentation and Audit*: Whenever the Cost of the Work for any purpose is to be determined pursuant to this Article 13, Contractor and pertinent Subcontractors will establish and maintain records of the costs in accordance with generally accepted accounting practices. Subject to prior written notice, Owner will be afforded reasonable access, during normal business hours, to all Contractor's accounts, records, books, correspondence, instructions, drawings, receipts, vouchers, memoranda, and similar data relating to the Cost of the Work and Contractor's fee. Contractor shall preserve all such documents for a period of three years after the final payment by Owner. Pertinent Subcontractors will afford such access to Owner, and preserve such documents, to the same extent required of Contractor.

13.02 *Allowances*

A. It is understood that Contractor has included in the Contract Price all allowances so named in the Contract Documents and shall cause the Work so covered to be performed for such sums and by such persons or entities as may be acceptable to Owner and Engineer.

B. *Cash Allowances*: Contractor agrees that:

1. the cash allowances include the cost to Contractor (less any applicable trade discounts) of materials and equipment required by the allowances to be delivered at the Site, and all applicable taxes; and

2. Contractor's costs for unloading and handling on the Site, labor, installation, overhead, profit, and other expenses contemplated for the cash allowances have been included in the Contract Price and not in the allowances, and no demand for additional payment for any of the foregoing will be valid.

C. *Owner's Contingency Allowance*: Contractor agrees that an Owner's contingency allowance, if any, is for the sole use of Owner to cover unanticipated costs.

D. Prior to final payment, an appropriate Change Order will be issued as recommended by Engineer to reflect actual amounts due Contractor for Work covered by allowances, and the Contract Price will be correspondingly adjusted.

Copyright© 2018 National Society of Professional Engineers, American Council of Engineering Companies, and American Society of Civil Engineers. All rights reserved.

13.03 *Unit Price Work*

A. Where the Contract Documents provide that all or part of the Work is to be Unit Price Work, initially the Contract Price will be deemed to include for all Unit Price Work an amount equal to the sum of the unit price for each separately identified item of Unit Price Work times the estimated quantity of each item as indicated in the Agreement.

B. The estimated quantities of items of Unit Price Work are not guaranteed and are solely for the purpose of comparison of Bids and determining an initial Contract Price. Payments to Contractor for Unit Price Work will be based on actual quantities.

C. Each unit price will be deemed to include an amount considered by Contractor to be adequate to cover Contractor's overhead and profit for each separately identified item.

D. Engineer will determine the actual quantities and classifications of Unit Price Work performed by Contractor. Engineer will review with Contractor the Engineer's preliminary determinations on such matters before rendering a written decision thereon (by recommendation of an Application for Payment or otherwise). Engineer's written decision thereon will be final and binding (except as modified by Engineer to reflect changed factual conditions or more accurate data) upon Owner and Contractor, and the final adjustment of Contract Price will be set forth in a Change Order, subject to the provisions of the following paragraph.

E. *Adjustments in Unit Price*

1. Contractor or Owner shall be entitled to an adjustment in the unit price with respect to an item of Unit Price Work if:

a. the quantity of the item of Unit Price Work performed by Contractor differs materially and significantly from the estimated quantity of such item indicated in the Agreement; and

b. Contractor's unit costs to perform the item of Unit Price Work have changed materially and significantly as a result of the quantity change.

2. The adjustment in unit price will account for and be coordinated with any related changes in quantities of other items of Work, and in Contractor's costs to perform such other Work, such that the resulting overall change in Contract Price is equitable to Owner and Contractor.

3. Adjusted unit prices will apply to all units of that item.

ARTICLE 14—TESTS AND INSPECTIONS; CORRECTION, REMOVAL, OR ACCEPTANCE OF DEFECTIVE WORK

14.01 *Access to Work*

A. Owner, Engineer, their consultants and other representatives and personnel of Owner, independent testing laboratories, and authorities having jurisdiction have access to the Site and the Work at reasonable times for their observation, inspection, and testing. Contractor shall provide them proper and safe conditions for such access and advise them of Contractor's safety procedures and programs so that they may comply with such procedures and programs as applicable.

Copyright© 2018 National Society of Professional Engineers, American Council of Engineering Companies, and American Society of Civil Engineers. All rights reserved.

14.02 *Tests, Inspections, and Approvals*

A. Contractor shall give Engineer timely notice of readiness of the Work (or specific parts thereof) for all required inspections and tests, and shall cooperate with inspection and testing personnel to facilitate required inspections and tests.

B. Owner shall retain and pay for the services of an independent inspector, testing laboratory, or other qualified individual or entity to perform all inspections and tests expressly required by the Contract Documents to be furnished and paid for by Owner, except that costs incurred in connection with tests or inspections of covered Work will be governed by the provisions of Paragraph 14.05.

C. If Laws or Regulations of any public body having jurisdiction require any Work (or part thereof) specifically to be inspected, tested, or approved by an employee or other representative of such public body, Contractor shall assume full responsibility for arranging and obtaining such inspections, tests, or approvals, pay all costs in connection therewith, and furnish Engineer the required certificates of inspection or approval.

D. Contractor shall be responsible for arranging, obtaining, and paying for all inspections and tests required:

1. by the Contract Documents, unless the Contract Documents expressly allocate responsibility for a specific inspection or test to Owner;

2. to attain Owner's and Engineer's acceptance of materials or equipment to be incorporated in the Work;

3. by manufacturers of equipment furnished under the Contract Documents;

4. for testing, adjusting, and balancing of mechanical, electrical, and other equipment to be incorporated into the Work; and

5. for acceptance of materials, mix designs, or equipment submitted for approval prior to Contractor's purchase thereof for incorporation in the Work.

Such inspections and tests will be performed by independent inspectors, testing laboratories, or other qualified individuals or entities acceptable to Owner and Engineer.

E. If the Contract Documents require the Work (or part thereof) to be approved by Owner, Engineer, or another designated individual or entity, then Contractor shall assume full responsibility for arranging and obtaining such approvals.

F. If any Work (or the work of others) that is to be inspected, tested, or approved is covered by Contractor without written concurrence of Engineer, Contractor shall, if requested by Engineer, uncover such Work for observation. Such uncovering will be at Contractor's expense unless Contractor had given Engineer timely notice of Contractor's intention to cover the same and Engineer had not acted with reasonable promptness in response to such notice.

14.03 *Defective Work*

A. *Contractor's Obligation*: It is Contractor's obligation to assure that the Work is not defective.

B. *Engineer's Authority*: Engineer has the authority to determine whether Work is defective, and to reject defective Work.

Copyright© 2018 National Society of Professional Engineers, American Council of Engineering Companies, and American Society of Civil Engineers. All rights reserved.

C. *Notice of Defects*: Prompt written notice of all defective Work of which Owner or Engineer has actual knowledge will be given to Contractor.

D. *Correction, or Removal and Replacement*: Promptly after receipt of written notice of defective Work, Contractor shall correct all such defective Work, whether or not fabricated, installed, or completed, or, if Engineer has rejected the defective Work, remove it from the Project and replace it with Work that is not defective.

E. *Preservation of Warranties*: When correcting defective Work, Contractor shall take no action that would void or otherwise impair Owner's special warranty and guarantee, if any, on said Work.

F. *Costs and Damages*: In addition to its correction, removal, and replacement obligations with respect to defective Work, Contractor shall pay all claims, costs, losses, and damages arising out of or relating to defective Work, including but not limited to the cost of the inspection, testing, correction, removal, replacement, or reconstruction of such defective Work, fines levied against Owner by governmental authorities because the Work is defective, and the costs of repair or replacement of work of others resulting from defective Work. Prior to final payment, if Owner and Contractor are unable to agree as to the measure of such claims, costs, losses, and damages resulting from defective Work, then Owner may impose a reasonable set-off against payments due under Article 15.

14.04 *Acceptance of Defective Work*

A. If, instead of requiring correction or removal and replacement of defective Work, Owner prefers to accept it, Owner may do so (subject, if such acceptance occurs prior to final payment, to Engineer's confirmation that such acceptance is in general accord with the design intent and applicable engineering principles, and will not endanger public safety). Contractor shall pay all claims, costs, losses, and damages attributable to Owner's evaluation of and determination to accept such defective Work (such costs to be approved by Engineer as to reasonableness), and for the diminished value of the Work to the extent not otherwise paid by Contractor. If any such acceptance occurs prior to final payment, the necessary revisions in the Contract Documents with respect to the Work will be incorporated in a Change Order. If the parties are unable to agree as to the decrease in the Contract Price, reflecting the diminished value of Work so accepted, then Owner may impose a reasonable set-off against payments due under Article 15. If the acceptance of defective Work occurs after final payment, Contractor shall pay an appropriate amount to Owner.

14.05 *Uncovering Work*

A. Engineer has the authority to require additional inspection or testing of the Work, whether or not the Work is fabricated, installed, or completed.

B. If any Work is covered contrary to the written request of Engineer, then Contractor shall, if requested by Engineer, uncover such Work for Engineer's observation, and then replace the covering, all at Contractor's expense.

C. If Engineer considers it necessary or advisable that covered Work be observed by Engineer or inspected or tested by others, then Contractor, at Engineer's request, shall uncover, expose, or otherwise make available for observation, inspection, or testing as Engineer may require, that portion of the Work in question, and provide all necessary labor, material, and equipment.

Copyright© 2018 National Society of Professional Engineers, American Council of Engineering Companies, and American Society of Civil Engineers. All rights reserved.

1. If it is found that the uncovered Work is defective, Contractor shall be responsible for all claims, costs, losses, and damages arising out of or relating to such uncovering, exposure, observation, inspection, and testing, and of satisfactory replacement or reconstruction (including but not limited to all costs of repair or replacement of work of others); and pending Contractor's full discharge of this responsibility the Owner shall be entitled to impose a reasonable set-off against payments due under Article 15.
2. If the uncovered Work is not found to be defective, Contractor shall be allowed an increase in the Contract Price or an extension of the Contract Times, directly attributable to such uncovering, exposure, observation, inspection, testing, replacement, and reconstruction. If the parties are unable to agree as to the amount or extent thereof, then Contractor may submit a Change Proposal within 30 days of the determination that the Work is not defective.

14.06 *Owner May Stop the Work*

A. If the Work is defective, or Contractor fails to supply sufficient skilled workers or suitable materials or equipment, or fails to perform the Work in such a way that the completed Work will conform to the Contract Documents, then Owner may order Contractor to stop the Work, or any portion thereof, until the cause for such order has been eliminated; however, this right of Owner to stop the Work will not give rise to any duty on the part of Owner to exercise this right for the benefit of Contractor, any Subcontractor, any Supplier, any other individual or entity, or any surety for, or employee or agent of any of them.

14.07 *Owner May Correct Defective Work*

A. If Contractor fails within a reasonable time after written notice from Engineer to correct defective Work, or to remove and replace defective Work as required by Engineer, then Owner may, after 7 days' written notice to Contractor, correct or remedy any such deficiency.

B. In exercising the rights and remedies under this Paragraph 14.07, Owner shall proceed expeditiously. In connection with such corrective or remedial action, Owner may exclude Contractor from all or part of the Site, take possession of all or part of the Work and suspend Contractor's services related thereto, and incorporate in the Work all materials and equipment stored at the Site or for which Owner has paid Contractor but which are stored elsewhere. Contractor shall allow Owner, Owner's representatives, agents and employees, Owner's other contractors, and Engineer and Engineer's consultants access to the Site to enable Owner to exercise the rights and remedies under this paragraph.

C. All claims, costs, losses, and damages incurred or sustained by Owner in exercising the rights and remedies under this Paragraph 14.07 will be charged against Contractor as set-offs against payments due under Article 15. Such claims, costs, losses and damages will include but not be limited to all costs of repair, or replacement of work of others destroyed or damaged by correction, removal, or replacement of Contractor's defective Work.

D. Contractor shall not be allowed an extension of the Contract Times because of any delay in the performance of the Work attributable to the exercise by Owner of Owner's rights and remedies under this Paragraph 14.07.

Copyright© 2018 National Society of Professional Engineers, American Council of Engineering Companies, and American Society of Civil Engineers. All rights reserved.

ARTICLE 15—PAYMENTS TO CONTRACTOR; SET-OFFS; COMPLETION; CORRECTION PERIOD

15.01 *Progress Payments*

A. *Basis for Progress Payments*: The Schedule of Values established as provided in Article 2 will serve as the basis for progress payments and will be incorporated into a form of Application for Payment acceptable to Engineer. Progress payments for Unit Price Work will be based on the number of units completed during the pay period, as determined under the provisions of Paragraph 13.03. Progress payments for cost-based Work will be based on Cost of the Work completed by Contractor during the pay period.

B. *Applications for Payments*

1. At least 20 days before the date established in the Agreement for each progress payment (but not more often than once a month), Contractor shall submit to Engineer for review an Application for Payment filled out and signed by Contractor covering the Work completed as of the date of the Application and accompanied by such supporting documentation as is required by the Contract Documents.

2. If payment is requested on the basis of materials and equipment not incorporated in the Work but delivered and suitably stored at the Site or at another location agreed to in writing, the Application for Payment must also be accompanied by: (a) a bill of sale, invoice, copies of subcontract or purchase order payments, or other documentation establishing full payment by Contractor for the materials and equipment; (b) at Owner's request, documentation warranting that Owner has received the materials and equipment free and clear of all Liens; and (c) evidence that the materials and equipment are covered by appropriate property insurance, a warehouse bond, or other arrangements to protect Owner's interest therein, all of which must be satisfactory to Owner.

3. Beginning with the second Application for Payment, each Application must include an affidavit of Contractor stating that all previous progress payments received by Contractor have been applied to discharge Contractor's legitimate obligations associated with prior Applications for Payment.

4. The amount of retainage with respect to progress payments will be as stipulated in the Agreement.

C. *Review of Applications*

1. Engineer will, within 10 days after receipt of each Application for Payment, including each resubmittal, either indicate in writing a recommendation of payment and present the Application to Owner, or return the Application to Contractor indicating in writing Engineer's reasons for refusing to recommend payment. In the latter case, Contractor may make the necessary corrections and resubmit the Application.

2. Engineer's recommendation of any payment requested in an Application for Payment will constitute a representation by Engineer to Owner, based on Engineer's observations of the executed Work as an experienced and qualified design professional, and on Engineer's review of the Application for Payment and the accompanying data and schedules, that to the best of Engineer's knowledge, information and belief:

a. the Work has progressed to the point indicated;

Copyright© 2018 National Society of Professional Engineers, American Council of Engineering Companies, and American Society of Civil Engineers. All rights reserved.

b. the quality of the Work is generally in accordance with the Contract Documents (subject to an evaluation of the Work as a functioning whole prior to or upon Substantial Completion, the results of any subsequent tests called for in the Contract Documents, a final determination of quantities and classifications for Unit Price Work under Paragraph 13.03, and any other qualifications stated in the recommendation); and

c. the conditions precedent to Contractor's being entitled to such payment appear to have been fulfilled in so far as it is Engineer's responsibility to observe the Work.

3. By recommending any such payment Engineer will not thereby be deemed to have represented that:

a. inspections made to check the quality or the quantity of the Work as it has been performed have been exhaustive, extended to every aspect of the Work in progress, or involved detailed inspections of the Work beyond the responsibilities specifically assigned to Engineer in the Contract; or

b. there may not be other matters or issues between the parties that might entitle Contractor to be paid additionally by Owner or entitle Owner to withhold payment to Contractor.

4. Neither Engineer's review of Contractor's Work for the purposes of recommending payments nor Engineer's recommendation of any payment, including final payment, will impose responsibility on Engineer:

a. to supervise, direct, or control the Work;

b. for the means, methods, techniques, sequences, or procedures of construction, or the safety precautions and programs incident thereto;

c. for Contractor's failure to comply with Laws and Regulations applicable to Contractor's performance of the Work;

d. to make any examination to ascertain how or for what purposes Contractor has used the money paid by Owner; or

e. to determine that title to any of the Work, materials, or equipment has passed to Owner free and clear of any Liens.

5. Engineer may refuse to recommend the whole or any part of any payment if, in Engineer's opinion, it would be incorrect to make the representations to Owner stated in Paragraph 15.01.C.2.

6. Engineer will recommend reductions in payment (set-offs) necessary in Engineer's opinion to protect Owner from loss because:

a. the Work is defective, requiring correction or replacement;

b. the Contract Price has been reduced by Change Orders;

c. Owner has been required to correct defective Work in accordance with Paragraph 14.07, or has accepted defective Work pursuant to Paragraph 14.04;

d. Owner has been required to remove or remediate a Hazardous Environmental Condition for which Contractor is responsible; or

Copyright© 2018 National Society of Professional Engineers, American Council of Engineering Companies, and American Society of Civil Engineers. All rights reserved.

e. Engineer has actual knowledge of the occurrence of any of the events that would constitute a default by Contractor and therefore justify termination for cause under the Contract Documents.

D. *Payment Becomes Due*

1. Ten days after presentation of the Application for Payment to Owner with Engineer's recommendation, the amount recommended (subject to any Owner set-offs) will become due, and when due will be paid by Owner to Contractor.

E. *Reductions in Payment by Owner*

1. In addition to any reductions in payment (set-offs) recommended by Engineer, Owner is entitled to impose a set-off against payment based on any of the following:

a. Claims have been made against Owner based on Contractor's conduct in the performance or furnishing of the Work, or Owner has incurred costs, losses, or damages resulting from Contractor's conduct in the performance or furnishing of the Work, including but not limited to claims, costs, losses, or damages from workplace injuries, adjacent property damage, non-compliance with Laws and Regulations, and patent infringement;

b. Contractor has failed to take reasonable and customary measures to avoid damage, delay, disruption, and interference with other work at or adjacent to the Site;

c. Contractor has failed to provide and maintain required bonds or insurance;

d. Owner has been required to remove or remediate a Hazardous Environmental Condition for which Contractor is responsible;

e. Owner has incurred extra charges or engineering costs related to submittal reviews, evaluations of proposed substitutes, tests and inspections, or return visits to manufacturing or assembly facilities;

f. The Work is defective, requiring correction or replacement;

g. Owner has been required to correct defective Work in accordance with Paragraph 14.07, or has accepted defective Work pursuant to Paragraph 14.04;

h. The Contract Price has been reduced by Change Orders;

i. An event has occurred that would constitute a default by Contractor and therefore justify a termination for cause;

j. Liquidated or other damages have accrued as a result of Contractor's failure to achieve Milestones, Substantial Completion, or final completion of the Work;

k. Liens have been filed in connection with the Work, except where Contractor has delivered a specific bond satisfactory to Owner to secure the satisfaction and discharge of such Liens; or

l. Other items entitle Owner to a set-off against the amount recommended.

2. If Owner imposes any set-off against payment, whether based on its own knowledge or on the written recommendations of Engineer, Owner will give Contractor immediate written notice (with a copy to Engineer) stating the reasons for such action and the specific amount of the reduction, and promptly pay Contractor any amount remaining

Copyright© 2018 National Society of Professional Engineers, American Council of Engineering Companies, and American Society of Civil Engineers. All rights reserved.

after deduction of the amount so withheld. Owner shall promptly pay Contractor the amount so withheld, or any adjustment thereto agreed to by Owner and Contractor, if Contractor remedies the reasons for such action. The reduction imposed will be binding on Contractor unless it duly submits a Change Proposal contesting the reduction.

3. Upon a subsequent determination that Owner's refusal of payment was not justified, the amount wrongfully withheld will be treated as an amount due as determined by Paragraph 15.01.D.1 and subject to interest as provided in the Agreement.

15.02 *Contractor's Warranty of Title*

A. Contractor warrants and guarantees that title to all Work, materials, and equipment furnished under the Contract will pass to Owner free and clear of (1) all Liens and other title defects, and (2) all patent, licensing, copyright, or royalty obligations, no later than 7 days after the time of payment by Owner.

15.03 *Substantial Completion*

A. When Contractor considers the entire Work ready for its intended use Contractor shall notify Owner and Engineer in writing that the entire Work is substantially complete and request that Engineer issue a certificate of Substantial Completion. Contractor shall at the same time submit to Owner and Engineer an initial draft of punch list items to be completed or corrected before final payment.

B. Promptly after Contractor's notification, Owner, Contractor, and Engineer shall make an inspection of the Work to determine the status of completion. If Engineer does not consider the Work substantially complete, Engineer will notify Contractor in writing giving the reasons therefor.

C. If Engineer considers the Work substantially complete, Engineer will deliver to Owner a preliminary certificate of Substantial Completion which will fix the date of Substantial Completion. Engineer shall attach to the certificate a punch list of items to be completed or corrected before final payment. Owner shall have 7 days after receipt of the preliminary certificate during which to make written objection to Engineer as to any provisions of the certificate or attached punch list. If, after considering the objections to the provisions of the preliminary certificate, Engineer concludes that the Work is not substantially complete, Engineer will, within 14 days after submission of the preliminary certificate to Owner, notify Contractor in writing that the Work is not substantially complete, stating the reasons therefor. If Owner does not object to the provisions of the certificate, or if despite consideration of Owner's objections Engineer concludes that the Work is substantially complete, then Engineer will, within said 14 days, execute and deliver to Owner and Contractor a final certificate of Substantial Completion (with a revised punch list of items to be completed or corrected) reflecting such changes from the preliminary certificate as Engineer believes justified after consideration of any objections from Owner.

D. At the time of receipt of the preliminary certificate of Substantial Completion, Owner and Contractor will confer regarding Owner's use or occupancy of the Work following Substantial Completion, review the builder's risk insurance policy with respect to the end of the builder's risk coverage, and confirm the transition to coverage of the Work under a permanent property insurance policy held by Owner. Unless Owner and Contractor agree otherwise in writing, Owner shall bear responsibility for security, operation, protection of the Work,

Copyright© 2018 National Society of Professional Engineers, American Council of Engineering Companies, and American Society of Civil Engineers. All rights reserved.

property insurance, maintenance, heat, and utilities upon Owner's use or occupancy of the Work.

E. After Substantial Completion the Contractor shall promptly begin work on the punch list of items to be completed or corrected prior to final payment. In appropriate cases Contractor may submit monthly Applications for Payment for completed punch list items, following the progress payment procedures set forth above.

F. Owner shall have the right to exclude Contractor from the Site after the date of Substantial Completion subject to allowing Contractor reasonable access to remove its property and complete or correct items on the punch list.

15.04 *Partial Use or Occupancy*

A. Prior to Substantial Completion of all the Work, Owner may use or occupy any substantially completed part of the Work which has specifically been identified in the Contract Documents, or which Owner, Engineer, and Contractor agree constitutes a separately functioning and usable part of the Work that can be used by Owner for its intended purpose without significant interference with Contractor's performance of the remainder of the Work, subject to the following conditions:

1. At any time, Owner may request in writing that Contractor permit Owner to use or occupy any such part of the Work that Owner believes to be substantially complete. If and when Contractor agrees that such part of the Work is substantially complete, Contractor, Owner, and Engineer will follow the procedures of Paragraph 15.03.A through 15.03.E for that part of the Work.

2. At any time, Contractor may notify Owner and Engineer in writing that Contractor considers any such part of the Work substantially complete and request Engineer to issue a certificate of Substantial Completion for that part of the Work.

3. Within a reasonable time after either such request, Owner, Contractor, and Engineer shall make an inspection of that part of the Work to determine its status of completion. If Engineer does not consider that part of the Work to be substantially complete, Engineer will notify Owner and Contractor in writing giving the reasons therefor. If Engineer considers that part of the Work to be substantially complete, the provisions of Paragraph 15.03 will apply with respect to certification of Substantial Completion of that part of the Work and the division of responsibility in respect thereof and access thereto.

4. No use or occupancy or separate operation of part of the Work may occur prior to compliance with the requirements of Paragraph 6.04 regarding builder's risk or other property insurance.

15.05 *Final Inspection*

A. Upon written notice from Contractor that the entire Work or an agreed portion thereof is complete, Engineer will promptly make a final inspection with Owner and Contractor and will notify Contractor in writing of all particulars in which this inspection reveals that the Work, or agreed portion thereof, is incomplete or defective. Contractor shall immediately take such measures as are necessary to complete such Work or remedy such deficiencies.

Copyright© 2018 National Society of Professional Engineers, American Council of Engineering Companies, and American Society of Civil Engineers. All rights reserved.

15.06 *Final Payment*

A. *Application for Payment*

1. After Contractor has, in the opinion of Engineer, satisfactorily completed all corrections identified during the final inspection and has delivered, in accordance with the Contract Documents, all maintenance and operating instructions, schedules, guarantees, bonds, certificates or other evidence of insurance, certificates of inspection, annotated record documents (as provided in Paragraph 7.12), and other documents, Contractor may make application for final payment.

2. The final Application for Payment must be accompanied (except as previously delivered) by:

   a. all documentation called for in the Contract Documents;

   b. consent of the surety, if any, to final payment;

   c. satisfactory evidence that all title issues have been resolved such that title to all Work, materials, and equipment has passed to Owner free and clear of any Liens or other title defects, or will so pass upon final payment.

   d. a list of all duly pending Change Proposals and Claims; and

   e. complete and legally effective releases or waivers (satisfactory to Owner) of all Lien rights arising out of the Work, and of Liens filed in connection with the Work.

3. In lieu of the releases or waivers of Liens specified in Paragraph 15.06.A.2 and as approved by Owner, Contractor may furnish receipts or releases in full and an affidavit of Contractor that: (a) the releases and receipts include all labor, services, material, and equipment for which a Lien could be filed; and (b) all payrolls, material and equipment bills, and other indebtedness connected with the Work for which Owner might in any way be responsible, or which might in any way result in liens or other burdens on Owner's property, have been paid or otherwise satisfied. If any Subcontractor or Supplier fails to furnish such a release or receipt in full, Contractor may furnish a bond or other collateral satisfactory to Owner to indemnify Owner against any Lien, or Owner at its option may issue joint checks payable to Contractor and specified Subcontractors and Suppliers.

B. *Engineer's Review of Final Application and Recommendation of Payment*: If, on the basis of Engineer's observation of the Work during construction and final inspection, and Engineer's review of the final Application for Payment and accompanying documentation as required by the Contract Documents, Engineer is satisfied that the Work has been completed and Contractor's other obligations under the Contract have been fulfilled, Engineer will, within 10 days after receipt of the final Application for Payment, indicate in writing Engineer's recommendation of final payment and present the final Application for Payment to Owner for payment. Such recommendation will account for any set-offs against payment that are necessary in Engineer's opinion to protect Owner from loss for the reasons stated above with respect to progress payments. Otherwise, Engineer will return the Application for Payment to Contractor, indicating in writing the reasons for refusing to recommend final payment, in which case Contractor shall make the necessary corrections and resubmit the Application for Payment.

C. *Notice of Acceptability*: In support of its recommendation of payment of the final Application for Payment, Engineer will also give written notice to Owner and Contractor that the Work is

Copyright© 2018 National Society of Professional Engineers, American Council of Engineering Companies, and American Society of Civil Engineers. All rights reserved.

acceptable, subject to stated limitations in the notice and to the provisions of Paragraph 15.07.

D. *Completion of Work*: The Work is complete (subject to surviving obligations) when it is ready for final payment as established by the Engineer's written recommendation of final payment and issuance of notice of the acceptability of the Work.

E. *Final Payment Becomes Due*: Upon receipt from Engineer of the final Application for Payment and accompanying documentation, Owner shall set off against the amount recommended by Engineer for final payment any further sum to which Owner is entitled, including but not limited to set-offs for liquidated damages and set-offs allowed under the provisions of this Contract with respect to progress payments. Owner shall pay the resulting balance due to Contractor within 30 days of Owner's receipt of the final Application for Payment from Engineer.

15.07 *Waiver of Claims*

A. By making final payment, Owner waives its claim or right to liquidated damages or other damages for late completion by Contractor, except as set forth in an outstanding Claim, appeal under the provisions of Article 17, set-off, or express reservation of rights by Owner. Owner reserves all other claims or rights after final payment.

B. The acceptance of final payment by Contractor will constitute a waiver by Contractor of all claims and rights against Owner other than those pending matters that have been duly submitted as a Claim, or appealed under the provisions of Article 17.

15.08 *Correction Period*

A. If within one year after the date of Substantial Completion (or such longer period of time as may be prescribed by the Supplementary Conditions or the terms of any applicable special guarantee required by the Contract Documents), Owner gives Contractor written notice that any Work has been found to be defective, or that Contractor's repair of any damages to the Site or adjacent areas has been found to be defective, then after receipt of such notice of defect Contractor shall promptly, without cost to Owner and in accordance with Owner's written instructions:

1. correct the defective repairs to the Site or such adjacent areas;

2. correct such defective Work;

3. remove the defective Work from the Project and replace it with Work that is not defective, if the defective Work has been rejected by Owner, and

4. satisfactorily correct or repair or remove and replace any damage to other Work, to the work of others, or to other land or areas resulting from the corrective measures.

B. Owner shall give any such notice of defect within 60 days of the discovery that such Work or repairs is defective. If such notice is given within such 60 days but after the end of the correction period, the notice will be deemed a notice of defective Work under Paragraph 7.17.B.

C. If, after receipt of a notice of defect within 60 days and within the correction period, Contractor does not promptly comply with the terms of Owner's written instructions, or in an emergency where delay would cause serious risk of loss or damage, Owner may have the defective Work corrected or repaired or may have the rejected Work removed and replaced.

Copyright© 2018 National Society of Professional Engineers, American Council of Engineering Companies, and American Society of Civil Engineers. All rights reserved.

Contractor shall pay all costs, losses, and damages (including but not limited to all fees and charges of engineers, architects, attorneys, and other professionals and all court or arbitration or other dispute resolution costs) arising out of or relating to such correction or repair or such removal and replacement (including but not limited to all costs of repair or replacement of work of others). Contractor's failure to pay such costs, losses, and damages within 10 days of invoice from Owner will be deemed the start of an event giving rise to a Claim under Paragraph 12.01.B, such that any related Claim must be brought within 30 days of the failure to pay.

D. In special circumstances where a particular item of equipment is placed in continuous service before Substantial Completion of all the Work, the correction period for that item may start to run from an earlier date if so provided in the Specifications.

E. Where defective Work (and damage to other Work resulting therefrom) has been corrected or removed and replaced under this paragraph, the correction period hereunder with respect to such Work will be extended for an additional period of one year after such correction or removal and replacement has been satisfactorily completed.

F. Contractor's obligations under this paragraph are in addition to all other obligations and warranties. The provisions of this paragraph are not to be construed as a substitute for, or a waiver of, the provisions of any applicable statute of limitation or repose.

ARTICLE 16—SUSPENSION OF WORK AND TERMINATION

16.01 *Owner May Suspend Work*

A. At any time and without cause, Owner may suspend the Work or any portion thereof for a period of not more than 90 consecutive days by written notice to Contractor and Engineer. Such notice will fix the date on which Work will be resumed. Contractor shall resume the Work on the date so fixed. Contractor shall be entitled to an adjustment in the Contract Price or an extension of the Contract Times directly attributable to any such suspension. Any Change Proposal seeking such adjustments must be submitted no later than 30 days after the date fixed for resumption of Work.

16.02 *Owner May Terminate for Cause*

A. The occurrence of any one or more of the following events will constitute a default by Contractor and justify termination for cause:

1. Contractor's persistent failure to perform the Work in accordance with the Contract Documents (including, but not limited to, failure to supply sufficient skilled workers or suitable materials or equipment, or failure to adhere to the Progress Schedule);

2. Failure of Contractor to perform or otherwise to comply with a material term of the Contract Documents;

3. Contractor's disregard of Laws or Regulations of any public body having jurisdiction; or

4. Contractor's repeated disregard of the authority of Owner or Engineer.

Copyright© 2018 National Society of Professional Engineers, American Council of Engineering Companies, and American Society of Civil Engineers. All rights reserved.

B. If one or more of the events identified in Paragraph 16.02.A occurs, then after giving Contractor (and any surety) 10 days' written notice that Owner is considering a declaration that Contractor is in default and termination of the Contract, Owner may proceed to:

1. declare Contractor to be in default, and give Contractor (and any surety) written notice that the Contract is terminated; and

2. enforce the rights available to Owner under any applicable performance bond.

C. Subject to the terms and operation of any applicable performance bond, if Owner has terminated the Contract for cause, Owner may exclude Contractor from the Site, take possession of the Work, incorporate in the Work all materials and equipment stored at the Site or for which Owner has paid Contractor but which are stored elsewhere, and complete the Work as Owner may deem expedient.

D. Owner may not proceed with termination of the Contract under Paragraph 16.02.B if Contractor within 7 days of receipt of notice of intent to terminate begins to correct its failure to perform and proceeds diligently to cure such failure.

E. If Owner proceeds as provided in Paragraph 16.02.B, Contractor shall not be entitled to receive any further payment until the Work is completed. If the unpaid balance of the Contract Price exceeds the cost to complete the Work, including all related claims, costs, losses, and damages (including but not limited to all fees and charges of engineers, architects, attorneys, and other professionals) sustained by Owner, such excess will be paid to Contractor. If the cost to complete the Work including such related claims, costs, losses, and damages exceeds such unpaid balance, Contractor shall pay the difference to Owner. Such claims, costs, losses, and damages incurred by Owner will be reviewed by Engineer as to their reasonableness and, when so approved by Engineer, incorporated in a Change Order. When exercising any rights or remedies under this paragraph, Owner shall not be required to obtain the lowest price for the Work performed.

F. Where Contractor's services have been so terminated by Owner, the termination will not affect any rights or remedies of Owner against Contractor then existing or which may thereafter accrue, or any rights or remedies of Owner against Contractor or any surety under any payment bond or performance bond. Any retention or payment of money due Contractor by Owner will not release Contractor from liability.

G. If and to the extent that Contractor has provided a performance bond under the provisions of Paragraph 6.01.A, the provisions of that bond will govern over any inconsistent provisions of Paragraphs 16.02.B and 16.02.D.

16.03 *Owner May Terminate for Convenience*

A. Upon 7 days' written notice to Contractor and Engineer, Owner may, without cause and without prejudice to any other right or remedy of Owner, terminate the Contract. In such case, Contractor shall be paid for (without duplication of any items):

1. completed and acceptable Work executed in accordance with the Contract Documents prior to the effective date of termination, including fair and reasonable sums for overhead and profit on such Work;

2. expenses sustained prior to the effective date of termination in performing services and furnishing labor, materials, or equipment as required by the Contract Documents in

Copyright© 2018 National Society of Professional Engineers, American Council of Engineering Companies, and American Society of Civil Engineers. All rights reserved.

connection with uncompleted Work, plus fair and reasonable sums for overhead and profit on such expenses; and

3. other reasonable expenses directly attributable to termination, including costs incurred to prepare a termination for convenience cost proposal.

B. Contractor shall not be paid for any loss of anticipated profits or revenue, post-termination overhead costs, or other economic loss arising out of or resulting from such termination.

16.04 *Contractor May Stop Work or Terminate*

A. If, through no act or fault of Contractor, (1) the Work is suspended for more than 90 consecutive days by Owner or under an order of court or other public authority, or (2) Engineer fails to act on any Application for Payment within 30 days after it is submitted, or (3) Owner fails for 30 days to pay Contractor any sum finally determined to be due, then Contractor may, upon 7 days' written notice to Owner and Engineer, and provided Owner or Engineer do not remedy such suspension or failure within that time, terminate the contract and recover from Owner payment on the same terms as provided in Paragraph 16.03.

B. In lieu of terminating the Contract and without prejudice to any other right or remedy, if Engineer has failed to act on an Application for Payment within 30 days after it is submitted, or Owner has failed for 30 days to pay Contractor any sum finally determined to be due, Contractor may, 7 days after written notice to Owner and Engineer, stop the Work until payment is made of all such amounts due Contractor, including interest thereon. The provisions of this paragraph are not intended to preclude Contractor from submitting a Change Proposal for an adjustment in Contract Price or Contract Times or otherwise for expenses or damage directly attributable to Contractor's stopping the Work as permitted by this paragraph.

ARTICLE 17—FINAL RESOLUTION OF DISPUTES

17.01 *Methods and Procedures*

A. *Disputes Subject to Final Resolution*: The following disputed matters are subject to final resolution under the provisions of this article:

1. A timely appeal of an approval in part and denial in part of a Claim, or of a denial in full, pursuant to Article 12; and

2. Disputes between Owner and Contractor concerning the Work, or obligations under the Contract Documents, that arise after final payment has been made.

B. *Final Resolution of Disputes*: For any dispute subject to resolution under this article, Owner or Contractor may:

1. elect in writing to invoke the dispute resolution process provided for in the Supplementary Conditions;

2. agree with the other party to submit the dispute to another dispute resolution process; or

3. if no dispute resolution process is provided for in the Supplementary Conditions or mutually agreed to, give written notice to the other party of the intent to submit the dispute to a court of competent jurisdiction.

Copyright© 2018 National Society of Professional Engineers, American Council of Engineering Companies, and American Society of Civil Engineers. All rights reserved.

ARTICLE 18—MISCELLANEOUS

18.01 *Giving Notice*

A. Whenever any provision of the Contract requires the giving of written notice to Owner, Engineer, or Contractor, it will be deemed to have been validly given only if delivered:

1. in person, by a commercial courier service or otherwise, to the recipient's place of business;

2. by registered or certified mail, postage prepaid, to the recipient's place of business; or

3. by e-mail to the recipient, with the words "Formal Notice" or similar in the e-mail's subject line.

18.02 *Computation of Times*

A. When any period of time is referred to in the Contract by days, it will be computed to exclude the first and include the last day of such period. If the last day of any such period falls on a Saturday or Sunday or on a day made a legal holiday by the law of the applicable jurisdiction, such day will be omitted from the computation.

18.03 *Cumulative Remedies*

A. The duties and obligations imposed by these General Conditions and the rights and remedies available hereunder to the parties hereto are in addition to, and are not to be construed in any way as a limitation of, any rights and remedies available to any or all of them which are otherwise imposed or available by Laws or Regulations, by special warranty or guarantee, or by other provisions of the Contract. The provisions of this paragraph will be as effective as if repeated specifically in the Contract Documents in connection with each particular duty, obligation, right, and remedy to which they apply.

18.04 *Limitation of Damages*

A. With respect to any and all Change Proposals, Claims, disputes subject to final resolution, and other matters at issue, neither Owner nor Engineer, nor any of their officers, directors, members, partners, employees, agents, consultants, or subcontractors, shall be liable to Contractor for any claims, costs, losses, or damages sustained by Contractor on or in connection with any other project or anticipated project.

18.05 *No Waiver*

A. A party's non-enforcement of any provision will not constitute a waiver of that provision, nor will it affect the enforceability of that provision or of the remainder of this Contract.

18.06 *Survival of Obligations*

A. All representations, indemnifications, warranties, and guarantees made in, required by, or given in accordance with the Contract, as well as all continuing obligations indicated in the Contract, will survive final payment, completion, and acceptance of the Work or termination of the Contract or of the services of Contractor.

18.07 *Controlling Law*

A. This Contract is to be governed by the law of the state in which the Project is located.

Copyright© 2018 National Society of Professional Engineers, American Council of Engineering Companies, and American Society of Civil Engineers. All rights reserved.

18.08 *Assignment of Contract*

A. Unless expressly agreed to elsewhere in the Contract, no assignment by a party to this Contract of any rights under or interests in the Contract will be binding on the other party without the written consent of the party sought to be bound; and, specifically but without limitation, money that may become due and money that is due may not be assigned without such consent (except to the extent that the effect of this restriction may be limited by law), and unless specifically stated to the contrary in any written consent to an assignment, no assignment will release or discharge the assignor from any duty or responsibility under the Contract.

18.09 *Successors and Assigns*

A. Owner and Contractor each binds itself, its successors, assigns, and legal representatives to the other party hereto, its successors, assigns, and legal representatives in respect to all covenants, agreements, and obligations contained in the Contract Documents.

18.10 *Headings*

A. Article and paragraph headings are inserted for convenience only and do not constitute parts of these General Conditions.

EJCDC® C-700, Standard General Conditions of the Construction Contract.
Copyright© 2018 National Society of Professional Engineers, American Council of Engineering Companies, and American Society of Civil Engineers. All rights reserved.

SUPPLEMENTARY CONDITIONS OF THE CONSTRUCTION CONTRACT

TABLE OF CONTENTS

Page

Article 1— Definitions and Terminology 1
Article 2— Preliminary Matters 5
Article 3— Contract Documents: Intent, Requirements, Reuse 9
Article 4— Commencement and Progress of the Work 9
Article 5— Site, Subsurface and Physical Conditions, Hazardous Environmental Conditions 10
Article 6— Bonds and Insurance 10
Article 7— Contractor's Responsibilities 14
Article 8— Other Work at the Site 16
Article 9— Owner's Responsibilities 16
Article 10— Engineer's Status During Construction 17
Article 11— Changes to the Contract 18
Article 12— Claims 19
Article 13— Cost of Work; Allowances, Unit Price Work 19
Article 14— Tests and Inspections; Correction, Removal, or Accceptance of Defective Work 19
Article 15— Payments to Contractor, Set Offs; Completions; Correction Period 19
Article 16— Suspension of Work and Termination 21
Article 17— Final Resolutions of Disputes 21
Article 18— Miscellaneous 23
Article 19— Federal Requirements 23
Article 20— State requirements 28
Exhibit A— Software Requirements for Electronic Document Exchange 1
Exhibit B— Foreseeable Bad Weather Days 1

EJCDC® C-800, Supplementary Conditions of the Construction Contract.
Copyright© 2018 National Society of Professional Engineers, American Council of Engineering Companies, and American Society of Civil Engineers. All rights reserved.

SUPPLEMENTARY CONDITIONS OF THE CONSTRUCTION CONTRACT

These Supplementary Conditions amend or supplement EJCDC® C-700, Standard General Conditions of the Construction Contract (2018). The General Conditions remain in full force and effect except as amended.

The terms used in these Supplementary Conditions have the meanings stated in the General Conditions. Additional terms used in these Supplementary Conditions have the meanings stated below, which are applicable to both the singular and plural thereof.

The address system used in these Supplementary Conditions is the same as the address system used in the General Conditions, with the prefix "SC" added—for example, "Paragraph SC-4.05."

ARTICLE 1— DEFINITIONS AND TERMINOLOGY

1.01 *Defined Terms*

SC-1.01.A.8 Add the following at the end of the Paragraph:

The Change Order form to be used on this Project is EJCDC C-941 (2018). Agency approval is required before Change Orders are effective.

SC-1.01.A.30 Add the following at the end of the Paragraph:

For the purposes of Rural Development, this term is synonymous with the term "applicant" as defined in 7 CFR 1780.7 (a) (1), (2) and (3) and is an entity receiving financial assistance from the federal programs. Refers to Owner's officials, officers, agents and employees.

SC-1.01.A.50 Add the following at the end of the Paragraph:

The Work Change Directive form to be used on this Project is EJCDC C-940 (2018). Agency approval is required before a Work Change Directive is issued.

SC-1.01.A.51 Add the following new paragraph immediately after Paragraph 1.01.A.50:

51. Agency - The Project is financed in whole or in part by USDA Rural Utilities Service pursuant to the Consolidated Farm and Rural Development Act (7 USC Section 1921 et seq.). The Rural Utilities Service programs are administered through the USDA Rural Development offices; therefore, the Agency for these documents is USDA Rural Development.

SC-1.01.A.52 Add the following new paragraph with the title "American Iron and Steel Definitions" immediately after Paragraph 1.01.A.51:

52. *American Iron and Steel Definitions*

a. *American Iron and Steel (AIS)* - Requirements mandated by Section 746 of Title VII of the Consolidated Appropriations Act of 2017 (Division A - Agriculture, Rural Development, Food and Drug Administration, and Related Agencies Appropriations Act, 2017) and subsequent statutes mandating domestic preference for "iron and steel products," meaning the following products, if made primarily of iron or steel: lined or unlined pipes and fittings, manhole covers and other municipal castings, hydrants, tanks, flanges, pipe clamps and

Copyright© 2018 National Society of Professional Engineers, American Council of Engineering Companies, and American Society of Civil Engineers. All rights reserved.

restraints, valves, structural steel, reinforced precast concrete, and Construction Materials. AIS requirements apply in each of the several states, the District of Columbia, and each federally recognized Tribe, but not the U.S. Territories.

b. *Coating* - A covering that is applied to the surface of an object. If a Coating is applied to the external surface of a domestic iron or Steel component, and the application takes place outside of the United States, said product would be considered a compliant product under the AIS requirements. Any Coating processes that are applied to the external surface of Iron and Steel components that would otherwise be AIS compliant would not disqualify the product from meeting the AIS requirements regardless of where the Coating processes occur, provided that final assembly of the product occurs in the United States. This exemption only applies to Coatings on the external surface of Iron and Steel components. It does not apply to Coatings or linings on internal surfaces of Iron and Steel products, such as the lining of lined pipes. All Manufacturing Processes for lined pipes, including the application of pipe lining, must occur in the United States for the product to be compliant with AIS requirements.

c. *Construction Materials* - Those articles, materials, or supplies made primarily of iron and/or steel, that are permanently incorporated into the project, not including mechanical and/or electrical components, equipment and systems. Some of these products may overlap with what is also considered "structural steel". Note: Mechanical and electrical components, equipment and systems are not considered Construction Materials. See definitions of Mechanical Equipment and Electrical Equipment.

d. *Contractor's Certification* - Documentation submitted by the Contractor upon Substantial Completion of the Contract that all Iron and Steel products installed were Produced in the United States.

e. *De Minimis* - Various miscellaneous, incidental low-cost components that are essential for, but incidental to, the construction and are incorporated into the physical structure of the project. Examples of De Minimis components could include small washers, screws, fasteners (such as "off the shelf" nuts and bolts), miscellaneous wire, corner bead, ancillary tube, signage, trash bins, door hardware etc. Costs for such De Minimis components cumulatively may comprise no more than a total of five percent of the total cost of the materials used in and incorporated into a project; the cost of an individual item may not exceed one percent of the total cost of the materials used in and incorporated into a project.

f. *Electrical Equipment* - Typically any machine powered by electricity and includes components that are part of the electrical distribution system. AIS does not apply to Electrical Equipment.

g. *Engineer's Certification* - Documentation submitted by the Engineer that Drawings, Specifications, and Bidding Documents comply with AIS.

h. *Iron and Steel products* - The following products made primarily of iron or steel: lined or unlined pipes and fittings, manhole covers and other municipal castings, hydrants, tanks, flanges, pipe clamps and restraints, valves, structural steel, reinforced precast concrete, and Construction Materials. Only items on the above

Copyright© 2018 National Society of Professional Engineers, American Council of Engineering Companies, and American Society of Civil Engineers. All rights reserved.

list made primarily of iron or steel, permanently incorporated into the project must be Produced in the United States. For example, trench boxes, scaffolding or equipment, which are removed from the project site upon completion of the project, are not required to be made of U.S. iron or steel.

i. ***Manufacturer*** **- A Supplier, fabricator, distributor, materialman, or vendor is an entity with which the Owner, Contractor or any subcontractor has contracted to furnish materials or equipment to be incorporated in the project by the Owner, Contractor or a subcontractor.**

j. ***Manufacturer's Certification*** **- Documentation provided by the Manufacturer stating that the Iron and Steel products to be used in the project are produced in the United States in accordance with American Iron and Steel (AIS) Requirements. If items are purchased via a Supplier, distributor, vendor, etc. from the Manufacturer directly, then the Supplier, distributor, vendor, etc. will be responsible for obtaining and providing these certifications to the parties purchasing the products.**

k. ***Manufacturing Processes*** **- Processes such as melting, refining, pouring, forming, rolling, drawing, finishing, and fabricating. Further, if a domestic Iron and Steel product is taken out of the United States for any part of the manufacturing process, it becomes foreign source material. However, raw materials such as iron ore, limestone and iron and steel scrap are not covered by the AIS requirement, and the material(s), if any, being applied as a Coating are similarly not covered. Non-iron or Steel components of an Iron and Steel product may come from non-US sources. For example, for products such as valves and hydrants, the individual non-Iron and Steel components do not have to be of domestic origin. Raw materials, such as iron ore, limestone, scrap iron, and scrap steel, can come from non-U.S. sources.**

l. ***Mechanical Equipment*** **- Typically equipment which has motorized parts and/or is powered by a motor. AIS does not apply to Mechanical Equipment.**

m. ***Minor Components*** **- Components within an iron and/or Steel product otherwise compliant with the American Iron and Steel requirements; this waiver is typically used by Manufacturers. It differs from the De Minimis definition in that De Minimis pertains to the entire project and the minor component definition pertains to a single product. This waiver allows use of non-domestically produced miscellaneous Minor Components comprising up to five percent of the total material cost of an otherwise domestically produced Iron and Steel product. However, unless a separate waiver for a product has been approved, all other Iron and Steel components in said product must still meet the AIS requirements. This waiver does not exempt the whole product from the AIS requirements only Minor Components within said product and the iron or Steel components of the product must be produced domestically. Valves and hydrants are also subject to the cost ceiling requirements described here. Examples of Minor Components could include items such as pins and springs in valves/hydrants, bands/straps in couplings, and other low-cost items such as small fasteners etc.**

n. ***Municipal Castings*** **- Cast iron or Steel infrastructure products that are melted and cast. They typically provide access, protection, or housing for components**

Copyright© 2018 National Society of Professional Engineers, American Council of Engineering Companies, and American Society of Civil Engineers. All rights reserved.

incorporated into utility owned drinking water, storm water, wastewater, and solid waste infrastructure.

o. ***Primarily Iron or Steel*** **- A product is made of greater than 50 percent iron or Steel on a materials cost basis. An exception to this definition is reinforced precast concrete (see Definitions). All technical specifications and applicable industry standards (e.g. NIST, NSF, AWWA) must be met. If a product is determined to be less than 50 percent iron and/or steel, the AIS requirements do not apply. For example, the cost of a fire hydrant includes:**

- **The cost of materials used for the iron portion of a fire hydrant (e.g. bonnet, body and shoe); and**
- **The cost to pour and cast to create those components (e.g. labor and energy).**

Not included in the cost are:

- **The additional material costs for the non-iron or Steel internal workings of the hydrant (e.g. stem, coupling, valve, seals, etc.); and**
- **The cost to assemble the internal workings into the hydrant body.**

p. ***Produced in the United States*** **- The production in the United States of the iron or Steel products used in the project requires that all Manufacturing Processes must take place in the United States, with the exception of metallurgical processes involving refinement of steel additives.**

q. ***Reinforced Precast Concrete*** **– Reinforced Precast Concrete structures must comply with AIS, regardless of whether it consists of at least 50 percent iron or steel. The reinforcing bar and wire must be Produced in the United States and meet the same standards as for any other iron or Steel product. Additionally, the casting of the concrete product must take place in the United States. The cement and other raw materials used in concrete production are not required to be of domestic origin. If the reinforced concrete is cast at the construction site, the reinforcing bar and wire are considered Construction Materials and must be Produced in the United States.**

r. ***Steel*** **- An alloy that includes at least 50 percent iron, between 0.02 and 2 percent carbon, and may include other elements. Metallic elements such as chromium, nickel, molybdenum, manganese, and silicon may be added during the melting of Steel for the purpose of enhancing properties such as corrosion resistance, hardness, or strength. The definition of Steel covers carbon steel, alloy steel, stainless steel, tool steel, and other specialty steels.**

s. ***Structural Steel*** **- Rolled flanged shapes, having at least one dimension of their cross-section three inches or greater, which are used in the construction of bridges, buildings, ships, railroad rolling stock, and for numerous other constructional purposes. Such shapes are designated as wide-flange shapes, standard I-beams, channels, angles, tees, and zees. Other shapes include but are not limited to, H-piles, sheet piling, tie plates, cross ties, and those for other special purposes.**

Copyright© 2018 National Society of Professional Engineers, American Council of Engineering Companies, and American Society of Civil Engineers. All rights reserved.

ARTICLE 2— PRELIMINARY MATTERS

2.02 *Copies of Documents*

SC-2.02 Amend the first sentence of Paragraph 2.02.A. to read as follows:

Owner shall furnish to Contractor **five (5)** printed copies of the Contract Documents (including one fully signed counterpart of the Agreement), and **one (1) copy** in electronic portable document format (PDF).

2.06 *Electronic Transmittals*

SC-2.06 Delete Paragraphs 2.06.B and 2.06.C in their entirety and insert the following in their place:

B. *Electronic Documents Protocol:* The parties shall conform to the following provisions in Paragraphs 2.06.B and 2.06.C, together referred to as the Electronic Documents Protocol ("EDP" or "Protocol") for exchange of electronic transmittals.

1. *Basic Requirements*

a. To the fullest extent practical, the parties agree to and will transmit and accept Electronic Documents in an electronic or digital format using the procedures described in this Protocol. Use of the Electronic Documents and any information contained therein is subject to the requirements of this Protocol and other provisions of the Contract.

b. The contents of the information in any Electronic Document will be the responsibility of the transmitting party.

c. Electronic Documents as exchanged by this Protocol may be used in the same manner as the printed versions of the same documents that are exchanged using non-electronic format and methods, subject to the same governing requirements, limitations, and restrictions, set forth in the Contract Documents.

d. Except as otherwise explicitly stated herein, the terms of this Protocol will be incorporated into any other agreement or subcontract between a party and any third party for any portion of the Work on the Project, or any Project-related services, where that third party is, either directly or indirectly, required to exchange Electronic Documents with a party or with Engineer. Nothing herein will modify the requirements of the Contract regarding communications between and among the parties and their subcontractors and consultants.

e. When transmitting Electronic Documents, the transmitting party makes no representations as to long term compatibility, usability, or readability of the items resulting from the receiving party's use of software application packages, operating systems, or computer hardware differing from those established in this Protocol.

f. Nothing herein negates any obligation 1) in the Contract to create, provide, or maintain an original printed record version of Drawings and Specifications, signed and sealed according to applicable Laws and Regulations; 2) to comply with any applicable Law or Regulation governing the signing and sealing of design documents or the signing and electronic transmission of any other documents; or 3) to comply with the notice requirements of Paragraph 18.01 of the General Conditions.

Copyright© 2018 National Society of Professional Engineers, American Council of Engineering Companies, and American Society of Civil Engineers. All rights reserved.

2. *System Infrastructure for Electronic Document Exchange*

   a. Each party will provide hardware, operating system(s) software, internet, e-mail, and large file transfer functions ("System Infrastructure") at its own cost and sufficient for complying with the EDP requirements. With the exception of minimum standards set forth in this EDP, and any explicit system requirements specified by attachment to this EDP, it is the obligation of each party to determine, for itself, its own System Infrastructure.

      1) The maximum size of an email attachment for exchange of Electronic Documents under this EDP is **10** MB. Attachments larger than that may be exchanged using large file transfer functions or physical media.

      2) Each Party assumes full and complete responsibility for any and all of its own costs, delays, deficiencies, and errors associated with converting, translating, updating, verifying, licensing, or otherwise enabling its System Infrastructure, including operating systems and software, for use with respect to this EDP.

   b. Each party is responsible for its own system operations, security, back-up, archiving, audits, printing resources, and other Information Technology ("IT") for maintaining operations of its System Infrastructure during the Project, including coordination with the party's individual(s) or entity responsible for managing its System Infrastructure and capable of addressing routine communications and other IT issues affecting the exchange of Electronic Documents.

   c. Each party will operate and maintain industry-standard, industry-accepted, ISO-standard, commercial-grade security software and systems that are intended to protect the other party from: software viruses and other malicious software like worms, trojans, adware; data breaches; loss of confidentiality; and other threats in the transmission to or storage of information from the other parties, including transmission of Electronic Documents by physical media such as CD/DVD/flash drive/hard drive. To the extent that a party maintains and operates such security software and systems, it shall not be liable to the other party for any breach of system security.

   d. In the case of disputes, conflicts, or modifications to the EDP required to address issues affecting System Infrastructure, the parties shall cooperatively resolve the issues; but, failing resolution, the Owner is authorized to make and require reasonable and necessary changes to the EDP to effectuate its original intent. If the changes cause additional cost or time to Contractor, not reasonably anticipated under the original EDP, Contractor may seek an adjustment in price or time under the appropriate process in the Contract.

   e. Each party is responsible for its own back-up and archive of documents sent and received during the term of the contract under this EDP, unless this EDP establishes a Project document archive, either as part of a mandatory Project website or other communications protocol, upon which the parties may rely for document archiving during the specified term of operation of such Project document archive. Further, each party remains solely responsible for its own post-Project back-up and archive of Project documents after the term of the Contract, or after termination of the

Copyright© 2018 National Society of Professional Engineers, American Council of Engineering Companies, and American Society of Civil Engineers. All rights reserved.

Project document archive, if one is established, for as long as required by the Contract and as each party deems necessary for its own purposes.

f. If a receiving party receives an obviously corrupted, damaged, or unreadable Electronic Document, the receiving party will advise the sending party of the incomplete transmission.

g. The parties will bring any non-conforming Electronic Documents into compliance with the EDP. The parties will attempt to complete a successful transmission of the Electronic Document or use an alternative delivery method to complete the communication.

h. The Owner will operate a Project information management system (also referred to in this EDP as "Project Website") for use of Owner, Engineer and Contractor during the Project for exchange and storage of Project-related communications and information. Except as otherwise provided in this EDP or the General Conditions, use of the Project Website by the parties as described in this Paragraph will be mandatory for exchange of Project documents, communications, submittals, and other Project-related information. The following conditions and standards will govern use of the Project Website:

1) Describe the period of time during which the Project Website will be operated and be available for reliance by the parties;

2) Provide any minimum system infrastructure, software licensing and security standards for access to and use of the Project Website;

3) Describe the types and extent of services to be provided at the Project Website (such as large file transfer, email, communication and document archives, etc.); and

4) Include any other Project Website attributes that may be pertinent to Contractor's use of the facility and pricing of such use.

C. *Software Requirements for Electronic Document Exchange; Limitations*

1. Each party will acquire the software and software licenses necessary to create and transmit Electronic Documents and to read and to use any Electronic Documents received from the other party (and if relevant from third parties), using the software formats required in this section of the EDP.

a. Prior to using any updated version of the software required in this section for sending Electronic Documents to the other party, the originating party will first notify and receive concurrence from the other party for use of the updated version or adjust its transmission to comply with this EDP.

2. The parties agree not to intentionally edit, reverse engineer, decrypt, remove security or encryption features, or convert to another format for modification purposes any Electronic Document or information contained therein that was transmitted in a software data format, including Portable Document Format (PDF), intended by sender not to be modified, unless the receiving party obtains the permission of the sending party or is citing or quoting excerpts of the Electronic Document for Project purposes.

Copyright© 2018 National Society of Professional Engineers, American Council of Engineering Companies, and American Society of Civil Engineers. All rights reserved.

3. Software and data formats for exchange of Electronic Documents will conform to the requirements set forth in Exhibit A to this EDP, including software versions, if listed.

SC-2.06 Supplement Paragraph 2.06 of the General Conditions by adding the following paragraph:

D. *Requests by Contractor for Electronic Documents in Other Formats*

1. Release of any Electronic Document versions of the Project documents in formats other than those identified in the Electronic Documents Protocol (if any) or elsewhere in the Contract will be at the sole discretion of the Owner.

2. To extent determined by Owner, in its sole discretion, to be prudent and necessary, release of Electronic Documents versions of Project documents and other Project information requested by Contractor ("Request") in formats other than those identified in the Electronic Documents Protocol (if any) or elsewhere in the Contract will be subject to the provisions of the Owner's response to the Request, and to the following conditions to which Contractor agrees:

a. The content included in the Electronic Documents created by Engineer and covered by the Request was prepared by Engineer as an internal working document for Engineer's purposes solely, and is being provided to Contractor on an "AS IS" basis without any warranties of any kind, including, but not limited to any implied warranties of fitness for any purpose. As such, Contractor is advised and acknowledges that the content may not be suitable for Contractor's application, or may require substantial modification and independent verification by Contractor. The content may include limited resolution of models, not-to-scale schematic representations and symbols, use of notes to convey design concepts in lieu of accurate graphics, approximations, graphical simplifications, undocumented intermediate revisions, and other devices that may affect subsequent reuse.

b. Electronic Documents containing text, graphics, metadata, or other types of data that are provided by Engineer to Contractor under the request are only for convenience of Contractor. Any conclusion or information obtained or derived from such data will be at the Contractor's sole risk and the Contractor waives any claims against Engineer or Owner arising from use of data in Electronic Documents covered by the Request.

c. Contractor shall indemnify and hold harmless Owner and Engineer and their subconsultants from all claims, damages, losses, and expenses, including attorneys' fees and defense costs arising out of or resulting from Contractor's use, adaptation, or distribution of any Electronic Documents provided under the Request.

d. Contractor agrees not to sell, copy, transfer, forward, give away or otherwise distribute this information (in source or modified file format) to any third party without the direct written authorization of Engineer, unless such distribution is specifically identified in the Request and is limited to Contractor's subcontractors. Contractor warrants that subsequent use by Contractor's subcontractors complies with all terms of the Contract Documents and Owner's response to Request.

3. In the event that Owner elects to provide or directs the Engineer to provide to Contractor any Contractor-requested Electronic Document versions of Project information that is not explicitly identified in the Contract Documents as being available to Contractor, the Owner shall be reimbursed by Contractor on an hourly basis (at $**120**

Copyright© 2018 National Society of Professional Engineers, American Council of Engineering Companies, and American Society of Civil Engineers. All rights reserved.

per hour) for any engineering costs necessary to create or otherwise prepare the data in a manner deemed appropriate by Engineer.

ARTICLE 3— CONTRACT DOCUMENTS: INTENT, REQUIREMENTS, REUSE

No suggested Supplementary Conditions in this Article.

ARTICLE 4— COMMENCEMENT AND PROGRESS OF THE WORK

4.01 *Commencement of Contract Times; Notice to Proceed*

SC-4.01.A Delete the last sentence of paragraph.

4.05 *Delays in Contractor's Progress*

SC-4.05 Amend Paragraph 4.05.C by adding the following subparagraphs:

5. *Weather-Related Delays*

a. If "abnormal weather conditions" as set forth in Paragraph 4.05.C.2 of the General Conditions are the basis for a request for an equitable adjustment in the Contract Times, such request must be documented by data substantiating each of the following: 1) that weather conditions were abnormal for the period of time in which the delay occurred, 2) that such weather conditions could not have been reasonably anticipated, and 3) that such weather conditions had an adverse effect on the Work as scheduled. **Extreme or unusual weather that is typical for a given region, elevation, or season should not be considered abnormal weather conditions. Requests for time extensions due to abnormal weather conditions will be submitted to the Engineer within five days of the end of the abnormal weather condition event. It is the responsibility of the Contractor to provide the information listed in SC 4.05.C.5.b.**

b. The existence of abnormal weather conditions will be determined on a month-by-month basis in accordance with the following:

1) Every workday on which one or more of the following conditions exist will be considered a "bad weather day":

i) Total precipitation (as rain equivalent) occurring between 7:00 p.m. on the preceding day (regardless of whether such preceding day is a workday) through 7:00 p.m. on the workday in question equals or exceeds **1"** of precipitation (as rain equivalent, based on the snow/rain conversion indicated in the table entitled Foreseeable Bad Weather Days; such table is hereby incorporated in this SC-4.05.C by reference.

ii) Ambient outdoor air temperature at 11:00 a.m. is equal to or less than the following low temperature threshold: **35** degrees Fahrenheit; or, at 3:00 p.m. the ambient outdoor temperature is equal to or greater than the following high temperature threshold: **115** degrees Fahrenheit.

2) Determination of actual bad weather days during performance of the Work will be based on the weather records measured and recorded **at or near Yavapai County.**

Copyright© 2018 National Society of Professional Engineers, American Council of Engineering Companies, and American Society of Civil Engineers. All rights reserved.

3) Contractor shall anticipate the number of foreseeable bad weather days per month indicated in the table in Exhibit **B**—Foreseeable Bad Weather Days.

4) In each month, every bad weather day exceeding the number of foreseeable bad weather days established in the table in Exhibit **B**—Foreseeable Bad Weather Days will be considered as "abnormal weather conditions." The existence of abnormal weather conditions will not relieve Contractor of the obligation to demonstrate and document that delays caused by abnormal weather are specific to the planned work activities or that such activities thus delayed were on Contractor's then-current Progress Schedule's critical path for the Project.

ARTICLE 5— SITE, SUBSURFACE AND PHYSICAL CONDITIONS, HAZARDOUS ENVIRONMENTAL CONDITIONS

5.03 *Subsurface and Physical Conditions*

SC-5.03 Add the following new paragraphs immediately after Paragraph 5.03.D:

E. The following table lists the reports of explorations and tests of subsurface conditions at or adjacent to the Site that contain Technical Data, and specifically identifies the Technical Data in the report upon which Contractor may rely:

Report Title	Date of Report	Technical Data
Geotechnical Evaluation Report Jerome WWTP Upgrades	October 25, 2022	Geotechnical

F. The following table lists the drawings of existing physical conditions at or adjacent to the Site, including those drawings depicting existing surface or subsurface structures at or adjacent to the Site (except Underground Facilities), that contain Technical Data, and specifically identifies the Technical Data upon which Contractor may rely:

Drawings Title	Date of Drawings	Technical Data
None.		

G. Contractor may **request to** ~~examine~~ **receive** copies of reports and drawings identified in SC-5.03.E and SC-5.03.F that were not included with the Bidding Documents ~~at~~ **[location]** ~~during regular business hours, or may request copies~~ from Engineer.

ARTICLE 6— BONDS AND INSURANCE

6.01 *Performance, Payment, and Other Bonds*

SC-6.01 Add the following paragraphs immediately after Paragraph 6.01.A:

1. *Required Performance Bond Form:* The performance bond that Contractor furnishes will be in the form of EJCDC® C-610, Performance Bond (~~2010, 2013, or~~ 2018 edition).

2. *Required Payment Bond Form:* The payment bond that Contractor furnishes will be in the form of EJCDC® C-615, Payment Bond (~~2010, 2013, or~~ 2018 edition).

3. All performance and payment bonds shall comply with A.R.S. Section 34-222.

Copyright© 2018 National Society of Professional Engineers, American Council of Engineering Companies, and American Society of Civil Engineers. All rights reserved.

6.02 *Insurance—General Provisions*

SC-6.02 Add the following paragraph immediately after Paragraph 6.02.B:

1. Contractor may obtain worker's compensation insurance from an insurance company that has not been rated by A.M. Best, provided that such company (a) is domiciled in the state in which the Project is located, (b) is certified or authorized as a worker's compensation insurance provider by the appropriate state agency, and (c) has been accepted to provide worker's compensation insurance for similar projects by the state within the last 12 months.

SC-6.02 Add the following paragraph immediately after Paragraph 6.02.H.2 of the General Conditions:

2. For **any** ~~the following~~ Subcontractors~~,~~ **or** Suppliers~~, or categories of Subcontractor or Supplier,~~ Contractor shall require the following specified insurance, with policy limits as stated:

Commercial General Liability	**Policy limits of not less than:**
General Aggregate	**$2,000,000**
Products—Completed Operations Aggregate	**$2,000,000**
Products—Completed Operations—Each Occurrence	**$1,000,000**
Personal and Advertising Injury	**$1,000,000**
Bodily Injury and Property Damage—Each Occurrence	**$1,000,000**
Automobile Liability	**Policy limits of not less than:**
Combined Single Limit	
Combined Single Limit (Bodily Injury and Property Damage)	**$1,000,000**
Contractor's Professional Liability	**Policy limits of not less than:**
Each Claim	**$1,000,000**
Annual Aggregate	**$1,000,000**

6.03 *Contractor's Insurance*

SC-6.03 Supplement Paragraph 6.03 with the following provisions after Paragraph 6.03.C:

D. *Other Additional Insureds:* As a supplement to the provisions of Paragraph 6.03.C of the General Conditions, the commercial general liability, automobile liability, umbrella or excess, pollution liability, and unmanned aerial vehicle liability policies must include as additional insureds (in addition to Owner and Engineer) the following: **Town of Jerome, Pacific Advanced Civil Engineering, Inc.**

E. *Workers' Compensation and Employer's Liability:* Contractor shall purchase and maintain workers' compensation and employer's liability insurance, including, as applicable, United States Longshoreman and Harbor Workers' Compensation Act, Jones Act, stop-gap employer's liability coverage for monopolistic states, and foreign voluntary workers' compensation (from available sources, notwithstanding the jurisdictional requirement of Paragraph 6.02.B of the General Conditions).

Copyright© 2018 National Society of Professional Engineers, American Council of Engineering Companies, and American Society of Civil Engineers. All rights reserved.

Workers' Compensation and Related Policies	Policy limits of not less than:
Workers' Compensation	
State	**Statutory**
Applicable Federal (e.g., Longshoreman's)	**Statutory**
Foreign voluntary workers' compensation (employer's responsibility coverage), if applicable	**Statutory**

F. *Commercial General Liability—Claims Covered:* Contractor shall purchase and maintain commercial general liability insurance, covering all operations by or on behalf of Contractor, on an occurrence basis, against claims for:

1. damages because of bodily injury, sickness or disease, or death of any person other than Contractor's employees,
2. damages insured by reasonably available personal injury liability coverage, and
3. damages because of injury to or destruction of tangible property wherever located, including loss of use resulting therefrom.

G. *Commercial General Liability—Form and Content:* Contractor's commercial liability policy must be written on a 1996 (or later) Insurance Services Organization, Inc. (ISO) commercial general liability form (occurrence form) and include the following coverages and endorsements:

1. Products and completed operations coverage.
    a. Such insurance must be maintained for three years after final payment.
    b. Contractor shall furnish Owner and each other additional insured (as identified in the Supplementary Conditions or elsewhere in the Contract) evidence of continuation of such insurance at final payment and three years thereafter.
2. Blanket contractual liability coverage, including but not limited to coverage of Contractor's contractual indemnity obligations in Paragraph 7.18.
3. Severability of interests and no insured-versus-insured or cross-liability exclusions.
4. Underground, explosion, and collapse coverage.
5. Personal injury coverage.
6. Additional insured endorsements that include both ongoing operations and products and completed operations coverage through ISO Endorsements CG 20 10 10 01 and CG 20 37 10 01 (together). If Contractor demonstrates to Owner that the specified ISO endorsements are not commercially available, then Contractor may satisfy this requirement by providing equivalent endorsements.
7. For design professional additional insureds, ISO Endorsement CG 20 32 07 04 "Additional Insured—Engineers, Architects or Surveyors Not Engaged by the Named Insured" or its equivalent.

H. *Commercial General Liability—Excluded Content:* The commercial general liability insurance policy, including its coverages, endorsements, and incorporated provisions, must not include any of the following:

Copyright© 2018 National Society of Professional Engineers, American Council of Engineering Companies, and American Society of Civil Engineers. All rights reserved.

1. Any modification of the standard definition of "insured contract" (except to delete the railroad protective liability exclusion if Contractor is required to indemnify a railroad or others with respect to Work within 50 feet of railroad property).
2. Any exclusion for water intrusion or water damage.
3. Any provisions resulting in the erosion of insurance limits by defense costs other than those already incorporated in ISO form CG 00 01.
4. Any exclusion of coverage relating to earth subsidence or movement.
5. Any exclusion for the insured's vicarious liability, strict liability, or statutory liability (other than worker's compensation).
6. Any limitation or exclusion based on the nature of Contractor's work.
7. Any professional liability exclusion broader in effect than the most recent edition of ISO form CG 22 79.

I. *Commercial General Liability—Minimum Policy Limits*

Commercial General Liability	Policy limits of not less than:
General Aggregate	**$2,000,000**
Products—Completed Operations Aggregate	**$2,000,000**
Products—Completed Operations—Each Occurrence	**$1,000,000**
Personal and Advertising Injury	**$1,000,000**
Bodily Injury and Property Damage—Each Occurrence	**$1,000,000**

J. *Automobile Liability:* Contractor shall purchase and maintain automobile liability insurance for damages because of bodily injury or death of any person or property damage arising out of the ownership, maintenance, or use of any motor vehicle. The automobile liability policy must be written on an occurrence basis.

Automobile Liability	Policy limits of not less than:
Combined Single Limit	
Combined Single Limit (Bodily Injury and Property Damage)	**$1,000,000**

K. *Umbrella or Excess Liability:* Contractor shall purchase and maintain umbrella or excess liability insurance written over the underlying employer's liability, commercial general liability, and automobile liability insurance described in the Paragraphs above. The coverage afforded must be at least as broad as that of each and every one of the underlying policies.

Excess or Umbrella Liability	Policy limits of not less than:
Each Occurrence	**$4,000,000**
General Aggregate	**$4,000,000**
Products—Completed Operations Aggregate	**$4,000,000**

L. *Using Umbrella or Excess Liability Insurance to Meet CGL and Other Policy Limit Requirements:* Contractor may meet the policy limits specified for employer's liability,

Copyright© 2018 National Society of Professional Engineers, American Council of Engineering Companies, and American Society of Civil Engineers. All rights reserved.

commercial general liability, and automobile liability through the primary policies alone, or through combinations of the primary insurance policy's policy limits and partial attribution of the policy limits of an umbrella or excess liability policy that is at least as broad in coverage as that of the underlying policy, as specified herein. If such umbrella or excess liability policy was required under this Contract, at a specified minimum policy limit, such umbrella or excess policy must retain a minimum limit of $**4,000,000** after accounting for partial attribution of its limits to underlying policies, as allowed above.

M. *Contractor's Pollution Liability Insurance:* Contractor shall purchase and maintain a policy covering third-party injury and property damage, including cleanup costs, as a result of pollution conditions arising from Contractor's operations and completed operations. This insurance must be maintained for no less than three years after final completion.

Contractor's Pollution Liability	**Policy limits of not less than:**
Each Occurrence/Claim	**$1,000,000**
General Aggregate	**$1,000,000**

N. *Contractor's Professional Liability Insurance:* If Contractor will provide or furnish professional services under this *Contract*, through a delegation of professional design services or otherwise, then Contractor shall be responsible for purchasing and maintaining applicable professional liability insurance. This insurance must cover negligent acts, errors, or omissions in the performance of professional design or related services by the insured or others for whom the insured is legally liable. The insurance must be maintained throughout the duration of the Contract and for a minimum of two years after Substantial Completion. The retroactive date on the policy must pre-date the commencement of furnishing services on the Project.

Contractor's Professional Liability	**Policy limits of not less than:**
Each Claim	**$1,000,000**
Annual Aggregate	**$1,000,000**

O. ***Deleted***

P. ***Deleted***

Q. ***Deleted***

6.04 ***Deleted***

ARTICLE 7— CONTRACTOR'S RESPONSIBILITIES

7.03 *Labor; Working Hours*

SC-7.03 Add the following new subparagraphs immediately after Paragraph 7.03.C:

1. Regular working hours will be **7:00 AM to 5:00 PM. Hours and days could be extended upon prior Owner approval.**

Copyright© 2018 National Society of Professional Engineers, American Council of Engineering Companies, and American Society of Civil Engineers. All rights reserved.

2. Owner's legal holidays are:

New Year's Day
Thanksgiving Day
Day after Thanksgiving
Day before Christmas
Christmas Day
New Year's Eve

No work is allowed on the Owner Observed Holidays without prior approval.

7.04 *Services, Materials, and Equipment*

SC-7.04.D Add the following new paragraph immediately after Paragraph 7.04.C:

D. All Iron and Steel products must meet American Iron and Steel requirements.

SC-7.04.E Add the following new paragraph immediately after Paragraph 7.04.D:

D. For projects utilizing a De Minimis waiver, Contractor shall maintain an itemized list of non-domestically produced iron or steel incidental components and ensure that the cost is less than 5% of total materials cost for project.

7.05 *"Or Equals"*

SC-7.05.A Amend the third sentence of paragraph by striking out the following words:

Unless the specification or description contains or is followed by words reading that no like, equivalent, or "or-equal" item is permitted,

SC-7.05.A.1.a.3 Amend the last sentence of Paragraph a.3 by striking out "and;" and adding a period at the end of Paragraph a.3.

SC-7.05.A.1.a.4 Delete paragraph in its entirety and insert "Deleted."

SC-7.05.B Add the following at the end of paragraph:

Contractor shall include a Manufacturer's Certification letter for compliance with American Iron and Steel requirements in support data, if applicable. Refer to Manufacturer's Certification Letter provided in these Contract Documents.

7.06 *Substitutes*

SC-7.06.A.3.a.2 Remove "and" from the end of paragraph.

SC-7.06.A.3.a.3 Add "; and" to the end of paragraph.

SC-7.06.A.3.a.4 Add the following new paragraph immediately after Paragraph 7.06.A.3.a.3:

4) Comply with American Iron and Steel by providing Manufacturer's Certification letter of American Iron and Steel compliance, if applicable. Refer to Manufacturer's Certification Letter provided in these Contract Documents.

7.07 *Concerning Subcontractors and Suppliers*

SC-7.07.A Amend by adding the following to the end of the paragraph:

The total amount of work subcontracted by the Contractor shall not exceed fifty percent of the Contract price without prior approval from the Owner, Engineer and Agency.

Copyright© 2018 National Society of Professional Engineers, American Council of Engineering Companies, and American Society of Civil Engineers. All rights reserved.

SC-7.07.B – Delete paragraph in its entirety and insert ”Deleted”.

SC-7.07.E Delete the second sentence of paragraph and insert the following in its place:

Owner may not require that Contractor use a specific replacement.

7.12 *Record Documents*

SC-7.12.A Delete the second sentence of paragraph and insert the following in its place:

Owner may not require that Contractor use a specific replacement.

SC-7.12.A Amend paragraph by adding the following after ”written interpretations and clarifications,”

Manufacturers’ Certifications,

7.16 *Submittals*

SC-7.16.A.1.c Amend paragraph by deleting the last period and adding:

, including Manufacturer’s Certification letter for any item in the submittal subject to American Iron and Steel requirements and include the Certificate in the submittal. Refer to Manufacturer’s Certification Letter provided in these Contract Documents.

SC-7.16.C.9 Add new paragraph immediately after Paragraph 7.16.C.8:

1. Engineer’s review and approval of a Shop Drawing or Sample shall include review of Manufacturers’ Certifications in order to document compliance with American Iron and Steel requirements, as applicable.

7.17 *Contractor’s General Warranty and Guarantee*

SC-7.17.F Add new paragraph immediately after Paragraph 7.17.E:

F. Contractor shall certify upon Substantial Completion that all Work and Materials have complied with American Iron and Steel requirements as mandated by Section 746 of Title VII of the Consolidated Appropriations Act of 2017 (Division A - Agriculture, Rural Development, Food and Drug Administration, and Related Agencies Appropriations Act, 2017) and subsequent statutes mandating domestic preference. Contractor shall provide said Certification to Owner. Refer to General Contractor’s Certification Letter provided in these Contract Documents.

ARTICLE 8— OTHER WORK AT THE SITE

8.02 *Coordination*

SC-8.02 Add the following new Paragraph 8.02.C immediately after Paragraph 8.02.B:

C. The Jerome Wastewater Treatment Plant will remain operational during construction of the upgrades and the Contractor shall coordinate closely with the Resident Project Representative to ensure operational activities are not inhibited.

ARTICLE 9— OWNER’S RESPONSIBILITIES

No suggested Supplementary Conditions in this Article.

Copyright© 2018 National Society of Professional Engineers, American Council of Engineering Companies, and American Society of Civil Engineers. All rights reserved.

ARTICLE 10— ENGINEER'S STATUS DURING CONSTRUCTION

10.03 *Resident Project Representative*

SC-10.03 Add the following new paragraphs immediately after Paragraph 10.03.B:

C. The Resident Project Representative (RPR) will be Engineer's representative at the Site. RPR's dealings in matters pertaining to the Work in general will be with Engineer and Contractor. RPR's dealings with Subcontractors will only be through or with the full knowledge or approval of Contractor. The RPR will:

1. *Conferences and Meetings:* Attend meetings with Contractor, such as preconstruction conferences, progress meetings, job conferences, and other Project-related meetings (but not including Contractor's safety meetings), and as appropriate prepare and circulate copies of minutes thereof.

2. *Safety Compliance:* Comply with Site safety programs, as they apply to RPR, and if required to do so by such safety programs, receive safety training specifically related to RPR's own personal safety while at the Site.

3. *Liaison*

   a. Serve as Engineer's liaison with Contractor. Working principally through Contractor's authorized representative or designee, assist in providing information regarding the provisions and intent of the Contract Documents.

   b. Assist Engineer in serving as Owner's liaison with Contractor when Contractor's operations affect Owner's on-Site operations.

   c. Assist in obtaining from Owner additional details or information, when required for Contractor's proper execution of the Work.

4. *Review of Work; Defective Work*

   a. Conduct on-Site observations of the Work to assist Engineer in determining, to the extent set forth in Paragraph 10.02, if the Work is in general proceeding in accordance with the Contract Documents.

   b. Observe whether any Work in place appears to be defective.

   c. Observe whether any Work in place should be uncovered for observation, or requires special testing, inspection or approval.

5. *Inspections and Tests*

   a. Observe Contractor-arranged inspections required by Laws and Regulations, including but not limited to those performed by public or other agencies having jurisdiction over the Work.

   b. Accompany visiting inspectors representing public or other agencies having jurisdiction over the Work.

6. *Payment Requests:* Review Applications for Payment with Contractor.

7. *Completion*

   a. Participate in Engineer's visits regarding Substantial Completion.

Copyright© 2018 National Society of Professional Engineers, American Council of Engineering Companies, and American Society of Civil Engineers. All rights reserved.

b. Assist in the preparation of a punch list of items to be completed or corrected.

c. Participate in Engineer's visit to the Site in the company of Owner and Contractor regarding completion of the Work, and prepare a final punch list of items to be completed or corrected by Contractor.

d. Observe whether items on the final punch list have been completed or corrected.

D. The RPR will not:

1. Authorize any deviation from the Contract Documents or substitution of materials or equipment (including "or-equal" items).

2. Exceed limitations of Engineer's authority as set forth in the Contract Documents.

3. Undertake any of the responsibilities of Contractor, Subcontractors, or Suppliers.

4. Advise on, issue directions relative to, or assume control over any aspect of the means, methods, techniques, sequences or procedures of construction.

5 Advise on, issue directions regarding, or assume control over security or safety practices, precautions, and programs in connection with the activities or operations of Owner or Contractor.

6. Participate in specialized field or laboratory tests or inspections conducted off-site by others except as specifically authorized by Engineer.

7. Authorize Owner to occupy the Project in whole or in part.

ARTICLE 11— CHANGES TO THE CONTRACT

11.02 *Change Orders*

SC-11.02.C Add new paragraph immediately after Paragraph 11.02.B:

C. The Engineer or Owner shall contact the Agency for concurrence on each Change Order prior to issuance. All Contract Change Orders must be concurred on (signed) by Agency before they are effective.

11.03 *Work Change Directives*

SC-11.03.A.2 Add new Paragraph 11.03.A.2 immediately after Paragraph 11.03.A, which shall be renamed Paragraph 11.03.A.1:

2. The Engineer or Owner shall contact the Agency for concurrence on each Work Change Directive prior to issuance. Once authorized by Owner, a copy of each Work Change Directive shall be provided by Engineer to the Agency.

11.05 *Owner-Authorized Changes in the Work*

SC-11.05.B Add the following at the end of this paragraph:

For Owner-authorized changes in the Work, the Contractor will provide the Manufacturer's Certification(s) for materials subject to American Iron and Steel requirements except when sole-source is specified, in which case the Engineer will provide the Manufacturer's Certification(s).

11.09 *Change Proposals*

Copyright© 2018 National Society of Professional Engineers, American Council of Engineering Companies, and American Society of Civil Engineers. All rights reserved.

SC-11.09.B.2.C Add new paragraph immediately after Paragraph 11.09.B.2.b:

C. **Change orders involving materials subject to American Iron and Steel requirements shall include supporting data (name of Manufacturer, city and state where the product was manufactured, description of product, signature of authorized Manufacturer's representative) in the Manufacturer's Certification Letter, as applicable**.

ARTICLE 12— CLAIMS

No suggested Supplementary Conditions in this Article.

ARTICLE 13— COST OF WORK; ALLOWANCES, UNIT PRICE WORK

13.01 *Cost of the Work*

SC-13.01 Supplement Paragraph 13.01.B.5.c.(2) by adding the following sentence:

The equipment rental rate book that governs the included costs for the rental of machinery and equipment owned by Contractor (or a related entity) under the Cost of the Work provisions of this Contract is the most current edition of **Rental Rate Blue Book For Construction Equipment.**

SC-13.01 Supplement Paragraph 13.01.C.2 by adding the following definition of small tools and hand tools:

a. For purposes of this paragraph, "small tools and hand tools" means any tool or equipment whose current price if it were purchased new at retail would be less than $500.

13.02 *Allowances*

SC-13.02.C Delete paragraph in its entirety and insert "Deleted".

ARTICLE 14— TESTS AND INSPECTIONS; CORRECTION, REMOVAL, OR ACCCEPTANCE OF DEFECTIVE WORK

14.03 *Defective Work*

SC-14.03.G Add new paragraph immediately after Paragraph 14.03.F:

G. Installation of materials that are non-compliant with American Iron and Steel requirements shall be considered defective work.

ARTICLE 15— PAYMENTS TO CONTRACTOR, SET OFFS; COMPLETIONS; CORRECTION PERIOD

15.01 *Progress Payments*

SC-15.01.B.4 Add the following language at the end of paragraph:

No payments will be made that would deplete the retainage, place in escrow any funds that are required for retainage or invest the retainage for the benefit of the Contractor.

SC-15.01.B.5 Add new paragraph immediately after Paragraph 15.01.B.4:

Copyright© 2018 National Society of Professional Engineers, American Council of Engineering Companies, and American Society of Civil Engineers. All rights reserved.

5. The Application for Payment form to be used on this Project is EJCDC® C-620. The Agency must approve all Applications for Payment before payment is made.

SC-15.01.B.6 Add new paragraph immediately after Paragraph 15.01.B.5:

6. By submitting an Application for Payment based in whole or in part on furnishing equipment or materials, Contractor certifies that such equipment and materials are compliant with American Iron and Steel requirements. Manufacturer's Certification letter for materials satisfy this requirement. Refer to Manufacturer's Certification Letter provided in these Contract Documents.

SC-15.01.C.2.d Add the following new paragraph immediately after Paragraph 15.01.C.2.c:

a. The materials presented for payment in an Application for Payment comply with American Iron and Steel requirements.

SC-15.01.D.1 Delete paragraph in its entirety and insert the following in its place:

1. The Application for Payment with Engineer's recommendations will be presented to the Owner and Agency for consideration. If both the Owner and Agency find the Application for Payment acceptable, the recommended amount less any reduction under the provisions of Paragraph 15.01.E will become due twenty (20) days after the Application for Payment is presented to the Owner, and the Owner will make payment to the Contractor.

15.02 *Contractor's Warranty of Title*

SC-15.02.A Amend paragraph by striking out the following text: "7 days after".

15.03 *Substantial Completion*

SC-15.03.A Modify by adding the following after the last sentence:

Contractor shall also submit the General (Prime) Contractor's Certification of Compliance certifying that to the best of the Contractor's knowledge and belief all substitutes, equals, and all Iron and Steel products proposed in the Shop Drawings, Change Orders, and Partial Payment Estimates, and those installed for the Project, are either Produced in the United States or are the subject of an approved waiver under Section 746 of Title VII of the Consolidated Appropriations Act of 2017 (Division A - Agriculture, Rural Development, Food and Drug Administration, and Related Agencies Appropriations Act, 2017) and subsequent statutes mandating domestic preference.

SC-15.03.B Add the following new subparagraph to Paragraph 15.03.B:

1. If some or all of the Work has been determined not to be at a point of Substantial Completion and will require re-inspection or re-testing by Engineer, the cost of such re-inspection or re-testing, including the cost of time, travel and living expenses, will be paid by Contractor to Owner. If Contractor does not pay, or the parties are unable to agree as to the amount owed, then Owner may impose a reasonable set-off against payments due under this Article 15.

Copyright© 2018 National Society of Professional Engineers, American Council of Engineering Companies, and American Society of Civil Engineers. All rights reserved.

15.08 *Correction Period*

SC-15.08 Add the following new Paragraph 15.08.G:

G. The correction period specified as one year after the date of Substantial Completion in Paragraph 15.08.A of the General Conditions is hereby revised to be the number of years set forth in SC-6.01.B.1; or if no such revision has been made in SC-6.01.B, then the correction period is hereby specified to be **two (2)** years after Substantial Completion.

ARTICLE 16— SUSPENSION OF WORK AND TERMINATION

No suggested Supplementary Conditions in this Article.

ARTICLE 17— FINAL RESOLUTIONS OF DISPUTES

17.02 *Arbitration*

SC-17.02 Add the following new paragraph immediately after Paragraph 17.01.

17.02 *Arbitration*

A. All matters subject to final resolution under this Article will be settled by arbitration administered by the American Arbitration Association in accordance with its Construction Industry Arbitration Rules (subject to the conditions and limitations of this Paragraph SC-17.02). Any controversy or claim in the amount of $100,000 or less will be settled in accordance with the American Arbitration Association's supplemental rules for Fixed Time and Cost Construction Arbitration. This agreement to arbitrate will be specifically enforceable under the prevailing law of any court having jurisdiction.

B. The demand for arbitration will be filed in writing with the other party to the Contract and with the selected arbitration administrator, and a copy will be sent to Engineer for information. The demand for arbitration will be made within the specific time required in Article 17, or if no specified time is applicable within a reasonable time after the matter in question has arisen, and in no event will any such demand be made after the date when institution of legal or equitable proceedings based on such matter in question would be barred by the applicable statute of limitations.

C. The arbitrator(s) must be licensed engineers, contractors, attorneys, or construction managers. Hearings will take place pursuant to the standard procedures of the Construction Arbitration Rules that contemplate in-person hearings. The arbitrators will have no authority to award punitive or other damages not measured by the prevailing party's actual damages, except as may be required by statute or the Contract. Any award in an arbitration initiated under this clause will be limited to monetary damages and include no injunction or direction to any party other than the direction to pay a monetary amount.

D. The Arbitrators will have the authority to allocate the costs of the arbitration process among the parties, but will only have the authority to allocate attorneys' fees if a specific Law or Regulation or this Contract permits them to do so.

E. The award of the arbitrators must be accompanied by a reasoned written opinion and a concise breakdown of the award. The written opinion will cite the Contract provisions deemed applicable and relied on in making the award.

Copyright© 2018 National Society of Professional Engineers, American Council of Engineering Companies, and American Society of Civil Engineers. All rights reserved.

F. The parties agree that failure or refusal of a party to pay its required share of the deposits for arbitrator compensation or administrative charges will constitute a waiver by that party to present evidence or cross-examine witness. In such event, the other party shall be required to present evidence and legal argument as the arbitrator(s) may require for the making of an award. Such waiver will not allow for a default judgment against the non-paying party in the absence of evidence presented as provided for above.

G. No arbitration arising out of or relating to the Contract will include by consolidation, joinder, or in any other manner any other individual or entity (including Engineer, and Engineer's consultants and the officers, directors, partners, agents, employees or consultants of any of them) who is not a party to this Contract unless:

1. the inclusion of such other individual or entity will allow complete relief to be afforded among those who are already parties to the arbitration;

2. such other individual or entity is substantially involved in a question of law or fact which is common to those who are already parties to the arbitration, and which will arise in such proceedings;

3. such other individual or entity is subject to arbitration under a contract with either Owner or Contractor, or consents to being joined in the arbitration; and

4. the consolidation or joinder is in compliance with the arbitration administrator's procedural rules.

H. The award will be final. Judgment may be entered upon it in any court having jurisdiction thereof, and it will not be subject to modification or appeal, subject to provisions of the Laws and Regulations relating to vacating or modifying an arbitral award.

I. Except as may be required by Laws or Regulations, neither party nor an arbitrator may disclose the existence, content, or results of any arbitration hereunder without the prior written consent of both parties, with the exception of any disclosure required by Laws and Regulations or the Contract. To the extent any disclosure is allowed pursuant to the exception, the disclosure must be strictly and narrowly limited to maintain confidentiality to the extent possible.

17.03 *Attorneys' Fees*

SC-17.03 Add the following new paragraph immediately after Paragraph 17.02.

17.03 *Attorneys' Fees*

A. For any matter subject to final resolution under this Article, the prevailing party shall be entitled to an award of its attorneys' fees incurred in the final resolution proceedings, in an equitable amount to be determined in the discretion of the court, arbitrator, arbitration panel, or other arbiter of the matter subject to final resolution, taking into account the parties' initial demand or defense positions in comparison with the final result.

Copyright© 2018 National Society of Professional Engineers, American Council of Engineering Companies, and American Society of Civil Engineers. All rights reserved.

ARTICLE 18— MISCELLANEOUS

SC-18.11 Add new paragraph immediately after Paragraph 18.10:

18.11 ***Tribal Sovereignty***

A. No provision of this Agreement will be construed by any of the signatories as abridging or debilitating any sovereign powers of the [insert name of Tribe] Tribe; affecting the trust-beneficiary relationship between the Secretary of the Interior, Tribe, and Indian landowner(s); or interfering with the government-to-government relationship between the United States and the Tribe.

SC-19 – Add the following new Article 19 immediately after Article 18:

ARTICLE 19— FEDERAL REQUIREMENTS

19.01 ***Agency Not a Party***

A. This Contract is expected to be funded in part with funds provided by Agency. Neither Agency, nor any of its departments, entities, or employees, is a party to this Contract.

19.02 ***Contract Approval***

A. Owner and Contractor will furnish Owner's attorney such evidence as required so that Owner's attorney can complete and execute the "Certificate of Owner's Attorney" (Exhibit G of this Bulletin) before Owner submits the executed Contract Documents to Agency for approval.

B. Agency concurrence is required on both the Bid and the Contract before the Contract is effective.

19.03 ***Conflict of Interest***

A. Contractor may not knowingly contract with a Supplier or Manufacturer if the individual or entity who prepared the Drawings and Specifications has a corporate or financial affiliation with the Supplier or Manufacturer. Owner's officers, employees, or agents shall not engage in the award or administration of this Contract if a conflict of interest, real or apparent, would be involved. Such a conflict would arise when: (i) the employee, officer or agent; (ii) any member of their immediate family; (iii) their partner or (iv) an organization that employs, or is about to employ, any of the above, has a financial interest or other interest in or a tangible personal benefit from the Contractor. Owner's officers, employees, or agents shall neither solicit nor accept gratuities, favors or anything of monetary value from Contractor or subcontractors.

19.04 ***Gratuities***

A. If Owner finds after a notice and hearing that Contractor, or any of Contractor's agents or representatives, offered or gave gratuities (in the form of entertainment, gifts, or otherwise) to any official, employee, or agent of Owner or Agency in an attempt to secure this Contract or favorable treatment in awarding, amending, or making any determinations related to the performance of this Contract, Owner may, by written notice to Contractor, terminate this Contract. Owner may also pursue other rights and remedies that the law or this Contract provides. However, the existence of the facts on which Owner bases such

Copyright© 2018 National Society of Professional Engineers, American Council of Engineering Companies, and American Society of Civil Engineers. All rights reserved.

findings shall be an issue and may be reviewed in proceedings under the dispute resolution provisions of this Contract.

B. In the event this Contract is terminated as provided in paragraph 19.04.A, Owner may pursue the same remedies against Contractor as it could pursue in the event of a breach of this Contract by Contractor. As a penalty, in addition to any other damages to which it may be entitled by law, Owner may pursue exemplary damages in an amount (as determined by Owner) which shall not be less than three nor more than ten times the costs Contractor incurs in providing any such gratuities to any such officer or employee.

19.05 ***Small, Minority and Women's Businesses***

A. If Contractor intends to let any subcontracts for a portion of the work, Contractor will take all necessary affirmative steps to assure that minority businesses, women's business enterprises, and labor surplus area firms are used when possible. Affirmative steps will include:

1. Placing qualified small and minority businesses and women's business enterprises on solicitation lists;

2. Assuring that small and minority businesses, and women's business enterprises are solicited whenever they are potential sources;

3. Dividing total requirements, when economically feasible, into smaller tasks or quantities to permit maximum participation by small and minority businesses, and women's business enterprises;

4. Establishing delivery schedules, where the requirement permits, which encourage participation by small and minority businesses, and women's business enterprises;

5. Using the services and assistance, as appropriate, of such organizations as the Small Business Administration and the Minority Business Development Agency of the Department of Commerce.

19.06 ***Anti-Kickback***

A. Contractor shall comply with the Copeland Anti-Kickback Act (40 USC 3145) as supplemented by Department of Labor regulations (29 CFR Part 3, "Contractors and Subcontractors on Public Buildings or Public Works Financed in Whole or in Part by Loans or Grants of the United States"). The Act provides that Contractor or subcontractor shall be prohibited from inducing, by any means, any person employed in the construction, completion, or repair of public facilities, to give up any part of the compensation to which they are otherwise entitled. Owner shall report all suspected or reported violations to Agency.

19.07 ***Clean Air Act (42 U.S.C. 7401-7671q.) and the Federal Water Pollution Control Act (33 U.S.C. 1251-1387), as amended***

A. Contractor to agree to comply with all applicable standards, orders or regulations issued pursuant to the Clean Air Act (42 U.S.C. 7401-7671q) and the Federal Water Pollution Control Act as amended (33 U.S.C. 1251-1387). Violations must be reported to the federal awarding agency and the Regional Office of the Environmental Protection Agency (EPA).

19.08 ***Equal Employment Opportunity***

Copyright© 2018 National Society of Professional Engineers, American Council of Engineering Companies, and American Society of Civil Engineers. All rights reserved.

A. The Contract is considered a federally assisted construction contract. Except as otherwise provided under 41 CFR Part 60, all contracts that meet the definition of "federally assisted construction contract" in 41 CFR Part 60-1.3 must include the equal opportunity clause provided under 41 CFR 60-1.4(b), in accordance with Executive Order 11246, "Equal Employment Opportunity" (30 FR 12319, 12935, 3 CFR Part, 1964-1965 Comp., p. 339), as amended by Executive Order 11375, "Amending Executive Order 11246 Relating to Equal Employment Opportunity," and implementing regulations at 41 CFR part 60, "Office of Federal Contract Compliance Programs, Equal Employment Opportunity, Department of Labor."

19.09 ***Byrd Anti-Lobbying Amendment (31 U.S.C. 1352)***

A. Contractors that apply or bid for an award exceeding $100,000 must file the required certification (RD Instruction 1940-Q Exhibit A-1). The Contractor certifies to the Owner and every subcontractor certifies to the Contractor that it will not and has not used federal appropriated funds to pay any person or organization for influencing or attempting to influence an officer or employee of any agency, a member of Congress, officer or employee of Congress, or an employee of a member of Congress in connection with obtaining the Contract if it is covered by 31 U.S.C. 1352. The Contractor and every subcontractor must also disclose any lobbying with non-federal funds that takes place in connection with obtaining any federal award. Such disclosures are forwarded from tier to tier up to the Owner. Necessary certification and disclosure forms shall be provided by Owner.

19.10 Environmental Requirements

A. When constructing a Project involving trenching and/or other related earth excavations, Contractor shall comply with the following environmental conditions:

1. Wetlands – When disposing of excess, spoil, or other Construction Materials on public or private property, Contractor shall not fill in or otherwise convert wetlands. Floodplains – When disposing of excess, spoil, or other Construction Materials on public or private property, Contractor shall not fill in or otherwise convert 100-year floodplain areas (Standard Flood Hazard Area) delineated on the latest Federal Emergency Management Agency Floodplain Maps, or other appropriate maps, e.g., alluvial soils on

2. NRCS Soil Survey Maps.

3. Historic Preservation - Applicants shall ensure that Contractors maintain a copy of the following inadvertent discovery plan onsite for review:

a. If during the course of any ground disturbance related to any Project, any post review discovery, including but not limited to, any artifacts, foundations, or other indications of past human occupation of the area are uncovered, shall be protected by complying with 36 CFR § 800.13(b)(3) and (c) and shall include the following:

1) All Work, including vehicular traffic, shall immediately stop within a 50 ft. radius around the area of discovery. The Contractor shall ensure barriers are established to protect the area of discovery and notify the Engineer to contact the appropriate RD personnel. The Engineer shall engage a Secretary of the Interior (SOI) qualified professional archeologist to quickly assess the nature and scope of the discovery; implement interim measures to protect

Copyright© 2018 National Society of Professional Engineers, American Council of Engineering Companies, and American Society of Civil Engineers. All rights reserved.

the discovery from looting and vandalism; and establish broader barriers if further historic and/or precontact properties, can reasonably be expected to occur.

2) The RD personnel shall notify the appropriate RD environmental staff member, the Federal Preservation Officer (FPO), and State Historic Preservation Office (SHPO) immediately. Indian tribe(s) or Native Hawaiian Organization (NHOs) that have an interest in the area of discovery shall be contacted immediately. The SHPO may require additional tribes or NHOs who may have an interest in the area of discovery also be contacted. The notification shall include an assessment of the discovery provided by the SOI qualified professional archeologist.

3) When the discovery contains burial sites or human remains, the Contractor shall immediately notify the appropriate RD personnel who will contact the RD environmental staff member, FPO, and the SHPO. The relevant law enforcement authorities shall be immediately contacted by onsite personnel to reduce delay times, in accordance with tribal, state, or local laws including 36 CFR Part 800.13; 43 CFR Part 10, Subpart B; and the Advisory Council on Historic Preservation's Policy Statement Regarding treatment of Burial Sites, Human Remains, or Funerary Objects (February 23, 2007).

4) When the discovery contains burial sites or human remains, all construction activities, including vehicular traffic shall stop within a 100 ft. radius of the discovery and barriers shall be established. The evaluation of human remains shall be conducted at the site of discovery by a SOI qualified professional. Remains that have been removed from their primary context and where that context may be in question may be retained in a secure location, pending further decisions on treatment and disposition. RD may expand this radius based on the SOI professional's assessment of the discovery and establish broader barriers if further subsurface burial sites, or human remains can reasonably be expected to occur. RD, in consultation with the SHPO and interested tribes or NHOs, shall develop a plan for the treatment of native human remains.

5) Work may continue in other areas of the undertaking where no historic properties, burial sites, or human remains are present. If the inadvertent discovery appears to be a consequence of illegal activity such as looting, the onsite personnel shall contact the appropriate legal authorities immediately if the landowner has not already done so.

6) Work may not resume in the area of the discovery until a notice to proceed has been issued by RD. RD shall not issue the notice to proceed until it has determined that the appropriate local protocols and consulting parties have been consulted.

7) Inadvertent discoveries on federal and tribal land shall follow the processes required by the federal or tribal entity.

4. Endangered Species – Contractor shall comply with the Endangered Species Act, which provides for the protection of endangered and/or threatened species and critical

Copyright© 2018 National Society of Professional Engineers, American Council of Engineering Companies, and American Society of Civil Engineers. All rights reserved.

habitat. Should any evidence of the presence of endangered and/or threatened species or their critical habitat be brought to the attention of Contractor, Contractor will immediately report this evidence to Owner and a representative of Agency. Construction shall be temporarily halted pending the notification process and further directions issued by Agency after consultation with the U.S. Fish and Wildlife Service.

5. Mitigation Measures – The following environmental mitigation measures are required on this Project: [Insert mitigation measures from the Letter of Conditions here].

19.11 ***Contract Work Hours and Safety Standards Act (40 U.S.C. 3701-3708)***

A. Where applicable, for contracts awarded by the Owner in excess of $100,000 that involve the employment of mechanics or laborers, the Contractor will comply with 40 U.S.C. 3702 and 3704, as supplemented by Department of Labor regulations (29 CFR Part 5). Under 40 U.S.C. 3702 of the Act, the Contractor will compute the wages of every mechanic and laborer on the basis of a standard work week of 40 hours. Work in excess of the standard work week is permissible provided that the worker is compensated at a rate of not less than one and a half times the basic rate of pay for all hours worked in excess of 40 hours in the work week. The requirements of 40 U.S.C. 3704 are applicable to construction work and provide that no laborer or mechanic will be required to work in surroundings or under working conditions which are unsanitary, hazardous or dangerous. These requirements do not apply to the purchases of supplies or materials or articles ordinarily available on the open market, or contracts for transportation or transmission of intelligence.

19.12 ***Debarment and Suspension (Executive Orders 12549 and 12689)***

A. A contract award (see 2 CFR 180.220) must not be made to parties listed on the governmentwide exclusions in the System for Award Management (SAM), in accordance with the OMB guidelines at 2 CFR 180 that implement Executive Orders 12549 (3 CFR part 1986 Comp., p. 189) and 12689 (3 CFR part 1989 Comp., p. 235), "Debarment and Suspension." SAM Exclusions contains the names of parties debarred, suspended, or otherwise excluded by agencies, as well as parties declared ineligible under statutory or regulatory authority other than Executive Order 12549.

19.13 ***Procurement of recovered materials***

A. The Contractor will comply with 2 CFR Part 200.322, "Procurement of recovered materials."

19.14 ***American Iron and Steel***

A. Section 746 of Title VII of the Consolidated Appropriations Act of 2017 (Division A - Agriculture, Rural Development, Food and Drug Administration, and Related Agencies Appropriations Act, 2017) and subsequent statutes mandating domestic preference applies an American Iron and Steel requirement to this project. All iron and steel products used in this project must be produced in the United States. The term "iron and steel products" means the following products made primarily of iron or steel: lined or unlined pipes and fittings, manhole covers and other municipal castings, hydrants, tanks, flanges, pipe clamps and restraints, valves, structural steel, reinforced precast concrete, and Construction Materials.

B. The following waivers apply to this Contract:

1. De Minimis,

Copyright© 2018 National Society of Professional Engineers, American Council of Engineering Companies, and American Society of Civil Engineers. All rights reserved.

2. Minor Components,

3. Pig iron and direct reduced iron.

ARTICLE 20— STATE REQUIREMENTS

20.01 ***Statutory Required Provisions and Requirements***

A. **This Contract is subject to termination pursuant to A.R.S. § 38-511, as may be amended. Pursuant to A.R.S. § 35-394, as may be amended, unless exempt, the Contractor hereby certifies that it is does not use, and agrees not to use during the term of the Contract, any of the following: forced labor of ethnic Uyghurs in the People's Republic of China; any goods or services produced by the forced labor of ethnic Uyghurs in the People's Republic of China; or any contractors, subcontractors, or suppliers that use the forced labor or any goods or services produced by the forced labor of ethnic Uyghurs in the People's Republic of China.**

Copyright© 2018 National Society of Professional Engineers, American Council of Engineering Companies, and American Society of Civil Engineers. All rights reserved.

EXHIBIT A—SOFTWARE REQUIREMENTS FOR ELECTRONIC DOCUMENT EXCHANGE

Item	Electronic Documents	Transmittal Means	Data Format	Note (1)
a.1	General communications, transmittal covers, meeting notices and responses to general information requests for which there is no specific prescribed form.	Email	Email	
a.2	Meeting agendas, meeting minutes, RFI's and responses to RFI's, and Contract forms.	Email w/ Attachment	PDF	(2)
a.3	Contactors Submittals (Shop Drawings, "or equal" requests, substitution requests, documentation accompanying Sample submittals and other submittals) to Owner and Engineer, and Owner's and Engineer's responses to Contractor's Submittals, Shop Drawings, correspondence, and Applications for Payment.	Email w/ Attachment	PDF	
a.4	Correspondence; milestone and final version Submittals of reports, layouts, Drawings, maps, calculations and spreadsheets, Specifications, Drawings and other Submittals from Contractor to Owner or Engineer and for responses from Engineer and Owner to Contractor regarding Submittals.	Email w/ Attachment or LFE	PDF	
a.5	Layouts and drawings to be submitted to Owner for future use and modification.	Email w/ Attachment or LFE	DWG	
a.6	Correspondence, reports and Specifications to be submitted to Owner for future word processing use and modification.	Email w/ Attachment or LFE	DOC	
a.7	Spreadsheets and data to be submitted to Owner for future data processing use and modification.	Email w/ Attachment or LFE	EXC	
a.8	Database files and data to be submitted to Owner for future data processing use and modification.	Email w/ Attachment or LFE	DB	

Notes	
(1)	All exchanges and uses of transmitted data are subject to the appropriate provisions of Contract Documents.
(2)	Transmittal of written notices is governed by Paragraph 18.01 of the General Conditions.

Key	
Email	Standard Email formats (.htm, .rtf, or .txt). Do not use stationery formatting or other features that impair legibility of content on screen or in printed copies
LFE	Agreed upon Large File Exchange method (FTP, CD, DVD, hard drive)
PDF	Portable Document Format readable by Adobe® Acrobat Reader Version
DWG	Autodesk® AutoCAD .dwg format Version **2019**
DOC	Microsoft® Word .docx format
EXC	Microsoft® Excel .xls or .xml format
DB	Microsoft® Access .mdb format

Copyright© 2018 National Society of Professional Engineers, American Council of Engineering Companies, and American Society of Civil Engineers. All rights reserved.

EXHIBIT B—FORESEEABLE BAD WEATHER DAYS

Month	Number of Foreseeable Bad Weather Days in Month Based on Precipitation as Rain Equivalent (inches) (1)	Ambient Outdoor Air Temperature (degrees F)	
		Number of Foreseeable Bad Weather Days in Month Based on Low Temperature (at 11:00 a.m.)	Number of Foreseeable Bad Weather Days in Month Based on High Temperature (at 3:00 p.m.)
January			
February			
March			
April			
May			
June	2 days		3 days
July	3 days		10 days
August	3 days		3 days
September	2 days		2 days
October	2 days		
November			
December			

Notes:
1. Two inches of sleet equal one inch of rain. Five inches of wet, heavy snow equal one inch of rain. Fifteen inches of “dry” powder snow equals one inch of rain.

Copyright© 2018 National Society of Professional Engineers, American Council of Engineering Companies, and American Society of Civil Engineers. All rights reserved.

NOTICE TO PROCEED

Owner:	Town of Jerome	Owner's Project No.:	N/A
Engineer:	PACE	Engineer's Project No.:	B614
Contractor:	Fann Environmental, LLC	Contractor's Project No.:	
Project:	Jerome Wastewater Treatment Plant Improvements		
Contract Name:	Jerome Wastewater Treatment Plant Improvements		
Effective Date of Contract:			

Owner hereby notifies Contractor that the Contract Times under the above Contract will commence to run on **[date Contract Times are to start]** pursuant to Paragraph 4.01 of the General Conditions.

On that date, Contractor shall start performing its obligations under the Contract Documents. No Work will be done at the Site prior to such date.

In accordance with the Agreement: **[Select one of the following two alternatives, insert dates or number of days, and delete the other alternative.]**

The number of days to achieve Substantial Completion is **300** from the date stated above for the commencement of the Contract Times, resulting in a date for Substantial Completion of **[date, calculated from commencement date above]**; and the number of days to achieve readiness for final payment is **330** from the commencement date of the Contract Times, resulting in a date for readiness for final payment of **[date, calculated from commencement date above]**.

Before starting any Work at the Site, Contractor must comply with the following:

- **Provide preliminary schedule**
- **Provide proposed pay application schedule of values for Engineer review**

Owner:	Town of Jerome
By *(signature)*:	
Name *(printed)*:	
Title:	
Date Issued:	

Copy: Engineer

EJCDC® C-550, Notice to Proceed.
Copyright© 2018 National Society of Professional Engineers, American Council of Engineering Companies, and American Society of Civil Engineers. All rights reserved.

Temporary Construction Sign for Rural Development Projects

Recommended Font: Arial

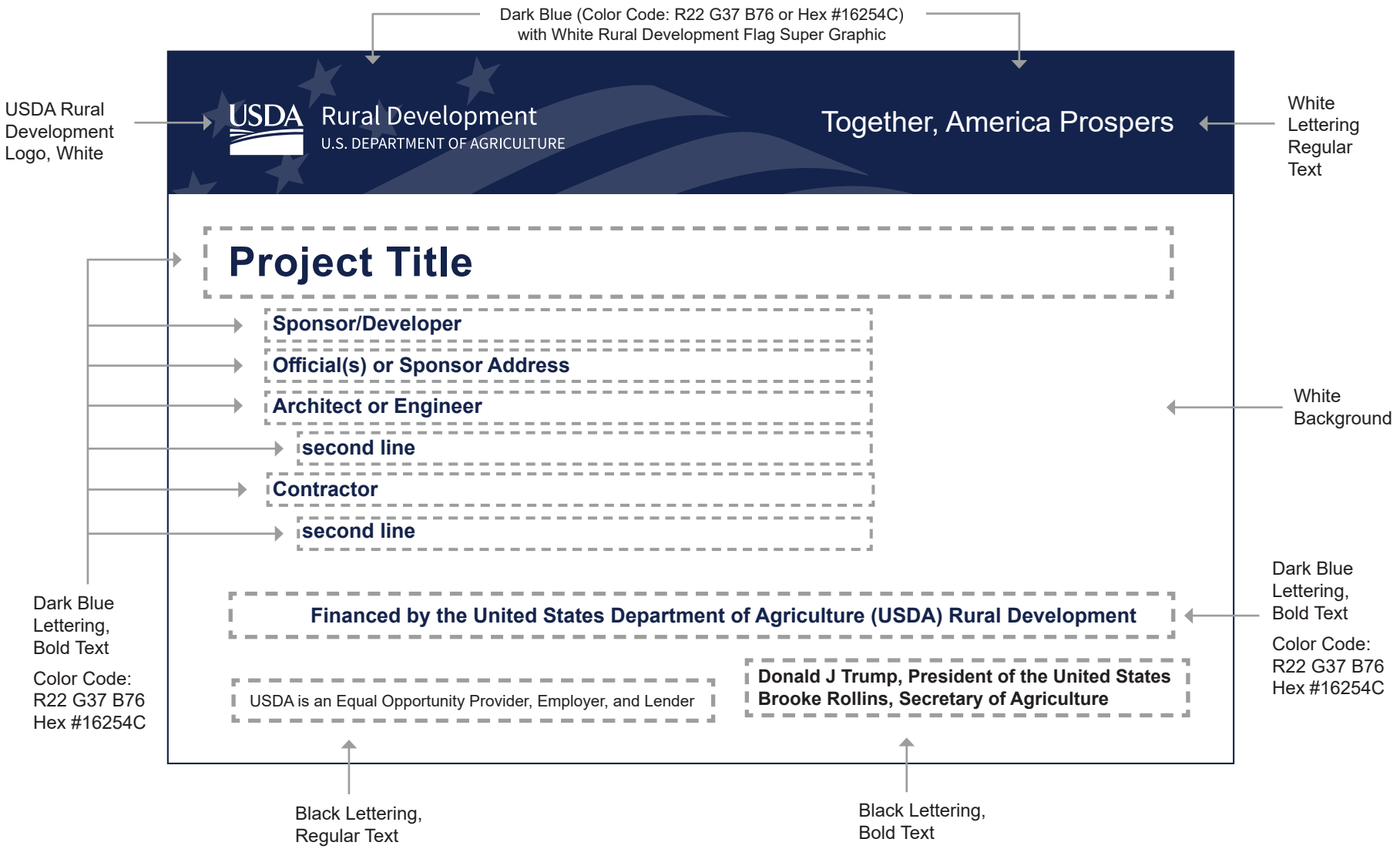

SIGN DIMENSIONS: 1200mm x 2400mm x 19mm (approx.4’ x 8’ x 3/4)
PLYWOOD PANEL (APA RATED A+B GRADE-EXTERIOR)

Contractor's Application for Payment

Owner:	Town of Jerome	**Owner's Project No.:**	N/A
Engineer:	PACE	**Engineer's Project No.:**	B614
Contractor:	Fann Environmental, LLC	**Contractor's Project No.:**	
Project:	Jerome Wastewater Treatment Plant Improvements		
Contract:	Jerome Wastewater Treatment Plant Improvements		
Application No.:		**Application Date:**	
Application Period:	**From**	**to**	

1. Original Contract Price				$ -
2. Net change by Change Orders				$ -
3. Current Contract Price (Line 1 + Line 2)				$ -
4. Total Work completed and materials stored to date (Sum of Column G Lump Sum Total and Column J Unit Price Total)				$ -
5. Retainage				
a. _____	X	$ -	Work Completed =	$ -
b. _____	X	$ -	Stored Materials =	$ -
c. Total Retainage (Line 5.a + Line 5.b)				$ -
6. Amount eligible to date (Line 4 - Line 5.c)				$ -
7. Less previous payments (Line 6 from prior application)				
8. Amount due this application				$ -
9. Balance to finish, including retainage (Line 3 - Line 4 + Line 5.c)				$ -

Contractor's Certification

The undersigned Contractor certifies, to the best of its knowledge, the following:
(1) All previous progress payments received from Owner on account of Work done under the Contract have been applied on account to discharge Contractor's legitimate obligations incurred in connection with the Work covered by prior Applications for Payment;
(2) Title to all Work, materials and equipment incorporated in said Work, or otherwise listed in or covered by this Application for Payment, will pass to Owner at time of payment free and clear of all liens, security interests, and encumbrances (except such as are covered by a bond acceptable to Owner indemnifying Owner against any such liens, security interest, or encumbrances); and
(3) All the Work covered by this Application for Payment is in accordance with the Contract Documents and is not defective.

Contractor: _____

Signature: _____ **Date:** _____

Recommended by Engineer		**Approved by Owner**	
By:		**By:**	
Title:		**Title:**	
Date:		**Date:**	
Approved by Funding Agency			
By:		**By:**	
Title:		**Title:**	
Date:		**Date:**	

(c) 2018 National Society of Professional Engineers for EJCDC. All rights reserved.

Progress Estimate - Lump Sum Work

Contractor's Application for Payment

Owner:	Town of Jerome	**Owner's Project No.:**	N/A
Engineer:	PACE	**Engineer's Project No.:**	B614
Contractor:	Fann Environmental, LLC	**Contractor's Project No.:**	
Project:	Jerome Wastewater Treatment Plant Improvements		
Contract:	Jerome Wastewater Treatment Plant Improvements		

Application No.: _____ **Application Period:** **From** _____ **to** _____ **Application Date:** _____

A	B	C	D	E	F	G	H	I
			Work Completed					
Item No.	Description	Scheduled Value ($)	(D + E) From Previous Application ($)	This Period ($)	Materials Currently Stored (not in D or E) ($)	Work Completed and Materials Stored to Date (D + E + F) ($)	% of Scheduled Value (G / C) (%)	Balance to Finish (C - G) ($)
Original Contract								
						-		-
						-		-
						-		-
						-		-
						-		-
						-		-
						-		-
						-		-
						-		-
						-		-
						-		-
						-		-
						-		-
						-		-
						-		-
						-		-
						-		-
						-		-
						-		-
						-		-
						-		-
						-		-
	Original Contract Totals	$ -	$ -	$ -	$ -	$ -		$ -

EJCDC C-620 Contractor's Application for Payment
(c) 2018 National Society of Professional Engineers for EJCDC. All rights reserved.

Progress Estimate - Lump Sum Work

Contractor's Application for Payment

Owner:	Town of Jerome	**Owner's Project No.:**	N/A
Engineer:	PACE	**Engineer's Project No.:**	B614
Contractor:	Fann Environmental, LLC	**Contractor's Project No.:**	
Project:	Jerome Wastewater Treatment Plant Improvements		
Contract:	Jerome Wastewater Treatment Plant Improvements		

Application No.: _____ **Application Period:** **From** _____ **to** _____ **Application Date:** _____

A	B	C	D	E	F	G	H	I
			Work Completed					
Item No.	Description	Scheduled Value ($)	(D + E) From Previous Application ($)	This Period ($)	Materials Currently Stored (not in D or E) ($)	Work Completed and Materials Stored to Date (D + E + F) ($)	% of Scheduled Value (G / C) (%)	Balance to Finish (C - G) ($)
	Change Orders							
						-		-
						-		-
						-		-
						-		-
						-		-
						-		-
						-		-
						-		-
						-		-
						-		-
						-		-
						-		-
						-		-
						-		-
						-		-
						-		-
						-		-
						-		-
						-		-
						-		-
	Change Order Totals	$ -	$ -	$ -	$ -	$ -		$ -
	Original Contract and Change Orders							
	Project Totals	$ -	$ -	$ -	$ -	$ -		$ -

(c) 2018 National Society of Professional Engineers for EJCDC. All rights reserved.

Progress Estimate - Unit Price Work

Contractor's Application for Payment

Owner:	Town of Jerome	**Owner's Project No.:**	N/A
Engineer:	PACE	**Engineer's Project No.:**	B614
Contractor:	Fann Environmental, LLC	**Contractor's Project No.:**	
Project:	Jerome Wastewater Treatment Plant Improvements		
Contract:	Jerome Wastewater Treatment Plant Improvements		

Application No.: _____ **Application Period:** **From** _____ **to** _____ **Application Date:** _____

A	B	C	D	E	F	G	H	I	J	K	L
		Contract Information				Work Completed					
Bid Item No.	Description	Item Quantity	Units	Unit Price ($)	Value of Bid Item (C X E) ($)	Estimated Quantity Incorporated in the Work	Value of Work Completed to Date (E X G) ($)	Materials Currently Stored (not in G) ($)	Work Completed and Materials Stored to Date (H + I) ($)	% of Value of Item (J / F) (%)	Balance to Finish (F - J) ($)
Original Contract											
					-		-		-		-
					-		-		-		-
					-		-		-		-
					-		-		-		-
					-		-		-		-
					-		-		-		-
					-		-		-		-
					-		-		-		-
					-		-		-		-
					-		-		-		-
					-		-		-		-
					-		-		-		-
					-		-		-		-
					-		-		-		-
					-		-		-		-
					-		-		-		-
					-		-		-		-
					-		-		-		-
					-		-		-		-
					-		-		-		-
				Original Contract Totals	$ -		$ -	$ -	$ -		$ -

EJCDC C-620 Contractor's Application for Payment
(c) 2018 National Society of Professional Engineers for EJCDC. All rights reserved.

Progress Estimate - Unit Price Work

Contractor's Application for Payment

Owner: Town of Jerome
Engineer: PACE
Contractor: Fann Environmental, LLC
Project: Jerome Wastewater Treatment Plant Improvements
Contract: Jerome Wastewater Treatment Plant Improvements

Owner's Project No.: N/A
Engineer's Project No.: B614
Contractor's Project No.:

Application No.: _____ **Application Period:** **From** _____ **to** _____ **Application Date:** _____

A	B	C	D	E	F	G	H	I	J	K	L
		Contract Information				Work Completed					
Bid Item No.	Description	Item Quantity	Units	Unit Price ($)	Value of Bid Item (C X E) ($)	Estimated Quantity Incorporated in the Work	Value of Work Completed to Date (E X G) ($)	Materials Currently Stored (not in G) ($)	Work Completed and Materials Stored to Date (H + I) ($)	% of Value of Item (J / F) (%)	Balance to Finish (F - J) ($)
Change Orders											
					-		-		-		-
					-		-		-		-
					-		-		-		-
					-		-		-		-
					-		-		-		-
					-		-		-		-
					-		-		-		-
					-		-		-		-
					-		-		-		-
					-		-		-		-
					-		-		-		-
					-		-		-		-
					-		-		-		-
					-		-		-		-
					-		-		-		-
					-		-		-		-
					-		-		-		-
					-		-		-		-
					-		-		-		-
					-		-		-		-
				Change Order Totals	$ -		$ -	$ -	$ -		$ -
Original Contract and Change Orders											
				Project Totals	$ -		$ -	$ -	$ -		$ -

(c) 2018 National Society of Professional Engineers for EJCDC. All rights reserved.

Stored Materials Summary

Contractor's Application for Payment

Owner:	Town of Jerome	**Owner's Project No.:**	N/A
Engineer:	PACE	**Engineer's Project No.:**	B614
Contractor:	Fann Environmental, LLC	**Contractor's Project No.:**	
Project:	Jerome Wastewater Treatment Plant Improvements		
Contract:	Jerome Wastewater Treatment Plant Improvements		

Application No.: _____ **Application Period:** **From** _____ **to** _____ **Application Date:** _____

A	B	C	D	E	F	G	H	I	J	K	L	M
						Materials Stored			Incorporated in Work			
Item No. (Lump Sum Tab) or Bid Item No. (Unit Price Tab)	Supplier Invoice No.	Submittal No. (with Specification Section No.)	Description of Materials or Equipment Stored	Storage Location	Application No. When Materials Placed in Storage	Previous Amount Stored ($)	Amount Stored this Period ($)	Amount Stored to Date (G+H) ($)	Amount Previously Incorporated in the Work ($)	Amount Incorporated in the Work this Period ($)	Total Amount Incorporated in the Work (J+K) ($)	Materials Remaining in Storage (I-L) ($)
								-			-	-
								-			-	-
								-			-	-
								-			-	-
								-			-	-
								-			-	-
								-			-	-
								-			-	-
								-			-	-
								-			-	-
								-			-	-
								-			-	-
								-			-	-
								-			-	-
								-			-	-
								-			-	-
								-			-	-
								-			-	-
								-			-	-
								-			-	-
								-			-	-
								-			-	-
					Totals	$ -	$ -	$ -	$ -	$ -	$ -	$ -

(c) 2018 National Society of Professional Engineers for EJCDC. All rights reserved.

WORK CHANGE DIRECTIVE NO.: [Number of Work Change Directive]

Owner:	Town of Jerome	Owner's Project No.:	N/A
Engineer:	PACE	Engineer's Project No:	B614
Contractor:	Fann Environmental, LLC	Contractor's Project No.:	
Project:	Jerome Wastewater Treatment Plant Improvements		
Contract Name:	Jerome Wastewater Treatment Plant Improvements		
Date Issued:		Effective Date of Work Change Directive:	

Contractor is directed to proceed promptly with the following change(s):

Description:

[Description of the change to the Work]

Attachments:

[List documents related to the change to the Work]

Purpose for the Work Change Directive:

[Describe the purpose for the change to the Work]

Directive to proceed promptly with the Work described herein, prior to agreeing to change in Contract Price and Contract Time, is issued due to:

Notes to User—Check one or both of the following

☐ Non-agreement on pricing of proposed change. ☐ Necessity to proceed for schedule or other reasons.

Estimated Change in Contract Price and Contract Times (non-binding, preliminary):

Contract Price: $ _____ **[increase] [decrease] [not yet estimated]**.

Contract Time: _____ days **[increase] [decrease] [not yet estimated]**.

Basis of estimated change in Contract Price:

☐ Lump Sum ☐ Unit Price ☐ Cost of the Work ☐ Other

	Recommended by Engineer	Authorized by Owner
By:	_____	_____
Title:	_____	_____
Date:	_____	_____

EJCDC® C-940, Work Change Directive.
Copyright© 2018 National Society of Professional Engineers, American Council of Engineering Companies, and American Society of Civil Engineers. All rights reserved.

CHANGE ORDER NO.: [Number of Change Order]

Owner:	Town of Jerome	Owner's Project No.:	N/A
Engineer:	PACE	Engineer's Project No.:	B614
Contractor:	Fann Environmental, LLC	Contractor's Project No.:	
Project:	Jerome Wastewater Treatment Plant Improvements		
Contract Name:	Jerome Wastewater Treatment Plant Improvements		
Date Issued:		Effective Date of Change Order:	

The Contract is modified as follows upon execution of this Change Order:

Description:

[Description of the change]

Attachments:

[List documents related to the change]

Change in Contract Price	**Change in Contract Times [State Contract Times as either a specific date or a number of days]**
Original Contract Price: $ _____	Original Contract Times: Substantial Completion: _____ Ready for final payment: _____
[Increase] [Decrease] from previously approved Change Orders No. 1 to No. **[Number of previous Change Order]**: $ _____	**[Increase] [Decrease]** from previously approved Change Orders No.1 to No. **[Number of previous Change Order]**: Substantial Completion: _____ Ready for final payment: _____
Contract Price prior to this Change Order: $ _____	Contract Times prior to this Change Order: Substantial Completion: _____ Ready for final payment: _____
[Increase] [Decrease] this Change Order: $ _____	**[Increase] [Decrease]** this Change Order: Substantial Completion: _____ Ready for final payment: _____
Contract Price incorporating this Change Order: $ _____	Contract Times with all approved Change Orders: Substantial Completion: _____ Ready for final payment: _____

	Recommended by Engineer (if required)	Accepted by Contractor
By:	_____	_____
Title:	_____	_____
Date:	_____	_____
	Authorized by Owner	Approved by Funding Agency (if applicable)
By:	_____	_____
Title:	_____	_____
Date:	_____	_____

EJCDC® C-941, Change Order EJCDC® C-941, Change Order, Rev.1.
Copyright© 2018 National Society of Professional Engineers, American Council of Engineering Companies and American Society of Civil Engineers. All rights reserved.

FIELD ORDER NO.: [Number of Field Order]

Owner:	Town of Jerome	Owner's Project No.:	N/A
Engineer:	PACE	Engineer's Project No.:	B614
Contractor:	Fann Environmental, LLC	Contractor's Project No.:	
Project:	Jerome Wastewater Treatment Plant Improvements		
Contract Name:	Jerome Wastewater Treatment Plant Improvements		
Date Issued:		Effective Date of Field Order:	

Contractor is hereby directed to promptly perform the Work described in this Field Order, issued in accordance with Paragraph 11.04 of the General Conditions, for minor changes in the Work without changes in Contract Price or Contract Times. If Contractor considers that a change in Contract Price or Contract Times is required, submit a Change Proposal before proceeding with this Work.

Reference:

Specification Section(s):

Drawing(s) / Details (s):

Description:

[Description of the change to the Work]

Attachments:

[List documents supporting change]

Issued by Engineer

By: _____

Title: _____

Date: _____

Copyright© 2018 National Society of Professional Engineers, American Council of Engineering Companies and American Society of Civil Engineers. All rights reserved.

GENERAL (PRIME) CONTRACTOR'S CERTIFICATION OF COMPLIANCE

Notes to User: This exhibit is the sample General (Prime) Contractor's Certification of Compliance with the American Iron and Steel requirements to be provided by all General (Prime) Contractors to Engineer for delivery to the Owner at Substantial Completion.

GENERAL (PRIME) CONTRACTOR'S CERTIFICATION OF COMPLIANCE WITH PROVISIONS OF THE AMERICAN IRON AND STEEL REQUIREMENTS OF SECTION 746 OF TITLE VII OF THE CONSOLIDATED APPROPRIATIONS ACT OF 2017 (DIVISION A - AGRICULTURE, RURAL DEVELOPMENT, FOOD AND DRUG ADMINISTRATION, AND RELATED AGENCIES APPROPRIATIONS ACT, 2017) AND SUBSEQUENT STATUTES MANDATING DOMESTIC PREFERENCE

DATE:

RE: PROJECT NAME
APPLICANT
CONTRACT NUMBER

I hereby certify that to the best of my knowledge and belief all Iron and Steel products installed for this project by my company and by any and all subcontractors and Manufacturers my company has contracted with for this project comply with Section 746 of Title VII of the Consolidated Appropriations Act of 2017 (Division A - Agriculture, Rural Development, Food and Drug Administration, and Related Agencies Appropriations Act, 2017) and subsequent statutes mandating domestic preference or are the subject of a waiver approved by the Secretary of Agriculture or designee.

_____
Name of Construction Company (PRINT)

_____
By Authorized Representative (SIGNATURE)

_____
Title

MANUFACTURER'S CERTIFICATION OF COMPLIANCE

Notes to User: This exhibit is the sample Manufacturer's Certification of Compliance with the American Iron and Steel requirements to be provided by all Manufacturers of American Iron and Steel covered items, to be submitted by Contractor to the Engineer with the corresponding Shop Drawing submittal for delivery to the Owner at Substantial Completion.

EXAMPLE OF A MANUFACTURER'S CERTIFICATION OF COMPLIANCE WITH PROVISIONS OF THE AMERICAN IRON AND STEEL (AIS) REQUIREMENTS OF SECTION 746 OF TITLE VII OF THE CONSOLIDATED APPROPRIATIONS ACT OF 2017 (DIVISION A - AGRICULTURE, RURAL DEVELOPMENT, FOOD AND DRUG ADMINISTRATION, AND RELATED AGENCIES APPROPRIATIONS ACT, 2017) AND SUBSEQUENT STATUTES MANDATING DOMESTIC PREFERENCE

Date:

Company Name:

Company Address:

Subject: American Iron and Steel (AIS) Certification for Project (X), Owner's Name, and Contract Number

I, (company representative), certify that the (melting, bending, galvanizing, cutting, etc.) processes for (manufacturing or fabricating) the following products and/or material shipped or provided for the subject project is in full compliance with the AIS requirement as mandated by Section 746 of Title VII of the Consolidated Appropriations Act of 2017 (Division A - Agriculture, Rural Development, Food and Drug Administration, and Related Agencies Appropriations Act, 2017) and subsequent statutes mandating domestic preference.
Item, Products and/or Materials, and location of delivery (City, State):

1.

2.
Such processes for AIS took place at the following location:

_____
(City, State)

_____
Authorized Company Representative Signature

Notes: Authorized signature will be Manufacturer's representative, not the material distributor or Supplier. If any of the above compliance statements change while providing materials to this project, please immediately notify the person(s) who is requesting to use your product(s).

CERTIFICATE OF SUBSTANTIAL COMPLETION

Owner:	Town of Jerome	Owner's Project No.:	N/A
Engineer:	PACE	Engineer's Project No.:	B614
Contractor:	Fann Environmental, LLC	Contractor's Project No.:	
Project:	Jerome Wastewater Treatment Plant Improvements		
Contract Name:	Jerome Wastewater Treatment Plant Improvements		

This ☐ Preliminary ☐ Final Certificate of Substantial Completion applies to:

☐ All Work ☐ The following specified portions of the Work:

[Describe the portion of the work for which Certificate of Substantial Completion is issued]

Date of Substantial Completion: **[Enter date, as determined by Engineer]**

The Work to which this Certificate applies has been inspected by authorized representatives of Owner, Contractor, and Engineer, and found to be substantially complete. The Date of Substantial Completion of the Work or portion thereof designated above is hereby established, subject to the provisions of the Contract pertaining to Substantial Completion. The date of Substantial Completion in the final Certificate of Substantial Completion marks the commencement of the contractual correction period and applicable warranties required by the Contract.

A punch list of items to be completed or corrected is attached to this Certificate. This list may not be all-inclusive, and the failure to include any items on such list does not alter the responsibility of the Contractor to complete all Work in accordance with the Contract Documents.

Amendments of contractual responsibilities recorded in this Certificate should be the product of mutual agreement of Owner and Contractor; see Paragraph 15.03.D of the General Conditions.

The responsibilities between Owner and Contractor for security, operation, safety, maintenance, heat, utilities, insurance, and warranties upon Owner's use or occupancy of the Work must be as provided in the Contract, except as amended as follows:

Amendments to Owner's Responsibilities: ☐ None ☐ As follows:

[List amendments to Owner's Responsibilities]

Amendments to Contractor's Responsibilities: ☐ None ☐ As follows:

[List amendments to Contractor's Responsibilities]

The following documents are attached to and made a part of this Certificate:

[List attachments such as punch list; other documents]

This Certificate does not constitute an acceptance of Work not in accordance with the Contract Documents, nor is it a release of Contractor's obligation to complete the Work in accordance with the Contract Documents.

Engineer

By *(signature)*: _____

Name *(printed)*: _____

Title: _____

EJCDC® C-625, Certificate of Substantial Completion.
Copyright© 2018 National Society of Professional Engineers, American Council of Engineering Companies, and American Society of Civil Engineers. All rights reserved.

NOTICE OF ACCEPTABILITY OF WORK

Owner:	Town of Jerome	Owner's Project No.:	N/A
Engineer:	PACE	Engineer's Project No.:	B614
Contractor:	Fann Environmental, LLC	Contractor's Project No.:	
Project:	Jerome Wastewater Treatment Plant Improvements		
Contract Name:	Jerome Wastewater Treatment Plant Improvements		
Notice Date:	Effective Date of the Construction Contract:		

The Engineer hereby gives notice to the Owner and Contractor that Engineer recommends final payment to Contractor, and that the Work furnished and performed by Contractor under the Construction Contract is acceptable, expressly subject to the provisions of the Construction Contract's Contract Documents ("Contract Documents") and of the Agreement between Owner and Engineer for Professional Services dated **July 28, 2022** ("Owner-Engineer Agreement"). This Notice of Acceptability of Work (Notice) is made expressly subject to the following terms and conditions to which all who receive and rely on said Notice agree:

1. This Notice has been prepared with the skill and care ordinarily used by members of the engineering profession practicing under similar conditions at the same time and in the same locality.
2. This Notice reflects and is an expression of the Engineer's professional opinion.
3. This Notice has been prepared to the best of Engineer's knowledge, information, and belief as of the Notice Date.
4. This Notice is based entirely on and expressly limited by the scope of services Engineer has been employed by Owner to perform or furnish during construction of the Project (including observation of the Contractor's Work) under the Owner-Engineer Agreement, and applies only to facts that are within Engineer's knowledge or could reasonably have been ascertained by Engineer as a result of carrying out the responsibilities specifically assigned to Engineer under such Owner-Engineer Agreement.
5. This Notice is not a guarantee or warranty of Contractor's performance under the Construction Contract, an acceptance of Work that is not in accordance with the Contract Documents, including but not limited to defective Work discovered after final inspection, nor an assumption of responsibility for any failure of Contractor to furnish and perform the Work thereunder in accordance with the Contract Documents, or to otherwise comply with the Contract Documents or the terms of any special guarantees specified therein.
6. This Notice does not relieve Contractor of any surviving obligations under the Construction Contract, and is subject to Owner's reservations of rights with respect to completion and final payment.

Engineer

By *(signature)*: _____

Name *(printed)*: _____

Title: _____

EJCDC® C-626, Notice of Acceptability of Work.
Copyright© 2018 National Society of Professional Engineers, American Council of Engineering Companies, and American Society of Civil Engineers. All rights reserved.

Town of Jerome

WASTEWATER TREATMENT PLANT IMPROVEMENTS

TECHNICAL SPECIFICATIONS





PREPARED FOR:

Town of Jerome
600 Clark Street
Jerome, AZ 86331

PREPARED BY:

PACE
Advanced Water Engineering

8723 E. Via de Commercio #A-204
Scottsdale, AZ 85258
480.991.3595 | www.pacewate

#B614 | November

Technical Specifications

Town of Jerome
Wastewater Treatment Plant Improvements

November 2025

Prepared For:

Town of Jerome
600 Clark Street
P.O. Box 335
Jerome, AZ 86331

Prepared By:

Pacific Advanced Civil Engineering, Inc.
8723 E Via de Commercio #A-204, Scottsdale, AZ 85258
*P:*480-991-3595 *F:*480-751-1810

Registered Professional Engineer (Civil)
CERTIFICATE NO.
70097
TAYLOR B.
PIERCE
Date Signed: 11/20/25
ARIZONA, U.S.A.

Contact Person:

Taylor Pierce, PE
Mike Krebs, PE

PACE JN #B614

SECTION 00 0110 – CONTRACT DOCUMENTS TABLE OF CONTENTS

TECHNICAL SPECIFICATIONS

DIVISION 00 – PROCUREMENT AND CONTRACTING REQUIREMENTS

00 0110 Table of Contents
00 7000 Conditions of the Contract

DIVISION 01 - GENERAL REQUIREMENTS

01 1100 Summary of Work
01 1400 Work Restrictions
01 2000 Price and Payment Procedures
01 3216 Construction Progress Schedules
01 3300 Submittal Procedures
01 3529 Health, Safety, and Emergency Response Procedures
01 4219 Reference Standards
01 4333 Manufacturer's Field Services
01 4500 Quality Control
01 5626 Temporary Fencing
01 5713 Temporary Erosion and Sediment Control
01 5719 Temporary Environmental Controls
01 5726 Site Watering for Dust Control
01 7113 Mobilization
01 7123 Field Engineering
01 7700 Closeout Procedures
01 7823 Operation and Maintenance Data
01 7839 Project Record Documents
01 7900 Demonstration and Training

DIVISION 02 – EXISTING CONDITIONS

02 0100 Maintenance of Existing Conditions
02 4000 Demolition and Structure Moving
02 9600 Temporary Bypass Piping Systems

DIVISION 03 – CONCRETE

03 1500 Concrete Accessories
03 1516 Concrete Construction Joints
03 2000 Concrete Reinforcing
03 3000 Cast-in-Place Concrete
03 4110 Precast Concrete Utility Structures
03 6000 Grouting
03 6423 Epoxy Injection Grouting

DIVISION 04 – MASONRY

04 2200 Concrete Unit Masonry

DIVISION 05 – METALS

05 1213 Structural Steel
05 3123 Metal Roof Decking
05 5013 Metal Fabrications
05 5100 Metal Stairs
05 5133 Metal Ladders
05 5213 Pipe and Tube Railings
05 5300 Metal Gratings
05 5410 Safety Hatches

DIVISION 06 – WOODS AND PLASTICS

06 1000 Rough Carpentry

DIVISION 07 – THERMAL AND MOISTURE PROTECTION

07 2100 Thermal Insulation
07 5400 Thermoplastic Membrane Roofing
07 6100 Sheet Metal Roofing
07 6200 Sheet Metal Flashing and Trim
07 7200 Roof Accessories
07 9200 Joint Sealants

DIVISION 08 – OPENINGS

08 1100 Metal Doors and Frames
08 5113 Aluminum Windows
08 7100 Door Hardware
08 80 00 Glazing
08 9100 Louvers

DIVISION 09 – FINISHES

09 2200 Supports for Plaster and Gypsum Board
09 2900 Gypsum Board
09 3000 Ceramic Tile
09 5113 Acoustical Panel Ceilings
09 5300 Acoustical Ceiling Suspension Assemblies
09 9100 Painting
09 9700 Special Coatings

SECTION 00 0110 – CONTRACT DOCUMENTS TABLE OF CONTENTS

DIVISION 10 – SPECIALTIES

10 1400 Signage
10 2813 Toilet Accessories
10 4416 Fire Extinguishers

DIVISION 11 – EQUIPMENT

11 53 00 Lab Equipment

DIVISION 12 – FURNISHINGS

12 3553.13 Metal Laboratory Casework

DIVISION 22 – PLUMBING

22 0529 Hangers and Supports for Plumbing Piping and Equipment
22 1000 Plumbing Piping

DIVISION 23 – HEATING, VENTILATING, AND AIR CONDITIONING (HVAC)

23 0000 Heating, Ventilating, and Air Conditioning (HVAC)

DIVISION 26 – ELECTRICAL

26 0126 Maintenance Testing of Electrical Systems
26 0500 Common Work Results for Electrical
26 0519 Low-Voltage Electrical Power Cables
26 0523 Instrumentation and Communication Cables
26 0526 Grounding and Bonding for Electrical Systems
26 0529 Hangers and Supports for Electrical Systems
26 0533.13 Conduit for Electrical Systems
26 0533.16 Boxes for Electrical Systems
26 0553 Identification for Electrical Systems
26 0573 Overcurrent Protective Device Coordination Study
26 0583 Wiring Connections
26 0916 Electrical Controls, Relays, and Alarms
26 2200 Low-Voltage Transformers
26 2413 Switchboards
26 2416 Panelboards
26 2726 Wiring Devices
26 2733 Power Distribution Units
26 2813 Fuses
26 2816 Enclosed Switches and Circuit Breakers
26 2913 Enclosed Motor Controllers
26 3213 Generator Set – Diesel
26 3353 Static Uninterruptible Power Supply

SECTION 00 0110 – CONTRACT DOCUMENTS TABLE OF CONTENTS

DIVISION 26 – ELECTRICAL, Continued

26 3600 Automatic Transfer
26 4100 Facility Lightning Protection
26 4313 Surge Protective Devices for Low-Voltage Electrical Power Circuits
26 5000 Lighting

DIVISION 28 – ELECTRONIC SAFETY AND SECURITY

28 3146 Fire Detection and Alarm

DIVISION 31 – EARTHWORK

31 0000 Earthwork
31 0519.16 Geomembrane for Earthwork
31 1000 Site Clearing and Grubbing
31 2319 Dewatering
31 2333 Trenching and Backfilling
31 2524 Rockfall Barrier
31 3700 Riprap

DIVISION 32 – EXTERIOR IMPROVEMENTS

32 1216 Asphalt Paving
32 1313 Concrete Paving
32 1600 Curbs, Gutter, Sidewalks, and Driveways
32 3113 Chain Link Fences and Gates

DIVISION 33 – UTILITIES

33 0112 Hydrostatic Testing
33 0130.13 Sewer and Manhole Testing
33 0519 Ductile-Iron Utility Pipe
33 0524.13 Steel Pipe and Tubing for Air and Gas Service
33 0531 Polyvinyl Chloride Pipe
33 0531.19 Fusible Polyvinyl Chloride Pipe
33 0561 Concrete Manholes
33 3216 Packaged Utility Lift Stations

DIVISION 40 – PROCESS INTEGRATION

40 0500.13 Common Work Results for Process Piping
40 0513.53 Ductile, Malleable, and Cast-Iron Alloys Process Piping
40 0523.06 Weir Gates
40 0531 Plastic Pipe and Tubing
40 0533 High Density Polyethylene Solid Wall Pipe
40 0551 Common Work Results for Process Valves

SECTION 00 0110 – CONTRACT DOCUMENTS TABLE OF CONTENTS

DIVISION 40 – PROCESS INTEGRATION, Continued

40 0557 Actuators for Process Valves and Gates
40 0561 Gate Valves
40 0562 Plug Valves
40 0563 Ball Valves
40 0564 Butterfly Valves
40 0565 Check Valves
40 0567 Specialized Pressure and Flow Control Valves
40 0573 Miscellaneous Process Valves
40 0597 Identification for Process Piping
40 4200 Process Piping and Equipment Insulation
40 6113 Instrumentation and Control for Process Systems
40 6196 Process Control Descriptions
40 6653 Radio Communications Equipment
40 6700 Local Control Panels
40 7000 Field Instrumentation

DIVISION 41 – MATERIAL PROCESS & HANDLING EQUIPMENT

41 2200 Cranes and Hoists

DIVISION 43 – PROCESS HANDLING AND STORAGE EQUIPMENT

43 2513 Submersible Sewage Pumps

DIVISION 46 – WATER AND WASTEWATER EQUIPMENT

46 21 11 Climber-Type Bar Screens
46 36 53 Chemical Tablet Feeding Equipment
46 53 53 Sequencing Batch Reactor Equipment
46 76 00 Sludge Dewatering Equipment

APPENDICES

Appendix A – Geotechnical Evaluation
Appendix B – MAG Standard Specifications

END OF SECTION

SECTION 00 7000 – CONDITIONS OF THE CONTRACT

PART 1 – GENERAL

1.01 CONTRACT DOCUMENTS

The Contract Documents which constitute the contract between the OWNER and the CONTRACTOR with regard to the subject matter as set forth in Section I of such contract ("Contract Agreement") and include the Contract Agreement, plans, drawings, and the technical specifications.

All terms and conditions established in the Contract Agreement shall supersede all general conditions of these specifications to be followed in the event of any conflict or discrepancies.

1.02 DEFINITIONS AND MEANINGS OF TERMS

Whenever in the Contract Documents the following terms or pronouns referring to them are used, the intent and meaning shall be interpreted as follows which shall be applicable to both the singular and plural thereof:

A. The Contract shall mean the Contract executed by the OWNER and the CONTRACTOR, of which these General Conditions form a part; the terms Contract and Agreement are synonymous.

B. The term OWNER shall mean the respective party to the Contract; the OWNER being the Town of Jerome. The term OWNER may also mean consultants, engineers, or other professionals contracted by the OWNER to review, supervise, or consult on the project.

C. The term County shall mean Yavapai County, AZ.

D. The term CONTRACTOR shall mean the respective party to the contract.

E. The term SUBCONTRACTOR shall mean any individual, partnership or corporation having a direct contract with the CONTRACTOR to perform any part of the work.

F. The term ENGINEER shall mean Pacific Advanced Civil Engineering, Inc. (PACE).

G. Addenda shall mean written or graphic instruments issued prior to the execution of the Agreement which modify or interpret the Contract Documents, Final Design Plans, by additions, deletions, clarifications, or corrections.

H. Bonds shall mean Performance and Payment Bonds and other instruments of security, furnished by the CONTRACTOR and its surety in accordance with the Contract Documents.

I. Change Order shall mean a written order to the CONTRACTOR authorizing an addition, deletion, or revision in the WORK within the general scope of the Contract Documents, or authorizing an adjustment in the Contract price or Contract time.

J. Contractual Agreement shall mean the signed agreement between the OWNER and the CONTRACTOR for the work intended.

K. Contract Documents shall have the meaning described in Section 1.01 herein.

L. Contract price shall mean the total monies payable to the CONTRACTOR under the terms and conditions of the Contract Documents.

M. Contract time in days shall mean the number of consecutive calendar days stated in the Contract Documents for the completion of the Work.

N. Drawings shall mean the part of the Contract Documents, which show the characteristics and scope of the Work to be performed and which have been prepared or approved by the ENGINEER.

O. Notice to proceed shall mean written communication issued by the OWNER to the CONTRACTOR authorizing him to proceed with the Work and establishing the date of commencement of the Work.

P. Project shall mean the undertaking to be performed as provided in the Contract Documents.

Q. Submittals shall mean all drawings, diagrams, illustrations, brochures, schedules, and other data which are prepared by the CONTRACTOR, a subcontractor, manufacturer, supplier, or distributor, which illustrate how specific portions of the Work shall be fabricated or installed; the terms shop drawings and submittals are synonymous.

R. Specifications shall mean a part of the Contract Documents consisting of written descriptions of a technical nature of materials, equipment, construction systems, standards, and workmanship.

S. Substantial completion shall have the meaning defined in the Contract Agreement.

T. Suppliers shall mean any person, supplier or organization who supplies materials or equipment for the Work, including that fabricated to a special design, but who does not perform labor at the site.

U. Work shall mean all (i) obligations, responsibilities and duties undertaken by the CONTRACTOR in order to successfully construct, complete and operate (for Startup Completion) the Project, including all labor, materials, equipment and other incidentals, and the furnishing thereof, (ii) Design and Engineering Services, (iii) Training Services, and (iv) Initial Operations, pursuant to the Contract Documents.

V. Written notice shall mean any notice to any party of the Agreement relative to any part of this Agreement in writing and considered delivered and the service thereof completed, when posted by certified or registered mail to the said party at his last given address, or delivered in person to said party of his authorized representative on the Work.

W. Engineering Supplemental Information (ESI) shall mean written communications issued by the ENGINEER to the CONTRACTOR providing the CONTRACTOR with additional clarifications of the Contract Documents that the ENGINEER deems necessary to ensure the design intent.

X. Request for Information (RFI) shall mean written communications issued by the CONTRACTOR to the ENGINEER requesting additional information or clarification regarding a specific item in the Contract Documents.

1.03 CONTRACTOR'S RESPONSIBILITY

A. General: It is the responsibility of the CONTRACTOR and each subcontractor to visit the site and satisfy himself as to the various existing conditions affecting the work as required.

B. Underground Utilities: The information shown on the drawings was obtained from drawings furnished by the OWNER, and surveys furnished to the OWNER. The CONTRACTOR shall make such investigation as deemed necessary to be satisfied as to the actual location, size, type of material, buried depth, and other factors relating to these services.

1.04 PERMITS, FEES, AND SALES TAX

A. The CONTRACTOR shall submit the required fees, drawings, and application for the applicable permits prior to commencement of work.

B. A summary of local permits are as follows:
   1. Yavapai County
      i. Building Permit
      ii. Grading Permit

2. SWPPP – NOI, BMP Plan & Monitoring Plan in accordance with these Specifications.
3. Dust Control – in accordance with these Specifications.
4. This Permit summary is provided for convenience to the CONTRACTOR and does not relieve the CONTRACTOR from the responsibility of obtaining any additional required Permits not listed for the construction of this facility.

C. CONTRACTOR shall pay all sales tax applicable to the work.

1.05 PRE-CONSTRUCTION MEETING

A. General: Before issuance of Notice to Proceed, a pre-construction meeting shall be held at the location, date and time designated by ENGINEER and OWNER. Attendees shall include the ENGINEER, OWNER's representatives, General CONTRACTOR's project manager and field superintendent, and representatives from each subcontractor for the project as appropriate.

1.06 CONSTRUCTION PROGRESS MEETINGS

A. Progress meetings shall be held according to the agreed upon schedule. All matters bearing on progress and performance of the work since preceding progress meeting shall be discussed and resolved including, without limitation, any previously unresolved matters, deficiencies in the work or methods being employed for the work, and problems, difficulties, or delays which may be encountered.

1.07 PROTECTION OF WORK

A. CONTRACTOR shall provide all protection required to ensure that all work completed will not be harmed.

B. The CONTRACTOR may at his option and expense install any lawful security measures he deems necessary to protect his materials, equipment, or finished work. Type of security devices or quantity shall be the sole responsibility of the CONTRACTOR. The CONTRACTOR is to provide security and protect the project until the OWNER has occupied the space or OWNER has accepted the space.

C. Protection:
1. The CONTRACTOR shall be solely responsibility for the protection of all materials and work.
2. The CONTRACTOR shall include in his proposal the cost of any temporary partitions, sheathing, plastic covering, etc., as may be required to maintain affected areas. Remove all such temporary work at the proper time during the construction period and repair all damage related to same.
3. The CONTRACTOR is solely responsible for the protection of the area in which work is being performed.
4. Provide construction fencing as required to secure the site in accordance with these Specifications.

1.08 ACCESS TO SITE

A. All access to the site by the General CONTRACTOR, Subcontractors, workmen, material/equipment suppliers, etc., shall be via approved access locations as designated by the OWNER. All vehicular or equipment activity shall be strictly confined to the construction limits as indicated by OWNER.

B. Remove all temporary construction and temporary facilities at close of the job or when no longer needed.

1.09 MATERIALS TESTING

A. All materials to be incorporated into the work shall be subject to sampling, testing, and approval as required by specifications. OWNER shall be responsible for retaining the services of an independent testing agency for special inspections.

B. All materials and/or equipment shall be handled in such a manner as to preserve their quality and fitness for the work.

C. Unless otherwise specified, samples and tests shall be made in accordance with either: The Standard Methods of AASHTO, ASTM, ASME, or ADOT which were in effect and published at the time of advertising for bids. The laboratory responsible for the test(s) shall furnish at least one copy of the test results to the CONTRACTOR, the ENGINEER, and to the appropriate material supplier.

D. All materials and/or equipment not conforming to the requirements of the Specifications, whether in place or not, will be rejected. Rejected materials and/or equipment shall be removed immediately from the site of work unless otherwise permitted by the ENGINEER. No rejected material and/or equipment, the defects of which have been subsequently corrected, shall be used until approved in writing by the ENGINEER. CONTRACTOR shall be responsible for re-testing of all rejected materials.

1.10 SPECIAL INSPECTIONS

A. Various categories for inspection/observation of work progress during the course of construction are listed, but not limited to specifications and notes in the drawings. The OWNER requires on-site observation of the work at these various stages prior to covering the work. A list of such inspections will be reviewed at the Pre-Construction Conference and subsequent job meetings, and it is understood that the CONTRACTOR will not cover work until such observation has been completed. The OWNER and OWNER representatives will be responsible for reasonable cooperation with CONTRACTOR requests for observation of the work. The CONTRACTOR shall include anticipated observation requests at weekly update of scheduled activities.

1.11 PRIOR APPROVALS

A. If the General or Prime CONTRACTOR wishes to use items of equipment and/or materials other than those identified in the drawings or specifications, a written request for approval shall be submitted to the ENGINEER prior to the confirmation of contract price. Any request submitted after this time are not under obligation to be accepted. Request from subcontractors will not be considered.

B. Proposed substitutions that have not received prior approval are undertaken at the CONTRACTOR’s risk to be deemed equivalent during the construction submittal process.

C. Each request shall include all basic data and characteristics clearly legible. The specified item as well as the proposed item shall be formatted in such manner that a direct comparison can be readily made. ENGINEER shall not be required to perform research to accomplish the comparison. It is the bidder’s responsibility to submit complete descriptive and technical information for the ENGINEER and OWNER to perform a complete and proper appraisal.

D. If alternate manufacturers are accepted, the CONTRACTOR shall be responsible for any and all re-design or re-engineering required to accommodate alternate products. Change order proposals that add cost to the project as the result of redesign requirements for alternate manufacturers, or as the result of alternate manufacturers that do not meet the requirements of the construction documents, will not be accepted.

1.12 FINAL DESIGN PLANS

A. The intent of the Final Design Plans is that the CONTRACTOR shall furnish all labor, materials, tools, equipment, and transportation necessary for the proper execution of the Work in accordance with the Contract Documents and all incidental work necessary to complete the project in an acceptable manner, ready for use, occupancy, or operation by the OWNER.

B. The CONTRACTOR shall keep one set of the Final Design Plans on the site of the work. This set shall be kept current by the addition of all reviewed changes, addenda, and amendments thereto.

C. The Final Design Plans are intended to be explanatory to each other, but should any discrepancy appear or any misunderstanding arise as to the importance of anything contained in either, the CONTRACTOR shall obtain the necessary interpretation from the ENGINEER. Corrections of errors or omissions in the Final Design Plans may be made by the CONTRACTOR; when such corrections are necessary for the proper fulfillment of their intention. However, any changes or corrections to be performed after Notice to Proceed shall require the approval of both the ENGINEER and the CONTRACTOR.

D. All work or materials shown on the Plans and not mentioned in the Specifications, or any work specified and not shown on the Plans, shall be furnished, performed, and done by the CONTRACTOR as if same were both mentioned in the Specifications and shown on the Drawings. Conflicts or discrepancies within the plans and/or specifications and between the plans and specifications, the stricter interpretation shall apply unless approved by the Engineer of Record.

1.13 SUBMITTAL/SHOP DRAWINGS

A. The CONTRACTOR shall submit shop and working drawings of concrete reinforcement, structural details, piping layout, wiring, materials, and equipment fabricated especially for the Contract, and materials and equipment for which such drawings are specifically requested within these Contract Documents.

B. Such drawings shall show the principal dimensions, weight, structural and operating features, space required, clearances, type and/or brand of finish or shop coat, grease fittings, etc. depending on the subject of the drawing. When it is customary to do so, when the dimensions are of particular importance, or when so specified, the drawings shall be certified by the manufacturer or fabricator as correct for the Contract.

C. When so specified or if considered by the ENGINEER to be acceptable, manufacturer's specifications, catalog data, descriptive matter, illustrations, etc., may be submitted in place of shop and working drawings. In such case, the requirements shall be as specified for shop and working drawings, insofar as possible, except that the submission shall be per Section 01 3300 – Submittal Procedures of these Specifications.

D. No material or equipment shall be purchased or fabricated especially for the Contract until the required shop and working drawings have been submitted as herein above provided and reviewed for conformance to the Contract requirements by the ENGINEER. All such materials and equipment and the work involved in their installation or incorporation into the Work shall then be as shown in and represented by said drawings.

E. Until the necessary review has been made, the CONTRACTOR shall not proceed with any construction portion of the Work, the design or details of work, materials, equipment, or other features for which review is required.

F. All shop and working drawings shall be prepared on standard size, 11-inch by 17-inch sheets except those, which are made by changing existing standard shop or working drawings. All drawings shall be clearly marked with the names of the Project Name,

CONTRACTOR, and building, equipment, or structure to which the drawing applies, and shall be suitably numbered.

G. The review of shop and working drawings hereunder will be general only, and nothing contained in these general conditions shall relieve, diminish, or alter in any respect the responsibilities of the CONTRACTOR under the Contract Documents and in particular, the specific responsibility of the CONTRACTOR for details and dimensions necessary for proper fitting and construction of the work as required by the Contract and for achieving the result and performance specified there under.

1.14 STANDARD SPECIFICATIONS

A. Where standard specifications, such as those of the American Society for Testing and Materials, the American National Standards Institute, the American Water Works Association, the American Association of State Highway and Transportation Officials, the Federal Aviation Agency, the Federal Specifications, etc. are referred to in the Specifications and Contract Documents and on the Drawings, said references shall be construed to mean the latest amended and/or revised versions of the said standard or tentative specification.

1.15 SPECIFIC BRANDS, MAKERS OR MANUFACTURERS

A. Wherever in the Specifications one or more specific brands, makers or manufacturers are set out and qualified by the "or equal" clause, it is intended to denote the quality standard of the article desired, but unless otherwise noted does not restrict the CONTRACTOR to the specific brand, make or manufacturer.

1.16 "OR EQUAL" CLAUSE

A. Whenever the words "or approved equal," or "or equal," or "similar to," etc., appear in the Specifications, they shall be interpreted to mean an item of material or equipment that, in the opinion of the ENGINEER is similar to that named, suited to the same use, capable of performing the same function as that named, has a record of service equal to that named, and is equal in quality, capacity and/or efficiency to that named.

B. For an “approved equal” equipment, the CONTRACTOR shall submit a Submittal Review Deposit, in the form of a certified bank check in the amount of $2,000 made payable to the OWNER. This deposit will be used for Engineer’s review of substitute equipment. The Engineer’s review time will be deducted at a rate of $l50.00 per hour for reviewing substitution requests, regardless of whether the substitution is approved or rejected. The OWNER will return any unused funds to the petitioner within 30 days of the bid date.

1.17 SAFETY

A. The CONTRACTOR shall take all necessary precautions and provide all necessary safeguards to prevent personal injury and property damage. The CONTRACTOR shall provide protection for all persons including but not limited to his employees and employees of other contractors or subcontractors; members of the public; and employees, agents, and representatives of the OWNER, and regulatory agencies that may be on or about the Work. The CONTRACTOR shall provide protection for all public and private property including but not limited to structures, pipes, and utilities, above and below the ground.

B. The CONTRACTOR shall provide and maintain all necessary safety equipment such as fences, barriers, signs, lights, walkways, guards and fire prevention and fire-fighting equipment and shall take such other action as is required to fulfill his obligations under this subsection.

C. The CONTRACTOR shall comply with all federal, state, and local laws, ordinances, rules and regulations and lawful orders of authorities having jurisdiction for the safety of persons and protection of property.

D. The CONTRACTOR shall designate a responsible member of his organization at the site whose duty shall be the prevention of accidents. This responsible person shall have the authority to take immediate action to correct unsafe or hazardous conditions and to enforce safety precautions and programs.

1.18 MATERIALS – SAMPLES – REVIEW

A. Unless otherwise expressly provided on the Drawings or in any of the other Contract Documents, only new materials and equipment shall be incorporated in the Work. All materials and equipment furnished by the CONTRACTOR to be incorporated in the Work shall be subject to the review of the ENGINEER. No material shall be processed or fabricated for the Work or delivered to the Work site without prior concurrence of the ENGINEER.

B. Facilities and labor for the storage, handling, and inspection of all materials and equipment shall be the responsibility of the CONTRACTOR. Defective materials and equipment shall be identified to the ENGINEER and removed immediately from the site of the Work.

C. If the ENGINEER so requires, either prior to or after commencement of the Work, the CONTRACTOR shall submit samples of materials for such special tests, as the ENGINEER deems necessary to demonstrate that they conform to the Specifications.

1.19 SANITARY FACILITIES

A. The CONTRACTOR shall provide adequate sanitary facilities for the use of those employed on the Work. Such facilities shall be made available when the first employees arrive on the site of the Work, shall be properly secluded from public observation, and shall be constructed and maintained during the progress of the Work in suitable numbers and at such points and in such manner as may be required.

B. The CONTRACTOR shall maintain the sanitary facilities in a satisfactory and sanitary condition at all times and shall enforce their use. He shall rigorously prohibit the committing of nuisances on the site of the Work, on the lands of the OWNER, or on adjacent property.

1.20 EMPLOYMENT QUALIFICATIONS

A. No person under the age of eighteen (18) years and no convict labor shall be employed to perform any work under this Contract. No person whose age or physical condition is such as to make his employment dangerous to his health or safety or to the health or safety of others shall be employed to perform any work under this Contract, provided that this shall not operate against the employment of physically handicapped persons, otherwise employable, where such persons may be safely assigned to work which they can ably perform. There shall be no discrimination because of race, creed, color, sex, or political affiliation in the employment of persons for work under this Contract.

1.21 WORK ON "PRIVATE PROPERTY"

A. Private property is defined as property other than that belonging to the OWNER. Highway and railroad rights-of-way, public parks, school yards and other such properties shall be considered "private properties" for the purpose of this Paragraph.

B. In connection with water line, sewer line, gas line or similar work performed on "private property," the CONTRACTOR shall confine his equipment, the storage of materials and the operations of his workman to the limits indicated on the Drawings, or to lands and rights-of-way provided for the Project by the OWNER, and shall take every precaution to avoid damage to the buildings, grounds and facilities of the OWNER or private property.

C. Fences, walls, hedges, shrubs, etc., shall be carefully removed, preserved, and replaced when the construction is completed. Grassed areas, other than lawns, shall be graded, fertilized, and seeded when construction is completed and in accordance with the requirements of the technical Specifications. Where ditches or excavations cross lawns, the sod shall be removed carefully and replaced when the backfilling has been completed. If sod is damaged or not handled properly, it shall be replaced with new sod equal to existing sod at the CONTRACTOR's expense. When construction is completed, the facilities and grounds of the OWNER's property shall be restored to as good or better condition than found as quickly as possible at the CONTRACTOR's expense.

D. When directed by the OWNER, large trees or other facilities that cannot be preserved and replaced shall be removed by the CONTRACTOR. The OWNER will assume the responsibility for settling with the property OWNER for the loss of said trees or facilities. The CONTRACTOR shall be solely and entirely responsible for any damage to all other trees or facilities.

E. Foundations, adjacent to where an excavation is to be made below the bottom of the foundation, shall be supported by shoring, bracing, or underpinning as long as the excavation shall remain open, or thereafter if required to insure the stability of the foundation and the CONTRACTOR shall be held strictly responsible for any damage to said foundations.

1.22 LANDS FOR WORK

A. The OWNER will provide the lands upon which the work under this Contract is to be done or the necessary easements over said lands to include sufficient space for the proper execution of the work, together with right of access to same. The OWNER will provide the CONTRACTOR with information, which delineates and describes the lands owned and rights-of-way acquired. The OWNER shall provide land required for storage of construction materials and for any temporary construction facilities for the storage of equipment. The CONTRACTOR will furnish his own power and water supply unless otherwise specifically set out herein or in the contract documents.

1.23 INTERFERENCE WITH AND PROTECTION OF STREETS

A. The CONTRACTOR shall not close or obstruct any portion of a street, road, or private way without obtaining permits therefore from the proper authorities. If any street, road, or private way shall be rendered unsafe by the CONTRACTOR's operations, he shall make such repairs or provide such temporary ways or guards as shall be acceptable to the proper authorities.

B. Streets, roads, private ways, and walks not closed shall be maintained passable and safe by the CONTRACTOR, who shall assume and have full responsibility for the adequacy and safety of provisions made therefore.

C. The CONTRACTOR shall, at least twenty-four (24) hours in advance, notify the Police and Fire Departments in writing, if the closure of a street or road is necessary. He shall cooperate with the Police Department in the establishment of alternate routes and shall provide adequate detour signs, plainly marked and well lighted, in order to minimize confusion.

D. All excavated materials and equipment to be incorporated in the Work shall be placed so as not to injure any part of the Work or existing facilities and so that free access can be had at all times to all parts of the Work and to all public utility installations in the vicinity of the Work. Materials and equipment shall be kept neatly piled and compactly stored in such locations as will cause a minimum of inconvenience to public travel and adjoining OWNERs, tenants, and occupants.

1.24 EXISTING UTILITIES

A. Special precautions shall be taken by the CONTRACTOR to avoid damage to existing overhead and underground utilities owned and operated by the OWNER or by public or private utility companies.

B. Before proceeding with the Work, the CONTRACTOR shall confer with all public or private companies, agencies or departments that own and operate utilities in the vicinity of the Construction Work. The purpose of the conference, or conferences, shall be to notify said companies, agencies, or departments of the proposed construction schedule, verify the location of, and possible interference with, the existing utilities that are shown on the Drawings, arrange for necessary suspension of service, and arrange to locate and avoid interference with all utilities (including house and any building connections) that are not shown on the Drawings.

C. The CONTRACTOR shall locate all unknown metallic hazards, namely buried pipe, metals, etc., by using a pipe locator. The pipe locator shall immediately precede the trench ditching and all hazards located shall be marked in such a manner as to notify the machine operator of such hazard.

D. Where existing utilities or appurtenant structures, either underground or above-ground, are encountered, they shall not be displaced or molested unless necessary, and in such case shall be replaced in as good or better condition than found as quickly as possible. Relocation and/or replacement of all utilities and appurtenant structures to accommodate the construction work shall be at cost to the OWNER, unless such relocation and/or replacement is by statute or agreement the responsibility of the CONTRACTOR.

1.25 FINAL CLEAN-UP

A. The Work will not be considered as completed until all final clean up has been done by the CONTRACTOR.

PART 2 – PRODUCTS (NOT USED)

PART 3 – EXECUTION (NOT USED)

END OF SECTION

SECTION 01 1100 – SUMMARY OF WORK

PART 1 – GENERAL

1.01 THE REQUIREMENT

A. The WORK to be performed under this Contract shall consist of furnishing parts, tools, equipment, materials, supplies and manufactured articles, and furnishing all labor, transportation, and services, including fuel, power, water, and essential communications, and performing all work or other operations required for the fulfillment of the Contract in strict accordance with the Contract Documents. The WORK shall require that all work, materials, and services not expressly indicated or called for in the Contract Documents, which may be necessary for the complete and proper construction of the WORK in good faith shall be provided.

B. The WORK will conform to the Maricopa Association of Governments (MAG) Uniform Standard Details and Specifications, as well as Yavapai County Standards. The most stringent will govern.

1.02 WORK COVERED BY CONTRACT DOCUMENTS

A. The WORK of this Contract comprises construction, installation, and/or modification of the Jerome Wastewater Treatment Plant and Sewer Main. The modifications and improvements shall include, but are not limited to the following:

1. The work shall include civil, architectural, mechanical, structural, and electrical and control work shown in the construction documents.
2. All work on this project will be coordinated with the Town's Engineering, Public Works, and the WWTP Operational staff;
3. Site grading and drainage improvements;
4. Installation of new 12-inch FPVC gravity sewer main,
5. Installation of 11 new 48-inch sewer manholes where indicated on the plans;
6. Construction of a new access roadway, including all grading and drainage work;
7. Installation of new package headworks screening equipment;
8. Installation of (2) Sequencing Batch Reactors (SBR):
    a. Construction of two new 54,000-gallon SBR basins, complete with all piping and piping appurtenances, valving, safety guard rail system, pumps and submersible mixers, and floating decanter valve;
    b. Construction of one new aerobic digester basin, complete will all equipment, pumps, piping and piping appurtenances, valving, and safety guardrail system;
    c. Construction of one new 9,075-gallon post-SBR equalization basin, complete will all equipment, flow meters, valving, piping and piping appurtenances;
    d. Installation of SBR aeration equipment, complete with all blowers, piping and piping appurtenances, valving, and instrumentation;
    e. Installation of new local SBR control panel;
9. Removal and demolition of existing wastewater equipment and components where indicated on the plans. Existing equipment shall be removed with the utmost care and returned to the Town;
10. Installation of new Sludge Dewatering Equipment, complete with piping and piping appurtenances, chemical/polymer supply equipment, air compressor, valving, controls, and instrumentation;
11. Construction of new 5,000-gallon Chlorine Contact Chamber, complete with piping and piping appurtenances, valving, gates, and instrumentation;
12. Installation of chlorination and dechlorination chemical dosing equipment, complete with piping and piping appurtenances, and instrumentation;

13. Construction of two new sludge drying beds, complete with piping and appurtenances, valving, and liner;
14. Construction of a new emergency overflow equalization basin, complete with piping and piping appurtenances, valving, and liner;
15. Installation of one new packaged overflow lift station;
16. Installation of one new drying bed and drain lift stations, complete with all mechanical, electrical, and controls and instrumentation equipment;
17. Upgrade the existing WWTP Electrical Service, and install a new power distribution panel, ATS, and Emergency Diesel Generator;
18. Construction of new WWTP Blower Building structural, mechanical, and electrical elements. Installation of new building, with architectural and mechanical/ventilation and building plumbing components;
19. Installation per Geotechnical Evaluation and Report in Appendix A of these Specifications;
20. Testing, commissioning, and startup of the new equipment and improved process areas within the plant.
21. Process Control programming and integration, shall be performed by a qualified Instrumentation and Control INTEGRATOR (I&C INTEGRATOR). The I&C INTEGRATOR shall furnish field instrumentation and controls as identified and listed in the applicable Sections of Division 40 – Process Integration. The I&C INTEGRATOR shall also be responsible for landing the wiring of these instruments at the PLC's and calibration and programming of the instrumentation. The CONTRACTOR shall be responsible for the installation of conduits, wires, and all required tags. The CONTRACTOR shall also be responsible for the installation of the instruments and landing all field wiring to the instruments.

B. The WORK includes obtaining any permits related or required by the Contract.

1.03 WORK BY OTHERS

A. Where two (2) or more Contracts are being performed at one time on the same Site or adjacent land in such manner that work under one (1) Contract may interfere with work under another, the sequence and order of the WORK in either or both Contracts to the agreement of both contracting entities shall be determined. When the Site of one (1) Contract is the necessary or convenient means of access for performance of work under another, the privilege of access or other reasonable privilege to the CONTRACTOR so desiring may be granted, to the extent, amount, and in manner and at a time that shall be determined. Conduct its operations to cause a minimum of interference with the work of such other contractors, and shall cooperate fully with such contractors to allow continued safe access to their respective portions of the Site, as required to perform work under their respective contracts.

B. Interference with Work on Utilities: Cooperate fully with all utility forces or forces of other public or private agencies engaged in the relocation, altering, or otherwise rearranging of any facilities, which interfere with the progress of the WORK, and shall schedule the WORK to minimize interference with said relocation, altering or other rearranging of facilities. Any delays, reduction in work efficiency or hardships incurred shall be identified and resolved to the satisfaction of both parties.

PART 2 – PRODUCTS (NOT USED)

PART 3 – EXECUTION (NOT USED)

END OF SECTION

SECTION 01 1400 – WORK RESTRICTIONS

PART 1 - GENERAL

1.01 LAND FOR WORK AND STORAGE

A. The OWNER will provide the lands upon which the work under this Contract is to be done or the necessary easements over said lands to include sufficient space for the proper execution of the work, together with right of access to same. The OWNER will provide the CONTRACTOR with information, which delineates and describes the lands owned and rights-of-way acquired. The OWNER shall provide land required for storage of construction materials and for any temporary construction facilities for the storage of equipment. The CONTRACTOR will furnish his own power and water supply unless otherwise specifically set out herein or in the contract documents.

B. CONTRACTOR shall designate and arrange for the use, a portion of the property adjacent to the WORK for its exclusive use during the term of the Contract as storage and shop area for its construction operations relative to this Contract.

C. Use of the Site shall be limited to its construction operations, including on-site storage of materials, on-site fabrication facilities and field offices.

D. All or part of the existing Site may be utilized during the entire period of construction for the conduct of normal operations. Cooperate and coordinate to facilitate operations and to minimize interference with the operations at the same time. In any event, access to the site during the period of construction shall be allowed.

E. All access to the site by the CONTRACTOR, Subcontractors, workmen, material/equipment suppliers, etc., shall be via approved access locations as designated by the OWNER. All vehicular or equipment activity shall be strictly confined to the construction limits as indicated by OWNER.

F. Remove all temporary construction and temporary facilities at close of the job or when no longer needed.

1.02 WORK ON "PRIVATE PROPERTY"

A. Private property is defined as property other than that belonging to the OWNER. Highway and railroad rights-of-way, public parks, school yards and other such properties shall be considered "private properties" for the purpose of this Paragraph.

B. In connection with water line, sewer line, gas line or similar work performed on "private property," the CONTRACTOR shall confine his equipment, the storage of materials and the operations of his workman to the limits indicated on the Drawings, or to lands and rights-of-way provided for the Project by the OWNER, and shall take every precaution to avoid damage to the buildings, grounds and facilities of the OWNER or private property.

C. Fences, walls, hedges, shrubs, etc., shall be carefully removed, preserved, and replaced when the construction is completed. Grassed areas, other than lawns, shall be graded, fertilized, and seeded when construction is completed and in accordance with the requirements of the Technical Specifications. Where ditches or excavations cross lawns, the sod shall be removed carefully and replaced when the backfilling has been completed. If sod is damaged or not handled properly, it shall be replaced with new sod equal to existing sod at the CONTRACTOR’s expense. When construction is completed, the facilities and grounds of the OWNER’s property shall be restored to as good or better condition than found as quickly as possible at the CONTRACTOR’s expense.

D. When directed by the OWNER, large trees or other facilities that cannot be preserved and replaced shall be removed by the CONTRACTOR. The OWNER will assume the responsibility for settling with the property OWNER for the loss of said trees or facilities. The CONTRACTOR shall be solely and entirely responsible for any damage to all other trees or facilities.

E. Foundations, adjacent to where an excavation is to be made below the bottom of the foundation, shall be supported by shoring, bracing or underpinning as long as the excavation shall remain open, or thereafter if required to insure the stability of the foundation and the CONTRACTOR shall be held strictly responsible for any damage to said foundations.

F. All excavated materials and equipment to be incorporated in the Work shall be placed so as not to injure any part of the Work or existing facilities and so that free access can be had at all times to all parts of the Work and to all public utility installations in the vicinity of the Work. Materials and equipment shall be kept neatly piled and compactly stored in such locations as will cause a minimum of inconvenience to public travel and adjoining OWNERs, tenants, and occupants.

1.03 EXISTING UTILITIES

A. Special precautions shall be taken by the CONTRACTOR to avoid damage to existing overhead and underground utilities owned and operated by the OWNER or by other public or private utility companies.

B. Before proceeding with the Work, the CONTRACTOR shall confer with all public or private companies, agencies or departments that own and operate utilities in the vicinity of the Construction Work. The purpose of the conference, or conferences, shall be to notify said companies, agencies, or departments of the proposed construction schedule, verify the location of, and possible interference with, the existing utilities that are shown on the Drawings, arrange for necessary suspension of service, and arrange to locate and avoid interference with all utilities (including house and any building connections) that are not shown on the Drawings.

C. The CONTRACTOR shall locate all unknown metallic hazards, namely buried pipe, metals, etc., by using a pipe locator. The pipe locator shall immediately precede the trench ditching and all hazards located shall be marked in such a manner as to notify the machine operator of such hazard.

D. Where existing utilities or appurtenant structures, either underground or above-ground, are encountered, they shall not be displaced or molested unless necessary, and in such case shall be replaced in as good or better condition than found as quickly as possible. Relocation and/or replacement of all utilities and appurtenant structures to accommodate the construction work shall be at cost to the OWNER, unless such relocation and/or replacement is by statute or agreement the responsibility of the CONTRACTOR.

1.04 TRAFFIC CONTROL

A. Traffic Control Plan: CONTRACTOR shall develop and a submit a Traffic Control Plan for the protection of traffic in public or private streets and ways, provide, place, and maintain all necessary barricades, traffic cones, warning signs, lights and other safety devices.

1. Traffic Control Plan shall conform to Yavapai County and ADOT requirements. Traffic control plans shall be approved by the OWNER and the governing agencies prior to construction commencement.

2. Take all necessary precautions for the protection of the WORK and the safety of the public. Barricades and obstructions shall be illuminated at night and all lights shall be kept burning from sunset until sunrise. Station guards or flaggers may be required by the public authorities within their respective jurisdictions in order to conform to such special safety regulations relating to traffic control Signs, signals and barricades shall conform to the requirements Subpart G, Part 1926, of the OSHA Safety and Health Standards for Construction.

B. HIGHWAY LIMITATIONS

Make investigation of the condition of available public and private roads and of clearances, restrictions, bridge load limits, and other limitations affecting transportation and ingress and egress to the site of the WORK.

C. TEMPORARY CROSSINGS

General: Continuous, unobstructed, safe, and adequate pedestrian and vehicular access shall be provided. Vehicular access to residential driveways shall be maintained to the property line.

D. STREET USE

Nothing herein shall be construed to entitle any entity to the exclusive use of any public street, alleyway, or parking area during the performance of the WORK hereunder, and it shall so conduct its operations as not to interfere unnecessarily with the authorized work of utility companies or other agencies in such streets, alleyways, or parking areas. No streets shall be closed to the public without first obtaining permission from the proper governmental authority. Where excavation is being performed in primary streets or highways, one lane in each direction shall be kept open to traffic at all times unless otherwise indicated. Toe boards shall be provided to retain excavated material if required by the ENGINEER or the agency having jurisdiction over the street or highway. Fire hydrants on or adjacent to the WORK shall be kept accessible to fire-fighting equipment at all times. Temporary provisions shall be made to assure the use of sidewalks and the proper functioning of all gutters, storm drain inlets and other drainage facilities. Any open trenches shall be covered with H20 traffic-rated steel trench plates during non-supervised hours.

PART 2 - PRODUCTS (NOT USED)

PART 3 - EXECUTION (NOT USED)

END OF SECTION

SECTION 01 2000 – PRICE AND PAYMENT PROCEDURES

PART 1 - GENERAL

1.01 SECTION INCLUDES

A. Requirements for preparation, format, and submittal of Schedule of Values.

B. Procedures for preparation and submittal of applications for progress payments.

C. Documentation of changes in Contract Price and Contract Time.

D. Change procedures.

E. Correlation of CONTRACTOR submittals based on changes.

F. Procedures for preparation and submittal of application for final payment.

1.02 SCHEDULE OF VALUES

A. Prepare Schedule of Values identifying costs of Major Items of Work and other costs shown in sample included at end of this Section.

B. Divide the Work into following Major Items of Work and subdivide the Major Items that will complement not only the scope of the work, but the progress of work as well.

C. Assign prices and unit price to Items of Work which aggregate the Contract Price. Separate all major items with unit prices.

D. Submit preliminary schedule of values for ENGINEER's approval.

E. Submit corrected schedule of values within 10 days upon receipt of reviewed Schedule of Values, but no later than 10 days prior to anticipated submittal of first Application for Payment.

1.03 APPLICATIONS FOR PROGRESS PAYMENTS

A. Payment Period: Submit at intervals stipulated in the Agreement.

B. Electronic media printout including equivalent information will be considered in lieu of standard form specified; submit sample to ENGINEER for approval.

C. Forms filled out by hand will not be accepted.

D. For each item, provide a column for listing each of the following:
   1. Item Number
   2. Description of work
   3. Scheduled Values
   4. Previous Applications
   5. Work in Place and Stored Materials under this Application
   6. Authorized Change Orders
   7. Total Completed and Stored to Date of Application
   8. Percentage of Completion
   9. Balance to Finish
   10. Retainage

E. Execute certification by signature of authorized officer.

F. Use data from approved Schedule of Values. Provide dollar value in each column for each line item for portion of work performed and for stored products.

G. List each authorized Change Order as a separate line item, listing Change Order number and dollar amount as for an original item of Work.

H. Submit three copies of each Application for Payment.

I. Include the following with the application:
   1. Transmittal letter as specified for Submittals in Section 01 3300 – Submittal Procedures.
   2. Construction progress schedule, revised and current as specified in these Specifications.
   3. Current construction photographs as specified in these Specifications.
   4. Partial release of liens from major Subcontractors and vendors.
   5. Sustainable design documentation applicable to work for which application is being made.
   6. Project record documents as specified in these Specifications, for review by OWNER which will be returned to the CONTRACTOR.
   7. Affidavits attesting to off-site stored products.

J. When ENGINEER requires substantiating information, submit data justifying dollar amounts in question. Provide one copy of data with cover letter for each copy of submittal. Show application number and date, and line item by number and description.

1.04 MODIFICATION PROCEDURES

A. Submit name of the individual authorized to receive change documents and who will be responsible for informing others in CONTRACTOR's employ or subcontractors of changes to the Contract Documents.

B. For minor changes not involving an adjustment to the Contract Price or Contract Time, ENGINEER will issue instructions directly to CONTRACTOR.

C. For other required changes, ENGINEER will issue a document signed by OWNER instructing CONTRACTOR to proceed with the change, for subsequent inclusion in a Change Order.
   1. The document will describe the required changes and will designate method of determining any change in Contract Price or Contract Time.
   2. Promptly execute the change.

D. For changes for which advance pricing is desired, ENGINEER will issue a document that includes a detailed description of a proposed change with supplementary or revised drawings and specifications, a change in Contract Time for executing the change with a stipulation of any overtime work required and the period of time during which the requested price will be considered valid. CONTRACTOR shall prepare and submit a fixed price quotation within 14 days of request.

E. CONTRACTOR may propose a change by submitting a request for change to ENGINEER, describing the proposed change and its full effect on the Work, with a statement describing the reason for the change, and the effect on the Contract Price and Contract Time with full documentation and a statement describing the effect on Work by separate or other contractors. Document any requested substitutions.

F. Computation of Change in Contract Amount: As specified in the Agreement and Conditions of the Contract.
   1. For change requested by ENGINEER for work falling under a fixed price contract, the amount will be based on CONTRACTOR's price quotation.
   2. For change requested by CONTRACTOR, the amount will be based on the CONTRACTOR's request for a Change Order as approved by ENGINEER.
   3. For pre-determined unit prices and quantities, the amount will be based on the fixed unit prices.

4. For change ordered by ENGINEER without a quotation from CONTRACTOR, the amount will be determined by ENGINEER based on the CONTRACTOR's substantiation of costs as specified for Time and Material work.

G. Substantiation of Costs: Provide full information required for evaluation.
   1. On request, provide following data:
      a. Quantities of products, labor, and equipment
      b. Taxes, insurance, and bonds
      c. Overhead and profit
      d. Justification for any change in Contract Time
      e. Credit for deletions from Contract, similarly documented
   2. Support each claim for additional costs with additional information:
      a. Origin and date of claim
      b. Dates and times that work was performed, and by whom
      c. Time records and wage rates paid
      d. Invoices and receipts for products, equipment, and subcontracts, similarly documented
   3. For Time and Material work, submit itemized account and supporting data after completion of change, within time limits indicated in the Conditions of the Contract.

H. Execution of Change Orders: ENGINEER will issue Change Orders for signatures of parties as provided in the Conditions of the Contract.

I. After execution of Change Order, promptly revise Schedule of Values and Application for Payment forms to record each authorized Change Order as a separate line item and adjust the Contract Price.

J. Promptly revise progress schedules to reflect any change in Contract Time, revise sub-schedules to adjust times for other items of work affected by the change, and resubmit.

K. Promptly enter changes in Project Record Documents.

1.05 APPLICATION FOR FINAL PAYMENT

A. Prepare Application for Final Payment as specified for progress payments, identifying total adjusted Contract Price, previous payments, and sum remaining due.

B. Application for Final Payment will not be considered until the following have been accomplished:
   1. All closeout procedures specified in in applicable Sections of Division 01 – General Requirements.

SCHEDULE OF VALUES (Sample Only – Modify per project needs)							
No.	**Item**	**Payment**	**Measurement**	Est. Qty	Unit	Unit $	Value
1	Mobilization/ Demobilization/Bond/ Insurance	Payment shall be made for mobilization and demobilization to and from the site, for bonds and insurance. CONTRACTOR shall provide all the necessary mobilization requirements for the proper construction activities, include providing all the necessary accommodations for personnel and equipment as describe in these Specification. Bonds and insurance requirements shall meet the requirements of the Contract Documents.	Based on Representative Opinion that the item is complete.	#	LS	$_____	$_____
2	Earthwork for Grading, cut, fill, and export	Payment shall be made for the work associated with earthworks grading, cut, fill, and export of any excess material. Fill shall include screening, placement, and compaction of native material to meet the requirements of the Contract Documents. Excess material shall be screened and exported to a dedicated site per the contract. Excess material shall be spread evenly within the dedicated site by the CONTRACTOR. Screened material greater than 4” shall be disposed by the CONTRACTOR offsite.	Measurement shall be based on a cubic yard basis of material placed or excavated as shown on the drawings, specified in the contract documents. Original delivery tickets shall be delivered to the Representative at the end of each day. The Representative will create a chronological spreadsheet of the quantities and reconcile them with the CONTRACTOR after each weekly progress meeting. Requests for payment shall only include quantities that have been reconciled.	#	CY	$_____	$_____

3	Yard Piping	Payment shall be made for site work associated with the installation of the yard piping as described in the Contract Documents. The work shall include all pipes, fitting, and associated labor and materials required for the proper trenching, installation, and backfill of the pipes. This shall also include any potholing, pavement restoration, wire tracing and surveying of the required work.	Measurement shall be made based on linear feet of pipe installed and the breakdown shown on the CONTRACTOR's schedule of values as the items are completed and accepted by the Representative.	#	LF	$_____	$_____
4	Asphalt Pavement	Payment shall be made for asphalt road pavement as described in the Contract Documents. This includes the preparation and place of the hot-mix asphalt, binder, and base course where required.	Measurement shall be based on a cubic yard basis of material placed or excavated as shown on the drawings, specified in the contract documents. Original delivery tickets shall be delivered to the Representative at the end of each day. The Representative will create a chronological spreadsheet of the quantities and reconcile them with the CONTRACTOR after each weekly progress meeting. Requests for payment shall only include quantities that have been reconciled.	#	CY	$_____	$_____
5	Package WRF	Payment shall be made for the work associated with the installation of the package WRF, and associated tank appurtenances as shown on the drawings, specified in the contract documents. This bid item is only to include items, components and equipment as supplied by the Package WRF manufacturer. All items associated with the Package WRF but not supplied by WRF	Measurement shall be made based on the breakdown shown on the CONTRACTOR's schedule of values as the items are completed and accepted by the Representative.	#	EA	$_____	$_____

		manufacturer shall be included in the Base Lump Sum Bid.					
6	Electrical and Controls	Payment shall be made for the work associated with the furnish, installation and wiring of the electrical and controls component of the project as shown on the drawings, specified in the contract documents. This includes all electrical and controls equipment and components, as well as all field instrumentation with the exception of the electrical and instrumentation to be provided by the tank manufacturer. Programming of the PLC and system controls integration shall be a separate bid item if required by the contract documents.	Measurement shall be made based on the breakdown shown on the CONTRACTOR's schedule of values as the items are completed and accepted by the Representative.	#	LS	$_____	$_____
7	Base Lump Sum	Payment shall be made for the work associated with the portion of the project not specifically included in the above bid schedule but required to be completed as part of the project as shown on the drawings, specified in the contract documents, and as required by the District. This includes all general conditions, civil, mechanical, structural, architectural, and electrical & controls work.	Measurement shall be made based on the breakdown shown on the CONTRACTOR's schedule of values as the items are completed and accepted by the Representative.	#	LS	$_____	$_____

8	**Total Lump Sum**						**$_____**
9	Alternate Bid Item 1 - Name	Payment for alternate bid items shall be based on payments for similar items listed above.	Measurement for alternate bid items shall be based on measurements for similar items listed above.				

PART 2 PRODUCTS - NOT USED

PART 3 EXECUTION - NOT USED

END OF SECTION

SECTION 01 3216 – CONSTRUCTION PROGRESS SCHEDULES

PART 1 - GENERAL

1.01 SUMMARY

A. **Section Includes**: Preparation, submittal and maintenance of computerized progress schedule and reports, contract time adjustments and payment requests, including the following:

1. Preliminary Schedule
2. Baseline Schedule
3. Schedule Updates
4. Schedule Revisions

1.02 PRECONSTRUCTION SCHEDULING MEETING

A. General: Before issuance of Notice to Proceed, a pre-construction meeting shall be held at the location, date and time designated by ENGINEER and OWNER. This meeting shall be conducted by the ENGINEER and OWNER. Attendees shall include the ENGINEER, OWNER's representatives, General CONTRACTOR's project manager and field superintendent, and representatives from each subcontractor for the project as appropriate.

B. At the meeting, scheduling requirements shall be reviewed with CONTRACTOR. These include schedule preparation, reporting requirements, updates, revisions, and schedule delay analysis. CONTRACTOR shall present their schedule methodology, planned sequence of operations, and present their proposed activity coding structure.

1.03 CONSTRUCTION PROGRESS MEETINGS AND SCHEDULES

A. Weekly Progress meetings shall be held by the CONTRACTOR. All matters bearing on progress and performance of the work since preceding progress meeting shall be discussed and resolved including, without limitation, any previously unresolved matters, deficiencies in the work or methods being employed for the work, and problems, difficulties, or delays which may be encountered. CONTRACTOR shall keep records of the meetings and distribute to all party.

B. CONTRACTOR shall submit a Baseline Construction Schedule for ENGINEER and OWNER approval 14 days after Notice to Proceed. CONTRACTOR shall maintain a progress schedule based on the approved Baseline Construction Schedule that is updated weekly and shows progress and execution of work.

PART 2 - PRODUCTS (NOT USED)

PART 3 - EXECUTION (NOT USED)

END OF SECTION

SECTION 01 3300 – SUBMITTAL PROCEDURES

PART 1 - GENERAL

1.01 WORK INCLUDED

A. Shop Drawing, Descriptive Literature, Project Data and Samples (specifically, when Samples are requested) for all manufactured or fabricated items shall be Submitted by the CONTRACTOR. CONTRACTOR shall examine and review the Submittal to ensure that the information is in the form and in the manner required by the ENGINEER. The review of the Submittal by the ENGINEER shall not be construed as a complete check or approval, but will only indicate that the general method of construction and detailing is satisfactory. Review of such Submittal will not relieve the CONTRACTOR of the responsibility for any errors, which may exist. The CONTRACTOR shall be responsible for the dimensions and design of adequate connections, details and satisfactory of all WORK.

1.02 DEFINITIONS

A. The term "Submittals" shall mean shop drawings, manufacturer's drawings, catalog sheets, brochures, descriptive literature, diagrams, schedules, calculations, material lists, performance charts, test reports, office and field samples and items of similar nature, which are normally Submitted for the ENGINEER’s review for conformance with the Design Concept and compliance with the Contract Documents.

1.03 GENERAL CONDITIONS

A. Review by the ENGINEER of shop drawings or submittals of material and equipment shall not relieve the CONTRACTOR from the responsibilities of furnishing proper dimension, size, quantity, materials, and all performance characteristics to, efficiently perform the Requirements and intent of the Contract Documents. Review shall not relieve the CONTRACTOR responsibility for errors of any kind on the shop drawings. Review is intended only to assure conformance with the design concept of the Project and compliance with the information given in the Contract Documents. Review of shop drawings shall not be construed as releasing the CONTRACTOR from the responsibility of complying with the Contract Documents.

B. Do not consider Submittals as Contract Documents. Purpose of Submittals is to demonstrate how CONTRACTOR, to conform to the design concepts.

1.04 GENERAL REQUIREMENTS FOR SUBMITTALS

A. Shop drawings shall be prepared by a qualified detailer. Details shall be identified by reference to sheet and detail numbers shown on Contract Documents. Where applicable, show fabrication, layout, setting and erection details. Shop drawings are defined as original drawings prepared by the CONTRACTOR, subcontractor, vendor, suppliers, or distributors performing WORK under this Contract. Shop drawings illustrate some portion of the WORK and show fabrication, layout, setting or erection details of equipment, materials, and components. Shop drawings shall be folded to an approximate size of 8½-inch x 11-inch and in such manner that the title block will be located in the lower right-hand corner of the exposed surface.

B. Project data shall include manufacturer's standard schematic drawings modified to delete information, which is not applicable to the Project and shall be supplemented to provide additional information applicable to the Project. Each copy of descriptive literature shall be clearly marked to identify pertinent information as it applies to the Project.

C. Where samples are required, they shall be adequate to illustrate materials, equipment, or workmanship and to establish Standards by which completed WORK is judged. Provide sufficient size and quantity to clearly illustrate functional characteristics of product and material, with integrally related parts and attachment devices, along with a full range of color samples.

D. The CONTRACTOR shall review and check Submittals, indicating his review by initials and date.

E. If the Submittals deviate from the Contract Drawings and/or Specifications, the CONTRACTOR shall clearly identify the deviation and state any reasons for the deviation. The ENGINEER may approve a change. Any costs resulting from a change will be the responsibility of the CONTRACTOR.

F. Additional information on particular items, such as special drawings, schedules, calculations, performance curves and material details, shall be provided when specifically requested by the Technical Specifications.

G. Submittals for all electrically operated items (including instrumentation and controls) shall include complete wiring diagrams showing lead, runs, number of wires, wire size, color coding, all terminations and connections and coordination with related equipment.

H. Equipment shop drawings shall indicate all factory or shop paint coatings applied by suppliers, manufacturers, and fabricators; the CONTRACTOR shall be responsible for insuring the compatibility of such coatings with the field applied paint products and systems.

I. Fastener Specifications of manufacturer shall be indicated on equipment shop drawings.

J. No material shall be fabricated or shipped unless the applicable drawings or Submittals have been reviewed and approved by the CONTRACTOR and ENGINEER.

K. All bulletins, brochures, instructions, parts lists, and warranties packaged with and accompanying materials and products delivered to and installed in the Project shall be saved and transmitted to the ENGINEER for safe keeping and preparations of the Operation &Maintenance Manuals.

L. Quantity of the Vendor's Submittals shall be as required by the CONTRACTOR. At a minimum, a Vendor shall provide one (1) electronic PDF copy to the CONTRACTOR.

1.05 SUBCONTRACTOR or VENDOR RESPONSIBILITIES

A. Verify field measurements, field construction criteria, catalog numbers and similar data.

B. Coordinate each Submittal with requirements of Work and Contract Documents.

C. Quantity of the Subcontractor or Vendor's Submittals shall be as required by the CONTRACTOR. At a minimum, one (1) electronic PDF copy shall be provided to the CONTRACTOR.

1.06 CONTRACTOR RESPONSIBILITIES

A. Submit complete listing of all required shop drawing submittals by Specification Section to the ENGINEER.

B. Submit shop drawings, product data, samples, and other pertinent information in sufficient detail to show compliance with specified requirements.

C. Check, verify, and revise Submittals as necessary to bring them into conformance with Contract Documents and actual field conditions.

1. Determine and verify quantities, dimensions, specified design and performance criteria, materials, catalog numbers and similar data.

2. Determine and verify that the equipment or product meets all aspect of the contract documents.
3. Coordinate Submittal with other Submittals and with the requirements of the Contract Documents.

D. After completion of checking, verification and revising, stamp, sign and date Submittals indicating review and approval and submit to ENGINEER.
1. Attach a copy of the corresponding specifications for the equipment or product and identify all deviations from the specifications, along with proposed corrective actions, clarifications, exemptions, etc. Submittals without accompanying specifications shall be rejected.
2. Stamp and signature indicate CONTRACTOR has satisfied shop drawing review responsibilities and constitutes written review of shop drawing with general conformance with the Contract Documents.
3. Shop drawings without CONTRACTOR written reviewed stamp and signature will be returned for resubmission.

E. **Shop Drawings:** Submit one electronic copy in PDF format. A PDF copy of the submittal will be returned with reviewer's comments.

F. **Product Data and Manufacturer's Instructions:** Submit on electronic copy in PDF format. Excise or cross out non-applicable information and clearly mark applicable information with citations to and terminology consistent with Contract Documents.
1. A PDF copy will be returned with reviewer's comments.

G. **Samples:** Submit two (2) samples labeled with reference to applicable Contract Documents. Label will be returned with reviewer's selection when appropriate, comments and stamp. Samples will not be returned unless return is requested in writing and additional samples are submitted.

H. **Special Samples:** Submit one (1) sample labeled with reference to applicable Contract Documents. Sample and one (1) label will be returned for installation in the WORK.

I. Assume risk expense and delays when proceeding with work related to required Submittals without review and acceptance.

J. **Deferred Submittals:** Submit any and all requested deferred submittals as required by the Building Permit or local governing agency. The deferred submittals may include but not be limited to trusses, bar joists, or above ground tanks.

1.07 ENGINEER'S RESPONSIBILITY

A. ENGINEER's review of shop drawings, samples or test procedures will be only for conformance with design concepts and for compliance with information given in Contract Documents.
1. ENGINEER's review does not extend to:
a. Accuracy of dimensions, quantities or performance of equipment and systems designed by CONTRACTOR, subcontractor, or Vendor.
b. CONTRACTOR or subcontractor means, methods, techniques, sequences, or procedures, except when specified, indicated on the Drawings, or required by Contract Documents.
c. Safety precautions or programs related to safety, which shall remain the sole responsibility of the CONTRACTOR and the subcontractor.

B. Except as may be provided in subsequent Specifications, a submittal will be returned within 30 days. When a Submittal cannot be returned within that period, ENGINEER will, within a reasonable time after receipt of the Submittals, give notice of the date by which that submittal will be returned.

C. For Submittals returned No Exceptions Taken – Submittal is considered in conformance with the design concept.

D. For Submittals returned Accepted with Correction Noted – Make Correction Noted/See all Comments, CONTRACTOR shall incorporate all review comments into the work, but resubmittal of an amended Submittal is not required.

E. For Submittals returned Submit Specific Item – CONTRACTOR shall develop a new Submittal package with materials, equipment, methods, etc. that meet the requirements of the Contract Documents for that specific item.

F. For Submittals returned Revised and Resubmit – Make Corrections Note/See All Comments, CONTRACTOR shall incorporate the review comments into a complete revised package and resubmit it for review.

G. For Submittals returned Rejected – See All Comments, CONTRACTOR shall develop a new Submittal package with materials, equipment, methods, etc. that meet the requirements of the Contract Documents.

H. For Submittals returned Submittal Not Reviewed, Filed for Record, no further action is required by the CONTRACTOR for this Submittal.

I. ENGINEER will be entitled to rely upon the accuracy or completeness of designs, calculations or certification made by licensed professionals accompanying a particular Submittal whether or not a stamp or seal is required by Contract Documents or Laws and Regulations.

J. Costs incurred by the ENGINEER, as a result, of additional reviews of a particular Submittal after the second time it has been reviewed shall be borne by CONTRACTOR. Reimbursement to ENGINEER will be made by issuance of a Change Order.

1.08 MINOR OR INCIDENTAL PRODUCTS AND EQUIPMENT SCHEDULES

A. Shop Drawings of minor or incidental fabricated products will not be required, unless requested.

B. Submit tabulated lists of minor or incidental products showing the names of the manufactures and catalog numbers, with Product Data and Samples, as required to, determine acceptability.

1.09 SUBMITTALS FOR INFORMATION OR RECORD ONLY

A. Submit three (3) copies of each. None will be returned.

B. **Mill Test Reports**:
   1. Submit three (3) certified copies of factory and mill test reports for record only. No copies will be returned.
   2. Do not incorporate Products in the work, which have not passed testing and inspection satisfactorily.
   3. Pay for mill and factory tests.

C. **Reinforcing Steel**:
   1. Submit reinforcing steel fabrication and setting drawings for information or record only. No copies will be returned.
   2. Note deviations and variations as specified for shop drawings.

PART 2 – PRODUCTS (Not Used)

PART 3 – EXECUTION (Not Used)

END OF SECTION

SECTION 01 3529 – HEALTH, SAFETY, AND EMERGENCY RESPONSE PROCEDURES

PART 1 - GENERAL

1.01 SUMMARY

A. Section Includes: Development and maintenance of a Construction Safety Plan.

1.02 REFERENCES

A. OSHA.

1.03 CONSTRUCTION SAFETY PLAN

A. Detail the Methods and Procedures to comply with Federal, State, and Local Health and Safety Laws, Rules and Requirements for the duration of the Contract Times. Include the following:
   1. Identification of the Certified or Licensed Safety Consultant who will prepare, initiate, maintain and supervise safety programs, and procedures.
   2. Procedures for providing workers with an awareness of safety and health hazards expected to be encountered in the course of construction.
   3. Safety equipment appropriate to the safety and health hazards expected to be encountered during construction. Include warning devices, barricades, safety equipment in public right-of-way and protected areas, and safety equipment used in multi-level structures.
   4. Methods for minimizing employees' exposure to safety and health hazards expected during construction.
   5. Procedures for reporting safety or health hazards.
   6. Procedures to follow to correct a recognized safety and health hazard.
   7. Procedures for investigation of accidents, injuries, illnesses, and unusual events that have occurred at the construction site.
   8. Periodic and scheduled inspections of general work areas and specific work stations.
   9. Training for employees and workers at the jobsite.
   10. Methods of communication of safe working conditions, work practices and required personal protection equipment.

B. Assume responsibility for every aspect of Health and Safety on the jobsite, including the health and safety of Subcontractors, suppliers, and other persons on the jobsite.
   1. Forward available information and reports to the Safety Consultant who shall make the necessary recommendations concerning worker health and safety at the jobsite.
   2. Employ additional health and safety measures specified by the Safety Consultant, as necessary, for workers in accordance with OSHA guidelines.

C. Transmit to OWNER and ENGINEER copies of reports and other documents related to accidents or injuries encountered during construction.

PART 2 - PRODUCTS (NOT USED)

PART 3 - EXECUTION (NOT USED)

END OF SECTION

SECTION 01 4219 – REFERENCE STANDARDS

PART 1 - GENERAL

1.01 GENERAL

A. Titles of Sections and Paragraphs: Titles and Subtitles accompanying Specification Sections and paragraphs are for convenience and Reference only and do not form a part of the Specifications.

B. Applicable Publications: Whenever in these Specifications References are made to Published Specifications, Codes, Standards or other Requirements, it shall be understood that wherever no date is specified, only the latest Specifications, Standards or Requirements of the respective issuing agencies, which have been published as of the date that the Contract shall apply; except to the extent that said Standards or Requirements may be in conflict with applicable Laws, Ordinances or Governing Codes. No Requirements set forth in the Specifications or shown on the Drawings will be waived because of any provision of, or omission from, said Standards or Requirements.

C. Specialists, Assignments: In certain instances, Specification text requires (or implies) that specific WORK is to be assigned to specialists or expert entities, who must be engaged for the performance of that WORK. Such assignments shall be recognized as Special Requirements. These Requirements shall not be interpreted so as to conflict with the enforcement of Building Codes and similar Regulations Governing the WORK; also, they are not intended to interfere with Local Union Jurisdiction Settlements and similar conventions. Such assignments are intended to establish which party or entity involved in a specific unit of work is recognized as "Expert" for the indicated construction processes or operations. Nevertheless, the final responsibility for fulfillment of the entire set of Contract Requirements remains.

1.02 REFERENCE SPECIFICATIONS, CODES AND STANDARDS

A. Construct the WORK in accordance with the Contract Documents and the referenced portions of those Referenced Codes, Standards and Specifications.

B. Verify the following references agree with the plans and local requirements. All references listed are to the most recently approved and published edition.

References herein to "Building Code" shall mean International Building Code (IBC). Similarly, references to "Mechanical Code" or "International Mechanical Code," "Plumbing Code" or "Uniform Plumbing Code," "Fire Code" or "International Fire Code," shall mean International Mechanical Code (IMC), Uniform Plumbing Code (UPC) and International Fire Code (IFC). "Electric Code" or "National Electric Code (NEC)" shall mean the National Electric Code of the National Fire Protection Association (NFPA). The latest edition of the codes as approved by the Municipal Code and used by the local agency as of the date that the WORK is advertised for bids, as adopted by the agency having jurisdiction, shall apply to the WORK herein, including all Addenda, Modifications, Amendments, or other Lawful changes thereto.

C. In case of conflict between Codes, Reference Standards, Drawings, and the other Contract Documents, the most stringent Requirements shall govern. All conflicts shall be brought to the attention of the ENGINEER for clarification and directions prior to ordering or providing any materials or furnishing labor through the RFI process. The most stringent Requirements may be bid on.

D. All equipment and materials used on this project shall comply with the standards set forth in the American Iron and Steel Institute (AISI).

E. References herein to "OSHA Regulations for Construction" shall mean Title 29, Part 1926, Construction Safety and Health Regulations, Code of Federal Regulations (OSHA), including all changes and amendments thereto.

F. References herein to "OSHA Standards" shall mean Title 29, Part 1910, Occupational Safety and Health Standards (OSHA), Code of Federal Regulations, including all changes and Amendments thereto.

G. Applicable Standard Specifications: References in the Contract Documents to "Standard Specifications" or SSPWC shall mean the Standard Specifications for Public Works Construction.

1.03 REGULATIONS RELATED TO HAZARDOUS MATERIALS

A. Responsibility for all work included in the Contract Documents, regardless if shown or not, shall comply with all EPA, OSHA, RCRA, NFPA, and any other Federal, State, and Local Regulations governing the storage and conveyance of hazardous materials, including petroleum products.

PART 2 - PRODUCTS (NOT USED)

PART 3 - EXECUTION (NOT USED)

END OF SECTION

SECTION 01 4333 – MANUFACTURER'S FIELD SERVICES

PART 1 - GENERAL

1.01 THE REQUIREMENT

A. General: Provide a qualified service representative from each equipment company manufacturing or supplying equipment to perform the duties herein described and as required by the various Sections of the Specifications. All costs to perform these services shall be included in the supplier's proposal in accordance with the scope of work.

B. Supervision of Installation: The supplier shall provide direct and/or indirect supervision of the workers and ENGINEER, in accordance with the scope of work, to ensure that proper procedures are followed during equipment installation.

1.01 EQUIPMENT CHECK OUT:

A. After installation of the equipment has been completed and the equipment is presumably ready for operation but before it is operated by others, the representative shall inspect, operate, test, and adjust the equipment. The inspection shall include but shall not be limited to, the following points as applicable:

1. Soundness (without cracked or otherwise damaged parts)
2. Completeness in all details as specified
3. Correctness of setting, alignment, and relative arrangement of various parts
4. Adequacy and correctness of packing, sealing and lubricants
5. Completeness in electrical and controls
6. The operation, testing and adjustment shall be as required to prove that the equipment has been installed properly and is capable of satisfactory operation under the conditions specified. On completion of his WORK, the CONTRACTOR, manufacturer, or supplier's representatives shall submit a complete signed report of the result of his inspection, operation, adjustments, and tests. The report shall include descriptions of the points inspected, tests and adjustments made, quantitative results obtained if such are specified and suggestions for precautions to be taken to ensure proper maintenance. The report also shall include a certificate that the equipment conforms to the requirements of the Contract Documents and is ready for permanent operation and that nothing in the installation will render the manufacturer's warranty null and void.

B. Field Tests: As required by the individual Specification Sections, the manufacturer's representative shall be present when the field tests are made.

C. Operator Training: As required by the individual Specification Sections, the manufacturer's representative shall provide hands-on training to maintenance personnel in the proper operation and maintenance of the equipment prior to placing the equipment in full operation.

D. Post-startup Services: As required by the individual Specification Sections, the manufacturer's representative shall provide services beyond the startup of the equipment. Services may include assistance in the calibration, tuning and troubleshooting, plus any additional training, which may be required during the agreed time after the equipment, is accepted.

E. The CONTRACTOR shall be the supplier for items not specifically included in the supplier's scope of work.

PART 2 - PRODUCTS (NOT USED)

PART 3 - EXECUTION

3.01 EXECUTION

A. The CONTRACTOR shall submit one (1) electronic copy and two (2) hard copies of all equipment field service certification documents and certificates of warranty to the ENGINEER in accordance with applicable Sections of these Specifications and Contract Documents.

END OF SECTION

SECTION 01 4500 – QUALITY CONTROL

PART 1 - GENERAL

1.01 THE REQUIREMENT

A. The Specific Quality Control Requirements for the WORK are indicated throughout the Contract Documents. The Requirements of this Section are primarily related to performance of the WORK beyond furnishing of manufactured products. The term "Quality Control" includes pre-activity inspection, follow up meetings, sampling and testing, and associated requirements.

B. All materials to be incorporated into the work shall be subject to sampling, testing, and approval as required by specifications.

1.02 INSPECTION AT PLACE OF MANUFACTURE

A. Unless otherwise indicated, all products, materials, and equipment shall be subject to inspection by the ENGINEER at the place of manufacture.

B. Unless noted otherwise, the presence of the ENGINEER at the place of manufacturer is not required; however, this shall not relieve responsibility for providing products, materials and equipment that comply with all requirements of the Contract Documents.

1.03 SAMPLING AND TESTING

A. Unless otherwise specified, samples and tests shall be made in accordance with either: the Standard Methods of AASHTO, ASTM, and/or ASME, which were in effect and published at the time of advertising for bids. The laboratory responsible for the test(s) shall furnish at least one copy of the test results to the CONTRACTOR, the ENGINEER, and to the appropriate material supplier.

1.04 INSPECTION AND TESTING SERVICE

A. Independent inspection and testing laboratory service shall comply with the following:
   1. Unless noted otherwise by the Specifications, an independent firm shall be appointed and employed by the CONTRACTOR to perform inspection and testing, including soils and concrete testing.
   2. Perform inspections, testing, and other services as required.
   3. Submit Reports of Testing to the ENGINEER, CONTRACTOR and OWNER if required in duplicate, indicating observations and results of tests, and indicating compliance or non-compliance with Contract Documents.
   4. CONTRACTOR to notify 48 hours prior to the expected time for operations requiring inspection and laboratory testing services is required.
   5. The same independent firm on instructions shall perform retesting required because of non-conformance to requirements.
   6. For tests and samples required, arrangements shall be made with an independent firm for payment and scheduling of testing. Responsibility shall be taken for the cost of sampling and testing.
   7. Provide an overall report on inspection and test results for project closeout.
   8. All materials and/or equipment not conforming to the requirements of the Specifications, whether in place or not, will be rejected. Rejected materials and/or equipment shall be removed immediately from the site of work unless otherwise permitted by the ENGINEER. No rejected material and/or equipment, the defects of which have been subsequently corrected, shall be used until approved in writing by the ENGINEER. CONTRACTOR shall be responsible for re-testing of all rejected materials.

1.05 SPECIAL INSPECTION

A. Various categories for special inspection/ observation of work progress during the course of construction are listed, but not limited to specifications and notes in the drawings. The OWNER requires on-site observation of the work at these various stages prior to covering the work. A list of such special inspections will be reviewed at the Pre-Construction Conference and subsequent job meetings, and it is understood that the CONTRACTOR will not cover work until such observation has been completed. The OWNER and OWNER representatives will be responsible for reasonable cooperation with CONTRACTOR requests for observation of the work. The CONTRACTOR shall include anticipated observation requests at weekly update of scheduled activities.

PART 2 - PRODUCTS (NOT USED)

PART 3 - EXECUTION

3.01 INSTALLATION

A. Inspection: Inspect materials or equipment upon arrival on the job site, prior to installation and reject damaged and defective items.

B. Measurements: Verify measurements and dimensions of the WORK, as an integral step of starting each installation.

C. Manufacturer's Instructions: Where installations include manufactured products, compliance with manufacturer's applicable instructions and recommendations for installation, to whatever extent these are more explicit or more stringent than applicable requirements indicated in Contract Documents is required.

END OF SECTION

SECTION 01 5626 – TEMPORARY FENCING

PART 1 - GENERAL

1.01 SUMMARY

A. Contractor shall determine temporary fence type, layout, and location of gates. Construction and maintenance of temporary fencing shall be provided by the contractor.

B. In general, the overall site of the existing Wastewater Facility is already fenced. Sections of which will have to be removed and replaced as dictated by the sequence of construction. It will be the Contractor's responsibility to determine their needs to secure the yard/staging areas as well as any and all construction sites or activities within the project. It is the OWNER'S opinion that the plastic mesh fence will be sufficient to provide safety and security surrounding the work activities; however, it is the contractor's responsibility to make the final determination. The OWNER will not be responsible in any manner for any missing, stolen, or damaged to any and all contractor property, yard, equipment, or construction activity, this is the contractor's responsibility.

1.02 SUBMITTALS

A. Submit in accordance with Section 01 3300 – Submittal Procedures.
   1. Shop drawing indicating layout of temporary fencing, location and size of gates, existing pavement and roads, access to fire hydrants and hose connections, and other site-specific conditions. Prepare drawing after site observation and verification of existing conditions.

PART 2 - PRODUCTS

2.01 TEMPORARY CHAIN LINK FENCING

A. Unless otherwise indicated, type of temporary chain link fencing shall be Contractor's option. Following types are acceptable:
   1. New Materials or previously used salvage chain link fencing in good condition.
   2. Posts: Galvanized steel pipe of diameter to provide rigidity. Post shall be suitable for setting in concrete footings, driving into ground, anchoring with base plates, or inserting in precast concrete blocks.
   3. Fabric: Woven galvanized steel wire mesh. Provide in continuous lengths to be wire tied to fence posts or prefabricated into modular pipe-framed fence panels.

B. Gates: Provide personnel and vehicle gates of the quantity and size required for functional access to site.
   1. Fabricate of same material as used for fencing
   2. Vehicle gates:
      a. Minimum width: 20 feet to allow access for emergency vehicles
      b. Capable of manual operation by one person.

2.02 PLASTIC MESH FENCING

A. Where required to provide visual warning and control, provide plastic mesh fencing supported by steel posts driven into ground or set in precast concrete blocks

B. Height: 36 inches minimum

C. Color: Safety orange

PART 3 - EXECUTION

3.01 LAYOUT

A. Access: Provide gates for personnel, delivery of materials, and access by emergency vehicles.

3.02 INSTALLATION

A. Plastic mesh fencing: Space steel support posts to ensure mesh remains vertical and at proper height. Securely tie mesh to posts.

3.03 MAINTENANCE AND REMOVAL

A. Maintain fencing in good condition. If damaged, immediately repair.

B. Remove temporary fencing upon completion of Work or when no longer required for security or control. Backfill holes and compact. Holes in pavement shall be surfaced to match existing paving. Repair damage caused by installation of temporary fencing.

END OF SECTION

SECTION 01 5713 – TEMPORARY EROSION AND SEDIMENT CONTROL

PART 1 - GENERAL

1.01 SECTION INCLUDES

A. Prevention of erosion due to construction activities.

B. Prevention of sedimentation of waterways, open drainage ways, and storm and sanitary sewers due to construction activities.

C. Restoration of areas eroded due to insufficient preventive measures.

1.02 REFERENCE STANDARDS: Most recently approved and published editions of:

A. ASTM D4355 - Deterioration of Geotextiles by Exposure to Light, Moisture, and Heat in a Xenon Arc Type Apparatus.

B. ASTM D4491 - Water Permeability of Geotextiles by Permittivity.

C. ASTM D4533 - Trapezoid Tearing Strength of Geotextiles

D. ASTM D4632 - Grab Breaking Load and Elongation of Geotextiles.

E. ASTM D4751 - Determining Apparent Opening Size of a Geotextile.

F. ASTM D4873 - Identification, Storage, and Handling of Geosynthetic Rolls and Samples.

G. EPA (NPDES) - National Pollutant Discharge Elimination System (NPDES), Construction General Permit.

H. FHWA FLP-94-005 - Best Management Practices for Erosion and Sediment Control; Federal Highway Administration.

I. USDA TR-55 - Urban Hydrology for Small Watersheds; USDA Natural Resources Conservation Service.

1.03 PERFORMANCE REQUIREMENTS

1.04 Perform all work and take all measures necessary to control soil erosion resulting from construction operations to prevent the flow of sediment from the site, to contain construction materials (including excavation and backfill), and to stabilize soil banks from erosion caused by stormwater flood zones so as to prevent damage to the adjacent water courses and to the project site.

A. Do not employ any construction method that violates a rule, regulation, guideline, or procedure established by Federal, State, or local agencies having jurisdiction over the environmental effects of construction.

B. Pollutants such as chemicals, fuels, lubricants, bitumen, raw sewage, and other harmful waste shall not be discharged into or alongside of any body of water or into natural or man-made channels leading thereto.

C. Prepare and submit a Stormwater Pollution Prevention Plan (SWPPP) to the ENGINEER for his records in accordance with ADEQ and with the plans as provided with in the Construction Documents. The CONTRACTOR is responsible for all aspects of this plan, its monitoring, maintaining of the reports and keeping a copy of documents on site as required by ADEQ.

D. Prepare and submit a monitoring program and reporting plan to the ENGINEER for his records in accordance with ADEQ. Submit to the ENGINEER for his records on a monthly basis copies of the monitoring reports taken throughout the month.

E. Prepare and submit the Notice of Intent (NOI) as required by ADEQ. Submit Copy of NOI to the ENGINEER for his records.

F. Comply with all requirements of U.S. Environmental Protection Agency for erosion and sedimentation control, as specified for the National Pollutant Discharge Elimination System (NPDES), Phases I and II, under requirements for the Construction General Permit (CGP), whether the project is required by law to comply or not.

G. Timing: Put preventive measures in place as soon as possible after disturbance of surface cover and before precipitation occurs.

H. Storm Water Runoff: Control increased storm water runoff due to disturbance of surface cover due to construction activities for this project.
   1. Prevent runoff into storm and sanitary sewer systems, including open drainage channels, in excess of actual capacity or amount allowed by authorities having jurisdiction, whichever is less.
   2. Anticipate runoff volume due to the most extreme short term and 24-hour rainfall events that might occur in 25 years.

I. Erosion on Site: Minimize wind, water, and vehicular erosion of soil on project site due to construction activities for this project.
   1. Control movement of sediment and soil from temporary stockpiles of soil.
   2. Prevent development of ruts due to equipment and vehicular traffic.
   3. If erosion occurs due to non-compliance with these requirements, restore eroded areas at no cost to Owner.

J. Erosion Off Site: Prevent erosion of soil and deposition of sediment on other properties caused by water leaving the project site due to construction activities for this project.
   1. Prevent windblown soil from leaving the project site.
   2. Prevent tracking of mud onto public roads outside site.
   3. Prevent mud and sediment from flowing onto sidewalks and pavements.
   4. If erosion occurs due to non-compliance with these requirements, restore eroded areas at no cost to Owner.

K. Sedimentation of Waterways On Site: Prevent sedimentation of waterways on the project site, including rivers, streams, lakes, ponds, open drainage ways, storm sewers, and sanitary sewers.
   1. If sedimentation occurs, install or correct preventive measures immediately at no cost to Owner; remove deposited sediments; comply with requirements of authorities having jurisdiction.
   2. If sediment basins are used as temporary preventive measures, pump dry and remove deposited sediment after each storm.

L. Sedimentation of Waterways Off Site: Prevent sedimentation of waterways off the project site, including rivers, streams, lakes, ponds, open drainage ways, storm sewers, and sanitary sewers.
   1. If sedimentation occurs, install or correct preventive measures immediately at no cost to Owner; remove deposited sediments; comply with requirements of authorities having jurisdiction.

M. Open Water: Prevent standing water that could become stagnant.

N. Maintenance: Maintain temporary preventive measures until permanent measures have been established.

1.05 SUBMITTALS

A. See Section 01 3300 – Submittal Procedures.

B. Stormwater Prevention Plan:
   1. Submit not less than 30 days prior to anticipated start of clearing, grading, or other work involving disturbance of ground surface cover.
   2. Include:
      a. Site plan identifying soils and vegetation, existing erosion problems, and areas vulnerable to erosion due to topography, soils, vegetation, or drainage.
      b. Site plan identifying soils and vegetation, existing erosion problems, and areas vulnerable to erosion due to topography, soils, vegetation, or drainage.
      c. Site plan showing grading; new improvements; temporary roads, traffic accesses, and other temporary construction; and proposed preventive measures.
      d. Where extensive areas of soil will be disturbed, include storm water flow and volume calculations, soil loss predictions, and proposed preventive measures.
      e. Schedule of temporary preventive measures, in relation to ground disturbing activities.
      f. Other information required by law.
      g. Format required by law is acceptable, provided any additional information specified is also included.
      h. Obtain the approval of the Plan by authorities having jurisdiction.
      i. Obtain the approval of the Plan by Owner.

C. Certificate: Mill certificate for silt fence fabric attesting that fabric and factory seams comply with specified requirements, signed by legally authorized official of manufacturer; indicate actual minimum average roll values; identify fabric by roll identification numbers.

D. Inspection Reports: Submit report of each inspection; identify each preventive measure, indicate condition, and specify maintenance or repair required and accomplished.

E. Maintenance Instructions: Provide instructions covering inspection and maintenance for temporary measures that must remain after Substantial Completion.

PART 2 - PRODUCTS

2.01 MATERIALS

A. Mulch: Use one of the following:
   1. Straw or hay
   2. Wood waste, chips, or bark
   3. Erosion control matting or netting
   4. Cutback asphalt
   5. Polyethylene film, where specifically indicated only

B. Grass Seed for Temporary Cover: Select a species appropriate to climate, planting season, and intended purpose. If same area will later be planted with permanent vegetation, do not use species known to be excessively competitive or prone to volunteer in subsequent seasons.

C. Bales: Air dry, rectangular straw bales.
   1. Cross Section: 14 by 18 inches, minimum.
   2. Bindings: Wire or string, around long dimension.

D. Bale Stakes: One of the following, minimum 3 feet long:
   1. Steel U- or T-section, with minimum mass of 1.33 lb. per linear foot.
   2. Wood, 2 by 2 inches in cross section.

E. Silt Fence Fabric: Polypropylene geotextile resistant to common soil chemicals, mildew, and insects; non-biodegradable; in longest lengths possible; fabric including seams with the following minimum average roll lengths:
   1. Average Opening Size: 30 U.S. Std. Sieve, maximum, when tested in accordance with ASTM D4751.
   2. Permittivity: 0.05 sec^-1, minimum, when tested in accordance with ASTM D4491.
   3. Ultraviolet Resistance: Retaining at least 70 percent of tensile strength, when tested in accordance with ASTM D4355 after 500 hours exposure.
   4. Tensile Strength: 100 lb-f, minimum, in cross-machine direction; 124 lb-f, minimum, in machine direction; when tested in accordance with ASTM D4632.
   5. Elongation: 15 to 30 percent, when tested in accordance with ASTM D4632.
   6. Tear Strength: 55 lb-f, minimum, when tested in accordance with ASTM D4533.
   7. Color: Manufacturer's standard, with embedment and fastener lines preprinted.
   8. Manufacturers:
      a. TenCate: www.tencate.com.
      b. North American Green: www.nagreen.com.
      c. Propex Geosynthetics: www.geotextile.com

F. Silt Fence Posts: One of the following, minimum 5 feet long:
   1. Steel U- or T-section, with minimum mass of 1.33 lb per linear foot.
   2. Softwood, 4 by 4 inches in cross section.
   3. Hardwood, 2 by 2 inches in cross section.
   4. Bank stabilization shall be durable UV resistant high performance turf reinforcement mats (HP TRMs). Tensile strength of 4000 lb/ft meets US EPA definition of a high performance TRM. Acceptable products are Pyramat or ENGINEER-approved equal.

PART 3 - EXECUTION

3.01 EXAMINATION

A. Examine site and identify existing features that contribute to erosion resistance; maintain such existing features to greatest extent possible.

3.02 PREPARATION

A. Schedule work so that soil surfaces are left exposed for the minimum amount of time.

3.03 SCOPE OF PREVENTIVE MEASURES

A. In all cases, if permanent erosion resistant measures have been installed temporary preventive measures are not required.

B. Construction Entrances: Traffic-bearing aggregate surface.
   1. Width: As required; 20 feet, minimum.
   2. Length: 50 feet, minimum.
   3. Provide at each construction entrance from public right-of-way.
   4. Where necessary to prevent tracking of mud onto right-of-way, provide wheel washing area out of direct traffic lane, with drain into sediment trap or basin.

C. Linear Sediment Barriers: Made of silt fences.
   1. Provide linear sediment barriers:
      a. Along downhill perimeter edge of disturbed areas, including soil stockpiles.
      b. Along the top of the slope or top bank of drainage channels and swales that traverse disturbed areas.
      c. Along the toe of cut slopes and fill slopes.

d. Perpendicular to flow across the bottom of existing and new drainage channels and swales that traverse disturbed areas or carry runoff from disturbed areas; space at maximum of 200 feet apart.
e. Across the entrances to culverts that receive runoff from disturbed areas.
f. Space sediment barriers with the following maximum slope length upslope from barrier:
   1) Slope of Less Than 2 Percent: 100 feet.
   2) Slope Between 2 and 5 Percent: 75 feet.
   3) Slope Between 5 and 10 Percent: 50 feet.
   4) Slope Between 10 and 20 Percent: 25 feet.
   5) Slope Over 20 Percent: 15 feet.

D. Storm Drain Curb Inlet Sediment Trap: Protect each curb inlet using one of the following measures:
1. Filter fabric wrapped around hollow concrete blocks blocking entire inlet face area; use one piece of fabric wrapped at least 1-1/2 times around concrete blocks and secured to prevent dislodging; orient cores of blocks so runoff passes into inlet.
2. Straw bale row blocking entire inlet face area; anchor into pavement.

E. Storm Drain Drop Inlet Sediment Traps: As detailed on drawings.

F. Temporary Splash Pads: Stone aggregate over filter fabric; size to suit application; provide at downspout outlets and storm water outlets.

G. Soil Stockpiles: Protect using one of the following measures:
1. Cover with polyethylene film, secured by placing soil on outer edges.
2. Cover with mulch at least 4 inches thickness of pine needles, sawdust, bark, wood chips, or shredded leaves, or 6 inches of straw or hay.

H. Mulching: Use only for areas that may be subjected to erosion for less than 6 months.
1. Wood Waste: Use only on slopes 3:1 or flatter; no anchoring required.
2. Asphalt: Use only where no traffic, either vehicular or pedestrian, is anticipated.

I. Temporary Seeding: Use where temporary vegetated cover is required.

3.04 INSTALLATION

A. Traffic-Bearing Aggregate Surface:
1. Excavate minimum of 6 inches.
2. Place geotextile fabric full width and length, with minimum 12 inch overlap at joints.
3. Place and compact at least 6 inches of 1.5 to 3.5 inch diameter stone.

B. Silt Fences:
1. Store and handle fabric in accordance with ASTM D4873.
2. Where slope gradient is less than 3:1 or barriers will be in place less than 6 months, use nominal 16 inch high barriers with minimum 36 inch long posts spaced at 6 feet maximum, with fabric embedded at least 4 inches in ground.
3. Where slope gradient is steeper than 3:1 or barriers will be in place over 6 months, use nominal 28 inch high barriers, minimum 48 inch long posts spaced at 6 feet maximum, with fabric embedded at least 6 inches in ground.
4. Where slope gradient is steeper than 3:1 and vertical height of slope between barriers is more than 20 feet, use nominal 32 inch high barriers with woven wire reinforcement and steel posts spaced at 4 feet maximum, with fabric embedded at least 6 inches in ground.
5. Install with top of fabric at nominal height and embedment as specified.
6. Embed bottom of fabric in a trench on the upslope side of fence, with 2 inches of fabric laid flat on bottom of trench facing upslope; backfill trench and compact.

7. Do not splice fabric width; minimize splices in fabric length; splice at post only, overlapping at least 18 inches, with extra post.
8. Fasten fabric to wood posts using one of the following:
   a. Four ¾-inch diameter, 1 inch long, 14-gauge nails.
   b. Five 17-gauge staples with 3/4 inch wide crown and ½-inch legs.
   c. Fasten fabric to steel posts using wire, nylon cord, or integral pockets.
   d. Wherever runoff will flow around end of barrier or over the top, provide temporary splash pad or other outlet protection; at such outlets in the run of the barrier, make barrier not more than 12 inches high with post spacing not more than 4 feet.

C. Straw Bale Rows:
1. Install bales in continuous rows with ends butting tightly, with one bale at each end of row turned uphill.
2. Install bales so that bindings are not in contact with the ground.
3. Embed bales at least 4 inches in the ground.
4. Anchor bales with at least two stakes per bale, driven at least 18 inches into the ground; drive first stake in each bale toward the previously placed bale to force bales together.
5. Fill gaps between ends of bales with loose straw wedged tightly.
6. Place soil excavated for trench against bales on the upslope side of the row, compacted.

D. Mulching Over Large Areas:
1. Dry Straw and Hay: Apply 2-1/2 tons per acre; anchor using dull disc harrow or emulsified asphalt applied using same spraying machine at 100 gallons of water per ton of mulch.
2. Wood Waste: Apply 6 to 9 tons per acre.
3. Asphalt: Apply at 1,200 gallons per acre.
4. Erosion Control Matting: Comply with manufacturer's instructions.

E. Mulching Over Small and Medium Areas:
1. Dry Straw and Hay: Apply 4 to 6 inches depth.
2. Wood Waste: Apply 2 to 3inches depth.
3. Pine Needles: Apply 2 to 3 inches depth.
4. Asphalt: Apply 1/4 gallon per square yard.
5. Erosion Control Matting: Comply with manufacturer's instructions.

F. Temporary Seeding:
1. When hydraulic seeder is used, seedbed preparation is not required.
2. When surface soil has been sealed by rainfall or consists of smooth undisturbed cut slopes, and conventional or manual seeding is to be used, prepare seedbed by scarifying sufficiently to allow seed to lodge and germinate.
3. If temporary mulching was used on planting area but not removed, apply nitrogen fertilizer at 1 pound per 1,000 sq. ft.
4. On soils of very low fertility, apply 10-10-10 fertilizer at rate of 12 to 16 pounds per 1,000 sq. ft.
5. Incorporate fertilizer into soil before seeding.
6. Apply seed uniformly; if using drill or cultipacker seeders place seed ½- to 1 inch deep.
7. Irrigate as required to thoroughly wet soil to depth that will ensure germination, without causing runoff or erosion.
8. Repeat irrigation as required until grass is established.

3.05 MAINTENANCE

A. Inspect preventive measures weekly, within 24 hours after the end of any storm that produces 0.5 inches or more rainfall at the project site, and daily during prolonged rainfall.

B. Repair deficiencies immediately.

C. Silt Fences:
   1. Promptly replace fabric that deteriorates unless need for fence has passed.
   2. Remove silt deposits that exceed one-third of the height of the fence.
   3. Repair fences that are undercut by runoff or otherwise damaged, whether by runoff or other causes.

D. Straw Bale Rows:
   1. Promptly replace bales that fall apart or otherwise deteriorate unless need has passed.
   2. Remove silt deposits that exceed one-half of the height of the bales.
   3. Repair bale rows that are undercut by runoff or otherwise damaged, whether by runoff or other causes.

E. Clean out temporary sediment control structures weekly and relocate soil on site.

F. Place sediment in appropriate locations on site; do not remove from site.

3.06 CLEAN UP

A. Remove temporary measures after permanent measures have been installed, unless permitted to remain by Engineer.

B. Clean out temporary sediment control structures that are to remain as permanent measures.

C. Where removal of temporary measures would leave exposed soil, shape surface to an acceptable grade and finish to match adjacent ground surfaces.

END OF SECTION

SECTION 01 5719 –TEMPORARY ENVIRONMENTAL CONTROLS

PART 1 - GENERAL

1.01 EXPLOSIVES AND BLASTING

A. The use of explosives on the WORK will not be permitted.

1.02 RUBBISH CONTROL

A. During the progress of the WORK, the CONTRACTOR shall keep the Site and other areas used by it in a neat and clean condition, and free from any accumulation of rubbish. Dispose of all rubbish and waste materials of any nature occurring at the Site, and shall establish regular intervals of collection and disposal of such materials and waste. Keep its haul roads free from dirt, rubbish and unnecessary obstructions resulting from its operations. Disposal of all rubbish and surplus materials shall be off the Site in accordance with local codes and ordinances governing locations and methods of disposal, and in conformance with all applicable safety laws, and to the particular requirements of Part 1926 of the OSHA Safety and Health Standards for Construction.

1.03 SANITATION

A. The CONTRACTOR shall provide adequate sanitary facilities for the use of those employed on the WORK. Such facilities shall be made available when the first employees arrive on the site of the WORK, shall be properly secluded from public observation, and shall be constructed and maintained during the progress of the Work in suitable numbers and at such points and in such manner as may be required.

B. The CONTRACTOR shall maintain the sanitary facilities in a satisfactory and sanitary condition at all times and shall enforce their use. He shall rigorously prohibit the committing of nuisances on the site of the WORK, on the lands of the OWNER, or on adjacent property.

C. Toilet Facilities: The CONTRACTOR shall provide fixed or portable chemical toilets wherever needed for the use of employees. Toilets at construction job sites shall conform to the requirements of Part 1926 of the OSHA Standards for Construction.

D. Sanitary and Other Organic Wastes: The CONTRACTOR shall establish a regular daily collection of all sanitary and organic wastes. All wastes and refuse from sanitary facilities provided or organic material wastes from any other source related to operations shall be disposed of away from the Site in accordance with all laws and regulations pertaining thereto.

1.04 CHEMICALS

A. All chemicals used or furnished by the CONTRACTOR for or during project construction, whether defoliant, soil sterilant, herbicide, pesticide, disinfectant, polymer, reactant or of other classification, shall show approval of either the U.S. Environmental Protection Agency or the U.S. Department of Agriculture. Use of all such chemicals and disposal of residues shall be in strict accordance with the printed instructions of the manufacturer.

1.05 CULTURAL RESOURCES

A. Attention is directed to the National Historic Preservation Act of 1966 (16 U.S.C. 470) and 36 CFR 800, which provides for the preservation of potential historical architectural, archaeological, or cultural resources (hereinafter called "cultural resources").

B. Conform to the applicable requirements of the National Historic Preservation Act of 1966 as it relates to the preservation of cultural resources.

C. In the event potential cultural resources are discovered during subsurface excavations at the site of construction, the following procedures shall be instituted:
   1. The CONTRACTOR shall issue a Field Order directive to cease all construction operations at the location of such potential cultural resources find.
   2. Such Field Order shall be effective until such time as a qualified archaeologist can be called to assess the value of these potential cultural resources and make recommendations to the State Historic Preservation Office.

D. If the archaeologist determines that the potential find is a bona fide cultural resource, at the direction of the State Historic Preservation Office, WORK shall be suspended at the location of the find under the provisions for changes contained in the Contractual Agreement.

PART 2 - PRODUCTS (NOT USED)

PART 3 - EXECUTION (NOT USED)

END OF SECTION

SECTION 01 5726 – SITE WATERING FOR DUST CONTROL

PART 1– GENERAL

1.01 DUST ABATEMENT

A. Preventative measures to limit the production of dust in amounts damaging to property, cultivated vegetation or domestic animals, or causing a nuisance to persons living in or occupying buildings in the vicinity shall be taken in to account. Responsibility for any damage resulting from dust originating from its operations shall be the CONTRACTOR's. The dust abatement measures shall be maintained at all times during construction of the project, in accordance with the requirements of jurisdictional agency.

PART 2 – PRODUCTS (NOT USED)

PART 3 – EXECUTION

3.01 GENERAL

A. The CONTRACTOR shall take necessary measures to control any and all dust related to or as a result of construction activities under this Contract. The CONTRACTOR shall be responsible for obtaining a Dust Control Permit as required by the jurisdictional agency.

B. The water necessary for the dust control operation will be Owner-furnished; beyond that, the CONTRACTOR shall be responsible for providing whatever means necessary to accomplish the task of Dust Control. The CONTRACTOR shall be responsible for any damage resulting from dust originating from construction activities under this Contract.

END OF SECTION

SECTION 01 7113 – MOBILIZATION

PART 1 - GENERAL

1.01 THE REQUIREMENT

A. Mobilization shall include verification by the CONTRACTOR that all permits have been obtained; moving onto the site of all plant and equipment; furnishing and erecting plants, temporary buildings, and other construction facilities; and implementing security requirements; all as required for the proper performance and completion of the WORK. Mobilization shall include the following principal items:

1. Moving onto the site all materials and equipment required for first month operations
2. Installing temporary construction power, wiring and lighting facilities if applicable
3. Establishing a fire protection system as required.
4. Developing a construction water supply as required.
5. Providing field office trailers, complete with all specified furnishings and utility services (if available) including telephones, telephone appurtenances and copying machine
6. Providing all on-site communication facilities including telephones
7. Providing on-site sanitary facilities and potable water facilities
8. Arranging for and erection of work and storage yard
9. Obtaining all required permits for the project.
10. Comply with all OSHA required notices and establish a safety program
11. Having the superintendent or authorized representatives at the job site as required for execution of the work
12. Provide and implement an on-site Dust Control Plan.
13. Upon start of construction, the CONTRACTOR shall furnish and install a Project Identification Sign. The sign shall be painted by a professional experienced in sign painting. The paint used shall resist weathering and fading for the scheduled construction project duration. Two 4”X4”X8’ supports shall be supplied by the CONTRACTOR. The project identification sign shall be securely bolted to the supports and shall be installed and located as directed by the OWNER. The CONTRACTOR shall repair the sign structure and supports as necessary for the duration of the project. The sign and supports shall be maintained in a neat and clean condition. The CONTRACTOR shall remove and properly dispose of the sign upon completion of the project. Costs associated with supplying, erecting, and maintaining the project identification sign shall be considered incidental to the contract and no separate payment will be allowed.

PART 2 - PRODUCTS (NOT USED)

PART 3 - EXECUTION (NOT USED)

END OF SECTION

SECTION 01 7123 – FIELD ENGINEERING

PART 1 - GENERAL

1.01 SUMMARY

A. Section Includes: Field engineering to establish lines and grades for the WORK.

1.02 THE REQUIREMENT

A. The CONTRACTOR shall provide the surveying and staking control for the project. In addition, the CONTRACTOR shall provide the staking of the property and easement limits, clearing limits, influent and effluent lines, utilities, and excavation limits staking of structure corners with offsets as necessary for construction.

B. The CONTRACTOR shall provide all necessary staking following the OWNER initial staking as completed during the design of this project, as required to construct all items included in the plans and Scope of Work.

C. The CONTRACTOR shall survey the location of any underground utility line that the CONTRACTOR installs prior to backfilling. This shall include all joints, valves, structure, hydrants and services.

1.03 QUALITY ASSURANCE

A. Qualifications of Surveyor or Engineer: Registered civil engineer or land surveyor in state where Project is located.

B. Accuracy of stakes, alignments, and grades may be checked randomly by ENGINEER.
   1. Notice of when checking will be conducted will be given.
   2. When notice of checking is given, postpone parts of the Work affected by stakes, alignments or grades to be checked until checked.
   3. Do not assume that ENGINEER's check substitutes or complements required field quality control procedures.

1.04 CONSTRUCTION STAKES, LINES, AND GRADES

A. Execute the Work in accordance with the lines and grades indicated.

B. Make distances and measurements on horizontal planes, except elevations and structural dimensions.

1.05 SURVEY REFERENCE POINTS

A. Basic reference line, a beginning point on basic reference line, and a bench mark will be provided, by OWNER as defined in the Contract.

B. From these reference points, establish other control and reference points as required to properly lay out the Work.

C. Locate and protect control points prior to starting sitework, and preserve permanent reference points during construction.
   1. Make no changes or relocations without prior written notice.
   2. Replace Project control point, when lost or destroyed, in accordance with original survey control.

D. Set monuments for principal control points and protect them from being disturbed and displaced.
   1. Re-establish disturbed monuments.
   2. When disturbed, postpone parts of the Work that are governed by disturbed monuments until such monuments are re-established.

1.06 PROJECT SURVEY REQUIREMENTS

A. Establish minimum of 2 permanent bench marks on site referenced to data established by survey control points.

B. Record permanent bench mark locations with horizontal and vertical data on Project Record Documents.

C. Assume responsibility for accuracy of stakes, alignments, and grades by performing verifications and checking in accordance with standard surveying practice.

D. Locate all utilities installed within the project prior to backfilling. Make a complete survey at the line, hub, or joint locations.

1.07 RECORD DOCUMENTS

A. Once the CONTRACTOR has reached substantial completion the CONTRACTOR will survey the site in preparation of Record Documents in conjunction with the CONTRACTORS supplied as-built as specified in the applicable Sections of Division 01 – General Requirements.

B. Carefully note all deviations or changes from the original drawings and maintain complete, accurate log of control points and survey.

C. Submit all utility locate information and surveyed information in hard copy and AutoCAD format.

D. Affix civil engineer's or land surveyor's signature and registration number to Record Drawing to certify accuracy of information shown.

PART 2 - PRODUCTS (NOT USED)

PART 3 - EXECUTION

3.01 GENERAL

A. The CONTRACTOR shall provide the initial surveying and staking control for the project. In addition, the CONTRACTOR shall provide the initial staking of the property and easement limits, clearing limits, influent and effluent lines, utilities, and excavation limits staking of structure corners with offsets as necessary for construction.

B. The CONTRACTOR shall provide all required field survey as necessary to complete the work as defined in the contract.

END OF SECTION

SECTION 01 7700 – CLOSEOUT PROCEDURES

PART 1 - GENERAL

1.01 SUBSTANTIAL COMPLETION

A. Substantial completion is based on the guideline established in the Contract Documents.

B. CONTRACTOR shall submit written certification that the project construction phase is entering the substantial completion phase.

C. CONTRACTOR to submit all applicable certification and test results, including but not limited to:
   1. Hydrostatic Test for Concrete Structures
   2. Pipe line pressure tests
   3. Geotechnical test
   4. Concrete Tests
   5. Equipment Field Service Installation, Certification, Certificate of Warranty, and Evidence of Training per applicable sections of Division 01 – General Requirements
   6. Certifications of all special inspections
   7. Clean water testing
   8. Electrical testing and inspection certification
   9. Equipment and process instrumentation program testing and certification
   10. And any applicable test required by the contract documents

D. Submit list of items to be completed or corrected but will not impact substantial completion.

E. Engineer will inspect within seven days after receipt of certification, together with a representative.

F. Should ENGINEER consider that work is substantially complete:
   1. Prepare and submit to ENGINEER a list of the items to be completed or corrected, as determined by on-site observation.
   2. Engineer will prepare and issue a Certificate of Substantial Completion, containing:
      a. Date of Substantial Completion.
      b. List of items to be completed or corrected, verified, and amended.
      c. The time required to complete or correct work of listed items.
      d. Responsibilities for:
         1) Insurance
         2) Utilities
         3) Operation of mechanical, electrical, and other systems
         4) Maintenance and cleaning
         5) Security
      e. Signatures of: ENGINEER
   3. Complete work listed for completion or correction, within designated time.

E. Should ENGINEER consider that work is not substantially complete:
   1. He shall immediately notify, in writing, stating reasons.
   2. Complete work, and send second written notice to ENGINEER, certifying that Project, or designated portion of project of substantially complete.
   3. ENGINEER will re-review work.

1.02 FINAL INSPECTION

A. Submit written certification that:
   1. Contract Documents have been reviewed.

2. Project has been inspected for compliance with Contract Documents.
3. Work has been completed in accordance with Contract Documents.
4. Equipment and systems have been tested in presence of ENGINEER and are operational.
5. Project is completed and ready for final inspection from jurisdictional agency(ies).

B. ENGINEER will make final on-site observation/review within seven (7) days after receipt of certification.

C. Should ENGINEER consider that work is finally complete in accordance with requirements of Contract Documents, he shall prepare and issue the following:
1. Certificate of Completion;
2. A Request to make Project Closeout submittals.

D. Should ENGINEER consider that work is not finally complete:
1. He shall notify, in writing, stating reasons.
2. Take immediate steps to remedy the stated deficiencies, and send second written notice to ENGINEER certifying that work is complete.
3. ENGINEER will re-review the work.

1.03 CLOSEOUT SUBMITTALS

A. Submit the following Closeout Submittals upon completion of the Work and at least 7 days prior to submitting Application for Final Payment:
1. Evidence of Compliance and Closeout from Jurisdictional Agency(ies)
2. Project Record Documents (As-built Drawings and Documentation)
3. Operation and Maintenance Manuals
4. Warranties and Bonds
5. Keys and Keying Schedule
6. Evidence of Payment and Release of Liens as outlined in Conditions of the Contract
7. Release of claims as outlined in the Conditions of the Contract
8. Certificate of Final Completion

1.04 EVIDENCE OF COMPLIANCE WITH REQUIREMENTS OF GOVERNING AUTHORITIES

A. Submit the following:
1. Authorization of Construction (by OWNER)
2. APP Permit (by OWNER)
3. 4.01 Permit (by OWNER)
4. Certificate of Occupancy:
    1) Yavapai County
5. Certificate of Inspection:
    a. Mechanical:
        1) Town of Jerome.
    b. Electrical:
        1) Town of Jerome.

1.05 PROJECT RECORD DOCUMENTS

A. Deliver record documents with the transmittal letter containing date, Project title, list of documents, and signature of the CONTRACTOR.

1.06 WARRANTIES AND BONDS

A. Provide executed Warranty or Guaranty Form if required by Contract Documents.

B. Provide specified additional warranties, guarantees, and bonds form manufacturers and suppliers.

1.07 FINAL CLEANING UP

A. The work will not be considered as completed and final payment made until all final cleanup has been done in a satisfactory manner. Contractor shall obtain clean up verification from Owner. Reference applicable sections of Division 01 – General Requirements.

1.08 CERTIFICATE OF FINAL COMPLETION

A. When operational test has been successfully completed, ENGINEER will certify that new facilities are operationally complete. ENGINEER will submit a list of known items (punch list) still to be completed or corrected prior to contract completion.

B. List of items to be completed or corrected will be amended as items are resolved by Contractor.

C. When all items have been completed or corrected, submit written certification that the entire work is complete in accordance with the Contract Documents and request final inspection.

D. Final Clean up verification letter from Owner.

E. Upon completion of final inspection, ENGINEER will either prepare a written acceptance of the entire work or advise the Contractor of work not complete. If necessary, inspection procedures will be repeated.

1.09 FINAL APPLICATION FOR PAYMENT

A. Submit final applications in accordance with the requirements of the Contractual Agreement.

1.10 FINAL CERTIFICATE FOR PAYMENT

A. ENGINEER will issue final certificate in accordance with provisions of Contractual Agreement.

PART 2 - PRODUCTS (NOT USED)

PART 3 - EXECUTION (NOT USED)

END OF SECTION

SECTION 01 7823 – OPERATION AND MAINTENANCE DATA

PART 1 - GENERAL

1.01 THE REQUIREMENT

A. Compile product data and related information appropriate for maintenance and operation of equipment furnished under the Contract. Prepare Operating and Maintenance Manual as specified.

B. Instruct OWNER's personnel in the maintenance and operation of equipment and systems as outlined herein.

C. In addition to Operating and Maintenance Data, the Manufacturer's printed recommended Installation Practice shall be included. If not part of the Operating and Maintenance Manual, separate written installation instructions shall be provided, serving to assist the CONTRACTOR in equipment installation.

1.02 OPERATING AND MAINTENANCE MANUAL

A. Every piece of equipment furnished and installed shall be provided with complete maintenance and operations manuals, unless noted otherwise. These shall be detailed in instructions to the OWNER's personnel. After approval, the CONTRACTOR shall store all manuals until the completion of the project or until requested by the ENGINEER. The manuals will be stored and delivered to the OWNER in an organized format.

B. Provide two hard copies and one (1) electronic version in PDF format. The hard copy shall be delivered to the jobsite shipped with the equipment and one (1) copies shall be delivered to the CONTRACTOR's main office. The PDF copy shall be electronically delivered to the OWNER, the ENGINEER, and the CONTRACTOR.

1.03 SUBMITTALS

A. Submittals shall be made in accordance with Section 01 3300 – Submittal Procedures.

1.04 CONTENT OF MANUAL

A. Neatly typewritten table of contents for each volume, arranged in systematic order.
   1. CONTRACTOR, name of responsible principal, address and telephone number.
   2. A list of each product required to be included, indexed to the content of the volume.
   3. List, with each product, the name, address and telephone number of:
      a. Subcontractor or installer.
      b. Maintenance contractor, as appropriate.
      c. Identify the area of responsibility of each.
      d. Local source of supply for parts and replacement.
   4. Identify each product, by product name and other identifying symbols as set forth in Contract Documents.

B. Product Data:
   1. Include only those sheets, which are pertinent to the specific product. References to other sizes and types or models of similar equipment shall be deleted or lined out.
   2. Annotate each sheet to:
      a. Clearly identify the specific product or part installed.
      b. Clearly identify the data applicable to the installation.
      c. Provide a parts list for all new equipment items, with catalog numbers and other data necessary for ordering replacement parts.
      d. Delete references to inapplicable information.

3. Clear and concise instructions for the operation, adjustment, lubrication, and other maintenance of the equipment including a lubrication chart and maintenance schedule or frequency.

C. Drawings:
   1. Supplement product data with drawings as necessary to clearly illustrate:
      a. Relations of component parts of equipment and systems.
      b. Control and flow diagrams.
   2. Coordinate drawings with information in Project Record Documents to assure correct illustration of complete installation.

D. Written text, as required to supplement product data for the particular installation:
   1. Organize in a consistent format under separate headings for different procedures.
   2. Provide a logical sequence of instructions for each procedure.

E. Copy of each warranty, bond and service contract issued: Provide information sheet for OWNER's personnel.
   1. Proper procedures in the event of failure.
   2. Instances which might affect the validity of warranties or bonds.

F. The manuals must be approved by the OWNER before final payment on the equipment is made.

PART 2 - PRODUCTS (NOT USED)

PART 3 - EXECUTION (NOT USED)

END OF SECTION

SECTION 01 7839 – PROJECT RECORD DOCUMENTS

PART 1 - GENERAL

1.01 RECORD DRAWINGS

A. The CONTRACTOR and its Subcontractors at the start of the project shall provide a clean set of Drawings and mark on them, in large writing “As Built.” This set of drawings will be kept at the job site trailer and used to indicate with a red pencil, pen or marker the “As Built” conditions of the project. These drawings will be updated as the work progresses to reflect the “As Built” conditions.

B. The CONTRACTOR shall be responsible to ensure that the “As Built” drawings are being kept up to date.

C. Upon substantial completion the CONTRACTOR shall obtain all “As Built” drawings and review them for accuracy and completeness, this includes surveying of utilities as required by these Specifications and Contract Documents. After the CONTRACTOR has reviewed and confirmed accuracy and completeness of the “As Built” drawings the CONTRACTOR shall submit the drawings and survey information to the ENGINEER of record.

1. All survey as-built information shall be submitted to the ENGINEER in AutoCAD format.

D. Upon receipt of the “As Built” drawings the ENGINEER shall make all necessary changes to the documents and provide a Record Drawing set to the CONTRACTOR for their use and distribution as required for project closeout, as required by these Specifications and Contract Documents.

1.02 PHOTO DOCUMENTATION

A. Images must be created using only digital photographic equipment. Camera should be capable of utilizing a moderate wide-angle lens system and have electronic flash capable of properly illuminating a large interior space. Digital images shall be saved in JPEG format and properly labeled.

B. Digital copies shall be provided for OWNER and ENGINEER by CONTRACTOR at each weekly progress meeting.

C. Saved images shall include detailed photograph description along with month, day, and year and separated by treatment process.

PART 2 - PRODUCTS (NOT USED)

PART 3 - EXECUTION (NOT USED)

END OF SECTION

SECTION 01 7900 – DEMONSTRATION AND TRAINING

PART 1 - GENERAL

1.01 THE REQUIREMENT

A. Description of Work:

1. The SBR SYSTEM EQUIPMENT VENDOR shall provide formal training of OWNER's personnel. Training shall commence after the successful completion of the Seeding Process
   a. Training of OWNER's personnel shall commence within a period of 14 days after the equipment installation and startup as mutually agreed to by OWNER, ENGINEER, and CONTRACTOR.
   b. Training shall be conducted for first shift during normal working hours.
   c. Training shall be completed within the time allocated in the Agreement.
   d. The Engineer shall document the time when the facilities are substantially unavailable for use by the SBR SYSTEM VENDOR to perform training due to circumstances beyond the control of the SBR SYSTEM VENDOR including but not limited to power outages, lack of feed water, inability to transfer product water or feed water due to factors beyond the control of the SBR SYSTEM VENDOR, not having adequate staff from the CONTRACTOR or the OWNER. If in the sole opinion of the ENGINEER the facilities are substantially unavailable to the SBR SYSTEM VENDOR, equivalent additional time for training will be granted.
   e. Failure of the SBR SYSTEM VENDOR to complete the Training as required by this Section within the allocated time, shall constitute a failure of the SBR SYSTEM VENDOR to provide Special Services in accordance with the requirements of the Contract.
   f. Upon successful completion of the Training required by this Section, the OWNER will issue a "Notice of Completed Training".
   g. The SBR SYSTEM VENDOR shall maintain record of the individuals that have completed training and provide information required for the documentation of Professional Development Hours required for the OWNER's personnel.
2. The SBR SYSTEM VENDOR shall provide the services of factory-trained specialists to train the OWNER's personnel in the recommended operation and the preventive maintenance procedures for all equipment provided by the Contract Documents.
3. The SBR SYSTEM VENDOR shall provide a combination of classroom and hands-on training.
4. The following Levels of Training shall be provided.

Level of Training	Number of Shifts	Maximum Number of Participants	Classroom Training (Hours)	Hands-on Training (Hours)
SBR System	1	4	8	16
Mechanical Equipment	1	4	8	16
Instrumentation and Control Equipment	1	4	8	16
PLC / HMI	1	4	16	16

5. Hands-On Training shall be limited to groups of 4. In the event that more than 4 personnel are to be trained, multiple hands-on training sessions shall be conducted.
6. The SBR SYSTEM VENDOR shall be responsible for all costs associated with training and shall provide required materials, texts, and supplies.
7. Training shall be conducted in normal eight (8) hour working days until conclusion of the training course.
8. Training sessions may be videotaped by the OWNER at the OWNER's expense.
9. Training material shall be provided to the OWNER in written and electronic format.
10. Training shall be performed by the SBR SYSTEM VENDOR and component equipment suppliers. The SBR SYSTEM VENDOR shall be responsible for the training on the design and operation of the equipment and systems provided. This includes, but not limited to:
11. Sequencing Batch Reactor System:
    a. SBR Theory
    b. SBR System
    c. SBR Processes:
        1) Start Up, Shut Down
        2) SBR Treatment Cycle (fill, aerate, anoxic mix, settle, decant)
    d. Routine and Non-Routine Maintenance
12. Component Equipment Training:
    a. Equipment: Equipment (including pumps, compressors, crane)
    b. Mechanical: Equipment (valves, actuators, blowers, and positioners)
13. Instrumentation and Control Programmable Logic Control/HMI Training:
    a. Programmable Logic Control Equipment
    b. HMI System Training

B. Coordination:
1. The SBR SYSTEM VENDOR shall coordinate these services at times acceptable to the OWNER, with a minimum of 5 days' prior notice.

1.02 QUALITY ASSURANCE/QUALITY CONTROL (QA/QC)

A. The qualifications of specialists shall meet the requirements of this Section and are subject to approval by the ENGINEER.

1.03 SUBMITTALS

A. Training Manuals shall be provided with the PRELIMINARY O&M Manuals. Refer to SBR System RFP for Installation, Operation and Maintenance Manuals requirements.

B. The SBR SYSTEM VENDOR shall develop a Training Manual and submit it to the ENGINEER and the OWNER. The Training Manual shall include the elements presented in this Section or as required by the SBR SYSTEM VENDOR or component equipment supplier.

C. The SBR SYSTEM VENDOR shall prepare a Training Lesson Plan, provide qualified instructors, and schedule the training in an organized manner.
1. Proposed lesson plans for scheduled instruction shall be submitted 15 days prior to the commencement of training. Lesson plans shall be approved by the ENGINEER a minimum of 5 days prior to scheduled instruction. All training material shall be provided to the OWNER in electronic format.

2. Credentials for the SBR SYSTEM VENDOR'S designated instructor(s) shall be submitted thirty (30) days prior to the commencement of training. Credentials shall include a brief resume and specific details of the instructor(s) pertaining both to personal experience operating and maintaining the specified equipment and conducting operation and maintenance for the same equipment.
3. The SBR SYSTEM VENDOR'S proposed lesson plans shall detail specific instruction topics. Training aids to be utilized in the instruction shall be referenced and attached where applicable to the proposed lesson plan. "Hands-on" demonstrations planned for the instruction shall be described in the lesson plan.
4. The SBR SYSTEM VENDOR shall indicate the estimated duration of each segment of the training in the lesson plan.
5. Submit information as required by the local primacy agency in support of Professional Development Hours

1.04 SPECIAL PROJECT CONSIDERATIONS

A. Training Aids:
   1. The SBR SYSTEM VENDOR's instructor shall incorporate training aids as appropriate to assist in the instruction. As a minimum, the training aids shall include text and figure handouts. Texts shall be bound within three-ring binders. Other appropriate training aids are:
      a. Audio-visual aids (e.g., films, slides, videotapes, overhead transparencies, posters, blueprints, diagrams, catalogue sheets).
      b. Equipment cutaways and samples (e.g., spare parts and damaged equipment).
      c. Tools (e.g., repair tools, customized tools, measuring and calibrating instruments).

B. The SBR SYSTEM VENDOR's instructor shall utilize descriptive class handouts during the instruction. Photocopied class handouts shall be good quality reproductions. Class handouts should accompany the instruction with frequent reference made to them. Customized handouts developed especially for the instruction are required. Handouts planned for the instruction shall be attached with the manufacturer's proposed lesson plan.

C. Hands-on Demonstration:
   2. The SBR SYSTEM VENDOR's instructor shall present Hands-on demonstrations of operations and maintenance of the SBR SYSTEM VENDOR supplied and component equipment. The proposed Hands-on demonstrations should be described in the SBR SYSTEM VENDOR's proposed lesson plan.

PART 2 – PRODUCTS (NOT USED)

PART 3 – EXECUTION

3.01 OPERATOR TRAINING

A. Training: The instruction lesson plan shall include the following as a minimum:
   1. Equipment Operation:
      a. Describe equipment's operating (process) function. Describe equipment's fundamental operating principals and dynamics.
      b. Identify equipment's mechanical, electrical, and electronic components and features.
      c. Identify all support equipment associated with the operation of subject equipment (e.g., valve actuators, motors).
      d. Recommend standard operating procedures to address start-up, routine monitoring, and shutdown of the equipment.

SECTION 02 0100 – MAINTENANCE OF EXISTING CONDITIONS

PART 1 - GENERAL

1.01 THE REQUIREMENT

A. The WORK of this Section, as defined in the Contract, includes all work necessary to satisfactorily prepare the site as shown on the accepted drawings and as specified herein. Following this preparation, the site shall be in such a condition as to easily continue with the next operation whether it be excavating, backfilling, or any other operations that are a part of the project. Site preparation includes clearing, grubbing, grading, tree and shrub removal, native grass stripping and removing and disposing of all debris within the limits of the project and such other areas as may be indicated on the plans or required work, except such objects as are designated to remain or are to be removed in accordance with the plans. This work shall also include the preservation from injury or defacement of all vegetation and objects designated to remain.

B. Related Sections: The work shall conform to these Specifications and the Contract Documents.

C. Soils Report: This work shall conform to the requirements of the latest Geotechnical Evaluation.

1.02 SUBMITTALS

A. Submittals shall be made in accordance with Section 01 3300 – Submittal Procedures.

B. Shop Drawings: Submit clearing limits, staging, and site access plans and limits.

1.03 SITE SURVEY AND LAYOUT

A. The CONTRACTOR shall establish construction, and clearing limits by providing the initial site survey and field staking. The initial staking will include property line limits, casements and access points and structure locations with 100-ft. offsets. The OWNER shall provide the contractor the survey data for the project to include the survey control points, hubs, etc., and benchmarks for the site. The contractor shall layout required construction staking as defined in these Specifications and the Contract Documents.

1.04 PERMITS

A. Verify all required permits have been secured for this work. Comply with applicable local Air Pollution Control requirements. In the absence of specific ordinances, periodic watering shall be done to control dust throughout the work. Make all necessary arrangements for water required for this work.

PART 2 - PRODUCTS (NOT USED)

PART 3 - EXECUTION

3.01 PRIMARY SITE ACCESS

A. The CONTRACTOR shall provide clearing, grubbing, and stripping as defined in the contract.

B. The CONTRACTOR shall develop any necessary access to the Site, including access entrance barriers to prohibit entry of unauthorized persons as defined in the Contract. The contractor shall provide at the project site access barriers to prohibit entry of unauthorized persons as defined in the Contract.

C. Adequately support existing structures, sidewalks, slabs, pavements, utilities, and other facilities that may be affected by the proposed construction as defined in the Contract.

D. Utility Interference: Where existing utilities interfere with the WORK, notify the utility owner before proceeding in accordance with the General Conditions.

3.02 CLEARING, GRUBBING AND STRIPPING

A. The CONTRACTOR shall perform this work as defined in the Geotechnical Evaluation and or Soils Report.

B. Construction areas shall be cleared of grass and weeds to at least a depth of 1 inch and cleared of structures, pavement, sidewalks, concrete or masonry debris, trees, logs, upturned stumps, loose boulders, and any other objectionable material of any kind which would interfere with the performance or completion of the WORK, create a hazard to safety, or impair the subsequent usefulness of the WORK, or obstruct its operation. Trees and other natural vegetation outside the actual lines of construction shall be protected from damage during construction.

C. Within the limits of clearing, the areas below the natural ground surface shall be grubbed to a depth necessary to remove all stumps, roots, buried logs and all other objectionable material. Septic tanks, drain fields, and connection lines and any other underground structures, debris or waste shall be removed if found on the Site. All objectionable material from the clearing and grubbing process shall be removed from the Site and wasted in approved safe locations.

3.03 OVEREXCAVATION, REGRADING AND BACKFILL UNDER FILL AREAS

A. All grading and excavation shall conform to the requirements of the Geotechnical Evaluation and or Soils Report.

3.04 EXISTING UTILITY SERVICES

A. At start of work, CONTRACTOR shall locate and identify all utility services within the construction limits (both underground and overhead). Utilize Blue Stake services and private location underground utilities locating services as required, including potholing if necessary.

B. CONTRACTOR shall disconnect or reroute all existing services, where such services will be affected by construction operations. Comply with all instructions issued during the pre-construction conference regarding coordination, advance notice, emergency repairs, etc.

C. All DISCONNECTIONS OR TERMINATIONS SHALL BE PERFORMED IN SAFE MANNER, IN ACCORDANCE WITH APPLICABLE CODES AND REGULATIONS. PROVIDE ANY DISCONNECTS SWITCHES, VALVES, PLUGS, TEES, ETC., AS REQUIRED FOR THE VARIOUS LOCATIONS.

END OF SECTION

SECTION 02 4000 – DEMOLITION AND STRUCTURE MOVING

PART 1 - GENERAL

1.01 REQUIREMENT

A. Items required to be removed:
   1. Reference plans for existing items to be removed. Removable items may include, but are not limited to concrete paving, asphaltic concrete pavement, base courses, manholes, and pipes.

1.02 REGULATORY REQUIREMENTS

A. Conform to applicable codes for disposal of debris.

B. Coordinate removal work with utility companies or appropriate party.

PART 2 – PRODUCTS – NOT USED

PART 3 – EXECUTION

3.01 PREPARATION

A. Obtain advance approval from ENGINEER for dimensions and limits of removal work.

B. Identify known utilities below grade. Stake and flag locations.

3.02 PROTECTION

A. Protect following from damage or displacement:
   1. Adjacent public and private property.
   2. Trees, plants, and other landscape features designated to remain.
   3. Utilities designated to remain.
   4. Pavement and utility structures designated to remain.
   5. Bench marks, monuments, and existing structures designated to remain.

3.03 REMOVALS

A. Remove pavements and structures by methods that will not damage underground utilities. Do not use drop hammer near existing underground utilities.

B. Minimize amount of earth loaded during removal operations.

C. Where existing pavement is to remain, make straight saw cuts in existing pavement to provide clean breaks prior to removal. Do not break concrete pavement or base with drop hammer unless concrete or base has been saw cut to minimum depth of 2 inches.

D. When street and driveway saw cut location is greater than one-half of pavement lane width, remove pavement for full lane width or to nearest longitudinal joint as directed by ENGINEER.

E. Remove sidewalks and curbs to nearest existing dummy, expansion, or construction joint.

F. Unless noted otherwise or indicated in the Contract Documents, existing ends of pipe culverts or end of sewers which are to remain, shall have an 8-inch-thick masonry plug in pipe installed in the end of the pipe prior to backfill, with the backfill constructed in accordance with requirements of these Specifications.

3.04 BACKFILL

A. Backfill of removal areas shall be in accordance with requirements of these Specifications.

3.05 DISPOSAL

A. Inlet frames, grates, and plates; and manhole frames and covers, may remain City property. Disposal shall be in accordance with requirements these Specifications.

B. Remove from site, debris resulting from work under this section in accordance with requirements of these Specifications.

END OF SECTION

SECTION 02 9600 – TEMPORARY BYPASS PIPING SYSTEMS

PART 1 – GENERAL

1.01 THE REQUIREMENT

A. Section includes requirements for implementing a temporary bypass piping for the purpose of diverting existing sewage flow around the Work area during construction.

1.02 QUALITY ASSURANCE

A. Follow national standards and as specified herein.

B. Perform leakage and pressure tests on piping using clean water before operation. Notify Project Manager 24 hours prior to testing.

C. Keep and maintain spare parts for piping on site, as required.

1.03 SUBMITTALS

A. Submittals shall be made in accordance with Section 01 33 00 – Submittal Procedures.

1. Detailed plan and description of proposed temporary bypass piping system. Bypass piping plan shall be stamped and certified by an Arizona registered civil engineer. Plans shall indicate the following:

a. Size, material, location, and method of installation of bypass piping;

b. Size and location of manhole for discharge piping;

c. Temporary pipe supports and anchoring required;

d. Thrust and restraint block sizes and locations, if required;

e. Sewer plugging method and type of plugs;

f. Calculations of friction losses, and flow velocity;

g. Schedule of installation and maintenance of bypass piping lines;

h. Procedures to monitor upstream mains for backup impacts;

i. Procedures for installation and removal of piping system;

j. Emergency plan detailing procedures in the event of sewer overflows, service backups, and sewage spillage. A copy of the emergency plan shall be maintained on site for the duration of construction.

1.04 CONTRACTOR'S RESPONSIBILITY FOR OVERFLOWS AND SPILLS

A. It is the responsibility of the Contractor to schedule and perform work in a manner that does not cause overflows, releases, or spills of sewage from sanitary sewers or bypass piping system.

PART 2 – PRODUCTS

2.01 MATERIALS

A. High-Density Polyethylene Pipe (HDPE):

1. All piping shall be homogenous throughout, free of visible cracks, discoloration, pitting, varying wall thickness, holes, foreign material, blisters, or other deleterious faults.

2. Piping shall be assembled and joined at site using couplings, flanges, or butt-fusion method to provide leak proof joints. Follow manufacturer's instructions and ASTM D-2657. Threaded joints or connections are not permitted.

3. Fusing shall be performed by personnel certified as fusion technicians by the manufacturer.
4. Butt-fused joints shall be of true alignment and uniform roll-back beads resulting from use of proper temperature and pressure.
    a. Adequate cooling time shall be allowed before removal of pressure.
    b. Joint shall be watertight and have tensile strength equal to that of the pipe after fusion.
    c. Joint shall be accepted by Project Manager prior to installation.

B. Coupling and connectors shall be:
1. Abrasion resistant;
2. Suitable for intended service;
3. Rated for external and internal loads anticipated.

C. Valves and Fittings shall be selected and sized according to flow calculations and operating pressures.

D. Plugs shall be selected and installed according to size of the service line to be plugged, pipe and manhole configuration, and site-specific requirements. Additional plugs shall be retained on site in the event of plug failure. Plugs shall be inspected for defects before use.

E. Discharge hose shall not be permitted, except in short sections where approved in writing by the Engineer.

F. Anchoring systems shall be provided to ensure pipeline does not sag or deflect.

2.02 DESIGN REQUIREMENT

A. The bypass piping system shall be designed with sufficient capacity to convey the peak flow of 0.27 MGD.

B. The system shall be designed to operate for 24 hours a day.

C. Pipeline valves, fittings, and connections shall be of adequate size to accommodate peak flow and shall ensure total flow can be safely diverted around construction areas.

PART 3– EXECUTION

3.01 PREPARATION

A. Bypass pipelines shall be located such that there is minimal disturbance to existing utilities. Existing utilities shall be field located by the Contractor in accordance with the contract documents. Bypass pipeline locations shall be approved by the Engineer upon submittal of the temporary bypass system design plans as specified above in Part 1.

3.02 INSTALLATION AND REMOVAL

A. Bypass piping system shall be connected to the existing sewer system(s) where indicated on the Drawings.

B. Plugging or blocking of sewage flows shall incorporate a primary and secondary plugging device. When plugging or blocking is no longer required for performance and acceptance of work, remove in such a manner that permits sewage flow to slowly return to normal without surge. Surcharging or other major downstream disturbances shall be avoided.

END OF SECTION

2. Detailed Component Description:
   a. Identify and describe in detail each component's function.
   b. Group related components into subsystems, where applicable. Describe subsystem functions and their interaction with other subsystems.
   c. Identify and describe in detail equipment safeties and control interlocks.
3. Equipment Preventative Maintenance (PM):
   a. Describe PM inspection procedures required to:
      1) Perform an inspection of the equipment in operation.
      2) Spot potential trouble symptoms and anticipate breakdowns.
      3) Forecast maintenance requirements (predictive maintenance).
   b. Define the recommended PM intervals for each component.
   c. Provide lubricant and replacement part recommendations and limitations.
   d. Describe appropriate cleaning practices and recommend intervals.
   e. Identify and describe the use of special tools required for maintenance of the equipment.
   f. Describe component removal/installation and disassembly/assembly procedures.
   g. Perform "hands-on" demonstrations of preventive maintenance procedures.
   h. Describe recommended measuring instruments and procedures, and provide instruction on interpreting alignment measurements, as appropriate. Define recommended torque, mounting, calibration, and/or alignment procedures and settings, as appropriate.
   i. Describe recommended procedures to check/test equipment following a corrective repair.
4. Equipment Troubleshooting:
   a. Define recommended systematic troubleshooting procedures.
   b. Provide component specific troubleshooting checklists.
   c. Describe applicable equipment testing and diagnostic procedures to facilitate troubleshooting.

END OF SECTION

SECTION 03 15 00 - CONCRETE ACCESSORIES

PART 1 - GENERAL

1.01 SECTION INCLUDES

A. Provision of waterstops embedded in concrete and spanning control, expansion, and/or construction joints to create a continuous diaphragm to prevent fluid migration.

B. Provision of strip applied expanding waterstop, embedded in concrete and spanning pipe penetrations, to create a continuous diaphragm for prevention of fluid migration.

1.02 REFERENCES

A. PVC Waterstop:
   1. Corps of Engineers: CRD-C 572-74
   2. American Society for Testing Materials (ASTM)
   3. Bureau of Reclamation: C-902

B. Hydrophilic Waterstop: American Society for Testing Materials (ASTM)

C. Related Sections: Work shall conform to the applicable Sections of Division 03 – Concrete.

1.03 SUBMITTALS

A. Submittals shall be furnished in accordance with Section 01 33 00 – Submittal Procedures.

B. Product Data:
   1. Polyvinyl chloride waterstop: data of complete physical properties.
   2. Stripped applied waterstop: data of complete physical properties.

C. Samples:
   1. Polyvinyl chloride waterstop.
   2. Strip applied waterstop.

1.04 DELIVERY, STORAGE, AND HANDLING

A. PVC waterstops, Store waterstops under tarps to protect from oil, dirt, sunlight, and premature exposure to water.

B. Strip applied waterstop:
   1. Protect waterstops from exposure to moisture that may cause premature waterstop expansion.
   2. Store waterstops under cover to protect from oil, dirt, and sunlight.

PART 2 - PRODUCTS

2.01 PVC WATERSTOPS FOR JOINTS

A. Provide flexible PVC (polyvinyl chloride) waterstop as manufactured by Greenstreak, profile style number. Ribbed with Centerbulb. Model No 735,718,696 or ENGINEER-approved equal.

B. The PVC waterstop shall be extruded from an elastomeric plastic material of which the basic resin is prime virgin polyvinyl chloride. The PVC compound shall not contain any scrapped or reclaimed material or pigment whatsoever.

C. Performance Requirements as Follows:

Property	Test Method	Required Limits
Water Absorption	ASTM D570	0.15% max
Tear Resistance	ASTM D624	200 lb/in (35kN/m) min
Ultimate Elongation	ASTM D638	350% min
Tensile Strength	ASTM D638	200 psi (13.78 Mpa) min
Low Temperature Brittleness	ASTM D746	No Failure @ -35o F (-37o C)
Stiffness in Flexure	ASTM D747	600 psi (4.13 Mpa) min
Specific Gravity	ASTM D792	1.45 max
Hardness, Shore A	ASTM D2240	79 +/- 3
Tensile Strenth After Accelerated Extraction	CRD-C 572	1850 psi (11.03 Mpa) min
Elongation After Accelerated Extraction	CRD-C 572	300% min
Effect of Alkalies after 7 days: Weight Change	CRD-C 572	b/t -0.10% and +0.25%
Hardness Change		+/- 5 points

2.02 STRIP APPLIED WATERSTOP FOR CONCRETE CAST AGAINST EXISTING CONCRETE STRUCTURES

A. Provide strip applied expanding waterstop comprised of modified chloroprene rubber. Product shall be “HYDROTITE”, as supplied by Greenstreak, Inc. 3400 Tree Court Industrial Blvd., St. Louis, MO 63122, Phone: 800-325-9400, Fax: 800-551-5145. Or ENGINEER-approved equal.

B. The waterstop shall be a combination of chloroprene rubber and chloroprene rubber modified to impart hydrophilic properties.

C. The waterstop shall have a delay coating to inhibit initial expansion due to moisture present in fresh concrete.

D. Performance Requirements as follows:

1. Chloroprene Rubber:

Property	Test Method	Required Limits
Tensile Strength	ASTM D412	1300 PSI min
Ultimate Elongation	ASTM D412	400% min
Hardness (Shore A)	ASTM D2240	50 +/- 5
Tear Resistance	ASTM D624	100 lb/in min

2. Modified Chloroprene (Hydrophilic) Rubber:

Property	Test Method	Required Limits
Tensile Strength	ASTM D412	350 PSI min
Ultimate Elongation	ASTM D412	600% min
Hardness (Shore A)	ASTM D2240	52 +/- 5
Tear Resistance	ASTM D624	50 lb/in
Expansion Ration	Volumetric Change-Distilled Water @ 70°F	3 to 1 min

2.03 ACCESSORIES

A. PVC Waterstops:

1. Provide factory made waterstop fabrications for all changes of direction, intersections, and transitions leaving only straight butt joint splices for the field.
2. Provide hog rings or grommets spaced at 12 inches on center along length of waterstop.

3. Provide Teflon coated thermostatically controlled waterstop splicing irons for field butt splices.

B. Strip Applied Waterstops:
   1. Provide SWELLSTOP Primer Adhesive to continuously secure SWELLSTOP to concrete or ENGINEER-approved equal.
   2. Provide concrete nails as required to secure SWELLSTOP and HYDROTITE in vertical or overhead applications or ENGINEER-approved equal.
   3. On rough concrete surfaces apply LEAKMASTER to smooth surfaces and adhere to HYDROTITE.

PART 3 - EXECUTION

3.01 INSTALLATION

A. PVC Waterstop:
   1. Refer to manufacturer installation recommendations.
   2. Field butt splices shall be heat fused welded using a Teflon-covered thermostatically-controlled waterstop splicing iron at approximately 380°F. Follow approved manufacturer recommendations.
   3. Lapping of waterstop, use of adhesives, or solvents shall not be allowed.
   4. Center waterstop in joint and secure waterstop in correct position using hog rings or grommets spaced at 12” on centers along the length of the waterstop and wire tie to adjacent reinforcing steel.

B. Strip Applied Waterstop:
   1. Refer to manufacturer installation recommendations.
   2. Apply primer/adhesive to dry pipe or pipe sleeve surface, 2 inches wide continuously along the joint, maintaining a minimum of 2 inches clear cover to concrete face.
   3. Primer adhesive shall be allowed to “dry to the touch” (typically 30 minutes to several hours; dependent on-site conditions) prior to application of waterstop.
   4. Continuously adhere waterstop to pipe or pipe sleeve utilizing primer adhesive and maintaining a minimum of 2 inches clear cover to concrete face.
   5. Apply waterstop the same day as primer adhesive.
   6. Waterstop shall be butt spliced pressing ends together ensuring no separation or air pockets
   7. Protect waterstop from moisture, dirt, oil, and sunlight during the progress of the work
   8. Remove release paper from waterstop immediately prior to concrete placement.
   9. Inspect waterstop for premature swelling, discontinuity, and debris contamination prior to concrete pour. Replace unacceptable waterstop.
   10. Place and thoroughly vibrate concrete, taking care not to disturb or displace the waterstop. Do not allow vibrator to contact the waterstop.

END OF SECTION

SECTION 03 1516 – CONCRETE CONSTRUCTION JOINTS

PART 1 - GENERAL

1.01 THE REQUIREMENT

A. Construct all joints in concrete at the locations shown. Joints required in concrete structures are of various types and will be permitted only where shown, unless specifically accepted by the ENGINEER.

A. Commercial Standards (ASTM):

C920	Elastomeric Joint Sealants
D412	Rubber Properties in Tension
D624	Rubber Property - Tear Resistance
D638	Tensile Properties of Plastics
D746	Brittleness Temperature of Plastics and Elastomers by Impact
D747	Apparent Bending Modulus of Plastics by Means of a Cantilever Beam
D1056	Flexible Cellular Materials - Sponge or Expanded Rubber
D1752	Preformed Sponge Rubber and Cork Expansion Joint Fillers for Concrete Paving and Structural Construction
D2240	Rubber Property - Durometer Hardness
D2241	Poly (Vinyl Chloride) (PVC) Pressure-Rated Pipe (SDR-Series)

1.02 TYPES OF JOINTS

A. Construction Joints: Provide where shown on the plans. When fresh concrete is placed against a hardened concrete surface, the joint between the two (2) pours is called a construction joint. Unless otherwise specified, all joints in water bearing members shall be provided with a waterstop and sealant groove of the shape specified and shown. The space so formed shall be filled with a joint sealant material as specified in these Specifications.

B. Contraction Joints: Provide where shown on the plans. Contraction joints are similar to construction joints except that the fresh concrete shall not bond to the hardened surface of the first pour, which shall be coated with a bond breaker. The slab reinforcement shall be stopped 4½ inches from the joint; which is provided with a sleeve-type dowel, to allow shrinkage of the concrete of the second pour. Waterstop and/or sealant groove shall also be provided when specified or shown.

C. Expansion Joints: Provide where shown on the plans. To allow the concrete to expand freely, a space is provided between the two pours, the joint shall be formed as shown. This space is obtained by placing a filler joint material against the first pour, which acts as a form for the second pour. Unless otherwise specified, all expansion joints in water bearing members shall be provided with a waterstop as shown.

D. The space so formed shall be filled with a joint sealant material as specified in these Specifications. In order to keep the two (2) walls or slab elements in line the joint shall also be provided with a sleeve-type dowel as shown.

E. Control Joints: The function of the control joint is to provide a weaker plane in the concrete, where shrinkage cracks will probably occur. A groove, of the shape and dimensions shown, is formed or saw-cut in the concrete. This groove is afterward filled with a joint sealant material as specified in these Specifications.

1.03 SUBMITTALS

A. Submittals shall be furnished in accordance with Section 01 3300 – Submittal Procedures.

B. Waterstops: Prior to production of the material required under this contract, qualification samples shall be submitted. Such samples shall consist of extruded or molded sections of each size or shape to be used, and shall be accomplished so that the material and workmanship represents in all respects the material to be furnished under this contract. The balance of the material to be used under this contract shall not be produced until after the ENGINEER has reviewed the qualification samples as defined in these Specifications.

C. Joint Location: Submit placement shop drawings showing the location and type of all joints for each structure, along with the associated pour sequence.

1.04 QUALITY ASSURANCE

A. Waterstop Inspection: It is required that all waterstop field joints shall be subject to rigid inspection, and no such work shall be scheduled or started without having made prior arrangements with the ENGINEER to provide for the required inspections. Not less than 24-hour notice shall be provided to the ENGINEER for scheduling such inspections.

B. All field joints in waterstops shall be subject to rigid inspection for misalignment, bubbles, inadequate bond, porosity, cracks, offsets, and other defects, which would reduce the potential resistance of the material to water pressure at any point. All defective joints shall be replaced with material, which shall pass said inspection, and all faulty material shall be removed from the site and disposed of at no additional cost.

C. The following waterstop defects represent a partial list of defects, which shall be grounds for rejection:
   1. Offsets at joints greater than 1/16-inch or 15% of material thickness, at any point, whichever is less.
   2. Exterior crack at joint, due to incomplete bond, which is deeper than 1/16-inch or 15% of material thickness, at any point, whichever is less.
   3. Any combination of offset or exterior crack which will result in a net reduction in the cross section of the waterstop in excess of 1/16-inch or 15% of material thickness at any point, whichever is less.
   4. Misalignment of joint, which result in misalignment of the waterstop in excess of ½-inch in 10 feet.
   5. Porosity in the welded joint as evidenced by visual inspection.
   6. Bubbles or inadequate bonding which can be detected with a penknife test. (If, while prodding the entire joint with the point of a pen knife, the knife breaks through the outer portion of the weld into a bubble, the joint shall be considered defective.)

D. Waterstop Samples: Prior to use of the waterstop material in the field, a sample of each size or shape of material to be used shall be submitted to the ENGINEER for review. These samples shall be fabricated so that the material and workmanship represent in all respects the fittings to be furnished under this contract. Field samples of fabricated fittings (crosses, tees, etc.) may be selected at random by the ENGINEER for testing by a laboratory at no additional expense to the ENGINEER. When tested, they shall have a tensile strength across the joints equal to at least 600 psi.

E. Construction Joint Sealant: As per these Specifications.

PART 2 - PRODUCTS

2.01 PVC AND HYDROPHILIC WATERSTOP

A. General: As defined in these Specifications.

2.02 BACKING ROD

A. Backing rod shall be an extruded closed-cell, polyethylene foam rod. The material shall be compatible with the joint sealant material used and shall have a tensile strength of not

less than 40 psi and a compression deflection of approximately 25% at 8 psi. The rod shall be 1/8-inch larger in diameter than the joint width except that a 1-inch diameter rod shall be used for a ¾-inch wide joint.

2.03 BOND BREAKER

A. Bond breaker shall be Super Bond Breaker as manufactured by Burke Company, San Mateo, California; Select Cure CRB as manufactured by Select Products Co., Upland, California; or ENGINEER-approved equal. It shall contain a fugitive dye so that areas of application will be readily distinguishable. Provide where shown on the plans.

2.04 SLIP DOWELS

A. Slip dowels in joints shall be A36 smooth epoxy-coated bars, conforming to ASTM A775. Provide where shown on the plans.

PART 3 - EXECUTION

3.01 GENERAL

A. Waterstops of the type specified herein shall be embedded in the concrete across joints as shown. All waterstops shall be fully continuous for the extent of the joint. Splices necessary to provide such continuity shall be accomplished in conformance to printed instructions of manufacturer of the waterstops. Suitable precautions and means to support and protect the waterstops during the progress of the work and shall repair or replace at its own expense any waterstops damaged during the progress of the work shall be taken. All waterstops shall be stored so as to permit free circulation of air around the waterstop material.

B. When any waterstop is installed in the concrete on one side of a joint, while the other half or portion of the waterstop remains exposed to the atmosphere for more than 2 days, suitable precautions shall be taken to shade and protect the exposed waterstop from direct rays of the sun during the entire exposure and until the exposed portion of the waterstop is embedded in concrete.

3.02 SPLICES IN WATERSTOPS

A. When applicable, splices in waterstops shall be performed by heat-sealing the adjacent waterstop sections in accordance with the manufacturer's printed recommendations. It is essential that:
   1. The material not be damaged by heat sealing.
   2. The splices have a tensile strength of not less than 60 percent of the unspliced materials tensile strength.
   3. The continuity of the waterstop ribs and of its tubular center axis be maintained.

B. Butt joints of the ends of two (2) identical waterstop sections may be made while the material is in the forms.

C. All joints with waterstops involving more than two (2) ends to be jointed together, and all joints which involve an angle cut, alignment change, or the joining of two (2) dissimilar waterstop strips of waterstop material beyond the joint. Upon being inspected and approved, such prefabricated waterstop joint assemblies shall installed in the forms and the ends of the 24-inch sections shall be prefabricated prior to placement in the forms, allowing not less than 24-inch-long strips shall be butt welded to the straight run portions of waterstop in place in the forms.

D. Where a centerbulb waterstop intersects and is jointed with a non-centerbulb waterstop, care shall be taken to seal the end of the centerbulb, using additional PVC material if needed.

3.03 JOINT CONSTRUCTION

A. Setting Waterstops: In order to eliminate faulty installation that may result in joint leakage, particular care shall be taken of the correct positioning of the waterstops during installation. Adequate provisions must be made to support and anchor the waterstops during progress and to insure the proper placement and or embedment in the concrete. The symmetrical halves of the waterstops shall be equally divided between the concrete pours at the joints. The center axis of the waterstops shall be coincident with the joint openings. Maximum density and imperviousness of the concrete shall be insured by thoroughly working it near all joints.

B. In placing flat-strip hydrotite waterstops in the forms, means shall be provided to prevent them from being folded over by the concrete as it is placed. Unless otherwise shown, all hydrotite waterstops shall be held in place with light wire ties on 12-inch centers, which shall be passed through the edge of the hydrotite waterstop and tied to the curtain of reinforcing steel. Horizontal hydrotite waterstops, with their flat face in a vertical plane, shall be held in place with continuous supports to which the top edge of the hydrotite waterstop shall be tacked. In placing concrete around horizontal hydrotite waterstops, with their flat face in a horizontal plane, concrete shall be worked under the hydrotite waterstops by hand so, as to avoid the formation of air and rock pockets.

C. In placing centerbulb waterstops in expansion joints, the centerbulb shall be centered on the joint filler material.

D. Waterstop in vertical wall joints shall stop 6 inches from the top of the wall where such waterstop does not connect with any other waterstop and is not to be connected to for a future concrete placement.

E. Joint Location: Construction joints, and other types of joints, shall be provided where shown. When not shown, construction joints shall be provided at 25-foot maximum spacing for all concrete construction, unless noted otherwise. Where joints are shown spaced greater than 40-feet apart, additional joints shall be provided to maintain the 25-foot maximum spacing. The location of all joints, of any type, shall be submitted for acceptance by the ENGINEER.

F. Joint Preparation: Special care shall be used in preparing concrete surfaces at joints where bonding between two (2) sections of concrete is required. Unless otherwise shown, such bonding will be required at all horizontal joints in walls. Surfaces shall be prepared in accordance with the requirements of the applicable Sections of Division 03 – Concrete. Except on horizontal wall construction joints, wall to slab joints or where otherwise shown or specified, at all joints where waterstops are required, the joint face of the first pour shall be coated with a bond breaker as shown on the plans.

G. Construction Joint Sealant: Construction joints in water-bearing floor slabs, and elsewhere as shown, shall be provided with tapered grooves, which shall be filled with a construction joint sealant. The material used for forming the tapered grooves shall be left in the grooves until just before the grooves are cleaned and filled with joint sealant. After removing the forms from the grooves, all laitance and fins shall be removed, and the grooves shall be sandblasted. The grooves shall be allowed to become thoroughly dry, after which they shall be blown out; immediately thereafter, install the joint sealant per these Specifications, they shall be primed, bond breaker tape placed in the bottom of the groove, and filled with the construction joint sealant. The primer used shall be supplied by the same manufacturer supplying the sealant. No sealant will be permitted to be used without a primer. Care shall be used to completely fill the sealant grooves. Areas designated to receive a sealant fillet shall be thoroughly cleaned, as outlined for the tapered grooves, prior to application of the sealant.

END OF SECTION

SECTION 03 2000 – CONCRETE REINFORCING

PART 1 - GENERAL

1.01 THE REQUIREMENT

A. Furnish, fabricate, and place all concrete reinforcement steel, welded wire fabric, couplers, and concrete inserts for use in reinforced concrete construction and perform all appurtenant work, including installation of all the wires, clips, supports, chairs, spacers, and other accessories, all in accordance with the Contract Documents.

B. American Iron and Steel (AIS) requirement applies to this section. All iron and steel products used in this project must be produced in the United States.

1.02 REFERENCE SPECIFICATIONS, CODES AND STANDARDS

A. Codes: Codes: All codes, as referenced herein are specified in applicable Sections of Division 01 – General Requirements.

B. Commercial Standards:

ACI 315	Details and Detailing of Concrete Reinforcement
ACI 318	Building Code Requirements for Reinforced Concrete
CRSI MSP-1	Concrete Reinforcing Steel Institute Manual of Standard Practice
AWS D1.4	Structural Welding Code - Reinforcing Steel
ASTM A82	Steel Wire, Plain, for Concrete Reinforcement
ASTM A615	Deformed and Plain Billet-Steel Bars for Concrete Reinforcement
ASTM A775	Epoxy-Coated Reinforcing Steel Bars

1.03 SUBMITTALS

A. Submittals shall be furnished in accordance with Section 01 3300 – Submittal Procedures.

B. Submittals shall include shop bending diagrams, placing lists, drawings of all reinforcement steel prior to fabrication and mill test reports.

C. Details of the concrete reinforcement steel and concrete inserts shall be submitted at the earliest possible date after receipt by the CONTRACTOR of the Notice to Proceed. Said details of reinforcement steel for fabrication and erection shall conform to ACI 315 and the requirements specified and shown. The shop bending diagrams shall show the actual lengths of bars, to the nearest inch measured to the intersection of the extensions (tangents for bars of circular cross-section) of the outside surface. The shop drawings shall include bar placement diagrams, which clearly indicate the dimensions of each bar splice.

D. Where mechanical couplers are required or permitted to be used to splice reinforcement steel, submit manufacturer's literature which contains instructions and recommendations for installation for each type of coupler used; certified test reports which verify the load capacity of each type and size of coupler used; and shop drawings which show the location of each coupler with details of how they are to be installed in the formwork.

E. If reinforcement steel is spliced by welding at any location, submit mill test reports, which shall contain the information necessary for the determination of the carbon equivalent as specified in AWS D1.4. Submit a written welding procedure for each type of weld for each size of bar which is to be spliced by welding; merely a statement that AWS procedures will be followed is not acceptable.

F. Submit all reinforcing product mill certificates.

1.04 QUALITY ASSURANCE

A. If requested by the ENGINEER, the CONTRACTOR shall provide samples from each heat of reinforcement steel delivered in a quantity adequate for testing. Costs of all tests will be paid by the CONTRACTOR.

B. If reinforcement steel is spliced by welding at any location, the CONTRACTOR shall submit certifications of procedure qualifications for each welding procedure used and certification of welder qualifications, for each welding procedure, and for each welder performing the work. Such qualifications shall be as specified in AWS D1.4.

C. If requested by the ENGINEER, the CONTRACTOR shall provide samples of each type of welded splice used in the WORK in a quantity and of dimensions adequate for testing. At the discretion of the ENGINEER, radiographic testing of direct butt-welded splices will be performed. The CONTRACTOR shall assist as necessary to facilitate testing. The CONTRACTOR shall repair any weld, which fails to meet the requirements of AWS D1.4. The costs of testing will be paid by the CONTRACTOR.

PART 2 - PRODUCTS

2.01 REINFORCEMENT STEEL

A. Reinforcement Steel for all cast-in-place reinforced concrete construction shall conform to the following requirements:
   1. Bar reinforcement shall conform to the requirements of ASTM A615 for Grade 60 Billet Steel Reinforcement or as otherwise shown.
   2. Welded wire fabric reinforcement shall conform to the requirements of ASTM A185 and the details shown; provided, that welded wire fabric with longitudinal wire of W4 size wire and smaller shall be either furnished in flat sheets or in rolls with a core diameter of not less than 10 inches; and provided further, that welded wire fabric with longitudinal wires larger than W4 size shall be furnished in flat sheets only.
   3. Spiral reinforcement shall be cold-drawn steel wire conforming to the requirements of ASTM A82.

B. Accessories:
   1. Accessories shall include all necessary chairs, slab bolsters, concrete blocks, tie wires, dips, supports, spacers, and other devices to position reinforcement during concrete placement. All bar supports shall meet the requirements of the CRSI Manual of Standard Practice including special requirements for supporting epoxy coated reinforcing bars. Wire bar supports shall be CRSI Class 1 for maximum protection with a 1/8-inch minimum thickness of plastic coating, which extends at least ½-inch from the concrete surface. Plastic shall be gray in color.
   2. Concrete blocks (dobies), used to support and position reinforcement steel, shall have the same or higher compressive strength as specified for the concrete in which it is located. Wire ties shall be embedded in concrete block bar supports.

C. Epoxy coating for reinforcing and accessories, where specified or shown, shall conform to ASTM A775.

2.02 MECHANICAL COUPLERS

A. Mechanical couplers shall be provided where shown and where approved by the ENGINEER. The couplers shall develop a tensile strength, which exceeds 125% of the yield strength of the reinforcement bars being spliced at each splice.

B. Where the type of coupler used is composed of more than one component, all components required for a complete splice shall be supplied. This shall apply to all mechanical splices, including those splices intended for future connections.

C. The reinforcement steel and coupler used shall be compatible for obtaining the required strength of the connection. Straight threaded type couplers shall require the use of the next larger size reinforcing bar or shall be used with reinforcing bars with specially forged ends which provide upset threads which do not decrease the basic cross section of the bar.

D. Couplers shall be Lenton Form Saver as manufactured by Erico Products; Dowel Bar Splicer System as manufactured by Richmond Screw Anchor Company; or ENGINEER-approved equal.

2.03 WELDED SPLICES

A. Welded splices shall be provided where shown and where approved by the ENGINEER. All welded splices of reinforcement steel shall develop a tensile strength, which exceeds 125% of the yield strength of the reinforcement bars, which are connected.

B. All materials required to conform the welded splices to the requirements of AWS D1.4 shall be provided.

2.04 EPOXY GROUT

A. Epoxy for grouting reinforcing bars shall be specifically formulated for such application, for the moisture condition, application temperature and orientation of the hole to be filled. Epoxy grout shall meet the requirements of these Specifications.

PART 3 - EXECUTION

3.01 GENERAL

A. All reinforcement steel, welded wire fabric, couplers and other appurtenances shall be fabricated, and placed in accordance with the requirements of the Building Code and the Supplementary Requirements specified herein.

3.02 FABRICATION

A. General:
   1. Reinforcement steel shall be accurately formed to the dimensions and shapes shown, and the fabricating details shall be prepared in accordance with ACI 315 and ACI 318, except as modified by the Contract Drawings. Stirrups and tie bars shall be bent around a pin having a diameter not less than 1½-inch for No. 3 bars, 2-inch for No. 4 bars, and 2½-inch for No. 5 bars. Bends for other bars shall be made around a pin having a diameter not less than 6 times the bar diameter, except for bars larger than 1-inch, in which case the bends shall be made around a pin of 8 bar diameters. Bars shall be bent cold.
   2. The CONTRACTOR shall fabricate reinforcement bars for structures in accordance with bending diagrams, placing lists, and placing drawings. Said drawings, diagrams and lists shall be prepared by the CONTRACTOR as specified under Section 01 3300 – Submittal Procedures.

B. Fabricating Tolerances: Bars used for concrete reinforcement shall meet the following requirements for fabricating tolerances:
   1. Sheared length: +/- 1-inch
   2. Depth of truss bars: + 0, - ½-inch
   3. Stirrups, ties, and spirals: +/- ½-inch
   4. All other bends: +/- 1-inch

3.03 PLACING

A. Reinforcement steel shall be accurately positioned as shown, and shall be supported and wired together to prevent displacement, using annealed iron wire ties or suitable clips at intersections. All reinforcement steel shall be supported by concrete, plastic or metal supports, spacers or metal hangers, which are strong and rigid enough to prevent any displacement of the reinforcement steel. Where concrete is to be placed on the ground, supporting concrete blocks (or dobies) shall be used, in sufficient numbers to support the bars without settlement, but in no case shall such support be continuous. All concrete blocks used to support, reinforcement steel shall be tied to the steel with wire ties, which are embedded in the blocks. For concrete over formwork, the CONTRACTOR shall furnish concrete, metal, plastic or other acceptable bar chairs and spacers.

B. Limitations on the use of bar support materials shall be as follows:
   1. Concrete Dobies: Permitted at all locations except where architectural finish is required.
   2. Wire Bar Supports: Permitted only at slabs over dry areas, interior dry wall surfaces and exterior wall surfaces.
   3. Plastic Bar Supports: Permitted at all locations except on grade.

C. Tie wires shall be bent away from the forms in order to provide the specified concrete coverage.

D. Bars additional to those shown which may be found necessary or desirable by the ENGINEER for the purpose of securing reinforcement in position shall be provided by the CONTRACTOR at its own expense.

E. Unless otherwise specified, reinforcement placing tolerances shall be within the limits specified in Section 7.5 of ACI 318 except where in conflict with the requirements of the Building Code.

F. Bars may be moved as necessary to avoid interference with other reinforcement steel, conduits, or embedded items. If bars are moved more than one bar diameter, or enough to exceed the above tolerances, the resulting arrangement of bars shall be as acceptable to the ENGINEER.

G. Accessories supporting reinforcing bars shall be spaced such that there is no deflection of the accessory from the weight of the supported bars. When used to space the reinforcing bars from wall forms, the forms and bars shall be located so that there is no deflection of the accessory when the forms are tightened into position.

3.04 SPACING OF BARS

A. The clear distance between parallel bars (except in columns and between multiple layers of bars in beams) shall be not less than the nominal diameter of the bars nor less than 1-1/3 times the maximum size of the coarse aggregate, nor less than 1-inch.

B. Where reinforcement in beams or girders is placed in two (2) or more layers, the clear distance between layers shall be not less than one inch.

C. In columns, the clear distance between longitudinal bars shall be not less than 1½ times the bar diameter, nor less than 1½ times the maximum size of the coarse aggregate, nor less than 1½ inches.

D. The clear distance between bars shall also apply to the distance between a contact splice and adjacent splices or bars.

3.05 SPLICING

A. General:
   1. Reinforcement bar splices shall only be used at locations shown. When it is necessary to splice reinforcement at points other than where shown, the character of the splice shall be as acceptable to the ENGINEER.
   2. Unless, otherwise indicated, dowels shall match the size and spacing of the spliced bar.

B. Splices of Reinforcement:
   1. The length of lap for reinforcement bars, unless otherwise shown shall be in accordance with ACI 318-89, Section 12.15.1 for a Class B splice.
   2. Splices in column spiral reinforcement, when necessary, shall be made by welding or by a lap of 1½ turns.

C. Bending or Straightening: Reinforcement shall not be straightened or re-bent in a manner, which will injure the material. Bars with kinks or bends not shown shall not be used. All bars shall be bent cold, unless otherwise permitted by the ENGINEER. No bars partially embedded in concrete shall be field-bent except as shown or specifically permitted by the ENGINEER.

D. Couplers, which are located at a joint face, shall be a type, which can be set either flush or recessed from the face. The couplers shall be sealed during concrete placement to completely eliminate concrete or cement paste from entering. Couplers intended for future connections shall be recessed a minimum of ½-inch from the concrete surface. After the concrete is placed, the coupler shall be plugged with plastic plugs, which have an O-ring seal and the recess filled with sealant to prevent any contact with water or other corrosive materials. Threaded couplers shall be plugged.

E. Unless noted otherwise, mechanical coupler spacing and capacity shall match the spacing and capacity of the reinforcing shown for the adjacent section.

3.06 CLEANING AND PROTECTION

A. Reinforcement steel shall at all times be protected from conditions conducive to corrosion until concrete is placed around it.

B. The surfaces of all reinforcement steel and other metalwork to be in contact with concrete shall be thoroughly cleaned of all dirt, grease, loose scale and rust, grout, mortar, and other foreign substances immediately before the concrete is placed. Where there is delay in depositing concrete, reinforcement shall be reinserted and, if necessary recleaned.

3.07 EMBEDMENT OF DRILLED REINFORCING STEEL DOWELS

A. Hole Preparation:
   1. The hole diameter shall be as recommended by the epoxy manufacturer but shall be no larger than 0.25-inch greater than the diameter of the outer surface of the reinforcing bar deformations.
   2. The depth of the hole shall be as recommended by the epoxy manufacturer to fully develop the bar but shall not be less than 12 bar diameters, unless noted otherwise.
   3. The hole shall be drilled by methods, which do not interfere with the proper bonding of epoxy.
   4. Existing reinforcing steel in the vicinity, of proposed holes shall be located prior to drilling. The location of holes to be drilled shall be adjusted to avoid drilling through or nicking any existing reinforcing bars.
   5. The hole shall be blown clean with clean, dry compressed air to remove all dust and loose particles.

6. Epoxy shall be injected into the hole through a tube placed to the bottom of the hole. The tube shall be withdrawn as epoxy is placed but kept immersed to prevent formation of air pockets. The hole shall be filled to a depth that insures that excess material will be expelled from the hole during dowel placement.
7. Dowels shall be twisted during insertion into the partially filled hole so as to guarantee full wetting of the bar surface with epoxy. The bar shall be inserted slowly enough to avoid developing air pockets.

END OF SECTION

SECTION 03 30 00 – CAST-IN-PLACE CONCRETE

PART 1 - GENERAL

1.01 THE REQUIREMENT

A. Furnish all materials for concrete in accordance with the provisions of this Section and form, mix, place, cure, repair, finish, and do all other work as required to produce finished concrete, in accordance with the requirements of the Contract Documents.

B. Soils Report: This work shall conform to the requirements of the latest Geotechnical Evaluation and or Soils Report.

C. The following types of concrete are covered in this Section:
   1. Structural Concrete: Concrete to be used in all cases except where indicated otherwise in the Contract Documents.
   2. Sitework Concrete: Concrete to be used for curbs, gutters, catch basins, sidewalks, pavements, fence and guard post embedment, underground duct bank encasement and all other concrete appurtenant to electrical facilities unless otherwise indicated.
   3. Lean Concrete: Concrete to be used for thrust blocks, pipe trench cut-off blocks and cradles that are detailed on the Drawings as un-reinforced. Lean concrete shall be used as protective cover for dowels intended for future connection.

D. The term "hydraulic structure" used in these specifications means environmental engineering concrete structures for the containment, treatment or transmission of water, wastewater, or other fluids.

E. American Iron and Steel (AIS) requirement applies to this section. All iron and steel products used in this project must be produced in the United States.

1.02 REFERENCE SPECIFICATIONS, CODES AND STANDARDS

A. The work shall conform to the requirements of the applicable Sections of these Specifications Divisions:
   1. 01 – General Requirements
   2. 03 – Concrete

B. Commercial Standards:
   ACI 117 - Concrete Construction and Materials
   ACI 214 - Evaluation of Strength Test Results of Concrete
   ACI 301 - Structural Concrete for Buildings
   ACI 306.1 - Cold Weather Concreting
   ACI 309 - Consolidation of Concrete
   ACI 315 - Details and Detailing of Concrete Reinforcement
   ACI 318 - Building Code Requirements for Reinforced Concrete
   ACI 350R - Environmental Engineering Concrete Structures
   ASTM C31 - Making and Curing Concrete Test Specimens in the Field
   ASTM C33 - Concrete Aggregates
   ASTM C39 - Compressive Strength of Cylindrical Concrete Specimens
   ASTM C94 - Ready-Mixed Concrete
   ASTM C136 - Sieve Analysis of Fine and Coarse Aggregates
   ASTM C143 - for Slump of Hydraulic Cement Concrete
   ASTM C150 - Portland Cement
   ASTM C156 - Water Retention by Concrete Curing Materials
   ASTM C157 - Length Change of Hardened Hydraulic Cement Mortar and Concrete

ASTM C192 - Making and Curing Concrete Test Specimens in the Laboratory
ASTM C260 - Air-Entraining Admixtures for Concrete
ASTM C309 - Liquid Membrane-Forming Compounds for Curing Concrete
ASTM C494 - Chemical Admixtures for Concrete
ASTM C1077 - Laboratories Testing Concrete and Concrete Aggregates for use in Construction & Criteria for Laboratory Evaluation
ASTM D175 - Preformed Expansion Joint Fillers for Concrete Paving and Structural Construction (Non-extruding and Resilient Bituminous Types)
ASTM D448 - Sizes of Aggregate for Road and Bridge Construction
ASTM D2419 - Sand Equivalent Value of Soils and Fine Aggregate
ASTM E119 - Fire Tests of Building Construction and Materials

1.03 SYSTEM DESCRIPTIONS

A. Performance Requirements:
1. General:
a. Except as otherwise specified, provide concrete composed of Portland cement, aggregate, and water so proportioned and mixed as to produce plastic, cohesive workable mixture in accordance with requirements as specified in this Section and suitable to specific conditions of placement.
b. Due to the corrosivity of the soil and recommendations from the Geotechnical Evaluation, concrete shall be made with cement that provides sulfate resistance and that has a maximum water-cementitious materials ratio and minimum compressive strength set forth in 2006 IBC and ACI 318. See also the Geotechnical Evaluation.
c. Proportion fine and coarse aggregates in a manner such as not to produce harshness in placing nor honeycombing in structures.
2. Water tightness of Concrete Work: It is intent of this Section to secure for every part of the Work concrete and grout of homogeneous structure, which when hardened will have required strength, water tightness, and durability. As provided in ACI 350.1/350.1R Concrete for Environmental Structures.
a. It is recognized that some surface hairline cracks and crazing will develop in concrete surfaces.
b. Construction, contraction, and expansion joints have been positioned in structures as indicated on the Drawings, and curing methods specified, for purpose of reducing number and size of these expected from specified concrete mixes.
c. Watertight: Repair cracks as described in this Section which develop in walls or slabs and repair cracks which show any signs of leakage until all leakage is stopped.
d. If patching does not stop the leakage and at the engineer's discretion the installing CONTRACTOR shall pressure inject visible cracks, other than hairline cracks and crazing, in following areas with epoxy as specified in applicable Sections of Division 03 – Concrete.
1) Floors and walls of water bearing structures.
2) Walls and overhead slabs of passageways or occupied spaces, outsides of which are exposed to weather or may be washed down and are not specified to receive separate waterproof membrane.
3) Other Items Not Specified to Receive Separate Waterproof Membrane: Slabs over water channels, wet walls, reservoirs, and other similar surfaces.

3. Workmanship and Methods: Provide concrete work, including detailing of reinforcing, conforming with best standard practices, and as set forth in ACI 318, Manuals, and Recommended Practices.

1.04 SUBMITTALS

A. Submittals shall be furnished in accordance with Section 01 3300 – Submittal Procedures.

B. Product Data: Submit data completely describing products.

C. Information on Heating Equipment to Be Used for Cold Weather Concreting: Submit information on type of equipment to be used for heating materials and/or new concrete in process of curing during excessively cold weather.

D. For conditions that promote rapid drying of freshly placed concrete such as low humidity, high temperature, and wind: Submit corrective measures proposed for use prior to placing concrete.

E. Copies of Tests of Concrete Aggregates: Submit certified copies in triplicate of commercial laboratory tests not more than 90 days old of all samples of concrete aggregates.
   1. Fine Aggregate:
      a. Clay lumps
      b. Reactivity
      c. Shale and chert
      d. Soundness
      e. Color
      f. Decantation
   2. Coarse Aggregate:
      a. Clay lumps and friable particles
      b. Reactivity
      c. Shale and chert
      d. Soundness.
      e. Abrasion loss
      f. Coal and lignite
      g. Materials finer than 200 sieve

F. Sieve Analysis: Submit sieve analysis of fine and coarse aggregates being used in triplicate at least every 3 weeks and at any time there is significant change in grading of materials.

G. Concrete Mixes: Submit full details, including mix design calculations for concrete mixes proposed for use for each class of concrete.
   1. Include information on correction of batching for varying moisture contents of fine aggregate.
   2. Submit source quality test records with mix design submittal.

H. If There is Change in Aggregate Source, Aggregate Quality from Same Source: Submit new set of design mixes covering each class of concrete.

I. If Either Fine or Coarse Aggregate Is Batched from More than One Bin: Submit analyses for each bin, and composite analysis made up from these, using proportions of materials to be used in mix.

J. Cement Mill Tests: Include alkali content, representative of each shipment of cement for verification of compliance with specified requirements.

K. Pozzolan Certificate of Compliance: Identify source of pozzolan and certify compliance with requirements of ASTM C618.

L. Information on mixing equipment.

M. Drying shrinkage test data.

N. Packing and Shipping:
   1. Deliver, store, and handle concrete materials in manner as to prevent damage and inclusion of foreign substances.
   2. Deliver and store packaged materials in original containers until ready for use.
   3. Deliver aggregate to mixing site and handle in such a manner that variations in moisture content will not interfere with steady production of concrete of specified degree of uniformity and slump.

O. Acceptance at Site: Reject material containers or materials showing evidence of water or other damage.

P. Test Batch Test Data:
   1. Submit data for each test cylinder.
   2. Submit data that identifies mix and slump for each test cylinder.

Q. Sequence of Concrete Placing: Submit proposed sequence of placing concrete showing proposed beginning and ending of individual placements.

R. Ties to be used and the tie hole patching procedure and methods and materials.

S. Curing Compound Other than Specified Compound: Submit complete data on proposed compound.

T. Repair of Defective Concrete: Submit mix design for grout or product data if mixed onsite.

U. Acceptance of Method of Concrete Repair: Make no repair until the ENGINEER has accepted method.

1.05 QUALITY ASSURANCE

A. General
   1. Manufacturer Qualifications: A firm experienced in manufacturing ready-mixed concrete products and that complies with ASTM C94/C 94M requirements for production facilities and equipment.
   2. Tests for compressive strength and shrinkage of concrete shall be performed as indicated herein. Test for determining slump will be in accordance with the requirements of ASTM C143.
   3. The cost of all laboratory tests on concrete will be borne by the CONTRACTOR. The laboratory will meet or exceed the requirements of ASTM C1077.
   4. Concrete for testing shall be supplied by the CONTRACTOR at no additional cost to the OWNER, and the CONTRACTOR shall assist the ENGINEER in obtaining samples, and disposal and cleanup of excess material.

B. Field Testing of Concrete:
   1. During progress of construction, the CONTRACTOR will have tests made to determine whether the concrete, as being produced, complies with requirements specified.
   2. Tests will be performed in accordance with ASTM C31, ASTM C39, and ASTM C172.
   3. The testing company will make and deliver test cylinders to the laboratory and testing expense will be borne by the CONTRACTOR.
   4. Required Number Cylinders:

a. Not less than 3 cylinder specimens, 6 inch diameter by 12 inch long, will be tested for each 150 cubic yards of each class of concrete placed and not less than 3 specimens for each half day's placement.
b. One cylinder will be broken at 7 days and 2 at 28 days.

5. The Testing Agency shall:
   a. Test slump of concrete using slump cone in accordance with the requirements of ASTM C143.
   b. Furnish test equipment.
   c. Do not use the concrete that does not meet specification requirements in regards to slump, but remove such concrete from project site.
   d. Test slump at the beginning of each placement, as often as necessary to keep slump within the specified range, and when requested to do so by the ENGINEER.
   e. Make provisions for and furnish concrete for test specimens, and provide manual assistance to the ENGINEER in preparing said specimens.
   f. Assume responsibility for care of and providing of curing conditions for test specimens in accordance with ASTM C31.

C. Enforcement of Strength Requirement:
   1. Concrete is expected to reach higher compressive strength than that which is indicated on the drawings and herein as specified compressive strength f'c.
   2. Strength Level of Concrete: Will be considered acceptable if the following conditions are satisfied.
      a. Average of all sets of 3 consecutive test results is greater or equal to specified compressive strength f'c.
      b. No individual strength test (average of 2 cylinders) falls below specified compressive strength f'c by more than 500 pounds per square inch.
      c. Whenever one, or both, of 2 conditions stated above is not satisfied, provide additional curing of affected portion followed by cores taken in accordance with ASTM C42 and ACI 318 and comply with the following requirements.
         1) If additional curing does not bring average of 3 cores taken in affected area to at least specified compressive strength f'c, designate such concrete in affected area as defective.
         2) The ENGINEER may require the CONTRACTOR to strengthen defective concrete by means of additional concrete, all at the CONTRACTOR's expense.

D. Construction Tolerances: The CONTRACTOR shall set and maintain concrete forms and perform finishing operations to ensure that the completed WORK is within tolerances. Surface defects and irregularities are defined as finishes and are to be distinguished from tolerances. Tolerance is the permissible variation from lines, grades, or dimensions indicated on the Drawings. Where tolerances are not stated in the specifications, permissible deviations will be in accordance with ACI 117.
   1. The following construction tolerances apply to finished walls and slab unless otherwise indicated:

Item	**Tolerance**
Variation of the Constructed Linear Outline from the Established Position in Plan	In 10 feet: 1/4-in In 20 feet or more: 1/2-in
Variation from the Level or from the Grades Shown	In 10 feet: 1/4-in In 20 feet or more: 1/2-in
Variation from the Plumb	In 10 feet: 1/4-in In 20 feet or more: 1/2-in

Variation in the Thickness of Slabs and Walls	Minus 1/4-in Plus 1/2-in
Variation in the Locations and Sizes of Slabs and Wall Openings	Plus or minus 1/4-in
Variation in Weirs Hydraulic Control Structures	Max deviation in elevation 1/4 in (total)

1.06 PROJECT CONDITIONS

A. Environmental Requirements:
   1. Hot weather concreting:
      a. When Ambient Air Temperature Is Above 90°F: Prior to placing concrete, cool forms and reinforcing steel by water cooling to below 90°F.
      b. Temperature of Concrete Mix at Time of Placement: Keep temperature below 90°F by methods which do not impair quality of concrete.
   2. Cold Weather Concreting:
      a. Concrete placed below ambient air temperature of 45°F and falling or below 40°F: Make provision for heating water.
      b. If materials have been exposed to freezing temperatures to degree that any material is below 35°F: Heat such materials.
      c. Heating Water, Cement, or Aggregate Materials:
         1) Do not heat in excess of 160°F.
      d. Protection of Concrete in Forms:
         1) Protect by means of covering with tarpaulins, or other acceptable covering.
         2) Provide means for circulating warm moist air around forms in manner to maintain temperature of 50°F for at least 5 days.
   3. For conditions that promote rapid drying of freshly placed concrete such as low humidity, high temperature, and wind: Take corrective measures to minimize rapid water loss from concrete.
      a. Furnish and use sufficient number of maximum and minimum self-recording thermometers to adequately measure temperature around concrete.

1.07 SEQUENCING AND SCHEDULING

A. Schedule placing of concrete in such a manner as to complete any single placing operation to construction, contraction, or expansion joint.

PART 2 - PRODUCTS

2.01 CONCRETE MATERIALS

A. Aggregate
   1. General:
      a. Provide concrete aggregates that are sound, uniformly graded, and free of deleterious material in excess of allowable amounts specified.
      a. Grade aggregate in accordance with ASTM D75 and C136.
      b. Provide unit weight of fine and coarse aggregate which produces in place concrete with weight of not less than 140 pounds per cubic foot.

B. Fine Aggregate:
   1. Provide fine aggregate for concrete or mortar consisting of clean, natural sand or of sand prepared from crushed stone or crushed gravel.

2. Do not provide aggregate having deleterious substances in excess of the following percentages by weight of contaminating substances. In no case shall total exceed percent listed.

Item	Test Method	Percent
Removed by Decantation (dirt, silt, etc.)	ASTM C117	3
Shale or Chert	ASTM C295	1
Clay Lumps	ASTM C142	1

3. Except as otherwise specified, grade fine aggregate from coarse to fine in accordance with requirements of ASTM C33.

C. Coarse Aggregate:
1. General: Provide coarse aggregate consisting of gravel or crushed stone made up of clean, hard, durable particles free from calcareous coatings, organic matter, or other foreign substances.
2. Weight: Not exceeding 15 percent, for thin or elongated pieces having length greater than 5 times average thickness.
3. Deleterious Materials: Not in excess of following percentages by weight, and in no case having total of all deleterious substances exceeding 2 percent.

Item	Test Method	Percent
Shale or Chert	ASTM C295	1
Coal and Lignite	ASTM C123	1/4
Clay Lumps and Friable Particles	ASTM C142	1/4
Materials Finer than Number 200 Sieve	ASTM C117	1/2*

NOTE: (*) Except when material finer than Number 200 sieve consists of crusher dust, maximum amount shall be 1 percent>

4. Grading:
   a. Aggregate: As specified in ASTM C33, Size Number 57, except as otherwise specified or authorized in writing by the ENGINEER.
   b. Aggregate for Concrete for Encasement of Electrical Conduits:
      1) Graded as specified in ASTM C33, Size Number 8.
      2) Provide concrete utilizing this aggregate equal to 2500 psi concrete in all other respects, and is designated as Class CE.

D. Portland Cement:
1. General: Conform to specifications and tests for ASTM C150, except as specified otherwise.
2. Low Alkali Portland: Have total alkali containing not more than 0.60 percent, unless specified otherwise, and or where soil conditions permit such use.
3. Exposed Concrete in Any Individual Structure: Use only one brand of Portland cement.
4. Cement for Finishes: Provide cement from the same source and of same type as concrete to be finished.

E. Admixtures:
1. General:
   a. Do not use admixtures of any type, except as specified, unless written authorization has been obtained from the ENGINEER.
   b. Compatible with concrete and other admixtures.

c. Do not use admixtures containing chlorides calculated as chloride ion in excess of 0.5 percent by weight.
d. Use in accordance with manufacturer's recommendations and add each admixture to concrete mix separately.

2. Water Reducing Admixture:
   a. May be used at the CONTRACTOR's option.
   b. Conform to ASTM C494, Type A or Type D.
   c. Not contain air entraining agents.
   d. Liquid form before adding to the concrete mix.
   e. No decrease in cement is permitted as result of use of water reducing admixture.
3. Superplasticizers or Flyash: Are not to be used without acceptance by ENGINEER.

F. Water:
1. Water for Concrete, Washing Aggregate, and Curing Concrete: Clean and free from oil and deleterious amounts of alkali, acid, organic matter, or other substances.
2. Chlorides and Sulfate Ions:
   a. Water for Conventional Reinforced Concrete: Use water not containing more than 1,000 (mg/L) of chlorides calculated as chloride ion, no more than 1,000 (mg/L) of sulfates calculated as sulfate ion.
   b. Water for Pre-stressed or Post-tensioned Concrete: Use water not containing more than 650 (mg/L) milligrams per liter of chlorides calculated as chloride ion, nor more than 800 (mg/l) of sulfates calculated as sulfate ion.

G. Conduit Encasement Coloring Agent:
1. Color: Red color concrete used for encasement of electrical ducts, conduits, and similar type items.
2. Manufacturers: One of the following or ENGINEER-approved equal.
   a. Frank D, Davis Company, Red Oxide Number 117.
   b. I. Reiss Company, Inc., equivalent product.
3. Conduit Encasement Concrete: Mix into each cubic yard of concrete 10 pounds of coloring agent.

H. Keyway Material: Lumber.

I. All curing compounds shall be white pigmented and resin based conforming to ASTM C309, Type D. Sodium silicate compounds shall not be allowed. Concrete curing compound shall be Kurez by Euclid Chemical Company; MB-429 as manufactured by Mater Builders; L&M Cure R; or ENGINEER-approved equal. Water based resin curing compounds shall be used only where local air quality regulations prohibit the use of a solvent based compound. Water based curing compounds shall be Aqua-Cure by Euclid Chemical Company; Masterkure-W by Master Builders; L&M Cure R-2; or ENGINEER-approved equal.

J. Manufacturers: One of the following or ENGINEER-approved equal.
1. WR Meadows
2. CGM Incorporated

K. Plastic Membrane Curing: Use polyethylene film.
1. Color: White
2. Thickness: Minimum 6 mils.
3. Loss of Moisture: Not to exceed 0.055 grams per square centimeter of surface when tested in accordance with ASTM C156.

2.02 CONCRETE DESIGN REQUIREMENTS

A. General: Concrete shall be composed of cement, admixtures, aggregates, and water of the qualities indicated. The exact proportions in which these materials are to be used for different parts of the work will be determined during the trial batch. In general, the mix shall be designed to produce a concrete capable of being deposited so as to obtain maximum density and minimum shrinkage, and, where deposited in forms, to have good consolidation properties and maximum smoothness of surface. The aggregate gradations shall be formulated to provide fresh concrete that will not promote rock pockets around reinforcing steel or embedded items. The proportions shall be changed whenever necessary or desirable to meet the required results at no additional cost to the OWNER. All changes shall be subject to review by the ENGINEER.

B. Fine Aggregate Composition: In mix designs for structural concrete, the percentage of fine aggregate in total aggregate by weight, shall be as indicated in the following table.

Fineness Modulus	**Maximum Percent**
2.7 or less	41
2.7 to 2.8	42
2.8 to 2.9	43
2.9 to 3.0	44

For other concrete, the maximum percentage of fine aggregate of total aggregate, by weight, shall not exceed 50.

C. Water-Cement Ratio and Compressive Strength: Concrete shall have the following minimum properties unless noted otherwise on the plans:

Type of Work	**Min 28-Day Compr. Strength (psi)**	**Max Size Aggregate (in)**	**Minimum Cement per cubic yard (lbs)**	**Non Air Max W/C Ratio (by weight)**
Structural	5,000	1	564	*
Concrete	4,500	1	564	0.38
	4,000	1	564	0.45
Pea Gravel Mix	4,000	3/8	752	0.40
Sitework Concrete	3,000	1	470	0.50
Lean Concrete	2,000	1	376	0.60

NOTES: W/C ration shall be based upon the Geotechnical Evaluation and or Soils Report - Refer to the Evaluation for W/C, and other site dependent concrete recommendations. See the Structural Plan notes for strength application and location.

The CONTRACTOR is cautioned that the limiting parameters above are not a mix design. Additional cement or water reducing agent may be required to achieve workability required by the CONTRACTOR's construction methods and aggregates. The CONTRACTOR is responsible for providing concrete with the required workability.

For strengths above 4500 psi (non-air) concrete proportions shall be established from either existing field data or trial mixes. This information shall be submitted by the ready mix company through the CONTRACTOR for review by the ENGINEER before it will be

approved. The average compressive strength from the test record must equal or exceed the ACI 318 requirements for average compressive strength.

D. Adjustments to Mix Design: The mixes shall be changed whenever such change is necessary or desirable to secure the required strength, density, workability, and surface finish, and the CONTRACTOR shall be entitled to no additional compensation because of such changes.

2.03 CONSISTENCY

A. The quantity of water in a batch of concrete shall be just sufficient, with a normal mixing period, to produce a concrete which can be worked properly into place without segregation and which can be compacted by vibratory methods to give the desired density, impermeability, and smoothness of surface. The quantity of water shall be changed as necessary, with variations in the nature or moisture content of the aggregates, to maintain uniform production of a desired consistency. The consistency of the concrete in successive batches shall be determined by slump tests in accordance with ASTM C143. The slumps shall be as follows:

Part of Work	**Slump (in)**
All concrete, unless indicated otherwise	3 inches plus or minus 1-inch
With high range water reducer added	7 inches plus or minus 2 inches
Pea gravel mix	7 inches plus or minus 2 inches
Ductbanks	5 inches plus or minus 1-inch

2.04 MIXES

A. Measurements of Materials:
1. Measure materials by weighing, except as otherwise specified or where other methods are specifically authorized in writing by the ENGINEER.
2. Furnish apparatus for weighing aggregates and cement that is suitably designed and constructed for this purpose.
3. Accuracy of Weighing Devices: Furnish devices that have capability of providing successive quantities of individual material that can be measured to within one percent of desired amount of that material.
4. Measuring or Weighing Devices: Subject to review by the ENGINEER, and bear valid seal of the Sealer of Weights and Measures having jurisdiction.
5. Weighing Cement:
   a. Weigh cement separately.
   b. Cement in Unbroken Standard Packages (Sacks): Need not be weighed.
   c. Bulk Cement and Fractional Packages: Weigh such cement.
6. Mixing Water: Measured by volume or by weight.

B. Concrete Proportions and Consistency:
1. Concrete Consistency and Composition:
   a. Provide concrete that can be worked readily into corners and angles of forms and around reinforcement without excessive vibration and without permitting materials to segregate or free water to collect on surface.
   b. Prevent unnecessary or haphazard changes in consistency of concrete.
2. Ratio of Coarse Aggregate to Fine Aggregate: Not less than 1.0 nor more than 2.0 for all concrete Classes, with exception of Class CE.
3. Aggregate:

a. Obtain aggregate from source which is capable of providing uniform quality, moisture content, and grading during any single day's operation.

4. Concrete Mix Water to Cement Ratio, Cement Content, and Slump Range: Conform to values specified in Section 2.02.C and per the Geotechnical Evaluation.
5. Concrete Batch Weighs: Control and adjust so as to secure maximum yield, and at all times maintain proportions of concrete mix within specified limits.
6. Mixture Modification: If required, by the ENGINEER, modify mixture within limits set forth in this Section.

C. Concrete Mixes:
1. Proportioning of Concrete Mix: Proportion mixes on required average on compressive strength f'c as defined in the contract documents.
2. Mixes:
a. Adjusting of Water: After acceptance, do not change mixes without acceptance by ENGINEER, except that at all times adjust batching of water to compensate for free moisture content of fine aggregate.
b. Total Water Content of Each Concrete Class: Not exceed those specified in Section 2.02.C, unless noted otherwise or specified in the Geotechnical Evaluation and or Soils Report.
c. Checking Moisture Content of Fine Aggregate: Furnish satisfactory means at batching plant for checking moisture content of fine aggregate.
3. Change in Mixes: Undertake new trial batch and test program as specified in this Section.

D. Hand Mixed Concrete:
1. Hand mix concrete only when acceptable to the ENGINEER.
2. Prepare hand mixed concrete on watertight, level platform in batches not to exceed 1/3 cubic yard each.
3. Aggregate:
a. First spread required amount of coarse aggregate on platform in an even and uniform layer, and then over such aggregate spread proper proportion of fine aggregate.
b. Combined Depth of Both Such Layers: Not be greater than one foot.
4. Cement:
a. First evenly spread required quantity of cement over fine aggregate.
b. Then turn entire batch with shovels at least twice before adding water.
5. Water:
a. Then uniformly sprinkle or spray proper amount of water over batched materials.
b. Then turn with shovels not less than three times before being removing from platform.

2.05 SOURCE QUALITY CONTROL

A. Tests:
1. Concrete Mixes:
a. After concrete mixes have been accepted by ENGINEER, have trial batches of the accepted mix designs prepared by testing laboratory acceptable to the ENGINEER.
b. Prepare trial batches by using specified cement and aggregates proposed to be use for the work.

c. Trial Batches: Provide batches of sufficient quantity to determine slump, workability, consistency, and finishing characteristics, and to provide sufficient test cylinders.

d. Test Cylinders: Provide cylinders having six inch diameter by 12 inch length and that are prepared in accordance with ASTM C31 for tests specified in this Section.

e. Determine slump in accordance with ASTM C143.

f. Test Cylinders from Trial Batch:
   1) Test 8 cylinders for compressive strength in accordance with ASTM C39.
      a) Test 4 cylinders at 7 days and 4 at 28 days.
      b) Establish ratio between 7 day and 28 day strength for mix. Seven day strength may be taken as satisfactory indication of 28 day strength provided effects on concrete of temperature and humidity between 7 day and 28 day are taken into account.
   2) Average Compressive Strength of 4 Test Cylinders Tested at 28 Days: Equal to or greater than required average compressive strength f'c on which concrete mix design is based.

g. Drying Shrinkage:
   1) Prepare 5 drying shrinkage specimens in accordance with ASTM C157, except as modified herein.
   2) Remove drying shrinkage specimens from molds at age of 23 hours plus or minus 1 hour after trial batching, then immediately place them in water at 73°F plus or minus 3 degrees for at least 30 minutes and then measure specimens within 30 minutes thereafter to determine original length. Then submerge specimens in saturated lime water at 73°F plus or minus three degrees for moist curing.
   3) Make measurements to determine expansion expressed as percentage of original length at age 7 days. Use length at age 7 days as base length for drying shrinking calculations.
   4) Immediately store specimens in humidity controlled room maintained at 73°F plus or minus 3 degrees and 50 percent plus or minus 4 relative humidity for remainder of the test.
   5) Make and report measurements to determine shrinkage expressed as percentage of base length separately for 7, 14, 21, and 28 days of drying after 7 days of moist curing.
   6) Drying Shrinkage Deformation:
      a) Measure drying shrinkage deformation of each specimen as difference between base length and length after drying at each test age.
      b) Measure average drying shrinkage deformation of specimens to nearest 0.0001 inch at each test age.
      c) If drying shrinkage of any specimen departs from average of test age by more than 0.0004 inch, disregard results obtained from that specimen and test another specimen.
      d) Shrinkage of trial batch concrete at 28 days drying age shall not exceed 0.045 percent maximum.

h. If trial batch tests do not meet specified requirements for slump, strength, workability, consistency, drying shrinkage, and finishing, change concrete mix design proportions and, if necessary, source of aggregate. Make additional trial batches and tests until an acceptable trial batch is produced that meets requirements of this Section.

i. Perform test batches and tests required to establish trial batches and acceptability of materials without change in Contract Price.

j. Do not place concrete until the concrete mix design and trial batch have been accepted by ENGINEER.

2. Required Average Compressive Strength:

a. Determine required average compressive strength (f'c) for selection of concrete proportions for mix design, for each class of concrete, using calculated standard deviation and its corresponding specified compressive strength f'c, in accordance with ACI 318, Part 3, Chapter 5.

b. When test records of at least 30 consecutive tests that span period of not less that 45 calendar days are available, establish standard deviation as described in ACI 318, Part 3, Chapter 5 and as modified as follows herein.

c. Provide test records from which to calculate standard deviation that represent materials, quality control procedures, and conditions similar to materials, quality control procedures, and conditions expected to apply in preparation of concrete for the Work.

d. Provide changes in materials and proportions within test records that are more restricted than those for the Work.

e. Specified Compressive Strength (f'c) of Concrete Used in Test Records: Within 1,000 pounds per square inch of that specified for the Work.

f. When lacking adequate test records for calculation of standard deviation meeting requirements, determine required average compressive strength f'c from the following table.

Specified Compressive Strength f'c (pounds per square inch)	**Required Average Compressive Strength f'c (pounds per square inch)**
Less than 3,000	f'c + 1,000
3,000 to 5,000	f'c + 1,200
Over 5,000	f'c + 1,400

3. Pozzolan:

a. Sampling and Testing:

1) Sample and test pozzolan in accordance with ASTM C311.

2) In Computing Water to Cement Ratio and Cement Content per Cubic Yard of Concrete: Consider cement weight to be weight of Portland cement plus 100 percent of weight of fly ash.

4. Aggregate:

a. Testing of concrete aggregate is at CONTRACTOR's expense.

b. Sieves:

1) Use sieves with square openings for testing grading or aggregates.

2) Sieve Analysis: If sieve analysis indicates significant change in materials, the ENGINEER may require that new mix design be submitted and accepted before further placing of concrete.

c. Sample aggregate in accordance with ASTM D75 and C136.

d. Fine Aggregate:

1) Provide fine aggregate not containing strong alkali nor organic matter which gives color darker than standard color when tested in accordance with ASTM C40.

2) Provide aggregate having soundness complying with requirements of ASTM C33 when tested in accordance with ASTM C88.

3) Provide aggregate complying with reactivity requirements of ASTM C33 when tested in accordance with ASTM C289.

e. Coarse Aggregate:
   1) Soundness when tested in accordance with ASTM C88: Have loss not greater than 10 percent when tested with sodium sulfate.
   2) Abrasion Loss: Not exceed 45 percent after 500 revolutions when tested in accordance with ASTM C131.
   3) Reactivity: Not exceed limits specified in Appendix of ASTM C33 when tested in accordance with ASTM C289.

f. Portland Cement:
   1) Determination Alkali Content: Determine by method set forth in ASTM C114.

PART 3 - EXECUTION

3.01 PROPORTIONING AND MIXING

A. Proportioning: Proportioning of the mix shall conform to the requirements of Chapter 3 "Proportioning" of ACI 301.

B. Mixing: Mixing shall conform to the requirements of Chapter 7 of said ACI 301 Specifications.

C. Slump: Slumps shall be as indicated herein.

D. Retempering: Retempering of concrete or mortar which has partially hardened shall not be permitted.

3.02 PREPARATION OF SURFACES FOR CONCRETING

A. General: Earth surfaces shall be thoroughly wetted by sprinkling prior to the placing of any concrete, and these surfaces shall be kept moist by frequent sprinkling up to the time of placing concrete thereon. The surface shall be free from standing water, mud and debris at the time of placing concrete.

B. Joints in Concrete: Concrete surfaces upon or against which concrete is to be placed, where the placement of the concrete has been stopped or interrupted so that, as determined by the ENGINEER, the new concrete cannot be incorporated integrally with that previously placed, are defined as construction joints. The surfaces of horizontal joints shall be given a compacted, roughened surface for good bonding. Except where the Drawings call for joint surfaces to be coated, the joint surfaces shall be cleaned of all laitance, loose or defective concrete, foreign material, and be roughened to a minimum ¼-inch amplitude. Such cleaning and roughening shall be accomplished by hydroblasting or sandblasting (exposing aggregate) followed by thorough washing. All pools of water shall be removed from the surface of construction joints before the new concrete is placed.

C. After the surfaces have been prepared, all approximately horizontal construction joints shall be covered with a 6-inch lift of a pea gravel mix. The mix shall be placed and spread uniformly. Wall concrete shall follow immediately and shall be placed upon the fresh pea gravel mix.

D. Placing Interruptions: When placing of concrete is to be interrupted long enough for the concrete to take a set, the working face shall be given a shape by the use of forms or other means, that will secure proper union with subsequent work; provided that construction joints shall be made only where acceptable to the ENGINEER.

E. Embedded Items: No concrete shall be placed until all formwork, installation of parts to be embedded, reinforcement steel, and preparation of surfaces involved in the placing

have been completed and accepted by the ENGINEER at least 4 hours before placement of concrete. All surfaces of forms and embedded items that have become encrusted with dried grout from previous work shall be cleaned before the surrounding or adjacent concrete is placed.

F. All inserts or other embedded items shall conform to the requirements herein.

G. All reinforcement, anchor bolts, sleeves, inserts, and similar items shall be set and secured in the forms at locations indicated on the Drawings or shown by shop drawings and shall be acceptable to the ENGINEER before any concrete is placed. Accuracy of placement is the responsibility of the CONTRACTOR.

H. Casting New Concrete Against Old: Where concrete is to be cast against old concrete (any concrete which is greater than 180 days of age), the surface of the old concrete shall be thoroughly cleaned and roughened by hydro-blasting or sandblasting (exposing aggregate). The joint surface shall be coated with an epoxy bonding agent unless indicated otherwise by the ENGINEER.

I. No concrete shall be placed in any structure until all water entering the space to be filled with concrete has been properly cut off or has been diverted by pipes, or other means, and carried out of the forms, clear of the WORK. No concrete shall be deposited underwater nor shall the CONTRACTOR allow still water to rise on any concrete until the concrete has attained its initial set. Water shall not be permitted to flow over the surface of any concrete in such manner and at such velocity as will injure the surface finish of the concrete. Pumping or other necessary dewatering operations for removing ground water, if required, shall be subject to the review of the ENGINEER.

J. Corrosion Protection: Pipe, conduit, dowels, and other ferrous items required to be embedded in concrete construction shall be so positioned and supported prior to placement of concrete that there will be a minimum of 2 inches clearance between said items and any part of the concrete reinforcement. Securing such items in position by wiring or welding them to the reinforcement will not be permitted.

K. Openings for pipes, inserts for pipe hangers and brackets, and anchors shall, where practicable, be provided during the placing of concrete.

L. Anchor bolts shall be accurately set and shall be maintained in position by templates while being embedded in concrete.

M. Cleaning: The surfaces of all metalwork to be in contact with concrete shall be thoroughly cleaned of all dirt, grease, loose scale and rust, grout, mortar, and other foreign substances immediately before the concrete is placed.

3.03 HANDLING, TRANSPORTING, AND PLACING

A. General: Placing of concrete shall conform to the applicable requirements of Chapter 8 of ACI 301 and the requirements of this Section. No aluminum materials shall be used in conveying any concrete.

B. Non-Conforming Work or Materials: Concrete which during or before placing is found not to conform to the requirements indicated herein shall be rejected and immediately removed from the work. Concrete which is not placed in accordance with these Specifications, or which is of inferior quality, shall be removed and replaced by the CONTRACTOR at no additional cost to the OWNER.

C. Unauthorized Placement: No concrete shall be placed except in the presence of a duly authorized representative of the ENGINEER. The CONTRACTOR shall notify the ENGINEER in writing at least 24 hours in advance of placement of any concrete.

D. Placement in Wall and Column Forms: Concrete shall not be dropped through reinforcement steel or into any deep form, nor shall concrete be placed in any form in

such a manner as to leave accumulation of mortar on the form surfaces above the placed concrete. In such cases, means such as hoppers and, if necessary, vertical ducts of canvas, rubber, or metal shall be used for placing concrete in the forms in a manner that it may reach the place of final deposit without separation. In no case shall the free fall of concrete exceed 4-feet in walls and 8-feet in columns below the ends of ducts, chutes, or buggies. Concrete shall be uniformly distributed during the process of depositing and in no case after depositing shall any portion be displaced in the forms more than 6-feet in horizontal direction. Concrete in wall forms shall be deposited in uniform horizontal layers not deeper than 2-feet; and care shall be taken to avoid inclined layers or inclined construction joints except where such are required for sloping members. Each layer shall be placed while the previous layer is still soft. The rate of placing concrete in wall forms shall not exceed 5-feet of vertical rise per hour. Sufficient illumination shall be provided in the interior of all forms so that the concrete at the places of deposit is visible from the deck or runway.

E. Casting New Concrete Against Old: Epoxy adhesive bonding agent shall be applied to the old surfaces according to the manufacturer's written recommendations. This provision shall not apply to joints where hydrotite waterstop is provided.

F. Conveyor Belts and Chutes: All ends of chutes, hopper gates, and all other points of concrete discharge throughout the CONTRACTOR'S conveying, hoisting, and placing system shall be designed and arranged so that concrete passing from them will not fall separated into whatever receptacle immediately receives it. Conveyor belts, if used, shall be of a type acceptable to the ENGINEER. Chutes longer than 50-feet will not be permitted. Minimum slopes of chutes shall be such that concrete of the indicated consistency will readily flow in them. If a conveyor belt is used, it shall be wiped clean by a device operated in such a manner that none of the mortar adhering to the belt will be wasted. All conveyor belts and chutes shall be covered.

G. Placement in Slabs: Concrete placed in sloping slabs shall proceed uniformly from the bottom of the slab to the top, for the full width of the placement. As the work progresses, the concrete shall be vibrated and carefully worked around the slab reinforcement, and the surface of the slab shall be screeded in an up-slope direction.

H. Temperature of Concrete: The temperature of concrete when it is being placed shall be not more than 90°F nor less than 55°F for s less than 12 inches thick nor less than 50°For all other sections. Concrete ingredients shall not be heated to a temperature higher than that necessary to keep the temperature of the mixed concrete, as placed, from falling below the minimum temperature. When the temperature of the concrete is 85°F or above, the time between the introduction of the cement to the aggregates and discharge shall not exceed 45 minutes. If concrete is placed when the weather is such that the temperature of the concrete would exceed 90°F, the CONTRACTOR shall employ effective means, such as pre-cooling of aggregates and mixing water using ice or placing at night, as necessary to maintain the temperature of the concrete, as it is placed, below 90°F. The CONTRACTOR shall not be entitled to any additional compensation on account of the foregoing requirements.

I. Cold Weather Placement:
   1. Placement of concrete shall conform to ACI 306.1 - Cold Weather Concreting, and the following.
   2. Remove all snow, ice, and frost from the surfaces, including reinforcement, against which concrete is to be placed. Before beginning concrete placement, thaw the subgrade to a minimum depth of 6 inches. All reinforcement and embedded items shall be warmed to above 32°F prior to concrete placement.
   3. Maintain the concrete temperature above 50°F for at least 5 days after placement.

3.04 PUMPING OF CONCRETE

A. General: If the pumped concrete does not produce satisfactory end results, the CONTRACTOR shall discontinue the pumping operation and proceed with the placing of concrete using conventional methods.

B. Pumping Equipment: The pumping equipment shall have two (2) cylinders and be designed to operate with one cylinder in case the other one is not functioning. In lieu of this requirement, the CONTRACTOR may have a standby pump on the site during pumping.

C. The minimum diameter of the hose conduits shall be in accordance with ACI 304.2R.

D. Pumping equipment and hose conduits that are not functioning properly shall be replaced.

E. Aluminum conduits for conveying the concrete shall not be permitted.

F. Field Control: Concrete samples for slump and test cylinders will be taken at the placement end of the hose.

3.05 ORDER OF PLACING CONCRETE

A. The order of placing concrete in all parts of the WORK shall be acceptable to the ENGINEER. In order to minimize the effects of shrinkage, the concrete shall be placed in units as bounded by construction joints at the indicated locations. The placing of units shall be done by placing alternate units in a manner such that each unit placed shall have cured at least 5-days for hydraulic structures and 2-days for all other structures before the contiguous unit or units are placed, except that the corner sections of vertical walls shall not be placed until the two (2) adjacent wall panels have cured at least 10 days for hydraulic structures and 4-days for all other structures.

B. The surface of the concrete shall be level whenever a run of concrete is stopped. To insure a level, straight joint on the exposed surface of walls, a wood strip at least ¾-inch thick shall be tacked to the forms on these surfaces. The concrete shall be carried about ½-inch above the underside of the strip. About one hour after the concrete is placed, the strip shall be removed and any irregularities in the edge formed by the strip shall be leveled with a trowel and all laitance shall be removed.

3.06 TAMPING AND VIBRATING

A. As concrete is placed in the forms or in excavations, it shall be thoroughly settled and compacted, throughout the entire depth of the layer which is being consolidated, into a dense, homogeneous mass, filling all corners and angles, thoroughly embedding the reinforcement, eliminating rock pockets, and bringing only a slight excess of water to the exposed surface of concrete. Vibrators shall be Group 3 per ACI 309, high speed power vibrators (8,000 to 12,000 rpm) of an immersion type in sufficient number and with at least one standby unit as required. Group 2 vibrators may be used only at specific locations when accepted by the ENGINEER.

B. Care shall be used in placing concrete around hydrotite waterstops. The concrete shall be carefully worked by rodding and vibrating to make sure that all air and rock pockets have been eliminated. Where flat-strip type hydrotite waterstops are placed horizontally, the concrete shall be worked under the hydrotite waterstops by hand, making sure that all air and rock pockets have been eliminated. Concrete surrounding the hydrotite waterstops shall be given additional vibration over and above that used for adjacent concrete placement to assure complete embedment of the hydrotite waterstops in the concrete.

C. Concrete in walls shall be internally vibrated and at the same time rammed, stirred or worked with suitable appliances, tamping bars, shovels or forked tools until it completely

fills the forms or excavations and closes snugly against all surfaces. Subsequent layers of concrete shall not be placed until the layers previously placed have been worked thoroughly. Vibrators shall be provided in sufficient numbers, with standby units as required, to accomplish the required results within 15 minutes after concrete of the prescribed consistency is placed in the forms. The vibrating head shall not contact the surfaces of the forms. Care shall be taken not to vibrate concrete excessively or to work it in any manner that causes segregation of its constituents.

3.07 FINISHING CONCRETE SURFACES

A. General: Surfaces shall be free from fins, bulges, ridges, offsets, honeycombing or roughness of any kind, and shall present a finished, smooth, continuous hard surface. Allowable deviations from plumb or level and from the alignment, profiles and dimensions shown are defined as tolerances and are indicated in Part 1, above. These tolerances are to be distinguished from irregularities in finish as described herein. Aluminum finishing tools shall not be used.

B. Formed Surfaces: No treatment is required after form removal except for curing, repair of defective concrete, and treatment of surface defects. Where architectural finish is required, it shall be as indicated. Surface holes larger than ½-inch in diameter or deeper than ¼-inch are defined as surface defects in basins and exposed walls and shall be patched per Section 3.11 Treatment of Surface Defects.

C. Unformed Surfaces: After proper and adequate vibration and tamping, all unformed top surfaces of slabs, floors, walls, and curbs shall be brought to a uniform surface with suitable tools. Immediately after the concrete has been screeded, it shall be treated with a liquid evaporation retardant. The retardant shall be used again after each work operation as necessary to prevent drying shrinkage cracks. The classes of finish specified for unformed concrete surfaces are designated and defined as follows:

1. Finish U1 - Sufficient leveling and screeding to produce an even, uniform surface with surface irregularities not to exceed 3/8-inch. No further special finish is required.
2. Finish U2 - After sufficient stiffening of the screeded concrete, surfaces shall be float finished with wood or metal floats or with a finishing machine using float blades. Excessive floating of surfaces while the concrete is plastic and dusting of dry cement and sand on the concrete surface to absorb excess moisture will not be permitted. Floating shall be the minimum necessary to produce a surface that is free from screed marks and is uniform in texture. Surface irregularities shall not exceed 1/4-inch. Joints and edges shall be tooled where indicated or as determined by the ENGINEER.
3. Finish U3 - After the finish U2 surface has hardened sufficiently to prevent excess of fine material from being drawn to the surface, steel troweling shall be performed with firm pressure such as will flatten the sandy texture of the floated surface and produce a dense, uniform surface free from blemishes, ripples, and trowel marks. The finish shall be smooth and free of all irregularities.
4. Finish U4 - Trowel the Finish U3 surface to remove local depressions or high points. In addition, the surface shall be given a light hairbroom finish with brooming perpendicular to drainage unless otherwise indicated. The resulting surface shall be rough enough to provide a nonskid finish.

D. Unformed surfaces shall be finished according to the following schedule:

UNFORMED SURFACE FINISH SCHEDULE

Area	**Finish**
Grade slabs and foundations to be covered with concrete or fill material	U1
Water bearing slabs with slopes 10 percent and less	U3
Water bearing slabs with slopes greater than 10 percent	U4

Slabs not water bearing	U4
Top surface of walls	U3

3.08 CURING

A. General: All concrete shall be cured for not less than 7 days after placing, in accordance with the methods indicated below for the different parts of the WORK.

Surface to be Cured or Damp proofed	**Method**
Wall sections with forms removed	1
Construction joints between footings and walls, and between floor slab and columns	2
Encasement concrete and thrust blocks	1 or 2
All concrete surfaces not specifically indicated in this paragraph	1
Floor slabs on grade in hydraulic structures	1 or 2
Slabs not on grade	1 or 2

B. Method 1: The surface shall be sprayed with a liquid white pigmented curing compound.
   1. It shall be applied in accordance with the manufacturer's printed instructions at a maximum coverage rate of 200 square feet per gallon and in such a manner as to cover the surface with a uniform film which will seal thoroughly.
   2. Where the curing compound method is used, care shall be exercised to avoid damage to the seal during the 7-day curing period. If the seal is damaged or broken before the expiration of the curing period, the break shall be repaired immediately by the application of additional curing compound over the damaged portion.
   3. Wherever curing compound has been applied by mistake to surfaces against which concrete subsequently is to be placed and to which it is to adhere, compound shall be entirely removed by wet sandblasting just prior to the placing of new concrete.
   4. Curing compound shall be applied as soon as the concrete has hardened enough to prevent marring on unformed surfaces and within 2 hours after removal of forms. Repairs to formed surfaces shall be made within the 2-hour period; provided, however, that any such repairs which cannot be made within the said 2-hour period shall be delayed until after the curing compound has been applied. When repairs are to be made to an area on which curing compound has been applied, the area involved shall first be wet-sandblasted to remove the curing compound.
   5. At all locations where concrete is placed adjacent to a panel which has been coated with curing compound, the panel shall have curing compound.

C. Method 2: This method applies to both walls and slabs.
   1. The concrete shall be kept continuously wet by the application of water for a minimum period of at least seven (7) consecutive days beginning immediately after the concrete has reached final set or forms have been removed.
   2. Until the concrete surface is covered with the curing medium, the entire surface shall be kept damp by applying water using nozzles that atomize the flow so that the surface is not marred or washed.
   3. Curing blankets shall be used as a curing medium to retain the moisture during the curing period. The curing medium shall be weighted or otherwise held substantially in contact with the concrete surface to prevent being dislodged by wind or any other causes. All edges shall be continuously held in place.
   4. The curing blankets and concrete shall be kept continuously wet by the use of sprinklers or other means both during and after normal working hours.

5. Immediately after the application of water has terminated at the end of the curing period, the curing medium shall be removed, any dry spots shall be rewetted and curing compound shall be immediately applied in accordance with Method 4 above.
6. The CONTRACTOR shall dispose of excess water from the curing operation to avoid damage to the work.

3.09 PROTECTION

A. The CONTRACTOR shall protect all concrete against injury until final acceptance at the CONTRACTOR's own expense and at no additional cost to the OWNER

B. Fresh concrete shall be protected from damage due to rain, hail, sleet, or snow. The CONTRACTOR shall provide such protection while the concrete is still plastic and whenever precipitation is imminent or occurring.

3.10 CURING IN COLD WEATHER

A. The CONTRACTOR shall protect all concrete against injury from cold weather until final acceptance at the CONTRACTOR's own expense and at no additional cost to the OWNER.

B. Concrete cured by an application of curing compound will require no additional protection from freezing if the protection at 50°F for 72 hours is obtained by means of approved insulation in contact with the forms or concrete surfaces; otherwise the concrete shall be protected against freezing temperatures for 72 hours immediately following 5 days protection at 50°F. Concrete cured by water shall be protected against freezing temperatures for 3 days immediately following the 72 hours of protection at 50°F.

C. Discontinuance of protection against freezing temperatures shall be such that the drop in temperature of any portion of the concrete will be gradual and will not exceed 40°F in 24 hours. In the spring, when the mean daily temperature rises above 40°F for more than three (3) successive days, the specified 72-hour protection at a temperature not lower than 50°F may be discontinued for as long as the mean daily temperature remains above 40°F; provided, that the concrete shall be protected against freezing temperatures for not less than 48 hours after placement.

D. Where artificial heat is employed, special care shall be taken to prevent the concrete from drying. Use of un-vented heaters will be permitted only when unformed surfaces of concrete adjacent to the heaters are protected for the first 24 hours from an excessive carbon dioxide atmosphere by application of curing compound; provided, that the use of curing compound for such surfaces is otherwise permitted by these Specifications.

3.11 TREATMENT OF SURFACE DEFECTS

A. As soon as forms are removed, all exposed surfaces shall be carefully examined and any irregularities shall be immediately patched or ground in a satisfactory manner in order to secure a smooth, uniform, and continuous surface. Plastering or coating of surfaces to be smoothed will not be permitted. No repairs shall be made until after inspection by the ENGINEER. In no case will extensive patching of honeycombed concrete be permitted. Concrete containing minor voids, holes, honeycombing, or similar depression defects shall be repaired as indicated below. Concrete containing extensive voids, holes, honeycombing, or similar depression defects shall be completely removed and replaced. All repairs and replacements herein required shall be promptly executed at no increased cost to the OWNER.

B. Defective surfaces to be repaired shall be cut back from true line a minimum depth of ½-inch over the entire area. Feathered edges will not be permitted. Where chipping or cutting tools are not required in order to deepen the area properly, the surface shall be

prepared for bonding by the removal of all laitance or soft material, plus not less than 1/32-inch depth of the surface film from all hard portions by means of an efficient sandblast. After cutting and sandblasting, the surface shall be wetted sufficiently in advance of shooting with shotcrete or with cement mortar so that while the repair material is being applied, the surfaces underneath will remain moist but not so wet as to overcome the suction upon which a good bond depends. The material used for repair proposed shall consist of a mixture of one sack of cement to 3-cubic feet of sand. For exposed walls, the cement shall contain such a proportion of Atlas white Portland cement as is required to make the color of the patch match the color of the surrounding concrete. In hydraulic structures the material used for repair shall be hydraulic cement as defined in this Section under Products.

C. Holes left by tie-rod cones shall be rubber stopped and grouted. Holes then shall be repaired in an approved manner with dry-packed cement grout. Holes left by form-tying devices having a rectangular cross-section and other imperfections having a depth greater than their least surface dimension shall not be reamed but shall be repaired in an approved manner with dry-packed cement grout.

D. All repairs shall be built up and shaped in such a manner that the completed work will conform to the requirements of this Section, as applicable, using approved methods which will not disturb the bond, cause sagging, or cause horizontal fractures. Surfaces of repairs shall receive the same kind and amount of curing treatment as required for the concrete in the repaired section.

E. Prior to filling any structure with water, all cracks that may have developed shall be "vee'd" as indicated in specs or in the field and filled with sealant conforming to the requirements of the applicable Sections of Division 03 – Concrete. This repair method shall be done on the water bearing face of members. Prior to backfilling, faces of members in contact with fill, which are not covered with a waterproofing membrane shall also have cracks repaired as indicated herein.

3.12 PATCHING HOLES IN CONCRETE

A. Patching Small Holes:
   1. Holes which are less than 12 inches in the least dimension and extend completely through concrete members shall be filled.
   2. Small holes in members which are water-bearing or in contact with soil or other fill material shall be filled with non-shrink grout or hydraulic cement in wet tanks. Where a face of the member is exposed to view, the non-shrink grout shall be held back 2 inches from the finished surface. The remaining 2 inches shall then be patched according to the Paragraph entitled "Treatment of Surface Defects."
   3. Small holes through all other concrete members shall be filled with non-shrink grout or hydraulic cement, with exposed faces treated as above.

B. Patching Large Holes:
   1. Holes which are larger than 12 inches in the least dimension shall have a keyway chipped into the edge of the opening all around, unless a formed keyway exists. The holes shall then be filled with concrete as indicated herein.
   2. Holes which are larger than 24 inches in the least dimension and which do not have reinforcing steel extending from the existing concrete, shall have reinforcing steel set in grout in drilled holes. The reinforcing added shall match the reinforcing in the existing wall unless indicated otherwise.
   3. Large holes in members which are water bearing or in contact with soil or other fill shall have a bentonite type hydrotite waterstop material placed around the perimeter of the hole in accordance with the applicable Sections of Division 03 – Concrete, unless there is an existing hydrotite waterstop in place.

3.13 CARE AND REPAIR OF CONCRETE

A. The CONTRACTOR shall protect all concrete against injury or damage from excessive heat, lack of moisture, over-stress, or any other cause until final acceptance. Particular care shall be taken to prevent the drying of concrete and to avoid roughening or otherwise damaging the surface. Any concrete found to be damaged, or which may have been originally defective, or which becomes defective at any time prior to the final acceptance of the completed WORK, or which departs from the established line or grade, or which, for any other reason, does not conform to the requirements of the Contract Documents, shall be satisfactorily repaired or removed and replaced with acceptable concrete at no additional cost to the OWNER.

END OF SECTION

SECTION 03 4100 – PRECAST CONCRETE UTILITY STRUCTURES

PART 1 – GENERAL

1.01 THE REQUIREMENT

A. The CONTRACTOR shall furnish and install structural pre-cast concrete work in accordance with the Contract Documents.

B. This Section covers the design, fabrication, delivery, and installation of all pre-cast concrete units, including connections, complete, in place, as shown and specified.

C. American Iron and Steel (AIS) requirement applies to this section. All iron and steel products used in this project must be produced in the United States.

D. Soils Report: This work shall conform to the requirements of the latest Geotechnical Evaluation and / or Soils Report.

1.02 CODES AND STANDARDS

A. Referenced Documents:

1. ASTM Standards:

A82	Steel Wire, Plain, for Concrete Reinforcement
A184	Fabricated Deformed Steel Bar Mats for Concrete Reinforcement
A185	Steel Welded Wire, Fabric, Plain, for Concrete Reinforcement
A496	Steel Wire, Deformed, for Concrete Reinforcement
A497	Welded Deformed Steel Wire Fabric for Concrete Reinforcement
A615	Deformed and Plain Billet-Steel Bars for Concrete Reinforcement
A616	Rail-Steel Deformed and Plain Bars for Concrete Reinforcement
A617	Axle-Steel Deformed and Plain Bars for Concrete Reinforcement
A706	Low-Alloy Steel Deformed Bars for Concrete Reinforcement
C31	Making and Curing Concrete Test Specimens in the Field
C33	Concrete Aggregates
C39	Compressive Strength of Cylindrical Concrete Specimens
C42	Obtaining and Testing Drilled Cores and Sawed Beams of Concrete
C94	Ready-Mixed Concrete
C150	Portland Cement
C192	Making and Curing Concrete Test Specimens in the Laboratory
C231	Air Content of Freshly Mixed Concrete by the Pressure Method
C260	Air-Entraining Admixtures for Concrete
C330	Lightweight Aggregates for Structural Concrete
C478	Precast Reinforcement Concrete Manhole Sections
C494	Shear Fatigue of Sandwich Core Materials
C595	Blended Hydraulic Cements
C618	Coal Fly Ash and Raw or Calcined Natural Pozzolan for Use as a Mineral Admixture in Concrete
C857	Minimum Structural Design Loading for Underground Precast Concrete Utility Structures

2. American Concrete Institute Standards:
   a. ACI 318 Building Code Requirements for Reinforced Concrete
3. American Welding Society Standards:
   a. AWS-D1.4 Structural Welding Code Reinforcing Steel

1.03 SUBMITTALS

A. Submittals shall be made in accordance with Section 01 3300 – Submittal Procedures.

B. Shop Drawings:
   1. Shop drawings shall show structure dimensions and orientation and location of all applicable inflow and outflow penetrations, access hatches, and conduit sleeves.
   2. Shop drawings shall include design structural calculations, assuming the applicable seismic zone and project groundwater conditions, that are stamped and signed by a Professional Engineer registered in Arizona and shall be approved by the ENGINEER.
   3. Shop drawings shall indicate pre-cast unit identification marks, location of units in the WORK, elevations, fabrication details, joint details, reinforcement, connections, dimensions, interface with adjacent members, and special handling instructions in sufficient detail to cover manufacture, handling and erection. Shop drawings shall include erection drawings.

C. Test Reports: Tests for compressive strength of concrete shall be performed by the factory. Copies of test reports including all test data and all test results shall be submitted.

D. Certificates of Compliance: Certificates of compliance shall be submitted attesting that materials and products meet or exceed specified requirements.

1.04 QUALITY ASSURANCE

A. General Requirements: Design members under direct supervision of a Professional Engineer experienced in design of pre-cast concrete units, registered in the State of Arizona, and conforming to requirements of this specification.
   1. Manufacture, Transportation, and Installation: The Manufacturer shall specialize in providing pre-cast products and services normally associated with pre-cast concrete construction with high quality finishes similar to that indicated on drawings.

1.05 DELIVERY, STORAGE, AND HANDLING

A. General: Pre-cast members shall be handled to position consistent with their shape and design; they shall be lifted and supported from design incorporated support points and provided with strong backs and other devices as required. Lifting or handling equipment shall be capable of maintaining units during manufacture, storage, transportation, erection, and in position for fastening.

B. Blocking and supports, lateral restraints and protective materials during transport and storage shall be clean, non-staining, without causing harm to exposed surfaces, including temporary support to prevent bowing and warping. Lateral restraints shall be provided to prevent undesirable horizontal movement. Edges and exposed faces of members shall be protected to prevent straining, chipping, or spalling of concrete.

C. Units shall be marked with date of production and final position in structure in location not visible after erection.

D. Pre-cast units shall be stored off the ground in a manner to prevent warpage and they shall be protected from weather, marring, and overload.

E. Stainless Steel Hardware: Stainless steel hardware shall be transported, handled, stored, and protected in wood crates.

PART 2 – PRODUCTS

2.01 MATERIALS

A. Cement: ASTM C150 or ASTM C595.

B. Aggregates: ASTM C33 and ASTM C330, except that the requirements for grading shall not apply.

C. Admixtures: May be used provided such admixtures are not injurious to other products used in the concrete.

D. Chemical Admixtures: ASTM C494

E. Fly Ash and Pozzolanic Admixture: ASTM C618
   1. Water: Used for curing, washing, aggregate, or mixing concrete shall be clean and free of injurious amounts of oil, acids, alkalis, salts, organic materials, or other substances that may be incompatible with concrete or steel.

F. Steel Reinforcement:
   1. Wire ASTM A82 or ASTM A496
   2. Wire Fabric ASTM A185 or ASTM A497
   3. Bars ASTM A184, ASTM A615, ASTM A616, ASTM A617 or ASTM A706

2.02 DESIGN REQUIREMENTS

A. Design Method: The elastic method of structural design or the ultimate strength method of reinforced concrete design as outlined in ACI 318 shall be used to design the concrete sections, including the reinforcement required, when the structure is subjected to the loading conditions covered in Practice C857.

B. Access Openings: The structural design shall take into consideration the number, placement, and size of access openings.

C. Floors: The minimum floor thickness resulting from slope shall be considered as nominal floor thickness in the structure.

D. Terminators, Knockouts and Sumps: Duct terminators, knockouts and sumps shall be designed to carry the loads imposed upon them. The basic structure shall be designed to carry all imposed loads with knockouts removed.

E. Placement of Reinforcement: The design concrete cover for reinforcing bars, mats or fabric shall not be less than ¾-inch (19 mm) subject to the requirements of Section 2.2.

F. Concrete Strength: The minimum specified compressive strength for design shall be 4,000 psi (21 MPa) at 28 days of age. Compressive-strength tests should be made in accordance with Practices C31 and C192 and Test Methods C39 and C42.

G. Joints: Joints in sectional precast concrete structure shall be designed so as to be self-aligning when assembling sections of the structure.
   1. The manufacture shall provide a single joint design on all units of the same size and type to ensure interchangeability.

H. Lifting Devices: Design of embedded lifting devices shall conform to requirements as specified in 8.4 under Special Loading Considerations of Practice ASTM C890.

I. Pickup Points and Boxouts: Pickup points, boxouts and inserts on panel faces and surfaces to be exposed are prohibited except as approved.

J. Traffic Loads: Structure and access hatches shall be designed for HS-20-44 traffic wheel loads per AASHTO as last revised, including a 30% impact factor.

2.03 MANUFACTURE

A. Forms: Forms shall be accurately constructed and strong enough to maintain the structure's dimensions within the tolerances given in Section 2.4. Forms should be constructed in such a manner as to minimize the seepage of water. All casting surfaces shall be smooth nonporous material.

B. Cleaning and Oiling: Forms shall be cleaned before each use. New forms shall be free of paint or other protective coatings that might cling to the surface of the structure. Releasing agents applied to the form to aid in breaking the bond between the form and the concrete shall not be injurious to the concrete.

C. Reinforcement: Steel reinforcement shall conform to the requirements of this specification and shall be securely positioned in the form to maintain design concrete cover given in Section 2.2 during concrete placement. All chairs, bolsters, braces and spacers in contact with form and reinforcing rod shall be of material that will not deteriorate.

D. Mixture: The aggregates shall be sized, graded, proportioned, and thoroughly mixed in a batch mixer with proportions of cement and water as will produce a homogeneous concrete having the required specified compressive strength. If Ready-Mix concrete is used, it shall be in accordance with Specification C 94.

E. Concrete Placement: Concrete shall be deposited as nearly as practicable in its final position. Concrete shall be placed in the form at a rate such that the concrete is plastic at all times and flows readily into all parts of the form and around all reinforcement steel and embedded fixtures without segregation of materials. Concrete that has partially hardened or has been contaminated by foreign material shall not be deposited in the form.

F. Curing: Structures shall be cured by an accepted industry method that will develop the required 28-day compressive strength without affecting the long-term durability of the concrete.

2.04 PERMISSIBILE VARIATIONS

A. Dimensional Tolerances: The length, width, height, or diameter measurements of the structure when measured on the inside surface shall not deviate from the design dimensions more than the following:

Dimension	**Tolerance**
0 to 5-feet (0 to 1.5 m)	+/- 1/4 inch (+/- 6 mm)
5 to 10-feet (1.5 to 3.0 m)	+/- 3/8 inch (+/- 10 mm)
10 to 20 feet (3.0 to 6.1 m)	+/- 1/2 inch (+/- 13 mm)
20 feet (6.1 m) and over	as agreed upon between manufacturer and purchaser

B. Squareness Tolerance: The inside of the precast concrete component shall be square as determined by diagonal measurements. The difference between such measurements shall not exceed the following:

Measured Length	**Allowable Difference**
0 to 10 feet (0 to 0.3 m)	+/- 1/2 inch (+/- 13 mm)
10 to 20 feet (3.0 to 6.1 m)	+/- 3/4 inch (+/- 19 mm)
20 feet (6.1 m) and over	as agreed upon between manufacturer and purchaser

C. Joint Surfaces: The inside joint seam gap between two sections placed together without a joint sealant shall not exceed 3/8-inch (9.5 mm).

D. Insert Location: Insert locations for attachments in each component shall not deviate individually or cumulatively more than ± 1/8-inch (3.18 mm) from dimensions on specification drawings.

E. Reinforcement Location: With reference to thickness of wall or slab, reinforcement shall be within ± ¼-inch (6.3 mm) of the design location, but in no case shall the cover be less than ¾-inch (19 mm). The reinforcement spacing shall not vary more than one tenth of the designed bar spacing nor exceed 1½-inch (38 mm) in variation, except for welded wire mesh which shall conform to Specifications A185 or A497.

F. Slab and Wall Thickness: The slab and wall thickness shall not be less than that shown in the design by more than 5% or 3/16-inch (4.8 mm), whichever is greater. A thickness greater than that required in the design shall not be a cause for rejection.

2.05 REPAIRS

A. Precast concrete structures may be repaired. Repairs shall be performed by the manufacturer, in such a manner as to ensure that the repaired structure conforms to the requirements of this specification.

2.06 INSPECTION

A. The quality of material, process of manufacture, and the finished structure shall be subject to inspection at any time by the purchaser or his representative.

2.07 REJECTION

A. Precast concrete structures or sections of structures shall be subject to rejection upon failure to conform to any specified requirements contained herein, or if any of the following imperfections occur:
   1. Defects that indicate any imperfect concrete mixing and molding, or
   2. Surface defects indicated by honeycombed or open-texture and damaged areas where such defects would affect the structural adequacy.

2.08 CERTIFICATION

A. At the request of the purchaser, the manufacturer shall, prior to the actual delivery of a structure, furnish a statement giving the source and type of cement, the source and specific gravities of the aggregates, the concrete mix proportions, strength, type, amount, and name of admixtures and mill certificates for the reinforcement steel used in manufacture.

2.09 MARKING

A. The weight shall be marked on the outside of each component section.

B. The purchaser may request additional information to be marked on the component section when ordering.

C. The method of marking shall be agreed upon between the purchaser and the supplier prior to ordering.

PART 3 – EXECUTION

3.01 INSTALLATION

A. Erection:
   1. The units shall be erected in accordance with approved shop/erection drawings without damage to shape or finish or adjacent work. Unless otherwise shown, members shall be erected level and plumb within allowable tolerances.
   2. The CONTRACTOR shall align and maintain uniform horizontal joints as erection progresses, provide approved shims and wedges as required, and when members required adjustment beyond design or tolerance criteria, discontinue affected work. Units shall be secured in place and field welds; scratches and otherwise damaged steel surfaces shall be touched up.
   3. Pickup points, boxouts, inserts and bearing surfaces shown shall be grouted with non-shrink grout in accordance with these Specifications. The color and texture of concrete surfaces of adjacent areas shall be finished to match in the same plane.

3.02 PROTECTION

A. Adjacent surfaces shall be protected from damage during sealing and cleaning operations and against damage, disfiguration, or discoloration from subsequent operations. Noncombustible shielding shall be used during welding operations.

END OF SECTION

SECTION 03 6000 – GROUTING

PART 1 - GENERAL

1.01 THE REQUIREMENT

A. Provide and place grout in accordance with the Contract Documents.

B. Section Includes:
   1. Concrete Mortar
   2. Grout
   3. Dry-pack Mortar
   4. Non-shrink Grout
   5. Epoxy grout
   6. Non-shrink epoxy grout

C. Refer to the applicable Sections of Division 03 – Concrete.

1.02 REFERENCES

A. American Society for Testing and Materials (ASTM):

C109	Compressive Strength of Hydraulic Cement Mortars (using 2 inch or 50 millimeter cube specimens)
C230	Flow Table for Use in Tests of Hydraulic Cement
C531	Liner Shrinkage and Coefficient of Thermal Expansion of Chemical-Resistant Mortars, Grouts, Monolithic Surfacing and Polymer Concretes
C579	Compressive Strength of Chemical-Resistant Mortars and Monolithic Surfacing
C827	Change in Height at Early Ages of Cylindrical Specimens from Cementitious Mixtures
C939	Flow of Grout for Preplaced-Aggregate Concrete (Flow Cone Method)
C1090	Measuring Change in Height of Cylindrical Specimens from Hydraulic-Cement Grout
C1107	Packaged Dry, Hydraulic-Cement Grout (non-shrink)
C1181	Compressive Creep of Chemical-Resistant Polymer Machinery Grouts

1.03 SUBMITTALS

A. Furnish submittals in accordance with Section 01 3300 – Submittal Procedures.

B. Grout: Submit manufacturer's Literature and certified test data prior to installation of any grout mixes.

1.04 DELIVERY, STORAGE, AND HANDLING

A. All materials shall be delivered to the jobsite in their original, unopened packages or containers, clearly labeled with the manufacturer's product identification and printed instructions.

B. All materials shall be stored in a cool dry place and in accordance with the manufacturer's recommendations.

C. All materials shall be handled in accordance with the manufacturer's instructions.

1.05 PROJECT/SITE CONDITIONS

A. Refer to manufacturer's literature or contact the manufacturer for any special physical or environmental limitations that may be required for use of products.

1.06 WARRANTIES

A. Non-shrink Grout: The manufacturer shall warranty that the non-shrink grout will never go below its initial placement volume when tested in accordance with ASTM C1107.

B. Non-shrink Epoxy Grout: The manufacturer shall warranty that the non-shrink epoxy grout will show negligible shrinkage or expansion when tested in accordance with ASTM C531.

PART 2 - PRODUCTS

2.01 MATERIALS

A. Concrete Mortar:
   1. General: Consist of concrete mixture with coarse aggregate removed and water quantity adjusted as required.
   2. At Exposed Concrete Surfaces Not to Be Painted or Submerged in Water: White Cement.

B. Grout: Consist of mixture of Portland cement and sand.

C. Dry-pack:
   1. Mortar consists of mixture of Portland cement and sand.
   2. Hydraulic Cement Manufacturers
      a. Aqua Plug
      b. Unitex Hydraulic Cement
      c. Thoro Water Plug

D. Non-shrink Grout:
   1. Manufacturers: One of the following or ENGINEER-approved equal:
      a. Five Star Products, Inc., Fairfield, CT, Five Star Grout.
      b. Master Builders, Inc., Cleveland, OH, Masterflow 928.
      c. L&M Construction Chemicals, Inc., Omaha, NE, CRYSTEX
   2. Non-shrink grout shall be a proportioned and prepackaged cement-based mixture. It shall contain no metallic particles such as aluminum powder and no metallic aggregate such as iron filings. It shall require only the addition of potable water.
   3. Potable water for pre-soaking, mixing, and curing shall be clean and free of oils, acids, alkalis, organics, and any other deleterious matter.
   4. Bleeding: Non-shrink grout shall be free from the emergence of mixing water from within or the presence of water on its surface.
   5. Non-shrink grout shall be in accordance with ASTM C1107.
   6. Consistency: Non-shrink grout shall remain at a minimum flowable consistency for at least 45 minutes after mixing at 45°F to 90°F when tested in accordance with ASTM C230. If at a fluid consistency, it shall be verified in accordance with ASTM C939.
   7. Dimensional Stability (height change): Non-shrink grout shall be in accordance with ASTM C1107, volume-adjusting Grade B or C at 45°F to 90°F. It shall show 90 percent or greater bearing area under bases or baseplates.
   8. Compressive Strength: Non-shrink grout shall show minimum compressive strengths at 45°F to 90°F in accordance with ASTM C1107 for various periods from the time of placement, including 5,000 pounds per square inch at 28 days when tested in accordance with ASTM C109 as modified by C1107.

E. Epoxy Grout:
   1. Consist of mixture of epoxy and sand.
   2. Sand: Clean, bagged, graded, and kiln dried silica sand.

F. Non-shrink Epoxy Grout:
   1. Manufacturers: One of the following or equal:
      a. Five Star Products, Inc., Fairfield, CT, Five Star Epoxy Grout.
      b. Master Builders, Inc., Cleveland, OH, Masterflow 648 CP Plus.
      c. L&M Construction Chemicals, Inc., Omaha, NE, EPOGROUT.

2. Non-shrink epoxy grout shall be a 100-percent-solids, pre-measured, prepackaged system containing a two-component thermosetting epoxy resin and inert aggregate
3. Consistency: Non-shrink epoxy grout shall maintain a flowable consistency for at least 45 minutes at 70°F.
4. Dimensional Stability (height change):
   a. Non-shrink epoxy grout shall have negligible shrinkage or expansion (less than 0.0006 in/in) when tested in accordance with ASTM C531.
5. Compressive Strength: Non-shrink epoxy grout shall show a minimum compressive strength of 10,000 pounds per square inch at 24 hours and 14,000 pounds per square inch at 7 days when tested in accordance with ASTM C579, Method B.
6. Compressive Creep: The compressive creep for non-shrink epoxy grout shall not exceed 0.0027 in/in when tested under a 400 pounds per square inch constant load at 140 degrees Fahrenheit in accordance with ASTM C1181.
7. Thermal Capability: The coefficient of thermal expansion for non-shrink epoxy grout shall not exceed 0.000018 inches per inch per degree Fahrenheit when tested under ASTM C531, Method B.

2.02 MIXES

A. Concrete Mortar Mix:
   1. Use water-cement ratio that is no more than that specified for concrete being repaired.
   2. At Exposed Concrete Surfaces Not to Be Painted or Submerged in Water: Use sufficient white cement to make color of finished patch match that of surrounding concrete.

B. Grout Mix:
   1. For Concrete Repair: Mix in same proportions used for concrete being repaired, with only sufficient water to give required consistency for spreading.
   2. For Spreading over the Surfaces of Construction or Cold Joints: Mix with no more water used than allowed by water-cement ratio specified for concrete.
   3. For Other Applications: Mix in proportions by weight of one part cement to four parts of concrete sand.

C. Dry-pack Mortar and Hydraulic Cement Mix: Use only enough water so that resulting mortar will crumble to touch after being formed into a ball by hand.

D. Non-shrink Grout: Mix in accordance with manufacturer's installation instructions such that resulting mix has fluid or flowable consistency and is suitable for placing by pouring.

E. Epoxy grout: Mix in accordance with manufacturer's installation instructions for mixing.

F. Non-shrink Epoxy Grout: Mix in accordance with manufacturer's installation instructions.

PART 3 - EXECUTION

3.01 EXAMINATION

A. Inspect concrete surfaces to receive grout or mortar and verify that they are free of ice, frost, dirt, grease, oil, curing compounds, paints, impregnations and all loose material or foreign matter likely to affect the bond or performance of grout or mortar.

B. Inspect baseplate and anchor systems for rust, oil, and other deleterious substances that may affect the bond or performance of grout.

C. Confirm that newly placed concrete has been cured sufficiently to attain its design strength and limit further shrinkage.

D. Verify that temperature of cementitious or epoxy grout does not exceed manufacturer's recommendations.

3.02 PREPARATION

A. Surface Preparation:
   1. Roughen all concrete surfaces by heavy sandblasting, chipping, or other mechanical means to assure bond. Loose or broken concrete shall be removed.
   2. All grease, oil, dirt, curing compounds, laitance, and other deleterious materials that may affect bond that were identified in the inspection process shall be completely removed from concrete and bottoms of baseplates. All metal surfaces should have a 2- to 3-mil peak-to-valley profile for epoxy grouts.
   3. For cementitious mortars and grouts, concrete surfaces shall be saturated surface dry. Any standing water shall be removed prior to placing grouts.
   4. For epoxy grouts, do not wet concrete surfaces with water. Instead, where required, wet surfaces with epoxy for horizontal work or epoxy gel for vertical or overhead work prior to placing epoxy grouts.

B. Forms and Headboxes for Grouts (Cementitious or Epoxy):
   1. Forms for grouts shall be built of material with adequate strength to withstand the placement of grouts.
   2. Forms must be rigid and liquid tight. All cracks and joints shall be caulked with an elastomeric sealant. All forms shall be lined with polyethylene for easy grout release. Forms carefully waxed with two coats of heavy-duty paste wax shall also be acceptable.
   3. Forms shall be 4 to 6 inches higher than the baseplate on one side of the baseplate configuration when using head pressure for placement.
   4. A sufficient number of headboxes shall be built to facilitate placement of grouts.
   5. Air relief holes a minimum 1/8 inch in diameter shall be provided when required by a baseplate configuration to avoid entrapping air underneath.

3.03 APPLICATION

A. Cement Mortar and Grout:
   1. For Defective Concrete Repair:
      a. Filling: Filling of voids around items through the concrete.
      b. Grout Spreading: Spread over construction joints, cold joints, and similar type items.
   2. Concrete Surfaces: Apply epoxy bonding agent to clean, roughened, and dry surfaces before placing mortar or grout.
   3. Placing:
      a. Exercise particular care in placing Portland cement mortar or grout since they are both required to furnish structural strength or impermeable water seal or both.
      b. Do not use cement mortar or grout that has not been placed within 30 minutes after mixing.

B. Epoxy Grout:
   1. Apply in accordance with manufacturer's installation instructions.
   2. Use where specified herein or where indicated on the Drawings.

3.04 PLACEMENT

A. The CONTRACTOR shall arrange to have a grout manufacturer's representative present for a preconstruction meeting and during the initial grout placement. Grout shall only be installed after the final equipment alignment is correct and accepted by the ENGINEER.
   1. Grouts shall be mixed in accordance with the manufacturer's recommendations.

2. A mortar mixer with moving paddles shall be used for mixing grouts. For cementitious grouts, pre-wet the mixer and empty out excess water before beginning mixing.
3. Cementitious Grouts:
   a. Non-shrink cementitious grout shall be added to a pre-measured amount of water that does not exceed the manufacturer's maximum recommended water content.
   b. Mix cementitious grouts per manufacturer's instructions for uniform consistency.
   c. Grouts may be dry packed, flowed, or pumped into place. All baseplate grouting shall take place from one side of a baseplate to the other to avoid trapping air. Do not overwork grouts.
   d. Do not retemper grout by adding more water after stiffening.
   e. Hydrostatic head pressure shall be maintained by keeping the level of the grout in the headbox above the bottom of the baseplate. The headbox should be filled to maximum level and the grout worked down to top of baseplate.
4. Epoxy Grouts:
   a. Epoxy grouts shall be mixed in complete units. Do not vary the ratio if components or add solvent to change the consistency of the mix.
   b. Pour the hardener into the resin and mix for at least one minute and until each mixture is uniform in color. Pour the chemical components into the mortar mixer wheelbarrow and add the aggregate. Mix until aggregate is uniformly wetted. Overmixing will cause air entrapment in the mix.
   c. All epoxy grout shall be flowed into place using a headbox. All grouting shall take place from one side of a baseplate to the other in a continuous flow to avoid trapping air.
   d. Hydrostatic head pressure shall be maintained by keeping the level of grout in headboxes above the bottom of baseplates. Headboxes shall be filled to the maximum level and grout worked down to the bottom of the baseplates.
   e. Epoxy grouts shall not be cut back after setting. The final level of grout will be as installed with all chamfer edges built into the formwork.

3.05 CURING

A. Cementitious Grouts:
   1. Grouts must be cut back to the lower edge of baseplates after reaching initial set. Provide a 45 degree angle cut back.
   2. Clean equipment and tools as recommended by the grout manufacturer.
   3. Cure Grouts in accordance with the manufacturer's specifications and recommendations. Keep grout moist for a minimum of 3 days. The method needed to protect grouts will depend on temperature, humidity, and wind. Wet burlap, a soaker hose, sun shading, ponding and in extreme conditions, a combination of methods shall be employed.
   4. Grouts shall be maintained above 40°F until they have attained a compressive strength of 3,000 pounds per square inch or above 70°F for a minimum of 24 hours to avoid damage from subsequent freezing.

B. Epoxy Grouts:
   1. Cure grouts in accordance with manufacturer's specifications and recommendations. Do not wet cure epoxy grouts.
   2. Consult the manufacturer for appropriate cure schedule. In no case should any surface in contact with grout be allowed to fall below 50°F for a minimum of 48 hours after placement.
   3. Equipment and tools shall be cleaned immediately with a strong liquid detergent and water solution before grout hardens.

3.06 FIELD QUALITY CONTROL

A. Non-shrink grouts shall be tested for 84 hour compressive strength in accordance with ASTM C109.

B. Non-shrink grouts shall be tested for 24 hour compressive strength in accordance with ASTM C579 (Method B).

END OF SECTION

SECTION 03 6423
EPOXY INJECTION GROUTING

PART 1 – GENERAL

1.01 SUMMARY

A. Section Includes: Epoxy injection system.

1.02 REFERENCES

A. American Society for Testing and Materials (ASTM):
   - D638 Tensile Properties of Plastics.
   - D695 Compressive Properties of Rigid Plastics.
   - D790 Flexural Properties of Unreinforced and Reinforced Plastics and Electrical Insulating Materials

1.03 SUBMITTALS

A. Furnish submittals in accordance with Section 01 3300 – Submittal Procedures.

B. Product Data: Submit manufacturer's data completely describing epoxy injection system materials.

C. Quality Control Submittals:
   1. Certificates of Compliance
   2. Manufacturer's Instructions

PART 2 – PRODUCTS

2.01 MATERIALS

A. Manufacturers: One of the following or ENGINEER-approved equal:
   1. Master Builders, Inc., Concressive Standard LVI
   2. Sika Chemical Corp.'s, Sikadur 35, Hi-Mod LV

B. Epoxy: Provide epoxy materials that are new and use them within shelf life limitations set forth by manufacturer. Water-insensitive, 2-part type, low viscosity epoxy adhesive material containing 100 percent solids and meeting or exceeding following characteristics when tested in accordance with standards specified:

Physical Characteristic	**Test Method**	**Required Results**
Tensile Strength	ASTM D638	8,000 pounds per square inch at 14 days and 77°F cure
Flexure Strength	ASTM D790	11,000 pounds per square inch at 14 days and 77°F cure
Compressive Strength	ASTM D695	16,000 pounds per square inch at 24 hours and 77°F cure
Physical Characteristic	Test Method	Required Results
Bond Strength	--	Concrete shall fail before failure of epoxy
Gel Time in 5-Mil Film	--	Four hours maximum at 77°F
Elongation	ASTM D638	1 percent at 14 days and 77°F

2.02 EQUIPMENT

A. Pump Unit:
   1. Furnish unit to be used for injection that is positive displacement type with interlock to provide in-line mixing and metering system for 2-component epoxy.
   2. Furnish pressure hoses and injection nozzle of such design as to allow proper mixing of 2 components of epoxy.
   3. Presence of standby injection unit may be required.

2.03 MIXES

A. Epoxy Injection System Materials:
   1. Mix epoxy in accordance with manufacturer's installation instructions.
   2. Do not use solvents to thin epoxy system materials introduced into cracks or joints.

PART 3 – EXECUTION

3.01 PREPARATION

A. Surface Preparation:
   1. Epoxy Injection System:
      a. General: Before processing, sweep or clean area in vicinity of crack location to receive epoxy and leave in generally clean condition.
      b. Joints to Receive Epoxy: Clean in manner such that joints are free from dirt, laitance, and other loose matter.

3.02 INSTALLATION

A. Install and cure epoxy materials in accordance with manufacturer's installation instructions.

B. Perform and conduct work of this Section in neat orderly manner.

C. Epoxy Injection System:
   1. Apply adequate surface seal to crack or joint to prevent escape of epoxy.
   2. Establish entry points at distance along seal not less than thickness of cracked member.
   3. Force epoxy into crack at first port with sufficient pressure to advance epoxy to adjacent port.
   4. Seal original port and shift entry to port at which epoxy appears.
   5. Continue this manner of port-to-port injection until each joint has been injected for its entire length.
   6. For small amounts, or where excessive grout pressure developed by pump unit might further damage structure, premixed material and hand caulking gun may be used if acceptable to the ENGINEER.
   7. Seal ports, including adjacent locations where epoxy seepage occurs, as necessary to prevent drips or run out

END OF SECTION

SECTION 04 2200 – CONCRETE UNIT MASONRY

PART 1 – GENERAL

1.01 THE REQUIREMENT

A. Provide concrete masonry and other appurtenant work, complete and in place, in accordance with the Contract Documents.

1.02 REFERENCE SPECIFICATIONS, CODES AND STANDARDS

A. Commercial Standards:

ANSI/ASTM	C5 Quicklime for Structural Purposes
ASTM A615	Deformed and Plain Billet-Steel Bars for Concrete Reinforcement
ASTM C90	Load-Bearing Concrete Masonry Units
ASTM C129	Non load bearing Concrete Masonry Units
ASTM C140	Test Methods of Sampling and Testing Concrete Masonry Units
ASTM C144	Aggregate for Masonry Mortar
ASTM C150	Portland Cement
ASTM C207	Hydrated Lime for Masonry Purposes
ASTM C404	Aggregates for Masonry Grout
ASTM E447	Test Methods for Compressive Strength of Masonry Prisms
UBC 21-16	Field Test Specimens for Mortar

1.03 SUBMITTALS

A. Submittals shall be furnished in accordance with Section 01 3300 – Submittal Procedures.

B. Samples:
1. Samples of concrete masonry unit colors with texture ranges indicated for selection of color. Full size samples of the blocks selected shall be submitted for final approval by the ENGINEER after color selection, if requested. If the specified product is a colored and textured unit, the samples shall be colored and textured units.
2. Samples of mortar colors for color selection
3. A 4-foot minimum square free standing sample panel shall be prepared for approval before starting masonry work if required. The panel shall remain at the Site for reference until all masonry work is completed.

C. Documentation:
1. Reports from testing Masonry units. Letter of certification that units meet ASTM standards. Recent test reports on units from independent testing company.
2. Reports from Mortar and Grout testing will be obtained from on-site testing company.

D. Grout and Mortar Mix Design:
1. Proportions for all components
2. Mill Tests for Cement
3. Admixture Certification, include chloride ion content
4. Aggregate Graduation and Certification
5. Lime Certification

1.04 QUALITY ASSURANCE

A. Applicable Standards: Concrete masonry shall conform to the local Building Code, and other applicable codes and standards of governing authorities.

B. All work shall conform to the standard of quality established by the approved free-standing sample panel.

C. Concrete block masonry units and ready mix grout from the job site shall be sampled and tested in accordance with applicable ASTM standards by onsite testing company.

D. Inspection: Whenever required under the provisions of the Building Code, work hereunder will be subject to continuous inspection by a Special Inspector selected by the ENGINEER and approved by the local Building Official having jurisdiction. The Special Inspector will work under the supervision of the ENGINEER.

E. Weather Conditions: Concrete masonry units shall not be placed when air temperature is below 40°F (4°C) and shall be protected against direct exposure to the wind and sun when erected when the ambient air temperature exceeds 100°F (37°C) in the shade with relative humidity less than 50%. Cold weather installation shall be per code and Reference Standards and as approved by the ENGINEER.

F. Product Storage: Cement, lime and other cementitious materials shall be delivered and stored in dry, weather-tight sheds or enclosures, in unbroken bags, barrels, or other approved containers, plainly marked and labeled with the manufacturers' names and brands. Mortar and grout shall be stored and handled in a manner, which will prevent the inclusion of foreign materials and damage, by water or dampness. Masonry units shall be handled with care to avoid chipping and breakage, and shall be stored on wooden pallets. Materials stored on newly constructed floors shall be stacked in such manner that the uniformly-distributed loading does not exceed 50 psf. Masonry materials shall be protected from contact with the earth and exposure to the weather and shall be kept dry and clean until used.

PART 2 – PRODUCTS

2.01 CONCRETE MASONRY UNITS

A. Concrete masonry units shall conform to ASTM C90, Type I, with maximum linear shrinkage of 0.6% from standard to oven-dried condition. Units shall be medium weight units unless indicated otherwise.

B. Concrete masonry units shall be modular size as shown or indicated on the drawings, with split-faces or smooth finish as indicated on the plans. Units shall be integrally-colored or standard unit color with painted exterior as indicated on the drawings with color selections from light and medium color range (white, black, and dark green not included in color range).

C. All bond beam, corner, lintel, sill, and other specially shaped blocks shall be provided where required or necessary. Specially shaped non-structural blocks may be constructed by saw cutting. Color and texture shall match that of adjacent units. No exposed grouted block cells will be allowed. All exposed masonry surfaces of openings and window and door openings such as sills, heads and jambs shall be finish block surfaces, not formed surfaces, unless indicated otherwise. Closed bottom bond beam blocks shall be used at heads and sills.

D. Concrete masonry units hidden from view entirely may be natural color units the same size as other adjacent masonry units.

2.02 MATERIALS

A. Portland Cement shall be Type I or II, low alkali, conforming to ASTM C150. No masonry cement will be allowed.

B. Hydrated lime shall be Type S, conforming to ASTM C207. Pulverized quicklime shall conform to ANSI/ASTM C5, shall pass a No. 20 sieve, and 90% shall pass a No. 50 sieve.

C. Sand shall conform to ASTM C144. Coarse aggregate shall conform to ASTM C404.

D. Water for mixing shall be clear potable water.

E. Reinforcing steel shall be deformed bars conforming to ASTM A615, Grade 60.

F. Any admixtures must be pre-approved prior to usage. See Section 2.04 B.

G. Veneer ties shall be per local governing code and shall be Hot Dip Galvanized per ASTM 153-B2.

H. Horizontal Joint Reinforcement shall be Hot Dip Galvanized ladder-type per ASTM 153-B2

2.03 MORTAR

A. Mortar for concrete block masonry shall be Type S, with a minimum 28-day compressive strength of 1800 psi.

B. Mortar for use with colored masonry units shall have integral color as approved by the ENGINEER.

2.04 GROUT

A. Grout shall have a minimum 28-day compressive strength of 2,000 psi. Where the grout space is less than 4 inches, pea gravel shall be omitted.

B. Admixtures may only be used when approved by the ENGINEER. When it has been approved for use, it shall be used in accordance with the manufacturer's published recommendations for the grout.

PART 3 – EXECUTION

3.01 GENERAL

A. Measurements for mortar and grout shall be accurately made. Mortar proportions shall be accurately controlled and maintained.

B. Work shall be performed in accordance with the provisions of the applicable code for reinforced concrete hollow-unit masonry.

C. Set or embed all anchors, bolts, reglets, sleeves, conduits, and other items as required.

D. All block cutting shall be by machine.

E. Reinforcing steel shall be cleaned of all loose rust and scale, and all oil, dirt, paint, laitance, or other substances, which may be detrimental to or reduce bonding of the steel and concrete.

F. Immediately before starting work, the concrete upon which the masonry will be laid shall be cleaned with water under pressure.

G. Full mortar bed for first course shall be provided.

H. Units shall be shoved tightly against adjacent units to assure good mortar bond.

I. All equipment for mixing and transporting the mortar and grout shall be clean and free from set mortar, dirt, or other foreign matter.

3.02 MIXING

A. Mortar shall be mixed according to ASTM C270. After all ingredients are in the mixer, they shall be mechanically mixed for not less than 5 minutes. Re-tempering shall be done on the mortar board by adding water within a basin formed within the mortar, and the mortar reworked into the water. Mortar, which is not used within 2-1/2 hours, shall be discarded per ASTM requirements.

3.03 ERECTION OF CONCRETE BLOCK MASONRY

A. Masonry work shall be erected in-plane, plumb, level, straight, and true to dimensions and executed in accordance with acceptable practices of the trade.

B. Unless indicated otherwise, masonry shall be laid up in straight uniform courses with running bond.

C. All masonry shall be erected to preserve the unobstructed vertical continuity of the cells measuring not less than 3-inch x 3-inch inch cross-section. Cross webs shall be full bedded in mortar, to prevent grout leakage. All head (or end) joints shall be solidly filled with mortar for a distance in from the face of the wall or unit not less than the thickness of the longitudinal face shells.

3.04 JOINTS

A. Vertical and horizontal joints shall be uniform and approximately 3/8-inch wide. Exterior joints and interior exposed block joints shall be concave-tooled to form dense surface. Special care shall be used in tooling joints so as to match existing construction. Interior or exterior non-exposed masonry and masonry behind plaster shall have flush joints.

3.05 CLEANOUTS

A. Cleanout openings shall be provided at the bottoms of all cells to be filled at each lift or pour of grout, where such lift or pour is over 4-feet in height. Any overhanging mortar larger than ½-inch or other obstructions or debris shall be removed from the insides of such cells. The cleanouts shall be sealed before grouting and after inspection. Cleanout openings shall match the finished wall in exposed masonry.

3.06 REINFORCEMENT

A. Bond beam blocks shall be used where horizontal reinforcing steel is embedded.

B. Knock-out openings shall have no steel or joint reinforcing running through the opening. Head, jambs, and sill blocks shall be used to provide an even finish surface to install window when blocks are removed. Joints at head, jambs and sills shall be stacked and continuous.

C. Vertical reinforcement shall be held in position at top and bottom and at intervals as defined on the drawings.

D. Horizontal joint reinforcing to 16” o.c. in all masonry walls.

E. Veneer ties shall be provided per Building Code and trade standards where veneered surfaces are indicated and shall be spaced no less than 16” o.c. each way.

3.07 GROUTING

A. All cells and bond beam containing reinforcement shall be filled solidly with grout. Grouting shall not be started until the wall has cured for 24 hours.

B. All grout shall be consolidated at time of pouring by vibrating. Where the grouting operation has been stopped for one hour or longer, horizontal construction joints shall be formed by stopping the grout pour 1½ inches below the top of the uppermost unit.

3.08 PROTECTION

A. Wall surfaces shall be protected from droppings of mortar or grout during construction.

3.09 FINISHING AND CLEANING

A. Masonry shall not be wet-finished unless exposed to extreme hot weather or hot wind and then only by using a nozzle-regulated fog spray sufficient only to dampen the face but not of such quantity to cause water to flow down over the masonry.

B. Finish masonry shall be cleaned and pointed in a manner satisfactory to the ENGINEER, based upon the approved sample panel.

C. All interior and exterior colored masonry work exposed to view shall be cleaned to remove all stains and other imperfections.

END OF SECTION

SECTION 05 1213 – STRUCTURAL STEEL

PART 1 – GENERAL

1.01 THE REQUIREMENT

A. Provide structural steel for building construction including sub-framing units, which are part of the general framing system. Include anchors, bases, bearing plates, bracing, lintels when part of structural framing and detail fittings.

B. Modify existing structural steel systems and components to accommodate remodeling and new work.

1.02 SUBMITTALS

A. Submittals shall be furnished in accordance with Section 01 3300 – Submittal Procedures.

1.03 QUALITY ASSURANCE

A. Comply with Governing Codes and Regulations. Provide products of acceptable manufacturers. Use experienced installers. Deliver, handle and store materials in accordance with manufacturer's instructions.

PART 2 – PRODUCTS

2.01 MATERIALS

A. Steel shapes plates and bars: ASTM A36 or ASTM A572, Grade 50

B. Steel pipe: ASTM A53

C. Anchor bolts: ASTM A307

D. High strength threaded fasteners: ASTM A325

E. Non-metallic shrinkage resistant grout; Euclid Euco NS, L&M Crystex, Sonneborn Sonnegrout or ENGINEER-approved equal. Compressive strength suited for Project Requirements.

F. Shop finish for structural steel in accordance to these Specifications.

G. Galvanized lintels: Hot dip galvanized ASTM A123

H. Welding: AWS D1.1

PART 3 – EXECUTION

3.01 INSTALLATION

A. Comply with AISC Codes and Specifications and with AWS "Structural Welding Code."

B. Employ a registered engineer to check elevations and plumb and level tolerances; certify that installed work is within AISC Standards. Testing/inspection agency may be employed to inspect welded and bolted connections.

C. Architecturally Exposed Steel: Fabricate with special care using materials carefully selected for best appearance. Store materials off ground and keep clean. Cut, fit, and assemble work with surfaces smooth, square, and with complete contact at joints. Set all cambers up. Weld all work continuously; grind smooth and flush to make seams invisible after priming. Prepare surfaces to comply with SSPC-SP6; apply prime coat within 24 hours after cleaning.

D. Touch-up field welds and abraded areas in accordance with these Specifications.

E. Provide all necessary bolt, fasteners, anchors, etc. to install or construct this scope of the WORK.

END OF SECTION

SECTION 05 3123 – METAL ROOF DECKING

PART 1 – GENERAL

1.01 DESCRIPTION

A. This section describes materials and installation of metal roof decking.

1.02 SUBMITTALS

A. Submit shop drawings in accordance with Section 01 3300 – Submittal Procedures.

B. Submit complete manufacturer's specifications and installation instructions in advance of fabrication. Include manufacturer's certification showing compliance with these specifications. Indicate on transmittal form to OWNER's Representative that a copy of each instruction has been distributed to the installer.

C. Submit detailed shop drawings showing layout of roof deck panels, anchorage details, and every condition requiring closure panels, supplementary framing, special jointing, or other accessories.

D. Submit current International Conference of Building Officials (ICBO) approval for deck diaphragm shear values for deck welds.

E. Fabrication: Prior to erection of metal decking, deliver to the OWNER's Representative a letter signed by an official of the manufacturer's firm certifying that the metal decking delivered for this WORK was fabricated in accordance with these specifications.

F. Erection: Upon completion of erection, deliver of the OWNER's Representative a letter signed by an official of the erector's firm certifying that metal decking installed in this WORK was installed in accordance with these specifications.

1.03 SUBMITTALS

A. Comply with the current editions of codes and regulations including current editions or revisions and supplements of the following reference standards: ICBO – Latest Edition.

AISI "Specification for the Design of Cold – Formed Steel Structural Members."

AWS "Code for the Welding in Building Construction." SDI "Steel Roof Deck Design Manual."

B. Performance Requirements:

1. Compute the properties of metal floor deck sections on the basis of the effective design width as limited by the provisions of the AISI specifications. Provide not less than the specified deck section properties shown including section modules and moment of inertia per foot of width.
2. Allowable Deflection: Design and fabricate deck for a maximum deflection of 1/360 of the clear span under the total uniform dead and live load.
3. Uplift Loading: Install and anchor roof deck units to resist a gross uplift loading of 30 psf (less dead load for roof areas).

C. Qualifications of Suppliers and Personnel: The erector shall have at least five years' continuous experience in the erection of metal decking.

D. Qualifications of Welding:

1. Quality welding processes and welding operators in accordance with AWS B3.0 "Welding Procedure and Performance Qualification."

2. Decking welded in place is subject to inspection and testing. Expense of removing and replacing any portion of decking for testing purposes will be borne by the Owner if welds are found to be satisfactory. If any welds are found defective, the Contractor shall be responsible for the expense of testing and removal and replacing that portion of decking to the satisfaction of the Owner's Representative.

PART 2 - PRODUCTS

2.01 MATERIALS

A. Form metal roof decking from steel conforming to ASTM A653 SS, Grade 50 min with G90.

B. Decking shall be galvanized.

C. Metal roof decking shall conform to the following properties:

Gauge:	As Shown (20 Min.)
Moment of Inertia:	0.219 in^4
Section Modulus:	+ 0.23 in^3 - 0.237 in^3
Weight per Square Foot:	2.3 (lbs.)
Depth of Corrugations:	1-1/2 inches

2.02 FABRICATION

A. Form deck units in lengths to span three or more support spacing with flush, telescoped, or nested 2-inch end laps and nesting side laps, unless otherwise shown or specified. Provide deck configurations complying with SDI "Basic Design Specifications."

B. Fabricate metal closure strips of painted sheet steel of the same quality as the deck units: not less than nominal 0.0359 inch (20-gauge) thick before coating. Form to the configuration required to provide tight-fitting closures at open ends and sides of decking.

C. Provide decking accessories, including welding washers, anchor washes with ear clips, closures, and filler strips. Provide closure plates and other attachments at openings through decking for ducts, shafts, and other penetrations. Where decking changes directions, and at perimeter, closures shall be of 18-gauge steel unless otherwise indicated.

D. Reinforce decking at openings per manufacturer's requirements.

PART 3 – EXECUTION

3.01 PRODUCT DELIVERY STORAGE AND HANDLING

A. When delivered to the jobsite, store the metal decking off the ground and cover to protect material from the elements. Slope to permit drainage.

B. In the event of damage, immediately make repairs and replacements. Replacements and repairs shall be at CONTRACTOR's expense.

3.02 INSTALLATION OF METAL ROOF DECKING

A. Place metal roof decking with edges up and flutes at right angles to supports. End laps shall always occur over supports, with a minimum end lap of 2 inches for welded attachment. Begin at corner of buildings to maintain alignment. Lap sheets one-half flute at side laps. Attach sheets to top chord of supports by plug welding through special welding washers. Fasten each end lap in the trough of the flutes at each corner (through four thickness of metal) and at center of end lap. Limit the spacing between adjacent points of attachment to 18 inches maximum over all supports. Attach placed sheets at the end of the workday. Metal connections shall be as indicated on plans.

3.03 PAINTING

A. For touch-up on decking, wire brush, clean, and paint scarred areas, welds, and rust spots on top and bottom surfaces of decking units and supporting steel members.

3.04 PROTECTION

A. Do not use deck units for storage or working platforms until permanently secured in position.

B. Assure that construction loads do not exceed carrying capacity of deck.

END OF SECTION

SECTION 05 5000 – METAL FABRICATIONS

PART 1 - GENERAL

1.01 THE REQUIREMENT

A. Provide all labor, materials, bolts, fasteners, equipment, and service necessary for fabrication and erection of structural steel and aluminum and for fabrication and installation of miscellaneous non-ferrous metals in accordance with the Contract Documents and not specifically included under other Sections of these Specifications.
   1. Erection
   2. Shop and Erection Drawings
   3. Shop Painting
   4. Galvanizing
   5. Aluminum Work Protection
   6. Cleaning Aluminum Work
   7. Miscellaneous Items
   8. Loose Lintels
   9. Sleeves and Inserts
   10. Aluminum Pipe Railing
   11. Plate Covers and Frames
   12. Guard Chains
   13. Lifting Hooks
   14. Cast Iron Wheel Guard
   15. Cast Aluminum Nosings
   16. Floor Hatches and Frames
   17. Access Doors

B. American Iron and Steel (AIS) requirement applies to this section. All iron and steel products used in this project must be produced in the United States.

1.02 REFERENCES

A. All work under this Section shall be governed by:
   1. Specifications for the design, fabrication, and erection of structural steel for buildings – American Institute of Steel Construction, current edition.
   2. Aluminum Construction Manual, Section 1, Specifications for Aluminum Structures – The Aluminum Association.
   3. All welding shall conform to the latest code of the American Welding Society.
   4. ANSI B94.12
   5. ASTM A12, A153, A384, A593 and A780
   6. ASTM A48
   7. ASTM A276
   8. ASTM A325
   9. ASTM F593, 294
   10. Federal Specification FF-S-325
   11. Federal Specification TT-V-51F
   12. SSPC SP-1, SP-2, SP3, SP-7

1.03 SUBMITTALS

A. Submittals shall be furnished in accordance with Section 01 3300 – Submittal Procedures.

B. As required by the Specifications, submit for review completely detailed and certified shop and erection drawings of the miscellaneous metal work. All Coatings or other protection

against corrosion to be applied at the shop or in the field shall be indicated on these drawings. The shop drawings for aluminum work shall show the alloys and tempers to be used, and the finish, if any to be applied.

C. Shop drawings, giving complete information necessary for fabrication, layout and installation of metal work shall be submitted to the ENGINEER for review prior to fabrication.

D. Preparation of shop drawings for fabricated metal items shall be coordinated with the manufacturers, of various equipment in order to comply with details, locations, openings, and arrangements required by the manufacturers, of various equipment in order to comply with details, locations, openings, and arrangements, required by the manufacturers.

E. Field measurements shall be made to verify all dimensions in the field, which may affect installation of work before shop drawings are made and/or fabrication is performed.

1.04 QUALITY ASSURANCE

A. The design, detail and workmanship of steel plates and structural steel shall conform to the AISC Specification for the Design, Fabrication and Erection of Structural Steel for Buildings.

B. Where welding is permitted or required, it shall conform to the current requirements of the American Welding Society for the type of work in question.

C. Aluminum work shall be fabricated in a shop where the quality of work is in accordance with the highest standards for work of this type. All work shall be executed by mechanics skilled in the fabrication of aluminum, and shall be true to detail with sharp, clean profiles, fitted with proper joints and intersections and with finishes as specified.

D. All miscellaneous metal work shall be formed to shape and size with sharp lines and angles. Shearing and punching shall leave clean true lines and surfaces.

1.05 RESPONSIBILITY FOR DIMENSIONS

A. The general design and dimensions of the miscellaneous metal work are indicated on the Drawings, correctness of the details and dimensions of the finished articles is required. Verification of conditions at the job before fabrication and coordination of the work with that of all other trades to prevent interference.

PART 2 - PRODUCTS

2.01 MATERIALS

A. Steel plated and structural steel shapes shall conform to ASTM Standard Specification for Structural Steel, Designation A36.

B. Sheet steel shall be cold rolled or hot rolled carbon sheet steel conforming to ASTM Standard Specification for Steel, Carbon, Cold Rolled Sheet, Commercial Quality, Designation A36 or AST ASTM Standard Specification for Steel, Carbon (0.15 maximum, percent), Hot Rolled Sheet and Strip, Commercial Quality, Designation A569, as appropriate.

C. Steel pipe shall conform to ASTM Standard Specifications for Pipe, Steel, Black and Hot Dipped, Zinc Coated, Welded and Seamless, Designation A53.

D. Stainless steel shall be Type 304 unless otherwise indicated or specified in the Contract Documents.

E. Aluminum work shall be fabricated of plates, rolled, or extruded shapes, sheets or casting conforming (unless otherwise permitted or indicated) to the following alloy and temper designations of the Aluminum Association:

1. Structural rolled or extruded shapes 6061-T6.
2. Extruded shapes 6063-T5.
3. Plates 6061-T6.
4. Gratings (bearing bars) 6061-T6 (crimp bars) 6063-T6.
5. Castings 214.
6. Sheets 3003-F.
7. Bolts and nuts 2024-T4.
8. Pipe Railing 6063-T6.

2.02 STEEL

A. Structural steel shall conform to the requirements of ASTM A36. Structural tubing, where used, shall conform to the requirements of ASTM A500, Grade B, and the ends of the tubing shall be properly sealed to protect the internal surfaces. Steel anchor bolts shall be ASTM A36 hot rolled threaded rod or bar stock, except where stainless steel is indicated on the Drawings.

B. Structural steel members as required shall conform to ASTM Standard shapes.

C. Base and bearing plates shall be provided where necessary to provide maximum bearing value of not more than 200 psi on solid concrete masonry units not more than 750 psi on concrete and shall be grouted in place.

D. Steel lintels shall be provided for all square head openings in masonry where shown and where other lintels are not indicated on the Drawings. Lengths of bearing at each end of lintels shall be not less than 1 inch per foot of span, but in no case less than 8 inches shall be increased or the lintels shall be fitted with bearing plates as required to provide unit pressures in pounds per square inch of not more than 200 on solid concrete masonry units and 625 on concrete. All new steel lintels shall be shop primed and ready to receive coatings as specified under Section 09 9100 – Painting. Finish coats are specified in Section 09 9700 – Special Coatings.

2.03 GALVANIZING

A. Items of miscellaneous iron work and steel work indicated on the Drawings or specified to be galvanized shall be zinc coated by the hot dip process in conformity with ASTM Standard Specification for Zinc (hot galvanized) Coatings on Products Fabricated from Rolled, Pressed, and Forged Steel Shapes, Plates, Bars, and Strip, Designation A123-78; or ASTM Standard Specifications for Zinc Coating (hot-dip) on Iron and Steel Hardware, Designation A153-78, as appropriate. Galvanizing is specified under Article 3.04, "Hot-Dip Galvanizing."

2.04 ALUMINUM

A. All structural and miscellaneous aluminum shall be Alloy 6061 (Alloy 6063 for extrusions), Temper T6, unless otherwise noted, indicated, or accepted by the OWNER. Where welding is necessary in fabrication, is shall be done in conformance with Section 7 "Welded Construction" of Specification for Aluminum Structures, referenced hereinbefore.

2.05 ALUMINUM WORK PROTECTION

A. Aluminum surfaces which after erection would otherwise be in contact with concrete or brick masonry or with mortar, shall be protected from contact therewith by a coat of bitumastic super service black manufactured by the Koppers Company, Inc. Pittsburgh, PA; Tarmastic 100 manufactured by Porter Coating Division, Porter Paint Company, North Kansas City, MO; or ENGINEER-approved equal. Areas where the paint has been damaged by abrasion or other cause shall be cleaned and repainted as directed so that the aluminum will have a complete protective paint film when brought into contact with the material against which it is being protected. Before application of coating, the surface shall

be cleaned of all dirt, heavy deposits of grease or oil and other foreign substances and shall be immersed in or swabbed with an acceptable solvent. Next the surfaces shall be rinsed with clear water and thoroughly dried.

B. Attention of the Specifications in regard to protection against electrolysis where aluminum is to be used in conjunction with dissimilar metals is required.

C. Where a shop coating of methacrylate lacquer has been specified on aluminum work to protect the surface from stain, the protective coating of lacquer worn off during handling or erection shall be replaced in the field by a new coating of lacquer of the same type.

D. During construction, care shall be taken to prevent damage to the aluminum work from splashing or the accumulation of paint, concrete, mortar, or other similar materials.

2.06 STAINLESS STEEL

A. Stainless steel shapes shall be ANSI Type 304 or 316 in accordance with ASTM A276. Miscellaneous bar stock products such as pipe straps shall be 300 Series stainless steel. Anchor bolts, nuts and washers shall be ANSI Series 300 stainless steel.

2.07 FASTENERS

A. Bolts, Nuts and Washers:
   1. Structural bolts shall be ANSI Type 300 Series stainless steel in accordance with ASTM F593, with ASTM F594 nuts. All bolts shall have hexagonal heads.
   2. Anchors and bolts including nuts and washers shall be provided where necessary for securing the work in place. Sizes, types and spacings of anchors and bolts not indicated or specified otherwise shall be as necessary for their purposes. Anchor bolts and anchors for the erection of structural steel shall be shall be stainless steel Type 316.
   3. Bolts and nuts shall be installed with anti-seize per Loctite, or ENGINEER-approved equal (or thread locker to be confirmed with WWTP Operations).

B. Expansion Anchors (In Concrete):
   1. Expansion anchors shall be of three (3) types:
      a. Stainless steel wedge type.
      b. Self-drilling plated type with stainless steel bolt and stainless-steel washer.
      c. Type of expansion anchor desired shall be noted on Drawings.
   2. Stainless steel wedge type anchors shall be ITW Ramset/Red Head or ENGINEER-approved equal of Type 316 stainless steel. Anchors shall meet or exceed latest Government GSA Federal Specifications FF-S-325, Group II, Type 4, Class 1. Anchor shall be used with 300 series stainless steel bolt and washer.
   3. Self-drilling plated anchors shall be ITW Ramset/Red Head of ENGINEER-approved equal. Anchors shall meet or exceed latest Government GSA Federal Specification FF-S-325, Group III, Type 1. Self-drilling anchors shall be electro-deposited zinc plated and chromate dipped, to meet or exceed the requirements of the latest Federal Specification QQ-Z-325, Type II, Class 3. Cutting teeth shall have minimum hardness of 82 Rockwell A scale.
   4. Steel expansion anchors shall be installed in accordance with manufacturer's recommendations.
   5. Self-drilling expansion anchors shall be installed in accordance with manufacturer's recommendations. To insure full development strength, all self-drilling expansion anchors shall be expanded over the plug in the final set, by using a bolt screwed into the female threads and impacted by hand with a suitable hammer. The final set shall not be accomplished by using the drilling tool.

6. After installation, pull-out tests by the anchor manufacturer's representative may be requested by the ENGINEER. If so, the ENGINEER will specify the number and location of the tests.

2.08 MISCELLANEOUS ITEMS

A. Items of miscellaneous metal work not particularly specified hereinafter shall be of the shape, size, materials, and details indicated on the Drawings or suitable for the purpose intended.

2.09 LOOSE LINTELS

A. Furnish all loose lintels as indicated on the Drawings or required by the Work. The loose lintels shall be fabricated from structural steel shapes and plates. All loose lintels shall be shop primed and ready to receive coatings as specified in the applicable Sections of Division 09 – Finishes.

2.10 SLEEVES AND INSERTS

A. Attention is directed to the requirements of the Specifications regarding sleeves and inserts.

2.11 ALUMINUM PIPE RAILING

A. The aluminum pipe railing shall be the product of company normally engaged in the manufacture of pipe railing. Railing shall be shop assembled in lengths not to exceed 24 feet for field erection.

B. Handrails and stair rails shall be designed to withstand a 200-pound concentrated load applied in any direction at any point on the top rail. Handrails and stair rails shall also be designed to withstand a load of 50 pounds per foot applied horizontally to the top rail. The 200-pound load will not be applied simultaneously with the 50-pounds-per-foot load. In addition, the handrails shall be designed to withstand a load of 100 pounds per foot horizontal load. The 100-pounds-per-foot vertical load does not apply to stair rails.

C. The manufacturer shall submit calculations to the ENGINEER for approval. Testing of base castings or base extrusions by an independent lab or manufacturer’s lab (if manufacturer’s lab meets the requirements of the Aluminum Association) will be an acceptable substitute for calculations. Calculations will be required for approval of all other design aspects.

D. Post spacing shall be a maximum of 8 feet 0 inches, unless noted otherwise. Posts and railings shall be a minimum of 1½ inches Schedule 40 aluminum pipe alloy 6063-T6, ASTM B429 or ASTM B221. The handrail manufacturer shall show that their posts are of adequate strength, the manufacturer may reduce the post spacing or add reinforcing dowels or may do both in order to meeting loading requirements.

E. The handrail shall be made of pipes joined together with component fittings. Samples of all components, bases, toe plate and pipe must be submitted for approval. Components that are glued at the joints will not be acceptable. Handrail and components shall be Kee Clamp, Inc., Golden Railings, Speed-Rail, or ENGINEER-approved equal.

F. Posts shall not interrupt the continuation of the top rail at any point along the railing, including corners and end terminators.

G. The midrail at a corner return shall be able to withstand a 200-pound load without loosening.

H. Expansion bolts shall be spaced 10 diameters apart and 5-diameter edge distance for not reduction in pullout strength. A safety factor of four shall be used on expansion bolt pullout values published by the manufacturer.

I. Toe plate shall conform to OSHA Standards. Toe plate shall be a minimum of 4 inches high and shall be an extrusion that attaches to the posts with clamps, which allow for expansions and contraction between posts. Toe plates shall be set ¼-inch above the walking surface. Toe plates shall be provided on handrails as required by OSHA and/or as shown on Drawings. Toe plates shall be shipped loose in stock lengths with pre-manufactured corners for field installation.

J. Openings in the railing shall be guarded by a self-closing gate. Safety chains shall not be used unless specifically shown on the Drawings.

K. Finish shall be Aluminum Association M10-C22-A41 (215-R1). The pipe shall be plastic wrapped. The plastic wrap is to be removed after erection.

L. Aluminum surfaces in contact with concrete, grout or dissimilar metals will be protected with a coat of bituminous paint, (two (2) coats of Federal Specification TT-V51F Asphalt Varnish), mylar isolators, or other approved material.

2.12 PLATE COVERS AND FRAMES

A. The plate covers and frames shall be the sizes indicated on the Drawings. The frames shall be aluminum angles of the sizes indicated with welded strap anchors for securing the frames in the concrete. The frames shall have mitered corners with welded joints ground smooth where exposed.

B. The covers shall be ¼-inch thick aluminum tread plate having an acceptable nonskid surface and reinforced with aluminum bars welded to the underside of the cover in accordance with the details. Plate covers shall be capable of supporting a uniform superimposed load of 100 psf for the span with a deflection of less than ¼-inch based on allowable fiber stress of 16,000 psi. The covers shall be made to fit neatly and accurately in the frames.

C. Hinged covers shall be furnished with heavy-duty stainless steel, plain bearing hinges with stainless steel pins. The hinges shall be fastened to the covers and frames with stainless steel machine screws. The hinged covers shall be provided with flush lift handles fabricated from ½-inch diameter aluminum rod, alloy 6061-T6511.

D. A single leaf of hinged plate covers shall be no greater than 3 feet x 5 feet in size.

E. Removable plate covers shall have 1-inch diameters finger holes to facilitate removal. All edges of holes cut in the plate covers shall be ground smooth.

F. Removable plate covers shall be no greater than 14 square feet in size with the longer dimension no greater than 7 feet.

G. Gasket plate covers shall have continuous compressible neoprene seals between the cover and the frame at the perimeter. The covers shall be secured to the frames with countersunk, flathead, stainless steel machine screws spaced approximately 6 inches on centers.

2.13 GUARD CHAINS

A. Removable guard chains at openings in aluminum pipe railings shall be fabricated from wrought, non-welded aluminum chain having 12 links per foot. The chains shall be secured to aluminum eyes bolted or welded to pipe stanchion at one end of the opening. The free ends of the chains shall be provided with hooks formed from ¼-inch diameter solid aluminum rod for attaching to similar eyes in the pipe stanchion at the opposite end of the opening.

2.14 CAST IRON WHEEL GUARDS

A. Wheel guards where indicated on the Drawings shall be cast iron guards of the sizes and types indicated on the Drawings as herein specified and shall be manufactured by Neenah Foundry Company, Neenah, WI; Flockhart Foundry Company, Neward, NJ; McKinley Iron Work, Fort Worth, TX or ENGINEER-approved equal. Wheel guards shall be given one shop coat of rust inhibitive paint before shipment.

B. Wheel guards shall be heavy-duty concrete fill type, cast iron wheel guards, No., R-4983-C manufactured by Neenah Foundry Company Type 706A manufactured by Flockhart Foundry Company or ENGINEER-approved equal. The guards shall be set 2 inches into the pavement and shall be bolted to the masonry walls. The guards shall be filled with Class A concrete and the top of the fill sloped at a 15-degree angle from the building.

2.15 CAST ALUMINUM NOSINGS

A. The cast aluminum nosing shall be abrasive cast aluminum nosing securely fastened with stainless steel, flat head bolts and wing anchors set into the fresh concrete. The nosings shall be the products of Wooster Products, Inc., Wooster, OH; American Abrasive Metals Company, Irvington, NJ; Andco Building Specialties or ENGINEER-approved equal.

2.16 ACCESS DOORS

A. Doors shall be flush panel access doors as manufactured Inryco, Inc., Milwaukee, WI; Karp Associates, Inc., Maspeth, NY; BOICO, Birmingham, AL or ENGINEER-approved equal. Doors and frames to be steel with concealed hinge and flush screwdriver operated locks.

2.17 CASTINGS

A. All miscellaneous iron castings shall be of best quality materials free from flaws and unsightly defects. Gray cast iron shall be ASTM A48 Class 35 (35,000 psi tensile strength). Furnish and install in the locations indicated casting of the type and size shown on the Drawings.

2.18 CARPENTERS IRON WORK

A. Furnish bent or otherwise custom fabricated bolts, plates, anchors, hangers, dowels and other miscellaneous steel and iron shapes as required for framing and supporting woodwork and for anchoring or securing woodwork to concrete or other structures. Manufacture or fabricate items of sizes, shapes and dimensions required. Furnish malleable iron washers for head and nuts which bear on wood structural connections, elsewhere, furnish steel washers.

2.19 MISCELLANEOUS FRAMING AND SUPPORTS

A. Provide miscellaneous steel framing and supports as required to complete the work. Fabricate miscellaneous units to the sizes, shapes and profiles shown or if not shown, of the required dimensions to receive adjacent grating plates, louvers, vents, grilles, screens, or other work to be retained by the framing. Except as otherwise shown, fabricate from structural steel shapes and plates and steel bars of all welded construction using mitered corners, welded brackets and splice plates and a minimum number of joints for filed connection. Cut, drill, and tap units to receive hardware and similar items to be anchored to the work.

2.20 SHOP PAINTING

A. Painting of miscellaneous ferrous metal work is specified in the applicable Sections of Division 09 – Finishes.

PART 3 - EXECUTION

3.01 ANCHORAGE ITEMS

A. Furnish all bolts, nuts, shims, pins, screws, nails, and other anchors, which, may be required by the Drawings or job conditions to secure all items permanently in place whether or not specifically called for or shown on the Drawings.

3.02 FABRICATION AND INSTALLATION OF METAL WORK

A. General: All metal items shall be accurately fabricated and erected with exposed joints close fitting. All joints shall be such of character and so assemble that they will be as strong and rigid as adjoining sections. Joints shall be located where least conspicuous. Items shall have smooth finished surfaces except where otherwise shown or specified.

B. Built-In Items: Members or parts to be built-in with masonry or concrete shall be in a form affording a suitable anchorage or shall be provided with approved anchors, expansion shields or other approved means of securing members.

C. Dissimilar Metals: Ferrous and non-ferrous metals shall be insulated at all contacts with felt washer, mylar strips or sheets, bitumastic paints, or other acceptable means. All aluminum surfaces in contact with concrete shall be coated with two (2) coats of Federal Specification TT-V51F Asphalt Varnish or ENGINEER-approved equal.

D. Connections:
   1. All required anchors, couplings, bolts, and nuts required to support miscellaneous metalwork should be furnished and installed as required.
   2. Weights of connections and accessories shall be adequate to safely sustain and withstand stresses and strains to which they will be normally subjected.
   3. Connections shall be bolted except where welding is called for in the Drawings. Bolts shall be ¾-inch diameter unless noted or required otherwise.

E. Expansions Anchors:
   1. Expansions anchors shall be installed in holes drilled into concrete with carbide tipped drill bits conforming to ANSI B94.12-1977, using a rotary impact hammer for ½-inch and 3/8-inch anchors. Hole depth shall equal or exceed the anchor manufacturer's minimum recommended embedment. Should hole depth equal anchor manufacturer's minimum recommended embedment, hole shall be cleaned out by air pressure. The minimum hole depth shall be per anchor manufacturer's recommendations. Assure hole is perpendicular and conforms in size to anchor manufacturer's recommendation.
   2. Washer and nut shall be assembled on anchor so that the top of the nut is flush with the top of the anchor. Then the anchor shall be driven into the hole through the work until the washer bears against the work. The anchor shall be expanded in accordance with the manufacturer's recommendations.
   3. General: Provide stainless steel fasteners for exterior use or where built into exterior walls. Select fasteners for the type, grade and class required.
   4. Bolts and Buts: Regular hexagon head type, stainless steel, Grade A (within tankage)
   5. Lag Bolts: Stainless steel (within tankage)
   6. Machine Screws: Stainless steel
   7. Wood Screws: Stainless steel
   8. Plain Washers: Stainless steel
   9. Masonry Anchorage Devices: Stainless steel
   10. Toggle Bolts: Stainless steel (within tankage)
   11. Lock Washers: Stainless steel

12. Bolts, buts, lags, toggle bolts and lock washers above and exterior to tankage shall be stainless steel

3.03 WELDING

A. Welding procedures, welders, and welding operators, both for shop and field welding, shall be qualified and certified in accordance with the requirements of AWS D1.1 “Welding in Building Construction” of the American Welding Society. Manufacturer’s and fabricator’s shop drawings shall clearly show complete information and all field welding shall be performed in conformance with this information regarding location, type, size, and length of all welds, all in accordance with AWS A2.0 “Standard Welding Symbols” of the American Welding Society. Special conditions shall be fully explained by notes and details.

3.04 HOT-DIP GALVANIZING

A. All fabrication, galvanizing and repair shall comply with ASTM Standards as they apply in accordance with the publication “ASTM Standard for Materials Hot-Dip Galvanized after Fabrication” issued by American Hot-Dip Galvanizers Association, Inc. In particular, the following specific standards shall apply to work under this contract: ASTM A123, A153, A384, A385, A563 and A780.

B. Items to be galvanized shall be fabricated in accordance with ASTM A385.

C. Galvanizing for fabricated steel items, shall conform to ASTM A123 and shall be done after fabrication. Steel assemblies shall be subject to safeguarding from warpage and distortion during galvanizing per ASTM A384.

D. Upon field erection, any damage measuring more than 1/10-inch wide shall be repaired with a zinc-based solder or zinc-rich paint in accordance with ASTM A780. Marred, damaged, or uncoated areas 4 square inches and less shall be patched with a zinc-based solder to a thickness of 5 milligrams; areas greater than 4 square inches shall be patched with an organic zinc-rich paint to a dry film, Devcon Z, LPS Instant Cold Galvanized or ENGINEER-approved equal. The resident project representative shall determine the extent of damage, which would require recoating.

E. Items subject to distortion during transit, such as thin, curved members, etc., shall be stacked on edge and/or blocked to prevent radius change or other distortion while in transit to and from the galvanizing plant.

3.05 PAINTING

A. Painting of miscellaneous ferrous metal work shall be in accordance with these Specifications.

3.06 MISCELLANEOUS METAL FABRICATIONS

A. Rough Hardware:
   1. Furnish bent or otherwise custom fabricated bolts, plates, anchors, hangers, dowels, and other miscellaneous steel and iron shapes as required for framing and supporting woodwork, and for anchoring or securing woodwork to concrete or other structure. Straight bolts and other stock rough hardware items shall be in accordance with these Specifications.

B. Fabricate items to sizes, shapes and dimensions required. Furnish malleable iron washers for heads and nuts, which bear on wood structural connections; elsewhere, furnish steel washers.

C. Miscellaneous Steel Trim:
   1. Provide shapes and sizes for profiles shown. Except as otherwise indicated, fabricate units from structural steel shapes and plates and steel bars, with continuously welded joints and smooth exposed edges. Use concealed field splices wherever possible. Provide cutouts, fittings and anchorages as required for coordination of assembly and installation with other work.
   2. Galvanize miscellaneous steel trim where indicated.

END OF SECTION

SECTION 05 5100 – METAL STAIRS

PART 1 – GENERAL

1.01 THE REQUIREMENT

A. Furnish and install metal stairs in accordance with the Contract Documents.
   1. Concrete Pan-filled Stairs
   2. Industrial Type Stairs
   3. Safety Tread Stairs
   4. Railing System

1.02 REFERENCES

A. American Concrete Institute (ACI):

117	Standard Specifications for Tolerances for Concrete Construction and Materials
301	Standard Specifications for Structural Concrete

B. American Society for Testing and Materials (ASTM):

A36/A36M	Carbon Structural Steel
A53	Pipe, Steel, Black and Hot-Dipped, Zinc Coated, Welded and Seamless
Al23	Zinc (Hot-Dip Galvanized) Coatings on Iron and Steel Products
A153	Zinc Coating (Hot-Dip) on lion and Steel Hardware
A307	Carbon Steel Bolts and Studs, 60,000 psi Tensile Strength
A500	Cold-Formed Welded and Seamless Carbon Steel Structural Tubing in Rounds and Shapes
A501	Hot-Formed Welded and Seamless Carbon Steel Structural Tubing
A5701 A570M	Structural Steel, Sheet and Strip, Carbon, Hot-Rolled
A611	Steel, Sheet, Carbon, Cold-Rolled, Structural Quality
C33	Concrete Aggregates

C. Steel Structures Painting Council (SSPC):

SP 1	Solvent Cleaning
SP 3	Power Tool Cleaning
SP 10	Near-White Blast Cleaning
SP 11	Power Tool Cleaning to Bare Metal

1.03 SUBMITTAL

A. General: Refer to Section 01 3300 – Submittal Procedures for submittal requirements and procedures.

B. Stair Design: Stairs shall be designed and engineered by the manufacturer, incorporating specified criteria, and employing a professional civil or structural engineer currently registered in the State of Arizona to perform the design engineering. Include design data along with Shop Drawings. Drawings and design data shall be stamped and signed by the manufacturer's professional engineer.

C. Shop Drawings: Submit fully detailed Shop Drawings of metal stairs and railings, showing sizes, details of fabrication and construction, methods of assembly, handrail brackets, locations of hardware, anchors, and accessories, and installation details.

D. Product Data: Submit manufacturer's product data of stair type and corrosion-inhibitive finish system. Include patterned or embossed treads, safety coated treads, railing system, handrails, and handrail brackets.

PART 2 – PRODUCTS

2.01 MANUFACTURERS

A. Type and Manufacture: Provide steel stairs of the following types as indicated:

1. Concrete Pan-Filled Stairs: Steel pan-type stairs with concrete-filled treads and landings, and with treads, risers, and platforms constructed of structural steel sheet. Treads shall have nosings.
2. Industrial Type Stairs: Steel stairs with tread fabricated from checkered or diamond-pattern steel plate or sheet, or with treads fabricated from button-embossed structural steel sheet. Risers shall be closed, fabricated from steel sheet.
3. Safety Tread Stairs: Steel stairs with formed steel treads and platforms, coated with anti-skid safety surface, and closed steel sheet risers.
4. Railing System: All stairs shall be provided with a complete stair railing system, including handrails and handrail brackets at walls, fabricated from steel pipe.

B. Stringers and Supporting Steel:

1. Structural Shapes: Standard structural sections, as indicated, conforming to ASTM A36/A36M.
2. Structural Tubing: Welded or seamless steel tubing, conforming to ASTM A500 or ASTM A501 (minimum yield point of 33,000 psi), of size and shape indicated.

C. Treads and Risers, Platforms and Landings:

1. Steel Sheet: Treads, risers, and platforms shall be fabricated from structural steel sheet, of gauge or thickness indicated, conforming with ASTM A570/A570M or ASTM A611, with minimum yield point of 33,000 psi, faulted as indicated. When gauge is not indicated, provide 14-gauge steel sheet.
2. Patterned Steel Plate: Treads and platforms for industrial-type closed-riser stairs shall be commercial quality checkered or diamond-pattern steel plate or structural steel sheet of thickness indicated, formed to shape and configuration indicated. Risers shall be steel sheet as specified above. Treads and platforms shall be hot-dip galvanized after fabrication in accordance with ASTM Al23.
    a. Button-Embossed Steel Sheet: Treads and platforms may be fabricated from button-embossed structural steel sheet of minimum 12-gauge thickness, with punched circular holes at apex of buttons for nonslip effect, and punched circular holes between buttons for drainage. Buttons shall be spaced 5/8 inch on centers. Drainage holes shall be spaced 1-1/4 inches on centers, eliminating the buttons at these locations. Hole size for button holes shall be 118-inch diameter, plus or minus 1/32 inch. Hole size for drainage holes shall be 1/4-inch diameter, plus or minus 1/16 inch. Treads and platforms shall be hot-dip galvanized after fabrication in accordance with ASTM Al23.
3. Safety Coated Treads: Formed steel sheet coated with anti-skid or nonslip encapsulated aluminum oxide material bonded or fused to the steel surface. Submit product data and sample for approval.

D. Railings and Handrails:

1. Pipe: Pipe for railings, pipe supports, and handrails shall be seamless steel pipe conforming to ASTM A53, Type S, Grade A, with special instructions to the manufacturer to provide Architectural Handrail Grade, of diameters and sizes indicated.

2. Handrail Brackets: Provide handrail brackets for handrails at walls, manufactured specifically for the purpose of cast, forged, or wrought steel, of configuration indicated or required to suit conditions, galvanized after fabrication.

E. Anchors, Fasteners, and Accessories: Provide all required anchors, fasteners, miscellaneous components, and accessories as required for a complete and finished stair installation. Bolts, nuts, and washers shall conform with ASTM A307, galvanized in accordance with ASTM A153.

1. Expansion Bolts: Where anchors are not cast into the concrete construction, provide galvanized expansion type anchors with matching galvanized steel bolts or studs with nuts, of sizes as indicated or required. Provide washers under all bolt heads and nuts. Expansion bolts require approval of the Engineer before they may be installed in post-tensioned slabs. Expansion bolts will not be permitted for use on concrete curbs or along the edge of concrete or a concrete joint.

F. Paint: Corrosion-inhibitive protective primer as specified in Article 2.04 herein.

G. Grout: As per these Specifications.

2.02 FABRICATION

A. Metal stairs and railings shall be fabricated by firms or shops experienced and skilled in the construction of metal stairs and architectural railings. There shall be no exposed screws, bolts, and fasteners in the finished work.

B. For items bearing on concrete, provide steel bearing plates and anchors as indicated or required. Base or bearing plates shall be leveled by means of adjustment nuts. The space below plates shall be packed solid with full bed of non-shrink grout. Templates shall be furnished, together with instructions for setting of anchors, anchor bolts, and bearing plates. The Contractor shall supervise and ensure that anchors and related items are properly set in concrete during the progress of the work.

C. Welding shall be performed in the shop, unless otherwise indicated. Welds where exposed to view shall be ground down and dressed smooth, so that the shape and profile of the item welded are maintained.

D. Holes shall be cut, drilled, or punched at right angles to the surface of the metal and shall not be made or enlarged by burning. Holes in base or bearing plates shall be drilled. Holes shall be provided in members as required to permit connecting the work of other trades.

E. Metal stairs and railings shall be prefabricated and preassembled in the factory or shop as far as practicable.

2.03 GALVANIZING

A. Where certain components are indicated to be galvanized, comply with galvanizing requirements of these Specifications.

2.04 CLEANING AND PAINTING

A. All surfaces of metal stairs and railings, including surfaces of pan-filled stairs, shall be cleaned and treated to assure maximum paint adherence, prior to application of the shop prime coat, in accordance with SSPC-SP 1, SSPC-SP 3, SSPC-SP 10, and SSPC-SP 11 as applicable for the exposure and application.

B. Ferrous metalwork shall be given a shop coat of rust-inhibitive metal primer as specified in these Specifications, or other ENGINEER-approved rust-inhibitive metal primer standard with the stair manufacturer. All surfaces of stairwork and railings shall be spray-painted.

C. Where galvanized surfaces are indicated to be painted, comply with cleaning and painting requirements of these Specifications.

E. Coordinate with these Specifications, for compatibility of the prime coat and finish coat of paint.

2.05 CONCRETE

A. Concrete for pan-filled stair treads and landings shall be concrete, weighing not less than 120 pounds per cubic foot, with a minimum compressive strength at 28 days of 4,000 psi. Maximum aggregate size shall be 3/8 inch (ASTM C33, Size No. 8). Include a mix of aluminum oxide and silicone carbide grit particles as required to produce non-slip tread surfaces

PART 3 – EXECUTION

3.01 INSTALLATION

A. Stairs and railings shall be installed by the manufacturer or its authorized representative as indicated and in accordance with the approved Shop Drawings and the manufacturer's installation instructions. Stairs and railings shall be installed with all accessories furnished by the manufacturer or fabricator as required for complete and finished stair installations.

B. Installation of stair work shall be true and horizontal or perpendicular as the case may be, level and square, with angles and edges parallel with related lines of the building or structure.

C. Shop fabricated items subject to damage shall be braced and carefully handled to prevent distortions or other damage.

D. Field welding, where required, shall conform with requirements specified for shop fabrication.

E. Bearing plates shall be supported at the proper level by means of adjustment nuts on anchor bolts. Bases and plates shall be set accurately using a high-strength, non-shrink grouting mortar to obtain uniform bearing.

3.02 FIELD PAINTING

A. After installation, exposed painted surfaces, field welds, and other abraded or damaged primed surfaces shall be touched up with an additional coat of the same primer for ferrous surfaces as herein before specified for shop painting. Spray paint all touch-up work.

B. Finish field painting is specified in Sections 09 9700 – Special Coatings, and 09 9100 – Painting.

3.03 CONCRETE WORK

A. Concrete for pan-filled stairs shall be placed, compacted, finished, and cured in accordance with applicable requirements of ACI 301.

B. Treads and landings shall receive a "troweled finish" in combination with a "nonslip finish" with "very flat" tolerances as specified in ACI 301 and ACI 117.

END OF SECTION

SECTION 05 5133 – METAL LADDERS

PART 1 - GENERAL

1.01 THE REQUIREMENT

A. Furnish and install handrails in accordance with the Contract Documents.

B. Related Sections: Section 05 50 00 – Metal Fabrications.

1.02 SUBMITTALS

A. Submittals shall be furnished in accordance with Section 01 33 00 – Submittal Procedures.
   1. Detail fabrication and erection of each ladder indicated. Include plans, elevations, sections, and details of metal fabrications and their connections.
   2. Provide templates for anchors and bolts specified for installation under other Sections.
   3. Provide reaction loads for each hanger and bracket.

B. Qualification Data:
   1. Refer to Quality Assurance provisions for submittal requirements evidencing experience, certifications and resources.

1.03 QUALITY ASSURANCE

A. Manufacturer Qualifications: A firm experienced in producing aluminum metal ladders similar to those indicated for this Project.
   1. Record of successful in-service performance.
   2. Sufficient production capacity to produce required units.
   3. Professional engineering competent in design and structural analysis to fabricate ladders in compliance with industry standards and local codes.

B. Installer Qualifications: Competent and experienced firm capable of selecting fasteners and installing ladders to attain designed operational and structural performance.

C. Product Qualification: Product design shall comply with OSHA 1910.27 minimum standards for ladders.

1.04 PROJECT CONDITIONS

A. Field Measurements: Verify dimensions by field measurement before fabrication.
   1. Established Dimensions: Where field measurements cannot be made without delaying the Work, indicate established dimensions on shop drawing submittal and proceed with fabrication.

1.05 WARRANTY

A. Manufacturer has responsibility for an extended Corrective Period for work of this Section for a period of 5 years commencing on the shipment date of the product against all the conditions indicated below, and when notified in writing from Owner, manufacturer shall promptly and without inconvenience and cost to Owner correct said deficiencies.
   1. Defects in materials and workmanship.
   2. Deterioration of material and surface performance below minimum OSHA standards as certified by independent third party testing laboratory. Ordinary wear and tear, unusual abuse or neglect excepted.
   3. Within the warranty period, the manufacturer shall, at its option, repair, replace, or refund the purchase price of defective ladder.

B. Manufacturer shall be notified immediately of defective products, and be given a reasonable opportunity to inspect the goods prior to return. Manufacturer will not assume responsibility, or compensation, for unauthorized repairs or labor. Manufacturer makes no other warranty, expressed or implied, to the merchantability, fitness for a particular purpose, design, sale, installation, or use, of the ladder; and shall not be liable for incidental or consequential damages, losses of or expenses, resulting from the use of ladder products.

PART 2 - PRODUCTS

2.01 MANUFACTURERS

A. Okeeffe's, or equal.

2.02 LADDERS

A. Fixed and Cage Ladder Design:
   1. Safety cages are required on ladders over 24 feet
   2. Safety cages are required on all ladders in high or hazardous areas.
   3. Landing platforms are required at 50 feet above the bottom of the ladder.
   4. Rail and harness fall arrest system as alternate to safety cage and landing platforms shall be a permissible manufacturer's option.
      a. Fixed Ladder Bottom Bracket:
      b. Bottom floor supported bracket.
      c. Bottom wall supported bracket.
      d. Bracket as drawn.

B. Fixed Access Ladder:
   1. Heavy Duty Tubular Rail.
      a. Model 501 as manufactured by O'Keeffe's, or equal
   2. Tubular Rail Low Parapet Access Ladder with Roofover Rail Extension.
      a. Model 502 as manufactured by O'Keeffe's, or equal
   3. Tubular Rail Low Parapet Access Ladder with Platform and Return.
      a. Model 503 as manufactured by O'Keeffe's, or equal

C. Cage Ladder:
   1. Cage Ladder with Roof Hatch Rail Extension.
      a. Model 531 as manufactured by O'Keeffe's, or equal
   2. Cage Ladder with High Parapet Access, Platform and Return.
      a. Model 533 as manufactured by O'Keeffe's, or equal

D. Ship Ladder:
   1. Ships Ladder.
      a. Model 520 or 520A as manufactured by O'Keeffe's, or equal
   2. Ship Ladder with Platform.
      a. Model 521 or 521A as manufactured by O'Keeffe's, or equal
   3. Incline:
      a. 60 degree.
      b. 75 degree.
      c. As drawn.

2.03 FINISHES

A. Paint. Urethane over chemically pretreated substrate.
   1. Caution Yellow (RAL 1018).
   2. As scheduled on drawings.

2.04 MATERIALS

A. Aluminum Sheet: Alloy 5005-H34 to comply with ASTM B209.

B. Aluminum Extrusions: Alloy 6063-T6 to comply with ASTM B221.

2.05 FABRICATION

A. Rungs: Not less than 1-1/4 inches in section and 18–3/8 inches long, formed from tubular aluminum extrusions. Squared and deeply serrated on all sides.
   1. Rungs shall withstand a 1,500 pound load without deformation or failure.

B. Channel Side Rails: Not less than 1/8 inch wall thickness by 3 inches wide.

C. Heavy Duty Tubular Side Rails: Assembled from two interlocking aluminum extrusions no less than 1/8 inch wall thickness by 3 inches wide. Construction shall be self-locking stainless steel fasteners, full penetration TIG welds and clean, smooth and burr-free surfaces.

D. Ship Ladders: Not less than 1-1/4 inches high, 4-1/8 inches deep, and 2 feet wide; tread spacing shall be 1 foot on center. Handrails shall be aluminum pipe, not less than 1-1/2 inches in diameter with hemispheric end caps.

E. Walk-Through Rail and Roof Rail Extension: Not less than 3 feet 6 inches above the landing and shall be fitted with deeply serrated, square, tubular grab rails.

F. Landing Platform: 1-1/2 inches or greater diameter, tubular aluminum guardrails and decks of serrated aluminum treads.

G. Security Doors: Formed 1/8 inch thick aluminum sheet. Security panels shall extend on both sides, perpendicular to the door face, to within 2 inches of the wall. Security door shall be furnished with continuous aluminum piano hinge and heavy duty forged steel locking hasps.

H. Ship Ladder Seismic Bottom Support: Manufacturer’s standard; two isolation bearings per stringer.

I. Ladder Safety Post: Retractable hand hold and tie off.

J. Rail and Harness Fall Arrest System: Supplied where specified as alternate to safety cage and landing platforms, in accordance with OSHA regulation 1910.27; permanently mounted to ladder rungs and complete with necessary components.

K. Safety Cages:
   1. Fabricate ladder safety cages to comply with authority having jurisdiction. Assemble by welding. Spacing of primary hoops, secondary hoops and vertical bars shall not exceed that required by code.
   2. Safety cage hoops and vertical bars: 3/16 inch by 2 inches aluminum bar.

PART 3 – EXECUTION

3.01 EXAMINATION

A. Coordinate anchorages. Furnish setting drawings, templates, and anchorage structural loads for fastener resistance.

B. Do not begin installation until supporting structure is complete and ladder installation will not interfere with supporting structure work.

C. If supporting structure is the responsibility of another installer, notify Architect of unsatisfactory supporting work before proceeding.

3.02 INSTALLATION

A. Install in accordance with manufacturer's instructions, and in proper relationship with adjacent construction.

3.03 PROTECTION

A. Protect installed products until completion of project.

B. Touch-up, repair or replace damaged products before Substantial Completion.

END OF SECTION

SECTION 05 5213 – PIPE AND TUBE RAILINGS

PART 1 - GENERAL

1.01 THE REQUIREMENT

A. Furnish and install handrails in accordance with these Specifications and Contract Documents.

1.02 SUBMITTALS

A. Submittals shall be furnished in accordance with Section 01 3300 – Submittal Procedures.

PART 2 - PRODUCTS

2.01 MATERIALS

A. Rolled Plates and Shapes: ASTM A36

B. Steel Pipe: ASTM A53, Grade B, Type E or S, Schedule 40 unless otherwise noted.

C. Tubing: Cold formed shapes per ASTM A500 or hot-formed shapes per ASTM A501. Wall thickness for either category shall be in accordance with the thickness and tolerances specified in ASTM A501.

D. Bolts: ASTM A307, Grade A, with hexagon heads or nuts where exposed in the finish work, with flat heads for countersinking where flush bolting is specified or required.

E. Plastic Cover: Polyethylene Thermoplastic (HDPE) tubes having ultra-violet resistance and anti-static properties, nominal thickness 0.250 inches. Color shall be OSHA yellow unless otherwise noted. Size covers for pipe diameters.

F. Grout: Non-shrink, nonmetallic type per CE CRD-621 and ASTM C1107. Grout shall be premixed and factory-packaged. Formulation shall be non-staining, noncorrosive, nongaseous properties. Provide grout as recommended by grout manufacturer for interior or exterior application.

G. Anchor Bolts:
   1. Expansion Anchors: Threaded stud type with two independent expansion anchor wedges per Fed. Spec. FF-S-325, Group II, Type 4, Class 1 for concrete expansion anchors. Stud, wedges, washer, and nut shall be zinc-plated steel.
   2. Adhesive Anchor System: Self-contained glass vial containing pre-measured amounts of quartz sand, hardening agent, and polyester resin. Studs shall be threaded rod conforming to ASTM A307 with compatible washers and hexagon nuts furnished by the anchor manufacturer.

H. Concrete: Provide 3,000 psi, 28-day strength concrete unless noted otherwise. ASTM C94, slump of 4 inches ± 1 percent.
   1. Exterior Concrete: Include air-entrainment or 6 percent ± 1 percent.
   2. Cement: ASTM C150, Type 1.
   3. Aggregates: ASTM C33 normal weight, natural coarse aggregate, maximum ¾" diameter.
   4. Water: Potable

2.02 HAND RAIL SYSTEM

A. Structural Performance of Handrails and Railings: Provide handrails and railings capable of withstanding the following structural loads based on 2000 international building code, without exceeding allowable design working stresses of materials for handrails, railings anchors, and connections:
   1. Top Rail of Guards and hand rails: Capable of withstanding the following loads as indicated
      a. Concentrated load of 200 lbf (890 N) applied at any point and in any direction.
      b. Uniform load of 50 lbf/ft: (730 N/m) applied in any direction at the top and to transfer this load through the supports to the structure.
      c. Concentrated and uniform loads above need not be assumed to act concurrently.
   2. Intermediate rails, balusters, and filler panels: Capable of withstanding the following loads applied as indicated:
      a. Applied normal load of 50 pounds (0.22kN) on an area not to exceed 1 square foot including openings and space between rails.
      b. Reactions due to this loading are not required to be superimposed with the proceeding section.

B. Provide Handrail system complying with the following requirements
   1. Sleek system with internal connectors.
      a. Rails and Posts
         1) Extruded Aluminum Pipe ASTM B429, Aluminum alloy 6061-T6. Finish AA M10C22A41. Posts – 1 ½ inch IPS Schedule 80. Rails – 1 ½ inch IPS Schedule 40.
         2) Steel pipe scheduled 40. Posts and rails 1 ¼ inch, with high-density polyethylene thermoplastic coating, nominally 0.125 inch thick.
      b. Mechanical Connectors
         1) Post and handrail connector fittings
         2) Machined from solid aluminum bar stock of alloy 6063-T6 (ASTM B221) or austenitic stainless steel bar stock of alloy 303 (ASTM A582) or machined castings of high tensile aluminum-magnesium alloy 535.0 (ASTM B26) or castings from high purity ingot 535.2 (ASTM B179)
         3) Anodize finish 0.7 mil minimum thickness.
         4) Design – Fittings shall be the type which fastens externally with anodized aluminum, tubular rivet nut with socket head cap screw and stainless steel lock washer. Internal connections by means of an internal double tang, expanded by an internal/external, reverse knurl, cup point, hexagon socket set screw.
      c. Flanges
         1) Sand cast from high tensile aluminum-magnesium alloy 535.0
         2) Supplied with anodize finish – 7-mil minimum thickness.
         3) Design – Fittings shall be the type, which fastens directly to the pipe by means of an internal/external, reverse knurl, cup point, hexagon socket set screw.
         4) All anchoring hardware shall be 300 series stainless steel.
      d. Fasteners
         1) All fasteners to be 302 or 304 stainless steel.

PART 3 - EXECUTION

3.01 INSTALLATION

C. CONTRACTOR shall provide submittals in accordance with Section 01 33 00 -Submittal Procedures showing the layout of the railing where called out in the Contract Documents.

D. Submittal shall indicate where railing shall be cored or plate mounted.

E. Provide 1-inch minimum bearing with maximum erection clearance of ¼-inch all around.

F. Protect all surfaces to be in contact with concrete or dissimilar metals with two (2) coats of Federal Specification TT-V-51F Asphalt Varnish.

END OF SECTION

SECTION 05 5300 – METAL GRATINGS

PART 1 – GENERAL

1.01 THE REQUIREMENT

A. Furnish and install metal bar grating (solid top or open) were shown on the Drawings and in accordance with the Contract Documents.

1.02 REFERENCES

A. Design, fabrication, and installation of grating shall be in accordance with Standard Specifications and Voluntary Code of Practice in Metal Bar Grating Manual, 1979 Edition, published by National Association of Architectural Metal Manufacturers, Chicago, IL (ANSI A-202.1).

B. ASTM B210

C. ASTM B221

D. Federal Specification TT-V-51F

1.03 SUBMITTALS

A. Submittals shall be furnished in accordance with Section 01 3300 – Submittal Procedures.

PART 2 – PRODUCTS

2.01 DESIGN CRITERIA

A. Support minimum uniform live load of 250 psf

B. Deflection not to exceed span of bearing bars (in inches) divided by 240

C. Maximum Fiber Stress: 12,000 psi

2.02 BASIC DESIGN

A. The gratings shall be 2½-inch metal that shall fit into the area shown on the mechanical plan.

B. The gratings shall be secured in place by at least four (4) acceptable removable-type fasteners per grating panel. The ends of each grating section shall be banded with bearing bars.

C. All openings for fixtures or pipes, which require the cutting of three main bars or more, shall be finished in a similar manner as the ends.

D. Gratings in concrete shall have coated aluminum or reinforced fiberglass angle frames with mitered corners and with welded joints ground smooth where exposed. The frames shall have welded anchors and shall be set in the concrete as it is placed.

E. Bearing and cross bars shall be flush at surface.

F. All free and supported bar ends around perimeter and around cutouts shall be banded.

G. Provide removable sections of grating with suitable end bearing where noted on the Drawings or otherwise required.

2.03 MATERIAL

A. Bear Bars: ASTM B221, 6061-T6 or 6063-T6, aluminum

B. Cross Bars: ASTM B221 (extruded) or ASTM B210 (drawn) aluminum

C. Steel Fasteners: Stainless steel, when used with aluminum grating

D. Finish: Aluminum mill finish (as fabricated)

E. Anchors: Stainless Steel Saddle clips of manufacturer's standard design

PART 3 – EXECUTION

3.01 INSTALLATION

A. CONTRACTOR shall provide submittals in accordance with Section 01 33 00 -Submittal Procedures showing the layout of the grating where grating is called out in the Contract Documents:

B. Grating shall be set with full and uniform end bearing to preclude rocking; do not use wedges or shims.

C. Provide 1-inch minimum bearing with maximum erection clearance of ¼-inch all around.

D. Anchor grating with saddle clips in accordance with manufacturer's recommendations or as detailed on the Drawings.

E. Provide cutouts for the passage of pipe, valve and equipment operators, conduit, stems and similar work; cutouts for circular obstructions shall be at least 2 inches larger in diameter than the obstruction.

F. Protect all surfaces of angles and frames to be in contact with concrete or dissimilar metals with two (2) coats of Federal Specification TT-V-51F Asphalt Varnish.

END OF SECTION

SECTION 05 5410 – SAFETY HATCHES

PART 1 -- GENERAL

1.01 THE REQUIREMENT

A. Furnish and install safety hatches in accordance with the Contract Documents.

B. The safety hatches shall be designed to combine covering of the opening, fall through protection per OSHA standard 1910.23 and controlled confine space entry per OSHA standard 1910.146.

1.02 SUBMITTALS

A. Submittals shall be furnished in accordance with Section 01 3300 – Submittal Procedures.

1.03 QUALITY ASSURANCE

A. Warranty: A ten-year warranty protects against defects in materials and workmanship from the date of purchase. Any part that fails in normal use will be furnished at no charge. The warranty is invalid if product is modified, changed, damaged, improperly installed or used in an application for which it is not designed.

PART 2 -- PRODUCTS

2.01 MANUFACTURERS

A. Safety hatch manufacturer shall be:
1. EJ
2. Bilco
3. ENGINEER-approved equal.

2.02 EQUIPMENT

A. Hatches shall be rated for 300 PSF (Pedestrian Rated) at a minimum, unless noted otherwise.

B. Where noted in the Contract Documents, heavy duty H20 traffic rated hatches shall be rated for AASHTO H-20 wheel loads where not subject to high-density traffic. Deflection shall not exceed 1/150th of the span. AASHTO. H-20 requirements dictate a 16,000-lb. load, on a single contact area of 10” x 20”.

C. Where noted in the Contract Documents, extra heavy duty “H30” traffic rated hatches shall have load capacity meeting a proof load of 24,000 lbs. applied to a 9” x 9” contact area. Units not conforming to Proof Load requirement will not be accepted as equal.

D. Each door shall be equipped with a stainless steel hold open arm. Door shall lock open in the 90-degree position. Hold open arm shall be fastened to the frame with a ½-inch grade 316 stainless steel bolt.

E. Covers to be lift assisted must comprise a two piece stainless steel inner and outer tube housing a stainless steel mechanical spring. Covers to rest open at 105˚. H-20 and H-30 rated hatches shall be provided with lift assist mechanism.

F. Angle frame shall be of extruded aluminum with a continuous 1½-inch anchor flange. H-30 frame shall be ductile iron. Exterior of frame (in contact with concrete) shall be supplied with a 3 mil thickness of “Tufcoat 3.5PR” Industrial Coating by Dupont. Application procedure shall be as recommended by Dupont. Isolation coatings shall not be substituted.

G. Hinges shall be of heavy-duty design. Material shall be grade 316 stainless steel. Each hinge shall have a 3/8-inch grade 316 stainless steel pin. Hinges shall be bolted to the

angle frame and diamond plate, with grade 316 stainless steel bolts and ny-lock nuts. Aluminum hinges, or stainless steel hinges not utilizing a 3/8" stainless steel pin shall not be considered equal. Dimensions and quantities for each hatch are provided in the construction plans.

H. Each hatch shall be supplied with a grade 316 stainless steel slam lock, with keyway protected by a threaded aluminum plug. Plug shall be flush with the top of the ¼-inch diamond plate. Slam lock shall be fastened with four grade 316 stainless steel bolts and washers. Slamlocks that fasten with only two grade 316 stainless steel bolts and washers shall not be accepted. Any hinges or cut outs in hatch will be shown in the construction plans.

I. Each hatch shall be equipped with a stainless steel lift handle. The lift handle shall be flush with the top of the ¼-inch diamond plate.

J. The safety grate shall be made of 6061-T6 aluminum and designed per the most current and published edition of "Specifications for Aluminum Structures," by the Aluminum Association, Inc., for "Bridge Type Structures.

K. Where noted in the Contract Documents, for heavy duty hatches, grating shall be designed to withstand an H-20 or H-30 wheel load per AASHTO specifications. Safety Hatch type systems that utilize the H-20/H-30 reinforcement on the cover, and supplied with a 300 PSF (pedestrian rated) grate, as well as a safety net system shall not be acceptable.

L. Grate openings shall allow for visual inspection, limited maintenance, and float adjustments while the safety grate fall through protection is left in place.

M. Design must assure that the fall through protection is in place before the doors can be closed, thereby protecting the next operator.

N. Each grate shall be provided with a separate hold open arm, which will lock the grate in the 90-degree position once opened.

O. Each grate supplied with a locking device (for owner's padlock) that will prevent unauthorized entry to the confined space. The grating system will allow anyone to make visual inspection and float adjustments without entering the confined space.

P. Grate shall be coated with an OSHA type safety orange color, promoting visual awareness of the hazard. The aluminum safety grates shall receive a two-coat powder coat system, applied by the electrostatic spray process. The base coat is a thermosetting epoxy powder coat finish with a minimum thickness of 2 - 4 mils. The top coat is a mar-resistant, TGIC polyester powder coating with a minimum thickness of 2 - 4 mils. Each coat shall be baked at 350°F - 375°F until cured.

Q. Welding shall be in accordance with ANSI/AWS D1.2-90 Structural Welding Code for Aluminum.

2.03 MATERIAL SPECIFICATIONS

A. Aluminum material shall be 6061-T6 aluminum for bars, angles, and extrusions ¼-inch diamond plate shall be 5086 aluminum.

B. H-30 frame and cover shall be manufactured from ductile iron conforming to the requirements of ASTM-A536, and AASHTO M105 and M306. Gray Iron/Gray Cast Iron shall not be accepted as equal.

PART 3 – EXECUTION (NOT USED)

END OF SECTION

SECTION 06 1000 – ROUGH CARPENTRY

PART 1 – GENERAL

1.01 THE REQUIREMENT

A. Furnish and install rough carpentry in accordance with the Contract Documents.

1.03 SUBMITTALS

A. Submittals shall be furnished in accordance with Section 01 3300 – Submittal Procedures.

B. Furnish the ENGINEER with a certificate of inspection from the mill supplying dimension lumber stating that the lumber conforms to the graded specified according to standards set by the WWPA. Each piece of lumber shall have an approved WWPA grade identification stamp as identified in the most recently revised and published Grading Rules for Western Lumber. Regardless of grade stamp or certification, each piece of lumber in place in the structure shall be of the original grade specified or better; grade loss resulting from weathering, handling, storage, resaving, or dividing length, may be cause for rejection.

1.04 PRODUCT DELIVERY, STORAGE AND HANDLING

A. Carefully store all lumber delivered to the site off the ground in a manner to assure proper drainage, ventilation, and protection from the weather.

B. General:

1. Lumber: For each use, comply with the “American Softwood Lumber Standard” PS 20 by the U.S. Department of Commerce. Nominal sizes are shown or specified; provide actual sizes complying with the minimum size requirements of PS 20 for the moisture content specified for each use. All lumber to be S-Dry.
2. Plywood: Comply for each use, with the requirements of the U.S. Product Standard PS 1 for “Softwood Plywood/Construction and Industrial,” except as otherwise specified herein. Provide plywood of any PS 1 species classification group, except where particular species is shown or specified or where PS 1 limits groups for particular grade specified.

C. Coordination:

1. Obtain measurements and verify dimensions shown and shop drawing detail before proceeding with carpentry work whenever possible.
2. Correlate location of furring, nailers, blocking, grounds and similar supports so that attached work will comply with design requirements.
3. Fit carpentry work to other work. Scribe and cope as required for accurate fit.
4. Time delivery and installation of carpentry work to avoid delaying other trades whose work is dependent on or affected by the carpentry work and to comply with protection and storage requirements.
5. Examine all parts of the supporting structure and the conditions under which the carpentry work is to be installed, and notify the Architect in writing of any conditions detrimental to the proper and timely completion of the work.
6. Keep carpentry materials dry during delivery. Store lumber and plywood in stacks. Protect bottom of stacks against contact with damp or wet surfaces. Protect exposed materials against weather.
7. Do not store dressed or treated lumber or plywood outdoors.
8. Store materials for which maximum moisture content is specified only in areas where relative humidity has been reduced to a level where specified moisture content can be maintained.

PART 2 – PRODUCTS

2.01 MATERIAL

A. Framing Lumber: All framing lumber shall be of a grade and species per General Structural Notes.

B. Miscellaneous Lumber:
   1. Provide wood for support or attachment of other work such as cant strips, bucks, nailers, blocking, furring, grounds, stripping and similar members. Provide lumber of the sizes shown or specified, worked to shapes shown, and as follows:
   2. Moisture Content: 19% maximum for all lumber items not specified to receive wood preservatives treatment.
   3. Grade: Construction grade light framing size lumber of any species or board size lumber, as required. Provide construction grade boards (WCLIB) or No. 2 boards (WWPA).
   4. Concealed plywood interior standard grade, interior type.
   5. Backing panels for electrical or telephone equipment standard grade interior type plywood with exterior glue.

C. Anchorage and Fastening Materials: Select proper type, size, materials, and finish for each application. Comply with the following:
   1. Nails and staples: FS FF-N-105
   2. Wood Screws: ANSI B.18.6.1
   3. Bolts, hexagon and square: ANSI B.18.2.1
   4. Bolts, round head: ANSI B.18.5
   5. Nuts: FS FF-N-836
   6. Washers: FS FF-W-92
   7. Lag Screws or Lag Bolts: FS FF B-561
   8. Expansion Shields, Expansion Nails and Drive Screw Devices: FS FF-B-561
   9. Toggle Bolts: FS FF-B-588
   10. Bar or Strap Anchors: ASTM A625 zinc coated steel, 18-gauge minimum
   11. Metal Framing Connectors: Teco, Simpson or Kant Sag

D. Wood Preservative Treatment:
   1. Treat wood, including lumber and plywood, as specified herein to be treated, to comply with the applicable requirements of the AWPI.
   2. Pressure treat the following items with water borne preservatives for above-ground use, complying with the AWPB LP2:
   3. Wood cants, nailers, blocking stripping and similar members in connection with roofing, flashing, vapor barriers and waterproofing (except plywood sheathing).
   4. Wood sills, blocking, furring, stripping, and similar concealed members in contact with masonry or concrete or below grade. Foundation Grade redwood, grade marked, is acceptable for wood sills in lieu of treated lumber.

E. Fire Retardant Treatment: For all wood members (required by code) (noted) as fire retardant treated provide pressure impregnation with Dricon fire retardant chemicals in accordance with the recommendations and quality control of Koppers Co., Inc., or ENGINEER-approved equal to provide a UL FRS Fire Hazard Classification. All wood shall be identified with a UL label certifying this classification and the FM diamond.

PART 3 – EXECUTION

3.01 INSTALLATION

A. Use only sound, thoroughly seasoned, well manufactured materials of the longest practical lengths and sizes to minimize jointing.

B. Securely attach carpentry work to substrates by anchoring and fastening as shown and as required by recognized standards. Provide washers under bolt heads and nuts in contact with wood.

C. Nail plywood to comply with APA Recommendations.

D. Set carpentry work accurately to required levels and lines with members plumb and true and accurately cut and fitted.

E. Shim with metal or slate for full bearing on concrete or masonry substrates.

F. Attachment and Anchorage: Use common wire nails, except as otherwise shown or specified herein. Do not wax or lubricate fasteners that depend on friction for holding power. Select fasteners of size that will not penetrate members where opposite side will be exposed to view or will receive finish materials. Make tight connections between members. Install fasteners without splitting wood; pre-drill as required. Do not drive threaded friction type fasteners; turn into place. Tighten bolts and lag screws at installation and retighten as required for tight connections prior to closing in or at completion of work.

3.02 WOOD FRAMING INSTALLATION

A. All framing 16-inch o.c. unless otherwise noted.

B. Cut framing square on bearings, closely fit, accurately set to required lines and levels. Secure rigidly in place at bearings and connections. Do not use shims for leveling on wood or metal bearings. Use steel shims with full bearing on masonry or concrete substrates.

C. Anchor sole plates with ½-inch diameter anchor bolts at 48 inches and 72 inches o.c. embedded at least 7 inches into the concrete or reinforced masonry or 15 inches into unreinforced grouted masonry. There shall be a minimum of two (2) bolts per piece with one (1) bolt located within 12 inches of each end of each piece.

D. Frame members for passage of pipes and ducts to avoid cutting structural members. Do not cut, notch, or bore framing members for passage of pipes or conduits without Architect's permission. Reinforce framing members as directed where damaged by cutting. Provide Simpson NS nail stoppers over utilities that penetrate framing members, nailing with 8d nails.

E. Keep framing 2 inches away from chimneys, 4 inches from fireplace back walls. Firestop concealed spaces in framing not shut off by framing members. Use 2-inch-thick accurately fitted wood blocking to fill opening.

F. Joists and beams to be sizes and spacing as indicated. Set crown edge up with 3½ - ½-inch bearing unless otherwise noted. Toe nail joists to wood sills with nails both sides or with metal connectors. Lap and spike joists over supports. Double joists under all partitions. Double joists and rafters to form headers and trimmers at openings over 4 feet and support with metal joist hangers. Provide 3-inch firecut bevel where built into masonry. Provide blocking or suitable edge support between members as necessary to support edges of sheathing or sub-flooring.

G. Cross bridging is required at joists. Bridging to be 1-inch x 3-inch strips, beveled ends, double crossed, secured with 2 - 8d nails each and nailing bottom ends after sub-flooring is installed. Provide one row at spans to 10 feet, 2 rows at spans of 10 feet to 20 feet. Metal bridging such as Simpson NC is acceptable.

H. All studs 2-inch x 4-inch unless otherwise indicated. Provide double cap plates with joints staggered. Double studs at openings and triple at corners and intersections. Double headers with double trimmers over openings. Set studs directly over joists where possible. Provide blocking and backing as necessary. Provide mid-height blocking at all studs.

I. Provide corner bracing of 1-inch x 4-inch let into studs at exterior walls at close to 45-degree angle. Simpson (WB) (CWB) wall bracing may be used in lieu of wood corner bracing.

3.03 WOOD GROUNDS, NAILERS AND BLOCKING

A. Provide wherever shown and where required for screeding or attachment of other work. Form to shapes as shown and cut as required for true line and level of work to be attached.

B. Coordinate location with other work involved; refer to shop drawings of such work.

C. Attach to substrates securely with anchor bolts and other attachment devices as shown and as required to support applied loading. Countersink bolts and nuts flush with surfaces, unless otherwise shown.

D. Set true to line and level, plumb, with intersections true to required angle. Build into masonry as work progresses, cutting to fit masonry unit size involved. Anchor to formwork before concrete placement.

E. Provide grounds of dressed, preservative treated, key-beveled lumber not less than 1 to 1½-inch wide and of the thickness required to bring face of ground to exact thickness to finish material involved. Remove temporary grounds when no longer required.

3.04 WOOD FURRING

A. Install plumb and level with closure strips at all edges and openings. Shim with wood as required.

END OF SECTION

SECTION 07 2100 – THERMAL INSULATION

PART 1 - GENERAL

1.01 SECTION INCLUDES

A. Board insulation and integral vapor retarder at cavity wall construction, perimeter foundation wall, underside of floor slabs, over roof deck, over roof sheathing, and exterior wall.

B. Batt insulation and vapor retarder in exterior wall, ceiling, and roof construction.

C. Batt insulation for filling perimeter window and door shim spaces and crevices in exterior wall and roof.

1.02 REFERENCE STANDARDS

ASTM C240	Testing Cellular Glass Insulation Block
ASTM C518	Steady-State Thermal Transmission Properties by Means of the Heat Flow Meter Apparatus
ASTM C552	Cellular Glass Thermal Insulation
ASTM C578	Rigid, Cellular Polystyrene Thermal Insulation
ASTM C612	Mineral Fiber Block and Board Thermal Insulation
ASTM C665	Mineral-Fiber Blanket Thermal Insulation for Light Frame Construction and Manufactured Housing
ASTM C1289	Faced Rigid Cellular Polyisocyanurate Thermal Insulation Board
ASTM E84	Surface Burning Characteristics of Building Materials
ASTM E96/E96M	Water Vapor Transmission of Materials
ASTM E136	Behavior of Materials in a Vertical Tube Furnace At 750°C
ASTM E2357	Determining Air Leakage of Air Barrier Assemblies
FM DS 1-28	Wind Design; Factory Mutual Research Corporation
NFPA 285	Evaluation of Fire Propagation Characteristics of Exterior Non-Load-Bearing Wall Assemblies Containing Combustible Components

1.03 SUBMITTALS

A. See Section 01 3300 – Submittal Procedures, for submittal procedures.

B. Product Data: Provide data on product characteristics, performance criteria, and product limitations.

C. Manufacturer's Installation Instructions: Include information on special environmental conditions required for installation and installation techniques.

D. Manufacturer's Certificate: Certify that products meet or exceed specified requirements.

1.04 FIELD CONDITIONS

A. Do not install insulation adhesives when temperature or weather conditions are detrimental to successful installation.

PART 2 - PRODUCTS

2.01 APPLICATIONS

A. Insulation Under Concrete Slabs: Extruded polystyrene board.

B. Insulation at Perimeter of Foundation: Expanded polystyrene board.

C. Insulation Inside Masonry Cavity Walls: Extruded polystyrene board.

D. Insulation Inside Prefabricated Wall Panels: Extruded polystyrene board.

E. Insulation Over Metal Stud Framed Walls, Continuous: Extruded polystyrene board.

F. Insulation on Inside of Concrete and Masonry Exterior Walls: Fiber board.

G. Insulation in Metal Framed Walls: Batt insulation with integral vapor retarder.

H. Insulation in Wood Framed Walls: Batt insulation with separate vapor retarder.

I. Insulation in Wood Framed Ceiling Structure: Batt insulation with separate vapor retarder.

J. Insulation Above Lay-In Acoustical Ceilings: Batt insulation with no vapor retarder.

K. Insulation Over Roof Deck: Polyisocyanurate board.

2.02 FOAM BOARD INSULATION MATERIALS

A. Expanded Polystyrene (EPS) Board Insulation: ASTM C578, Type XI; with the following characteristics:
   1. Flame Spread Index: 25 or less, when tested in accordance with ASTM E84.
   2. Smoke Developed Index: 450 or less, when tested in accordance with ASTM E84.
   3. Complies with fire-resistance requirements shown on the drawings as part of an exterior non-load-bearing exterior wall assembly when tested in accordance with NFPA 285.
   4. Board Size: 48 x 96 inch.
   5. Board Thickness: 1-1/2 inches.
   6. Board Edges: Square.
   7. Water Absorption: 4 percent by volume, maximum.
   8. Board Density: 0.7 lb./cu ft.
   9. Compressive Resistance: 5 psi.
   10. Thermal Resistance: R-value of 3.1 per 1 inch at 75°F mean temperature.
   11. Manufacturers:
      a. AFM Corp
      b. Diversifoam Products
      c. Or ENGINEER-approved equal.

B. Termite-Resistant Expanded Polystyrene (EPS) Board Insulation: Complies with ASTM C578 with the following characteristics:
   1. Flame Spread Index: 25 or less, when tested in accordance with ASTM E84.
   2. Smoke Developed Index: 450 or less, when tested in accordance with ASTM E84.
   3. Board Size: 48 x 96 inches.
   4. Board Thickness: 2-1/2 inches.
   5. Thermal Resistance: R-value of 11, for overall thickness indicated.
   6. Board Edges: Square.
   7. Manufacturers:
      a. Nisus Corporation; Bora Foam
      b. Or ENGINEER-approved equal.

C. Extruded Polystyrene (XPS) Board Insulation: ASTM C578, Type XII; extruded polystyrene board with either natural skin or cut cell surfaces; with the following characteristics:
   1. Flame Spread Index: 25 or less, when tested in accordance with ASTM E84.
   2. Smoke Developed Index: 450 or less, when tested in accordance with ASTM E84.
   3. Complies with fire-resistance requirements shown on the drawings as part of an exterior non-load-bearing exterior wall assembly when tested in accordance with NFPA 285.
   4. Board Size: 48 x 96 inches.
   5. Board Thickness: 1-1/2 inches.
   6. Board Edges: Square.
   7. Thermal Resistance: R-value of 4.6 per 1 inch at 75°F mean temperature.
   8. Compressive Resistance: 15 psi.
   9. Board Density: 1.20 lb./cu ft.
   10. Water Absorption: 0.3 percent by volume, maximum.
   11. Manufacturers:
      a. Dow Chemical Co: www.dow.com.
      b. Pactiv Building Products: greenguard.pactiv.com.
      c. Or ENGINEER-approved equal.

D. Polyisocyanurate Board Insulation with Facers Both Sides: Rigid cellular foam, complying with ASTM C1289; Type I, aluminum foil both faces; Class 1, non-reinforced foam core.
   1. Flame Spread Index: 25 or less, when tested in accordance with ASTM E84.
   2. Smoke Developed Index: 450 or less, when tested in accordance with ASTM E84.
   3. Complies with fire-resistance requirements shown on the drawings as part of an exterior non-load-bearing exterior wall assembly when tested in accordance with NFPA 285.
   4. Compressive Strength: 16 psi
   5. Board Size: 48 x 96 inches.
   6. Board Thickness: 1 inch.
   7. Board Edges: Square.
   8. Manufacturers:
      a. Carlisle Coatings & Waterproofing, Inc; R2+ Matte
      b. Dow Chemical Co
      c. GAF
      d. Hunter Panels, LLC; H-Shield
      e. Hunter Panels, LLC; Xci Class A Foil
      f. Johns Manville; AP Foil-Faced
      g. Rmax Inc.; ECOMAXci
      h. Or ENGINEER-approved equal.

E. Composite Polyisocyanurate Board Insulation Faced with Plywood: Rigid cellular foam, complying with ASTM C1289; Type V, fire-retardant-treated plywood one face, glass fiber mat facer one face, Class 3.
   1. Flame Spread Index: 25 or less, when tested in accordance with ASTM E84.
   2. Smoke Developed Index: 450 or less, when tested in accordance with ASTM E84.
   3. Complies with fire-resistance requirements shown on the drawings as part of an exterior non-load-bearing exterior wall assembly when tested in accordance with NFPA 285.
   4. Compressive Strength: 25 psi
   5. Board Size: 48 x 96 inches.
   6. Plywood Thickness: 5/8-inch.

7. Insulation Board Thickness: 3 inches.
8. Thermal Resistance: R-value of 19.1.
9. Board Edges: Square.
10. Manufacturers:
    a. Hunter Panels, LLC; Xci Ply
    b. Or ENGINEER-approved equal.

F. Composite Ventilated Polyisocyanurate Board Insulation with Wood Spacers and Oriented Strand Board (OSB) or Plywood: Rigid cellular foam with 1-inch wood spacers between foam and OSB or plywood; complying with ASTM C1289, Type II.
1. Top Layer Material: 7/16-inch (11 mm) oriented strand board (OSB).
2. Complies with fire-resistance requirements shown on the drawings as part of an exterior non-load-bearing exterior assembly when tested in accordance with NFPA 285.
3. Compressive Strength: 20 psi
4. Board Size: 48 x 96 inches.
5. Composite Insulation Board Thickness: 6.0 inch.
6. Thermal Resistance: R-value of 28.1.
7. Board Edges: Square.
8. Manufacturers:
    a. Hunter Panels, LLC; Cool-Vent
    b. Or ENGINEER-approved equal.

G. Composite Polyisocyanurate Board Insulation Faced with Oriented Strand Board (OSB) or Plywood: Rigid cellular foam, complying with ASTM C1289; Type V, oriented strand board (OSB) one face, glass fiber mat face one side, Grade 2.
1. Top Layer Material: 7/16-inch (11 mm) oriented strand board (OSB).
2. Complies with fire-resistance requirements shown on the drawings as part of an exterior non-load-bearing exterior wall assembly when tested in accordance with NFPA 285.
3. Compressive Strength: 20 psi
4. Board Size: 48 x 96 inches nominal.
5. Composite Insulation Board Thickness: 4.5 inch.
6. Thermal Resistance: R-value of 25.6.
7. Board Edges: Square.
8. Manufacturers:
    a. Hunter Panels, LLC; H-Shield NB
    b. Or ENGINEER-approved equal.

H. Cellular Glass Board Insulation: ASTM C552, Type IV; cellular glass board, with the following characteristics:
1. Flame Spread Index: 5 or less, when tested in accordance with ASTM E84.
2. Smoke Developed Index: 0, when tested in accordance with ASTM E84.
3. Board Size: 18 x 24 inches
4. Board Thickness: 2 inches
5. Board Edges: Square.
6. Apparent Thermal Conductivity; K value at 0°F: 0.27.
7. Compressive Strength: Minimum 60 psi.
8. Water Absorption: In accordance with ASTM C240, 0.5 percent by volume maximum.
9. Facing: Factory applied skin of aluminum foil on both faces.

2.03 FIBER BOARD INSULATION MATERIALS

A. Where fiber board insulation is indicated, either glass fiber or mineral fiber board insulation may be used, at Contractor's option.

B. Glass Fiber Board Insulation: Rigid glass fiber, ASTM C612.
   1. Facing: None, unfaced.
   2. Flame Spread Index: 25 or less, when tested with facing, if any, in accordance with ASTM E84.
   3. Smoke Developed Index: 50 or less, when tested with facing, if any, in accordance with ASTM E84.
   4. Board Size: 48 x 48 inches
   5. Board Thickness: 1 inch.
   6. Board Edges: Square.
   7. Thermal Conductivity (k factor): 0.26.
   8. Maximum Density: 8.0 lb/cu ft.
   9. Combustibility: Except for facing, if any, non-combustible when tested in accordance with ASTM E136.
   10. Manufacturers:
      a. CertainTeed Corporation
      b. Johns Manville Corporation
      c. Owens Corning Corp
      d. Or ENGINEER-approved equal.

C. Mineral Fiber Board Insulation: Rigid or semi-rigid mineral fiber, ASTM C612 or C553; unfaced flame spread index of 0 (zero) when tested in accordance with ASTM E84.
   1. Where indicated, provide foil facing on one side; with flame spread index of 25 or less, when tested in accordance with ASTM E84.
   2. Where indicated, provide fiberglass reinforced polypropylene facing on one side; with flame spread index of 25 or less, when tested in accordance with ASTM E84.
   3. Where indicated, provide black, non-woven fiberglass facing on one side; with flame spread index of 25 or less, when tested in accordance with ASTM E84.
   4. Smoke Developed Index: 450 or less, when tested in accordance with ASTM E84.
   5. Board Size: 24 by 48 inches.
   6. Board Thickness: 1 inch.
   7. Thermal Resistance (R-value): 4.2°F sq ft/Btu at 75°F, minimum, when tested according to ASTM C518.
   8. Maximum Density: 8.0 lb/cu ft.
   9. Manufacturers:
      a. Johns Manville International, Inc.; MinWool Safing
      b. Thermafiber, Inc
      c. ROXUL, Inc; CavityRock DD
      d. Or ENGINEER-approved equal.

2.04 BATT INSULATION MATERIALS

A. Where batt insulation is indicated, either glass fiber or mineral fiber batt insulation may be used, at Contractor's option.

B. Glass Fiber Batt Insulation: Flexible preformed batt or blanket, complying with ASTM C665; friction fit.
   1. Flame Spread Index: 25 or less, when tested in accordance with ASTM E84.
   2. Smoke Developed Index: 450 or less, when tested in accordance with ASTM E84.
   3. Combustibility: Non-combustible, when tested in accordance with ASTM E136, except for facing, if any.

4. Formaldehyde Content: Zero.
5. Thermal Resistance: per plan
6. Thickness: per plan
7. Facing: Aluminum foil, flame spread 25 rated; one side.
8. Facing: Aluminum foil, one side.
9. Manufacturers:
    a. CertainTeed Corporation
    b. Johns Manville Corporation
    c. Owens Corning Corp
    d. Or ENGINEER-approved equal.

C. Mineral Fiber Batt Insulation: Flexible or semi-rigid preformed batt or blanket, complying with ASTM C665; friction fit; unfaced flame spread index of 0 (zero) when tested in accordance with ASTM E84.
1. Where indicated, provide foil facing on one side; with flame spread index of 25 or less, when tested in accordance with ASTM E84.
2. Smoke Developed Index: 0 (zero), when tested in accordance with ASTM E84.
3. Thermal Resistance: per plan
4. Thickness: per plan
5. Manufacturers:
    a. Johns Manville International, Inc.; MinWool Sound Attenuation Fire Batts
    b. Thermafiber, Inc
    c. ROXUL, Inc; ComfortBatt
    d. ROXUL, Inc; Roxul AFB
    e. Or ENGINEER-approved equal.

2.05 ACCESSORIES

A. Sheet Vapor Retarder: Black polyethylene film for above grade application, 10 mil thick.

B. Tape: Bright aluminum self-adhering type, mesh reinforced, 2 inches wide.

C. Tape joints of rigid insulation in accordance with roofing and insulation manufacturers' instructions.

D. Insulation Fasteners: Impaling clip of unfinished steel with washer retainer and clips, to be adhered to surface to receive insulation, length to suit insulation thickness and substrate, capable of securely and rigidly fastening insulation in place.

E. Insulation Fasteners: Appropriate for purpose intended and approved by roofing manufacturer.
1. Length as required for thickness of insulation material and penetration of deck substrate, with metal washers.

F. Nails or Staples: Steel wire; electroplated or galvanized; type and size to suit application.

G. Wire Mesh: Galvanized steel, hexagonal wire mesh.

H. Protection Board for Below Grade Insulation: Cementitious, ¼-inch thick.

I. Adhesive: Type recommended by insulation manufacturer for application.

PART 3 - EXECUTION

3.01 EXAMINATION

A. Verify that substrate, adjacent materials, and insulation materials are dry and that substrates are ready to receive insulation and adhesive.

B. Verify substrate surfaces are flat, free of honeycomb, fins, irregularities, or materials or substances that may impede adhesive bond.

3.02 BOARD INSTALLATION AT FOUNDATION PERIMETER

A. Adhere a 6-inch-wide strip of polyethylene sheet over construction, control, and expansion joints with double beads of adhesive each side of joint.
   1. Tape seal joints.
   2. Extend sheet full height of joint.

B. Apply adhesive to back of boards:
   1. Three continuous beads per board length.
   2. Full bed 1/8-inch thick.

C. Install boards horizontally on foundation perimeter.
   1. Place boards to maximize adhesive contact.
   2. Install in running bond pattern.
   3. Butt edges and ends tightly to adjacent boards and to protrusions.

D. Extend boards over expansion joints, unbonded to foundation on one side of joint.

E. Cut and fit insulation tightly to protrusions or interruptions to the insulation plane.

F. Immediately following application of board insulation, place protective boards over exposed insulation surfaces.
   1. Apply adhesive in five continuous beads per board length.
   2. Install boards horizontally from base of foundation to top of insulation.
   3. Butt boards tightly, with joints staggered from insulation joints.

3.03 BOARD INSTALLATION AT EXTERIOR WALLS

A. Adhere a 6-inch-wide strip of polyethylene sheet over expansion joints with double beads of adhesive each side of joint.
   1. Tape seal joints between sheets.
   2. Extend sheet full height of joint.

B. Apply adhesive to back of boards:
   1. Three continuous beads per board length.
   2. Full bed 1/8-inch thick.

C. Install rigid insulation directly to steel studs or exterior grade sheathing at 16 inches on center with manufacturer recommended mechanical fasteners. Tape all joints with manufacturer's minimum 4-inch-wide sealant tape; comply with ASTM E2357.

D. Install boards horizontally on walls.
   1. Place boards to maximize adhesive contact.
   2. Install in running bond pattern.
   3. Butt edges and ends tightly to adjacent boards and to protrusions.

E. Extend boards over expansion joints, unbonded to wall on one side of joint.

F. Cut and fit insulation tightly to protrusions or interruptions to the insulation plane.

G. Place 6-inch-wide polyethylene sheet at perimeter of wall openings, from adhesive vapor retarder bed to window and door frames. Tape seal in place to ensure continuity of vapor retarder and air seal.

H. Tape insulation board joints.

3.04 BOARD INSTALLATION AT CAVITY WALLS

A. Secure impale fasteners to substrate at a frequency as follows:

1. 6 per insulation board.

B. Adhere a 6-inch-wide strip of polyethylene sheet over expansion joints with double beads of adhesive each side of joint.
   1. Tape seal joints between sheets.
   2. Extend sheet full height of joint.

C. Install boards to fit snugly between wall ties.
   1. Place membrane surface against adhesive.
   2. Place membrane surface facing out, and tape seal board joints.

D. Install boards horizontally on walls.
   1. Place boards to maximize adhesive contact.
   2. Install in running bond pattern.
   3. Butt edges and ends tightly to adjacent boards and to protrusions.
   4. Place impale fastener locking discs.

E. Cut and fit insulation tightly to protrusions or interruptions to the insulation plane.

F. Place 6 inch wide polyethylene sheet at perimeter of wall openings, from adhesive vapor retarder bed to window and door frames. Tape seal in place to ensure continuity of vapor retarder and air seal.

3.05 BOARD INSTALLATION UNDER CONCRETE SLABS

A. Place insulation under slabs on grade after base for slab has been compacted.

B. Cut and fit insulation tightly to protrusions or interruptions to the insulation plane.

C. Prevent insulation from being displaced or damaged while placing vapor retarder and placing slab.

3.06 BOARD INSTALLATION OVER LOW SLOPE ROOF DECK

A. Board Installation Over Roof Deck, General:
   1. See applicable roofing Specification Section for specific board installation requirements.
   2. Ensure vapor retarder is clean and dry, continuous, and ready for application of roofing system.
   3. Fasten insulation to deck in accordance with roofing manufacturer's written instructions and applicable Factory Mutual requirements.
   4. Do not apply more insulation than can be covered with roofing in same day.

3.07 BATT INSTALLATION

A. Install insulation and vapor retarder in accordance with manufacturer's instructions.

B. Install in exterior wall and roof spaces without gaps or voids. Do not compress insulation.

C. Trim insulation neatly to fit spaces. Insulate miscellaneous gaps and voids.

D. Fit insulation tightly in cavities and tightly to exterior side of mechanical and electrical services within the plane of the insulation.

E. Install with factory applied vapor retarder membrane facing warm side of building spaces. Lap ends and side flanges of membrane over framing members.

F. Staple or nail facing flanges in place at maximum 6 inches on center.

G. Tape insulation batts in place.

H. Retain insulation batts in place with wire mesh secured to framing members.

I. Tape seal butt ends, lapped flanges, and tears or cuts in membrane.

J. At wood framing, place vapor retarder on warm side of insulation by stapling at 6 inches on center. Lap and seal sheet retarder joints over member face.

K. At metal framing, place vapor retarder on warm side of insulation; lap and seal sheet retarder joints over member face.

L. Tape seal tears or cuts in vapor retarder.

M. Extend vapor retarder tightly to full perimeter of adjacent window and door frames and other items interrupting the plane of the membrane. Tape seal in place.

3.08 PROTECTION

A. Do not permit installed insulation to be damaged prior to its concealment.

END OF SECTION

SECTION 07 5400 – THERMOPLASTIC MEMBRANE ROOFING

GENERAL

1.01 SECTION INCLUDES

A. Mechanically attached PVC thermoplastic single-ply roofing system.

B. Fully adhered PVC thermoplastic single-ply roofing system.

C. Roof insulation.

D. Flashing accessories.

E. Edgings and terminations.

1.02 REFERENCES

A. American Society of Civil Engineers (ASCE) - ASCE 7 - Minimum Design Loads for Buildings and Other Structures, Current Revision.

B. ASTM International (ASTM):
   1. ASTM C 208 - Standard Specification for Cellulosic Fiber Insulating Board.
   2. ASTM C 578 - Standard Specification for Rigid, Cellular Polystyrene Thermal Insulation.
   3. ASTM C 1289 - Standard Specification for Faced Rigid Cellular Polyisocyanurate Thermal Insulation Board.
   4. ASTM D 4263 - Standard Test Method for Indicating Moisture in Concrete by the Plastic Sheet Method.
   5. ASTM D 4434 - Standard Specification for Poly (Vinyl Chloride) Sheet Roofing.
   6. ASTM E 96 - Standard Test Methods for Water Vapor Transmission of Materials.

C. Factory Mutual (FM Global):
   1. Approval Guide.
      a. Factory Mutual Standard 4470 - Approval Standard for Class 1 Roof Covers.
      b. Loss Prevention Data Sheets 1-28, 1-29.

D. 2018 International Building Code (or other locally adopted Building Code)

E. National Roofing Contractors Association (NRCA) - Low Slope Roofing and Waterproofing Manual, Current Edition.

F. Sheet Metal and Air Conditioning Contractors National Association, 1nc. (SMACNA) - Architectural Sheet Metal Manual.

G. Underwriters Laboratories (UL):
   1. TGFU R1306 - "Roofing Systems and Materials Guide".
   2. UL-790 - Standard Test Method for Fire Tests of Roof Coverings.

1.03 DESIGN CRITERIA

A. Wind Uplift Performance:
   1. Roof system is designed to withstand wind uplift forces as calculated using the current revision of ASCE-7.
   2. Roof system is designed to achieve a FM DS 1-29 Field Wind Uplift of 60 psf, a Perimeter Wind Uplift of 75 psf and a Corner Wind Uplift of 120 psf. See also General Structural Notes.

B. Fire Resistance Performance:
   1. Roof system will achieve a UL Class A rating when tested in accordance with UL-790.

C. Thermal Performance: Roof system will achieve a minimum R value not less than 30.

D. Drainage: Provide a roof system with positive drainage where all standing water dissipates within 48 hours after precipitation ends.

E. Building Codes:
   1. Roof system will meet the requirements of all federal, state and local code bodies having jurisdiction.

1.04 SUBMITTALS

A. Submit under provisions of Section 01 3300 – Submittal Procedures.

B. Product Data: Manufacturer's data sheets on each product to be used, including:
   1. Preparation instructions and recommendations.
   2. Storage and handling requirements and recommendations.
   3. Installation methods.

C. Detail Drawings:
   1. Submit approved plan, section, elevation or isometric drawings which detail the appropriate methods for all flashing conditions found on the project.
   2. Coordinate approved drawings with locations found on the Contract Drawings.

1.05 QUALITY ASSURANCE

A. Manufacturer Qualifications: All primary products specified in this section will be supplied by a single manufacturer.

1.06 DELIVERY, STORAGE, AND HANDLING

A. Store products in manufacturer's unopened packaging until ready for installation.

B. Store and dispose of hazardous materials, and materials contaminated by hazardous materials, in accordance with requirements of local authorities having jurisdiction.

1.07 PROJECT CONDITIONS

A. Proceed with roofing work only when weather conditions are in compliance with the manufacturer’s recommended limitations, and when conditions will permit the work to proceed in accordance with the manufacturer’s requirements and recommendations.

B. Proceed with work so new roofing materials are not subject to construction traffic. When necessary, new roof sections shall be protected and inspected upon completion for possible damage.

C. Provide protection, such as 3/4 inch thick plywood, for all roof areas exposed to traffic during construction. Plywood must be smooth and free of fasteners and splinters.

D. The surface on which the insulation or roofing membrane is to be applied shall be clean, smooth, dry, and free of projections or contaminants that would prevent proper application of or be incompatible with the new installation, such as fins, sharp edges, foreign materials, oil and grease.

E. New roofing shall be complete and weather tight at the end of the work day.

F. Contaminants such as grease, fats and oils shall not be allowed to come in direct contact with the roofing membrane.

G. When positioning membrane sheets, exercise care to locate all field splices away from low spots and out of drain sumps. All field splices should be shingled to prevent bucking of water.

1.08 WARRANTY

A. At project closeout, provide to Owner or Owners Representative an executed copy of the manufacturer's Total System warranty, outlining its terms, conditions, and exclusions from coverage.

PART 2 -PRODUCTS

2.01 MANUFACTURERS

A. Acceptable Manufacturer: Carlisle SynTec Systems,

B. Or equal

2.02 SCOPE / APPLICATION

A. Roof System: Provide a waterproof roof system, capable of withstanding uplift forces as specified in this section.
   1. Membrane Attachment: Fully Adhered.

B. Insulation: Provide a roof insulation system beneath the finish membrane.

2.03 MEMBRANE ATTACHMENT: FULLY ADHERED

A. Sure-Flex FRS PVC Membrane as manufactured by Carlisle SynTec, or equal
   1. Membrane consists of Fiberglas Reinforced Scrim that is encapsulated between the PVC based top and bottom plies. The combination of the fabric and PVC plies provide Sure-Flex FRS PVC membranes with high breaking strength, tearing strength, and puncture resistance.
   2. Color: White.
   3. Membrane Thickness: 80 mil nominal.
      a. Thickness over Scrim (ASTM D 4434): 0.025 inches (0.635mm) minimum.
      b. Tensile Strength (ASTM D 638): 1500 psi (110.4 MPa) minimum.
      c. Tear Resistance (ASTM D 1004): 10 lbf (45 N) minimum.
      d. Elongation at Break (ASTM D 638): 250 percent minimum machine direction. 220 percent minimum cross machine direction.
      e. Field Sheet Width: 120 inches (3048 mm) maximum.
      f. Length: 65 feet (19.8 m) maximum.

2.04 INSULATION

A. Polyisocyanurate: A foam core insulation board covered on both sides with a medium weight fiber reinforced felt facer meeting ASTM C 1289, Type II, Class 1. Carlisle HP-H.
   1. Compressive Strength: Grade 2 (20 psi) (138 kPa).

2.05 INSULATION ADHESIVE

A. FAST 100 or 100 LV Adhesive: A spray or extruded applied, two-component polyurethane, low-rise expanding foam adhesive used for attaching approved insulations to compatible substrates (concrete, cellular lightweight insulating concrete, gypsum, cementitious wood fiber, wood or steel) or existing smooth or gravel surfaced BUR, modified bitumen or cap sheets.

B. FAST 100 Catalyst: Added to FAST Adhesive (Part B Side) to quicken adhesive reaction time.

C. FAST Dual Cartridge Adhesive: A two-component, polyurethane construction grade, low-rising expanding adhesive designed for bonding insulation to various substrates using a portable applicator.

D. OlyBond 500 BA - A two-component, polyurethane, low-rise expanding adhesive used to bond insulation to various substrates using a mechanical dispenser system.

E. OlyBond Spot Shot - A two-component, polyurethane construction grade, low-rising expanding adhesive designed for bonding insulation to various substrates using a portable applicator.

2.06 FLASHING ACCESSORIES

A. Sure-Flex PVC Inside Corners: Pre-molded corner flashing for inside corners. 80 mil thickness.
   1. Color: White.

B. Sure-Flex PVC Outside Corners: Pre-molded corner flashing for outside corners. 80 mil thickness.
   1. Color: White.

C. Sure-Flex PVC T-Joint Covers: 40 mil thick non-reinforced PVC flashing cut into a 4.5 inch (114mm) diameter circle used to seal step-offs at splice intersections.
   1. Color: White.

D. Sure-Flex PVC Molded Pipe Flashings: A pre-molded flashing and clamping ring used for pipe penetrations. Available for 1 inch to 6 inch (25 to 152mm) diameter pipes.

E. Sure-Flex PVC Split Pipe Seals: Pre-fabricated flashing consisting of 60 mil thick reinforced Sure-Flex Membrane for pipes 1 inch to 6 inch (25 to152mm) in diameter. A split (cut) and overlap tab are incorporated to allow the pipe seal to be opened and wrapped around the pipe when it is not possible to pull a standard pipe flashing over a round penetration.

F. Sure-Flex PVC Square Tubing Wraps: Fabricated flashings made of 60 mil thick reinforced Sure-Flex membrane for square tubing. A split (cut) and overlap tab are incorporated into these parts to allow the seals to be opened and wrapped around a square penetration. Available for 3 inches, 4 inches and 6 inches (76, 102, 152 mm) diameter square tubing.

G. Sure-Flex PVC Molded Sealant Pockets:
   1. Pre-fabricated, interlocking, 2-piece, injection molded, flexible pocket with a rigid polypropylene vertical wall and pre-formed deck flanges.
   2. Use in conjunction with Thermoplastic One-Part Pourable Sealer as specified in this section for waterproofing pipe clusters or other odd shaped penetrations. Forms a 7-1/2 inches by 6 inches (191 x 152mm) oval when completed. Available in white only.

H. PVC Overlayment Strip: Manufacturer's standard PVC overlayment strip.

I. Sure-Flex PVC Non-Reinforced Flashing: 80 mil thick rolls 12 inches (305 mm) and 24 inches 610 mm) wide. Used for inside/outside corners and field fabricated pipe flashings when use of pre-molded accessories is not feasible.

J. PVC Contour Rib Profile: Extruded PVC profile measuring 1-1/4 inches tall and 2-1/8 inches wide (32 mm by 54 mm) including the welding flanges while the vertical profile is 3/8 inch (9.5 mm) thick. Available in 10 feet (3048 mm) lengths.

2.07 CLEANERS, PRIMERS, ADHESIVES AND SEALANTS

A. Low VOC PVC Bonding Adhesive: A high-strength solvent based adhesive that allows bonding of PVC and KEE-enhanced PVC membrane to various porous and non-porous substrates.

B. Sure-Flex PVC Cut Edge Sealant: Free flowing, clear sealant designed for sealing cut edges of Sure-Flex reinforced membrane.

C. Water Cut-Off Mastic: A one-component, low viscosity, self wetting, Butyl blend mastic used as a compression sealing agent between membrane and applicable substrates.

D. White One-Part Pourable Sealer: Manufacturer's recommended product.

E. CCW 702 Primer: Manufacturer's recommended product.

F. Cav-Grip: Manufacturer's recommended product.

G. Universal Single-Ply Sealant: A 100 percent solids, solvent free, one-part polyether sealant that is used as a termination bar sealant. Available in white only.

H. PVC Membrane Cleaner: Clear, solvent-based cleaner used to loosen and remove contaminants from the surface of exposed membrane.

2.08 EDGINGS AND TERMINATIONS

A. SecurEdge 200: A snap-on edge system consisting of a 24 gauge galvanized metal water dam. Finish as noted on the Finish Schedule of the Contract Drawings.

PART 3 -EXECUTION

3.01 EXAMINATION

A. Do not begin installation until substrates have been properly prepared.

B. If substrate preparation is the responsibility of another installer, notify Architect of unsatisfactory preparation before proceeding.

3.02 PREPARATION

A. Clean surfaces thoroughly prior to installation.

B. Prepare surfaces using the methods recommended by the manufacturer for achieving the best result for the substrate under the project conditions.

C. Do not commence Work until all other work trades have completed jobs that require them to traverse the deck on foot or with equipment.

D. A vapor retarder / temporary roof (Carlisle 725 TR Air & Vapor Barrier/Temporary Roof) may be applied to protect the inside of the structure prior to the roof system installation.

3.03 SUBSTRATE PREPARATION

A. Steel Deck:

1. Metal decks shall be a minimum uncoated thickness of 22 gauge and have a G-90 galvanized finish on all panels.
2. Decks must comply with the gauge and span requirements in the current Factory Mutual Approval Guide and be installed in accordance with Loss Prevention Data Sheet 1-28 or specific FM approval.
3. Remove any surface corrosion and repair severely corroded areas. Properly fasten loose or inadequately secured decking.

3.04 INSULATION - SYSTEM DESIGN

A. Base Layer:

1. Type: InsulBase Polyisocyanurate HP-H.
2. Thickness: 4.0 inches.
3. Attachment Method: Fasteners with plates and adhesive.

B. Top Layer:

1. Type: InsulBase Polyisocyanurate HP-H.
2. Thickness: 2.0 inches.
3. Attachment Method: Fasteners with plates and adhesive.

3.05 INSULATION PLACEMENT

A. Install insulation or membrane underlayment over the substrate with boards butted tightly together with no joints or gaps greater than 1/4 inch (6 mm). Stagger joints both horizontally and vertically if multiple layers are provided.

B. Secure insulation to the substrate with the required mechanical fasteners or insulation adhesive in accordance with the manufacturer's current application guidelines.

C. Do not install wet, damaged or warped insulation boards.

D. Stagger joints in one direction unless joints are to be taped. Install insulation boards snug. Gaps between board joints shall not exceed 1/4 inch (6 mm). Fill all gaps in excess of 1/4 inch (6 mm) with same insulation material.

E. Wood nailers must be at least 3 1/2 inches (89 mm) wide or 1 inch (25 mm) wider than adjacent metal flange. Thickness must equal that of insulation but not less than 1 inch (25 mm) thickness.

F. Miter and fill the edges of the insulation boards at ridges, valleys and other changes in

plane to prevent open joints or irregular surfaces. Avoid breaking or crushing of the insulation at the corners.

G. Do not install any more insulation than will be completely waterproofed each day.

3.06 INSULATION ATTACHMENT

A. Securely attach insulation to the roof deck for Adhered or Mechanically Fastened Roofing Systems. Attachment must have been successfully tested to meet or exceed the calculated uplift pressure required by the Building Code or ANSI/SPRI WD-1.

B. Enhance the perimeter and corner areas in accordance with the Building Code or ANSI/SPRI WD-1.

C. Install insulation layers applied with adhesive, coverage rate as necessary to achieve the specified attachment and uplift rating. Press each board firmly into place after adhesive develops strings when touched, typically 1-1/2 to 2 minutes after adhesive was applied, and roll with a weighted roller. Add temporary weight and use relief cuts to ensure boards are well adhered. Stagger the joints of additional layers by a minimum of 6 inches (152 mm).

3.07 MEMBRANE PLACEMENT AND ATTACHMENT (Fully Adhered)

A. Position Sure-Flex membrane over the acceptable substrate. Fold membrane sheet back lengthwise so half the underside of the membrane is exposed.

B. Apply Sure-Flex Bonding Adhesive in accordance with the manufacturer's published instructions, to the exposed underside of the membrane and the corresponding substrate area. Do not apply Bonding Adhesive along the splice edge of the membrane to be hot air welded over the adjoining sheet. Allow the adhesive to dry until it is tacky but will not string or stick to a dry finger touch.

1. Roll the coated membrane into the coated substrate while avoiding wrinkles. Brush down the bonded section of the membrane sheet immediately after rolling the membrane into the adhesive with a soft bristle push broom to achieve maximum contact.
2. Fold back the unbonded half of the sheet lengthwise and repeat the bonding procedures.

C. Position adjoining sheets to allow a minimum overlap of 2 inches (51mm).

D. Hot-air weld the Sure-Flex membrane sheets using the Automatic Hot Air Welding Machine or Hot Air Hand Welder in accordance with the manufacturer's hot air welding procedures.

E. Continue to install adjoining membrane sheets in the same manner, overlapping edges a minimum of 2 inches (51mm) and complete the bonding procedures as stated previously.

3.08 SEAM WELDING

A. Hot-air weld membrane using an Automatic Hot Air Welding Machine or Hot Air Hand Welder in accordance with the manufacturer's current guidelines. At all splice intersections, roll the seam with a silicone roller to ensure a continuous hot air welded seam.

B. Probe all seams once the hot air welds have thoroughly cooled (approximately 30 minutes).

C. Repair all seam deficiencies the same day they are discovered.

D. Apply Cut Edge Sealant on all cut edges of reinforced membrane (where the scrim reinforcement is exposed) after seam probing is complete. Cut Edge Sealant is not required but recommended on flat surfaces and is not required on vertical splices.

3.09 FLASHING

A. Flashing of parapets, curbs, expansion joints and other parts of the roof must be performed using Sure-Flex reinforced membrane. Sure-Flex non-reinforced membrane may be used for flashing pipe penetrations, Sealant Pockets, and scuppers, as well as inside and outside corners, when the use of pre-molded accessories is not feasible.

B. Follow manufacturer's typical flashing procedures for all wall, curb, and penetration flashing including metal edging/coping and roof drain applications.

3.10 DAILY SEALS

A. On phased roofing, when the completion of flashings and terminations is not achieved by the end of the work day, a daily seal must be performed to temporarily close the membrane to prevent water infiltration.

B. Complete an acceptable membrane seal in accordance with the manufacturer's requirements.

3.11 CLEAN UP

A. Perform daily clean-up to collect all wrappings, empty containers, paper, and other debris from the project site. Upon completion, all debris must be disposed of in a legally acceptable manner.

B. Prior to the manufacturer's inspection for warranty, the applicator must perform a pre-inspection to review all work and to verify all flashing has been completed as well as the application of all caulking.

3.12 PROTECTION

A. Protect installed products until completion of project.

B. Touch-up, repair or replace damaged products before Substantial Completion.

END OF SECTION

SECTION 07 6100 – SHEET METAL ROOFING

PART 1 – GENERAL

1.01 SECTION INCLUDES

A. Sheet metal roofing, associated flashings, and underlayment.

B. Counterflashings.

C. Gutters and downspouts.

D. Snow guards.

E. Integral fascias.

1.02 REFERENCE STANDARDS

A. American Architectural Manufacturer's Association (AAMA): www.aamanet.org:
   1. AAMA 621 - Voluntary Specifications for High Performance Organic Coatings on Coil Coated Architectural Hot Dipped Galvanized (HDG) & Zinc-Aluminum Coated Steel Substrates.
   2. AAMA 809.2 - Voluntary Specification Non-Drying Sealants.

B. American Society of Civil Engineers (ASCE): www.asce.org/codes-standards:
   1. ASCE 7 - Minimum Design Loads for Buildings and Other Structures.

C. ASTM International (ASTM): www.astm.org:

A653	Steel Sheet, Zinc-Coated (Galvanized) or Zinc-Iron Alloy-Coated (Galvannealed) by the Hot-Dip Process.
A755	Steel Sheet, Metallic Coated by the Hot-Dip Process and Prepainted by the Coil-Coating Process for Exterior Exposed Building Products.
A792/A792M	Steel Sheet, 55 % Aluminum-Zinc Alloy-Coated by the Hot-Dip Process.
C645	Nonstructural Steel Framing Members.
C754	Installation of Steel Framing Members to Receive Screw-Attached Gypsum Panel Products.
C920	Elastomeric Joint Sealants.
A980	Steel, Sheet, Carbon, Ultra High Strength Cold Rolled.
D1003	Haze and Luminous Transmittance of Transparent Plastics.
D2244	Calculation of Color Differences from Instrumentally Measured Color Coordinates.
D4214	Evaluating Degree of Chalking of Exterior Paint Films.
E283	Determining Rate of Air Leakage Through Exterior Windows, Curtain Walls, and Doors Under Specified Pressure Differences Across the Specimen.
E331	Water Penetration of Exterior Windows, Skylights, Doors, and Curtain Walls by Uniform Static Air Pressure Difference
E1646	Water Penetration of Exterior Metal Roof Panel Systems by Uniform Static Air Pressure Difference.
E1680	Rate of Air Leakage Through Exterior Metal Roof Panel Systems.
E1980	Calculating Solar Reflectance Index of Horizontal and Low-Sloped Opaque Surfaces.

1.03 ADMINISTRATIVE REQUIREMENTS

A. Preinstallation Meeting: Convene one week before starting work of this section.

1.04 SUBMITTALS

A. See Section 01 3300 – Submittal Procedures.

B. Shop Drawings: Indicate material profile, jointing pattern, jointing details, fastening methods, flashings, terminations, and installation details.

C. Product Data: Provide data on metal types, finishes, and characteristics.

1.05 QUALITY ASSURANCE

A. Perform work in accordance with SMACNA Architectural Sheet Metal Manual requirements and standard details, except as otherwise noted.
   1. Maintain one copy on project site.

1.06 DELIVERY, STORAGE, AND HANDLING

A. Stack material to prevent twisting, bending, or abrasion, and to provide ventilation. Slope metal sheets to ensure drainage.

B. Prevent contact with materials that could cause discoloration or staining.

1.07 WARRANTY

A. Correct defective Work within a five year period after Date of Substantial Completion. Defective work includes degradation of metal finish.

PART 2 – PRODUCTS

2.01 SHEET MATERIALS

A. PBR Roof Panel
   1. PBR Panel: A through-fastened sidewall panel with 1 1/4 inch (32mm) ribs at 12 inches (305mm) on center. The area between the ribs is reinforced to minimize oil-canning. Reverse roll optional.
   2. Gauge: 26.
   3. Dimensions: 36 inches (915mm) wide by 1 1/4 inch (32mm) high.

B. Standing Seam Metal Roof
   1. Material: Steel conforming to ASTM A792.
      a. 24 Gauge: Yield strength 50,000 psi; with aluminum-zinc alloy coating conforming to ASTM A792, Class AZ50.
   2. Panel Width and Pattern:
      b. 12” or 16” panel width.
   3. Panel Seam Height: 1.25 - 2 inches.
   4. Panel Finish: Provide primer and top finish coat on exposed faces; provide primer and backer coat on concealed faces of panels.
      a. Panel Color: To be selected by Owner
   5. Seam Sealant: The factory applies high-grade butyl mastic sealant within the confines of the panel’s female leg, designed to seal against the adjacent male panel leg.
   6. Clips: Provide clip designed to allow panels to thermally expand and contract. Clip shall incorporate a self-centering feature to allow 1 inch of movement in both directions along panel length. Clip type shall be selected to meet positive and negative pressures as specified. Factory-installed sealant to provide continuity of seal at clip locations

7. Bearing plate, if required, shall be designed with tabs to attached clip base to bearing plate on the ground, prior to installation.
8. Fasteners: As recommended by manufacturer for performance indicated.
9. Trims and Flashings: Material, metal thickness, and finish to match panels. Profiles indicated in Drawings.
    a. Provide manufacturer's standard accessories and other items essential to completeness of standing seam roof installation.
    b. Panel Penetration Flashings: As recommended by panel manufacturer; designed to provide sufficient movement to prevent creation of points of fixity at penetrations.
10. Manufacturer: AEP Span-Lok, ABC Lokseam or approved equal.

2.02 ACCESSORIES

A. Fasteners: Galvanized steel, with soft neoprene washers.

B. Underlayment: Synthetic non-asphaltic sheet, intended by manufacturer for mechanically fastened roofing underlayment without sealed seams.
    1. Type: Woven polypropylene with anti-slip polyolefin coating on both sides.
    2. Minimum Requirements: Comply with requirements of ICC-ES AC188 for non-self-adhesive sheet.
    3. Self Sealability: Passing nail sealability test specified in ASTM D1970.
    4. Flammability: Minimum of Class A, when tested in accordance with ASTM E108.
    5. Ultraviolet Resistance and Weatherability: Approved in writing by manufacturer for exposure to weather for minimum of 12 months.
    6. Low Temperature Flexibility: Passing test specified in ASTM D1970.
    7. Water Vapor Permeance: Vapor retarder; maximum of 0.1 perm, when tested in accordance with ASTM E96/E96M Procedure A (desiccant method).
    8. Fasteners: As specified by manufacturer and building code qualification report or approval, if any.

C. Underlayment: 6 mil polyethylene.

D. Slip Sheet: Rosin sized building paper.

E. Primer: Zinc molybdate type.

F. Protective Backing Paint: Zinc molybdate alkyd.

G. Sealant: As required by manufacturer.

H. Plastic Cement: ASTM D4586, Type I.

I. Eave Protection Sheet: Rubberized asphalt bonded to sheet polyethylene, 40 mil total thicknesses, with strippable treated release paper

J. Reglets: Surface mounted type, same material as roofing sheets; face and ends covered with plastic tape.

K. Solder: ASTM B32; Sn50 (50/50) type.

L. Splash Pads: Precast concrete type, of sizes and profiles indicated; minimum 3000 psi at 28 days, with minimum 5 percent air entrainment.

2.03 FABRICATION

A. Form sections true to shape, accurate in size, square, and free from distortion or defects.

B. Fabricate cleats of same material as sheet, same gage as roofing sheet.

C. Fabricate starter strips, interlockable with sheet.

D. Form pieces in longest practical lengths.

E. Hem exposed edges on underside 1/2 inch; miter and seam corners.

F. Form material with standing seams, except where otherwise indicated. At moving joints, use sealed lapped, bayonet-type or interlocking hooked seams.

G. Tin edges of copper sheet to be soldered. Solder shop formed metal joints. After soldering, remove flux. Wipe and wash solder joints clean. Weather seal joints.

H. Fabricate corners from one piece with minimum 18 inch long legs; seam for rigidity, seal with sealant.

I. Fabricate vertical faces with bottom edge formed outward 1/4 inch and hemmed to form drip.

J. Fabricate flashings to allow toe to extend 2 inches over roofing gravel. Return and brake edges.

K. Fabricate snow guards in accordance with SMACNA.

2.04 FACTORY FINISHING

A. Clear Anodized Finish: AAMA 611 AA-M12C22A41 Class I clear anodic coating not less than 0.7 mils thick.

B. Color Anodized Finish: AAMA 611 AA-M12C22A42/44 Class I integrally or electrolytically colored anodic coating not less than 0.7 mils thick.

C. Modified Silicone Polyester Coating: Pigmented Organic Coating System, AAMA 2603; baked enamel finish system.

D. Fluoropolymer Coating: High Performance Organic Finish, AAMA 2604; multiple coat, thermally cured fluoropolymer finish system.

E. PVDF (Polyvinylidene Fluoride) Coating: Superior Performance Organic Finish, AAMA 2605; multiple coat, thermally cured fluoropolymer finish system.

F. Color: As shown on drawings.

G. Primer Coat: On coated sheets, finish concealed side of sheet with primer compatible with finish system as recommended by finish system manufacturer.

PART 3 – EXECUTION

3.01 EXAMINATION

A. Inspect roof deck to verify deck is clean and smooth, free of depressions, waves, or projections, properly sloped to drains.

B. Verify deck is dry and free of snow or ice. Verify joints in wood deck are solidly supported and fastened.

C. Verify correct placement of wood nailers and insulation positioning between nailers.

D. Verify roof openings, curbs, pipes, sleeves, ducts, or vents through roof are solidly set, reglets are in place, and nailing strips located.

E. Verify roofing termination and base flashings are in place, sealed, and secure.

3.02 PREPARATION

A. Install starter and edge strips, and cleats before starting installation.

B. Install surface mounted reglets true to lines and levels. Seal top of reglets with sealant.

C. Back paint concealed metal surfaces and surfaces in contact with dissimilar metals with protective backing paint to a minimum dry film thickness of 15 mil.

D. Place eave edge metal flashings tight with fascia boards. Weather lap joints 2 inches and seal with plastic cement. Secure flange with nails per plan.

3.03 INSTALLATION - EAVE (ICE DAM) PROTECTION

A. Apply eave protection sheet in accordance with manufacturer's instructions.

B. Apply 4-inch-wide band of plastic cement over deck flange of eave edge flashings, and embed an 18-inch-wide strip of eave protection sheet. Place starter strip with eave edge flush with face of flashings. Secure in place. Lap ends minimum 6 inches.

C. Apply plastic cement at rate of approximately 1-1/4 gal/100 sq ft over starter strip.

D. Starting from lower edge of starter strip, lay additional 36-inch-wide strips of eave protection sheet in plastic cement, to produce a two ply membrane. Weather lap plies minimum 19 inches and nail in place. Lap ends minimum 6 inches. Stagger end joints of each consecutive ply.

E. Extend eave protection sheet minimum 4 feet upslope beyond interior face of exterior wall.

3.04 INSTALLATION - ROOFING

A. Apply underlayment over entire roof area.
   1. Apply in single layer laid perpendicular to slope; weather lap edges 2 inches and nail in place.
   2. Apply in 2 layers; the first layer laid parallel to slope with joints lapped 6 inches, second layer laid perpendicular to slope with 2-inch lapped edges.
   3. Minimize nail quantity.

B. Apply slip sheet in one layer, laid loose.

C. Cleat and seam all joints.

D. Use plastic cement for joints between metal and bitumen and for joints between metal and felts.

E. Provide formed metal pans for protrusions through roof. Fill pans watertight with plastic cement.

F. Provide gutters.

G. Solder lap joints. After soldering, wash metal clean with neutralizing solution, rinse with water.

H. Install snow guards as shown in drawings.

3.05 INSTALLATION – PBR ROOFING

A. Conform to SMACNA Architectural Sheet Metal Manual

B. Roof shall have a minimum pitch of 1/12.

C. Space seams as required.

D. Panel shall begin at gable end of roof opposite the prevailing rain-bearing wind.

E. Panel to be laid square the eave and ridge.

F. If end-lapping is required, the upper panel should lap over the lower panel. Place an overhang 2-3 inches to provide a drip edge (1 inch for gutter).

G. Butyl tape shall be applied above and beneath inside closure.

3.06 INSTALLATION - STANDING SEAM ROOFING

A. Conform to SMACNA Architectural Sheet Metal Manual

B. Space standing seams as required.

C. Lay sheets with long dimension perpendicular to eaves. Apply pans beginning at eaves.

D. Lock cleats into seams and flatten.

E. Stagger transverse joints of roofing sheets.

F. At eaves and gable ends, terminate roofing by hooking over edge strip.

G. Finish standing seams 1 inch high on flat surfaces

H. Finish standing seams 1/2 inch high on curved surfaces.

I. Bend up one side edge 1-1/2 inches and other edge 1-3/4 inches.

J. Make first fold 1/4 inch wide single fold and second fold ½-inch wide, providing locked portion of standing seam, 5 plies in thickness.

K. Fold lower ends of seams at eaves over at 45-degree angle.

L. Terminate standing seams at ridge and hips by turning down with tapered fold.

M. Form valleys of sheets not exceeding 10 feet in length. Lap joints 6 inches in direction of drainage.

N. Extend valley sheet minimum 6 inches under roofing sheets.

O. At valley, double fold valley and roofing sheets and secure with cleats spaced 18 inches on center.

3.07 INSTALLATION - BUILT-IN GUTTERS AND DOWNSPOUTS

A. Conform to SMACNA Architectural Sheet Metal Manual

B. Secure gutter lining to substrate with cleats spaced as shown in drawings.

C. Longitudinal joints not acceptable.

D. At roof edges, extend gutter lining under metal roofing 6 inches minimum and terminate in 3/4 inch folded edge secured by cleats. Hook lower end of roofing into lock strip to form 3/4 inch wide loose-lock seam.

E. Seal gutters watertight. Seal joint of gutter to drain.

F. Connect downspouts to downspout boots as shown in drawings.

G. Set splash pans under downspouts.

3.08 INSTALLATION - FLASHINGS

A. Conform to SMACNA Architectural Sheet Metal Manual

B. Insert flashings into reglets to form tight fit.

1. Secure in place with lead wedges as required. Pack remaining spaces with lead wool.

2. Seal flashings into reglets with sealant.

C. Secure flashings in place using concealed fasteners. Use exposed fasteners only where permitted.

D. Cleat and seam all joints.

E. Apply plastic cement compound between metal flashings and felt flashings.

F. Fit flashings tight in place. Make corners square, surfaces true and straight in planes, and lines accurate to profiles.

G. Seal metal joints watertight.

H. Solder metal joints for full metal surface contact. After soldering, wash metal clean with neutralizing solution and rinse with water.

3.09 PROTECTION

A. Do not permit traffic over unprotected roof surface.

END OF SECTION

SECTION 07 6200 – SHEET METAL FLASHING AND TRIM

PART 1 – GENERAL

1.01 THE REQUIREMENT

A. Furnish and install all formed and/or flat metal 11-gauge and lighter, in accordance with the Contract Documents.

1.02 STANDARDS

A. Except as herein modified, fabricate, and install work in accordance with printed standards of Sheet Metal and Air Conditioning Contractors National Association (SMACNA).

1.03 SUBMITTALS

A. Submittals shall be furnished in accordance with Section 01 33 00 – Submittal Procedures.

B. Indicate type, gauge, and shape of sheet metal items; type, size, location and spacing of all joints, including expansion joints; shop finishes and other required coatings.

1.04 DELIVERY

A. Time deliveries with construction progress. Cooperate with various trades to which sheet metal items are furnished and with those whose progress of work is dependent upon installation of sheet metal items.

1.05 QUALITY ASSURANCE

A. Guarantee sheet metal work for a period of 2 years to be free of water leaks.

B. Guarantee shall include replacement and/or repair of other work damaged by water due to leakage in sheet metal work.

PART 2 – MATERIALS

2.01 SHEET METAL

A. Aluminum Sheet: Plain Sheet: ASTM B209, alloy 3003, 3004, Alclad 3003 or Alclad 3004; appropriate temper, except where temper is specified; mill finish unless otherwise specified.

B. Zinc-Coated (Galvanized) Steel Sheet: ASTM A526, copper bearing. Unless otherwise noted, gauges indicated or specified are Galvanized Sheet Gauge. Zinc coating shall be in accordance with ASTM A525 and shall not be less than coating Class G90.

2.02 FASTENERS

A. General:
   1. Type best suited for intended purposes.
   2. Use aluminum or stainless steel fasteners with aluminum.
   3. Use stainless steel or hot-dip galvanized steel fasteners with zinc-coated steel.
   4. Use only stainless steel fasteners when attaching dissimilar metals.

B. Material:
   1. Aluminum Fastener Materials: Ally 6061 or 5056.
   2. Stainless Steel Materials: Type 305
   3. Fasteners for Securing Sheet metal to Concrete and Masonry shall be Fastway Extruded Vinyl Anchors, Holub “Hi-Red” plastic screw anchors, “Star” plastic anchors or equal non-ferrous anchors, used with wood or sheet metal screws of specified type material; lead anchors are not acceptable.
   4. Nails for Securing Sheet metal to Wood shall be the specified type material; barbed, annular thread or screw type.

2.03 SOLDER

A. Type and composition best suited for material being soldered.

B. Composition Sn50 for galvanized metal.

C. For aluminum, use solder composition as recommended by metal manufacturer for type alloy to be soldered.

2.04 FLUX

A. Type and composition best suited for material being soldered.

2.05 PRIMERS

A. Asphalt Primer: ASTM D41, brushable.

B. Galvanized Metal Primer: Zinc Dust-zinc Oxide Primer as specified under Section 09 91 00, Painting.

2.06 BUTYL SEALING TAPE PRC

A. Butyl-Lock sealant type: Morrison & Company's CL-50 "Cushion-Lock" sealing tape or equal (3/32-inch x 1-inch).

PART 3 – EXECUTION

3.01 GENERAL

A. Cut edges or joints and abrasions exposing base metal of galvanized sheet metal shall be coated with solder to equivalent thickness of zinc coating before assembling or installing sheet metal items.

B. Wipe all soldered joints clean of flux. Completely neutralize acid fluxes by washing soldered joints with soda.

C. Coat all aluminum surfaces in contact with wood with asphalt primer, and allow to dry before setting in place.

D. Coat all metal surfaces in contact with built-up roofing using asphalt bitumen with asphalt primer, and allow to dry before setting in place.

E. Provide insulation of dissimilar metals from contact with each other with coating of asphalt primer.

F. Finish all sheet metal work straight and true, with miters and joints accurately fitted. Exposed work shall be free of dents. All corners shall be reinforced, and seams soldered or otherwise made waterproof. Exposed edges shall be hemmed or finished smooth.

G. All work shall be made watertight. Expect where provision is required for expansion and contraction, all joints and seams shall be locked or otherwise made mechanically strong. Solder may be used, where appropriated, to make joints and seams watertight, but shall not be considered as providing mechanical strength.

1. Flashing: Flashing throughout shall be 26-gauge galvanized iron or 20-gauge aluminum. Unless otherwise shown, flashing shall be at locations indicated on Drawings and as otherwise required for watertight construction.
2. Downspouts: Downspout sleeves shall be galvanized iron, sizes indicated on Drawings. Miter and solder at change of direction.
3. Gutters: Gutters shall be galvanized iron or aluminum, shaped as shown on Drawings. Miter corners and solder joints. Joints shall be lapped, riveted or soldered. Slip joints, where required, shall have grooves sealed with white butyl sealing tape. Gutter expansion joints shall be located midway between downspout outlets and shall fall on a 4-foot module. The joint shall be of a design, which will provide watertight connection and permit freedom of movement of the gutter lining.

3.02 SHOP PAINTING

A. Galvanized steel, except as otherwise specified, shall be given a shop treatment of copper acetate solution of 6 ounces of copper acetate to one gallon of water, and followed by a brush or spray-coat of galvanized metal primer compatible with finish coat system.

3.03 ASSEMBLIES

A. Fabricate assemblies from materials and of gauges indicated or specified. Where material is not indicated, fabricate from zinc-coated steel not loess that 26-gauge, aluminum not less than 20-gauge.

B. Seal between laps of expansion joints of gutters, flashing, etc., with butyl sealing tape.

C. Cleats supporting bottom edge of edging, etc., shall be continuous, secure and not more than 12-inch centers.

D. Secure deck flanges of edging, etc., on not more than 4-inch centers.

END OF SECTION

SECTION 07 7200 – ROOF ACCESSORIES

PART 1 – GENERAL

1.01 SECTION INCLUDES

A. Manufactured curbs, equipment rails, and pedestals.

B. Roof hatches, manual and automatic operation, including smoke vents.

C. Snow guards.

1.02 REFERENCE STANDARDS

A. ASTM A123/A123M - Zinc (Hot-Dip Galvanized) Coatings on Iron and Steel

B. ASTM A153/A153M - Zinc Coating (Hot-Dip) on Iron and Steel Hardware

C. ASTM A653/A653M - Steel Sheet, Zinc-Coated (Galvanized) or Zinc-Iron Alloy-Coated (Galvannealed) by the Hot-Dip Process

D. ASTM A792/A792M - Steel Sheet, 55% Aluminum-Zinc Alloy-Coated by the Hot-Dip Process

E. FM P7825 - Approval Guide; Factory Mutual Research Corporation

F. MSS SP-58 - Pipe Hangers and Supports - Materials, Design, Manufacture, Selection, Application, and Installation; Manufacturers Standardization Society of the Valve and Fittings Industry, Inc.

G. UL (BMD) - Building Materials Directory

1.03 SUBMITTALS

A. See Section 01 3300 – Submittal Procedures.

B. Product Data: Manufacturer's data sheets on each product to be used.
   1. Preparation instructions and recommendations.
   2. Storage and handling requirements and recommendations.
   3. Installation methods.
   4. Maintenance requirements.
   5. For smoke hatches, submit evidence of approval by evaluation agency specified.

C. Shop Drawings: For non-penetrating rooftop supports, submit detailed layout developed for this project, with design calculations for loadings and spacings.

D. Certificate: For smoke hatches, provide certificate of approval from authority having jurisdiction.

1.04 DELIVERY, STORAGE, AND HANDLING

A. Store products in manufacturer's unopened packaging until ready for installation.

B. Store products under cover and elevated above grade.

PART 2 – PRODUCTS

2.01 MANUFACTURED CURBS

A. Manufactured Curbs, Equipment Rails, and Other Roof Mounting Assemblies:
   1. AES Industries Inc.: www.aescurb.com.
   2. The Pate Company: www.patecurbs.com.
   3. Roof Products & Systems (RPS) by Commercial Products Group of Hart & Cooley, Inc: www.rpscurbs.com.

4. Or ENGINEER-approved equal.

B. Manufactured Curbs, Equipment Rails, and Other Roof Mounting Assemblies: Factory-assembled hollow sheet metal construction with fully mitered and welded corners, integral counterflashing, internal reinforcing, and top side and edges formed to shed water.
   1. Sheet Metal: Hot-dip zinc coated steel sheet complying with ASTM A653/A653M, SS Grade 33; G60 coating designation; 18 gauge, 0.048 inch thick.
   2. Roofing Cants: Provide integral sheet metal roofing cants dimensioned to begin slope at top of roofing insulation; 1:1 slope; minimum cant height 4 inches.
   3. Manufacture curb bottom and mounting flanges for installation directly on roof deck, not on insulation; match slope and configuration of roof deck.
   4. Provide the layouts and configurations shown on the drawings.

C. Curbs Adjacent to Roof Openings: Provide curb on all sides of opening, with top of curb horizontal for equipment mounting.
   1. Provide preservative treated wood nailers along top of curb.
   2. Insulate inside curbs with 1-1/2 inch thick fiberglass insulation.
   3. Height Above Finished Roof Surface: 6 inches, minimum.
   4. Height Above Roof Deck: 14 inches, minimum.

D. Equipment Rails: Two-sided curbs in straight lengths, with top horizontal for equipment mounting.
   1. Provide preservative treated wood nailers along top of rails.
   2. Height Above Finished Roof Surface: 6 inches, minimum.
   3. Height Above Roof Deck: 14 inches, minimum.

E. Pipe, Duct, and Conduit Mounting Pedestals: Vertical posts, minimum 8 inches square unless otherwise indicated.
   1. Provide sliding channel welded along top edge with adjustable height steel bracket, manufactured to fit item supported.
   2. Height Above Finished Roof Surface: 6 inches, minimum.
   3. Height Above Roof Deck: 14 inches, minimum.

2.02 ROOF HATCHES, MANUAL AND AUTOMATIC OPERATION

A. Manufacturers - Sound Rated Roof Hatches:
   1. Bilco Co.: www.bilco.com.
   2. Milcor by Commercial Products Group of Hart & Cooley, Inc: www.milcorinc.com.
   3. Or ENGINEER-approved equal.

B. Manufacturers - Roof Hatches:
   1. Acudor Products Inc; Aluminum Roof Hatch: www.acudor.com.
   2. Bilco Company; Type S (ladder access, standard size, solid cover): www.bilco.com.
   3. Dur-Red Products: www.dur-red.com.
   4. Milcor by Commercial Products Group of Hart & Cooley, Inc: www.milcorinc.com.
   5. Or ENGINEER-approved equal.

C. Manufacturers - Smoke Vent Roof Hatches:
   1. Bilco Company; Type DSH (double leaf): www.bilco.com.
   2. Bristolite Daylighting Systems, Inc; Bristol Smoke Vent SVAA: www.bristolite.com.
   3. Sunoptics Prismatic Skylights, a Division of Acuity Brands; Industrial Smoke Vent: www.sunoptics.com.
   4. Or ENGINEER-approved equal.

D. Roof Hatches: Factory-assembled steel frame and cover, complete with operating and release hardware.
   1. Style: Provide flat metal covers unless otherwise indicated.

2. Mounting: Provide frames and curbs suitable for mounting conditions indicated on the drawings.
3. Smoke Hatches: Where "smoke" or "smoke/heat" operation is indicated, provide the following additional features, and omit manual operation for access:
   a. Smoke Release Mechanism: Automatic opening on melting of replaceable UL-listed fusible link at 165°F.
   b. UL-listed as automatically operated smoke and heat vent.
   c. Fire Alarm Connection: Provide separate resettable electrical link release mechanism and connection point for fire alarm system.
4. Sound Rated Hatches: Two sets of double leaf doors with air space between upper and lower doors; upper doors to open upward, lower doors to open downward; minimum STC of 45.
5. Size(s): As indicated on drawings; single-leaf style unless indicated as double-leaf.
6. For Ladder Access: Single leaf; 30 by 36 inches.
7. For Ships Ladder Access: Single leaf; 30 by 54 inches.
8. For Stair Access: Single leaf; 30 by 96 inches.
9. For Equipment Access: Double leaf; 48 by 48 inches.
10. For Smoke Venting Without Access: 24 by 24 inches.

E. Frames/Curbs: One-piece curb and frame with integral cap flashing to receive roof flashings; extended bottom flange to suit mounting.
   1. Material: Galvanized steel, 14 gauge, 0.0747 inch thick.
   2. Finish: Factory prime paint.
   3. Insulation: 1 inch rigid glass fiber, located on outside face of curb.
   4. Curb Height: As indicated on drawings.

F. Metal Covers: Flush, insulated, hollow metal construction.
   1. Capable of supporting 40 psf live load.
   2. Material: Galvanized steel; outer cover 14 gauge, 0.0747 inch thick, liner 22 gauge, 0.03 inch thick.
   3. Material: Mill finished aluminum; outer cover 0.125 inch thick, liner 0.04 inch thick.
   4. Finish: Factory prime paint.
   5. Insulation: 1 inch rigid glass fiber.
   6. Gasket: Neoprene, continuous around cover perimeter.

G. Skylight Covers: Plastic glazed framed cover.
   1. Capable of supporting 40 psf live load.
   2. Glazing Frame: 0.04 inch thick aluminum.
   3. Shape: Convex dome shaped.
   4. Glazing: Single thickness, clear acrylic.
   5. Gasket: Neoprene, continuous around cover perimeter.

H. Hardware: Steel, zinc coated and chromate sealed, unless otherwise indicated or required by manufacturer.
   1. Lifting Mechanisms: Compression or torsion spring operator with shock absorbers that automatically opens upon release of latch; capable of lifting covers despite 10 psf load.
   2. Hinges: Heavy duty pintle type.
   3. Hold open arm with vinyl-coated handle for manual release.
   4. Latch: Upon closing, engage latch automatically and reset manual release.
   5. Manual Release: Pull handle on interior.
   6. Smoke Hatches: Manual release operation not to disturb automatic release mechanisms; easy resetting by OWNER's maintenance personnel; provide latch designed to prevent relatching unless the automatic release mechanism has been properly reset for automatic operation.

7. Locking: Padlock hasp on interior.

2.03 NON-PENETRATING ROOFTOP ASSEMBLIES

A. Manufacturers - Non-Penetrating Rooftop Assemblies:
   1. PHP Systems/Design: www.phpsd.com.
   2. Hart & Cooley, Inc.: www.portalsplus.com.
   3. Or ENGINEER-approved equal.

B. Non-Penetrating Rooftop Assemblies: Manufacturer-engineered and factory-fabricated, with pedestal bases that rest on top of roofing membrane, not requiring any attachment to the roof structure, and not penetrating the roofing assembly.
   1. Design Loadings and Configurations: As required by applicable codes.
   2. Height: Provide minimum clearance of 6 inches under supported items to top of roofing.
   3. Support Spacing and Base Sizes: As required to distribute load sufficiently to prevent indentation of roofing assembly.
   4. Steel Components: Stainless steel, or carbon steel hot-dip galvanized after fabrication in accordance with ASTM A123/A123M.
   5. Hardware, Bolts, Nuts, and Washers: Stainless steel, or carbon steel hot-dip galvanized after fabrication in accordance with ASTM A153/A153M.

C. Walkways, Stairs, and Platforms: Structural steel frame, walking surfaces, and railings.
   1. Dimensions: As indicated on the drawings.
   2. Walking Surfaces and Stair Treads: Steel grating, either formed plank grating or welded bar grating; serrated surface.

D. Pipe Supports: Provide attachment fixtures complying with MSS SP-58 and as indicated.
   1. Attachment/Support Fixtures: As recommended by manufacturer, same type as indicated for equivalent indoor hangers and supports; corrosion resistant material.
   2. See relevant piping system Specification Section for additional requirements.

E. Duct Supports:

F. Conduit and Cable Tray Supports:

G. Non-Penetrating Pedestals: Steel pedestals with square, round, or rectangular bases.
   1. Bases: High density polypropylene.
   2. Base Sizes: As required to distribute load sufficiently to prevent indentation of roofing assembly.
   3. Steel Components: Stainless steel, or carbon steel hot-dip galvanized after fabrication in accordance with ASTM A123/A123M.
   4. Products:
      a. Hart & Cooley, Inc.; Pedestal Plus: www.portalsplus.com.
      b. Or ENGINEER-approved equal.

2.04 SNOW GUARDS

A. Snow Guards:
   1. Berger Building Products: www.bergerbp.com.
   2. Snostop: www.snostop.com.
   3. Sno Gem; Original Polycarbonate: www.snogem.com.
   4. Alpine Snow Guards: www.alpinesnowguards.com.
   5. Or ENGINEER-approved equal.

B. Snow Guards: Individual projecting polycarbonate shapes, set between roofing shingles/tiles, and mechanically fastened to roof deck.
   1. Wire Loops: Copper wire, 0.135 inch diameter, with copper tabs, 16 oz/sq ft, mill finish.

2. Projecting Metal Shapes: Bronze castings, triangular spike design.
3. Projecting Polycarbonate Shapes: Clear polycarbonate plastic with UV stabilizers, semi-circular design.
4. Finish: Mill.
5. Placement: As shown on drawings.

C. Fence Type Snow Guard: Continuous snow guard; tubing set in brackets.
1. Bracket Base Plate: Shaped to fit roof tile.
2. Distance from Eaves: 8 inches.
3. Bracket Spacing: 8 inches.
4. Brackets: Aluminum on matching base plate.
5. Tubing: Aluminum, mill finish.
a. Outside Diameter: 1 inch.
b. Wall Thickness: 1/8 inch.
c. Threaded Couplings: As recommended by manufacturer.
d. End Collars and Caps: Metal to match.

D. Clamps for Standing Seam Roof: Stainless steel clamps attached to standing seams of roof panels; for attachment of snow guard brackets.
1. Seam Profile: Standard.
2. Clamp Spacing: Every panel seam; maximum spacing of 24 inches.

PART 3 – EXECUTION

3.01 EXAMINATION

A. Do not begin installation until substrates have been properly prepared.

B. If substrate preparation is the responsibility of another installer, notify ENGINEER of unsatisfactory preparation before proceeding.

3.02 PREPARATION

A. Clean surfaces thoroughly prior to installation.

B. Prepare surfaces using the methods recommended by the manufacturer for achieving the best result for the substrate under the project conditions.

3.03 INSTALLATION

A. Install in accordance with manufacturer's instructions, in manner that maintains roofing weather integrity.

3.04 CLEANING

A. Clean installed work to like-new condition.

3.05 PROTECTION

A. Protect installed products until completion of project.

B. Touch-up, repair or replace damaged products before Substantial Completion.

END OF SECTION

SECTION 07 9200 – JOINT SEALANTS

PART 1 - GENERAL

1.01 THE REQUIREMENT

A. Furnish and install caulking and sealing as indicated these Specifications.

1.02 SUBMITTALS

A. Submittals shall be furnished in accordance with Section 01 3300 – Submittal Procedures.

B. Indicate manufacturers and brand names, colors available and locations where each will be used.

1.03 QUALITY ASSURANCE

A. Comply with requirements of the general conditions except as noted below.

B. Guarantee all work of this Section for a period of 2 years.

C. Guarantee all work against water leaks, air infiltration, sagging and pulling loose.

D. Guarantee shall include replacement and/or repair of other work damaged by water leakage in caulking and sealant work.

1.04 PRODUCT DELIVERY, STORAGE AND HANDLING

A. Deliver sealants in original sealed containers, each bearing manufacturer's name and product designation.

B. Do not retain at the job site material, which has exceeded the shelf life recommended by its manufacturer.

PART 2 - MATERIALS

2.01 SEALANTS

A. Types 1 to 4 Sealants: Polyurethane sealants conforming to Federal Specification TT-S-00227E Type II & ANSI A116.1.
   1. Type 1 Sealant: Two part 30-40 Shore A, non-sag
      a. Manufacture Sikaflex – 2C or ENGINEER-approved equal
   2. Type 2 Sealant: Two part, 35-45 Shore A, self-leveling.
   3. Type 3 Sealant: Two part, 20-35 Shore A, self-leveling.
   4. Type 4 Sealant: Two part, 20-35 Shore A, non-sag.

B. Type 5 Sealant: One component, elastomeric gun grade polyurethane sealant conforming to ASTM C920, Type S, Grade NS, Class 25. Use NT, M, A, G, and I Federal Specifications TT-S-00230C Type 2, Class A.
   1. Manufacturer: Sonneborn Sonolastic NP 1 or ENGINEER-approved equal.

2.02 ACCESSORIES

A. Primers: As specified by sealant manufacturer

B. Backup Materials: Closed cell polyethylene foam

C. Bond Breaker: Polyethylene film.

2.03 COLOR

A. Color for each location of use shall be as selected by OWNER and in accordance with the contract documents. Non-availability of a required color within a particular brand of otherwise approved material shall not act to relieve obligation to furnish material of required color and conforming to specifications.

B. Colors shall be selected to best blend with adjoining materials.

PART 3 - EXECUTION

3.01 LOCATIONS FOR SEALANT TYPES

A. Type 1 Sealant: Use for all interior and exterior construction, expansion joints, etc. associated with sealing the joints in the concrete tanks

B. Type 2 Sealant: Except as hereinafter specified, use for all interior and exterior horizontal joints subject to foot traffic.

C. Type 3 Sealant: Except as hereinafter specified, or where Type 1 sealant is required, use for all exterior horizontal joint.

D. Type 4 Sealant: Use for all exterior vertical surfaces.

E. Type 5 Sealant: Use for all interior work except where Type 1 sealant is required.

F. Caulk and seal all open joints, both interior and exterior; at junction of metal frames and walls; at other locations as noted on drawings.

G. Generally, expansion joints in exterior concreted flatwork on grade, curbs, and gutter for sitework, etc.; joint fillers will not require a joint sealant. Where sealant is noted on drawings for such joints, sealant shall be Type 1 and a bond breaker shall be installed along top of joint filler, full width of joint, to present contact between sealant and joint filler.

3.02 SEALANT AND JOINT DETAILS

A. Joint Sizes:
   1. Types 1, 2, 3 and 4 Sealants:
      a. Minimum joint size: ¼-inch x ¼-inch
      b. Depth to width ration of joint shall be a recommended by sealant manufacturer.
      c. Maximum width: Sealant manufacturer’s recommended maximum.
   2. Type 4 Sealant: Maximum joint size shall be 3/8-inch x ½-inch.

B. Joints deeper than above shall have backup material installed to maintain specified depth.

C. With Types 1, 2, 3 and 4 sealants, a bond breaker shall be installed, unless backup material is used, so that sealant bonds only sides of joints.

3.03 SEALANT INSTALLATION

A. Carefully and thoroughly clean surfaces with cleaner, and in matter recommended by sealant manufacturer.

B. Prime surfaces where recommended by sealant manufacturer.

C. Apply sealants smoothly and uniformly. Mask surfaces each side of joints to protect adjacent surface and to form straight, even edges.

END OF SECTION 07 9200

SECTION 08 1100 – METAL DOORS AND FRAMES

PART 1 – GENERAL

1.01 THE REQUIREMENT

A. Furnish and install steel doors, frames, and related items, complete, operable, including all finish hardware, and all appurtenant work, complete and operable, in accordance with the requirements of the Contract Documents.

1.02 REFERENCE SPECIFICATIONS, CODES AND STANDARDS

A. Commercial Standards:
   1. ASTM A366 – Specification for Steel, Carbon, Cold-Rolled Sheet, Commercial Quality
   2. ANSI A115 Series – Door and Frame Preparation
   3. UL – Underwriters' Laboratories, Inc.

B. Trade Standards: National Association of Architectural Metal Manufacturers (NAAMM) or Steel Door Institute (SDI).

C. Manufacturers' Standards: In addition to the standards listed above, the steel doors and frames and their installation shall be in accordance with the manufacturer's published recommendations and specifications.

1.03 SUBMITTALS

A. Submittals shall be in accordance with Section 01 3300 – Submittal Procedures.

B. Shop Drawings: Shop drawings shall show details of the products and systems and connections to adjoining materials. Schedules showing sizes, types, and locations of door louvers and glass shall be submitted along with manufacturer's installation instructions.

1.04 PRODUCT DELIVERY, STORAGE AND HANDLING

A. Doors and frames shall be shipped and stored with temporary stiffeners and spacers in place to prevent distortion.

B. Doors and frames shall be delivered in original, unbroken packages, containers or bundles bearing the name of the manufacturer.

C. Doors and frames shall be carefully stored on wood blocking in an area that is protected from the elements. Storage shall be in a manner that will prevent damage or marring of finish.

PART 2 – PRODUCTS

2.01 MATERIALS AND FABRICATION - GENERAL

A. Shop Fabrication and Assembly: All steel doors and frames shall be shop fabricated and shop assembled, where possible. Temporary stiffeners, spacers, and other accessories necessary to facilitate handling and accurate erection shall be provided. After fabrication, all tool marks and other surface imperfections shall be filled and ground smooth.

B. Fire Rating and Labeling: Doors and frames specified or shown as fire-rated shall bear a UL label indicating the type of rating for which certified. Designs and construction of such products shall have specific UL approval according to current procedures for the specified fire rating, either 3-hour, 1½-hour, ¾-hour or 20-minute as shown. Hollow steel doors and frames for fire-rated openings shall conform to UL listing and shall be UL labeled.

C. Materials for Doors and Frames: All hollow metal doors and frames shall be fabricated entirely from prime quality, commercial grade, cold-rolled steel conforming to ASTM A366, Type II or III.

D. Priming and Painting: Doors and frames shall be chemically treated to ensure maximum paint adhesion and shall have all exposed surfaces painted with a rust-inhibitive primer after fabrication.

E. Hardware: Doors and frames shall be reinforced and drilled or tapped for fully templated hardware; and shall be reinforced with plates for surface-mounted hardware, meeting ANSI A115 Series requirements. Hardware shall be as specified in these Specifications and/or as shown.

2.02 METAL FRAMES

A. Pressed Metal Frames: Pressed steel frames for doors and other openings shall be combination buckled frame and trim of type and sizes as shown. Metal shall not be lighter than 16-gauge steel. Frames shall be of the welded unit type. Special frames, oversized frames and frames with transom shall be provided where shown.

2.03 FRAME ANCHORS

A. Floor Anchors: Floor anchors shall be welded inside each frame jamb head, and holes shall be provided for floor anchorage. Minimum thickness of floor anchors shall be 14-gauge.

B. Anchors for Masonry/Concrete Installations: Frames for installation in masonry and/or concrete walls shall be provided with variable jamb anchors of the T-strap, stirrups and strap or wire type. The number of anchors provided per frame jamb and head shall be as follows:

1. Frames up to 7 feet 6 inches in height: Three (3) anchors.
2. Frames over 7 feet 6 inches to 8 feet 0 inches in height: Four (4) anchors.
3. Frames over 8 feet 0 inches in height: One (1) anchor for each 2 feet 0 inches or fraction in height.
4. Frame head anchors shall be not less than those required in these Specifications.

2.04 SILENCER HOLES

A. Appropriate holes for silencers shall be provided in the doorframes, which are not designated to receive weather stripping, seals, or sound seals.

2.05 STEEL DOORS

A. Design and Construction: Steel doors shall be of hollow metal construction and shall be of full flush design with no visible seams. Face sheets shall be not less than cold-rolled, stretcher-leveled, 18-gauge steel. All doors shall have flush seamless face sheets with continuously and fully welded seam edges. Doors shall be rigid and neat in appearance, and shall be free from warpage or buckle. Corner bends shall be true and straight and shall be of not less than the minimum radius for the gage of metal used. The door top and bottom shall be internally reinforced by steel members welded in place. Tops of exterior doors shall be provided with flush, water and weather tight, top enclosures.

B. Transom Panels: Transom panels shall be provided where shown and shall be of construction same as doors.

C. Door and Transom Cores: Doors and transom cores shall be water-resistant honeycomb with minimum R of four (4) mineral/fiberboard. Fire rated doors shall be solid or mineral fiberboard core doors as required to meet code and Reference Standard’s requirements.

D. Louvers (where applicable): Door louvers for steel doors shall be of steel of the type, which integrally frames the opening and can attach securely. Louvers shall be of the inverted "Y" blade type for exterior use and "V" blade for interior use. Exterior louvered openings shall be provided with removable type insect screens. Door louvers shall be uniformly located in doors and shall be of sizes shown. Louvers at labeled doors shall be equipped with concealed fusible links.

E. Double Doors: Double doors shall be provided with a "T" type steel astragal unless otherwise specified.

F. Manufacturers or ENGINEER-approved Equal:
   1. Forderer Cornice Works
   2. Krieger Steel Products Co.
   3. Overly Manufacturing Co.
   4. Dean Steel Mfg.
   5. Curries

PART 3 – EXECUTION

3.01 CONSTRUCTION

A. General: All work shall be in accordance with manufacturer's published recommendations and specifications.

B. All work shall be coordinated with appropriate related subcontractor’s work to assure a proper installation. Field conditions and dimensions shall be verified prior to fabrication.

3.02 FRAME INSTALLATION

A. Frames shall be set plumb and square in a true plane, and be securely anchored to the adjoining construction. Steel shims shall be provided and shall be set tight and rigidly attached between frame anchors and structure. All finished metal frames shall be strong and rigid; neat in appearance and square, true and free of defects, warp or buckle.

B. Molded members, trims and stops, shall be clean cut, straight and shall be of a uniform profile throughout their lengths.

C. Corner joints shall have all contact edges tightly closed with all trim faces mitered, welded, and finished smooth. The use of gussets will not be permitted.

3.03 DOOR INSTALLATION

A. Doors shall be installed plumb, square, and level. Doors shall operate freely, but not loosely. They shall be free from rattling while in a closed position.

B. The door clearances shall be plus 3/32-inch or minus 1/32-inch and shall not exceed the limits specified in the manufacturers printed recommendations.

C. Any door that becomes warped more than 3/16-inch out-of-plane shall be replaced.

D. Doors and door's finish hardware shall have hardware protected prior to painting as specified.

3.04 FINISH HARDWARE

A. Finish hardware shall be installed in accordance with hardware manufacturer's standard templates and printed instructions. Operable parts shall be adjusted for correct function and operation.

3.05 EXISTING CONSTRUCTION

A. Frames that are dimpled for fasteners required for installation into previously placed (existing) concrete, masonry or steel structures shall have the fasteners and fastener frame dimples filled with auto putty or an ENGINEER-approved equal filler material. The fasteners and fillers at dimple holes shall be ground smooth (non-visible) before painting. Fastener locations shall not be visible after the painting work is finished.

END OF SECTION

SECTION 08 5113 – ALUMINUM WINDOWS

PART 1 – GENERAL

1.01 SECTION INCLUDES

A. Related Documents: Drawings and general provisions of the Contract, including General and Conditions and these Specifications, apply to this section.

B. This Section includes commercial grade aluminum window units of the performance class indicated. Window types required include:
   1. Fixed windows.
   2. Sliding window (Transaction window)

C. Performance Requirements: Provide windows engineered, fabricated, and installed to withstand normal thermal movement, wind loading, and impact loading without failure, as demonstrated by testing manufacturer's standard window assemblies representing types, grades, classes, and sizes required for Project according to test methods indicated.

D. Testing shall demonstrate compliance with requirements indicated in AAMA 101 for air infiltration, water penetration, and structural performance for type, grade, and performance class of windows required. Where required design pressure exceeds the minimum for the specified window grade, comply with AAMA 101, Section 3, "Optional Performance Classes."

E. Test Criteria: Testing shall be performed by a qualified independent testing agency based on the following criteria:
   1. Design wind velocity at Project site is 70 mph (113 km/h).
   2. Heights of window units above grade at window centerline are indicated on or can be determined from the Drawings. Consult with the Architect, if necessary, to confirm required loading and test pressures.
   3. Test Procedures: Test window units according to ASTM E283 for air infiltration, ASTM E547 for water penetration, and ASTM E330 for structural performance.

F. Submittals: Submit the following:
   1. Submittals shall be made in accordance with Section 01 3300 – Submittal Procedures.
   2. Product Data for each type of window required, including construction details and fabrication methods; profiles and dimensions of individual components; data on hardware, accessories, and finishes. Include recommendations for maintaining and cleaning exterior surfaces.
   3. Shop Drawings showing fabrication and installation of each type of window required. Include layout and installation details, elevations at ¼-inch = 1 foot (1:50) scale, typical window unit elevations at ¾-inch = 1 foot (1:20) scale, and full-size section details of typical composite members.
   4. Samples for initial color selection on 12-inch- (300-mm-) long sections of window members. Where finishes involve normal color variations, include Sample sets showing the full range of variations expected.
   5. Test reports from a qualified independent testing agency indicating that each type, grade, and size of window unit complies with performance requirements indicated. Test results based on use of down-sized test units will not be accepted.

G. Quality Assurance:
   1. Installer Qualifications: Engage an experienced Installer who has completed installation of aluminum windows similar in design and extent to those required for the project and whose work has resulted in construction with a record of successful in service performance.

2. Standards: Requirements for aluminum windows, terminology and standards of performance, and fabrication workmanship are those specified and recommended in AAMA 101 and applicable general recommendations published by AAMA.
3. Single Source Responsibility: Provide aluminum window units from one source and produced by a single manufacturer.

H. Project Conditions:
1. Field Measurements: Check actual window openings by accurate field measurement before fabrication. Show recorded measurements on final shop drawings. Coordinate fabrication schedule with construction progress to avoid delay of work.
a. Where necessary, proceed with fabrication without field measurements, and coordinate fabrication tolerances to ensure proper fit of window units.

PART 2 – PRODUCTS

2.01 MATERIALS

A. Manufacturers: The following may be provided:
1. EFCO Corporation
2. Graham Architectural Products Corp.
3. Kawneer Company, Inc.
4. Torrance Aluminum Window Co.
5. Old Castle Glass
6. or ENGINEER-approved equal

B. Aluminum Extrusions: Alloy and temper recommended for strength, corrosion resistance, and application of required finish, but not less than 22,000-psi (150-MPa) ultimate tensile strength and not less than 0.062 inch (1.6 mm) thick at any location for main frame and sash members. The main frame shall be not less than 2" depth.

C. Fasteners: Aluminum, nonmagnetic stainless steel, epoxy adhesive, or other materials warranted to be noncorrosive and compatible with window members, trim, hardware, anchors, and other components.
1. Where fasteners screw anchor into aluminum less than 0.125 inch (3.2 mm) thick, reinforce interior with aluminum or nonmagnetic stainless steel to receive screw threads or provide standard, noncorrosive, pressed-in, splined grommet nuts.
2. Except for application of hardware, do not use exposed fasteners. For application of hardware, use fasteners that match finish of member or hardware being fastened, as appropriate.

D. Anchors, Clips, and Window Accessories: Aluminum, nonmagnetic stainless steel, or zinc-coated steel complying with ASTM B633 and of sufficient strength to withstand design pressure indicated.

E. Hardware: Aluminum, stainless steel, or other corrosion-resistant material compatible with aluminum and of sufficient strength to perform the function for which it is intended.
1. Four-Bar Friction Hinges: Comply with AAMA 904.1.
a. Friction Shoes: Nylon or other nonabrasive, non-staining, noncorrosive, durable material.
2. Limit Device: Manufacturer's standard, concealed friction adjustor, adjustable stay bar, limit device designed to restrict ventilator opening.

F. Accessories: Manufacturer's standard accessories that comply with indicated standards.
1. Weather-stripping: Sliding-type weather-stripping where sash rails slide horizontally or vertically along unit frame. Provide compression-type weather-stripping at perimeter of each operating sash where sliding type is inappropriate.

G. Provide weather stripping locked into extruded grooves in sash.

1. Pole Operators: One pole operator and pole hanger for every room that has operable windows more than 72 inches (1800 mm) above floor. Fabricate pole of tubular-shaped anodized aluminum with rubber cap at lower end and standard push-pull hook at top. Provide sufficient length for window operation without reaching more than 60 inches (1500 mm) above floor.

H. Sliding Transaction Windows: Comply with requirements of AAMA/WDMA/CSA 101/I.S.2/A440 – 05 and manufacturer's standard locking/operating
   1. Hardware: Equipment and operating hardware as follows:
      a. Concealed plunger lock in the meeting rail with a flush mounted actuating handle.
      b. Sash shall ride on steel ball bearing rollers and a raised track, so dirt will not interfere with normal operation.
   2. Deal tray or shelf: 16-gauge stainless steel, pre-drilled for exterior mounting, and match window width dimension.

I. Projected Windows: Comply with requirements of AAMA Rating P-HC65. Window units shall successfully pass hardware load test requirements specified in AAMA 101. Provide tubular vents.
   1. Hardware: Equipment and operating hardware as follows:
      a. Hinges: Concealed 4-bar friction hinges with adjustable slide shoe (2 per ventilator).
      b. Lock: Pole-operated, cam-action, sweep lock handle and keeper.
      c. Limit Device: Stay bar with adjustable hold-open device.

J. Fabrication: Window units to comply with indicated standards. Include a complete system for assembly of components and anchorage of window units.
   1. Provide units that are reglazable without dismantling sash or ventilator framing.
   2. Prepare window sash or ventilators for glazing except where pre-glazing at the factory is indicated.
   3. Weepholes: Provide weepholes and internal passages to conduct infiltrating water to the exterior.
   4. Mullions: Provide mullions and cover plates as shown, matching window units, complete with anchors for support to structure and installation of window units. Allow for erection tolerances and provide for movement of window units due to thermal expansion and building deflections, in the manner indicated.
   5. Compensation channels: Provide compensation channels with anchors for window units as shown, of profile and dimensions indicated but not less than 0.062-inch-(1.6-mm-) thick extruded aluminum. Miter or cope corners, and weld and dress smooth with concealed mechanical joint fasteners. Finish to match window units. Provide compensation channels capable of withstanding design loads of window units.
   6. Glazing Stops: Provide screw applied or snap on glazing stops, coordinated with glass selection and glazing system indicated. Finish glazing stops to match window units.

K. Pre-glazed Fabrication: Pre-glaze window units where possible and practical. Comply with glass and glazing requirements of these Specifications and AAMA 101.

L. Finishes: Comply with NAAMM "Metal Finishes Manual." Finish designations prefixed by AA conform to the system established by the Aluminum Association for designating aluminum finishes.

M. Aluminum Finishes:
   1. General: Comply with NAAMM’s “Metal Finishes Manual for Architectural and Metal Products for recommendations relative to applying and designating finishes.

2. Appearance of Finished Work: Variations in appearance of abutting or adjacent pieces are acceptable if they are within one-half of the range of approved samples. Noticeable variations in the same piece are not acceptable. Variations in appearance of other components are acceptable if they are within the range of approved samples and are assembled or installed to minimize contrast.
3. Finish designations prefixed AA conform to the system established by the Aluminum Association for designating aluminum finishes.
4. High-Performance Organic Finish: AA-C12C42R1x (Chemical Finish: cleaned with inhibited chemicals; Chemical Finish: acid-chromate-fluoride-phosphate conversion coating; Organic Coating: as specified below). Prepare, pretreat, and apply coating to exposed metal surfaces to comply with coating and resin manufacturers' written instructions.
   a. Fluoropolymer Three-Coat System: Manufacturer's standard three-coat, thermo-cured system consisting of specially formulated inhibitive primer, fluoropolymer color coat, and clear fluoropolymer topcoat, with both color coat and clear topcoat containing not less than 70 percent polyvinylidene fluoride resin by weight; complying with AAMA 2605.
   b. Color and Gloss: As selected by CONTRACTOR from manufacturer's full range.

PART 3 – EXECUTION

3.01 GENERAL

A. Inspection: Inspect openings before installation. Verify that rough opening is correct and sill plate is level.

B. Installation: Comply with manufacturer's recommendations for installing window units, hardware, operators, and other components. Set windows plumb, level, and true to line, without warp or rack of frames or sash. Anchor securely in place.
   1. Separate aluminum and other corrodible surfaces from sources of corrosion or electrolytic action.

C. Set sill members and other members in a bed of sealant or with joint fillers or gaskets to provide weathertight construction. Coordinate installation with wall flashings and other components of the Work.

D. Field Quality Control: Conduct on-site tests with window manufacturer's representative present. The Architect will select units to be tested. Testing shall be performed by a qualified independent testing agency selected by the Architect.
   1. Air-Infiltration Tests: Conduct according to requirements of ASTM E783. Allowable infiltration shall not exceed 1.5 times the amount indicated.
   2. Water-Resistance Tests: Conduct according to requirements of ASTM E1105. No water leakage is permitted.
   3. Window units not meeting specified requirements and units having similar deficiencies shall be corrected at no cost to the Owner.

E. Adjust operating sash and hardware to provide tight fit at contact points and weather-stripping for smooth operation and a weathertight closure.

F. Clean aluminum promptly after installing windows. Avoid damage to finishes. Remove excess glazing and sealant compounds, dirt, and other substances. Lubricate hardware and other moving parts.

G. Clean glass of pre-glazed units promptly after installing windows.

H. Protect installed aluminum windows to ensure that they are without damage or deterioration at the time of Substantial Completion.

END OF SECTION

SECTION 08 7100 – DOOR HARDWARE

PART 1 – GENERAL

1.01 THE REQUIREMENT

A. Furnish and install all finish hardware and appurtenant work, complete and operable, in accordance with the Contract Documents. The CONTRACTOR shall also coordinate final finish hardware selection with the OWNER.

B. The work hereunder shall include all fabrication and mounting templates as needed for fabricators and for control of application of metal items.

C. In addition, provide and install all trim, attachments and fastenings specified or required for proper and complete installation. The work of this Section shall include all hardware that is not specified in other Sections, whether or not such hardware is herein specifically scheduled.

D. Protect the finish hardware from damage during construction, painting, and clean-up.

1.02 REFERENCE SPECIFICATIONS, CODES AND STANDARDS

A. Codes: All codes, as referenced herein, are specified in Section 01 4219 – Reference Standards.

B. Commercial Standards:
   1. Underwriters' Laboratories, Inc. Requirements and Approvals
   2. Hardware Institute (DHI): "Recommended Procedure for Processing Hardware Schedules and Templates" and "Architectural Hardware Scheduling and Format"
   3. BHMA: Builders Hardware Manufacturers Association

C. Manufacturers Standards: In addition to the standards listed above, the finish hardware and its installation shall be in accordance with the manufacturer's published recommendations and specifications.

1.03 SUBMITTALS

A. Submittals shall be furnished in accordance with Section 01 3300 – Submittal Procedures.

B. Samples: The samples of all items requested shall be furnished by the hardware supplier no later than 10 days after said request is received.

1.04 PROPRIETARY DESIGNATIONS

A. Manufacturer's product names, numbers and models are given herein for the purpose of indicating the requirements for the type, general construction, material, and operation of the specific item, not with the intention of limiting the item to the manufacturer's listed product. Substitution of another manufacturer's product that is fully equivalent in all respects may be made subject to the approval of the ENGINEER. Detailed and complete data shall be supplied as required to facilitate appropriate evaluation of all proposed substitute items.

1.05 PACKING, MARKING AND DELIVERY

A. All locks, exit devices, door closers, overhead door holders, hinges, kick plates, pulls and push plates, thresholds, and other similar items shall be individually packed in separate, suitable, original, containers as furnished by the hardware manufacturers. Each container shall be clearly marked with item numbers, article numbers, and names corresponding to those listed in the hardware schedule.

B. Small miscellaneous items that would not require specific location identifications, such as door stops, coat and hat hooks and door silencers may be quantity packed if properly labeled with item numbers and other identification.

C. Hardware shall be checked upon delivery with the aid of a representative of the hardware supplier's firm. Proper storage of all hardware will be required until ready for application.

PART 2 – PRODUCTS

2.01 GENERAL

A. Finish hardware shall be coordinated with all other work requiring builder's hardware or attaching to it. Copies of schedules, templates, etc., shall be furnished in ample time to avoid fabrication and construction delays. Each item of hardware shall be identified according to the approved list and schedule. All hardware shall be made to template.

B. All hardware furnished in connection with doors bearing UL Labels or where necessary to meet special requirements shall be in strict accordance with conditions established by the authority having jurisdiction and shall be subject to approval of that authority.

C. Hand of lock shall be as shown. If door hand is changed during construction, necessary changes shall be made at no extra cost.

D. Exit doors shall be operable at all times from the inside without the use of key or any special knowledge or effort.

E. Approved shop drawings from those trades with which hardware must be coordinated shall be provided to the hardware supplier. After checking these shop drawings, necessary template information shall promptly be supplied to all concerned as may be required to facilitate the progress of the job. All procedures for template information shall be in accordance with the handbook, "Recommended Procedure for Processing Hardware Schedules and Templates."

F. Finish of all hardware shall be 630-brush stainless steel unless otherwise specified in the hardware schedule.

G. Approved Manufacturers:
   1. Locks: Best, Sargent, Schlage
   2. Exit Devices: Precision, Sargent, Von Duprin
   3. Closers: LCN, Sargent, Norton
   4. Or ENGINEER-approved equal.

PART 3 – EXECUTION

3.01 GENERAL

A. All required items of hardware, including cylinders for locks, and all fitting, adjusting, and securing of each item neatly and firmly in place, shall be in perfect working order. Any work less than this shall form a basis for corrective measures.

B. All finish hardware shall be provided with paint protection prior to painting work. The paint protection shall be removed after completion of the painting work and the finish hardware cleaned and polished.

3.02 HARDWARE SCHEDULE

A. The hardware schedule is arranged for convenience of locating hardware and does not preclude in any way the requirements that all necessary hardware shall be furnished and properly installed. Hardware not specifically called out shall be similar to that required for similar uses.

B. The catalog numbers referred to in the hardware schedule are taken from catalogs of the manufacturers listed. They are used only to establish the quality and type of hardware to be used. Hardware equal in quality and utility will be accepted provided it conforms in operation, quality, weight, size, workmanship, and finish to the products hereinafter described. All component parts of locksets shall be the product of one manufacturer.

3.03 LATCHES AND BOLTS

A. Latches and bolts shall be installed, to automatically engage in keepers, whether activated by closers or by manual push. In no case should additional manual pressure be required to engage latch or bolt in keepers.

3.04 CLOSERS AND HINGES

A. Closers and hinges shall be carefully adjusted to operate the doors noiselessly and evenly, and hinges shall be installed so as not to bind. Closers, closer arms, and hold-open arms shall be attached with sex bolts.

B. Except at exterior doors, closers shall not be mounted on corridor or vestibule side of door.

3.05 WEATHER-STRIPPING AND SEALS

A. All doors shall be provided with weather-stripping or seals unless mutes, product weather-stripping or other special seals are specified. Whenever two types of seals are shown on the Finish Hardware Schedule on a given door they both are to be provided.

3.06 PROTECTIVE TAPE AND COATINGS

A. Strippable coating, removable tape protection or other approved means shall be provided to prevent any damage or staining of hardware during construction. Such protective measures shall be removed prior to final cleaning and the hardware polished before the acceptance of the project.

END OF SECTION

SECTION 08 8000 – GLAZING

PART 1 – GENERAL

1.01 SUMMARY

A. This Section includes glazing for the following products, including those specified in other Sections where glazing requirements are specified by reference to this Section:
   1. Storefront units.
   2. Vision lites and windows.
   3. Entrances and other doors.

B. Related Sections:
   1. Section 08 11 00 - Metal Doors and Frames
   2. Section 08 51 13 - Aluminum Windows

C. Definitions: Manufacturer is used in this Section to refer to a firm that produces primary glass or fabricated glass as defined in the referenced glazing standard.

D. System Performance Requirements:
   1. General: Provide glazing systems that are produced, fabricated, and installed to withstand normal thermal movement, wind loading, and impact loading (where applicable), without failure including loss or glass breakage attributable to the following: defective manufacture, fabrication, and installation; failure of sealants or gaskets to remain watertight and airtight; deterioration of glazing materials; and other defects in construction.
   2. Glass Design: Glass thicknesses indicated on Drawings are for detailing only. Confirm glass thicknesses by analyzing Project loads and in-service conditions. Provide glass lites for the various size openings in the thicknesses and strengths (annealed or heat-treated) to meet or exceed the following criteria:
      a. Minimum glass thickness, nominally, of lites in exterior walls is 6.0 mm (0.23 inch).
      b. Minimum glass thicknesses of lites, whether composed of annealed or heat-treated glass, are selected so the worst-case probability of failure does not exceed the following:

E. Determine minimum thickness of monolithic annealed glass according to ASTM E 1300. For other than monolithic annealed glass, determine thickness per glass manufacturer's standard method of analysis including applying adjustment factors to ASTM E 1300 based on type of glass.
   1. Normal thermal movement results from the following maximum change (range) in ambient and surface temperatures acting on glass-framing members and glazing components. Base engineering calculation on materials' actual surface temperatures due to both solar heat gain and nighttime sky heat loss.
      a. Temperature Change (Range): 120 deg F (67 deg C), ambient; 180 deg F (100 deg C), material surfaces.

F. Submittals:

   1. Submittals shall be furnished in accordance with Section 01 33 00 – Submittal Procedures.
   2. Product data for each glass product and glazing material indicated.
   3. Samples for verification purposes of 12-inch-square samples of each type of glass indicated except for clear monolithic glass products, and 12-inch-long samples of each color required (except black) for each type of sealant or gasket exposed to view. Install sealant or gasket sample between two strips of material representative in color of the adjoining framing system. If requested.
   4. Product certificates signed by glazing materials manufacturers certifying that their products comply with specified requirements.

a. Separate certifications are not required for glazing materials bearing manufacturer's permanent labels designating type and thickness of glass, provided labels represent a quality control program of a recognized certification agency or independent testing agency acceptable to authorities having jurisdiction.

5. Compatibility and adhesion test reports from sealant manufacturer indicating that glazing materials were tested for compatibility and adhesion with glazing sealants. Include sealant manufacturer's interpretation of test results relative to sealant performance and recommendations for primers and substrate preparation needed for adhesion.
6. Product test reports for each type of glazing sealant and gasket indicated, evidencing compliance with requirements specified.
7. Maintenance data for glass and other glazing materials to include in Operating and Maintenance Manual specified in Division 1.

G. Quality Assurance:
1. Glazing Publications: Comply with CBC Standard No. 54-1 "Glass Standard Specifications." Comply with published recommendations of glass product manufacturers and organizations below, except where more stringent requirements are indicated. Refer to these publications for glazing terms not otherwise defined in this Section or in referenced standards.
   a. FGMA Publications: "FGMA Glazing Manual."
2. Safety Glass: Products complying with ANSI Z97.1 and testing requirements of 16 CFR Part 1201 for Category II materials. Comply with CBC Standard No. 54-2.
   a. Subject to compliance with requirements, provide safety glass permanently marked with certification label of Safety Glazing Certification Council (SGCC) or other certification agency acceptable to authorities having jurisdiction.
3. Fire-Resistive Glazing Products for Door Assemblies: Products identical to those tested per ASTM E 152, labeled and listed by UL or another testing and inspecting agency acceptable to authorities having jurisdiction.
4. Fire-Resistive Glazing Products for Window Assemblies: Products identical to those tested per ASTM E 163, labeled and listed by UL or another testing and inspecting agency acceptable to authorities having jurisdiction.
5. Glazier Qualifications: Engage an experienced glazier who has completed glazing similar in material, design, and extent to that indicated for Project with a record of successful in-service performance.
6. Single-Source Responsibility for Glass: Obtain glass from one source for each product indicated below:
   a. Primary glass of each (ASTM C 1036) type and class indicated.
   b. Heat-treated glass of each (ASTM C 1048) condition indicated.
7. Single-Source Responsibility for Glazing Accessories: Obtain glazing accessories from one source for each product and installation method indicated.
8. Preconstruction Compatibility and Adhesion Testing: Submit to sealant manufacturers, samples of each glass, gasket, glazing accessory, and glass-framing member that will contact or affect glazing sealants for compatibility and adhesion testing as indicated below:
   a. Use test methods standard with sealant manufacturer to determine if priming and other specific preparation techniques are required for rapid, optimum glazing sealants adhesion to glass and glazing channel substrates.

H. Perform tests under normal environmental conditions during installation.
1. Submit not less than nine pieces of each type and finish of glass-framing members and each type, class, kind, condition, and form of glass (monolithic, laminated, insulating units) for adhesion testing, as well as one sample of each glazing accessory (gaskets, setting blocks and spacers) for compatibility testing.

2. Schedule sufficient time to test and analyze results to prevent delay in the Work.
3. Investigate materials failing compatibility or adhesion tests and get sealant manufacturer's written recommendations for corrective measures, including using special primers.
4. Testing is not required when glazing sealant manufacturer can submit required preparation data that is acceptable to University's Representative and is based on previous testing of current sealant products for adhesion to and compatibility with submitted glazing materials.

I. Delivery, Storage, and Handling: Protect glazing materials to comply with manufacturer's directions and as needed to prevent damage to glass and glazing materials from condensation, temperature changes, direct exposure to sun, or other causes.

J. Project Conditions: Environmental Conditions: Do not proceed with glazing when ambient and substrate temperature conditions are outside the limits permitted by glazing materials manufacturer or when glazing channel substrates are wet from rain, frost, condensation, or other causes.

K. Warranty:
1. General: Warranties specified in this Article shall not deprive the Owner of other rights the Owner may have under other provisions of the Contract Documents and will be in addition to and run concurrent with other warranties made by the Contractor under requirements of the Contract Documents.
2. Manufacturer's Warranty on Coated Glass Products: Submit written warranty signed by coated glass manufacturer agreeing to furnish replacements for those coated glass units that deteriorate as defined in "Definitions" article, f.o.b. point of manufacture, freight allowed Project site, within specified warranty period indicated below. Warranty covers only deterioration due to normal conditions of use and not to handling, installing, and cleaning practices contrary to glass manufacturer's published instructions.
a. Warranty Period: Manufacturer's standard but not less than 5 years after date of Substantial Completion.

PART 2 – PRODUCTS

2.01 GLASS PRODUCTS

A. Tempered Glass: Tempered glass, conforming to CBC Section 2406, shall be of the various types and thicknesses as specified or indicated. Tempered glass shall be cut to shape and size before tempering, and shall not be cut or trimmed after tempering. Lights not of proper shape and size shall not be used. Except for lights having one dimension greater than 72 inches, tong marks shall be on one of the shorter edges. Where holes are required, limiting requirements, as to size and spacing and location in relation to edges and corners, shall be in accordance with recommendation of the glass manufacturer. Edges which shall be exposed in finished work shall be polished; other edges shall be seamed.
1. Heat-Treated Float Glass: ASTM C 1048; Type I (transparent glass, flat); Quality q3 (glazing select).

B. Wire Glass: ASTM C 1036, Type II (patterned and wired glass, flat), Class 1 (clear), Quality q8 (glazing); ¼" thick nominal; of form and mesh pattern indicated below: Wired Glass
1. Polished Wired Glass: Form 1 (wired, polished both sides), and as follows:
a. Mesh m2 (square).
2. Available Manufacturers: Subject to compliance with requirements, manufacturers offering wired glass products that may be incorporated in the Work include the following companies.
a. LOF "Crossweld"

b. Mississippi “Baroque”
c. Or equal.

C. Interior glazing: ¼” thick clear, tempered (wire glass where required).

D. Exterior Glazing: 1/4" thick tinted Solex, tempered where required.

E. Privacy Glazing (at bathrooms): 1/4" thick tempered patterned/obsure lite. Pattern as selected by architect from manufacturer’s standard.
1. Guardian
2. Or equal

F. Mirrored glazing: ¼” thick mirrored glazing. Include ½” wide stainless steel frame, cut and mitered to fit mirror.

G. Ceramic-Coated Spandrel Glass: ASTM C 1048, Condition B (spandrel glass, one-surface ceramic coated), Type I (transparent glass, flat), Quality q3 (glazing select), and complying with other requirements specified.
1. Fallout Resistance: Provide spandrel units identical to those passing the fallout-resistance test for spandrel glass specified in ASTM C 1048.

H. Elastomeric Glazing Sealants:
1. General: Provide products of type indicated, complying with the following requirements:
a. Compatibility: Select glazing sealants and tapes of proven compatibility with other materials they will contact, including glass products, seals of insulating glass units, and glazing channel substrates, under conditions of installation and service, as demonstrated by testing and field experience.
b. Suitability: Comply with sealant and glass manufacturer's recommendations for selecting glazing sealants and tapes that are suitable for applications indicated and conditions existing at time of installation.
c. Colors: Provide color of exposed joint sealants to comply with the following:

I. Provide selections made by University’s Representative from manufacturer's full range of standard colors for products of type indicated.
1. Elastomeric Glazing Sealant Standard: Provide manufacturer's standard chemically curing, elastomeric sealants of base polymer indicated that comply with ASTM C 920 requirements indicated on each Elastomeric Glazing Sealant Product Data Sheet at the end of this Section, including those referencing ASTM classifications for Type, Grade, Class and Uses.
a. Additional Movement Capability: Where additional movement capability is specified in Elastomeric Glazing Sealant Product Data Sheet, provide products, when tested for adhesion and cohesion under maximum cyclic movement per ASTM C 719, with the capability to withstand the specified percentage change in the joint width existing at time of installation and remain in compliance with other requirements of ASTM C 920 for uses indicated.
2. Glazing Sealant for Fire-Resistant Glazing Products: Identical to product used in test assembly to obtain fire-resistive rating.

J. Miscellaneous Glazing Materials:
1. General: Provide products of material, size, and shape complying with referenced glazing standard, requirements of manufacturers of glass and other glazing materials involved for glazing application indicated, and with a proven record of compatibility with surfaces contacted in installation.
2. Cleaners, Primers and Sealers: Type recommended by sealant or gasket manufacturer.
3. Setting Blocks: Elastomeric material with a Shore A durometer hardness of 85 plus or minus 5.

4. Spacers: Elastomeric blocks or continuous extrusions with a Shore A durometer hardness required by glass manufacturer to maintain glass lites in place for installation indicated.

PART 3 – EXECUTION

3.01 EXAMINATION

A. Examine glass framing, with glazier present, for compliance with the following:
   1. Manufacturing and installation tolerances, including those for size, squareness, offsets at corners.
   2. Presence and functioning of weep system.
   3. Minimum required face or edge clearances.
   4. Effective sealing between joints of glass-framing members.
   5. Do not proceed with glazing until unsatisfactory conditions have been corrected.

B. Preparation: Clean glazing channels and other framing members receiving glass immediately before glazing. Remove coatings that are not firmly bonded to substrates.

C. Glazing, General:
   1. Comply with combined recommendations of manufacturers of glass, sealants, gaskets, and other glazing materials, except where more stringent requirements are indicated, including those in referenced glazing publications.
   2. Glazing channel dimensions as indicated on Drawings provide necessary bite on glass, minimum edge and face clearances, and adequate sealant thicknesses, with reasonable tolerances. Adjust as required by Project conditions during installation.
   3. Protect glass from edge damage during handling and installation as follows:
      a. Use a rolling block in rotating glass units to prevent damage to glass corners. Do not impact glass with metal framing. Use suction cups to shift glass units within openings; do not raise or drift glass with a pry bar. Rotate glass lites with flares or bevels on bottom horizontal edges so edges are located at top of opening, unless otherwise indicated by manufacturer's label.
      b. Remove damaged glass from Project site and legally dispose of off site. Damaged glass is glass with edge damage or other imperfections that, when installed, weaken glass and impair performance and appearance.
   4. Apply primers to joint surfaces where required for adhesion of sealants, as determined by preconstruction sealant-substrate testing.
   5. Install elastomeric setting blocks in sill rabbets, sized and located to comply with referenced glazing standard, unless otherwise required by glass manufacturer. Set blocks in thin course of compatible sealant suitable for heel bead.
   6. Do not exceed edge pressures stipulated by glass manufacturers for installing glass lites.
   7. Provide spacers for glass sizes larger than 50 united inches (length plus height) as follows:
      a. Locate spacers inside, outside, and directly opposite each other. Install correct size and spacing to preserve required face clearances, except where gaskets and glazing tapes are used that have demonstrated ability to maintain required face clearances and comply with system performance requirements.
      b. Provide 1/8-inch minimum bite of spacers on glass and use thickness equal to sealant width. With glazing tape, use thickness slightly less than final compressed thickness of tape.
   8. Provide edge blocking to comply with requirements of referenced glazing publications, unless otherwise required by glass manufacturer.
   9. Set glass lites in each series with uniform pattern, draw, bow, and similar characteristics.

D. Sealant Glazing (Wet):

1. Install continuous spacers between glass lites and glazing stops to maintain glass face clearances and to prevent sealant from extruding into glass channel weep systems until sealants cure. Secure spacers in place and in position to control depth of installed sealant relative to edge clearance for optimum sealant performance.
2. Force sealants into glazing channels to eliminate voids and to ensure complete wetting or bond of sealant to glass and channel surfaces.
3. Tool exposed surfaces of sealants to provide a substantial wash away from glass. Install pressurized gaskets to protrude slightly out of channel to eliminate dirt and moisture pockets.

E. Protection and Cleaning:
1. Protect exterior glass from breakage immediately after installation by attaching crossed streamers to framing held away from glass. Do not apply markers to glass surface. Remove nonpermanent labels, and clean surfaces.
2. Protect glass from contact with contaminating substances resulting from construction operations including weld splatter. If, despite such protection, contaminating substances do come into contact with glass, remove them immediately as recommended by glass manufacturer.
3. Examine glass surfaces adjacent to or below exterior concrete at frequent intervals during construction, but not less than once a month, for build-up of dirt, scum, alkali deposits, or stains, and remove as recommended by glass manufacturer.
4. Remove and replace glass that is broken, chipped, cracked, abraded, or damaged in any way, including natural causes, accidents and vandalism, during construction period.
5. Wash glass on both faces in each area of Project not more than 4 days prior to date scheduled for inspections that establish date of Substantial Completion. Wash glass as recommended by glass manufacturer.

END OF SECTION

SECTION 08 9100 – LOUVERS

PART 1 – GENERAL

1.01 SECTION INCLUDES

A. Louvers, frames, and accessories.

1.02 REFERENCE STANDARDS

AAMA 611	Voluntary Specification for Anodized Architectural Aluminum; American Architectural Manufacturers Association
AAMA 2604	Voluntary Specification, Performance Requirements and Test Procedures for High Performance Organic Coatings on Aluminum Extrusions and Panels
AAMA 2605	Voluntary Specification, Performance Requirements and Test Procedures for Superior Performing Organic Coatings on Aluminum Extrusions and Panels
AMCA 500-L	Laboratory Methods of Testing Louvers for Rating; Air Movement and Control Association International, Inc.
AMCA 511	Certified Ratings Program Product Rating Manual for Air Control Devices
ASTM A653/A653M	Steel Sheet, Zinc-Coated (Galvanized) or Zinc-Iron Alloy-Coated (Galvannealed) by the Hot-Dip Process
ASTM A666	Annealed or Cold-Worked Austenitic Stainless Steel Sheet, Strip, Plate, and Flat Bar
ASTM B209	Aluminum and Aluminum-Alloy Sheet and Plate
ASTM B209M	Aluminum and Aluminum-Alloy Sheet and Plate [Metric]
ASTM B221	Aluminum and Aluminum-Alloy Extruded Bars, Rods, Wire, Profiles, and Tubes
ASTM B221M	Aluminum and Aluminum-Alloy Extruded Bars, Rods, Wire, Profiles, and Tubes [Metric]

1.03 SUBMITTALS

A. See Section 01 3300 – Submittal Procedures.

B. Product Data: Provide data describing design characteristics, maximum recommended air velocity, design free area, materials, and finishes.

C. Shop Drawings: Indicate louver layout plan and elevations, opening and clearance dimensions, tolerances; head, jamb, and sill details; blade configuration, screens, blank-out areas required, and frames.

D. Samples: Submit two samples 2 by 2 inches in size illustrating finish and color of exterior and interior surfaces.

E. Test Reports: Independent agency reports showing compliance with specified performance criteria.

F. Manufacturer's Certificate: Certify that products meet or exceed specified requirements.

G. Maintenance Data: Include lubrication schedules, and adjustment requirements.

1.04 QUALITY ASSURANCE

A. Manufacturer Qualifications: Company specializing in manufacturing products of the type specified in this section, with minimum three years of documented experience.

1.05 WARRANTY

A. Provide twenty-year manufacturer warranty against distortion, metal degradation, and failure of connections.

PART 2 – PRODUCTS

2.01 MANUFACTURERS

A. Wall Louvers:
   1. Airolite Company, LLC
   2. American Warming and Ventilating
   3. Construction Specialties, Inc
   4. Pottorff
   5. Or ENGINEER-approved equal.

2.02 LOUVERS

A. Louvers: Factory fabricated and assembled, complete with frame, mullions, and accessories; AMCA Certified in accordance with AMCA 511.
   1. Wind Load Resistance: Design to resist positive and negative wind load of 25 psf without damage or permanent deformation.
   2. Intake Louvers: Design to allow maximum of 0.01 oz/sq. ft water penetration at calculated intake design velocity based on design air flow and actual free area, when tested in accordance with AMCA 500-L.
   3. Drainable Blades: Continuous rain stop at front or rear of blade aligned with vertical gutter recessed into both jambs of frame.
   4. Screens: Provide insect screens at intake louvers and bird screens at exhaust louvers.
   5. Hinged Units: Provide secondary frame to which louver frame is attached; non-ferrous hinges.

B. Stationary Louvers: Horizontal blade, extruded aluminum construction, with intermediate mullions matching frame.
   1. Free Area: 50 percent, minimum.
   2. Static Pressure Loss: 0.15 inch wg maximum per square foot of free area at velocity of 1000 fpm, when tested in accordance with AMCA 500-L.
   3. Blades: Straight.
   4. Frame: 4 inches deep, channel profile; corner joints mitered and, with continuous recessed caulking channel each side.
   5. Metal Thickness: Frame 0.081 inch; blades 0.081 inch.
   6. Finish: Color anodized; finish welded units after fabrication.
   7. Color: As scheduled.

C. Operable Louvers: Operable horizontal blades, extruded aluminum construction.
   1. Free Area: 50 percent, minimum.
   2. Static Pressure Loss: 0.15 inch wg maximum per square foot of free area at velocity of 1000 fpm, when tested in accordance with AMCA 500-L.
   3. Operation: Gravity balanced, 90-degree opening. with adjustment device to permit setting for varying differential static pressure.
   4. Operation: Actuator provided in HVAC control system.
   5. Movable Blades: Straight, pivoted at, with vinyl, rubber, or polyethylene blade edge and jamb seals; rattle-free linkage.
   6. Fixed Blades: Straight.
   7. Frame: 4 inches deep, channel profile; corner joints mitered and, with continuous recessed caulking channel each side.

8. Metal Thickness: Frame 0.081 inch; blades 0.081 inch.
9. Finish: Color anodized; finish welded units after fabrication.
10. Color: As scheduled.

D. Acoustical Louvers: Horizontal blade, formed aluminum sheet construction.
1. Sound Attenuation: Minimum sound transmission loss of 10 db at 63 Hz, when tested in accordance with ASTM E90.
2. Free Area: 50 percent, minimum.
3. Static Pressure Loss: 0.15 inch wg maximum per square foot of free area at velocity of 1000 fpm, when tested in accordance with AMCA 500-L.
4. Blades: Straight, sloped at 45 degrees, with insulating material in cavity, lower surface covered with perforated sheet metal of same type as blades.
5. Metal Thickness: Frame 0.081 inch; blades 0.081 inch.
6. Finish: Color anodized; finish welded units after fabrication.

2.03 MATERIALS

A. Extruded Aluminum: ASTM B221 (ASTM B221M)
1. Color Anodizing: AAMA 611 Class I, AA-M12C22A42/44.
2. Clear Anodizing: AAMA 611 Class I, AA-M12C22A41.

B. Formed Aluminum: Formed sheet, ASTM B209 (ASTM B209M).
1. Color Anodizing: AAMA 611 Class I, AA-M12C22A42/44.
2. Clear Anodizing: AAMA 611 Class I, AA-M12C22A41.

C. Steel Sheet: Hot-dipped galvanized steel sheet, ASTM A653/A653M, with G90/Z275 coating.

D. Stainless Steel: ASTM A666 Type 304, soft temper, smooth surface, No. 4 finish.

E. Bird Screen: Interwoven wire mesh of steel, 0.063-inch diameter wire, ½-inch open weave, diagonal design.

F. Insect Screen: 18 x 16 size aluminum mesh.

G. Polyvinylidene Fluoride Coating: Minimum 70 percent Kynar 500/Hylar 500 resin, two-coat finish, complying with AAMA 2604.

H. Primer: Zinc chromate, alkyd type.

2.04 ACCESSORIES

A. Blank-Off Panels: Same material as louver, painted black on exterior side; provide where duct connected to louver is smaller than louver frame, sealing off louver area outside duct.

B. Screens: Frame of same material as louver, with reinforced corners; removable, screw attached; installed on inside face of louver frame.

C. Fasteners and Anchors: Galvanized steel.

D. Flashings: Of same material as louver frame, formed to required shape, single length in one piece per location.

PART 3 – EXECUTION

3.01 EXAMINATION

A. Verify that prepared openings and flashings are ready to receive work and opening dimensions are as indicated on shop drawings.

B. Verify that field measurements are as indicated.

3.02 INSTALLATION

A. Install louver assembly in accordance with manufacturer's instructions.

B. Coordinate with installation of flashings by others.

C. Install louvers level and plumb.

D. Align louver assembly to ensure moisture shed from flashings and diversion of moisture to exterior.

E. Secure louver frames in openings with concealed fasteners.

F. Install perimeter sealant and backing rod in accordance with manufacturer’s instructions, unless instructed otherwise.

G. Coordinate with installation of mechanical ductwork.

H. Coordinate with installation of louver actuators.

3.03 ADJUSTING

A. Adjust operable louvers for freedom of movement of control mechanism. Lubricate operating joints.

3.04 CLEANING

A. Strip protective finish coverings.

B. Clean surfaces and components.

3.05 SCHEDULES

A. Aeration Building - South Wall: Intake acoustical louver, hinged bird screen, prefinished to match adjacent window frames.

END OF SECTION

SECTION 09 2200 – SUPPORTS FOR PLASTER AND GYPSUM BOARD

PART 1 – GENERAL

1.01 THE REQUIREMENT

A. Furnish and install furring and lath at Portland Cement plaster, sheet underlayment and related cement plaster and metal accessories in accordance with the Contract Documents.

1.02 RELATED WORK

A. Section 09 29 00 – Gypsum Board

1.03 SUBMITTALS

A. Submittals shall be furnished in accordance with Section 01 33 00 – Submittal Procedures.

B. Product Data: Manufacturer's published literature containing complete description for lath, metal accessories.

C. Samples Metal Accessories: As requested by ENGINEER.

1.04 QUALITY ASSURANCE

A. Regulatory Requirements: Comply with requirements of SFBC Article 25, except as otherwise specified.

B. Industry Standards: Comply with applicable requirements of ASTM C847 and ASTM C1068.

C. The manufacture shall provide a 2-year equipment warranty.

1.05 DELIVERY, STORAGE AND HANDLING

A. Protect metal lath, metal suspension materials and metal accessories from dampness or wetting.

B. Comply with the additional requirements specified in Section 01 62 00 – Product Options.

PART 2 – PRODUCTS

2.01 MANUFACTURERS

A. Furring and Lathing Materials: Amico, Cemco, United States Gypsum, Western Metal Lath or ENGINEER approved equal.

2.02 METAL COMPONENTS

A. Rib Lath: Expanded galvanized-steel sheets, 3.4 pounds per square yard, with 3/8-inch ribs and Kraft paper backing conforming to FS UU-B-790z, Type I, Grade D.

B. Flat Expanded Lath: ASTM C847; self-furring diamond mesh, 2.4 pounds per square yard. Provide with indentations 3½ inches horizontally and maximum 2 inches vertically, or with ¼-inch self-furring groove rolled lengthwise of sheet at maximum 6 inches on center, to hold mesh ¼-inch away from supporting surface.

C. Reinforcing Lath: Fabricate from copper-bearing steel and weighing not less than 2.5 pounds per square yard.

D. Metal Accessories:

1. General:
   a. Except as otherwise specified, products shall conform to material for accessories of ASTM C1063.
   b. Shapes Used as Grounds: Size and dimension to provide for required plaster thicknesses.

c. Flanges:
   1) Design to permit complete embedment of accessory in plaster thickness.
   2) Provide for alignment and attachment to underlying surface.
d. Provide in maximum possible lengths.
e. Where dimension or profile, is deferred to Drawings and information is not on the Drawings confer with ENGINEER to determine required dimension or profile.
f. Although several manufacturers are listed, endeavor to use products of a single manufacturer to the greatest extent possible.

2. Casing Beads: Model SFC by Stockton Products or ENGINEER approved equal.
3. External Corner Aids: Form from expanded-metal lath with flanges at least 2½ inches wide; "KwickCorner: with "EPKote" by K-Lath, Stockton Products or ENGINEER approved equal. Except where specified do not use corner beads.
4. External Corner Beads: Small, rigid nosed, not exceeding 3/16-inch, with expanded flange at least 2½ inches wide.
5. Control Joints:
   a. Return Lip Type with Removable Tape: No. XJ15-3 by Western Metal Lath or ENGINEER approved equal.
   b. Narrow "V" type, Model NVS by Stockton products or ENGINEER approved equal.
6. Expansion Joints: Variable, 2-piece No. 40 by Western Metal Lath or ENGINEER approved equal.
7. Drip Screed
8. Foundation: No. 7 by Stockton Products or ENGINEER approved equal.
   a. Soffit: No. 5 Drip by Stockton Products or ENGINEER approved equal.
   b. Soffit Vent: Stockton Products or ENGINEER approved equal. Width as indicated on the Drawings.
9. Reveals: As indicated on the Drawings.

E. Fasteners: Powder-driven fasteners and screws as recommended by finish material manufacturer.

F. Provide miscellaneous components required for completion of installation.

G. Protective Finishes: Galvanize all metal lath, furring and ferrous items, unless otherwise indicated.

1. Fabricate metal lath and furring from galvanized sheet steel complying with ASTM A 653.
2. Galvanize inserts, hangers, channels and other similar items by the hot-dip process ASTM A 123.
3. Touch up abraded protective finishes with one (1) coat of rust-inhibitive primer at site before installation.

H. Tie Wire: ASTM A 641 0.0625-inch nominal diameter minimum (No. 16 W&M gauge).

2.03 UNDERLAYMENT AND FLASHING

A. Sheet Underlayment: Asphalt-saturated Kraft paper complying with FS UU-B-790a, Type I, Grade D, Style 2, 60-minute; "Super Jumbo Tex" by Fortifiber Corp. or ENGINEER approved equal.

PART 3 – EXECUTION

3.01 EXAMINATION

A. Examine supporting structure and conditions under which metal lath and furring will be installed.

B. Verify that support framing is spaced in accordance with code requirements.

3.02 INSTALLATION OF UNDERLAYMENT AND FLASHING

A. Sheet Underlayment:

1. Apply one (1) layer of specified underlayment over sheathing.
   a. Securely staple to substrate.
   b. Apply horizontally over entire surface in shingle fashion, lapping courses minimum 3 inches.
   c. Stagger vertical joints.
2. Install additional layer of underlayment paper in 19-inch-wide strip at internal and external building corners. Saddle over top of parapets and walls.
3. Lap vertical joints minimum 6 inches.
4. Securely staple to substrate.

3.03 INSTALLATION OF METAL LATH

A. General: Comply with requirements of “Plaster and Lathing Systems Manual.”

1. Install furring and lathing in accordance with ASTM C 1063.
2. Install interior furring and lathing in accordance with ASTM C 841.

B. Rib Lath:

1. Install at soffits and similar horizontal surfaces.
2. Secure to framing backup with screws or staples, keeping away from surface of paper underlayment.
3. Stagger ends of lath to avoid continuous joints on same support. Lap ends at supports.
4. Lap at sides at least ½-inch and at ends at least 1-inch.

C. Flat Expanded Lath:

1. Apply lath over underlayment with long dimension at right angles to supports, attaching to each support at 6-inch intervals.
2. Secure with pan-head, noncorrosive screws of sufficient length to penetrate through underlayment if lath is not self-furring.
3. Stagger ends of lat to avoid continuous joints on same support. Lap ends at supports.
4. Lap at sides at least ½-inch and at ends at least 1-inch.

3.04 INSTALLATION OF METAL ACCESSORIES

A. General:

1. Fasten in place using wire ties, galvanized staples or power fasteners as required to prevent dislodging or misalignment by subsequent operations. Corner aid and control and reveal joints shall be wire tied or power fastened.
2. Fasten at both ends and maximum 12 inches on center along sides.
3. Bring grounding edge of accessories to true lines, plumb, level and straight.
4. Install accessories to provide required depth of plaster and to bring plaster surface to required plane.
5. Connect lengths of accessories to assure a continuous line.
6. Where plaster abuts dissimilar materials, terminate with plaster casing bead.

7. Install accessory beads to provide minimum 1/8-inch clearance between structural units and termination point of surface to receive plaster finish.
8. Provide diagonal strip reinforcing at corners of windows and other openings.

B. Control, Expansion and Reveal Joints:

1. Install at locations and at spacing shown on the Drawings by wire tying to metal lath. If not shown, space control joints, as directed by Architect or Engineer, so as to provide plaster panels not exceeding 144 square feet, with no dimension exceeding 18-feet or a length-to-width ratio of 2½:1.
2. Set control joints to serve as grounds for plaster.
3. Expansion Joints: Install double studs. Do not cut underlayment.

C. Cornerite:

1. Install at plastered interior angles where both converging wall surfaces are plastered.
2. Do not install:
   a. Where metal lath continues onto converging surfaces of an angle at least 4 inches.
   b. Where juncture of abutting surfaces is to be unrestrained.
3. Fasten along outer edges of lat only to secure firmly in position.
4. Fasten to lath only not to structural framing.

D. Corner Beads: Provide at plastered external angles where plastered on both sides of angles.

E. External Corner Aids: Provide at external angles where plastered on both sides of angles.

F. Weep Screeds:

1. Install foundation weep screed at bottom of walls.
2. Install soffit weep screed where indicated on the Drawings.

END OF SECTION

SECTION 09 2900 – GYPSUM BOARD

PART 1 – GENERAL

1.01 THE REQUIREMENT

A. Furnish and install all the gypsum wallboard finish complete with related metal components, accessories, and finish surfaces in accordance with the Contract Documents.

1.02 SUBMITTALS

A. Submittals shall be furnished in accordance with Section 01 3300 – Submittal Procedures.

B. Test Reports: Submit copies of fire test report on fire rated wallboard assemblies. Submit copies of evidence of fire hazard classification for wallboard. Certified test reports of other acceptable testing agencies, which perform testing in accordance with ASTM E119, E84 and E90 are acceptable.

C. Certificates: Furnish manufacturer's certification that materials meet or exceed Specification requirements.

D. Manufacturer's Instruction: Furnish manufacturer's printed instructions for installation of assemblies.

E. Samples: Provide sample of texture finishes for Architect's approval.

1.03 QUALITY ASSURANCE

A. Manufacturers: Wallboard components shall be as manufactured by U.S. Gypsum Company, Domtar Gypsum, National Gypsum Company, Georgia-Pacific, or Flintkote Blue Diamond. It is intended that all materials furnished be a part of a single system, whether it be supplied by one or several manufacturers.

B. ASTM C840, C754, and GA216, insofar as any portions are applicable, are hereby made a part of this Specification as though repeated herein. In case of conflicts, the more stringent requirements shall govern.

C. The manufacture shall provide a 2-year equipment warranty.

1.04 PRODUCT DELIVERY, STORAGE AND HANDLING

A. Deliver wallboard materials in manufacturer's unopened containers, packages or bundles identified with manufacturer's name, brand, type, and grade. Store inside dry areas and protect from dampness and deterioration. Protect redi-mixed products from freezing and protect metal accessories from rusting. Remove damaged or deteriorated materials from the premises.

B. Deliver fire-rated materials bearing testing agency label and required fire classification number.

1.05 JOB CONDITIONS

A. Temperature and humidity conditions: Do not install wallboard unless installation areas comply with the minimum temperature and ventilation requirements recommended by the manufacturer.

B. Protection: Protect work installed by other trades previous to work under this Section. Replace any work damaged without added cost. Provide closures for exterior openings, where required. Room temperature during installation of wallboard shall not be less than 50°F with adequate ventilation maintained to eliminate excessive moisture until joint compound is completely dry. Protect wallboard from wetting and replace any damaged material.

C. Provide ventilation during and following adhesives and joint treatment applications. Use temporary air circulators in enclosed areas lacking natural ventilation. Under slow drying conditions, allow additional drying time between coats of joint treatment. Protect installed materials from drafts during hot, dry weather.

PART 2 – PRODUCTS

2.01 GYPSUM WALLBOARD

A. Regular Wallboard: ASTM C36 or FS SS-L-30, Type III, Grade R, Class I 5/8-inch thickness, tapered edge.

B. Fire Rated Wallboard: ASTM C36, Type X or FS SS-L-30, Type III, Grade X, Class I 5/8-inch thickness, tapered edge.

C. Water Resistant Wallboard: ASTM C630, Type X, Grade R, 5/8-inch thickness, tapered edge.

D. Backing Board: ASTM C442, Type X, Grade R or FS SS-L-30, Type IV, Grade R or X, Class I 5/8-inch thickness, square, tongue and grooved edge.

E. Exterior Wallboard: U.S. Gypsum Company exterior gypsum ceiling board, ½-inch thickness or conforming to ASTM C931.

2.02 GYPSUM ACCESSORIES

A. Corner Bead Reinforcement: ANS CB 114 x 114

B. Metal Edge Reinforcement: ANS L12 or L58; or ANS U12 or U58

C. Control Joint: U.S. Gypsum Company, No. 093

2.03 FASTENERS

A. Nails: Annular ring shank nail GWB 54, ASTM C514:

1. 1¼-inch for ½-inch wallboard
2. 13/8-inch for 5/8-inch wallboard or smooth shank nail
3. 13/8-inch for ½-inch wallboard
4. 1½-inch for 5/8-inch wallboard

B. Screws: Self-drilling, self-tapping, bugle head for use with power driven tool.

1. Type S for application to light gauge metal framing minimum 1-inch
2. Type 9-12 for application to heavy gauge metal framing conforming to ASTM C646
3. Type W for application to wood framing minimum 1½-inch single layer 15/8-inch double layer conforming to ASTM C894
4. Type G for wallboard to wallboard application minimum 1½-inch ASTM C893.

C. Staples: Number 16 USS gauge flattened galvanized wire staples with 7/16-inch wide crown outside measure and divergent point for first ply only of 2-ply gypsum wallboard application.

1. 1-inch long legs for 3/8-inch thick gypsum wallboard
2. 1-inch long legs for ½-inch thick gypsum wallboard
3. 1¼-inch long legs for 5/8-inch thick gypsum wallboard

2.04 LAMINATING ADHESIVES

A. Wallboard to Wood or Metal Framing: U.S. Gypsum Durabond 200 or 300 or conforming to ASTM C557 for wood framing.

B. Wallboard to Wallboard: U.S. Gypsum Durabond 600.

C. Wallboard to Coreboard or Sound Deadening Boards: U.S. Gypsum Durabond 600.

D. Wallboard to Concrete or Masonry: U.S. Gypsum Durabond 500.

2.05 SUSPENDED CEILING COMPONENTS

A. Furring Channels: Type DWC as manufactured by U.S. Gypsum Company or rigid furring channels conforming to ASTM C645.

B. Main Runner Channels: Cold rolled sections 1½-inch formed of No. 16 gauge steel painted with rust inhibiting paint.

C. Hanger Wires: Sizes specified double annealed and galvanized conforming to FS OO-W-461, Type I.

2.06 FINISHING MATERIALS

A. Joint treatment system shall be Perf-A-Tape joint system consisting of:
   1. Perf-A-Tape reinforcement tape
   2. Perf-A-Tape all-purpose ready-mixed compound for embedding, fill and finishing

B. Joint treatment system shall consist of:
   1. Joint tape shall be perforated conforming to ASTM C475 or FS SS-J-570, Type II
   2. Joint compound shall be powdered or ready-mixed conforming to ASTM C475 or FS SS-J-570, Type I. Taping and topping joint compound or all-purpose joint compound may be used.

2.07 TEXTURE FINISH

A. Wall texture material shall be light orange peel finish.

PART 3 – EXECUTION

3.01 INSTALLATION – SUSPENDED CEILINGS

A. Except where otherwise indicated, provide 1½-inch main runner channels spaced on 4-foot centers and metal furring channels spaced on not over 16-inch centers. Neither main runners nor cross furring shall be let into nor come in contact with abutting masonry walls or partitions. Locate a main runner within 6-inch of the wall to support the ends of the furring channels and locate hangers to support the ends of the main runners.

B. Where main runners or furring channels are spliced, overlap the ends not less than 8 inches and securely tie near each end of the splice with two (2) loops of 16-gauge galvanized wire.

C. Suspend main runners from structure above with one No. 9 hanger wire for each 12 square feet of ceiling area. All wire hangers shall be of such length so that the lower ends may be saddle tied or wrapped around the main runners so as to prevent turning or twisting of the runners.

D. At steel beams joists or other steel construction wrap hangers around, inset through or clip or bolt to the supports, so as to develop the full strength of the hangers.

E. For wood construction, inset wire hangers in holes drilled, a minimum of 3 inches above bottom of joists and with the upper end of the hanger in each case, twisted 3 times around itself or attach wire hangers to 30D nails, driven on a downward slant into sides of joists, allowing 3-inch penetration into the wood, driving nails at least 5 inches from bottom edges and not over 36 inches o.c. with the upper end of the hanger in each case twisted 3 times around itself or use four (4) 1½-inch No. 9 gauge wire staples, to secure hangers to the sides of the joists, driving staples horizontally or on a downward slant 3 inches near the upper edge of the loop and the fourth to fasten the loose end.

F. For cast-in-place concrete, install hanger wires in the formwork using double looped hangers. Special insets, at least equivalent in strength to the hangers to which the hangers can later be attached, may be inserted through, or attached to the top of the forms in lieu of anchoring the hangers directly in the concrete.

G. Securely clip metal furring channels to main runners using furring channel clips or saddle tie with 2 strands of 16-gauge tie wire. Install furring channel clips on alternate sides of the main runner channel.

H. Lights or other openings that interrupt the main runner or furring channels reinforce grillage with ¾-inch cold rolled channels, wire tied atop and parallel to the main runner channels.

I. Apply wallboard with long dimension at right angles to the furring channels, with all abutting ends and edges occurring over the web surface of the furring channel. Use wallboard of maximum possible length to minimize end joints. Neatly fit and stagger end joints. Install wallboard with 1-3/8-inch screws spaced 8 inches o.c. in the field of the board, at all bearings and along abutting edges. Install control joints as specified below for walls.

J. Where indicated for wallboard applied direct to bottom chord of steel joist, install rigid furring channels at right angles to joists located on 16-inch centers. Attach using clips or with two strands of 16-gauge tie wire.

3.02 INSTALLATION – WALLS

A. Apply wallboard with long dimension at right angles to framing or furring members with all abutting ends and edges occurring over stud flanges. Use wallboard of the maximum practical length to minimize end joints. Neatly fit and stagger end joints. Arrange joints on opposite sides of the partition so as to occur on different studs. Cut wallboard neatly to fit around all openings. The wallboard is to extend within ¼-inch of the floor.

B. Wherever wallboard terminates against dissimilar materials or where edges of wallboard are exposed, install metal edge reinforcement as specified. At all outside corners, install metal corner bead reinforcement as specified.

C. Install control joint over face of wallboard panels. Cut end joints square, butt together and align to provide neat fit. Attach control joint to wallboard with Bostitch 9/16” Type G Staples spaced not over 6 inches on center in each flange. Locate in accordance with USG Gypsum Construction Handbook, 2nd Edition.

D. At metal studs apply wallboard using screws spaced a maximum of 12 inches o.c. in the field of the board and 12 inches o.c. along the abutting end joints 8 inches o.c. at rated walls.

E. At wood framing, apply wallboard with double nailing method. Apply first nails spaced 12 inches o.c. with the second nails in close proximity (2 inches). Nails shall not be staggered on adjoining edges or ends. While the nails are being driven, hold the wallboard in firm contact with the underlying support. Nail from central portion of the wallboard toward ends and edges. Nails shall be driven home with the heads slightly below the surface of the wallboard, in a dimple formed by the driving tool stubbing the last blow. A nail set shall not be used and care shall be taken to avoid breaking the paper face.

F. Where W/R wallboard is used, coat all cut edges and fastener heads with USG sheetrock W/R sealant. Treat all cut edges, utility holes and joints, including those at angle intersections prior to installation. Treat fastener heads after installation.

G. Remove any excess of sealant or smears as work progresses.

H. Provide perimeter relief where non-load bearing wallboard partitions abut structural decks or ceilings or vertical structural elements. Allow not less than ¼-inch nor more than ½-inch gap between wallboard and structure. Finish edges of wallboard face layer with square nose metal casing head and caulk space between casing bead and structure with continuous sealant bead. Attach wallboard to studs not less than ½-inch below bottom edge of ceiling track flanges and to first stud adjacent to vertical tracks. Do not attach wallboard directly to tracks.

I. Where wallboard partitions intersect masonry walls, provide control joint no less than ¼-inch, nor more than ½-inch wide between wallboard and masonry. Finish exposed edges of wallboard with square nose metal casing bead and caulk space between casing bead and masonry with continuous sealant bead.

J. Install exterior ceiling board allowing 1/16-inch to 3/8-inch space between butt and ends of board. Fasten to supports with screws spaced 12 inches o.c. or nails spaced 8 inches o.c. For metal framing use 1-inch Type S screws. For wood framing use 1¼-inch Type W screws or 1½-inch galvanized box or aluminum nails. Conceal panel joints by installing panels with ends installed into aluminum H moldings. Fasten H moldings to support with screws spaced 12 inches o.c. or nails spaced 8 inches o.c.

3.03 FINISHING

A. Reinforce wall and ceiling angles and inside vertical corner angles with tape folded to conform to the adjoining surface and to form a straight, true angle. Apply a thin uniform layer of compound, approximately 3 inches wide, under and over the tape in the angle joint to be reinforced. Center tape over all joints to be reinforced and seal into the compound, leaving sufficient compound under the tape to provide proper bond. Apply a skim coat of compound immediately after embedding tape. Clean excess compound from the wallboard surface. After drying, cover embedding compounds with an additional coat of compound.

B. Allow joints to dry thoroughly (minimum 24 hours) between each application of compound.

C. All joints shall have tape embedded, filled, and finished using specified compound.

D. Cover fill coat with compound spread evenly over and slightly beyond the tapered edge of the board, feathered at the edges with a smooth uniform slight crown over the joint. All dimples at fastener heads shall receive 3 coats of compound in succession as used in joints.

E. Conceal flanges of all metal corner and edge reinforcing by at least 2 coats of compound. When completed, the compound shall extend approximately 8 inches to 10 inches on either side of the exposed metal nosing.

F. Sand all coats as necessary after each application of compound has dried. The final coat and subsequent sanding shall leave all wallboard and treated areas uniformly smooth and ready to receive the decoration, to the extent that after painting of wallboard there shall be no distinguishable difference in appearance between taped and untapped surface.

G. At areas of Wonderboard, fill all joints and corners with pre-sanded dry set or latex Portland Cement mortar into which embed a 2-inch-wide coated glass fiber tape using a skim coat of mortar.

H. Apply wall texture to all exposed walls, except walls to receive wall coverings and toilets, upon completion of finishing specified above. Surfaces shall be free of dust, dirt, and oil before application. Mix material in a clean power mixer with water in the ratio of 5 gallons per 45-pound bag for a period of 10 minutes. After mixing, add additional water to yield desired consistency. Use as heavy a mixture as practical and avoid over thinning of the material. Apply material using spray equipment capable of developing sufficient pressure to produce a fine sand texture finish.

END OF SECTION

SECTION 09 3000 - CERAMIC TILE

PART 1 - GENERAL

1.01 THE REQUIREMENT

A. Furnish and install all ceramic tile and related items, in accordance with the Contract Documents.

B. Color Selection for tile and grout by Owner.

1.02 SUBMITTALS

A. Submittals shall be furnished in accordance with Section 013300 – Submittals.

B. Furnish Master Grade Certificate for all tile before installation bearing the Certification Mark of the TCA, signed by the manufacturer stating the type and quantity of the material.

C. Furnish manufacturer's printed instructions for use of latex Portland Cement and mortar.

D. Extra stock: Provide 2 cartons of ceramic tile for future use.

1.03 QUALITY ASSURANCE

A. Standards: Materials, preparation and installation shall conform to ANSI Standards as listed and the detailed installation instructions of the material manufacturer insofar as applicable.

B. Installation of Ceramic Tile with Portland Cement Mortar: ANSI A 108.1

C. Installation of Ceramic Tile with Organic Adhesive: ANSI A 108.4

D. Installation of Ceramic Tile with Dry-Set Mortar: ANSI A 108.5

E. Referenced Specifications, insofar as any portions are applicable, are hereby made a direct part of this Specification as though repeated herein.

1.04 PRODUCE DELIVERY, STORAGE AND HANDLING

A. Deliver tile to the job in unopened cartons sealed with a grade seal-bearing name of manufacturer and the words "Standard Grade" printed thereon.

B. Manufactured mortars and grouts shall contain hallmark certifying compliance with referenced standards and be types recommended by tile manufacturer for specific applications.

C. Adhesives shall be in containers labeled with hallmark certifying compliance with referenced standards.

D. Organic adhesive containers to bear hallmark of either adhesive and sealant council or TCA certifying compliance with ANSI A 136.1.

E. Deliver mastic grout ready for use.

F. Delivery dry-set mortar in sealed, moisture proof containers.

G. Store materials under cover in manner to prevent damage or contamination.

1.05 JOB CONDITIONS

A. Set and grout tile in epoxy or Portland cement mortar when surface temperature is at least 50 degrees Fahrenheit and rising.

B. Comply with minimum temperature recommendations of manufacturer's for bonding and grouting materials in other than Portland cement mortar.

C. Protect adjoining work surfaces before tile work begins.

1.06 INSPECTION

A. Inspect surfaces to receive tile before staring installation. Notify the DESIGN/BUILDER in writing of any defects or conditions that will prevent satisfactory tile installation. Starting of work will imply acceptance of surfaces to receive tile.

B. Close areas in which tile is being set to traffic and other work. Keep closed until tile is firmly set, minimum time of 3 days. Protect tile work from damage until acceptance.

PART 2 - PRODUCTS

2.01 MATERIALS

A. All this shall be domestic manufacture, Standard Grade, meeting the requirements of SPR-R-61 of the U.S. Department of Commerce and shall comply with ANS A 137.1. TCA Certification mark shall appear on each carton label.

B. Floor tile shall be Standard Grade, Unglazed Dust Pressed Porcelain Type, not less than ¼-inch thick with cushion edges and in nominal face sizes of 2-inch x 2-inch in colors selected. Tile shall comply with Section 5.1 of ANSI A 137.1. Provide all necessary shapes and trimmers of similar tile as required.

C. Wall tile shall be Standard Grade Glazed Tile not less than 5/16 inches thick with cushion edges, a colored matt glazed finish and in nominal face sizes of 4¼-inch x 4¼-inch. Provide spacer lugs or other similar features on edges of tile. Tile shall comply with Section 6.1 of ANSI A 137.1. Provide a A3401 base member at junction of floor and at internal corners ABL/R 3401 and ACL/4 3401 as applicable. At restrooms, provide contrasting color tile band in accordance with interior elevations.

D. Portland Cement: ASTM C 150, Type I

E. Aggregate: ASTM C 144 for mortar and grout

F. Hydrate Lime: ASTM C 206 or C 207, Type S

G. Water: Potable

H. Reinforcing: 2-inch x 2-inch, 16/6 gauge welded wire mesh

I. Membrane: 15-pound felt or 4-mil polyethylene film, furnish and install under this Section.

J. Glazed Tile Grout: Provide samples

K. Floor Tile Grout: Hydroment colored to match tile or darker than tile as selected from samples by Owner.

L. Dry Set Mortar: ANSI A 118-1

M. Latex Portland Cement Mortar: ANSI A 118.4

N. Organic Adhesive: ANSI A 136.1, Type I

O. Expansion Joints: Includes control, contraction and isolation joints

P. Sealant: Two (2) components complying with ASTM C 920, Type M, Class 25, Grade NS for joints in vertical services; Grade P. Use T for joints in horizontal surfaces.

Q. Back-up: Flexible compressible type of closed cell foam polyethylene or butyl rubber, rounded at surface to contact sealant, as shown in TCA details and as recommended by sealant manufacturer. It shall fit neatly into the joint without compacting and to such a height to allow a sealant depth of ½ the width of the joint. Sealant shall not bond to the back up material.

PART 3 - EXECUTION

3.01 INSTALLATION

A. Floors:

1. Install floors using Portland Cement mortar in accordance with ANSI A 108.1 and TCA methods F-111-85 over precast concrete or F-112-85 over cast-in-place concrete. Membrane is to be furnished and installed as a part of the work of this Section, Method F-111 just prior to tile installation.
2. Install floors using dry set mortar in accordance with ANSI A 108.5 and TCA method F-113-85.
3. Grout tile with specified grout, slightly depressed.
4. Slope floors uniformly to floor drains where required.
5. Provide expansion joints, control joints, contraction joints and isolation joints in accordance with TCA Method EJ-711-85.

B. Walls:

1. Install wall tile in organic adhesive in accordance with ANSI A-108.4 and TCA methods W-242-85 (metal studs) or W-223-85 (masonry and concrete).
2. Align all joints in wall tile vertically and horizontally.
3. Grout all tile with specified grout.
4. Provide expansion joints, control joints, contraction joints and isolation joints in accordance with TCA Method EJ-711-85.
5. Expansion Joints include control, contraction and isolation joints
6. Provide joints in all ceramic tile surfaces in accordance with TCA method EJ-711-85.
7. Joint width shall be ¼-inch minimum. Joints through tile and mortar directly over structural joints in the backing must be at least the width of the structural joints.

C. Installation:

1. Set back up when mortar is placed or utilize removable wood strip to provide space for back up after mortar has cured.
2. Install sealant after tile work and grout are dry. Follow sealant manufacturer's recommendations.

3.02 CLEANING AND PROTECTION

A. Clean tile after grouting and protect from other trades. Cure all ceramic tile floors for a minimum of 72 hours.

END OF SECTION

SECTION 09 5113 – ACOUSTICAL PANEL CEILINGS

PART 1 – GENERAL

1.01 RELATED DOCUMENTS

A. Drawings and general conditions of Contract, including General and Supplementary Conditions and Divisions-1 Specification sections apply to work of this section.

1.02 SUMMARY

A. Section Includes:
   1. Acoustical ceiling panels.
   2. Exposed grid suspension system.
   3. Wire hangers, fasteners, main runners, cross tees, and wall angle moldings.

B. Alternates: Submittals which do not provide adequate data for the product evaluation will not be considered. The proposed substitution must meet all requirements of this section, including but not necessarily limited to, the following: Panel design, size, composition, color, and finish; Suspension system component profiles and sizes; Compliance with the referenced standards.

1.03 REFERENCES

A. American Society for Testing and Materials (ASTM):
   1. ASTM A 1008 Standard Specification for Steel, Sheet, Cold Rolled, Carbon, Structural, High-Strength Low-Alloy and High-Strength Low-Alloy with Improved Formability.
   2. ASTM A 641 Standard Specification for Zinc-Coated (Galvanized) Carbon Steel Wire.
   3. ASTM A 653 Standard Specification for Steel Sheet, Zinc-Coated (Galvanized) by the Hot-Dip Process.
   4. ASTM C 423 Sound Absorption and Sound Absorption Coefficients by the Reverberation Room Method.
   5. ASTM C 635 Standard Specification for Metal Suspension Systems for Acoustical Tile and Lay-in Panel Ceilings.
   6. ASTM C 636 Recommended Practice for Installation of Metal Ceiling Suspension Systems for Acoustical Tile and Lay-in Panels.
   7. ASTM E 84 Standard Test Method for Surface Burning Characteristics of Building Materials.
   8. ASTM E 1414 Standard Test Method for Airborne Sound Attenuation Between Rooms Sharing a Common Ceiling Plenum.
   9. ASTM E 1111 Standard Test Method for Measuring the Interzone Attenuation of Ceilings Systems.
   10. ASTM E 1264 Classification for Acoustical Ceiling Products.
   11. ASTM E 1477 Standard Test Method for Luminous Reflectance Factor of Acoustical Materials by Use of Integrating-Sphere Reflectometers.
   12. ASTM D 3273 Standard Test Method for Resistance to Growth of Mold on the Surface of Interior Coatings in an Environmental Chamber.
   13. ASTM E 119 Standard Test Methods for Fire Tests of Building Construction and Material.

1.04 SUBMITTALS

A. Submittals shall be furnished in accordance with Section 013300 - Submittals.

B. Product Data: Submit manufacturer's technical data for each type of acoustical ceiling unit and suspension system required.

C. Shop Drawings: Layout and details of acoustical ceilings. Show locations of items which are to be coordinated with, or supported by the ceilings.

D. Certifications: Manufacturer's certifications that products comply with specified requirements, including laboratory reports showing compliance with specified tests and standards. For acoustical performance, each carton of material must carry an approved independent laboratory classification of NRC, CAC, and AC.

1.05 QUALITY ASSURANCE

A. Single-Source Responsibility: Provide acoustical panel units and grid components by a single manufacturer.

B. Fire Performance Characteristics: Identify acoustical ceiling components with appropriate markings of applicable testing and inspecting organization.
   1. Surface Burning Characteristics: As follows, tested per ASTM E 84 and complying with ASTM E 1264 for Class A products.
      a. Flame Spread: 25 or less
      b. Smoke Developed: 50 or less

C. Handle acoustical ceiling units carefully to avoid chipping edges or damaged units in any way.

1.06 DELIVERY, STORAGE, AND HANDLING

A. Deliver acoustical ceiling units to project site in original, unopened packages and store them in a fully enclosed space where they will be protected against damage from moisture, direct sunlight, surface contamination, and other causes.

B. Before installing acoustical ceiling units, permit them to reach room temperature and a stabilized moisture content.

C. Handle acoustical ceiling units carefully to avoid chipping edges or damaged units in any way.

1.07 PROJECT CONDITIONS

A. Environmental Requires:
   1. Verify weathertightness of area receiving suspension system prior to installation.
   2. Wet trades work to be thoroughly dry and complete prior to installation.
   3. Installation to begin only when temperature and humidity conditions closely approximate interior conditions which will exist when area is complete and occupied.
   4. Heating and air conditioning systems to be operating prior to, during, and after installation.

1.08 WARRANTY

A. Acoustical Panel: Submit a written warranty executed by the manufacturer, agreeing to repair or replace acoustical panels that fail within the warranty period. Failures include, but are not limited to:
   1. Acoustical Panels: Sagging and warping
   2. Grid System: Rusting and manufacturer's defects

B. Warranty Period:
   1. Acoustical panels: Ten (10) years from date of substantial completion.
   2. Grid: Ten (10) years from date of substantial completion.
   3. Acoustical panels and grid systems with HumiGuard Plus or HumiGuard Max performance supplied by one source manufacturer is fifteen (15) years from date of substantial completion.

C. The Warranty shall not deprive the Owner of other rights the Owner may have under other provisions of the Contract Documents and will be in addition to and run concurrent with

other warranties made by the CONTRACTOR under the requirements of the Contract Documents.

1.09 MAINTENANCE

A. Extra Materials: Deliver extra materials to Owner. Furnish extra materials described below that match products installed. Packaged with protective covering for storage and identified with appropriate labels.
   1. Acoustical Ceiling Units: Furnish quality of full-size units equal to 5.0 percent of amount installed.
   2. Exposed Suspension System Components: Furnish quantity of each exposed suspension component equal to 2.0 percent of amount installed.

PART 2 – PRODUCTS

2.01 MANUFACTURERS

A. Ceiling Panels:
   1. Armstrong World Industries, Inc. or equal.

2.02 ACOUSTICAL CEILING UNITS

A. Acoustical Panels Type ACT-1:
   1. Surface Texture: Medium
   2. Composition: Mineral Fiber
   3. Color: White
   4. Size: 48in X 24in X 3/4in or as shown on the plans.
   5. Edge Profile: Square Lay-In for interface with Prelude ML 15/16" Exposed Tee.
   6. Noise Reduction Coefficient (NRC): ASTM C 423; Classified with UL label on product carton, 0.50.
   7. Ceiling Attenuation Class (CAC): ASTM C 1414; Classified with UL label on product carton, 35
   8. Articulation Class (AC): ASTM E 1111; Classified with UL label on product carton N/A.
   9. Flame Spread: ASTM E 1264; Class A (UL)
   10. Light Reflectance (LR): ASTM E 1477; White Panel: Light Reflectance: 0.87.
   11. Dimensional Stability: HumiGuard Plus - temperatures up to 120 degrees F and high humidity excluding only exterior use, use over standing water, and direct contact with moisture .
   12. Mold/Mildew Inhibitor: The front and back of the product have been treated with BioBlock, a paint that contains a special biocide that inhibits or retards the growth of mold or mildew, ASTM D 3273.
   13. Acceptable Product: Armatuff, 860 as manufactured by Armstrong World Industries or equal.

2.03 SUSPENSION SYSTEMS

A. Components: All main beams and cross tees shall be commercial quality hot-dipped galvanized (galvanized steel, aluminum, or stainless steel) as per ASTM A 653. Main beams and cross tees are double-web steel construction with type exposed flange design. Exposed surfaces chemically cleansed, capping pre-finished galvanized steel (aluminum or stainless steel) in baked polyester paint. Main beams and cross tees shall have rotary stitching (exception: extruded aluminum or stainless steel).
   1. Structural Classification: ASTM C 635 Intermediate Duty.
   2. Color: White and match the actual color of the selected ceiling tile, unless noted otherwise.
   3. Acceptable Product: Prelude ML 15/16" Exposed Tee as manufactured by Armstrong World Industries, Inc.

B. High Humidity Finish: Comply with ASTM C 635 requirements for Coating Classification for Severe Environment Performance where high humidity finishes are indicated.
   1. SS Prelude Plus by Armstrong World Industries, Inc. - 100% Type 304 STAINLESS Steel.
   2. AL Prelude Plus by Armstrong World Industries, Inc. - all ALUMINUM
   3. Prelude Plus XL Fire Guard by Armstrong World Industries, Inc., G-60 Hot dipped galvanized /aluminum capping
   4. Structural Classification: ASTM C 635 duty class.
   5. Color: By Architect and Owner

C. Attachment Devices: Size for five times design load indicated in ASTM C 635, Table 1, Direct Hung unless otherwise indicated.

D. Wire for Hangers and Ties: ASTM A 641, Class 1 zinc coating, soft temper, pre-stretched, with a yield stress load of at least time three design load, but not less than 12 gauge.

E. Edge Moldings and Trim: Metal or extruded aluminum of types and profiles indicated or, if not indicated, manufacturer's standard moldings for edges and penetrations, including light fixtures, that fit type of edge detail and suspension system indicated. Provide moldings with exposed flange of the same width as exposed runner.

F. Accessories.

PART 3 – EXECUTION

3.01 EXAMINATION

A. Do not proceed with installation until all wet work such as concrete, terrazzo, plastering and painting has been completed and thoroughly dried out, unless expressly permitted by manufacturer's printed recommendations. (Exception: HumiGuard Max Ceilings)

3.02 PREPARATION

A. Measure each ceiling area and establish layout of acoustical units to balance border widths at opposite edges of each ceiling. Avoid use of less than half width units at borders, and comply with reflected ceiling plans. Coordinate panel layout with mechanical and electrical fixtures.

B. Coordination: Furnish layouts for preset inserts, clips, and other ceiling anchors whose installation is specified in other sections.
   1. Furnish concrete inserts and similar devices to other trades for installation well in advance of time needed for coordination of other work.

3.03 INSTALLATION

A. Install suspension system and panels in accordance with the manufacturer's instructions, and in compliance with ASTM C 636 and with the authorities having jurisdiction.

B. Suspend main beam from overhead construction with hanger wires spaced 4-0 on center along the length of the main runner. Install hanger wires plumb and straight.

C. Install wall moldings at intersection of suspended ceiling and vertical surfaces. Miter corners where wall moldings intersect or install corner caps.

D. For reveal edge panels: Cut and reveal or rabbet edges of ceiling panels at border areas and vertical surfaces.

E. Install acoustical panels in coordination with suspended system, with edges resting on flanges of main runner and cross tees. Cut and fit panels neatly against abutting surfaces. Support edges by wall moldings.

3.04 ADJUSTING AND CLEANING

A. Replace damaged and broken panels.

B. Clean exposed surfaces of acoustical ceilings, including trim, edge moldings, and suspension members. Comply with manufacturer's instructions for cleaning and touch up of minor finish damage. Remove and replace work that cannot be successfully cleaned and repaired to permanently eliminate evidence of damage.

END OF SECTION

SECTION 09 5300 – ACOUSTICAL CEILING SUSPENSION ASSEMBLIES

PART 1 – GENERAL

1.01 SUMMARY

A. Section Includes:
   1. Suspended metal grid ceiling system.

1.02 REFERENCES

A. ACI – American Concrete Institute
   1. 355.2 – Qualification of Post-Installed Mechanical Anchors in Concrete

B. ASCE – American Society of Civil Engineers

C. SEI – Structural Engineering Institute
   1. 7 – Minimum Design Loads for Buildings and Other Structures

D. ASTM International
   1. A 641 – Zinc-Coated (Galvanized) Carbon Steel Wire
   2. A 653 – Steel Sheet, Zinc-Coated (Galvanized) by the Hot-Dip Process
   3. A 1008 – Steel, Sheet, Cold Rolled, Carbon, Structural, High-Strength Low-Alloy
   4. C 635 – Metal Suspension Systems for Acoustical Tile and Lay-in Panel Ceilings
   5. C 636 – Installation of Metal Ceiling Suspension Systems
   6. E 488 – Strength of Anchors in Concrete Elements
   7. E 580 – Installation of Ceiling Suspension Systems for Acoustical Tile and Lay-in Panels in Areas Subject to Earthquake Ground Motions
   8. E 1190 – Strength of Power-Actuated Fasteners Installed in Structural Members

E. IBC – 2018 International Building Code, 24 CCR Part 2.
   1. Chapter 1 – Structural Design

F. ICC-ES – ICC Evaluation Service, International Code Council
   1. AC70 – Acceptance Criteria for Fasteners Power-Driven into Concrete, Steel and Masonry Elements
   2. AC193 – Mechanical Anchors in Concrete Elements
   3. AC368 – Acceptance Criteria for Suspended Ceiling Framing Systems

1.03 SUBMITTALS

A. Product Data: Submit manufacturer's specifications listing dimensions, load carrying capacity and compliance with specified standards, with project conditions and materials clearly identified or detailed for each required system.

B. Test and Evaluation Reports: From ICC-ES

C. Manufacturers' Instructions: For installation

D. Qualification Statements: For installer

1.04 QUALITY ASSURANCE

A. Installer's Qualifications: A firm that has successfully completed a minimum of five (5) previous projects similar in nature, size, and extent to this Project; is familiar with special requirements indicated; and has complied with requirements of authorities having jurisdiction

1.05 FIELD CONDITIONS

A. Verify weather tightness of area to receive suspension system prior to installation.

B. Wet trades work to be thoroughly dry and complete prior to installation.

C. Installation to begin only when temperature and humidity conditions closely approximate interior conditions which will exist when area is complete and occupied.

D. Heating and air conditioning systems to be operating prior to, during, and after installation.

PART 2 – PRODUCTS

2.01 MANUFACTURERS Products of following manufacturers form basis for design and quality intended.

1. Armstrong World Industries Inc, Lancaster, PA (ICC-ES ESR-1289). Product: Prelude XL, 15/16.

B. Or equal as approved in accordance with Division 01, General Requirements for substitutions.

2.02 SUSPENSION SYSTEM MATERIALS

A. Grid: ASTM C635, Armstrong Prelude Heavy Duty XL 15/16".
   1. Main Runners:
      a. Armstrong: Heavy Duty Prelude XL 7301, exposed T
   2. Cross Tees – "Stake-on end", Stepped End:
      a. Armstrong: XL7328 (24-inch grid), XL7341 (48 inch grid)
   3. Edge Trim:
      a. Armstrong Angle Molding: 7800, 7/8", Prelude with adapter clip,

2.2.1 REGULATORY REQUIREMENTS

A. Comply with IBC.

B. Nonstructural components permanently attached to buildings, and their supports and attachments, shall be designed and constructed to withstand the effects of earthquake motions in accordance with ASCE/SEI 7 with all the modifications incorporated in IBC Section 1616A. The seismic design category shall be determined in accordance with IBC Section 1613A.

C. Post installed anchors in concrete used for component anchorage shall be pre-qualified for seismic applications in accordance with ACI 355.2 or ICC-ES AC193, except that anchors pre-qualified for seismic applications need not be governed by the steel strength of a ductile steel element.

D. Power actuated fasteners in concrete or steel shall not be used for sustained tension loads or for brace applications in Seismic Design Categories D, E, or F unless approved for seismic loading, except as follows:
   1. Power actuated fasteners may be used in concrete where the service load on any individual fastener does not exceed 90 lbs.
   2. Power actuated fasteners may be used in steel where the service load on any individual fastener does not exceed 250 lbs.

E. Metal suspension systems shall be designed in accordance with ASTM E 580 Section 5.2.8.8 and the requirements of IBC Section 1615A.1.16, 13.5.6.2.1 and 13.5.6.2.2, or be designed in accordance with ASCE/SEI 7 Section 13.2.1.1, or be seismically qualified in accordance with ASCE/SEI 7 Sections 13.2.5 or 13.2.6.

F. Metal suspension systems in Seismic Design Categories D, E, and F shall be designed and installed in accordance with ASTM C 635, ASTM C 636, and ASTM E 580, Section 5 as modified by IBC Section 1615A.1.16, 13.5.6.2.2.
   1. Exit Ways: Ceiling assemblies in exit Ways of hospitals and essential services buildings shall be installed with a main runner or cross runner surrounding all sides of each piece of tile, board or panel and each light fixture or grille. A cross runner that supports another cross runner shall be considered as a main runner for the purpose of structural classification. Splices or intersections of such runners shall be attached with through connectors such as pop rivets, screws, pins, plates with end tabs or other approved connectors.

2. Corridors and Lobbies: Expansion joints shall be provided in the ceiling at intersections of corridors and at junctions of corridors and lobbies or other similar areas.
3. Panels: Panels weighing more than 1/2 pounds per square foot shall be positively attached to the ceiling suspension runners.
4. Lateral force bracing: Lateral force bracing is required for all ceiling areas except that they shall be permitted to be omitted in rooms with floor areas 144 square feet or less when perimeter support in accordance with ASTM E 580 Sections 5.2.2 and 5.2.3 are provided and perimeter walls are designed to carry the ceiling lateral forces.
5. Ceiling fixtures: Fixtures shall be mounted in a manner that will not compromise ceiling performance.
    a. All recessed or drop-in light fixtures and grilles shall be supported directly from the fixture housing to the structure above with a minimum of two 12 gage wires located at diagonally opposite corners. Leveling and positioning of fixtures may be provided by the ceiling grid. Fixture support wires may be slightly loose to allow the fixture to seat in the grid system. Fixtures shall not be supported from main runners or cross runners if the weight of the fixtures causes the total dead load to exceed the deflection capability of the ceiling suspension system.
    b. Fixtures shall not be installed so that the main runners or cross runners will be eccentrically loaded.
    c. Surface-mounted fixtures shall be attached to the main runner with at least two positive clamping devices made of material with a minimum of 14 gage. Rotational spring catches do not comply. A 12 gage suspension wire shall be attached to each clamping device and to the structure above.
6. Partitions: Where the suspended ceiling system is required to provide lateral support for the permanent or relocatable partitions, the connection of the partition to the ceiling system, the ceiling system members and their connections, and the lateral force bracing shall be designed to support the reaction force of the partition from prescribed loads applied perpendicular to the face of the partition. Partition connectors, the suspended ceiling system and the lateral-force bracing shall all be engineered to suit the individual partition application and shall be shown or defined in the drawings or specifications.

2.03 PERFORMANCE CRITERIA

A. Metal suspension systems shall be qualified by current Evaluation Report from ICC-ES under AC368.

B. Main runners shall be classified as heavy duty in accordance with ASTM C 635.

2.04 MATERIALS

A. Steel Sheet: ASTM A 1008, CS Type B

B. Galvanized Steel Sheet: ASTM A 653, CS Type B, not less than G30 coating designation

C. Other Steel: Attachment devices and accessories shall be types and grades of steel as standard with manufacturer, in accordance with ICC-ES Evaluation Reports.

2.05 FABRICATION

A. Main and cross runners shall be inverted T-shape, double web, roll formed from minimum 0.018-inch-thick cold-rolled steel sheet, prepainted, or from galvanized steel sheet.

B. Provide manufacturer's standard edge moldings that fit acoustical panel edge details and suspension systems indicated and that match width and configuration of exposed runners unless otherwise indicated.

1. For edge moldings less than 2 inches wide, provide seismic clips as qualified by ICC ES Reports; Armstrong BERC 2, Chicago 1496, USG Donn ACM7, or approved equal.

C. Provide profiles and colors as noted in plans.

2.06 ACCESSORIES

A. Hanger Wire: ASTM A 641, Class 1 zinc coating, soft temper, size(s) to comply with requirements of ASCE/SEI 7 Section 13.5.6, ASTM C 636, and ASTM E 580, as applicable, but not less than 0.106 inch

B. Anchors: Fabricated from corrosion-resistant materials with holes or loops for attaching wire hangers and capable of sustaining, without failure, a load equal to 5 times that imposed by construction as determined by testing according to ASTM E 488 by an independent testing agency.
   1. Type: Post installed, expansion anchor.

C. Power Actuated Fasteners: Suitable for application indicated, fabricated from corrosion-resistant materials with clips or other devices for attaching hangers of type indicated, and capable of sustaining, without failure, a load equal to 10 times that imposed by construction as determined by testing according to ASTM E 1190 by an independent testing agency
   1. Power actuated fasteners shall be qualified by a current Evaluation Report, from ICC-ES, under AC70.

D. Miscellaneous Accessories: Manufacturer's standard accessory items including, but not limited to, support angles, corner caps, access angles, and moldings required for complete installation

PART 3 - EXECUTION

3.01 EXAMINATION Examine areas and substrates, with Installer present, and including cast-in anchors and structural framing, for compliance with requirements and other conditions affecting performance of the Work.

B. Proceed with installation only after unsatisfactory conditions have been corrected.

3.02 INSTALLATION

A. Install in accordance with ASTM C 636, ASTM E 580 as modified by IBC, and manufacturer's instructions.

B. Install suspension system components in sizes and spacings indicated on Drawings, but not less than those required by referenced installation standards for assembly types and other assembly components indicated.

C. Isolate suspension systems from building structure where they abut or are penetrated by building structure to prevent transfer of loading imposed by structural movement.
   1. Suspend hangers from building structure as follows:
   2. Install hangers plumb and free from contact with insulation or other objects within ceiling plenum that are not part of supporting structural or suspension system.
   3. Splay hangers only where required to miss obstructions and offset resulting horizontal forces by bracing, counters playing, or other equally effective means.
      a. Where width of ducts and other construction within ceiling plenum produces hanger spacings that interfere with locations of hangers required to support standard suspension system members, install supplemental suspension members and hangers in the form of trapezes or equivalent devices.
   4. Size supplemental suspension members and hangers to support ceiling loads within performance limits established by referenced installation standards.

5. Wire Hangers: Secure by looping and wire tying, either directly to structures or to inserts, eye screws, or other devices and fasteners that are secure and appropriate for substrate, and in a manner that will not cause hangers to deteriorate or otherwise fail.
6. Do not attach hangers to steel roof deck.
7. Do not attach hangers to permanent metal forms. Furnish cast-in-place hanger inserts that extend through forms.
8. Do not attach hangers to rolled-in hanger tabs of composite steel floor deck.
9. Do not connect or suspend steel framing from ducts, pipes, or conduit.

D. Seismic Bracing:
1. Provide at a maximum of twelve (12) feet on center in both directions and a maximum of six (6) feet from each wall.
2. Provide four (4) No. 12-gauge wires secured to the main runner within two (2) inches of the cross runner intersection and splayed 90 degrees from each other at an angle not to exceed 45 degrees from the plane of the ceiling.
3. Provide a rigid strut fastened to the main runner at the location of the bracing wires, extended to and fastened to the structural members above.

E. Grid Suspension Systems: Attach perimeter wall track or angle where grid suspension systems meet vertical surfaces. Mechanically join main beam and cross-furring members to each other and butt-cut to fit into wall track.

F. Installation Tolerances: Install suspension systems that are level to within 1/8 inch in 12 feet measured lengthwise on each member and transversely between parallel members.

END OF SECTION

SECTION 09 9100 – PAINTING

PART 1 - GENERAL

1.01 THE REQUIREMENT

A. Provide all labor, materials, equipment, and services required to do all painting (excluding items otherwise listed in the applicable Sections of Division 09 – Finishes), including preparation, priming, and protection of finished surfaces. An extensive and comprehensive painting job will be required and shall include all surfaces which normally are painted.

B. The intent of these Specifications is to obtain the material and workmanship necessary to produce an adequate and acceptable job, and is intended to describe the requirements for both shop and field painting.

C. The intent of this Specification Section is to include all items which are to receive painting and have not been included otherwise in these Specifications.

D. The intent of this Specification shall be to paint all exposed structural steel, miscellaneous ferrous metal, lintels, equipment, piping, all exterior masonry walls, and all other work obviously required or noted to be painted unless otherwise specified (see Section 2.01). The omission of minor items in the schedule of work shall not relieve the obligation to include such items where they come within the general intent of the Specifications as stated herein. All interior surfaces and equipment which have been previously painted shall be repainted or recoated following the proper surface preparation as shown on the Drawings.

E. Review and examine all Divisions and Sections of these Specifications for any additional painting requirements and/or additional surfaces or items to be painted.

F. Apply specified finish coats of paint to all pre-primed work and complete finishing system for unprimed work required to be painted.

G. Backprime, with specified interior first coat material all surfaces of finish trim which will be concealed after installation.

H. Apply specified finish coats of paint to all prepainted surfaces which require only a finish coat. Otherwise, the complete system (as given in Section 2.01) shall be administered.

1.02 RELATED WORK

A. Wherever detailed painting requirements are covered under an equipment or product Specification, the Specifications herein other Sections, govern with respect to surface preparation, paint materials, coats, thicknesses, and coverage.

1.03 ITEMS NOT REQUIRING FIELD PAINTING

A. All new galvanized and stainless steel surfaces (except where noted on Drawings).

B. Valves, fittings, and appurtenances in small diameter plastic piping (less than 3 inches).

C. Prefinished items.

D. Plain copper (except as required for color coding) and stainless steel.

E. Aluminum except where otherwise designated and required to prevent corrosion at contact with dissimilar materials.

F. Concrete floors except where noted.

G. Exterior concrete surfaces except where noted.

H. Finish hardware.

I. Concealed from view items (except where required for color coding) and surfaces, except as specified herein or where previously painted.

J. Packing glands and other adjustable parts and nameplates of mechanical equipment.

K. Mechanical equipment (i.e. pumps, blowers, actuators, etc.)

1.04 DEFINITIONS

A. The term “paint” as used herein includes enamels, epoxy, paints, sealers, fillers, emulsions, and other coatings.

B. MDMTPC = Minimum dry mil thickness per coat.

C. MDFT = Minimum dry film thickness.

D. SSPC = Steel Structures Painting Council.

1.05 QUALITY ASSURANCE

A. Qualification of Painters: All painting shall be done by qualified, skilled, experienced craftsmen. In the acceptance or rejection of completed painting, no allowance will be made for lack of skills on the part of the craftsmen.

B. Paint Labels: Labels on paint containers shall include the following:
   1. Manufacturer's name
   2. Generic type of paint
   3. Manufacturer's stock number
   4. Color
   5. Instructions for thinning where applicable

C. Field Quality Control: Paint film thickness shall be subject to measurement by electrometer, wet film gauge, low or high voltage meter, and/or ENGINEER approved measuring instruments. If dry film thickness is found to be less than specified, or coverage is not uniform, apply additional paint to correct the thickness or appearance at no additional cost to the OWNER.

D. Compatibility:
   1. Compatibility of all paints used is required. A compatible paint will be considered a paint which precludes adverse effects related to bonding, drying delamination, scaling, lifting, and bleeding.
   2. In cases where shop-applied primers and coatings on materials and equipment furnished by suppliers are products different from those described in the Specifications, compatibility shall be verified with the specified field-applied coating system.
   3. Where thinning is necessary, only the products of the manufacturer furnishing the paint, and products for thinning purposes only, will be allowed.

E. Thickness and Spreading Rates:
   1. Minimum dry mil thicknesses per coat (MDMTPC) and/or spreading rates in square feet per gallon shall be governed by the manufacturer's current data sheets or literature containing recommendations or instructions regarding these values. These recommended dry mil thickness and/or spreading rate values will be considered requirements to be met same as if set out herein these Specifications and Contract Documents. Do not exceed manufacturer's recommended coverage rates.
   2. The number of coats to be applied are specified herein and shall govern. Where the total dry film thickness is specified, this thickness shall govern over the MDMTPC.

1.06 PRODUCT DELIVERY, HANDLING AND STORAGE

A. Delivery: All materials shall be brought to the project site in the original sealed and labeled containers of the paint manufacturer. All labels shall be legible and intact at time of use.

B. Manufacturer's Instructions: Paint manufacturer's written instructions for proper surface preparation, mixing, thinning, application and drying shall be furnished with the paint, and strictly followed.

C. Storage of Materials:
   1. Store only acceptable materials on project site.
   2. Store only in a suitable and designated area restricted to the storage of paint materials and related equipment.
   3. Comply with all applicable health and fire regulations regarding the storage of paint materials.
   4. Storage of material shall comply with the manufacturer's specifications; however, storage shall be at a minimum temperature of 50°F.

D. Protection of Materials:
   1. Take all necessary precautions to ensure the safe storage and use of paint materials and the prompt and safe disposal of waste.
   2. Painting wastes shall be properly deposited in containers made for this purpose. Do not use plumbing fixtures for disposing of paints wastes.
   3. Take all necessary precautions to protect paint materials before, during and after application and to protect the finished work.

E. Replacement: In the event of damage to paint materials, immediately make all replacements necessary at no additional cost.

F. Product delivery, handling and storage shall be in accordance with Part 1 of this Specification.

1.07 JOB CONDITIONS

A. Environmental Requirements:
   1. Comply with manufacturer's recommendations as to the environmental conditions under which painting systems can be applied.
   2. Do not apply finish in areas where dust and/or mist is being generated.

B. Climatic Conditions: Paint shall not be applied if:
   1. The ambient temperature or temperature of the surface to be painted is below 50°F or below the temperature recommended by the paint manufacturer.
   2. The relative humidity is above 85 percent.
   3. The relative humidity is such that the paint will not dry properly in accordance with the manufacturer's instructions.

C. Projection:
   1. Protect with drop cloths, masking or other acceptable means all surfaces which could be damaged in function or appearance by paint, including surfaces not being painted concurrently and surfaces not to be painted.
   2. Hardware, accessories, fixtures, and similar items shall be removed and replaced after completion of painting.
   3. Spray painting will not be permitted when it will cause damage to adjacent of otherwise located surfaces.
   4. All paint splatters on glass shall be wiped off immediately.

PART 2 - PRODUCTS

2.01 PAINT SYSTEMS

A. General:
   1. All paints of a system shall be by one (1) manufacturer.
   2. "Lift" tests may be requested on various surfaces to be painted to assure bonding compatibility.
   3. Paints containing lead, or other "dangerous" materials, that surpass federal maximum levels shall not be allowed. Oil shall be pure boiled linseed oil.

2.02 COLORS

A. The manufacturer shall be able to furnish all paints for exposed surfaces in a wide range of colors including lighter and darker shades of these colors which may be selected on various surfaces, if not included in the following codes (also note, the below listed may be included in the requirements of the applicable Sections of Division 09 – Finishes):
   1. Safety Color Codes: Comply with Occupational Safety and Health Administration Standards, as applicable, regarding safety color codes.
   2. Piping Color Codes: Colors for process pipe coding shall be in accordance with these Specifications.

PART 3 - EXECUTION

3.01 INSPECTION

A. Examine surfaces scheduled to receive paint and/or coating finishes for conditions that will adversely affect application, permanence, or quality of work and which cannot be put into an acceptable condition through surface preparation.

B. Do not proceed with surface preparation or painting application until conditions are suitable.

C. If surfaces are not thoroughly dry or if they cannot be put in proper conditions to receive paint by customary cleaning methods, the painting applicators shall notify the ENGINEER in writing, requesting necessary corrections.

D. Review the specified or approved painting systems and bring any questions or doubts as to the proper performance to the ENGINEER. Otherwise, assume the responsibility for providing the desired results.

3.02 ACCEPTANCE OF SURFACES

A. The commencement of painting work in any area or space will be construed as acceptance of the surface as being satisfactory.

3.03 SURFACE PREPARATION

A. General:
   1. All surfaces shall be thoroughly cleaned and free of dust, rust, mill scale, loose paint, or oily materials.
   2. References to SSPC refer to Steel Structures Painting Council specifications.
   3. Surfaces shall be primed and/or treated, as specified, as soon after completion of surface preparation as practical, but in any event before any visible or detrimental corrosion or contamination can occur. A prepared surface, which becomes corroded or contaminated, shall be re-prepared before treating and/or priming.

B. Non-submerged Non-Galvanized Structural Steel: All new non-galvanized structural steel for non-submerged service shall have their surfaces prepared according to SSPC-SP6-63, Commercial Blast Cleaning.

C. Submerged Non-Galvanized Structural Steel: All new non-galvanized structural steel and fabricated metals for submerged service of high temperature service shall have their surfaces prepared according to SSPC-SP10-63T Near White Metal Blast Cleaning.

D. Unprimed Metal Surfaces: All unprimed metal surfaces and miscellaneous fabricated metals (exclusive of structural steel and galvanized metal) to be painted shall be thoroughly cleaned according to SSPC-SP2-63 Hand Tool Cleaning or SSPC-SP3-63 Power Tool Cleaning, unless specifically required elsewhere in these Specifications.

E. Non-Ferrous Metals: Non-ferrous metals surface preparation shall be not less than that required by the paint manufacturer.

F. Concrete and Masonry:
   1. All concrete and masonry surfaces shall be cleaned and free from loose particles.
   2. Concrete floors to be painted shall be etched with a 10 percent solution of muriatic acid. If the concrete surface is exceedingly dense, a greater strength acid or a second etching will be required. After etching for a minimum of 30 minutes, wash thoroughly with water to remove all traces of acid. Allow to thoroughly dry at least 72 hours.
   3. Submerged concrete to be coated shall have their surfaces prepared by a light sandblast (Brush Blast), to remove loose coating and provide a textured surface to enhance adherence of the new coating. No sandblasting shall be done on the job in areas containing pumps, motors or other equipment that could be damaged by infiltration of sand particles.

G. Wood Surfaces: Wood surfaces shall be thoroughly cleaned of all extraneous matter and all cracks, nail holes, and other defects properly filled and smoothed. Wood trim shall be sanded to fine finish and wiped clean of dust.

3.04 SHOP PRIMING

A. Shop priming shall be done with primers that are guaranteed by the equipment manufacturer to be compatible with the finish paints to be used.

B. The CONTRACTOR shall coordinate all paint materials supplied in the shop and field.

3.05 APPLICATION

A. On metal surfaces apply each coat of paint at the rate specified by the manufacturer to achieve the minimum dry mill thickness required. One gallon of paint as originally furnished by the manufacturer shall not cover a greater area when applied by spray gun than when applied un-thinned by brush. Deficiencies of film thickness shall be corrected.

B. On masonry, the application rates will vary according to surface texture; however, in no case shall the manufacturer's stated coverage rate be exceeded.

C. On porous surfaces, it shall be the painter's responsibility to achieve a protective and decorative finish either by decreasing the coverage rate of by applying additional coats of paint.

D. Evenly brush out each finish coat and permit to dry per manufacturer's recommendation before applying any subsequent coats.

E. All paints and catalogs shall be maintained at a minimum manufacturer's application temperature before applying.

F. Successive coats of paint shall be tinted so as to make each coat easily distinguishable from each other with the final undercoat tinted to a darker shade than the finish coat.

G. Finish surfaces shall not show brush marks or other irregularities. Undercoats shall be thoroughly and uniformly sanded with No. 00 sandpaper or equal to remove defects and provide a smooth even surface.

H. Painting shall be continuous and shall be accomplished in an orderly manner so as to facilitate inspection. Materials subject to weathering shall be prime coated as quickly as possible. Surfaces of exposed members that will be inaccessible after erection shall be cleaned and painted before erection.

I. All surfaces to be painted as well as the atmosphere in which painting is to be done shall be maintained at the conditions recommended by manufacturer by heating and ventilating, if necessary, until each coat of paint has hardened. Any defective paint shall be removed and the surface repainted.

J. Perform all required back priming work before items are installed.

3.06 REINSTALLATION OF REMOVED ITEMS

A. Following completion of painting in each space, promptly reinstall all items removed for painting, using only workmen skilled in the particular trade.

3.07 CLEANING

A. During the progress of Work, do not allow the accumulation of empty containers or other excess items except in areas specifically reserved for that purpose.

B. Take all precautions to prevent accidental spillage of paint materials. In the event of spilling, immediately remove all spilled materials and the waste and other equipment used to clean up the spill, and wash surfaces to their original undamaged condition.

C. Touch-up and restore finish where damaged.

D. Remove all trash and accumulated materials of a painting nature from premises at the completion of the Work.

E. Paint spots, oil or stains upon adjacent surfaces shall be removed. Any damage to Work of other trades or equipment caused from painting shall be made good at no additional expense.

F. Do not mark surface finish of items being cleaned.

G. Leave entire job clean (including paint storage space).

3.08 FINAL INSPECTION

A. Protect all painted surfaces against damage until the date of final acceptance of the Work.

B. Conduct a final inspection of all painting work and repaint or retouch any areas or surfaces found deficient in complying with these Specifications.

END OF SECTION

SECTION 09 9700 – SPECIAL COATINGS

PART 1 - GENERAL

1.01 THE REQUIREMENT

A. Provide all labor, materials, equipment, and services required for accomplishing special coatings on equipment, tanks, or piping in accordance with these Specifications and Contract Documents.

1.02 SPECIAL NOTICE

A. Because there exists in this project corrosive agents in the liquids and, in certain areas, in the atmosphere, special coatings for protecting the select equipment, structures, and appurtenances are required. The service requirements of the coatings are harsh and only products with an extended history of successful application will be acceptable.

B. Wherever detailed coating/painting requirements are covered under an equipment or product specification, the Specifications herein, shall govern over those coating requirements, with respect to surface preparation, coat materials, coats, thickness, and coverage with the exception of manufacturer's supplied coatings and protection. Determine if the manufacturer's supplied coatings are adequate.

1.03 ACCEPTABLE PRODUCTS

A. Specified products are specified as the standard of quality. Products are listed to establish a minimum standard of quality. Equivalent materials of other manufacturers may be submitted on written approval of the ENGINEER. As part of the proof of quality and performance equivalency, the ENGINEER will require at the cost of the CONTRACTOR, certified test reports from a nationally known, reputable, and independent testing laboratory conducting comparative tests as directed by the ENGINEER between the product specified and the requested substitution.

B. Requests for substitution shall include manufacturer's literature for each product giving name, product number, and generic type, descriptive information, solids by volume, recommended dry film thickness and certified lab test reports showing results to equal the performance criteria of the products specified herein. All materials must meet all local, state, and Federal regulations including and not limited to the Air Quality Management District. In addition, a list of five projects shall be submitted in which each product has been used and rendered satisfactory service.

1.04 ITEMS REQUIRING SPECIAL COATING

A. See Coating Schedules as listed in PART 2 – PRODUCTS.

1.05 ITEMS NOT REQUIRING SPECIAL COATING

A. The metal surfaces of stainless steel, chromium plate, galvanized and aluminum that are not now coated will not require field coating. Do not apply coating over any code-required labels, glass items, gauges, and name plates. It is also important not to coat any moving parts or operating units, valves or stems, or any mechanical and electrical parts such as valve and damper operators, linkages. It is the contactor's responsibility to protect any surface that is not to receive a coating.

1.06 QUALITY ASSURANCE

A. Qualification of Coaters: Qualification of Coaters: All coating shall be done by qualified, skilled, and experienced craftsmen. In the acceptance or rejection of completed coating, no allowance will be made for lack of skills on the part of the craftsmen.
   1. SSPC-QP-1 Certified - Field Application to Complex Industrial and Marine Structures

2. SSPC-QP-3 Certified - Shop Painting Certification

B. Coating Labels: Labels on coating containers shall include the following:
   1. Manufacturer's name
   2. Generic type of coat
   3. Manufacturer's stock number
   4. Color
   5. Instructions for thinning where applicable

C. Field Quality Control: Coating film thickness shall be subject to measurement with electrometer, wet film gauge, low or high voltage meter and/or applicable measuring instruments acceptable to the ENGINEER. If dry film thickness is found to be less than specified, or coverage is not uniform, an additional coating to correct thickness or appearance at no additional cost shall be applied.

D. Compatibility:
   1. Compatibility of all coatings used shall be required. A compatible coating will be considered a coat, which precludes adverse effects related to bonding, drying delamination, scaling, lifting, and bleeding.
   2. In cases where shop-applied primers and coatings on materials and equipment furnished by suppliers are products different from those described in the Specifications, compatibility with the specified field-applied coating system shall be verified by the CONTRACTOR.
   3. Where thinning is necessary, only the products of the manufacturer furnishing the coating, and products for thinning purposes only, will be allowed.

E. Thickness and Spreading Rates:
   1. Minimum dry mil thickness per coat (MDMTPC) and/or spreading rates in square feet per gallon shall be governed by the manufacturer's current data sheets or literature containing recommendations or instructions regarding these values. These recommended dry mil thickness and/or spreading rate values will be considered requirements to be met same as if set out herein; these Do Not exceed manufacturer's recommended coverage rates.
   2. The number of coats to be applied are specified herein and shall govern. Where the total dry film thickness is specified, this thickness shall govern over the MDMTPC.

1.07 PRODUCT DELIVERY, HANDLING AND STORAGE

A. Delivery: All materials shall be brought to the job site in the original sealed and labeled containers of the coating manufacturer. All labels shall be legible and intact at time of use.

B. Manufacturer's Instruction: Coating manufacturer's written instructions for proper surface preparation, mixing, thinning, application and drying shall be furnished with the coating and strictly followed.

C. Storage of Materials:
   1. Store only acceptable materials on project site.
   2. Store only in a suitable and designated area restricted to the storage of coating materials and related equipment.
   3. Comply with all applicable health and fire regulations regarding the storage of coating materials.
   4. Storage of material shall comply with the manufacturer's specifications; however, storage shall be at a minimum temperature of 50°F.

D. Protection of Materials:
   1. Take all necessary precautions to ensure the safe storage and use of coating materials and the prompt and safe disposal of waste.
   2. Coating wastes shall be properly deposited in containers made for this purpose.
   3. Take all necessary precautions to protect coating materials before, during and after application and to protect the finished work.

E. Replacement: In the event of damage to coating materials, immediately make all replacements necessary to the approval of the ENGINEER and at no additional cost.

F. Product delivery, handling and storage shall be in accordance with Part 1 of this Section and the manufacturer's recommendations.

1.08 JOB CONDITIONS

A. Environmental Requirements:
   1. Comply with manufacturer's recommendations as to environmental conditions under which coatings and coating systems can be applied.
   2. Do not apply finish in areas where dust and/or mist is being generated.

B. Climatic Conditions: Coating shall not be applied if:
   1. The ambient temperature or temperature of the surface to be coated is below 50°F or below the temperature recommended by the coating manufacturer.
   2. The relative humidity is above 85 percent.
   3. The relative humidity is such that the coating will not dry properly in accordance with the manufacturer's instructions.

C. Protection:
   1. Protect with drop cloths, masking or other acceptable means all surfaces which could be damaged in function or appearance by coating, including surfaces not being coated concurrently and surfaces not to be coated.
   2. Hardware, accessories, fixtures, and similar items shall be removed and replaced after completion of coating.
   3. Spray coating will not be permitted when it will cause damage to adjacent or otherwise located surfaces.
   4. All coating splatters on glass shall be wiped off immediately.

PART 2 - PRODUCTS

2.01 COATING SYSTEMS FOR STEEL - STRUCTURAL, TANKS, ROOF DECKING, PIPE, AND EQUIPMENT

A. Exterior Exposed:
   1. System Type: Aromatic Urethane Zinc-rich Primer/Epoxy/Polyurethane.
   2. Surface Preparation: SSPC-SP 6.
   3. Primer:
      a. Sherwin Williams Corothane Galvapac 2K @ 3.0 – 5.0 mils DFT 2K 100 for Low VOC
      b. Tnemec Series 90-97 Tneme Zinc @ 2.5-3.5 0 mils DFT. 94 H2O for Low VOC
   4. Intermediate Coat:
      a. Sherwin Williams Macropoxy 646; 4.0 – 8.0 mils DFT. 100 for Low VOC
      b. Tnemec Series N69 Hi-Build Epoxoline II; 4.0 to 6.0 mils DFT. L69 for Low VOC
   5. Finish Coat:
      a. Sherwin Williams Hi Solids Polyurethane @ 3.0 – 5.0 mils DFT. 250 or 100 for Low VOC

b. Series 1075 Endura-Shield II; 2.5 to 3.5 mils DFT. 1095 for Low VOC

6. Total DFT: 9.5 to 14.5 mils.

B. Interior Exposed:
1. System Type: Epoxy.
2. Surface Preparation: SSPC-SP 6.
3. Primer:
   a. Sherwin Williams Macropoxy 646; 4 – 8 mils DFT. M646 100 for Low VOC
   b. Tnemec Series N69 Hi-Build Epoxoline II; 3.0 to 5.0 mils DFT. L69 for Low VOC
4. Finish Coat:
   a. Sherwin Williams Macropoxy 646; 4 – 8 mils DFT. M646 100 for Low VOC
   b. Tnemec Series N69 Hi-Build Epoxoline II; 4.0 to 6.0 mils DFT. L69 for Low VOC
5. Total DFT: 7.0 to 11.0 mils.

C. Immersion, Potable Water:
1. System Type: Epoxy.
2. Surface Preparation: SSPC-SP 10.
3. Primer:
   a. Sherwin Williams Macropoxy 5500; 4.0 – 8.0 mils DFT.
   b. Tnemec Series N140 Pota Pox Plus; 4.0 to 6.0 mils DFT. L140 for Low VOC
4. Intermediate Coat:
   a. Sherwin Williams Macropoxy 5500; 4.0 – 8.0 mils DFT
   b. Tnemec Series N140 Pota Pox Plus; 4.0 to 6.0 mils DFT. L140 for Low VOC
5. Finish Coat:
   a. Sherwin Williams Macropoxy 5500; 4.0 – 8.0 mils DFT
   b. Tnemec Series N140 Pota Pox Plus; 4.0 to 6.0 mils DFT. L140 for Low VOC
6. Total DFT: 12.0 to 18.0 mils.

Or

1. System Type: Ultra High Solids Epoxy.
2. Surface Preparation: Abrasive blast clean per SSPC-SP10, 2.5 – 4 mil profile
3. Primer:
   a. For stripe coat application to all welds and irregular surfaces.
   b. Sherwin Williams Macropoxy 5500; 4.0 – 6.0 mils DFT
   c. Tnemec Series N140 Pota Pox Plus; 4.0 to 6.0 mils DFT. L140 for Low VOC
4. Finish Coat:
   a. For finish coat application over all surfaces.
   b. Sherwin Williams Sherplate PW or Duraplate UHS; 20.0 – 30.0 mils DFT
   c. Tnemec Series 20 or 22; 20.0 - 30.0 mils DFT.
5. Total DFT: 20.0 to 30.0 mils

D. Interior/Immersion, Severe Exposure to H2S:
1. System Type: Modified Epoxy.
2. Surface Preparation: White Metal Blast SSPC-SP 5 with minimum 3.0-mil profile.
3. Primer/Finish (One or More Coats):
   a. Sherwin Williams Duraplate 6100 or Novaplate 325; 30.0 – 40.0 mils DFT
   b. Tnemec Series 435 Perma-Glaze; 30.0 to 36.0 mils DFT.
4. Total DFT: 30.0 to 36.0 mils.

E. Marginally Prepared Surfaces (Maintenance, Non-Immersion, Interior):
1. System Type: Mastic epoxy, solvent or water based.
2. Surface Preparation: In accordance with manufacturer's instructions.

3. Primer:
    a. Sherwin Williams Macropoxy 646; 4 – 8 mils DFT. M646 100 for Low VOC
    b. Tnemec Series 27 WB Typoxy 4.0 to 6.0 mils DFT.
4. Finish Coat:
    a. Sherwin Williams Macropoxy 646; 4 – 8 mils DFT. M646 100 for Low VOC
    b. Tnemec Series 27 WB Typoxy 4.0 to 6.0 mils DFT.
5. Total DFT: 8.0 to 12.0 mils.

F. Marginally Prepared Surfaces (Maintenance, Non-Immersion, Exterior):
1. System Type: Mastic Epoxy/Polyurethane.
2. Surface Preparation: In accordance with manufacturer's instructions.
3. Primer:
    a. Sherwin Williams Macropoxy 646; 4 – 8 mils DFT. M646 100 for Low VOC
    b. Tnemec Series 27 WB Typoxy 4.0 to 6.0 mils DFT.
4. Finish Coat (Exterior):
    a. Sherwin Williams Hi Solids Polyurethane; 3.0 – 5.0 mils DFT; 250 or 100 for Low VOC
    b. Series 1075 Endura-Shield II; 2.5 to 3.5 mils. DFT 1095 for Low VOC
5. Total DFT: 6.5 to 9.5 mils.

G. Below Ground Pipe (Heat Resistant to 375 F and Corrosion Resistant):
1. System Type: Moisture Cure Urethane Zinc Rich Primer/Inorganic Hybrid water borne Epoxy
2. Surface Preparation: Near White Metal Blast SSPC-SP-10 with an angular anchor profile of 1-2 mils.
3. Primer:
    a. Sherwin Williams Corothane Galvapac 2K; 3.0 – 5.0 mils DFT. 100 for low VOC.
    b. Tnemec Series 90E-92 Tneme Zinc; 2.5 to 3.5 mils DFT.
4. Intermediate Coat:
    a. Sherwin Williams N/A
    b. Tnemec Series 1224 Epoxoline WB @ 4.0 – 8.0 mils DFT
5. Finish Coat:
    a. Sherwin Williams Sherglass FF; 8.0 - 16.0 mils DFT.
    b. Series 1224 Epoxoline WB; 4.0 – 8.0 mils DFT
6. Total DFT: 10.5 to 19.5 mils.

Or

1. System Type: Reinforced Novolac Epoxy
2. Surface Preparation: Near White Metal Blast SSPC-SP-10 with an angular anchor profile of 1-2 mils.
3. Primer:
    a. Sherwin Williams Epo Phen HT Coating; 7.0 - 9.0 mils DFT.
4. Finish Coat:
    b. Sherwin Williams Epo Phen HT Coating; 7.0 - 9.0 mils. DFT
5. Total DFT: 14.0 to 18.0 mils.

2.02 COATING SYSTEMS FOR FACTORY PRIMED STEEL - DOORS, FRAMES, AND MISCELLANEOUS EQUIPMENT

A. Interior Exposed:
1. System Type: Acrylic
2. Surface Preparation: Clean and dry
3. Primer: Factory primed
4. Field Primer:
   a. Sherwin Williams ProCryl Universal Primer; 2.0 - 4.0 mils DFT
   b. Tnemec Series 115 Uni Bond DF; 2.0 to 3.0 mils DFT.
5. Finish Coat:
   a. Sherwin Williams Shercryl HPA; 2.0 – 4.0 mils DFT. Pro Industrial Acrylic for low VOC.
   b. Tnemec Series 1029 Enduratone; 2.0 - 3.0 mils. DFT
6. Total DFT: 4.0 to 6.0 mils (on top of shop primer).

B. Exterior Exposed:
1. System Type: Inorganic Hybrid Water Based Epoxy/Polyurethane
2. Surface Preparation: Clean and dry.
3. Primer: Factory primed.
4. Field Primer:
   a. Sherwin Williams Pro Industrial WB Cat Epoxy B73; 3.0 – 5.0 mils DFT
   b. Tnemec Series 27 Typoxy WB; 3.0 - 5.0 mils DFT.
5. Finish Coat:
   a. Sherwin Williams Pro Industrial WB Acrolon 100 B65; 2.0 – 4.0 mils DFT.
   b. Tnemec Series 1075 Endura-Shield II; 2.5 - 3.5 mils. DFT 1095 for Low VOC
6. Total DFT: 5.5 to 8.5 mils (on top of shop primer).

2.03 COATING SYSTEMS FOR GALVANIZED STEEL AND NONFERROUS METAL - PIPE AND MISCELLANEOUS FABRICATIONS

A. Interior Exposure:
1. System Type: Acrylic
2. Surface Preparation: In accordance with manufacturer’s instructions and ASTM D6386
3. Primer:
   a. Sherwin Williams ProCryl Primer; 2.0 – 3.0 mils DFT
   b. Tnemec Series 115 Uni Bond DF; 2.0 - 3.0 mils DFT
4. Finish Coat:
   a. Sherwin Williams Shercryl HPA; 2.0 – 4.0 mils DFT. Pro Industrial Acrylic for low VOC.
   b. Tnemec Series 1029 Enduratone; 2 .0 - 3 .0 mils DFT.
5. Total DFT: 4 .0 to 6 .0 mils.

B. Exterior Exposure:
1. System Type: Acrylic
2. Surface Preparation: In accordance with manufacturer’s instructions and ASTM D6386
3. Primer:
   a. Sherwin Williams ProCryl Primer; 2.0 – 3.0 mils DFT
   b. Tnemec Series 115 Uni Bond DF; 2 .0 to 3 .0 mils DFT.

4. Finish Coat:
    a. Sherwin Williams Shercryl HPA; 2.0 – 4.0 mils DFT. Pro Industrial Acrylic for low VOC.
    b. Tnemec Series 1029 Enduratone; 2.0 to 3.0 mils. DFT
5. Total DFT: 4.0 to 6.0 mils

2.04 COATING SYSTEMS FOR DUCTILE OR CAST IRON - PIPE, PUMPS, AND VALVES

A. Interior Exposure:
1. System Type: Epoxy
2. Surface Preparation: In accordance with manufacturer's instructions
3. Primer:
    a. Sherwin Williams Macropoxy 646; 4 – 8 mils DFT. M646 100 for Low VOC
    b. Series N69 Hi-Build Epoxoline II; 4.0 to 6.0 mils DFT. L69 for Low VOC
4. Finish Coat:
    a. Sherwin Williams Macropoxy 646; 4 – 8 mils DFT. M646 100 for Low VOC
    b. Series N69 Hi-Build Epoxoline II; 4.0 - 6.0 mils DFT. L69 for Low VOC
5. Total DFT: 8.0 to 12.0 mils.

B. Exterior Exposure:
1. System Type: Epoxy/Polyurethane.
2. Surface Preparation: In accordance with manufacturer's instructions.
3. Primer:
    a. Sherwin Williams Macropoxy 646; 4 – 8 mils DFT. M646 100 for Low VOC
    b. Tnemec Series N69 Hi-Build Epoxoline II; 4.0 - 6.0 mils DFT. L69 for Low VOC
4. Finish Coat:
    a. Sherwin Williams Hi Solids Polyurethane; 3.0 – 5.0 mils DFT. 250 or 100 for low VOC.
    b. Series 1075 Endura-Shield II; 2.5 - 3.5 mils DFT. 1095 for Low VOC
5. Total DFT: 6.5 to 9.5 mils

C. Below Ground:
1. System Type: Coal tar epoxy.
2. Surface Preparation: In accordance with manufacturer's instructions.
3. Prime/Finish Coat:
    a. Sherwin Williams Targuard Coal Tar Epoxy; 16 – 32 mils DFT. 100 for low VOC.
    b. Series 46H-413 Hi-Build Tneme-Tar; 14.0 - 20.0 mils DFT. Series 27 WB Typoxy for Low VOC.
4. Total DFT: 14.0 to 20.0 mils

D. Immersion, Potable Water:
1. System Type: Epoxy.
2. Surface Preparation: In accordance with manufacturer's instructions.
3. Primer:
    a. Sherwin Williams Macropoxy 5500; 4.0 – 6.0 mils DFT
    b. Series N140 Pota Pox Plus; 4.0 to 6.0 mils DFT. L140 for Low VOC
4. Intermediate Coat:
    a. Sherwin Williams Macropoxy 5500; 4.0 – 6.0 mils DFT
    b. Series N140 Pota Pox Plus; 4.0 - 6.0 mils DFT. L140 for Low VOC.
5. Finish Coat:
    a. Sherwin Williams Macropoxy 5500; 4.0 – 6.0 mils DFT
    b. N69 Hi-Build Epoxoline II; 4.0 - 6.0 mils DFT. L140 for Low VOC

6. Total DFT: 12.0 to 18.0 mils

Or

1. System Type: Ultra High Solids Epoxy.
2. Surface Preparation: Abrasive blast clean per SSPC-SP10, 2.5 – 4 mil profile
3. Primer:
   a. For stripe coat application to all welds and irregular surfaces.
   b. Sherwin Williams Macropoxy 5500; 4.0 – 6.0 mils DFT
   c. Tnemec Series N140 Pota Pox Plus; 4.0 to 6.0 mils DFT. L140 for Low VOC
4. Finish Coat:
   a. For finish coat application over all surfaces.
   b. Sherwin Williams Sherplate PW or Duraplate UHS; 20.0 – 30.0 mils DFT
   c. Tnemec Series 20 or 22; 20.0 - 30.0 mils DFT.
5. Total DFT: 20.0 to 30.0 mils

E. Immersion, Severe Exposure to H2S:
1. System type: Modified Polyamine Ceramic Epoxy
2. Surface preparation: In accordance with manufacturer's recommendation.
3. Primer/Finish (One or more coats):
   a. Sherwin Williams Duraplate 6100 or Novaplate 325; 30 – 40 mils DFT
   b. Tnemec Series 431 Perma Glaze; 30-40 mils DFT
4. Total DFT: 30-40 mils.

2.05 COATING SYSTEMS FOR PVC

A. Interior Exposure:
1. System Type: Epoxy.
2. Surface Preparation: Scarify
3. Primer:
   a. Sherwin Williams Macropoxy 646; 4.0 – 8.0 mils DFT. M646 100 for Low VOC
   b. Series N69 Hi-Build Epoxoline II; 4.0 to 6.0 mils DFT. L69 for Low VOC
4. Finish Coat:
   a. Sherwin Williams Macropoxy 646; 4.0 – 8.0 mils DFT. M646 100 for Low VOC
   b. Tnemec Series N69 Hi-Build Epoxoline II; 4.0 to 6.0 mils DFT. L69 for Low VOC
5. Total DFT: 8.0 to 12.0 mils.

B. Exterior Exposure:
1. System Type: Epoxy/Polyurethane.
2. Surface Preparation: Scarify.
3. Primer:
   a. Sherwin Williams Macropoxy 646; 4.0 – 8.0 mils DFT. M646 100 for Low VOC
   b. Series N69 Hi-Build Epoxoline II; 4.0 - 6.0 mils DFT. L69 for Low VOC
4. Finish Coat:
   a. Sherwin Williams Hi Solids Polyurethane; 3.0 – 5.0 mils DFT. 250 or 100 for low VOC.
   b. Series 1075 Endura-Shield II; 2.5 to 3.5 mils. DFT. 1095 for Low VOC
5. Coating provided shall contain UV inhibitor.

2.06 COATING SYSTEMS FOR PRECAST CONCRETE AND CAST-IN-PLACE CONCRETE (REQUIRE WHERE INDICATED IN PLANS)

A. Exterior Exposed:
   1. System Type: Acrylic
   2. Surface Preparation: SSPC-SP 13/NACE 6. Clean and dry
   3. Primer:
      a. Sherwin Williams Loxon XP; 4.0 – 8.0 mils DFT
      b. Tnemec Series 180 W.B. Tneme-Crete; 4.0 to 8.0 mils DFT.
   4. Finish Coat:
      a. Sherwin Williams Loxon XP; 4.0 – 8.0 mils DFT
      b. Tnemec Series 180 W.B. Tneme-Crete; 4.0 to 8.0 mils DFT.
   5. Total DFT: 8.0 to 16.0 mils.

B. Below Grade:
   1. System Type: Coal tar
   2. Surface Preparation: SSPC-SP 13/NACE 6. Clean and dry
   3. Primer:
      a. Sherwin Williams Targuard Coal Tar Epoxy; 8.0 – 16.0 mils DFT. 100 for low VOC
      b. Series 46-465 H.B. Tnemecol. DFT 8.0 to 12.0 mils.
   4. Finish Coat:
      a. Sherwin Williams Targuard Coal Tar Epoxy; 8.0 – 16.0 mils DFT. 100 for low VOC
      b. Tnemec Series 46-465 H.B. Tnemecol. DFT 8.0 to 12.0 mils.
   5. Total DFT: 16.0 to 24.0 mils.

C. Interior Exposed:
   1. System Type: Epoxy
   2. Surface Preparation: SSPC-SP 13/NACE 6. Abrasive Blast Cleaning
   3. Patching:
      a. Sherwin Williams Duraplate 2300 (as needed)
      b. Series 218 MortarClad (as needed)
   4. Primer:
      a. Sherwin Williams Macropoxy 646; 4.0 – 8.0 mils DFT. M646 100 for Low VOC
      b. Tnemec Series N69 Hi-Build Epoxoline II; 4.0 to 6.0 mils DFT. L69 for Low VOC
   5. Finish Coat:
      a. Sherwin Williams Macropoxy 646; 4.0 – 8.0 mils DFT. M646 100 for Low VOC
      b. Tnemec Series N69 Hi-Build Epoxoline II; 4.0 to 6.0 mils DFT. L69 for Low VOC
   6. Total DFT: 8.0 to 12.0 mils.

D. Severe Service – Immersion, H2S Exposure or Chemical Corrosion Protection (Light to Heavy Abrasion):
   1. System I (H2S less than 50 ppm, Light Abrasion)
      a. System Type: Modified Epoxy.
      b. Surface Preparation: SSPC-SP 13/NACE 6. Abrasive blast clean to ICRI 310.2, CSP 4 – 6. Surfacing and Patching:
         1) Sherwin Williams Duraplate 2300; 1/16 inch DFT
         2) Tnemec Series 218 MortarClad; 1/16 inch DFT (nominal 62.5 mils)

c. Primer/Finish (One or More Coats):
   1) Sherwin Williams Duraplate 6100; 1/16 inch DFT
   2) Tnemec Series 435 Perma-Glaze; 20.0 to 30.0 mils DFT

2. System II (H2S less than 100 ppm, Moderate to Heavy Abrasion)
   a. System Type: Modified Epoxy Mortar
   b. Surface Preparation: SSPC-SP 13/NACE 6. Abrasive blast clean to ICRI 310.2, CSP 4 – 6. Patching:
      1) Sherwin Williams Duraplate 2300; As needed
      2) Tnemec Series 218 MortarClad; As Needed
   c. Series 434 Perma-Shield H2S; 1/8 inch DFT (nominal 125 mils)
3. System III (H2S more than 100 ppm, Moderate to Heavy Abrasion)
   a. System Type: Modified Epoxy Mortar.
   b. Surface Preparation: SSPC-SP 13/NACE 6. Abrasive blast clean to ICRI 310.2, CSP 4 – 6. Patching:
      1) Sherwin Williams Duraplate 2300
      2) Tnemec Series 218 MortarClad; As Needed
   c. Mortar:
      1) Sherwin Williams Duraplate 6100; 1/8 inch DFT (nominal 125 mils)
      2) Series 434 Perma-Shield H2S; 1/8 inch DFT (nominal 125 mils)
   d. Finish (One or More Coats):
      1) Sherwin Williams Duraplate 6100; 20.0 – 30.0 mils DFT
      2) Series 435 Perma-Glaze; 20.0 - 30.0 mils DFT
4. System IV (H2S more than 100 ppm, Moderate to Heavy Abrasion)
   a. System Type: Semi Structural Epoxy
   b. Surface Preparation: SSPC-SP 13/NACE 6. Abrasive blast clean to ICRI 310.2, CSP 4 – 6
   c. Surfacing:
      1) Sherwin Williams Duraplate 2300, ¼ inch DFT nominal 250 mils
   d. Finish (One or More Coats):
      1) Sherwin Williams Duraplate 6100; 125.0 – 150.0 mils DFT
5. Chemical Corrosion Protective Coating
   a. Surface Preparation: SSPC-SP 13/NACE 6. Abrasive blast clean to ICRI 310.2, CSP 4 – 6.
   b. Primer:
      1) Sherwin Williams Duraplate 235 PW, Phenalkamine Epoxy; 1-coat @ 4-8 mils DFT
   c. Finish (One or More Coats):
      1) Sherflex Elastomeric Urethane; Aromatic Hybrid Polyurethane; 1-coat @ 60-80 mils DFT

2.07 COATING SYSTEMS FOR CONCRETE BLOCK MASONRY

A. Exposed, indoors and outdoors, as shown.
   1. System: Acrylic, Concrete: High molecular weight acrylic coating material shall have a minimum solids content of 35 percent by volume. Prime coat shall be an acrylic filler and sealer for concrete surfaces.
      a. Prime coat (Filler/sealer), Tnemec 180 Tneme-Crete, Sanitile 100, or ENGINEER-approved equal.
      b. Finish coats (2 or more, DFT = 3 mils), Tnemec 180 Tneme- Crete, Carbocrylic 3359 MC (DFT = 6 mils) or ENGINEER-approved equal.

B. Submerged in wastewater, including all vertical masonry surfaces above waterline as shown.
   1. System: Epoxy Mortar: High-build, 3-componet amine cured epoxy mortar, shall have a solids content of 100 percent by volume, suitable for long-term immersion and atmospheric exposure to wastewater. Filler-resurfacer compound shall be a 3-component epoxy cementitious thin overlay material used to fill voids and rough areas and must feather-edge capable. Epoxy Glaze (finish) coat shall be a 100-percent-solids epoxy suitable for long-term immersion and atmospheric exposure to wastewater.
      a. Filler/Resurfacre thin Overlay (Thickness = minimum 1/16”), Tnemec 218 MortarClad, or ENGINEER-approved equal.
      b. Epoxy Mortar (DFT = 125 mils) Tnemec 434 Perma-Shield, or ENGINEER-approved equal.
      c. Finish coat (DFT = 15-20 mils), Tnemec 435 Perma-Glaze, or ENGINEER-approved equal.

C. Exterior surfaces, above grade.
   1. System: Waterproofing: Two coats of a clear, non-staining, silane-modified-siloxane masonry waterproofing material. The waterproofing system after application shall be provided with not less than a five-year warranty on the performance of the product.
      a. Where EPA Allows Solvents: Chemstop, "WB Heavy Duty”; Rainguard, "XS", Chemprobe / Prime a Pell H2O; or ENGINEER-approved equal.
      b. Where EPA Prohibits Solvents: Chemstop, "WB Regular / Heavy Duty"; Rainguard's "Blok-Lok"; Rainproof's "Chem-Trete #45", Chemprobe / Prime A Pell H2O; or ENGINEER-approved equal.
   2. Surfaces shall be cleaned with a chemical (approved by waterproofing manufacturer) cleaner and power wash. Surfaces shall be clean and dry before application of waterproofing. Method and rate of application shall be in accordance with manufacturer's published instructions. A manufacturer's representative shall be present during applications if necessary for warranty.

PART 3 - EXECUTION

3.01 INSPECTION

A. Examine surfaces scheduled to receive coating for conditions that will adversely affect application, permanence, or quality of work and which cannot be put into an acceptable condition through surface preparation.

B. Do not proceed with surface preparation or coating application until conditions are suitable.

3.02 ACCEPTANCE OF SURFACES

A. The commencement of coating work in any area or space will be construed as acceptance of the surface as being satisfactory.

3.03 PREPARATION AND APPLICATION

A. Preparation and application shall be in accordance with coating systems (PART 2).

3.04 FINAL INSPECTION

A. Protect all coated surfaces against damage until the date of final acceptance.

B. Conduct a final inspection of all coating work and recoat or retouch any areas or surfaces found deficient in complying with these Specifications.

3.05 PIPING IDENTIFICATION

A. All visible piping ¾-inch and greater which is accessible for maintenance and operations shall be color-coded and identified with appropriate identification markers. Direction of flow arrows are to be included with each identification mark unless otherwise specified.

B. Each marker shall be black lettering on a yellow or white background and have a clearly printed legend to identify the contents of the pipe.

C. Locations for pipe markers to be as follows:

1. Adjacent to each valve (except as plumbing fixtures and equipment).
2. At each branch and riser take-off.
3. At each pipe passage through wall, floor, and ceiling construction.
4. At each pipe passage to underground
5. On all horizontal pipe runs, marked every 30 feet.

3.06 PIPE COLOR CODE

A. All piping color coding shall follow the ANSI/ASME A13.1 Labeling guidelines.

END OF SECTION

SECTION 10 1400 – SIGNAGE

PART 1 – GENERAL

1.01 SECTION INCLUDES

A. Cash allowance for signs

B. Room and door signs

C. Interior directional and informational signs

D. Luminous egress path marking and other "glow-in-the-dark" signs

E. Emergency evacuation maps

F. Building identification signs

G. Plaque

H. Traffic signs

1.02 PRICE AND PAYMENT PROCEDURES

A. Room and door signs are not covered by the allowance.

B. Allowance amount covers purchase and delivery but not installation.

1.03 REFERENCE STANDARDS

A. 36 CFR 1191 - Americans with Disabilities Act Accessibility Guidelines for Buildings and Facilities; Final Rule; (ADA Standards for Accessible Design)

B. ANSI/ICC A117.1 - American National Standard for Accessible and Usable Buildings and Facilities; International Code Council

C. UL 1994 - Luminous Egress Path Marking Systems

1.04 SUBMITTALS

A. See Section 01 3300 – Submittal Procedures.

B. Product Data: Manufacturer's printed product literature for each type of sign, indicating sign styles, font, foreground and background colors, locations, overall dimensions of each sign.

C. Signage Schedule: Provide information sufficient to completely define each sign for fabrication, including room number, room name, other text to be applied, sign and letter sizes, fonts, and colors.
   1. When room numbers to appear on signs differ from those on the drawings, include the drawing room number on schedule.
   2. When content of signs is indicated to be determined later, request such information from Owner through Engineer at least 2 months prior to start of fabrication; upon request, submit preliminary schedule.
   3. Submit for approval by Owner through Engineer prior to fabrication.

D. Samples: Submit two samples of each type of sign, of size similar to that required for project, illustrating sign style, font, and method of attachment.

E. Selection Samples: Where colors are not specified, submit two sets of color selection charts or chips.

F. Verification Samples: Submit samples showing colors specified.

G. Manufacturer's Installation Instructions: Include installation templates and attachment devices.

H. Maintenance Materials: Furnish the following for Owner's use in maintenance of project.
   1. Curved Sign Media Suction Cups: One for each 100 signs; for removing media.

1.05 QUALITY ASSURANCE

A. Manufacturer Qualifications: Company specializing in manufacturing the products specified in this section with minimum three years of documented experience.

1.06 DELIVERY, STORAGE, AND HANDLING

A. Package signs as required to prevent damage before installation.

B. Package room and door signs in sequential order of installation, labeled by floor or building.

C. Store tape adhesive at normal room temperature.

1.07 FIELD CONDITIONS

A. Do not install tape adhesive when ambient temperature is lower than recommended by manufacturer.

B. Maintain this minimum temperature during and after installation of signs.

PART 2 – PRODUCTS

2.01 MANUFACTURERS

A. Flat Signs:
   1. Best Sign Systems, Inc
   2. Cosco Industries (ADA signs); ADA Series 1
   3. Cosco Industries (non-ADA signs); Changeable Message Signs
   4. Inpro; Aspen produced in one-piece photopolymer media
   5. Mohawk Sign Systems, Inc
   6. Seton Identification Products
   7. Or ENGINEER-approved equal

B. Curved Signs:
   1. Vista System
   2. Or ENGINEER-approved equal

C. Dimensional Letter Signs:
   1. Cosco Industries; Cast Aluminum
   2. Inpro; S600-060
   3. Or ENGINEER-approved equal

D. Plaques:
   1. Cosco Industries; Cast Aluminum
   2. Or ENGINEER-approved equal

E. Photoluminescent Marking and Signage:
   1. Ecoglo, Inc; Guidance Strips
   2. Or ENGINEER-approved equal

2.02 SIGNAGE APPLICATIONS

A. Accessibility Compliance: All signs are required to comply with ADA Standards for Accessible Design and ANSI/ICC A 117.1 and applicable building codes, unless otherwise indicated; in the event of conflicting requirements, comply with the most comprehensive and specific requirements.

B. Room and Door Signs: Provide a sign for every doorway, whether it has a door or not, not including corridors, lobbies, and similar open areas.

1. Sign Type: Flat signs with engraved panel media as specified.
2. Provide "tactile" signage, with letters raised minimum 1/32-inch and Grade II braille.
3. Character Height: 1 inch.
4. Sign Height: 2 inches, unless otherwise indicated.
5. Office Doors: Identify with room numbers to be determined later, not the numbers shown on the drawings; in addition, provide "window" section for replaceable occupant name.
6. Conference and Meeting Rooms: Identify with room numbers to be determined later, not the numbers shown on the drawings; in addition, provide "window" section with sliding "In Use/Vacant" indicator.
7. Service Rooms: Identify with room names and numbers to be determined later, not those shown on the drawings.
8. Rest Rooms: Identify with pictograms, the names "MEN", "WOMEN", or “UNISEX” room numbers to be determined later, and braille.

C. Interior Directional and Informational Signs:
1. Sign Type: Same as room and door signs.
2. Sizes: As indicated on the drawings.
3. Allow for 20 signs 4 inches high by 16 inches long.
4. Wording of signs is scheduled on the drawings.
5. Where suspended, ceiling mounted, or projecting from wall signs are indicated, provide two-sided signs with same information on both sides.

D. Luminous Egress Path Marking and Other "Glow-in-the-Dark" Signs: Photoluminescent media.
1. Provide luminous egress path marking as required by local authority having jurisdiction.
2. Allow for total of 100 directional signs, approximately 6 inches square.
3. Allow for 1,000 linear feet of guidance strips.
4. Provide one numbered seat marker for each seat in auditorium and one numbered row marker for each row, each side of aisles.

E. Emergency Evacuation Maps:
1. Allow for one map per elevator lobby.
2. Map content to be provided by Owner.
3. Use clear plastic panel silk-screened on reverse, in brushed aluminum frame, screw-mounted.

F. Recognition/Donor Panels: Engraved panel media; individual name signs attached with magnetic tape to fixed panel.
1. Dimensions and Number of Name Signs: As indicated on the drawings.
2. Provide all name signs whether engraved or not, for uniform overall appearance.
3. Color: Color as selected.
4. Products:
   a. Inpro; S460 Donor Board
   b. Or ENGINEER-approved equal

G. Building Identification Signs:
1. Use individual metal letters.
2. Mount on outside wall in location shown on drawings.

H. Other Dimensional Letter Signs: Wall-mounted.
1. Exterior: Allow for total of 50 letters, 6 inches high, metal.
2. Interior: Allow for total of 50 letters, 6 inches high, metal.

I. Plaque: See Allowance for details.

J. Traffic Signs: To match campus standards; locate where indicated on the drawings.

2.03 SIGN TYPES

A. Flat Signs: Signage media without frame.
   1. Edges: Square.
   2. Corners: Square.
   3. Frame Finish: Natural (clear) anodized.
   4. Clear Cover: For customer produced sign media, provide clear cover of polycarbonate plastic, glossy on back, non-glare on front.
   5. Wall Mounting of One-Sided Signs: Tape adhesive.
   6. Wall and Ceiling Mounting of Two-Sided Signs: Aluminum wall bracket, powder coated, color selected from manufacturer's standard colors, attached with screws in predrilled mounting holes, set in clear silicone sealant.
   7. Suspended Mounting: Stainless steel suspension cables, cable clamps, and ceiling fastener suitable for attachment to ceiling construction indicated.

B. Radius / Curved Signs: One-piece, curved extruded aluminum media holder securing flat, flexible sign media by curved lip on two sides; other two sides closed by end caps; concealed mounting attachment.
   1. Sizes: As indicated on the drawings.
   2. Finish: Natural (clear) anodized.
   3. Sign Orientation: Curved in horizontal section.
   4. End Caps: Aluminum with finish matching frame and stainless steel screw attachment.
   5. End Caps: Plastic, color selected from manufacturer's standard colors, paintable.
   6. Clear Cover: For customer produced sign media, provide clear cover of polycarbonate plastic, glossy on back, non-glare on front.
   7. Wall Mounting of One-Sided Signs: Mechanical anchorage, with predrilled holes, and set in clear silicone sealant.
   8. Wall and Ceiling Mounting of Two-Sided Signs: Aluminum wall bracket, powder coated, color selected from manufacturer's standard colors, attached with screws in predrilled mounting holes, set in clear silicone sealant.
   9. Mounting of Floor Mounted Pylon Signs: Oval shaped steel base anchored to floor.
   10. Suspended Mounting: Stainless steel suspension cables, cable clamps, and ceiling fastener suitable for attachment to ceiling construction indicated.
   11. Directories: For customer-produced media; provide divider strips.

C. Color and Font: Unless otherwise indicated:
   1. Character Font: Helvetica, Arial, or another sans serif font
   2. Character Case: Upper case only
   3. Background Color: Clear
   4. Character Color: Contrasting color

2.04 ACCESSORIES

A. Concealed Screws: Stainless steel, galvanized steel, chrome plated, or other non-corroding metal.

B. Exposed Screws: Chrome plated.

C. Tape Adhesive: Double sided tape, permanent adhesive.

PART 3 EXECUTION

3.01 EXAMINATION

A. Verify that substrate surfaces are ready to receive work.

3.02 INSTALLATION

A. Install in accordance with manufacturer's instructions.

B. Install neatly, with horizontal edges level.

C. Locate signs where indicated:
   1. Room and Door Signs: Locate on wall at latch side of door with centerline of sign at 60 inches above finished floor.
   2. If no location is indicated obtain Owner's instructions.

D. Protect from damage until Substantial Completion; repair or replace damage items.

END OF SECTION

SECTION 10 2813 – TOILET ACCESSORIES

PART 1 – GENERAL

1.01 THE REQUIREMENT

A. All labor, materials, equipment, and services necessary to furnish and install toilet accessories as indicated or specified.

1.02 SUBSTITUTIONS

A. Substitutions shall be allowed upon Engineer's approval.

1.03 SUBMITTALS

A. Submit shop drawings in accordance with Section 01 33 00 – Submittal Procedures for all work under this Section.

1.04 QUALITY ASSURANCE

A. This Specification is based on products as manufactured by Bobrick Dispensers, Inc., Los Angeles, CA., unless otherwise noted. Products equaling or exceeding specification requirements as manufactured by D.J. Alexander Corporation, Charles Parker Company or American Dispenser Company are acceptable for bidding.

1.05 GENERAL REQUIREMENTS

A. Review drawings for locations of toilet accessories and verify dimensional requirements for recessed units. Coordinate location of blocking and built-in anchorage devices.

B. Notify Architect of any conflicts with accessory locations and partition dimensions or piping interference.

C. Use concealed fastening wherever possible.

D. Provide anchors, bolts and other necessary fasteners, and attach accessories securely to walls and partitions in locations as shown or directed.

E. Provide products of the same manufacturer for each type of accessory unit and for units exposed in the same areas, wherever possible.

F. Stamped names or labels on exposed faces of units will not be permitted, except where otherwise specified.

PART 2 – PRODUCTS

2.01 ACCESSORIES

A. Toilet Tissue Dispenser: B-265

B. Combination Paper Towel Dispenser and Disposal: B-39 003

C. Sanitary Napkin Vendor: B-3600 x 225

D. Sanitary Napkin Disposal: B-270

E. Toilet Seat Cover Dispenser: B-274

F. Soap Dispenser: B-822, counter mounted.

G. Grab Bars: B-6806 x 36, B69606 x 42

PART 3 – EXECUTION

3.01 INSTALLATION

A. Install all toilet accessories at locations indicated in strict accordance with manufacturer's printed instructions.

B. Install concealed mounting devices and fasteners fabricated of the same material as the accessories or of galvanized steel.

C. Provide theft-resistant fasteners for all accessory mountings.

D. Secure toilet room accessories to adjacent walls and partitions in accordance with the manufacturer's instructions for each item and each type of substrate construction.

E. Install grab bars in accordance with manufacturer's printed instructions at locations indicated. Install connectors or support angles between studs. Attachment of support angles to studs must be sufficient to withstand a horizontal pull of 300 pounds. Accurately position connector assemblies and tighten to the support angles before wall finish is applied. After wall surface is finished, secure concealed mounting plate to connector assembly using stainless steel machine screws furnished by the manufacturer. Where grab bars installed on toilet compartments make through-bolted connection with specified anchors.

END OF SECTION

SECTION 10 44 16 – FIRE EXTINGUISHERS

PART 1 – GENERAL

1.01 THE REQUIREMENT

A. Provide safety equipment as outlined and specified below.

1.02 SUBMITTALS

A. General: Submittals shall be furnished in accordance with Section 0133 00 - Submittals.

PART 2 – PRODUCTS

2.01 FIRE EXTINGUISHERS

A. Fire Extinguisher Requirements: Supply and install fire extinguishers as required by NFPA 820, and local building codes or requirements. The fire extinguishers shall be UL and FM certified for their intended use.

B. Fire Extinguisher Locations: Fire extinguisher locations shall be determined by the Fire Protection System Contractor to be as required by NFPA 820, OSHA and the local building code.

PART 3 – EXECUTION

3.01 SERVICES OF MANUFACTURER

A. Inspection, Startup and Field Adjustment: The proper location and installation of safety equipment shall be verified and approved by the building inspector. Proper fire extinguisher installation and location shall be approved by the local fire authority having jurisdiction.

END OF SECTION

SECTION 11 5300 – LABORATORY EQUIPMENT

PART 1 – GENERAL

1.01 THE REQUIREMENT

A. Provide the following laboratory equipment as specified below.

PART 2 – PRODUCTS

2.01 LIST OF LABORATORY EQUIPMENT TO BE FURNISHED:

A. Compound Microscope (100X magnification w/computer interface)

B. Portable Meter, Chlorine and pH (Hach 5870012)

C. Filter Paper Grade 42 - 15 cm diameter - 100pk 2x (Whatman 1442-150)

D. Graduated Cylinder 50 mL (Kimble 20024-50)

E. Kimble Graduated Beaker 100 mL (Kimble 14000-100)

F. Kimble Graduated Beaker 50 mL (Kimble 14000-50)

PART 3 – EXECUTION (NOT USED)

END OF SECTION

SECTION 12 3553.13 – METAL LABORATORY CASEWORK

PART 1 – GENERAL

1.01 SUMMARY

A. Section Includes:
   1. Steel casework
   2. Table frames
   3. Work surfaces
   4. Sinks and outlet
   5. Service fittings
   6. Accessory equipment

1.02 ALTERNATE PROPOSALS

A. Proposals are invited from alternate manufacturers only if they comply with the minimum design requirements and the minimum performance requirements. A notarized letter stating full compliance must be included in alternate proposals signed by an officer of the manufacturer to ensure compliance.

1.03 CASEWORK DESIGN REQUIREMENTS

A. Flush construction: Surfaces of doors, drawers and panel faces shall align with cabinet fronts without overlap of case ends, top or bottom rails. Horizontal and vertical case shell members (panels, top rails, and bottoms) shall meet in the same plane without overlap, cracks or crevices.

B. Slimline styling: Front width of end panels 3/4” and front height of top and bottom members 1".

C. Self-supporting units: Completely welded shell assembly without applied panels at ends, backs, or bottoms, so that cases can be used interchangeably or as a single, stand-alone unit.

D. Interior of case units: Easily cleanable, flush interior. Base cabinets, 30" and wider, with double swinging doors shall provide full access to complete interior without center vertical post.

E. Drawers: Sized on a modular basis for interchange to meet varying storage needs, and designed to be easily removable in field without the use of special tools.

F. Case openings: Rabbeted joints all four sides of case opening for hinged doors and two sides for sliding doors in order to provide dust resistant case.

G. Framed glazed doors: Identical in construction, hardware, and installation to solid panel doors. Design frame glazed doors to be removable for glass replacement.

1.04 CASEWORK PERFORMANCE REQUIREMENTS

A. Structural performance requirements: Casework components shall withstand the following minimum loads without damage or permanent deformation to the component or to the casework operation:
   1. Steel base unit load capacity: 500 lbs. per lineal foot
   2. Suspended units: 300 lbs.
   3. Drawers in a cabinet: 150 lbs.
   4. Utility tables (4 legged): 300 lbs.
   5. Hanging wall cases: 300 lbs.
   6. Load capacity for shelves of base units, wall cases and tall cases: 40 lbs. per square foot, up to 200 lbs.

B. Metal Finish Performance Requirements:
   1. Abrasion resistance: Maximum weight loss of 5.5 mg per 100 cycle when tested on a Taber Abrasion Tester #E40101 with 1000 gm wheel pressure and Calibrase #CS10 wheel.
   2. Hardness: Surface hardness equivalent to 4H pencil.
   3. Humidity resistance: Withstand 1000 hour exposure in saturated humidity at 100°F.
   4. Moisture resistance:
      a. No visible effect to surface finish after boiling water trickled over test panel inclined at 45°F for five minutes.
      b. No visible effect to surface finish following 100 hours of continuous application of a water-soaked cellulose sponge, maintained in a wet condition throughout the test period.
   5. Adhesion: Score finish surface of test panel with razor blade into 100 squares, 1/16" x 1/16", cutting completely through the finish but with minimum penetration of the substrate, and brush away particles with soft brush. Minimum 95 squares shall maintain their finish.
   6. Salt spray: Withstand minimum 200-hour salt spray test.

C. Chemical Resistance Finish Performance Requirements:
   1. See Section 1.05 of this specification section.

1.05 WORK SURFACE PERFORMANCE REQUIREMENTS

A. Test Procedure: Apply five drops of each reagent to surface and cover with 25mm watch glass, convex side down; test volatiles using one-ounce bottle stuffed with saturated cotton. After 24-hour exposure, flush surface, clean, rinse, and wipe dry.

B. Evaluation ratings: Change in surface finish and function shall be described by the following ratings:
   1. No Effect: No detectable change in surface material.
   2. Excellent: Slight detectable change in color or gloss, but no change to the function or life.
   3. Good: Clearly discernable change in color or gloss, but no significant impairment of work surface function or life.
   4. Fair: Objectionable change in appearance due to surface discoloration or etch, possibly resulting in deterioration of function over an extended period.
   5. Poor: Pitting, cratering, or permanently etching of work surface material; obvious and significant deterioration.

6. Test Results – Epoxy Resin Work Surface (Black):

CHEMICAL – ACIDS		RATING
Hydrochloric Acid	20%	No Effect
Hydrochloric Acid	37%	No Effect
Nitric Acid	20%	Excellent
Nitric Acid	70%	Good
Sulfuric Acid	30%	No Effect
Sulfuric Acid	77%	No Effect
Sulfuric Acid	96%	Poor
Phosphoric Acid	85%	No Effect
Perchloric Acid	60%	No Effect
Aqua Regia	--	No Effect
Chromic Acid	60%	Good
Acetic Acid	98%	No Effect
Formic Acid	90%	No Effect
Boric Acid	Sat.	No Effect
Citric Acid	Sat.	No Effect
Oxalic Acid	Sat.	No Effect
Hydrobromic Acid	48%	No Effect
Hydroflouric Acid	48%	Good
Vinegar	--	No Effect

CHEMICAL - BASES		
Ammonium Hydroxide	28%	No Effect
Sodium Hydroxide	10%	No Effect
Sodium Hydroxide	40%	No Effect
Sodium Hydroxide	Flake	No Effect
Potassium Hydroxide	Flake	No Effect

CHEMICAL – SALTS		
Zinc Chloride	Sat.	No Effect
Calcium Hypochlorite	Sat.	No Effect
Clorox Bleach	--	No Effect
Silver Nitrate	10%	No Effect
Sodium Sulfide	Sat.	No Effect
Sodium Chloride	Sat.	No Effect
Iodine, Tincture	--	No Effect
Hydrogen Peroxide	--	No Effect
Phenol	80%	No Effect
Cresol	--	No Effect
Formaldehyde	40%	No Effect
Mineral Oil	100%	No Effect
Glycerin	100%	No Effect

CHEMICAL – SOLVENTS		
Methyl Alcohol	100%	No Effect
Ethyl Alcohol	100%	No Effect
Buty Alcohol	100%	No Effect
Naptha	100%	No Effect
Turpentine	100%	No Effect
Kerosine	100%	No Effect
Haetane	100%	No Effect
Gasoline	100%	No Effect
Benzene	100%	No Effect
Toluene	100%	No Effect
Xylene	100%	No Effect
Acetone	100%	No Effect
Methyl Ethyl Ketone	100%	No Effect
Methyl Isobutyl Ketone	100%	No Effect
Ethyl Acetate	100%	No Effect
Ethyl Ether	100%	No Effect
Chloroform	100%	No Effect
Methyl Chloride	100%	No Effect
Trichlorethylene	100%	No Effect
Carbon Tetrachloride	100%	Excellent
Monochloro Benzene	100%	No Effect
Dioxane	100%	No Effect
Furfural	--	No Effect

CHEMICAL – DYES		
Congo Red	1%	No Effect
Eosin Y	0.5%	No Effect
Gentian Violet	1%	No Effect
Indigo Carmen	0.5%	No Effect
Methyl Green	0.5%	No Effect
Wrights Blood Stain	0.35%	No Effect

1.06 SUBMITTALS

A. Submittals shall be furnished in accordance with Section 01 3300 – Submittal Procedures.

B. Shop Drawings: Provide 3/4" = 1'-0" scale elevations of individual and battery of casework units, cross sections, rough-in and anchor placements, tolerances, and clearances. Indicate relation of units to surrounding walls, windows, doors, and other building components. Provide 1/4" = 1'0" rough-in plan drawings for coordination with trades. Rough-in shall show free area.

C. Product Data: Submit manufacturer's data for each component and item of laboratory equipment specified. Include component dimensions, configurations, construction details, joint details, and attachments, utility and service requirements and locations.

D. Product Samples Upon Request: Submit for approval:
   1. Top sample
   2. Finish sample (3" X 5" painted steel)

E. Test Reports: When requested by The Town submit independent, third party, laboratory certified test reports verifying conformance to test performance specified.

1.07 QUALITY ASSURANCE

A. Single source responsibility: Casework, work surfaces, laboratory fume hood and equipment and accessories shall be manufactured or furnished by a single laboratory furniture company.

B. All casework construction and performance characteristics shall be in full compliance with SEFA 8 standards. At the owner’s request, independent, third party testing must be submitted validating compliance and adheres to the architectural specifications.

C. Manufacturer's qualifications: Modern plant with proper tools, dies, fixtures and skilled workmen to produce high quality laboratory casework and equipment, and shall meet the following minimum requirements:
   1. Ten years or more experience in manufacture of laboratory casework and equipment of type specified.
   2. Ten installations of equal or larger size and requirements.

D. Installer's qualifications: Factory trained and/or certified by the manufacturer.

E. Cabinet identification: Cabinets are identified on drawings by manufacturer's catalog numbers. Unless otherwise modified on drawings or in specifications, catalog description constitutes specific requirements for each type of cabinet.

1.08 REFERENCE STANDARDS

A. All casework, worksurface and service fixture construction and performance characteristics shall be in full compliance with SEFA (Scientific Equipment and Furniture Association) standards. At the owner’s request, independent, third party testing must be submitted validating compliance and adheres to the architectural specifications.
   1. SEFA 1.2 – Laboratory Fume Hoods
   2. SEFA 2.3 – Installation of Scientific Laboratory Furniture and Equipment
   3. SEFA 3 – Work Surfaces
   4. SEFA 7 – Laboratory and Hospital Fixtures
   5. SEFA 8 – Laboratory Furniture

1.09 DELIVERY, STORAGE AND HANDLING

A. Schedule delivery of casework and equipment so that spaces are sufficiently complete and material can be installed immediately following delivery.

B. Protect finished surfaces from soiling or damage during handling and installation. Keep covered with polyethylene film or other protective coating.

C. Protect all work surfaces throughout construction period with 1/4" corrugated cardboard completely covering the top and securely taped to edges. Mark cardboard in large lettering "No Standing."

1.10 PROJECT CONDITIONS

A. Do not deliver or install equipment until the following conditions have been met:
   1. Windows and doors are installed; and the building is secure and weather tight.
   2. Ceiling, overhead ductwork and lighting are installed.
   3. All painting is completed and floor tile is installed.

PART 2 – PRODUCTS

2.01 MANUFACTURER

A. Design, materials, construction, and finish of casework specified are the minimum acceptable standard of quality for inset steel laboratory casework. The basis of this product specification is Fisher Hamilton L.L.C., 1316 18th Street, Two Rivers, WI 54241.

2.02 CASEWORK MATERIALS

A. Sheet steel: Mild, cold rolled and leveled unfinished steel

B. Minimum gauges:
   1. 20 gauge: Solid door interior panels, drawer fronts, scribing strips, filler panels, enclosures, drawer bodies, shelves, security panels, and sloping tops.
   2. 18 gauge: Case tops, ends, bottoms, bases, backs, vertical posts, uprights, glazed door members, door exterior panels, and access panels.
   3. 16 gauge: Top front rails, top rear gussets, intermediate horizontal rails, table legs and frames, leg rails, and stretchers.
   4. 14 gauge: Drawer suspensions, door and case hinge reinforcements, and front corner reinforcements.
   5. 11 gauge: Table leg corner brackets and gussets for leveling screws.

C. Glass for glazed sliding doors and unframed doors:
   1. 6mm Clear Float Glass (unframed)

2.03 CASEWORK FABRICATION

A. Base Units and Cases:
   1. Base units and 37"-high wall cases: End panels and back reinforced with internal reinforcing front and rear posts.
   2. Posts: Front post fully closed with full height reinforcing upright. Shelf adjustment holes in front and rear posts shall be perfectly aligned for level setting, adjustable to 1/2" o.c.
   3. Secure intersection of case members with spot and arc welds. Provide gusset reinforcement at front corners.
   4. Base unit backs: Provide drawer units without backs and cupboard units with removable backs for access to services behind units.
   5. Base unit backs: Provide fixed backs at all drawer and cupboard units. No access to services behind.
   6. Bottoms: Base units and 37"-high wall cases shall have one piece bottom with front edge formed into front rail, rabbeted as required for swinging doors and drawers and flush design for sliding doors.
   7. Top rail for base units: Interlock with end panels, flush with front of unit.
   8. Horizontal intermediate rails: Recessed behind doors and drawer fronts.
   9. Base for base units: 4" high x 3" deep with formed steel base and 11 gauge die formed steel gussets at corners. Provide 3/8" diameter leveling screw with integral bottom flange of minimum 0.56 sq. in. area at each corner, accessible through openings in toe space.

B. Drawers: Steel
   1. Drawer fronts: 3/4" thick, double wall construction, pre-painted prior to assembly and sound deadened.
   2. Drawer bodies: Bottom and sides formed into one-piece center section with bottom and sides coved and formed top edges. Front and back panels spot welded to center section.

3. Drawer suspension: Heavy duty coved raceways for both case and drawer with nylon tired, ball bearing rollers; self-centering and self-closing when open to within 3" of the closed position.
4. Provide drawer with rubber bumpers. Friction centering devices are not acceptable.
5. Provide security panels for drawers with keyed different locks.
6. File drawers: Provide with 150 lbs. full extension slides for full access and operation.

C. Drawer suspension:
1. Heavy duty coved raceways for both case and drawer with nylon tired, ball bearing rollers; self-centering and self-closing when open to within 3" of the closed position.
2. Accuride or ENGINEER-approved equal 150-lb. full extension drawer slides. File drawers: Provide with 150# full extension slides for full access and operation.
3. Provide drawer with rubber bumpers. Friction centering devices are not acceptable.

D. Doors: Steel
1. Solid panel doors: 3/4" thick, double wall, telescoping box steel construction with interior prepainted and sound deadened. Reinforce interior of front panel with welded steel hat channels. Hinges with screws to internal 14 gauge reinforcing in case and door. Hinges shall be removable; welding of hinges not acceptable. Doors shall close against rubber bumpers.
2. Unframed sliding glass doors: Glass with edges ground set in extruded aluminum shoe with integral pulls, wheel assemblies and top and bottom extruded aluminum track. Provide rubber bumpers at fully opened and closed door position.

E. Shelves:
1. Form front and back edges down and back 3/4". Form ends down 3/4”.
2. Reinforce shelves over 36" long with welded hat channel reinforcement the full width of shelf.
3. Pull out shelves: Same suspension as specified for drawers.

F. Base molding: 4" high, to be furnished and installed by flooring contractor.

G. Corner base guards: 4" high #304 stainless steel corner guards.

H. Hardware:
1. Drawer and hinged door pulls: Clear anodized extruded aluminum, screw attached on 4" centers.
a. Pull Location
1) Configuration 1
Horizontal at drawers, vertical at doors
Brushed Aluminum rectangular style finger pull
2. Sliding door pulls: Recessed stainless steel, styled as shown and sized to harmonize with drawer pulls.
3. Hinges: Institutional type, five knuckle projecting barrel hinges, minimum 2-1/2" long, type 302 or 304 stainless steel. Provide two hinges for doors up to 36" high; three hinges for doors over 36" high. Drill each leaf for three screw attachment to door and frame.
4. Door catches: Adjustable type, spring actuated nylon roller catches.
5. Elbow catches: Spring type of cadmium plated steel, with strike of suitable design.

2.04 METAL FINISH

A. Metal finish:
1. Preparation: Spray clean metal with a heated cleaner/phosphate solution, pre-treat with iron phosphate spray, water rinse, and neutral final seal. Immediately dry in heated ovens, gradually cooled, prior to application of finish.

2. Application: Electrostatically apply urethane powder coat of selected color and bake in controlled high temperature oven to assure a smooth, hard satin finish. Surfaces shall have a chemical resistant, high grade laboratory furniture quality finish of the following thickness: Liquid, dipped, solvent based finishes are not and will not be acceptable.
3. Color: Chameleon
   a. Exterior and interior exposed surfaces: 1.5 mil average and 1.2 mil min.
   b. Backs of cabinets and other surfaces not exposed to view: 1.2 mil average.

B. Cabinet Surface Finish Tests:

All casework construction and performance characteristics shall be in full compliance with SEFA 8 standards. At the owner's request, independent, third party performance testing must be submitted validating compliance and adheres to the finish specifications.

1. Chemical Spot Test
   a. Purpose of Test
      1) The purpose of the chemical spot test is to evaluate the resistance a finish has to chemical spills.

         Note: Many organic solvents are suspected carcinogens, toxic and/or flammable. Great care should be exercised to protect personnel and the environment from exposure to harmful levels of these materials.

      2) Test Procedure
         (a) Obtain one sample panel measuring 14" x 24" (355.6mm x 609.6mm). The received sample to be tested for chemical resistance as described herein.
         (b) Place panel on a flat surface, clean with soap and water and blot dry. Condition the panel for 48-hours at 73±3°F / 23±2°C and 50±5% relative humidity. Test the panel for chemical resistance using forty-nine different chemical reagents by one of the following methods:
         (c) Method A – Test volatile chemicals by placing a cotton ball saturated with reagent in the mouth of a one-ounce (29.574cc) bottle and inverting the bottle on the surface of the panel.
         (d) Method B – Test volatile chemicals by placing five drops of the reagent on the surface of the panel and covering with a 24mm watch glass, convex side down.
         (e) For both of the above methods, leave the reagents on the panel for a period of one hour. Wash off the panel with water, clean with detergent and naphtha, and rinse with deionized water. Dry with a towel and evaluate after 24-hours at 73±3°F / 23°±2°C and 50±5% relative humidity using the following rating system:
            (1) Level 0: No detectable change
            (2) Level 1: Slight change in color or glos
            (3) Level 2: Slight surface etching or severe staining.
            (4) Level 3: Pitting, cratering, swelling, or erosion of coating. Obvious and significant deterioration.

Test #	Chemical Reagent	Test Method
1	Acetate, Amyl	A
2	Acetate, Ethyl	A
3	Acetic Acid, 98%	B
4	Acetone	A
5	Acid Dichromate, 5%	B
6	Alcohol, Butyl	A

7	Alcohol, Ethyl	A
8	Alcohol, Methyl	A
9	Ammonium Hydroxide, 28%	B
10	Benzene	A
11	Carbon Tetrachloride	A
12	Chloroform	A
13	Chromic Acid, 60%	B
14	Cresol	A
15	Dichlor Acetic Acid	A
16	Dimethylformanide	A
17	Dioxane	A
18	Ethyl Ether	A
19	Formaldehyde, 37%	A
20	Formic Acid, 90%	B
21	Furfural	A
22	Gasoline	A
23	Hydrochloric Acid, 37%	B
24	Hydrochloric Acid, 48%	B
25	Hydrogen Peroxide, 3%	B
26	Iodine, Tincture of	B
27	Methyl Ethyl Ketone	A
28	Methylene Chloride	A
29	Mono Chlorobenzene	A
30	Naphthalene	A
31	Nitric Acid, 20%	B
32	Nitric Acid, 30%	B
33	Nitric Acid, 70%	B
34	Phenol, 90%	A
35	Phosphoric Acid, 85%	B
36	Silver Nitrate, Saturated	B
37	Sodium Hydroxide, 10%	B
38	Sodium Hydroxide, 20%	B
39	Sodium Hydroxide, 40%	B
40	Sodium Hydroxide, Flake	B
41	Sodium Hydroxide, Saturated	B
42	Sulfuric Acid, 33%	B
43	Sulfuric Acid, 77%	B
44	Sulfuric Acid, 96%	B

Test #	Chemical Reagent	Test Method
45	Sulfuric Acid, 77% and Nitric Acid 70%, equal parts	B
46	Toluene	A
47	Trichloroethylene	A
48	Xylene	A
49	Zinc Chloride, Saturated	B

3) Acceptance Level
   (a) Results will vary from manufacturer to manufacturer. Laboratory grade finishes should result in no more than four Level 3 conditions. Suitability for a given application is dependent upon the chemicals used in a given laboratory.

b. Hot Water Test
   1) Purpose of Test
      (a) The purpose of this test is to insure the coating is resistant to hot water.
   2) Test Procedure
      (a) Hot water, 190°F to 205°F (88°C to 96°C), shall be allowed to trickle (with a steady stream and at a rate of not less than 6 ounces (177.44 cc) per minute on the surface, which shall be set at an angle of 45° for a period of five minutes.
   3) Acceptance Level
      (a) After cooling and wiping dry, the finish shall show no visible effect from the hot water.

c. Impact Test
   1) Purpose of Test
      (a) The purpose of this test is to evaluate the ductility of the coating.
   2) Test Procedure
      (a) A one-pound ball approximately 2" (50.8mm) in diameter shall be dropped from a distance of 12" (304.8mm) onto a flat horizontal surface, coated to manufacturer's standard manufacturing method.
   3) Acceptance Level
      There shall be no visible evidence to the naked eye of cracks or checks in the finish due to impact.

d. Paint Adhesion on Steel Test
   1) Purpose of Test
      (a) The paint adhesion test is used to determine the bond of the coating to steel. This does not apply to non-steel products.
   2) Test Procedure
      (a) This test is based on ASTM D2197-86 "Standard Method of Test for Adhesion of Organic Coating". Two sets of eleven parallel lines 1/16" (1.587mm) apart shall be cut with a razor blade to intersect at right angles thus forming a grid of 100 squares. The cuts shall be made just deep enough to go through the coating, but not into the substrate. They shall then be brushed lightly with a soft brush for one minute. Examine under 100-foot candles of illumination.
   3) Acceptance Level
      Ninety or more of the squares shall show finish intact.

e. Paint Hardness on Steel Test
   1) Purpose of Test
      (a) The paint hardness test is used to determine the resistance of the coatings to scratches.
   2) Test Procedure
      (a) Pencils, regardless of their brand, are valued in this way: 8-H is the hardest, and next 11 order of diminishing hardness are 7-H, 6-H, 5-H, 4-H, 3-H, 2-H, H, F, HB, B (soft), 2-B, 3-B, 4-B, 5-B (which are softest).
      (b) The pencils shall be sharpened on emery paper to a wide sharp edge. Pencils of increasing hardness shall be pushed across the paint film in a chisel-like manner until one is found that will cut or scratch the

film. The pencil used before that one, that is the hardest pencil that will not rupture the film, is then used to express or designate the hardness.

3) Acceptance Level
   (a) The paint shall have a hardness of 4-H minimum with no visible puncture of the finish surface.

2.05 EPOXY RESIN WORK SURFACE

A. Material: Chemical and abrasion resistant, durable top of one inch thick cast material of epoxy resins and inert products, cast flat, with a uniform non-glare black matte finish.

B. Backsplash curb: Same material as top, four (4) inches high, butt jointed and cemented to top. Provide where tops abut wall surfaces. Include end curb where top abuts end wall.

2.06 SINKS, DRAINS AND TRAPS

A. Stainless steel sinks: Type 304 stainless steel, No. 4 polish. Provide in 16 gauge material; 14 gauge for sinks with integral fixture ledge, used primarily for hand washing.
   1. Provide ½" radius cove at vertical and horizontal corners and pitch bottom to drain plug.
   2. Seamless joints: Electrically weld, grind and polish smooth all joints rendering joints seamless.
   3. Include crumb cup strainer with tail piece.
   4. Apply heavy mastic type sound deadening coating to underside.
   5. Except for sinks integral with stainless steel top, mount sinks with integral frame; separate frames or mounting rims not acceptable.
   6. Size: 18" x 15" x 10.8" deep or as shown in plans.
   7. Drain Location: Center or as shown in plans.
   8. Fisher Hamilton Model No. D-30c or ENGINEER-approved equal. .

2.07 LABORATORY FITTINGS

A. Water Saver Service Fittings:
   1. Water service faucets and valves shall have renewable unit containing all working parts subject to wear, including replaceable stainless steel seat. Unit shall have serrations for position locking into valve body.
   2. Gooseneck vacuum breakers: Brass forgings integral with gooseneck, with renewable seat and special design valve member for fine flow control.
   3. Goosenecks shall have separate 3/8" IPS coupling securely brazed to gooseneck to provide full thread for attachment of anti-splash outlet fittings, serrated tips and filter pumps.

B. Air, Gas and Vacuum Systems Fittings:
   1. Needle valves: Small pattern needle valve, straightaway type with stainless steel replaceable floating cone and brass seat (non-renewable). Ten serration end is integral with valve body.
   2. Ground key cocks: Straightaway ground key cocks, individually ground and lapped and tested at 100 psi. air under water. Cocks shall have a single arm long easy grip handle with screw-on type index. Ten serrated end is integral with valve body.

C. Handles for service cocks, faucets and remote controls: Four-arm type except ground key cocks. Provide removable screw-on type colored plastic discs with letter stamped on disc in contrasting color as scheduled below:

Gas	Blue/White	Gas
Vacuum	Yellow/Black	Vac.
Compressed Air	Orange/White	C-Air
Cold Water	Green/White	C.W.
Hot Water	Red/White	H.W.
Steam	Black/White	Stm.
Chilled Water	Brown/White	CH.
Distilled Water	White/Black	D.W.

Disk color for special services as determined by the OWNER.

D. Fixture finish: Chrome finish developed by the following sequence of platings over properly prepared brass castings or forgings:

Plating	Minimum Plating Thickness
Chromium (Final)	0.000015 IN.

PART 3 – EXECUTION

3.01 INSTALLATION

A. Casework installation:
   1. Set casework components plumb, square, and straight with no distortion and securely anchored to building structure. Shim as required using concealed shims.
   2. Bolt continuous cabinets together with joints flush, tight and uniform, and with alignment of adjacent units within 1/16" tolerance.
   3. Secure wall cabinets to solid supporting material, not to plaster, lath or gypsum board.
   4. Abut top edge surfaces in one true plane. Provide flush joints not to exceed 1/8" between top units.

B. Work surface installation:
   1. Where required due to field conditions, scribe to abutting surfaces.
   2. Only factory prepared field joints, located per approved shop drawings, shall be permitted. Secure joints in field, where practicable, in the same manner as in factory, with dowels, splines, adhesive or fasteners recommended by manufacturer.
   3. Secure work surfaces to casework and equipment components with material and procedures recommended by the manufacturer.

C. Sink installation: Sinks which were not factory installed shall be set in chemical resistant sealing compound and secured and supported per manufacturer's recommendations.

D. Accessory installation: Install accessories and fittings in accordance with manufacturer's recommendations. Turn screws to seat flat; do not drive.

3.02 ADJUSTING

A. Repair or remove and replace defective work, as directed by The Town upon completion of installation.

B. Adjust doors, drawers, hardware, fixtures and other moving or operating parts to function smoothly.

3.03 CLEANING

A. Clean shop finished casework, touch up as required.

B. Clean countertops with diluted dishwashing liquid and water leaving tops free of all grease and streaks. Use no wax or oils.

3.04 PROTECTION OF FINISHED WORK

A. Provide all necessary protective measures to prevent exposure of casework and equipment from exposure to other construction activity.

B. Advise CONTRACTOR of procedures and precautions for protection of material, installed laboratory casework and fixtures from damage by work of other trades.

END OF SECTION

SECTION 22 0529 – HANGERS AND SUPPORTS FOR PLUMBING PIPING AND EQUIPMENT

PART 1 - GENERAL

1.01 THE REQUIREMENT

A. Provide pipe supports, hangers, guides, and anchors, complete, in accordance with these Specifications and the Contract Documents.

B. American Iron and Steel (AIS) requirement applies to this Section. All iron and steel products used in this project must be produced in the United States.

1.02 SUBMITTALS

A. Submittals shall be in accordance with Section 01 3300 – Submittal Procedures.

B. Shop Drawings shall include the following information:
   1. Drawings of pipe supports, hangers, anchors, and guides
   2. Calculations for special supports and anchors.

PART 2 - PRODUCTS

2.01 GENERAL REQUIREMENTS

A. Code Compliance: All piping systems and pipe connections to equipment shall be properly anchored and supported to prevent undue deflection, vibration, dislocation due to line pressures, and stresses on piping, equipment, and structures. All supports and parts thereof shall conform to the requirements of ANSI/ASME B31.1 - Power Piping, except as supplemented or modified in the tables within this Specification. Supports for plumbing piping shall be in accordance with the latest edition of the applicable plumbing code or local administration requirements.

B. Structural Members: Wherever possible, pipes shall be supported from structural members. Where it is necessary to frame structural members between existing members, such supplementary members shall be provided. All supplementary members shall be in accordance with the requirements of the building code and the American Institute of Steel Construction.

C. Pipe Hangers: Pipe hangers shall be capable of supporting the pipe in all conditions of operation, allowing free expansion and contraction of the piping, and preventing excessive stress on equipment. All hangers shall have a means of vertical adjustment after erection. Hangers shall be designed to prevent becoming disengaged by any movement of the supported pipe. Hangers subject to shock or thrust imposed by the actuation of safety valves, shall include hydraulic shock suppressors. All hanger rods shall be subject to tensile loading only.

D. Hangers Subject to Horizontal Movements: At hanger locations where lateral or axial movement is anticipated, suitable linkage shall be provided to permit such movement. Where horizontal pipe movement is greater than 1/2-inch, or where the hanger rod deflection from the vertical is greater than 4 degrees from the cold to the hot position of the pipe, the hanger rod and structural attachment shall be offset in such a manner that the rod is vertical in the hot position.

E. Spring-Type Hangers: Spring-type pipe hangers shall be provided for piping subject to vibration or vertical expansion and contraction, such as engine exhausts and similar piping. All spring-type hangers shall be sized to the manufacturer's printed recommendations and the loading conditions encountered. Variable spring supports shall be provided with means to limit misalignment, buckling, eccentric loading, or to prevent overstressing of the spring, and with means to indicate at all times the

compression of the spring. Supports shall be capable of accommodating at least 4 times the maximum travel due to thermal expansion.

F. Thermal Expansion: Wherever expansion and contraction of piping is expected, a sufficient number of expansion loops or joints shall be provided, together with the necessary rolling or sliding supports, anchors, guides, pivots, and restraints permitting the piping to expand and contract freely in directions away from the anchored points. All components shall be structurally suitable to withstand all loads imposed.

G. Heat Transmission: Supports, hangers, anchors, and guides shall be so designed and insulated, that excessive heat will not be transmitted to the structure or to other equipment.

H. Riser Supports: Where practical, risers shall be supported on each floor with riser clamps and lugs, independent of the connected horizontal piping.

I. Freestanding Piping: Free-standing pipe connections to equipment such as chemical feeders and pumps shall be firmly attached to steel frames fabricated from angles, channels, or I-beams anchored to the structure. Exterior, free-standing overhead piping shall be supported on fabricated pipe stands consisting of pipe columns anchored to concrete footings, with horizontal, welded steel angles and U-bolts or clamps securing the pipes.

J. Materials of Construction:
   1. General: All pipe support assemblies, including framing, hardware, and anchors, shall be steel construction, galvanized after fabrication, unless otherwise indicated.
   2. Submerged Supports: All submerged piping, as well as piping, conduits, and equipment in hydraulic structures within 24 inches of the water level, shall be supported with support, assemblies, including framing, hardware, constructed of Type 304 stainless steel, unless otherwise indicated. All bolts and nuts shall be 316 stainless steel conforming to ASTM A193, Grade B8M, for bolts and ASTM A194, Grade 8M, for nuts.

K. Point Loads: Any meters, valves, heavy equipment, and other point loads on PVC, FRP, and other plastic pipes, shall be supported on both sides, according to manufacturer's recommendations to avoid undue pipe stresses and failures. To avoid point loads, all supports on PVC, FRP, and other plastic piping shall be equipped with extra wide pipe saddles or galvanized steel shields.

L. Noise Reduction: To reduce transmission of noise in piping systems, all copper tubes in buildings and structures shall be wrapped with a 2-inch-wide strip of rubber fabric or similar, suitable material at each pipe support, bracket, clip, or hanger.

2.02 SUPPORT SPACING

A. Supports for piping with the longitudinal axis in approximately a horizontal position shall be spaced to prevent excessive sag, bending, and shear stresses in the piping, with special consideration given where components such as flanges and valves impose concentrated loads. Pipe support spacing shall not exceed the maximum spans in the tables on the following pages. For temperatures other than ambient temperatures, or those listed, and for other piping materials or wall thicknesses, the pipe support spacings shall be modified in accordance with the pipe manufacturer's recommendations. Vertical supports shall be provided to prevent the pipe from being overstressed from the combination of all loading effects.

1. Support Spacing for Schedule 40 and Schedule 80 Steel Pipe:

Normal Pipe Diameter (inches)	Maximum Span (feet)
1/2	6
3/4 and 1	8
1 1/4 to 2	10
3	12
4	14
6	17
8 and 10	19
12 and 14	23
16 and 18	25
20 and greater	30

2. Support Spacing for Welded Fabricated Steel Pipe:
The support spacing shall be designed so that the stress on the pipe does not exceed 5,000 psi. Maximum deflection of pipe shall be limited to 1/360th of the span and shall be calculated by using the formula:

$$L = (7500tD/(32t+D))1/2$$

where:

t=Thickness (inches)
D=Diameter (inches)
L=Maximum span (feet)

3. Support Spacing for Ductile-Iron Pipe:

Normal Pipe Diameter (inches)	Maximum Span (feet)
All diameters	Two supports per pipe length or 10 feet (one of the 2 supports located at joint)

4. Support Spacing for Copper Tubing:

Normal Pipe Diameter (inches)	Maximum Span (feet)
1/2 to 1 1/2	6
2 to 4	10
6 and greater	12

5. Support Spacing for Schedule 40 or 80 PVC Pipe:

Normal Pipe Diameter (inches)	Maximum Span (at 100°F) (feet)
1/2	4
3/4	4
1	5
1 1/4	5
1 1/2	5
2	6
3	7
4	8
6	10
8	11
10	12
12	13

2.03 MANUFACTURED SUPPORTS

A. Stock Parts: Where not specifically indicated, designs which are generally accepted as exemplifying good engineering practice and use stock or production parts, shall be utilized wherever possible. Such parts shall be locally available, new, of best commercial quality, designed and rated for the intended purpose.

B. Manufacturers, or ENGINEER-approved equal:
   1. TOLCO Inc.
   2. Bergen-Paterson Pipesupport Corp., Woburn, MA
   3. Grinnell Corp. (Supply Sales Company), Cranston, RI
   4. NPS Products, Inc., Westborough, MA
   5. Power Piping Company, Pittsburgh, PA
   6. ZSI

2.04 COATING

A. Galvanizing: Unless otherwise indicated, all fabricated pipe supports other than stainless steel or non-ferrous supports shall be blast-cleaned after fabrication and hot-dip galvanized in accordance with ASTM A123 - Specifications for Zinc (Hot-Dip Galvanized) Coatings on Iron and Steel Products.

B. Other Coatings: Other than stainless steel or non-ferrous supports, all supports shall receive protective coatings in accordance with the requirements of applicable Sections in Division 09 – Finishes.

PART 3 - EXECUTION

3.01 INSTALLATION

A. General: All pipe supports, hangers, brackets, anchors, guides, and inserts shall be fabricated and installed in accordance with the manufacturer's printed instructions and ANSI/ASME B31.1 - Power Piping. All concrete inserts for pipe hangers and supports shall be coordinated with the formwork.

B. Appearance: Pipe supports and hangers shall be positioned to produce an orderly, neat piping system. All hanger rods shall be vertical, without offsets, unless noted otherwise. Hangers shall be adjusted to line up groups of pipes at the proper grade for drainage and venting, as close to ceilings or roofs as possible, without interference with other work.

3.02 FABRICATION

A. Quality Control: Pipe hangers and supports shall be fabricated and installed by experienced welders and fitters, using the best welding procedures available. Fabricated supports shall be neat in appearance without sharp corners, burrs, and edges.

END OF SECTION

SECTION 22 1000 – PLUMBING PIPING

PART 1 - GENERAL

1.01 THE REQUIREMENT

A. Furnish all drainage and vent piping, cleanouts and access panels, floor drains, hot and cold water piping, valves, piping specialties and appurtenances, supports and anchors, and plumbing and piping insulation in accordance with the Contract Documents.

B. American Iron and Steel (AIS) requirement applies to this section. All iron and steel products used in this project must be produced in the United States.

1.02 SUBMITTALS

A. Furnish submittals in accordance with Section 01 3300 – Submittal Procedures.

B. Product data to be submitted:
   1. Materials list of items proposed to be provided under this Section.
   2. Manufacturer's specifications, catalog cuts, and other data needed to prove compliance with the specified requirements.
   3. Shop Drawings and other data as required indicating method of installing and attaching equipment, except where such details are fully shown on the Drawings.

C. Sterilization Certificate: Upon completion of water line sterilization, deliver to the ENGINEER two copies of an acceptable "Certificate of Performance" for that activity.

D. Cathodic Protection:
   1. Upon completion of the work of this Section, deliver to the ENGINEER sufficient data to prove that wrapping of steel piping has been tested and meets the specified requirements.
   2. Show date of inspection, voltages used, and name and address of the inspector.

1.03 QUALITY ASSURANCE

A. Use adequate numbers of skilled workmen who are thoroughly trained and experience in the necessary crafts and who are completely familiar with the specified requirements and the methods needed for proper performance of the work of this Section.

B. Codes and Regulations:
   1. In additions to complying with the specified requirements, comply with pertinent regulations of governmental agencies having jurisdiction.
   2. In the event of conflict between or among specified requirements and pertinent regulations, the more stringent requirement will govern when so directed by the Engineer.
   3. Plumbing Code Compliance: Comply with applicable portions of the Uniform Plumbing Code pertaining to selection and installation of plumbing materials and products.

PART 2 - MATERIALS

2.01 PIPE MATERIALS

A. Provide pipes and pipe fittings complying with these Specifications and in accordance with the following listings:

B. Cast Iron Soil Pipe and Fittings:
   1. Service weight cast iron conforming to ASTM A74, hubless type, asphaltic coated.
   2. Joints shall be made with cast iron mechanical couplings or stainless-steel sleeves with neoprene gaskets.

C. Galvanized or Black Steel Pipe:
   1. 3 inches and Smaller – ASTM A120. Schedule 40, black or hot-dipped galvanized, welded, or seamless steel pipe, threaded or coupled.
   2. 4 inches and Larger – ASTM A53. Grade A or B, Schedule 40, black or hot dipped galvanized, welded, or seamless steel pipe, threaded.
   3. Fittings: FS WW-P521, 150 psi, malleable iron. Black or hot dipped galvanized ASTM A153.
   4. Unions: FS WW-U-531, Type B, black or hot dipped galvanized, Class 2, 250 psi, malleable iron, ground joint and brass seat.
   5. Sealing Paste or Tape: Teflon.
   6. Corrosion Protective Wrap: Polyvinyl chloride or Polyethylene pressure sensitive tape, 20-mil nominal thickness (one layer 20 mil or two layers 10 mil).
   7. Primer: 3M “Scotchwrap Pipe Primer.”

D. Copper Pipe and Fittings:
   1. Pipe: Underground, ANSI/ASTM B88, Type K, hard temper, seamless water tube.
   2. Fittings: ANSI/ASME B16.22. wrought copper or brass solder-joint fittings.
   3. Solder: Lead-free, silver tin-antimony solder 95-5, or tin-silver solder 96.5-3.5, 95.5, or 94-6, with mildly corrosive liquid or petroleum-based past flux containing chlorides of zinc and ammonium.

E. ABS: (Acrylonitrile Butadiene Styrene) plastic, drain, waste and vent pipe.
   1. Pipe and Fittings: ASTM D2661; ASTM F628; CSA B181.1.
   2. Solvent Cement: As recommended by the pipe manufacturer.

F. Polypropylene Drain, Waste and Vent Pipe:
   1. Flame retardant polypropylene material conforming to ASTM D2146 and flammability based on ASTM D635.
   2. Pipe shall be produced to Schedule 40 Iron Pipe size dimensional standards, including wall
   3. Fitting design shall be based upon the laying length dimensions in ANSI B16-12 for case iron screwed drainage fittings. Fitting wall thicknesses shall be measured in accordance with ASTM D2122, Section 4, and interval diameters shall be measured in accordance with ASTM D2122, Section 7.
   4. In concealed locations, joints shall be made by the electrical fusion method. In exposed or easily accessible locations, mechanical joint polypropylene fittings and joints may be used.
   5. Pipe and fittings shall be GSR Fuseal, manufactured by R & G Sloane Co., or ENGINEER-approved equal.

G. Polyvinyl Chloride (PVC):
   1. General: PVC materials for pipe and fittings shall conform to ASTM D1784, Cell Classification 12454-B. Pipe and fitting materials shall be specially formulated with sufficient UV protection additives to provide for long term outdoor exposure with no deleterious effects. Flanges shall be one-piece solid design or two-part van stone type which utilize the tapered, serrated face and full face gasket technique for joining and are compatible with ANSIN16.5 Class 150 metal flanges. Unions shall be the O-ring type having interchangeable components with true union valves for maximum system versatility.
   2. Schedule 40, 80, and 120: Pipe in accordance with ASTM D1785. Schedule 80 PVC socket type fittings shall conform to ASTM D2467. Schedule 40 PVC fittings shall conform to ASTM D2466. PVC solvent weld cement for socket connections shall meet the requirement of ASTM D2564/ Schedule 80 PVC threaded fittings shall conform to ASTM D2464.

2.02 TRENCH DRAINS

A. Trench Drain Channels:
   1. Trench drain channels shall be made of cast iron. All channels shall interlock with tongue and groove connections with adjoining channels. Each channel shall have horizontal anchoring ribs to mechanically lock the channel into the floor slab or pavement.
   2. Channels shall have available vertical cut outs for 4-inch or 6-inch discharge and available 4-inch or 6-inch horizontal outlet end caps. Channels shall have a built-in bottom slope of 0.6 percent.

B. Channel Grates: Channel grates shall be for heavy duty service made of Vinylester FRP or ENGINEER-approved equal. Grates should be securely locked down with built-in channel lock blocks. Locking mechanism shall be designed so as to provide an obstruction-free trench for maintenance and cleaning as well as to prevent concrete from entering channels during installation. FRP gates should comply with the Contract Documents.

C. Catch Basins: Catch basins shall be pre-cast polymer concrete with FRP grates. Any trench drains entering catch basins shall interlock fully with tongue and groove connections.

D. Joint Sealers: To prevent leakage, joints between channels, catch basin connections, etc., shall be sealed with an adhesive recommended by the manufacturer.

E. Manufacturers: Trench drains shall be as manufactured by Neenah Foundry; or ENGINEER-approved equal.

2.03 PIPE HANGERS

A. Water Piping:
   1. Split ring hangers with supporting rods, Grinnel Fig. 108; Elcen Fig. 10, or ENGINEER-approved equal.
   2. Semco “trisolators” or ENGINEER-approved equal.
   3. Channel mounted clamping system, Cush-A-Clamp per ZSI, or ENGINEER-approved equal.

B. Soil and Waste Piping:
   1. Variable ring hangers with supporting rods, Grinnel Fig. 108; Elcen 10, or ENGINEER-approved equal.
   2. Riser clamps at each floor and as required, Grinnell Fig. 261; Elcen Fig. 39 or ENGINEER-approved equal.
   3. Channel mounted clamping system, Cush-A-Clamp per ZSI, or ENGINEER-approved equal.

C. Gas Piping: Split ring hangers with supporting rods, Grinnel Fig. 108; Elcen Fig. 10, or ENGINEER-approved equal.

2.04 PIPE INSULATION

A. Hot and Cold Water (Exposed to Freezing Conditions): Molded fiberglass insulation jacketed with PVC jacketing. Provide.016 mil embossed aluminum weather protective jacket for outdoor application. Insulation 2-inch thick for pipe sizes less than 6-inch. Flame spread rating of 25 or less and smoke developed ratings of 50 or less per ASTM E84-89a. Manville “Micro-Lok AP”; Owens/Corning Fiberglass “SSL-11,” or ENGINEER-approved equal.

2.05 VALVES: Valves: Isolation valves shall be bronze valves with ends to suit pipe. Valves shall be rated for a working pressure of 150 psi.

A. Bronze Ball Valve: Two-Piece, Full-Port, Bronze Ball Valves with Bronze Trim
   1. Manufacturers: Subject to compliance with requirements, provide products by one of the following or ENGINEER-approved equal:
      a. American Valve, Inc.
      b. Conbraco Industries, Inc.; Apollo Valves
      c. Hammond Valve
      d. Milwaukee Valve Company
      e. Watts Regulator Co.; a division of Watts Water Technologies, Inc.
   2. Description:
      a. Standard: MSS SP-110.
      b. SWP Rating: 150 psig (1035 kPa).
      c. CWP Rating: 600 psig (4140 kPa).
      d. Body Design: Two piece
      e. Body Material: Bronze
      f. Ends: Suit to pipe
      g. Seats: PTFE or TFE
      h. Stem: Bronze
      i. Ball: Chrome-plated brass
      j. Port: Full

B. Bronze Gate Valves: Class 150, Non-Rising Stem Bronze Gate Valves:
   1. Manufacturers: Subject to compliance with requirements, provide products by one of the following or ENGINEER-approved equal:
      a. Hammond Valve
      b. Milwaukee Valve Company
      c. Red-White Valve Corporation
      d. Watts Regulator Co.; a division of Watts Water Technologies, Inc.
      e. Conbraco Industries, Inc.; Apollo Valves
   2. Description:
      a. Standard: MSS SP-80, Type 1.
      b. CWP Rating: 300 psig (2070 kPa).
      c. Body Material: ASTM B62, bronze with integral seat and union-ring bonnet.
      d. Ends: Suit to pipe
      e. Stem: Bronze
      f. Disc: Solid wedge; bronze
      g. Packing: Asbestos-free
      h. Handwheel: Malleable iron (bronze, or aluminum).

2.06 OTHER MATERIALS

A. Provide other materials, not specifically described but required for a complete and proper installation, subject to the approval of the ENGINEER.

PART 3 - EXECUTION

3.01 SURFACE CONDITIONS

A. Examine the areas and conditions under which work of this Section will be performed. Correct conditions detrimental to timely and proper completion of the Work. Do not proceed until unsatisfactory conditions are connected.

3.02 PLUMBING SYSTEM LAYOUT

A. Lay out the plumbing system in careful coordination with the Drawings, determining proper elevations for all components of the system and using only the minimum number of bends to produce a satisfactorily functioning system.

B. Follow the general layout shown on the Drawings (where other work may interfere, consult with ENGINEER).

C. Lay out pipes to fall within partition, wall, or roof cavities, and to not require furring other than as shown on the Drawings.

3.03 TRENCHING AND BACKFILLING

A. Perform trenching and backfilling associated with the work of this Section in strict accordance with the provisions of applicable Sections of Division 31 – Earthwork.

B. Cut bottom of trenches to grade. Make trenches 12 inches wider than the greatest dimension of the pipe.

C. Bedding and Backfilling:
   1. Install piping promptly after trenching. Keep trenches open as short a time as practicable.
   2. Under the structures, install pipes on a 6-inch bed of damp sand. Backfill the bottom of slab with damp sand.
   3. Outside of the structures, install underground piping on a 6-inch bed of damp sand. Backfill to within 12-inch of finish grade with damp sand. Backfill remainder with native soil.
   4. Don not backfill until installation has been approved and until Project Record Documents have been properly annotated.

3.04 PIPE SCHEDULE: PIPE SIZES, SCHEDULE, AND MATERIAL TO BE INSTALLED PER DRAWINGS.

A. Interior and Exterior Water Piping and Compressed Air Piping:
   1. Pipe: Underground, ANSI/ASTM B88, Type K, hard temper, seamless copper water tube. Aboveground, ANSI/ASTM B88, Type L, hard drawn, seamless copper water tube.
   2. Fittings: ANSI/ASME B16.22, wrought copper or brass solder joint fittings.
   3. Solder: Lead-free, tin-antimony solder 95-5, or tin-silver solder 96.5-3.5, 95.5-5 or 94-6.

B. Above Ground Facility Drain Piping:
   1. Sizes 3-Inch and Smaller: PVC Schedule 40/80 or standard weight galvanized steel pipe, with black or galvanized cast iron fittings, drainage pattern and screwed joints, or provide service weight cast iron soil pipe and fittings.
   2. Sizes 4-Inch and Smaller: PVC Schedule 40/80 or service weight cast iron soil pipe, conforming to ASTM A74, hubless cast iron soil pipe fittings with cast iron mechanical couplings or stainless-steel sleeves with stainless steel bands and neoprene gaskets.

C. Above Ground Chemical Waste Piping: Schedule 40 flame retardant polypropylene, GSR Fuseal, or ENGINEER-approved equal, with electrical-resistance fusion joints and fittings, except that mechanical joints may be used in exposed or easily accessible location.

D. Vent Piping:
   1. Above Ground: Sizes 2-½ inches and smaller; Schedule 40 PVC or galvanized steel pipe ASTM A53, welded or seamless, with black or galvanized cast iron drainage fittings. Pipe sizes 3 inches or larger: PVC or Cast-iron soil pipe and fittings as specified above.
   2. Underground: PVC or Cast-iron soil pipes and fittings.

E. Underground Facility Drain Piping: Schedule 40/80 PVC or service weight cast iron soil pipe: Conforming to ASTM A74, bell and spigot cast iron soil pipe and cast iron bell and spigot fittings or hubless cast iron pipe with cast iron mechanical couplings or stainless steel sleeves with stainless steel bands and neoprene gaskets.

F. Underground Chemical Waste Piping: Schedule 40 flame retardant polypropylene pipe with electrical-resistance fusion joints, as specified above.

G. Facility Distribution Gas Piping: Schedule 40 black steel pipe with malleable iron threaded fittings.

3.05 INSTALLATION OF PIPING

A. General:
   1. Proceed as rapidly as the facility construction will permit.
   2. Thoroughly clean items before installation. Cap pipe openings to exclude dirt until fixtures are installed and final connections have been made.
   3. Cut pipe accurately and work into place without springing of forcing, properly clearing windows, doors, and other openings. Excessive cutting or other weakening of the structures will not be permitted.
   4. Remove cutting and threading burrs before assembling piping.
   5. Do not install defective piping of fittings. Do not use pipe with threads which are chipped, stripped, or damaged.
   6. Shoe no tool marks or threads on exposed plated, polished, or enameled connections from fixtures. Tape all finished surfaces to prevent damage during construction.
   7. Make changes in directions with fittings; make changes in main sizes with eccentric reducing fittings. Unless otherwise noted, install water supply and return piping with straight side of eccentric fittings at top of the pipe.
   8. Run horizontal sanitary and storm drainage piping at uniform grade of ¼-inch per foot, unless otherwise noted. Run horizontal water piping with an adequate pitch upwards in direction of flow to allow complete drainage.
   9. Provide sufficient swing joint, ball joints, expansion loops, and devices necessary for a flexible pipeline system, whether or not shown on the Drawings.
   10. Support piping independently at pumps, coils, tanks, and similar locations, so that weight of pipe will not be supported by the equipment.
   11. Pipe the drains from pump glands, drip pans, relief valves, air vents, and similar locations, to spill over an open sight drain, floor drain, or other acceptable discharge point, and terminate with a plain and unthreaded pipe 6 inches above the drain.
   12. Securely bolt all equipment, isolators, hangers, and similar items in place.
   13. Support each item independently from other pipes. Do not use wire for hanging or strapping pipes.
   14. Provide complete dielectric isolation between ferrous and non-ferrous metals.
   15. Provide union and shut off valves suitable located to facilitate maintenance and removal of equipment and apparatus.

B. Trapping and Venting of Fixtures:
   1. Trap and vent all plumbing fixtures in accordance with Uniform Plumbing Code adopted by the Western Plumbing Officials Association and local plumbing codes, whether or not shown on the Drawings. Strictly adhere to any local codes. Only exceptions to the above will be those fixtures which are especially noted herein or on the Drawings to be provided with special wastes.
   2. No vent shall intersect another vent at a point less than 6 inches above extreme overflow level of highest fixture served.
   3. Take vents off top half of horizontal runs and grade so as to free vents quickly of any water or condensation.

C. Installation of Compressed Air Piping: Run compressed air piping with pitch as shown, without pockets. Provide glove valve drips at low points. All branches shall be taken off tip of mains.

D. Equipment Access:
   1. Install piping, equipment, and accessories to permit access for maintenance. Relocate items as necessary to provide such access, and without additional cost to the Owner.
   2. Provide access doors where valves, motors, or equipment requiring access to maintenance are located in walls or chases or above ceilings. Coordinate location of access doors with other trades as required.

3.06 PIPE JOINTS

A. Copper Tubing
   1. Cut square, ream cut end and remove burrs, and clean inside of female fitting to a bright finish.
      a. Apply solder flux with brush to tubing.
      b. Apply flux to fitting socket.
      c. Remove internal parts of solder-end valves prior to soldering.
      d. Assemble.
      e. Remove excess flux.
      f. Apply heat and solder. Allow joint to cool.
   2. Provide dielectric unions at points of connection of copper tubing to ferrous piping and equipment.

B. Screwed Piping:
   1. Deburr cuts
      a. Do not ream exceeding internal diameter of the pipe.
      b. Thread to requirements of ANSI B2.1.
   2. Use Teflon tape on male thread prior to cleaning for air and oil piping.

C. Leaky Joints:
   1. Remake with new material.
   2. Remove leaky section and/or fitting as directed.
   3. Do not use thread cement or sealant to tighten joint.

3.07 INSTALLATION OF POLYPROPYLENE AND PVC PIPING

A. Install in strict accordance with the pipe manufacturer’s directions.

3.08 PIPE SUPPORTS

A. Support suspended piping with clevis or trapeze hangers and rods.

B. Space hangers and support for horizontal steel pipes according to the following schedule:

Pipe Size	Maximum Spacing on Centers
1 ¼" and smaller	8'–0"
1 ½" to 3"	10'-0"
4" to 5"	14'-0"

C. Space hangers and supports for horizontal copper tubing according to the following schedule:

Tube Size	Maximum Spacing on Centers
1" and smaller	6'-0"
1 1/2"	7'-0"
2"	8'-0"
2 1/2"	9'-0"
3" and larger	10'-0"

D. Provide sway bracing on hangers longer than 18 inches.

E. Support vertical piping with riser clamps secured to the piping and resting on the structures. Provide at each floor unless otherwise noted.

F. Provide insulation continuous through hangers and rollers. Protect insulation by galvanized steel shields.

G. Arrange pipe supports to prevent excessive deflection, and to avoid excessive bending stress.

H. Support piping from inserts or anchors in concrete slabs. Where practical, provide the inserts under this Section and arrange for the placing per the applicable Sections of Division 03 – Concrete.

I. Hubless Piping:
   1. Provide hangers on the piping at each side of, and within 6 inches of, hubless pipe coupling so the coupling will bear no weight.
   2. Do not provide hangers on couplings.
   3. Provide hangers adequate to maintain alignment and to prevent sagging of the pipe.
   4. Make adequate provision to prevent shearing and twisting of the pipe and the joint.

3.09 SLEEVES AND OPENINGS

A. Provide sleeves in place before concrete is placed.
   1. Set pipe sleeves in place before concrete is placed.
   2. For un-insulated pipe, provide sleeves two pipe sizes larger than the pipe passing through, or provide a minimum of ½-inch clearance between inside and outside of the pipe.
   3. For insulated pipe, provide sleeves of adequate size to accommodate the full thickness of pipe covering, with clearance for packing and caulking.

B. Caulk the space between the sleeve and pipe or pipe covering, using a noncombustible, permanently plastic, waterproof, non-staining compound which leaves a smooth finished appearance, or pack with noncombustible fiberglass packing or fiberglass rope to within ½-incn of both wall faces, and provide the waterproof compound described above.

C. Finish and Escutcheons:
   1. Smooth rough edges around sleeves with plaster or spackling compound.
   2. Provide 1-inch-wide chrome or nickel-plated escutcheons on all pipes exposed to view where passing through walls, floors, partitions, ceiling, and similar locations.
      a. Size the escutcheons to fit pipe and covering.
      b. Hold escutcheons in place with set screw.

3.10 VALVES

A. Provide valves in water, air, and gas systems. Locate and arrange so as to give complete regulation of apparatus, equipment, and fixture.

B. Provide valves in at least the following locations:
   1. In branches and/or headers of water piping serving a group of fixtures.
   2. On both sides of apparatus and equipment.
   3. For shutoff of risers and branch mains.
   4. For flushing and sterilizing the system.
   5. Where shown on Drawings.

C. Locate valves for easy accessibility and maintenance.

3.11 CONCRETE

A. Provide concreted required for the work of this Section in strict accordance with pertinent provisions of Division 03 – Concrete.

3.12 DISINFECTION OF WATER SYSTEMS

1. Disinfect water systems in accordance with these Specifications.
2. Perform disinfection under the Engineer's observation. Notify the ENGINEER at least 48 hours prior to start of the disinfection process.
3. Upon completion of disinfecting, secure and submit the Certificate of Performance required under Article 1.04 of this Section, stating system capacity, disinfectant used, time and rate of disinfectant applied and resultant residuals in ppm at completion.
4. Use disinfectant method approved by the ENGINEER.

3.13 OTHER TESTING AND ADJUSTING

A. Provide personnel and equipment, and arrange for and pay the costs of all required tests and inspections required by governmental agencies having jurisdictions.

B. Where tests show materials or workmanship to be deficient, replace or repair as necessary, and repeat the tests until the specified standards are achieved.

C. Adjust the system to optimum standards of operations.

END OF SECTION

SECTION 23 0000 – VENTILATING, HEATING AND AIR CONDITIONING

PART 1 – GENERAL

1.01 THE REQUIREMENT

A. Provide ventilating, heating, and air conditioning systems, complete and operable, in accordance with the Contract Documents.

1.02 REFERENCE SPECIFICATIONS, CODES, AND STANDARDS

A. All work and materials shall be in full accordance with the latest rules and regulations or publications of the Health and Safety Rules (Air Conditioning Systems), the local Plumbing Code, the local Building Code, and all other local codes. Nothing in the Contract Documents shall be construed to permit work in violation of the above codes, rules, and regulations. In the absence of applicable codes, the installation and workmanship shall follow the standards set by the American Society of Heating, Refrigeration and Air Conditioning.

1.03 SUBMITTALS

A. Shop Drawings: Shop drawings shall be submitted in accordance with Section 01 3300 – Submittal Procedures.

B. Equipment Numbers: Equipment is identified by assigned numbers for reference and location purposes in the Contract Documents. The appropriate equipment numbers shall be included on the Shop Drawings and on other submittals.

1.04 WARRANTY

A. Air conditioners, and all fans and blowers, shall carry the manufacturer's standard warranty, and all such warranties shall be furnished upon final acceptance of the completed systems. All reciprocating refrigerant compressors shall carry a 5-year warranty by the manufacturers.

PART 2 – PRODUCTS

2.01 GENERAL

A. Quality: All mechanisms or parts shall be amply proportioned for the stresses which may occur during operation or for any other stresses which may occur during fabrication and erection. Individual parts that are alike in all units shall be alike in workmanship, design, and materials and shall be of the manufacturer's top line, industrial-commercial grade.

B. Supports: All equipment and appurtenances shall be firmly anchored or connected to supporting members. All supports required for the proper installation of the equipment, but not forming an integral part of the building structure, shall be provided by the heating and ventilating subcontractor, unless otherwise indicated. Equipment shall be supported on restrained spring-type vibration isolators.

C. Noise/Vibration Control: The system shall be free of any objectionable vibrations and noise. Flexible connections shall be provided in all ducts and piping connections to fans, compressors, and any other vibrating equipment.

D. Electric Motors: Electric motors shall be provided in accordance with Division 26 – Electrical.

2.02 DUCTWORK AND MISCELLANEOUS ACCESSORIES

A. Construction: Sheet metal ducts and plenums shall be constructed with airtight joints and seams in accordance with ASHRAE standards and SMACNA Duct Construction Manual. All joints on concealed ducts shall be taped with pressureless tape and adhesive, except

welded or soldered joints. Ductwork materials shall be galvanized steel or aluminum, unless otherwise indicated. Minimum duct gauges required are as follows:

Maximum Dimension of Duct (inches)	Galvanized Steel U.S Standard Gauge	Aluminum B and S Gauge
12 and less	26	24
13 through 30	24	22
31 through 54	22	20
55 through 84	20	18

B. Supports: Supports for horizontal ducts and plenums shall be galvanized steel angles with hanger rods. Supports for vertical ducts shall be band iron strap or angle bracket type. Inlet ducts shall be amply braced to withstand maximum negative pressure.

C. Insulation: The exterior of all ductwork inside of buildings downstream of air conditioning or heating units, other than ducts located in air conditioned spaces, shall be insulated with 2-inch thick flexible glass fiber insulation with a UL-labeled vapor barrier. All joints shall be taped to provide a continuous vapor seal. The insulation shall be attached to the ducts with adhesive applied in a 50 percent coverage. Insulation also shall be secured to the bottom of rectangular ducts over 24 inches wide with mechanical fasteners spaced 12 inches on centers. Ductwork to be internally lined will not require exterior insulation.

D. Lining: The interior of supply and return ducts and plenums within 10-feet distance from fans and all ductwork exposed to the weather shall be lined. Duct lining shall be 1-inch-thick fiberglass fastened to the inside of the ducts. Fastening shall be 100 percent coverage adhesive and mechanical fasteners 12 inches on center in both directions starting approximately 6 inches from ends of insulation. All exposed edges, ends, and rough surfaces shall be painted with adhesive or taped with 3-inch canvas tape dipped in adhesive.

E. Bird Screens: Removable bird screens shall be provided on all outside air intakes and exhaust air discharges to outside air. Screens shall be secured in frames of same metal as screens. Bird screens shall be ½-inch mesh stainless steel by 14-gauge.

F. Flexible Connectors: Flexible duct connections shall be made with banded or flanged 8-oz canvas, or reinforced plastic, or equal at each point where a blower unit is connected to a duct. A minimum clearance of 3 inches between the duct and source of vibration shall be maintained.

G. Diffusers, Grilles, and Registers: All supply air registers and diffusers, return air, and exhaust grilles shall be constructed with smooth corners, flanges, and sponge rubber gaskets and material as noted on the Diffuser Schedule in the Contract Documents. All supply and return air registers and diffusers shall have individually variable blades and volume control dampers as indicated. All ceiling or duct-mounted outlets shall be off-white. Wall-mounted outlets shall be factory prime-coated. Terminals shall be Titus; Metalaire; Krueger; or ENGINEER-approved equal.

H. Acoustic Louvers: Acoustic louvers shall be provided as indicated. Acoustic louvers shall have a minimum noise reduction of 14 dB at octave band No. 3. The CONTRACTOR shall submit certified data from a laboratory substantiating the acoustical performance. Static pressure drop shall not exceed 0.100 inches W.C. at 750 fpm.

I. Acoustic louvers shall be of galvanized formed steel construction with air foil blades. Frame and blade face shall be of 16 and 18-gauge, respectively. Air-side blades shall have perforations, and blades shall be packed with 3.5 lb. density fiber glass or with inert, vermin-and moisture-proof mineral fiber for better acoustical performance. Louvers shall be flush with exterior wall, with mounting frames caulked to provide weather-tight

connections. All protruding inside edges shall be provided with smooth moldings. Acoustic louvers shall be Ruskin, Industrial Acoustics Company; or ENGINEER-approved equal. Coat louvers in accordance with these Specifications.

J. Turning Vanes: Square-turn elbows shall be fitted with shop-fabricated double-blade turning vanes mounted inside rails. Construction shall be of the same material as the duct work and be rigid enough to prevent vibration at high air flow.

K. Air Extractors: An air extractor shall be provided on each take-off from main supply duct adjacent to any diffuser, register, or grille where a splitter is not used. Air extractors shall be Carnes; Tuttle and Bailey or ENGINEER-approved equal. Extractors shall have synchronized steel curved blades, heavy side rails, and screw operator.

2.03 CONTROLS

A. General: All cooling, ventilating, and air conditioning equipment shall be provided with manual and automatic control systems as indicated. The exhaust fan shall be interlocked with the air conditioner to prevent fan operation while the A/C unit is operating. The exhaust fan shall be controlled from a HAND-OFF-AUTOMATIC switch and line-voltage cooling thermostat, wall-mounted. Individual exhaust fans shall have manual switches for single or 2-speed motors as indicated.

B. Thermostats: Room thermostats shall be of the modulating electric type, except where 2-position action is required. Thermostats shall be located in air-conditioned spaces and shall have a range of 40 to 100°F. All thermostats shall have exposed adjustment dials and a thermometer on the front face. Mounting height shall be 5 feet. An insulating back shall be provided where exterior wall mounting is shown. Guards shall be provided for room thermostats installed in areas other than administrative offices or control rooms.

C. Manufacturers: Control system components and thermostats shall be as manufactured by Honeywell; Johnson Controls Company; General Controls; or ENGINEER-approved equal.

2.04 PIPING

A. Piping in air conditioning systems shall be galvanized steel in accordance with these Specifications. Equipment drains shall be of Type "K" copper tube.

2.05 FANS

A. General: Location, type, capacity, and motor horsepower shall be as indicated. Fans shall be complete with motors, variable motor bases, variable drives, safety cages, belt guards, flexible connections to supply and/or suction ducts, vibration isolators, and necessary accessories. All fans shall be suitable for continuous operation.

B. Performance: Fans shall be guaranteed to deliver the quantities of standard air against the respective static pressure without deviating by more than 5 percent. Every fan wheel, regardless of size, shall be statically and dynamically balanced, and shall be free from objectionable vibration or noises.

2.06 VENTILATION FAN

A. Ventilation fan shall be remote mount, energy conserving type, with no less than 340 cfm as certified by the Home Ventilating Institute (HVI) at 0.2” static pressure in inches water gauge and no more than 1.7 sone as rated by manufacturer at 0.2” static pressure. Power consumption shall be no greater than 100 watts and energy efficiency rating shall be no less than 3.5 cfm/watt. Housing shall be insulated to reduce condensation. Duct diameter shall be no less than 6”. Fan shall be UL listed when used with GFCI branch circuit wiring. Brackets shall be provided for joist, truss, or suspension installations.

2.07 CENTRIFUGAL EXHAUST FAN

A. Exhaust fan shall be direct mounted, direct driven, propeller type. Fan blades shall be fabricated of aluminum. Propellers shall be statically and dynamically balanced in accordance with ACMA standard 204. Motors shall be continuous duty ball bearing design, permanently lubricated, heavy duty type, matched to the fan load and furnished at the specified RPM, voltage, phase, and enclosure. Motor drive frame assemblies and fan panels shall be epoxy painted steel. Drive frame assemblies shall be welded wire or formed channels and fan panels shall have pre-punched mounting holes, formed flanges, and a deep formed inlet venturi. Motor shall meet the requirements of Division 26. Fan shall be certified for air and sound performance in accordance with ACMA.

B. Performance: Fans shall be guaranteed to deliver the quantities of standard air against the respective static pressure without deviating by more than 5 percent. Every fan wheel, regardless of size, shall be statically and dynamically balanced, and shall be free from objectionable vibration or noises. Fan performances indicated in the schedule shall be minimum.

C. Isolation Damper: The dampers shall be positive seal, butterfly isolation type. The blade shall be constructed of aluminum or stainless steel depending on requirements. Blade seal shall occur when the gasket seats against the inside of the housing wall. The damper shall be all weld design. Manual actuator shall be 1/4" turn worm gear with handwheel.

D. Fan manufacturers shall be Dayton, Greenheck, Penn Ventilation or ENGINEER-approved equal. Damper manufacturers shall be Arrow, Ruskin or ENGINEER-approved equal.

2.08 AIR CONDITIONER

A. Air conditioning unit shall be of the packaged, rooftop design as indicated. All air conditioning units shall have direct expansion coils and, where indicated, gas or electric heaters; filter compartments with access door and industrial type disposable filters mounted on steel frames; mixing boxes with return air, fresh air and relief dampers; mounting frame or curb and restrained spring-type vibration isolators. All units shall be controlled from cooling room-thermostats. Unless otherwise indicated, motorized dampers shall be controlled from outside air thermostats. All outdoor air conditioners shall have heavy galvanized or prime-coated steel cabinets of weather resistant design. All drain pans shall have galvanized steel or copper drain lines connected to the nearest floor sink or drain in accordance with the applicable Plumbing Code.

B. Air conditioners shall be as manufactured by Trane, Carrier, York, Lennox, or ENGINEER-approved equal.

2.09 FILTERS

A. All air handling units and air conditioners shall be provided with filter compartments. The filters shall be of the disposable, high efficiency, industrial type, set into galvanized mounting frames with fastening clips for easy removal.

PART 3 – EXECUTION

3.01 GENERAL

A. Roughing-In: It shall be ascertained that all inserts, chassis, shafts, and openings are correctly located; otherwise all new openings shall be cut at no additional expense.

B. Checking: Test and make tight all work, furnish all equipment necessary to carry out the tests and thoroughly clean the system before startup.

C. System Balancing: After completion of all required work, the system, as a whole, shall be checked and balanced. System balancing shall include the following:

1. Adjusting fans, dampers, diffusers, registers, valves, and other devices so that the quantities of air, water, and steam called for on the Drawings are supplied, returned, or exhausted.
2. Measuring and recording at least once the water and air temperatures delivered through each coil on full heating and full cooling: making all necessary adjustments to obtain the required conditions.
3. Measuring and recording current on each fan and motor, and checking for proper operation of all equipment.
4. Adjusting any variable blade registers to the correct setting to obtain the design conditions.

END OF SECTION

SECTION 26 0126 – MAINTENANCE TESTING OF ELECTRICAL SYSTEMS

PART 1 – GENERAL

1.01 SCOPE OF WORK

A. The CONTRACTOR shall provide testing as specified herein.

1.02 REFERENCES

A. The following is a list of standards which may be referenced in this section:

1. American National Standards Institute (ANSI):

450	Maintenance, Testing, and Replacement of Large lead Storage Batteries for Generator Stations and Substations.
C2	National Electric Safety Code.
C37.20.1	Metal-Enclosed Low Voltage Power Circuit Breaker Switchgear.
C37.20.2	Metal-Clad and Station-Type Cubicle Switchgear.
C37.20.3	Metal-Enclosed Interrupter Switchgear.
C62.33	Test Specifications for Varistor Surge Protective Devices.

2. American Society for Testing and Materials (ASTM):

D665	Rust Preventing Characteristics of Inhibited Mineral Oil in the Presence of Water
D877	Dielectric Breakdown Voltage of Insulating Liquids Using Disk Electrodes
D923	Sampling Electrical Insulating Liquids
D924	A-Class Characteristics and Relative Permittivity (Dielectric Constant) of Electrical Insulating Liquids
D971	Interfacial Tension of 0.1 Against Water by the Ring Method
D974	Acid and Base Number by Color-indicator Titration
D1298	Density, Relative Density (Specific Gravity), or API Gravity of Crude Petroleum and Liquid Petroleum Products by Hydrometer Method
D1500	ASTM Color of Petroleum Products
D1524	Visual Examination of Used Electrical Insulating Oils of Petroleum Origin in the Field
D1533	Water in Insulating Liquids
D1816	Dielectric Breakdown Voltage on Insulating Oils of Petroleum Origin Using VDE Electrodes
D2285	Interfacial Tension of Electrical Insulating Oils of Petroleum Origin Against Water by the Drop-Weight Method

3. Institute of Electrical and Electronics Engineers (IEEE):

43	Testing Insulating Resistance of Rotating Machinery
48	Test Procedures and Requirements for High-Voltage Alternating-Current Cable Terminators
81	Measuring Earth Resistivity, Ground Impedance, and Earth Surface Potentials of a Ground System
95	Insulation Testing of Large AC Rotating Machinery with High Direct Voltage
118	Test Code for Resistance Measurement
400	Making High-Direct-Voltage Tests on Power Cable Systems in the Field

4. National Electrical Manufacturers Association (NEMA):

AB 4 Inspection and Preventive Maintenance of Molded Case Circuit Breakers Used in Commercial and Industrial Applications
PB 2 Deadfront Distribution Switchboards
WC 7 Cross-Linked-Thermosetting-Polyethylene-Insulated Wire and Cable for the Transmission and Distribution of Electrical Energy.
WC 8 Ethylene-Propylene-Rubber-insulated Wire and Cable for the Transmission and Distribution of Electrical Energy.

5. International Electrical Testing Association (NETA) 1999: Acceptance Testing Specifications (ATS) for Electrical Power Distribution Equipment and Systems.
6. National Fire Protection Association (NFPA):

70 National Electrical Code (NEC).
70E Standard for Electrical Safety Requirements for Employee Workplaces.

1.03 SUBMITTALS

A. Products shall be submitted for review in accordance with these Specifications and the Contract Documents.

B. Administrative Submittals: Submit 30 days prior to performing inspections or tests:
1. Schedule for performing inspection and tests
   a. Include notification dates for special inspections.
2. List of references to be used for each test
3. Sample copy of equipment and materials inspection form(s)
4. Sample copy of individual device test form
5. Sample copy of individual system test form

C. Quality Control Submittals: Submit within 14 days after completion of test:
1. Test or inspection reports and certificates for each electrical item tested

D. Contract Closeout Submittals:
1. In accordance with Operation & Maintenance requirements specified elsewhere
2. After test of inspection reports and certificates have been reviewed by ENGINEER and returned, insert a copy of each in operation and maintenance manual.

1.04 QUALITY ASSURANCE

A. Testing Firm Qualifications:
1. Independent 3rd party organization functioning as an unbiased testing authority.
2. Professionally independent of manufacturers, suppliers, and installers, of electrical equipment and systems being tested.
3. Employer of engineers and technicians regularly engaged in testing and inspecting of electrical equipment, installations, and systems.
4. Supervising engineer accredited as Certified Electrical Test Technologist by National Institute for Certification of Engineering Technologists (NICET), or International Electrical Testing Association and having a minimum of 5 years testing experience on similar projects.
5. Technicians certified by NICET or NETA.
6. Assistants and apprentices assigned to project at ratio not to exceed two certified to one non-certified assistant or apprentice.
7. Registered Professional Engineer to provide comprehensive project report outlining services performed, results of such services, recommendations, actions taken, and opinions.

8. In compliance with OSHA Title 29, Part 1910.7 criteria for accreditation of testing laboratories.

B. Test equipment shall have an operating accuracy equal to, or greater than, requirements established by NETA ATS. Test instrument calibration shall be in accordance with NETA ATS.

1.05 SEQUENCING AND SCHEDULING

A. Perform inspection and electrical tests after equipment has been installed and certified by equipment manufacturer's representative.

B. Perform tests with apparatus de-energized whenever feasible.

C. Inspection and electrical tests on energized equipment are to be:
   1. Scheduled with OWNER and ENGINEER prior to de-energization.
   2. Minimized to avoid extended period of interruption to the operating equipment.

D. Notify OWNER and ENGINEER at least 72 hours prior to performing tests on energized electrical equipment.

PART 2 – PRODUCTS (NOT USED)

PART 3 – EXECUTION

3.01 GENERAL

A. Tests specified in this section are to be performed in accordance with the requirements of manufacturer's minimum recommendations, as identified herein, and as detailed in specific equipment specifications.

B. Tests and inspection shall establish that:
   1. Electrical equipment is operational within industry and manufacturer's tolerances.
   2. Installation operates as designed and intended by the equipment manufacturer.
   3. Equipment is suitable for energization.
   4. Installation conforms to requirements of Contract Documents and NFPA 70, NFPA 70E, and ANSI C2.

C. Perform inspection and testing in accordance with NETA ATS, industry standards, and manufacturer's recommendations.

D. Adjust mechanisms and moving parts for free mechanical movement.

E. Adjust adjustable relays and sensors to correspond to operating conditions, or as recommended by manufacturer.

F. Verify nameplate data for conformance to Contract Documents.

G. Realign and shim equipment not properly aligned and correct out of alignment, plumb, or level condition.

H. Properly anchor electrical equipment found to be inadequately anchored.

I. Tighten accessible bolted connections, including wiring connections, with calibrated torque wrench to manufacturer's recommendations, or as otherwise specified.

J. Clean contaminated surfaces with cleaning solvents as recommended by manufacturer.

K. Provide proper lubrication of applicable moving parts.

L. Inform OWNER of working clearances not in accordance with NFPA 70.

M. Investigate and repair or replace:
   1. Electrical items that fail tests.

2. Active components not operating in accordance with manufacturer's instructions.
3. Damaged electrical equipment.

3.02 ELECTRICAL ENCLOSURES

A. Remove foreign material and moisture from enclosure interior.

B. Vacuum and wipe clean enclosure interior.

C. Remove corrosion found on metal surfaces.

D. Repair or replace, as determined by OWNER, door and panel sections having dented surfaces.

E. Repair or replace, as determined by OWNER, poor fitting doors and panel sections.

F. Repair or replace improperly operating latching, locking, or interlocking devices.

G. Replace missing or damaged hardware.

H. Finish:
1. Provide matching paint and touch up scratches and mars.
2. If required due to extensive damage, as determined by OWNER, refinish the entire assembly.

I. Replace fuses and circuit breakers that do not conform to size and type required by the Contract Documents.

J. Grout, caulk, or seal around the base of enclosures to prevent the entrance of moisture, dust, and rodents.

3.03 DRY TYPE TRANSFORMERS

A. Visual and Mechanical inspection:
1. Physical and insulator damage
2. Proper winding connections
3. Bolt torque level in accordance with most recent publication of NETA ATS, unless otherwise specified by manufacturer.
4. Defective wiring
5. Removal of shipping brackets, fixtures, or bracing
6. Free and properly installed resilient mounts
7. Cleanliness and improper blockage of ventilation passages
8. Verify that tap-changer is set at correct ratio for rated output voltage under normal operating conditions.
9. Verify proper secondary voltage phase-to-phase and phase-to-ground after energization and prior to loading.

B. Electrical Tests:
1. Insulation Resistance Tests:
a. Applied megohmmeter in accordance with most recent publication of NETA ATS, for each:
1) Winding-to-winding
2) Winding-to-ground
b. 10-minute test duration with resistances tabulated at 30 seconds, 1 minute, and 10 minutes.
c. Results temperature corrected in accordance with most recent publication of NETA ATS.
d. Temperature corrected insulation resistance values equal to, or greater than, ohmic values established by manufacturer.

e. Insulation resistance test results to compare within 1 percent of adjacent windings.

2. Perform tests and adjustments for fans, controls, and alarm functions as suggested by manufacturer.

3.04 LOW VOLTAGE CABLES, 600 VOLTS MAXIMUM

A. Visual and Mechanical Inspection:

1. Inspect each individual exposed power cable No. 4 and larger for:
   a. Physical damage.
   b. Proper connections in accordance with Contract Drawings and approved submittals.
   c. Cable bends not in conformance with manufacturer's minimum allowable bending radius where applicable.
   d. Color coding conformance with NFPA 70 or specifications.
   e. Proper circuit identification.
2. Mechanical Connections For:
   a. Proper lug type for conductor material.
   b. Proper lug installation.
   c. Bolt torque level in accordance with most recent publication of NETA ATS, unless otherwise specified by manufacturer.
3. Shielded Instrumentation Cables (IC) for:
   a. Proper shield grounding.
   b. Proper terminations.
   c. Proper circuit identification.
4. Control Cables For:
   a. Proper termination.
   b. Proper circuit identification.
5. Cables Terminated Through Window Type CTs: Verify that neutrals and grounds are terminated for correct operation of protective devices.

B. Electrical Tests:

1. Insulation Resistance Tests:
   a. Applied megohmmeter in accordance with most recent publication of NETA ATS.
   b. Phase-to-phase and phase-to-ground for 1 minute on each pole.
   c. Insulation resistance values equal to, or greater than ohmic values established by manufacturer or listed in the most recent publication of NETA ATS.
2. Contact Resistance Tests:
   a. Contact resistance in microhms across each switch blade and fuse holder, 30 amps and larger.
   b. Investigate deviation of 50 percent or more form adjacent poles or similar switches.

3.05 MOLDED CASE CIRCUIT BREAKERS

A. General: Inspection and testing limited to circuit breakers rated 200 amperes and larger.

B. Visual and Mechanical Inspection:

1. Proper mounting
2. Proper conductor size
3. Feeder designation according to nameplate and one-line diagram
4. Cracked casings
5. Connection bolt torque level in accordance with the most recent publication of NETA ATS.

6. Operate frame size and trip setting with circuit breaker schedules or one-line diagram.
7. Compare frame size and trip setting with circuit breaker schedules or one-line diagram.
8. Verify that terminals are suitable for 75 degrees C rated insulated conductors.

C. Electrical Tests:
1. Insulation Resistance Tests:
   a. Utilize 1,000-volt megohmmeter for 480 and 600-volt circuit breakers.
   b. Pole-to-pole and pole-to-ground with breaker contacts opened for 1 minute
   c. Pole-to-pole and pole-to-ground with breaker contacts closed for 1 minute
   d. Test valves to comply with the most recent publication of NETA ATS.
2. Contact Resistance Tests:
   a. Contact resistance in microhms across each pole
   b. Investigate deviation of 50 percent or more from adjacent poles and similar breakers.
3. Primary Current Injection Test to Verify:
   a. Long-time minimum pickup and delay
   b. Short-time pickup and delay
   c. Ground fault pickup and delay
   d. Instantaneous pickup by run-up or pulse method
   e. Trip characteristics of adjustable trip breakers shall be within manufacturer's published time-current characteristic tolerance band, including adjustment factors
   f. Trip times shall be within limits established by the most recent publication of NEMA AB 4.
   g. Instantaneous pickup value shall be within values established by the most recent publication of NEMA AB 4.

3.06 INSTRUMENT TRANSFORMERS

A. Visual and Mechanical Inspection:
1. Visually Check Current, Potential, and Control Transformers For:
   a. Cracked insulation
   b. Broken leads or defective wiring
   c. Proper connections
   d. Adequate clearances between primary and secondary circuit wiring
2. Verify Mechanically that:
   a. Grounding and shorting connections have good contact.
   b. Withdrawal mechanism and grounding operation, when applicable, operate properly.
3. Insulation resistance measurement on instrument transformer shall not be less than that shown in the most recent publication of NETA ATS.

3.07 METERING

A. Visual and Mechanical Inspection:
1. Verify meter connections in accordance with appropriate diagrams.
2. Verify meter multipliers.
3. Verify that meter types and scales conform to Contract Documents.
4. Check calibration of meters at cardinal points.
5. Check calibration of electrical transducers.

3.08 GROUNDING SYSTEMS

A. Visual and Mechanical Inspection:
   1. Equipment and circuit grounds in motor control center and panelboard assemblies for proper connection and tightness.
   2. Ground bus connections in motor control center and panelboard assemblies for proper termination and tightness.
   3. Effective transformer core and equipment grounding.
   4. Accessible connections to grounding electrodes for proper fit and tightness.
   5. Accessible exothermic-weld grounding connections to verify that molds were fully filled and proper bonding was obtained.

3.09 AC INDUCTION MOTORS

A. General: Inspection and testing limited to motors rated 10 hp and larger.
B. Visual and Mechanical Inspection:
   1. Proper electrical and grounding connections.
   2. Shaft alignment.
   3. Blockage of ventilating air passageways.
   4. Operate Motor and Check for:
      a. Excessive mechanical and electrical noise.
      b. Overheating.
      c. Correct rotation.
      d. Check vibration detectors, resistance temperature detectors, or motor inherent protectors for function ability and proper operation.
      e. Excessive vibration.
   5. Check operation of space heaters.

C. Electrical Tests:
   1. Insulation Resistance Tests:
      a. In accordance with IEEE 43:
         1) Motors above 200 hp for 10-minute duration with resistances tabulated at 30 seconds, 1 minute, and 10 minutes.
         2) Motors 200 hp and less for 1-minute duration with resistances tabulated at 30 and 60 seconds.
   2. Insulation resistance values equal to, or greater than, ohmic values established by manufacturers.
   3. Calculate polarization index ratios for motors above 200 hp. Investigate index ratios less than 1.5 for Class A insulation and 2.0 for Class B insulation.
   4. Insulation resistance test on insulated bearings in accordance with manufacturer's instructions.
   5. Measure running current and voltage, and evaluate relative to load conditions and nameplate full-load amperes.
   6. Verify proper operation of motor moisture and winding temperature protection, and other ancillary devices.

3.10 MOTOR CONTROL CENTERS AND MOTOR CONTROLLERS

A. Visual and Mechanical Inspection:
   1. Proper barrier and shutter installation and operation.
   2. Proper operation of indicating and monitoring devices.
   3. Proper overload protection for each motor.
   4. Improper blockage of air-cooling passages.
   5. Proper operation of draw out elements.
   6. Integrity and contamination of insulation system.

7. Check door and device interlocking system by:
   a. Closure attempt of device when door is in OFF or OPEN position.
   b. Opening attempt of door when device is in ON or CLOSED position.
8. Check nameplates for proper identification of:
   a. Equipment title and tag number with latest Contract Drawings and approved submittals
   b. Pushbuttons
   c. Control switches
   d. Pilot lights
   e. Control relays
   f. Circuit breakers
   g. Indicating meters
9. Verify that fuse and circuit breaker sizes and types conform to Contract Documents.
10. Verify that current and potential transformer ratios conform to Contract Documents.
11. Check bus connections for high resistance by low resistance ohmmeter and calibrated torque wrench applied to bolted joints:
    a. Ohmic value to be zero
    b. Bolt torque level in accordance with the most recent publication of NETA ATS, unless otherwise specified by manufacturer.
12. Check operation and sequencing of electrical and mechanical interlock systems by:
    a. Closure attempt for locked open devices.
    b. Opening attempt for locked closed devices.
13. Verify performance of each control device and feature famished as part of the motor control center or motor controller.
14. Control Wiring:
    a. Compare wiring to local and remote control, and protective devices with elementary diagrams.
    b. Check for proper conductor lacing and bundling.
    c. Check for proper conductor identification.
    d. Check for proper conductor lugs and connections.
15. Exercise active components.
16. Inspect contactors for:
    a. Correct mechanical operations.
    b. Correct contact gap, wipe, alignment, and pressure.
    c. Correct torque of all connections.
16. Compare overload rating with full-load current for proper size.
17. Compare fuse, motor protector, and circuit breaker with motor characteristics for proper size.
18. Perform phasing check on double-ended motor control centers to ensure proper bus phasing from each source.

B. Electrical Tests:
   1. Insulation Resistance Tests:
      a. Applied megohmmeter in accordance with the most recent publication of NETA ATS.
      b. Bus section phase-to-phase and phase-to-ground for 1 minute on each phase.
      c. Contactor phase-to-ground and across open contacts for 1 minute on each phase.
      d. Starter section phase-to-phase and phase-to-ground on each phase with starter contacts closed and protective devices open.
      e. Test values to comply with the most recent publication of NETA ATS.

2. Overpotential Tests:
   a. Maximum applied voltage in accordance with manufacturer's published values. If not available, in accordance with the most recent publication of NETA ATS.
   b. Phase-to-phase and phase-to-ground for 1 minute for each phase of each bus section.
   c. Test results evaluated on pass/fail basis.
3. Current Injection Through Overload Unit at 300 Percent of Motor Full-Load Current and Monitor Trip Time:
   a. Trip time in accordance with manufacturer's published data.
   b. Investigate values in excess of 120 seconds.
4. Control Wiring Tests:
   a. Apply secondary voltage to control power and potential circuits.
   b. Check voltage levels at each point on terminal boards and each device terminal.
   c. Insulation resistance test at 1,000 volts on control wiring except that connected to solid state components.
      1) Insulation resistance to be 1 megohm minimum.
5. Operational test by initiating control devices to affect proper operation.

3.11 LOW VOLTAGE SURGE ARRESTORS

A. Visual and Mechanical Inspection:
   1. Adequate clearances between arrestors and enclosures.
   2. Ground connections to ground bus.

B. Electrical Tests:
   1. Varistor Type Arresters:
      a. Clamping voltage test.
      b. Rated RMS voltage test.
      c. Rated voltage test.
      d. Varistor arrester test values in accordance with ANSI C62.33, Sections 4.4 and 4.7.

END OF SECTION

SECTION 26 0500 – COMMON WORK RESULTS FOR ELECTRICAL

PART 1 – GENERAL

1.01 SCOPE OF WORK

A. It is the intent of this part of the Contract Documents to cover the work and materials necessary for erecting a complete electrical system, tested and ready for continuous use. The system shall be constructed in accordance with the Contract Documents, and Federal, State, and Local codes and regulations.

1.02 RELATED WORK

A. The CONTRACTOR shall coordinate the work with other trades, and furnish and install the equipment in accordance with the manufacturers' requirements.

1.03 GENERAL PROVISIONS

A. Minimum sizes of equipment, and electrical devices, are indicated but it is not intended to show every offset and fitting, nor every structural or mechanical difficulty that will be encountered during the installation of the work.

B. Work indicated on the Plans is approximately to scale, but actual dimensions and detailed Plans should be followed as closely as field conditions permit. Field verification of scale dimensions on Plans is governed by field conditions. Installation of systems and equipment is subject to clarification as indicated in reviewed shop drawings and field coordination.

C. Discrepancies indicated on different Plans, between Plans and actual field conditions, or between Plans and Contract Documents shall be promptly brought to the attention of the ENGINEER for clarification, prior to purchasing and installing equipment.

D. The alignment of equipment and conduit shall be adjusted to accommodate architectural changes, or to avoid work of other trades, without extra expense to the OWNER.

E. The CONTRACTOR shall furnish and install the parts and pieces necessary to the installation of equipment, in accordance with the best practice of the trade, and in conformance with the requirements of these Contract Documents.

F. Items not specifically mentioned in these Contract Documents, or noted on the Plans, or indicated on reviewed shop drawings, but which are obviously necessary to make a complete working installation, shall be deemed to be included herein.

G. The CONTRACTOR shall lay out and install electrical work prior to placing floors and walls. Furnish and install sleeves and openings through floors and walls, required for installation of conduits. Sleeves shall be rigidly supported and suitably packed, or sealed, to prevent ingress of wet concrete. Spacers shall be installed in order to prevent conduit movement. Dimensions indicated for electrical equipment and their installation are restrictive dimensions.

H. The CONTRACTOR shall furnish and install inserts and hangers required to support conduits and other electrical equipment. If the inserts, hangers, sleeves, or other mounting hardware are improperly placed, or installed, the CONTRACTOR shall do necessary work, at their own expense, to rectify the errors.

I. Electrical equipment shall be capable of operating successfully at full-rated load, without failure, at an ambient air temperature of 60°C, and specifically rated for the altitude indicated on the Plans. Electrical equipment not rated for operation at that temperature shall be provided with air conditioning to meet the manufacturers' operating temperature.

J. If any contradictions, contrasts, non-homogeneity, or inconsistency appears, the stricter criteria noted and the collective requirements in any and all of the project documents shall apply.

K. The CONTRACTOR shall perform necessary saw cutting, core drilling, excavating, removal, shoring, backfilling, and other work required for the proper installation of conduits, whether inside, or outside of the buildings and structures. The CONTRACTOR shall repair and patch where demolition has taken place in a manner to match existing original structure.

1.04 REGULATIONS, CODES, AND STANDARDS

A. Electrical work, including connection to electrical equipment integral with mechanical equipment, shall be performed in accordance with the latest published regulations, codes, and standards, of the following:
   1. National Electrical Code (NEC)
   2. State and local codes
   3. Institute of Electrical and Electronic Engineers (IEEE)
   4. American National Standards Institute (ANSI)
   5. American Society for Testing and Materials (ASTM)
   6. Insulated Cable Engineers Association (ICEA)
   7. National Electrical Manufacturers Association (NEMA) Standards
   8. Federal Occupational Safety and Health Act (OSHA)
   9. National Fire Protection Association (NFPA)
   10. National Electrical Testing Association (NETA)

B. When applicable, the material used in the performance of the electrical work shall be listed by the Underwriters' Laboratories, Inc. (UL) for the class of service for which they are intended.

1.05 SUBMITTALS

A. It is the obligation of the CONTRACTOR to organize their work, so that a complete electrical, instrumentation, and control system for the facility will be provided, and will be supported by accurate shop and record drawings, and O&M manuals.

B. The CONTRACTOR shall submit detailed shop drawings and data prepared and organized by the suppliers. The quantity of submittal sets required shall be as specified in the Contract Documents.

C. The submittals shall be neatly grouped and organized by specification section number, and sub-section. Related information shall be highlighted, and the specific product shall be marked. All submittals shall be complete, and presented in one package. Incomplete submittals will be returned without review. If a portion of the project requires a fast track schedule, that portion may only be submitted earlier under a separate cover letter. The following shall be submitted to the ENGINEER and returned reviewed to the CONTRACTOR before fabrication is started.
   1. A complete list of the equipment and materials, including the manufacturer's name, product specification, descriptive data, technical literature, performance charts, catalog cuts, installation instructions, and spare part recommendations for each different item of the equipment specified. The above shall clearly show all the specified requirements as described in the Specifications including but not limited to specific UL and NEMA rating, technical capabilities, test result verifications, and acceptance letters.
   2. Drawings containing complete point to point wiring and schematic diagrams, control diagrams, and any other details required to demonstrate that the system has been coordinated and will operate as intended. Drawings for each panel, cabinet, or enclosure shall show a complete Bill of Materials, wire numbers for internal panel and field wiring, terminal block numbers, proposed internal layout with assembly details, anchoring, support, and appurtenances of equipment, and equipment relationship to other parts of the work including clearances for maintenance and operations.
   3. Any exceptions to these specifications, with the reasons for requesting such exceptions, with calculations and drawings for redesign of related components, including detail drawings showing internal and assembly details, with installation instructions. Proposed layout showing any modifications or exceptions to related work made necessary by this work, with

calculations and drawings showing such modifications or exceptions.

D. Upon Project acceptance, the CONTRACTOR shall submit "Record Drawings" of the electrical, control, and instrumentation, along with step-by-step procedure manuals for the installation, operation start-up, and maintenance of the equipment. Each set shall include installation, operating, troubleshooting, and maintenance and overhaul instructions in complete detail. It shall also include possible breakdowns and repairs, and troubleshooting guides, as well as simplified wiring and control diagrams of the system installed. This shall provide the OWNER with comprehensive information on all systems and components to enable operation, service, maintenance and repair. Exploded or other detailed views of all equipment, devices, assemblies, and accessory components shall be included, together with complete parts lists and ordering instructions.

1. Record Drawings:
   a. The CONTRACTOR shall maintain a marked up set of Contract Document Plans showing actual installed circuit numbers, conduit sizes, cable tray routing, number of conductors, conductor sizes (larger than #12 AWG), and all other deviations from the design Plans.
   b. Underground conduit and concealed items shall be dimensioned on the Plans from permanent, visible, building features.
   c. The CONTRACTOR shall provide actual transformer kVA, disconnect switch rating, starter, and overload heater size (if applicable) along with all other protective equipment for all 480, 240, 208 and 120V devices as part of the one-line record drawings.
   d. The CONTRACTOR shall revise all conductor identification and panel schedules to indicate as-built conditions.

PART 2 – PRODUCTS

2.01 GENERAL MATERIALS AND METHODS

A. Materials, equipment, and parts comprising any unit, or part thereof, specified or indicated on the Plans, shall be new and unused, of current manufacture, and of highest grade consistent with the state of the art. Damaged materials, equipment, and parts, are not considered to be new and unused, and will not be accepted.

B. Field verification of scale dimensions on Plans is directed, since actual locations, distances, and levels will be governed by actual field conditions. The CONTRACTOR shall also review architectural, structural, yard, mechanical, and other Plans, and the accepted electrical and mechanical shop drawings, and shall adjust their work to conform to the conditions indicated therein.

C. The fabricator of major components, such as distribution panelboards, switchgear/switchboards, and motor control centers, shall also be the manufacturer of the major devices therein.

D. Refer to various Division sections for individual equipment manufacturers. Indicated manufacturers are subject to strict compliance with the specifications and complete project documents. The reference to a particular manufacturer does not relieve the CONTRACTOR from conforming to the specified requirements.

2.02 NAMEPLATES

A. Where indicated elsewhere in these specifications, or on the Plans, the CONTRACTOR shall furnish and install nameplates, which shall be white laminate with black letters. The nameplates shall be fastened to the various devices with round head stainless steel screws. Each disconnecting means for service, feeder, branch, or equipment conductors, shall have nameplates indicating its purpose.

2.03 EQUIPMENT ASSEMBLIES

A. Equipment assemblies, such as Service Entrance Sections, Switchgear, Switchboards, Control and Distribution Panels, and other custom fabricated electrical enclosures shall bear a UL label as a complete assembly. The UL label on the individual components making up the assembly will not be considered sufficient to meet the present requirement. Whenever a generic UL label does not apply for the assembly, a serialized UL label shall be affixed to the assembly, and the serial number shall be submitted with the assembly record shop drawings.

B. Custom fabricated electrical control panels, and enclosures, shall bear a UL label affixed by a local UL inspector.

PART 3 – EXECUTION

3.01 UTILITY SERVICE AND EQUIPMENT

A. Electrical Utility: The CONTRACTOR shall be responsible for contacting and coordinating the electrical utility work with the electrical utility company:

Arizona Public Service (APS)
M.S. 4714
6672 Corsair Avenue,
Prescott, AZ 86301
(928) 443-6794
www.aps.com

B. The CONTRACTOR shall be responsible for furnishing and installing equipment and material required to bring electrical power service to the service location in conformance with the electrical utility requirements. The CONTRACTOR may have to provide the following for the electrical utility company's primary (from utility power line to the utility transformer) and secondary (from utility transformer to the service) electrical lines in accordance with the electrical utility company's specifications and requirements:

1. Conduits (verify quantity and sizes).
2. Trenching, backfill, and compacting (verify trench size(s), backfill material, and compaction percentage requirements).
3. Concrete pad(s) (for pad mounted transformer(s)).
4. Cable protection along the vertical drop at the utility company's pole (if pole mounted transformer(s).
5. Other items required by the power utility company's specifications.

B. The CONTRACTOR shall also submit copies of service entrance shop Drawings to the utility, per utility submittal requirements, prior to submittal to the ENGINEER. The CONTRACTOR shall obtain written approval from the power utility company that the service entrance equipment is acceptable prior to releasing the order to the supplier for fabrication. A copy of the approval letter from the utility shall be transmitted to the ENGINEER along with the submittal.

C. The CONTRACTOR shall provide trenching, conduit, and backfill for the Telephone Company's communication lines from their main distribution panel to the connection box at this project site, as required by the Telephone Company.

D. Electrical equipment such as switchboard, switchgear, panelboards, industrial control panels, and meter socket shall have an arc flash label in accordance with NEC 110.16(a).

3.02 INSTALLATION OF ELECTRICAL EQUIPMENT

A. Coordinate the installation of electrical equipment with other trades.

1. Arrange for the building-in of equipment during structure construction.
2. Where equipment cannot be built-in during construction, arrange for sleeves, box-outs, and other openings, as required to allow installation of equipment after structure construction is

complete.

B. Verify that equipment will fit support layouts indicated.

C. Equipment Dimensions and Clearances:
   1. Do not use equipment that exceeds the indicated dimensions except as approved in writing by the ENGINEER.
   2. Do not use equipment or arrangements of equipment that reduce required clearances or exceed the space allocation.

D. Install equipment in accordance with the manufacturer's instructions.

E. Equipment Access:
   1. Install equipment so it is readily accessible for operation and maintenance.
   2. Equipment shall not be blocked or concealed.
   3. Do not install electrical equipment such that it interferes with normal maintenance requirements of other equipment.

F. Equipment shall be installed plumb, square and true with the building construction, and shall be securely fastened.

G. Outdoor wall-mounted equipment, and indoor equipment mounted on earth, or water bearing walls, shall be provided with corrosion-resistant spacers to maintain 1/4-inch separation between the equipment and the wall.

H. Screen or seal all openings into outdoor equipment to prevent the entrance of rodents and insects.

I. Equipment fabricated from aluminum shall not be imbedded in earth or concrete.

J. Provide all necessary anchoring devices and supports:
   1. Use supports as detailed on the Plans and as specified.
   2. Supports and anchoring devices shall be rated and sized based on dimensions and weights verified from approved equipment submittals.
   3. Hardware shall be stainless steel.
   4. Do not cut, or weld to, building structural members.
   5. Do not mount safety switches and external equipment to other equipment enclosures, unless enclosure mounting surface is properly braced to accept mounting of external equipment.

K. CONTRACTOR shall verify exact rough-in location and dimensions for connection to electrical items furnished by others.
   1. Shop drawings shall be obtained from those furnishing the equipment.
   2. Proceeding without proper information may require the CONTRACTOR to remove and replace work that does not meet the conditions imposed by the equipment supplied.
   3. Provide sleeves wherever openings are required through new concrete or masonry members. Place sleeves accurately and coordinate locations with the ENGINEER.
   4. Should any cutting and patching be required on account of failure of the CONTRACTOR to coordinate penetrations, such cutting and patching shall be done at the expense of the CONTRACTOR.
      a. The CONTRACTOR shall not endanger the stability of any structural member by cutting, digging, chasing, or drilling and shall not, at any time, cut or alter the work without the ENGINEER's written consent.
         1) Provide additional reinforcing if required.
         2) Cutting shall be done neatly using proper tools and methods.
      b. Subsequent patching to restore walls, ceilings, or floors to their original condition shall be done by the CONTRACTOR.

L. Provide concrete foundations or pads required for electrical equipment as indicated or specified.
   1. Floor-mounted equipment shall be mounted on a 4-inch concrete housekeeping pad. Pad

shall be poured on top of the finished floor or slab.

3.03 TEMPORARY POWER

A. The CONTRACTOR shall furnish, install, and maintain, temporary power and lighting systems needed for construction. This temporary system shall include weatherproof panel(s) for the CONTRACTOR's main breakers and distribution system. Ground fault interrupting equipment shall be installed. Connections shall be watertight, with wiring done with Type SO portable cable. After construction is completed, the CONTRACTOR shall remove temporary power equipment and devices.

3.04 CUTTING AND REPAIRING

A. Where it becomes necessary to cut into existing work for the purpose of making electrical installations, core drills shall be used for making circular holes. Other demolition methods for cutting or removing shall be reviewed by the ENGINEER prior to starting the work.

B. The CONTRACTOR shall repair damage caused by construction, or demolition work, and restore damaged areas to original condition.

3.05 CORROSION PROTECTION

A. Wherever dissimilar metals (except conduit and conduit fittings) come in contact, the CONTRACTOR shall isolate these metals, as required, with neoprene washers, 9 mil polyethylene tape, or gaskets. Where fastening conduit, electro-plated or equivalent fasteners and stainless steel bolts shall be used.

B. Factory finishes damaged during shipping, or construction, shall be restored to original new condition. Rust shall be removed, and bare metal surfaces shall be primed and painted to match the original surrounding finish.

C. Electrical panels, switchgear, motor control centers, and other electrical equipment, shall be shipped in sealed dust and moisture proof plastic sheet enclosures, and the seal maintained until units are installed. Said units shall be new and free of any dirt, dust, water, grease, rust, damaged parts or components. Relays, starters, circuit breakers, switches, contacts, insulators, mechanisms, and buses shall be free of dust, dirt, oil, moisture, metal shavings, and other debris before testing and energizing.

D. Once equipment is installed, it shall be protected at all times with plastic sheet covers until the area is free of dirt, dust, paint spray, water, and other trades. Heat shall be provided to eliminate condensation.

3.06 COORDINATION OF THE ELECTRICAL SYSTEM

A. The CONTRACTOR shall verify actual equipment, and motor full-load, and locked-rotor current ratings. The necessary minimum equipment, wire, and conduit sizes are indicated on the Plans. If the CONTRACTOR furnishes equipment of different ratings, the CONTRACTOR shall coordinate the actual current rating of equipment furnished with the branch circuit conductor size, the overcurrent protection, the controller size, the motor starter, and the branch circuit overcurrent protection. The branch circuit conductors shall have a current carrying capacity of not less than 125 percent of the actual full-load current rating. The size of the branch circuit conductors shall be such that the voltage drop from the overcurrent protection devices, up to the equipment, shall not exceed 3 percent, when the equipment is running at full-load and rated voltage.

3.07 TESTING

A. The electrical work shall be free from improper grounds and short circuits. The correctness of the wiring shall be verified first by visual comparison of the conductor connections with connection diagrams. Next, individual circuit continuity checks shall be made by using electrical circuit testers. Last, the correctness of the wiring shall be verified by the actual electrical operation of the electrical and mechanical devices. Any deviation from the wiring indicated on the Plans, or accepted Drawings, shall be corrected and indicated on the record drawings.

B. Each conductor shall be identified as required by the Contract Documents. This identification shall be indicated on the record drawings to enable rapid and accurate circuit tracing by maintenance personnel.

3.08 SINGLE LINE DIAGRAMS

A. Single line diagrams, as indicated on the Drawings, show circuit voltages, circuit protection rating, and other pertinent data. Where conflicts exist on the Drawings, the single line diagrams shall take precedence. Grounding conductors are not necessarily indicated. See grounding requirements specified elsewhere herein.

END OF SECTION

SECTION 26 0519 – LOW-VOLTAGE ELECTRICAL POWER CABLES

PART 1 – GENERAL

1.01 DESCRIPTION

A. Scope:
1. Provide all labor, materials, equipment, and incidentals shown, specified, and required to furnish, install, test and terminate low-voltage cables.
2. If larger loads than indicated in the plans (such as larger motor horsepower) are required, revise the raceways, conductors, starters, variable speed drives, overload elements, and branch circuit protectors to comply with the national electrical code.
3. Types of cabling required include:
   a. Insulated cable for installation in raceways.

1.02 REFERENCES

A. Standards referenced in this Section are listed below:

ANSI/ NETA ATS	Acceptance Testing Specifications for Electrical Power Equipment and Systems
ASTM B3	Soft or Annealed Copper Wire
ASTM B8	Concentric-Lay-Stranded Copper Conductors, Hard, Medium-Hard or Soft
ASTM F2160	Solid Wall High Density Polyethylene (HDPE) Conduit Based on Controlled Outside Diameter (OD).
NEMA TC 7	Smooth Wall Coilable Electrical Polyethylene Conduit.
UL 44	Thermoset-Insulated Wires and Cables.
UL 1277	Standard for Electrical Power and Control Tray Cables with Optional Optical-Fiber Members.

1.03 QUALITY ASSURANCE

A. Regulatory Requirements: Comply with the following:
1. NEC Article 300, Wiring Methods.
2. NEC Article 310, Conductors for General Wiring.
3. NEC Article 392, Cable Trays.

1.04 SUBMITTALS

A. Action Submittals: Submit the following:
1. Product Data:
   a. Manufacturer’s literature, specifications, and engineering data for low volt insulated cable proposed for use.
   b. Manufacturer’s cable pulling calculations for all cables (power and control) that are to be pulled through the jack and bore casing. Calculations shall indicate acceptability of the proposed cables with a proposed pulling setup. Calculations shall be made and submitted for review before ductbanks are installed.

B. Informational Submittals: Submit the following:
1. Field Quality Control Submittals:
   a. Written results of field insulation resistance tests.

PART 2 – PRODUCTS

2.01 MATERIALS

A. Insulated Cable in Raceways:
   1. Application: Use for circuits located indoors and outdoors.
   2. Manufacturers: Provide products of one of the following:
      a. Southwire
      b. The Okonite Company
      c. American Insulated Wire
      d. General Cable
      e. Or ENGINEER-approved equal
   3. Material: Single or multiconductor type copper cable complying with ASTM B3 and ASTM B8 with flame-retardant, moisture- and heat-resistant insulation rated for 90°C in dry or wet locations, listed by UL.
   4. Application: Use UL listed type XHHW-2 for AWG No. 12 and larger. Use UL listed type THHN/THWN-2 for AWG No. 12 and smaller.
   5. Wire Sizes: Not smaller than AWG No. 12 for power and lighting and AWG No. 14 for 120-volt control circuits.
   6. Stranding: 600-volt cable shall be stranded, except that solid cable, AWG No. 10 and AWG No. 12 may be used for lighting circuits and receptacle circuits.
   7. Cables in Cable Trays shall be listed for cable tray use and be installed per NEC 392.

B. Cable Connectors, Solderless Type:
   1. Products and Manufacturers: Provide products of one of the following:
      a. T&B Sta-Kon
      b. Burndy Hylug
      c. Or ENGINEER-approved equal
   2. For wire sizes No. 4 AWG and above, use either compression type or bolted type with silver-plated contact faces.
   3. For wire sizes up to and including No. 6 AWG, use compression type. Alarm and control wire shall be terminated using forked type connectors at terminal boards.
   4. For wire sizes No. 250 KCMIL and larger, use connectors with at least two cable clamping elements or compression indents and provision for at least two bolts for joining to apparatus terminal.
   5. Properly size connectors to fit fastening device and wire size. Connectors shall be rated for 90°C, 600 volts.

C. Cable Splices:
   1. Products and Manufacturers:
      a. Compression-Type Splices: Provide one of the following:
         1) Burndy Hylink
         2) T&B Color-Keyed Compression Connectors
         3) Or ENGINEER-approved equal
      b. Spring Connectors: Provide one of the following:
         1) Buchanan B-Cap
         2) T&B Wire Connector
         3) Or ENGINEER-approved equal

2. For wire sizes No. 8 AWG and larger, splices shall be made up with compression type copper splice fittings. Splices shall be taped and covered with materials recommended by cable manufacturer to provide insulation equal to that on conductors.
3. For wire sizes No. 10 AWG and smaller, splices may be made up with pre-insulated spring connectors.
4. For wet locations, splices shall be waterproof. Compression type splices shall be waterproofed by sealant-filled, thick wall, heat shrinkable, thermosetting tubing or by pouring thermosetting resin into mold that surrounds the joined conductor. Spring connector splices shall be waterproofed with sealant filler.
5. Splices shall be suitably sized for cable, rated 90°C, and 600 volts.

D. Wire and Cable Markers:
1. Provide wire and cable markers in accordance with these Specifications.

E. Variable Frequency Drive Symmetrical Type Cable:
1. Power Conductors: Three (3) annealed, tinned, stranded copper per ASTM B8, coated per ASTM B33.
2. Insulation: Black cross-linked polyethylene (XLPE) per UL44.
3. Ground: Three (3) symmetrically placed bare annealed Class B stranded copper conductors per ASTM B3 and B8 whose cross-section areas shall add to equal the cross-section area of the power conductor size. The conductors shall be in direct contact with the shield and may be tinned or untinned.
4. Shield: Overall annealed 5 mil bare copper tape shield, 50% overlap for 100% coverage OR overall tinned copper braided shield and aluminum polymer tape for 100% coverage.
5. Jacket: Polyvinyl Chloride (PVC), oil resistant, per UL1277.
6. Voltage insulation: 2000V.
7. Cable size shall be as indicated on the Drawings.
8. Splices: Splices in VFD cables shall not be permitted.
9. Connections and Termination: cable and shield terminations and connections shall be in complete accordance with VFD, motor and cable manufacturers published requirements.
10. Manufacturers: General Cable CVTC-VFD; Southwire type TC VFD cable; or equal.

2.02 SOURCE QUALITY CONTROL

A. Factory Tests:
1. Factory-test wire and cable in accordance with UL standards

PART 3 – EXECUTION

3.01 INSTALLATION

A. Install cables complete with proper terminations at both ends. Check and correct for proper phase sequence and proper motor rotation.

B. Pulling:
1. Use insulating types of pulling compounds containing no mineral oil.
2. Pulling tension shall be within limits recommended by wire and cable manufacturer.
3. Use dynamometer where mechanical means are used.
4. Cut off section subject to mechanical means.

C. Bending Radius: Limit to minimum of six times cable overall diameter and in accordance with manufacturer requirements.

D. Slack: Provide maximum slack at all terminal points.

E. Splices:
1. Where possible, install cable continuous, without splice, from termination to termination.
2. Where required, splice as shown and also where required for cable installation. Splices below grade, in manholes, handholes, and wet locations shall be waterproof.
3. Splices are not allowed in conduits.
4. Splices are not allowed in VFD cables.

F. Identification:
1. Identify conductors in accordance with applicable Sections of Division 26 – Electrical.
2. Identify power conductors by circuit number and phase at each terminal or splice location.
3. Identify control and status wiring using numeral tagging system.

G. Color-code power cables as follows:
1. No. 8 AWG and Smaller: Provide colored conductors.
2. No. 6 AWG and Larger: Apply general purpose, flame retardant tape at each end, wrapped in overlapping turns to cover an area of at least two inches.
3. Colors: Match color scheme in use at the Site. If the Site does not have an existing color scheme, use the following colors:

System	Conductor	Color
All Systems	Equipment Grounding	Green
240/120 Volts Single-Phase, Three-Wire	Grounded Neutral One Hot Leg Other Hot Leg	White Black Red
208Y/120 Volts Three-Phase, Four-Wire	Grounded Neutral Phase A Phase B Phase C	White Black Red Blue
480Y/277 Volts Three-Phase, Four-Wire	Grounded Neutral Phase A Phase B Phase C	Gray Brown Orange Yellow

3.02 FIELD QUALITY CONTROL

A. Site Tests:
1. Test each electrical circuit after permanent cables are in place, to demonstrate that circuit and equipment are connected properly and will perform satisfactorily, free from improper grounds and short circuits. Document each test performed.
2. Individually test 600-volt cable mechanical connections after installation and before they are put in service, with calibrated torque wrench. Values shall be in accordance with manufacturer's recommendations.
3. Individually test 600-volt cables for insulation resistance between phases and from each phase to ground. Test after cables are installed and before they are put in service, with Megger for one minute at voltage rating recommended by cable manufacturer or in accordance with ANSI/NETA ATS recommendations.
4. Insulation resistance for each conductor shall not be less than value recommended by cable manufacturer. Cables not meeting recommended value or that fail when tested under full load conditions shall be replaced with a new cable for full length.

END OF SECTION

SECTION 26 0523 – INSTRUMENTATION AND COMMUNICATION CABLES

PART 1 – GENERAL

1.01 DESCRIPTION

A. Scope:
1. Provide all labor, materials, equipment, and incidentals shown, specified, and required to furnish and install instrumentation and communication cables.

1.02 REFERENCES

A. Standards referenced in this Section are listed below:

ASTM A510/ A510M	Wire Rods and Coarse Round Wire, Carbon Steel and Alloy Steel
ASTM B633	Electrodeposited Coatings of Zinc on Iron and Steel
ANSI/TIA/ EIA-568	Commercial Building Telecommunications Cabling (requirements and restrictions of Technical Service Bulletins (TSBs) apply.)
RS-485	Electrical Characteristics of Generators and Receivers for Use in Balanced Digital Multipoint Systems (also known as TIA/EIA-485).
UL 13	Power-Limited Circuit Cables
UL 1581	Standard for Electrical Wires, Cables and Flexible Cords
UL VW-1	Vertical Wire Flame Test
UL 1666	Test for Flame Propagation Height of Electrical and Optical-Fiber Cables Installed Vertically in Shafts

1.03 QUALITY ASSURANCE

A. Regulatory Requirements:
1. NEC 725 – Class 1, Class 2, and Class 3 Remote-Control, Signaling and Power-Limited Circuits
2. NEC 727 – Instrumentation Tray Cable
3. NEC 800 – Communications Circuits

1.04 SUBMITTALS

A. Action Submittals: Submit the following:
1. Product Data: Manufacturer's technical information for instrumentation cables and communications cables proposed.
2. Provide pulling calculations for cables to be installed in the jack and bore ductbank.

B. Informational Submittals: Submit the following:
1. Field Quality Control Submittals: Written report of results of field quality control testing specified in this Section.

PART 2 – PRODUCTS

2.01. MATERIALS

A. Single and Multiple Shielded Pair Instrument Cable:
1. Bare, soft annealed copper, 7 strand, PVC insulated conductors, No. 16 AWG minimum (unless indicated otherwise on the drawings / conduit schedule), twisted with aluminum/mylar shield with 25 percent minimum overlap, stranded tinned 20 AWG copper drain wire and PVC outer jacket. Rated for 600 volts. Temperature rated 90°C in dry installations, rated 75°C in wet locations. UL Type TC, UL listed for cable tray use, sunlight resistant. The abbreviation "STP" or "TSP" is used for shielded twisted pair on the Drawings.

2. Product and Manufacturer: Provide shielded cable of the following:
   a. Alpha Wire Company.
   b. Or ENGINEER-approved equal.
3. Cable shall be plenum rated when all or part of the cable is not encased in conduit.
4. Multi pair instrument cable shall have individual pair shielding and overall shielding.

B. Cable Terminals:
1. Manufacturers: Provide products of one of the following:
   a. T&B Sta-Kon
   b. Burndy Insulug
   c. Or ENGINEER-approved equal
2. Fork type copper compression terminals with nylon insulation for termination of cable at terminal blocks.

C. Single Shielded Triad Instrument Cable:
1. Bare, soft annealed copper, 7-strand, PVC insulated conductors, No. 16 AWG minimum, twisted with aluminum/mylar shield with 25 percent minimum overlap, stranded tinned 20 AWG copper drain wire and PVC outer jacket. Rated for 600 volts. Temperature rated 90°C in dry installations, rated 75°C in wet locations. UL Type TC, UL listed for cable tray use, sunlight resistant. The abbreviation “STT” or “TST” is used for shielded twisted triad on the Drawings.
2. Product and Manufacturer: Provide shielded cable of the following:
   a. Alpha Wire Company.
   b. Or ENGINEER-approved equal
3. Cable shall be plenum rated when all or part of the cable is not encased in conduit.

D. Shielded Ethernet Category 5e Premises Cable:
1. This cabling is for outdoor applications, process control interface (VFDs, PLCs, etc.), lighting control component interconnections, and anywhere network cables will be routed in the same ductbank, manhole, handhole, or other raceway as AC power cabling.
2. Furnish, install, and terminate from each field device to the network switch.
   a. Suitable Applications: Gigabit Ethernet, 100BaseTX, 100MHz Category 5e.
   b. Number of Pairs: 4
   c. Total Number of Conductors: 8
   d. AWG: 24
   e. Stranding: Solid
   f. Conductor Material: Bare Copper
   g. Color Code: EIA 568
   h. Shield: Double-shielded version with 100% coverage aluminum foil tape plus tinned copper braid
   i. Insulation Material: Polyolefin
   j. Outer Jacket Material: PVC, outdoor rated, sunlight resistant, oil resistant
   k. Outer Jacket Color: Blue.
   l. TIA/EIA Specification: 1005, 568B compliant
   m. UL Flame Test: UL 1666 Riser compliant
   n. Manufacturer: Belden, Model 7957A
   o. Use shielded RJ45 strain relief plug systems by L-com (TDS8PC5) with plug-boots (TDS8CVR-BK).

PART 3 – EXECUTION

3.01 INSPECTION

A. Examine conditions under which materials and equipment will be installed and notify OWNER in writing of conditions detrimental to proper and timely completion of the work. Do not proceed with the work until unsatisfactory conditions are corrected.

3.02 INSTALLATION

A. General:
   1. Install cables complete with proper terminations at both ends.
   2. Install in conduit separate from power cables, unless shown or indicated otherwise.
   3. Ground shield on shielded cables at the source end (PLC panel, etc.).
   4. Identify conductors in accordance with these Specifications.
   5. Install and terminate Supplier-furnished cable in accordance with equipment manufacturer requirements and cable manufacturer’s recommendations.
   6. Install in accordance with Laws and Regulations, including NEC.
   7. Splicing of instrumentation and communication cables is not permitted unless approved by the ENGINEER of record.

3.03 FIELD QUALITY CONTROL

A. Site Tests:
   1. Test shielded instrumentation cable shields with ohmmeter for continuity along full length of cables, and for shield continuity to ground.
   2. Connect shielded instrumentation cables to calibrated 4 to 20 mA DC signal transmitter and receiver. Test at 4 and 20 mA DC transmitter settings.
   3. Replace with new cables the full length of cables that fail test.
   4. Test equipment shall be provided by CONTRACTOR.
   5. Test all Ethernet cables with a Fluke DSP100 Cable Meter (or equal) testing system. Each cable shall be tested from the connected data jack, control panel, VFD, UPS, etc., to the patch panels. A qualified factory-trained manufacturer's representative shall certify in writing that the network cabling system has been installed, adjusted, and tested in accordance with the cable manufacturer's recommendations and industry standards for performance testing. Certification shall bear the typewritten name and signature of the person responsible for the work. Certification shall state the unit has passed all tests and is ready to be placed into operation. Provide four (4) copies of the manufacturer's representative's certification.

END OF SECTION

SECTION 26 0526 – GROUNDING AND BONDING FOR ELECTRICAL SYSTEMS

PART 1 – GENERAL

1.01 SCOPE OF WORK

A. A ground grid system consisting of the indicated configuration of copper wires, and ground rods, or concrete encased grounding electrodes ("UFERs") shall be provided to minimize station potential gradient irregularities and drain leakage and fault currents to earth.

B. Whether indicated on the Plans or not, neutral conductors, cable shields, metallic conduits, cable terminations, junction boxes, poles, surge arresters, and other non-current-carrying metallic parts of equipment shall be grounded.

1.02 SUBMITTALS

A. Products shall be submitted in accordance with Section 01 3300 – Submittal Procedures, and elsewhere in the Contract Documents prior to installation.

1.03 REFERENCES

A. National Electrical Code (NEC) Article 250

PART 2 – PRODUCTS

2.01 GENERAL REQUIREMENTS

A. A resistance of not greater than 25 ohms shall be provided, unless otherwise specified. Ground resistances shall be measured as herein described. Resistances of systems requiring separate ground rods, rather than a counterpoise, shall be measured separately before bonding below grade. The combined ground resistance of separate systems bonded together below grade may be used to meet the specified ground resistance, but the minimum number of rods indicated must still be provided.

2.02 GROUND RODS

A. Ground rods shall be copper-clad steel conforming to UL 467, 3/4 inch in diameter by 10 feet in length. Unless otherwise indicated, ground rods shall be driven into the ground until tops of rods are approximately 6 inches below finished grade. In counterpoise systems. Tops of ground rods shall be approximately at elevations of counterpoises. Where the specified ground resistance cannot be met with the indicated number of ground rods, additional ground rods, longer ground rods, or deep-driven sectional rods shall be installed and connected until the specified resistance is obtained, except that not more than three additional ground rods shall be required at any one installation. Ground rods shall be spaced as evenly as possible at least 6 feet apart and connected below grade.

2.03 CONNECTIONS

A. Connections above grade shall be made with bolted solderless connectors, and those below grade shall be made by a fusion-welding process. An embossing die code or other standard method shall provide visible indication that a connector has been adequately compressed on the ground wire.

2.04 GROUNDING ELECTRODE CONDUCTOR

A. Service entrance ground wires shall be sized in accordance with the most recent publication of NEC Table 250-66, unless otherwise indicated on the Plans. After being located to provide maximum physical protection, exposed ground wires shall be securely attached to structural supports at not more than 2-foot intervals with suitable fasteners. Bends greater than 45 degrees in ground wires are not permitted. Routing of ground conductors through concrete should be avoided, except where specifically called for in

these Documents. When concrete penetration is necessary, nonmetallic conduit shall be cast flush with the points of concrete entrance and exit, so as to provide an opening for the ground wire. The opening shall be sealed with a suitable compound after installation of the ground wire.

2.05 EQUIPMENT GROUNDING CONDUCTOR

A. Neutral conductors shall be grounded where indicated. Equipment grounding conductors shall be sized in accordance with the most recent publication of NEC Table 250-122, unless otherwise indicated. Ground wires shall be protected by conduit, where such wires run exposed above grade in non-fence-enclosed areas, or are run through concrete construction. Where concrete penetration is necessary, nonmetallic conduit shall be cast flush with the points of concrete entrance and exit, so as to provide an opening for the ground wire. The opening shall be sealed with a suitable compound after installation of the ground wire. Bends greater than 45 degrees in ground wire connections to the ground rods, or counterpoises are not permitted.

2.06 EQUIPMENT GROUNDING

A. Equipment frames of motor housings, metallic tanks, metallic equipment enclosures, metal splicing boxes, chain-link fencing, and other metallic noncurrent-carrying metal items, shall be grounded. Connections to earth shall be made in the same manner as required for system grounding. Equipment or devices operating at less than 750 volts may be connected to secondary neutral grounding electrodes.

2.07 SURGE ARRESTER GROUNDING

A. Surge arresters shall be grounded. Resistance to ground for intermediate-class arresters shall be not more than 10 ohms and for distribution-class arresters shall be not more than 25 ohms. Ground wire connections shall be not less than No. 4 AWG for distribution arresters and No. 1/0 AWG for intermediate arresters. Connections to earth shall be made in the same manner as required for neutral conductors. Surge arrester grounds may use the same ground wires provided for equipment operating at more than 750 volts. Surge arrester and secondary neutral grounds shall be separate from and independent of each other but both grounds shall be bonded together below grade at the ground rods or may utilize a common counterpoise.

2.08 LIGHTING POLE GROUNDING

A. Base of lighting poles shall be connected to an adjacent ground rod as indicated on Plans. A ground connection from poles back to neutral ground points shall also be provided utilizing equipment grounding conductor.

2.09 METALLIC STRUCTURES

A. Metallic structures and buildings shall be grounded per NEC.

2.10 GROUNDING RINGS

A. When required, grounding rings shall be installed using bare copper cable with ground rods at least 25 feet intervals using thermoweld connecting means as indicated on Plans in accordance with NEC requirements.

PART 3 – EXECUTION

3.01 INSTALLATION

A. It is the intent of these Contract Documents that all device and equipment grounds shall be run as a separate conductor in the conduit from the equipment to the ground. Wireways and enclosures shall be properly bonded and grounded, and ground conductors shall be run for all circuits.

B. Equipment cases and devices shall be grounded. Ground rods shall be driven and concrete encased conduits installed before a building or structure is built and ground conductors brought through the concrete to accessible points for grounding equipment. These systems shall be installed at each structure, where transformers, switchboards, panelboards, and MCCs are installed.

C. Duct banks shall contain a concrete encased system bare copper ground conductor. The system ground conductors shall run continuously in duct banks, through handholes and other raceway boxes. The system ground shall be connected to the structure grounding systems to provide a continuous grounding system. Each metallic raceway, panel, switchboard, and other metallic devices associated with the electrical and control systems shall be bonded to this grounding system.

D. Ground rod shall be installed not less than 6 inches below grade. Equipment, neutral, and surge arrester ground wires shall be connected to the ground grid as indicated.

E. Make buried and concrete-encased cable-to-cable and cable-to-ground rod connections using exothermic welds by Cadweld, Thermoweld**,** or ENGINEER-approved equal.

F. Each raceway must have a separate grounding conductor independent from the raceway material.

G. Route the conductors inside the raceway.

H. Interconnect the secondary MCC, switchgear, or panelboard neutral bus to the ground bus in the secondary switchgear compartment only at the service entrance point or after a transformer.

3.02 TESTS

A. Pre-Energization Tests - Pre-energization tests shall include, but shall not be limited to tests that the equipment engineer is required to perform under paragraph "GENERAL REQUIREMENTS." No part of the electrical system shall be energized until all station grounding system components have been tested and demonstrated to comply with the requirements specified, and until associated test reports have been submitted and approved.

B. Operating Test - After the installation is completed, the CONTRACTOR shall conduct an operating test for approval. Equipment shall be demonstrated to operate in accordance with the requirements herein. Tests shall be performed in the presence of the ENGINEER. The CONTRACTOR shall furnish instruments and personnel required for the test.

C. Ground-Resistance Measurements - Ground-resistance measurements of each ground rod shall be taken and certified by the CONTRACTOR to the ENGINEER. No part of the electrical distribution system shall be energized prior to the resistance testing of that system's ground rods and grounding system and submission of test results to the ENGINEER. Test reports shall indicate the location of the ground rod and grounding system and the resistance and the soil conditions at the time the test was performed. When the building water service is used as a ground or part of the grounding system, ground-resistance measurements shall also be made of this connection. Ground-resistance measurements shall be made in normally dry weather, not less than 48 hours after rainfall, and with the ground under test isolated from other grounds. The resistance to ground shall be measured using the fall-of-potential method described in IEEE Std 142 and Std 81.

3.03 TEST RESULTS

A. The CONTRACTOR shall perform the above tests and submit a certified test report prior to energizing the equipment.

END OF SECTION

SECTION 26 0529 – HANGERS AND SUPPORTS FOR ELECTRICAL SYSTEMS

PART 1 – GENERAL

1.01 DESCRIPTION

A. This Section outlines the wiring requirements for the electrical work and forms a part of all other Sections of Division 26 unless otherwise specified.

1.02 SUBMITTALS

A. Submit for the OWNER's approval material lists, shop drawings, factory test reports, and technical data to the extent required in these Specifications.

PART 2 – PRODUCTS

2.01 GENERAL

A. Provide basic materials and all wiring installations as indicated, specified, and required.

2.02 SUPPORTS

A. Provide the galvanized and PVC coated metal channels, fittings, stanchions, clamps, hangers, and required hardware to support all conduit and equipment as required.

B. Channels shall be steel and cold rolled. One side of the channel shall have a continuous slot. On both sides of the slot, the edges turn inward and forms a guide for the spring nuts. The fittings shall be fabricated from steel and attached to the channel with bolts and spring nuts. The channel, fittings and hardware shall be hot-dipped galvanized and manufactured by Unistrut, GTE Products Co., Ideal Industries, Josyln Mfg & Supply Co., or ENGINEER-approved equal.

C. One-Hole Clamps shall be malleable iron, galvanized for steel conduits and equipped with clamp-backs. The clamps shall be Efcor, Thomas and Betts, Appleton or ENGINEER-approved equal.

D. Beam Clamps shall be malleable iron, galvanized, right angle and parallel types. The clamps shall be manufactured by Efcor, Thomas and Betts, Appleton or ENGINEER-approved equal.

E. Spacers shall be plastic and provided to support underground conduits for concrete encasements. The spacers shall be Carlon, Johns-Manville, Underground Products or ENGINEER-approved equal.

F. Steel Anchors shall be sleeve and stud types for securing equipment to concrete foundations, floors, and walls. The anchors shall be Phillips "Red Head", Diamond or ENGINEER-approved equal. Concrete foundation to include 4" housekeeping pad.

G. Toggle Bolts shall be steel, spring wing type for securing equipment to hollow walls and ceilings. Toggle bolts shall be Phillips "Red-Head", Diamond or ENGINEER-approved equal.

H. Conduit Hangers shall be heavy gauge formed steel, galvanized, and equipped with carriage bolts, 1/4-inch rods and nuts. The hangers shall be Efcor, Appleton, Ideal Industries, Josyln Mfg & Supply Co. or ENGINEER-approved equal.

I. U-Bolts shall be heavy gauge steel, galvanized and equipped with two hexagon steel nuts. The U-bolts shall be Efcor, Kindorf or ENGINEER-approved equal.

J. Hardware shall be provided to securely attach all equipment and materials.

PART 3 – EXECUTION

3.01 GENERAL

A. A. Provide the required labor and equipment, and all checking, adjusting, and testing operations on the electrical installations.

3.02 SUPPORTS

A. Install the required structural channels, brackets, stanchions, U-bolts, clamps, anchors, hangers, fittings, and other hardware to securely attach and support all the equipment and conduits.

B. Painting. Brackets, stanchions, and other unfinished steel supports shall be painted per requirements of these Specifications.

C. Operation Tests. Perform operation tests and observe that all loads operate satisfactorily.

3.03 CHECKING, ADJUSTING AND TESTING

A. Provide the required labor and equipment, and all checking, adjusting, and testing operations on the electrical installations.

END OF SECTION

SECTION 26 0533.13 – CONDUIT FOR ELECTRICAL SYSTEMS

PART 1 – GENERAL

1.01 SCOPE OF WORK

A. Furnish and install conduits as required, and as shown on the Plans. Materials employed shall be as shown on the Plans.

1.02 SUBMITTALS

A. Submit product literature including manufacturer part number, model number, material, size, and specifications. Material shall not be installed until the ENGINEER has reviewed the submittal data.

B. Shop Drawings shall be submitted for review and acceptance showing routing, conduit size, and number and size of wires in each conduit before installation of conduit and any related work.

C. Proposed routing of conduits buried under floor slabs-on-grade.

D. Identify conduit by tag number of equipment served or by circuit schedule number.

E. Proposed routing and details of construction including conduit and rebar embedded in floor slabs, columns, etc. Identify conduit by tag number of equipment served or by circuit schedule number.

F. Proposed location and details of construction for openings in slabs and walls for raceway runs.

1.03 REFERENCES

A. American National Standards Institute (ANSI): C80.1, Electrical Rigid Steel Conduit.

B. National Electric Manufacturers Association (NEMA):
1. RN-1, Polyvinyl-Chloride (PVC) Externally Coated Galvanized Rigid Steel Metal Conduit and Intermediate Metal Conduit
2. TC-2, Electrical Polyvinyl Chloride (PVC) Conduit

C. Underwriters Laboratories Inc. (UL):

1	Flexible Metal Conduit
6	Electrical Rigid Metal Conduit - Steel
360	Liquid-Tight Flexible Steel Conduit
467	Grounding and Bonding Equipment
514C	Nonmetallic Outlet Boxes, Flush-Device Boxes and Covers
651	Schedule 40, 80, Type EB and A Rigid PVC Conduit and Fittings
870	Wireways, Auxiliary Gutters, and Associated Fittings
884	Underfloor Raceways and Fittings
886	Outlet Boxes and Fittings for Use in Hazardous (Classified) Locations

PART 2 – PRODUCTS

1.01 RACEWAYS

A. Indoor exposed conduit shall be galvanized rigid steel (GRS) unless specifically indicated otherwise on the Plans. Exposed conduits outdoors or in a wet or corrosive area shall be PVC coated GRS unless otherwise indicated Underground and/or concrete encased conduits shall be PVC, unless otherwise indicated. All wiring, except as otherwise noted, shall be in conduit. Conduit size shall not be less than the National Electrical Code (NEC)

size required for the conductors therein and shall not be smaller than 3/4-inch. No underground conduit shall be less than one inch.

B. Condulet type fittings shall be Form 8, Crouse-Hinds, Appleton, or ENGINEER-approved equal with gasketed covers. All condulets located outdoors or in wet locations shall be weathertight.

C. In unclassified areas, flexible conduit shall be grounding type, weatherproof, corrosion resistant, and watertight. If indicated on the plans, liquidtight flexible conduit shall have an external bonding jumper. Connectors shall be as manufactured by OZ-Gedney, Type 4Q-L, or ENGINEER-approved equal.

D. Couplings, connectors, and fittings shall be standard types specifically designed and manufactured for the purpose. They shall be installed to provide a firm mechanical assembly and electrical conductivity throughout.

E. Expansion fittings shall be OZ type AX with jumper for exposed locations and type DX at structural expansion joints, Spring City, or ENGINEER-approved equal. Conduits shall have expansion fittings in accordance with NEC.

F. The conduits and fittings shall be supported per NEC requirements as a minimum.

1.02 GALVANIZED RIGID STEEL (GRS)

A. Conduit and couplings shall be hot-dipped galvanized with zinc coated threads and outer coating of zinc bichromate, in accordance with ANSI C80.1 standards, as manufactured by Jones & Laughlin Steel Corporation, Allied Tube & Conduit Corporation, Triangle PWC, Republic, Youngstown, or ENGINEER-approved equal.

B. Steel conduit shall not be buried in earth without concrete encasement and additional corrosion protection. A half lapped rapping of 20 mil PVC based corrosion protection tape shall be used.

1.03 PVC COATED GALVANIZED RIGID STEEL (PVC-GRS)

A. PVC coated GRS conduit shall conform to NEMA RN-1 and ANSI C80.1 standards.

B. The zinc surface of the conduit shall remain intact and undisturbed on both the inside and the outside of the conduit throughout the preparation and application processing. A Polyvinyl Chloride (PVC) coating shall be bonded to the galvanized outer surface of the conduit. The bond between the PVC coating and the conduit surface shall be greater than the tensile strength of the plastic. The thickness of the PVC coating shall be a minimum of 0.040-inch (40 mil).

C. A loose coupling shall be furnished with each length of conduit. A PVC coating shall be bonded to the outer surface of the coupling and a PVC sleeve equal to the outside diameter of the uncoated conduit shall extend beyond both ends of the coupling approximately one pipe diameter or 1-1/2 inches, whichever is smaller. The wall thickness of the coating on the coupling and the sleeve shall be a minimum of 0.055-inch (55 mil).

D. A PVC coating shall be bonded to the inner and outer surface of all conduit bodies and fittings and a PVC sleeve shall extend from all hubs. The wall thickness of the coating on conduit bodies and fittings and the sleeve walls shall be identical to those on couplings in length and thickness. The covers on all conduit bodies shall be coated on both sides and shall be designed to be completely interchangeable. The inside of conduit bodies shall remain undisturbed in the processing.

E. Type 316 stainless steel screws shall be furnished and used to attach the cover to the conduit body. All coated material shall be installed and patched according to the

manufacturer's recommended installation and patching instructions.

F. Conduit straps shall be PVC coated or 316 stainless steel.

G. PVC coated conduit and fittings shall be as manufactured by Plasti-Bond, Perma-Cote, Occidental Coating Company, Kor Kap, or ENGINEER-approved equal.

H. PVC coated flexible conduits shall be liquid and vaportight and manufactured in accordance with UL 360 standards.

2.04 RIGID NONMETALLIC - PVC

A. Where specifically indicated on the Plans, or elsewhere specified, conduit may be high density Schedule 40, 90°C, heavy-duty PVC. The conduit shall be manufactured from virgin polyvinyl chloride compound which meets ASTM D1784, NEMA TC-2, and UL 651 standards. Smoke emissions shall be limited to less than 6 grams per 100 grams of material tested.

B. Where conduit concrete encasement is indicated on the Plans, conduit supports shall be installed at five foot intervals. PVC conduit shall be manufactured by Carlon, Triangle Conduit & Cable, or ENGINEER-approved equal.

2.05 LIQUIDTIGHT FLEXIBLE METAL CONDUIT

A. Liquidtight flexible metal conduit shall be liquid and vaportight, oil and ultraviolet ray resistant and manufactured in accordance with UL 360 standards. Liquidtight flexible metal conduit shall be formed of a continuous, spiral wound, galvanized steel core with an extruded PVC jacket. The PVC jacket shall be rated for high ambient heat applications, 90°C.

B. For corrosive locations, liquidtight flexible metal conduit shall be formed of a continuous, spiral wound, aluminum core with an extruded PVC jacket. The PVC jacket shall be impervious to corrosive liquids and vapors.

C. An external bonding conductor shall be required for all flexible conduit connections. Flexible conduit and connectors shall be listed for grounding.

D. Connectors for liquidtight flexible conduit shall be galvanized, furnished with a sealing ring and locknut, and suitable for wet locations.

PART 3 – EXECUTION

3.01 INSTALLATION

A. Conduit runs are schematic only, and shall be modified as required to suit field conditions, subject to review and acceptance by the ENGINEER.

B. Conduit shall run continuously between outlets and shall be provided with junction boxes where connections are made. Couplings, connectors, and fittings shall be acceptable types designed and manufactured for the purpose, and shall provide a firm mechanical assembly, and electrical conductivity throughout.

C. Conduit runs shall be straight and true. Elbows, offsets, and bends shall be uniform and symmetrical. Changes in direction shall be made with long radius bends, or with fittings of the condulet type.

D. Conduit runs in buildings and structures shall be exposed except as specifically noted, or accepted by the ENGINEER.

E. Conduit runs shall not interfere with the proper and safe operation of equipment, and shall not block or interfere with ingress or egress, including equipment removal hatches.

F. Exposed conduits shall be securely fastened with clamps, or straps, intended for conduit use. All exposed conduit shall be run on the walls and ceiling only and shall be parallel to the planes of the walls or ceiling. No diagonal runs will be permitted. Flexible conduit shall be used only for short lengths required to facilitate connections between rigid conduit to motors from junction boxes, or control equipment. The maximum length of flexible conduit shall be 3 feet.

G. Conduit runs on water-bearing walls shall be supported one inch away from the wall on an accepted channel. When channel galvanizing, or other coating, is cut or otherwise damaged, it shall be field coated to original condition. No conduit shall be run in water-bearing walls, unless specifically designated otherwise.

H. Conduit shall be thoroughly reamed to remove burrs. GRS shall be reamed during the threading process, and Rigid Nonmetallic PVC shall be reamed before applying fittings. A zinc rich cold galvanizing shall be used to restore corrosion protection on field cut threads. Bushings and lock nuts or hubs shall be used at conduit terminations. The total number of bends in any run between pull points shall not exceed 360 degrees. Junction boxes and pull boxes shall be installed at points acceptable to the ENGINEER. Conduit ends shall be plugged to prevent the entrance of moisture or debris during construction. All spare conduits shall be adequately capped and shall contain a suitable pull string.

I. Joints shall be set up tight. Hangers and fastenings shall be secure, and of a type appropriate in design, and dimensions, for the particular application.

J. Conduit runs shall be cleaned and internally sized (obstruction tested) so that no foreign objects, or obstructions remain in the conduit prior to pulling in conductors.

K. After installation of complete conduit runs 2 inches and larger, conduits shall be snaked with a conduit cleaner equipped with a cylindrical mandrel of a diameter not less than 85 percent of the nominal diameter of the conduit. Conduits through which the mandrel will not pass shall not be used.

L. Expansion fittings shall be installed across all expansion joints and at other locations where necessary to compensate for thermal expansion and contraction.

M. Provide trenching, backfill, and compaction for conduits installed underground.

N. Each conduit shall be provided with tags as specified on the plan details or with stainless steel identification tags affixed by means of stainless steel wire to the conduit's termination bushing. The minimum size of the identification tags shall be ¾-inch X 2-inches. The identification tag shall be embossed with the conduit number shown in the Plans. The letters and numbers on the tags shall, as a minimum, be 1/4-inch high.

END OF SECTION

SECTION 26 0533.16 – BOXES FOR ELECTRICAL SYSTEMS

PART 1 – GENERAL

1.01 SUMMARY

A. Section Includes:
   1. Outlet, pull and junction boxes.

1.02 QUALITY ASSURANCE

A. Referenced Standards: As required in these Specifications.

1.03 SUBMITTALS

A. Shop Drawings: In accordance with Section 01 3300 – Submittal Procedures.

1.04 DELIVERY, STORAGE, AND HANDLING

A. In accordance with these Specifications and Contract Documents.

PART 2 – PRODUCTS

2.01 ACCEPTABLE MANUFACTURERS

A. Subject to compliance with the Contract Documents, the following manufacturers are acceptable:
   1. Galvanized steel boxes:
      a. Appleton Electric Co.
      b. Steel City
      c. Raco
      d. Or ENGINEER-approved equal
   2. Sheet metal boxes for non-classified areas:
      a. Hoffman Engineering Co.
      b. Or ENGINEER-approved equal
   3. Corrosion-resistant boxes:
      a. Hoffman Engineering Co.
      b. Crouse-Hinds
      c. Or ENGINEER-approved equal
   4. Hazardous location boxes (Class I, II & Ill):
      a. Appleton Electric Co.
      b. Crouse-Hinds
      c. Killark
      d. O-Z/Gedney
      e. Or ENGINEER-approved equal
   5. Raintight and watertight boxes:
      a. Appleton Electric Co.
      b. Crouse-Hinds
      c. Or ENGINEER-approved equal
   6. Terminal boxes:
      a. Hoffman Engineering Co.
      b. Or ENGINEER-approved equal
   7. Boxes in sidewalk:
      a. Appleton Electric Co.
      b. Crouse-Hinds
      c. O-Z/Gedney

d. Or ENGINEER-approved equal.

8. Boxes in earth:
   a. Carlon Electric Products.
   b. Or ENGINEER-approved equal
9. Exposed switch and receptacle boxes:
   a. Appleton Electric Co.
   b. Crouse-Hinds
   c. Or ENGINEER-approved equal.

2.02 MATERIALS

A. Pull and Junction Boxes for Offices and other Dry Architecturally Finished Areas:
   1. Material: 14 GA, galvanized steel
   2. Concentric knockouts on all four sides
   3. Flat cover fastened with screws
   4. NEMA 1 classification
   5. UL listed

B. Pull and Junction Boxes for General Use Unclassified Areas Suitable for NEMA 12 Enclosures:
   1. Material: 14 GA galvanized steel with seams continuously welded, ground smooth and no knockouts
   2. Zinc-rich coating on all seams
   3. Stainless steel captivated cover screws threaded into sealed wells
   4. Flat door with oil resistant gasket
   5. NEMA 12 classification
   6. UL listed

B. Pull and Junction Boxes for Wet Areas:
   1. Material: 14 GA steel with polyester powder coating inside and out over phosphatized surfaces.
   2. Seams continuously welded, ground smooth, no knockouts
   3. Stainless steel clamps on four sides
   4. Flat cover with oil resistant gasket
   5. NEMA 4X classification
   6. UL listed

D. Pull and Junction Boxes for Corrosive Areas:
   1. Material: 14 GA steel with powdered epoxy resin coating inside and out or fiberglass-reinforced polyester material
   2. Steel boxes:
      a. Seams continuously welded, ground smooth, no knockouts
      b. Rolled lip around all sides
      c. Hinged door
      d. Captivated stainless steel door screws
      e. Flat door with oil-resistant gasket
   3. Fiberglass-reinforced polyester boxes:
      a. Hinged door with latch and lockout
      b. Neoprene door gasket
      c. Grounding bushing(s)
   4. NEMA 4X classification
   5. UL listed

E. Pull and Junction Boxes for Hazardous Areas:
   1. Material: Cast gray iron alloy or copper-free cast aluminum
   2. Drilled and tapped openings or tapered threaded hub equipped
   3. Flat bolted-down or threaded cover with neoprene gasket
   4. Stainless steel hex head screws
   5. Explosion proof, UL listed for Class 1 Groups C and D

F. Pull and Junction Boxes for Sidewalks:
   1. Cast-iron box and cover, hot-dip galvanized
   2. Flange for flush mounting
   3. Checkered cover with neoprene gasket, pry bar slots and stainless steel screws
   4. UL listed
   5. Drilled and tapped holes
   6. Watertight NEMA 4X classification

G. Large Pull and Junction Boxes (100 CU IN and larger):
   1. Located in offices and other dry architecturally finished areas where EMT is utilized:
      a. NEMA 1 gasketed without knockouts
   2. Located in general use areas:
      a. NEMA 12 construction:
         1) Welded steel
         2) Furnished with gray enamel inside and out over phosphatized surfaces
   3. Located in wet and corrosive areas:
      a. NEMA 4X with stainless steel screws.
   4. Constructed of 14 GA steel with seams continuously welded, ground smooth, no knockouts
   5. Rolled lip around all sides
   6. Rigid handles for covers larger than 9 sf or heavier than 25 lbs.
   7. Split covers when heavier than 25 lbs.

H. Terminal Boxes:
   1. Galvanized 16 GA steel box provided with plain blank screw cover, subpanel, and terminal points
   2. Refer to Drawing for dimensions and number of terminals
   3. Terminal blocks shall be screw-post barrier-type, white center marker strip
   4. Rated 20 ampere, minimum 600 V

I. Fiberglass Cable-Pulling Enclosure:
   1. Use: Access points to facilitate pulling of electrical cables in buried conduit runs.
   2. Size and quantity: As shown on Drawings
   3. Type: Rectangular fiberglass composite, suitable for direct burial pedestrian traffic on top, -50°F, chemical, sunlight, and weather resistant.
   4. Provide matching top with "ELECTRIC" logo.

J. Outlet Boxes:
   1. Use: Installation of wiring devices
   2. Boxes for exposed wiring:
      a. Cadmium plated, cast, ferrous metal, with threaded hubs
   3. Boxes for concealed wiring:
      a. Code gauge, hot-dip galvanized steel
      b. Include bar hangers for metal stud partitions
      c. Provide barriers between switches in boxes with 277 V switches on opposite phases

d. Use extension and plaster rings where required
e. Provide grounding screw.

PART 3 – EXECUTION

3.1 INSTALLATION

A. Use locknut and bushing for boxes in non-classified areas.

B. Use cast metal boxes with threaded conduit hubs in hazardous areas.

C. Use Type FS and FD boxes in wet areas and where exposed rigid steel conduit is required.

D. Use epoxy resin coated, stainless steel, cast aluminum or fiberglass boxes for corrosive areas.

E. Fill unused punched-out, tapped, or threaded hub openings with insert plugs.

F. Use outlet boxes sized to accommodate quantity of conductors enclosed.

G. Use boxes sized to accommodate conduit tying into box.

H. Install pull boxes or junction boxes in conduit runs where indicated or required to facilitate pulling of wires or making connections.
   1. Make covers of boxes accessible.

I. Install pull boxes or junction boxes rated for the area classification.

J. Install rigid conduit squarely into boxes which do not have hubs or are drilled and tapped.
   1. Install with locknut on the outside and bushing on inside.

K. Install conduit into boxes with hubs, or that are tapped, using thread lubricant.

L. Do not use back-to-back boxes on this Project.

M. Seal all points of conduit entry into fiberglass cable-pulling enclosures for a waterproof installation.

N. Support outlet boxes for incandescent fixtures and other ceiling-mounted devices in lay-in acoustical tile ceilings by bar hangers anchored to ceiling construction members which do not interfere with tile removal.

END OF SECTION

SECTION 26 0553 – IDENTIFICATION FOR ELECTRICAL SYSTEMS

PART 1 – GENERAL

1.01 SCOPE OF WORK

A. Electrical identification work specified in this section covers the following:
   1. Buried cable warnings
   2. Electrical power, control and communication conductors
   3. Operational instructions and warnings
   4. Danger signs
   5. Equipment/system identification signs

1.02 SUBMITTALS

A. Submittals to the ENGINEER shall include the following:
   1. Manufacturers data on electrical identification materials and products.
   2. Samples of each color, lettering style and other graphic representation required for each identification material or system.

1.03 MANUFACTURERS

A. Subject to compliance with requirements, manufacturers offering electrical identification products may be incorporated in the work include, but not limited to, the following:
   1. Brady, W.H. Co.
   2. Ideal Industries, Inc.
   3. Panduit Corp.
   4. or ENGINEER-approved equal

1.04 QUALITY COMPLIANCE

A. Comply with applicable requirements of UL Std. 969, "Marking and Labeling Systems", pertaining to electrical identification systems.

B. Comply with applicable requirements of NEMA Std. No's WC-1 and WC-2 pertaining to identification of power and control conductors.

C. Comply with the latest National Electrical Code

PART 2 – PRODUCTS

2.01 GENERAL

A. Except as otherwise indicated, provide manufacturer's standard products of categories and types required for each application. Where more than single type is specified for an application, selection is Installer's option, but provide single selection for each application.

2.02 COLOR CODED CONDUIT MARKERS

A. Provide manufacturer's standard pre-printed, flexible, or semi-rigid, permanent, plastic-sheet conduit markers, extending 360 degrees around conduits; designed for attachment to conduit by adhesive, adhesive lap joint of marker, matching adhesive plastic tape at each end of marker, or pretensioned snap-on. Except as otherwise indicated, provide lettering that indicates voltage of conductor(s) in conduit. Provide 8" minimum length for 2" and smaller conduit, 12" length for larger conduit.

B. Unless otherwise indicated or required by governing regulations, provide white markers with black letters.

C. Conduit identification shall be via stainless-steel tags, and as required in these Specifications.

2.03 CABLE AND CONDUCTOR WIRE MARKERS

A. Cable and conductor wire markers shall be self-laminating vinyl on white background, printed using a Brady TLS2200 printer, Seton printer, or ENGINEER-approved equal. Handwritten wire markers are not acceptable.

2.04 SELF-ADHESIVE PLASTIC SIGNS

A. Provide manufacturer's standard, self-adhesive or pressure-sensitive, pre-printed, flexible vinyl signs for operational instructions or warnings; of sizes suitable for application areas and adequate for visibility, with proper wording for each application, e.g., 208V, EXHAUST FAN, RECTIFIER.

B. Unless otherwise indicated or required by governing regulations, provide white signs with black lettering.

C. Signs shall be attached with stainless-steel screws.

2.05 LETTERING AND GRAPHICS

A. Coordinate names, abbreviations and other designations used in electrical identification work, with corresponding designations shown, specified, or scheduled. Provide numbers, lettering and wording as indicated or, if not otherwise indicated, as recommended by manufacturers, or as required for proper identification and operation/maintenance of electrical systems and equipment. Comply with ANSI A13.1 pertaining to minimum sizes for letters and numbers.

PART 3 – EXECUTION

3.01 INSTALLATION

A. Install electrical identification products as indicated, in accordance with manufacturer's written instructions, and requirements of NEC.

B. Where identification is to be applied to surfaces that require finish, install identification after completion of painting.

C. Comply with governing regulations and requests of governing authorities for identification of electrical work.

3.02 CONDUIT IDENTIFICATION

A. Where electrical conduit is exposed in spaces with exposed mechanical piping that is identified by a color-coded method, apply color-coded identification on electrical conduit in a manner similar to piping identification. Except as otherwise indicated, use white as coded color for conduit.

3.03 CABLE/CONDUCTOR IDENTIFICATION

A. Apply cable/conductor identification, including voltage, phase, and feeder number, on each cable/conductor in each box/enclosure/cabinet where wires of more than one circuit or communication/signal system are present, except where another form of identification (such as color-coded conductors) is provided. Match identification with marking system used in panelboards, shop drawings, contract documents, and similar previously established identification for project's electrical work.

3.04 EQUIPMENT/SYSTEM IDENTIFICATION

A. Install engraved plastic-laminate sign on each major unit of electrical equipment in building; including central or master unit of each electrical system including communication-control-signal systems, unless unit is specified with its own self-explanatory identification or signal system. Except as otherwise indicated, provide single line of text, 1/2" high lettering on 1-1/2" high sign (2" high where 2 lines are required),

white lettering in black field. Provide text matching terminology and numbering of the contract documents and shop drawings. Provide signs for each unit of the following categories of electrical work:

1. Panelboards, electrical cabinets, and enclosures.
2. Access panel/doors to electrical facilities.
3. Major electrical switchgear.

B. Install signs at locations indicated or, where not otherwise indicated, at location for best convenience of viewing without interference with operation and maintenance of equipment. Secure to substrate with brass or stainless-steel screws, except use adhesive where screws should not or cannot penetrate the substrate.

C. Identification signs shall be black lettering on a white field to match the Districts' standard.

3.05 CIRCUIT IDENTIFICATION

A. The 3-phase wires shall be identified at the switchgear, panelboards and motor control centers as Phases A, B, and C. At 277/480V, Phase A shall be brown, Phase B shall be orange, and Phase C shall be yellow.

B. In addition to color coding all conductors, each conductor shall be identified in each pull box, manhole, panelboard, cable tray, or termination with circuit identification markers. This identification is applicable to all power, control, alarm, and instrumentation conductors and these markings shall be recorded on the Record Documents. Markers shall be slip-on PVC sleeve type as manufactured by Brady, Seton, or equal.

C. Markers for other cabling shall be B-292 vinyl as manufactured by Brady, Seton, or ENGINEER-approved equal.

D. Exposed medium voltage conduits shall be labeled at 50-foot intervals with f-inch letters stating the voltage - example - "12,470 volts". Labels shall be vinyl plastic as manufactured by Brady, Seton, or ENGINEER-approved equal.

3.06 AUTOMATIC EQUIPMENT WARNING SIGNS

A. Permanent warning signs shall be mounted at all mechanical equipment that may be started automatically or from remote locations. Signs shall be in accordance with OSHA regulations and shall be suitable for exterior use. The warning signs shall be fastened with round head brass screws or bolts, located, and mounted in a manner acceptable to the ENGINEER.

B. Warning signs shall be 7 inches high by 10 inches wide, colored yellow and black, on not less than 18 gauge vitreous enameling stock. Sign shall read:

CAUTION
THIS EQUIPMENT STARTS
AUTOMATICALLY
BY REMOTE CONTROL

3.07 HIGH VOLTAGE WARNING SIGNS

A. Permanent and conspicuous warning signs shall be mounted on all equipment, doorways to equipment rooms, pull boxes, manholes, where the voltage exceeds 600 volts.

B. Signs shall be in accordance with OSHA regulation, and shall be suitable for exterior use. The warning signs shall be fastened with round head brass screws or bolts, located, and mounted in a manner acceptable to the ENGINEER.

C. Signs shall be 7 inches high by 10 inches wide, colored red and white, on not less than 18 gauge vitreous enameling stock. Sign shall read:

WARNING
HIGH VOLTAGE
KEEP OUT

3.08 CONDUCTOR FASTENERS

A. Glue-on type conductor fasteners shall not be used in any panels, panelboards, switchboards, switchgear, motor control centers, or other enclosures containing electrical devices and/or conductors.

END OF SECTION

SECTION 26 0573 – OVERCURRENT PROTECTIVE DEVICE COORDINATION STUDY

PART 1 – GENERAL

1.01 DESCRIPTION

A. General:
1. CONTRACTOR shall provide a short circuit analysis and protective device coordination study for the project electrical power source and distribution system.
2. The short circuit and coordination study report shall provide an evaluation of the electrical power system with the model numbers and settings of the protective devices.

B. Scope:
1. Perform and provide a complete short circuit analysis with equipment interrupting or withstand rating evaluation and a protective device coordination study for the electrical power distribution system serving the facility.
2. Include all portions of the electrical power distribution system from the utility primary service drop through and including motor loads 50 HP and greater, loads 50 KVA and larger, and protective devices 100 amperes and larger.
3. Electrical equipment bus impedance shall be assumed to be zero. Short circuit momentary duties and interrupting duties shall be calculated on the basis of maximum available fault current at each project power source or power distribution equipment including switchgear, switchboard, motor control center, and branch circuit panelboards.
4. A protective device coordination study shall be performed to determine proper selection of power fuse ratings, protective relay characteristics and settings, ratios and characteristics of associated voltage and current transformers, and circuit breaker trip characteristics and settings.
5. The coordination study shall include all voltage classes of equipment from the utility's closest upstream protective device to existing and new equipment including switchgear, switchboards, motor control centers, and 120-volt panelboards main circuit protection.
6. Panelboard branch circuit devices need not be considered. The phase overcurrent and ground-fault protection shall be included, settings for the adjustable protective devices, and electrical metering and monitoring devices.
7. An equipment evaluation study shall be performed to determine the adequacy of existing or proposed electrical equipment by tabulating and comparing the short circuit ratings with the available fault currents.
8. Problem areas or inadequacies in the proposed equipment shall be identified in the report.

1.02 REFERENCES

A. This section contains references to the following documents and they are part of this section as specified and modified. In case of conflict between the requirements of this section and those of the listed documents, the requirements of this section shall prevail.

Reference	Title
IEEE 141	Practice for Electrical Power Distribution for Industrial Plants
IEEE 242	Practice for Protection and Coordination of Industrial and Commercial Power Systems

1.03 SUBMITTAL SCHEDULE

A. The report shall be submitted with the major electrical distribution equipment. and switchgear detailed product submittal.

B. The ENGINEER reviewed report shall be corrected, revised, and resubmitted as required. The report will be reviewed along with the electrical distribution and switchgear product submittal.

C. The CONTRACTOR shall distribute the ENGINEER accepted report to the major electrical distribution equipment and switchgear manufacturers before the electrical distribution equipment and switchgear is manufactured.

D. Provide an electronic copy, on USB Drive, of the protective device coordination study results as generated by the study software.

E. The report specified herein shall be provided in accordance with Contract Documents Specifications.

PART 2 – PRODUCTS

2.01 REPORT

A. The report shall be sealed and signed by the responsible electrical engineer, summarize the short circuit analysis, protective device coordination study, potential problem issues, conclusions, and recommendations that may affect the integrity of the project power distribution system. As a minimum, the report shall include the following.

1. The equipment manufacturer's information used to prepare the study.
2. Assumptions made during the study.
3. Short circuit calculations listing short circuit levels at each bus.
4. Simplified single line diagrams generated by the study software.
5. Coordination study time-current curves including the instrument transformer ratios, model numbers of the protective relays, relay settings, and trip unit settings associated with each breaker.
6. Comparison of short circuit duties of each bus to the withstand and interrupting capacity of the equipment protecting that bus.
7. Data used as input to the report including cable impedance, source impedance, equipment ratings, equipment time-current curves etc.

PART 3 – EXECUTION

3.01 GENERAL

A. Provide the short circuit analysis and the coordination study for the electrical power distribution system using SKM System Analysis, Inc. Power Tools, or equal.

B. The studies shall be performed in accordance with IEEE Standards 141 and 242 and shall utilize the ANSI; method of short circuit analysis in accordance with ANSI C37.010.

C. The studies shall be performed using actual equipment data for the new equipment. The analysis and study shall use the equipment and protective device data provided by the electrical distribution equipment manufacturer for the project.

3.02 SHORT CIRCUIT ANALYSIS

A. The short circuit analysis and report shall include the following:

1. One-Line Diagram:
    a. Location and function of each protective device in the system, such as relays, direct-acting trips, fuses, etc.
    b. Type designation, current rating, range or adjustment, manufacturer's style and catalog number for all protective devices.
    c. Power, voltage ratings, impedance, primary and secondary connections of all transformers.
    d. Type, manufacturer, and ratio of all instrument transformers energizing each

relay.

e. Sources of short circuit currents such as utility ties, generators, synchronous motors, and induction motors.

2. Impedance Diagram:
   a. Available MVA or impedance from the power utility company.
   b. Local generated capacity impedance.
   c. Bus impedance.
   d. Transformer and/or reactor impedance.
   e. Cable impedance.
   f. Equipment impedance.
   g. System voltages.
   h. Grounding scheme (resistance grounding, solid grounding, or no grounding).
3. Calculations:
   a. Determine the paths and situations where short circuit currents are the greatest.
   b. Assume bolted faults and calculate the 3-Phase and line-to-ground short circuits of each case.
   c. Calculate the maximum and minimum fault currents.

3.03 PROTECTIVE DEVICE COORDINATION STUDY

A. The time-current characteristics of the specified and indicated protective devices shall be plotted on 5-cycle, log-log graph paper with a maximum of eight protective devices per plot. The coordination study time-current plots shall, at a minimum, include the following:
   1. Time-current for each protective relay or fuse showing graphically that the settings will provide protection and selectivity within industry standards. Each curve shall be identified, and the tap and time settings shall be specified.
   2. Time-current curves for each device shall be positioned to provide for maximum selectivity to minimize system disturbances during fault clearing. Reasonable coordination intervals and separation of characteristic curves shall be maintained.
   3. Where selectivity cannot be achieved, the report shall indicate the cause and recommend alternative solutions. Time-current curves and points for cable and equipment damage and symmetrical and asymmetrical fault currents.
   4. Circuit interrupting device operating and interrupting times.
   5. Indicate maximum fault values on the graph.
   6. Sketch of bus and breaker arrangement.

3.04 STUDY FIRM

A. The report for the short circuit analysis and protective device coordination study indicating results shall be performed, stamped, and signed by an Electrical Engineer registered in the State where the Project is located.

B. The CONTRACTOR shall provide the ENGINEER with submittal information for the electrical products used for the Project.

C. The Electrical Engineer performing the study must visit the project site after equipment is installed and modify the study as required, and resubmit the study.

END OF SECTION

SECTION 26 0583 – WIRING CONNECTIONS

PART 1 – GENERAL

1.01 SCOPE OF WORK

A. This section covers terminal blocks for control and other wiring.

1.02 SUBMITTALS

A. Products shall be submitted in accordance with these Specifications and elsewhere in the Contract Documents prior to installation.

1.03 MANUFACTURERS

A. Terminal blocks shall be Entrelec, Phoenix Contact, Weidmuller, or ENGINEER-approved equal.

B. Surge protection blocks shall be TELEMATIC, series SD, or ENGINEER-approved equal.

C. Power distribution blocks shall be Ilsco Corporation, or ENGINEER-approved equal.

PART 2 – PRODUCTS

2.01 TERMINAL BLOCKS

A. Terminal blocks shall mount on standard DIN rail, and be of the size required for conductors therein. A minimum of 25 percent spares shall be provided in each terminal box. No more than 2 conductors shall be allowed per termination. Jumper bar assemblies shall be installed for interconnecting terminal blocks, distributing power and signal commons. Terminal blocks shall be UL-rated for 600 Volts, and 30 Amps, minimum.

B. Grounding terminal blocks shall be provided for instrumentation cable shields. The terminal blocks shall have distinctive 2-color bodies, and shall be mounted to the DIN rail with metal screw down type clamps, providing a positive ground connection. One grounding terminal block shall be installed for every 2 instrument cables terminated. Grounding terminal blocks shall be UL-rated for 600 Volts, and 20 Amps, minimum.

C. Terminal blocks shall be available in a variety of colors, including red, green, blue, gray, black, yellow, and orange.

D. DIN mount fuse holders shall have blown fuse indicators for DC and AC circuits. Fuse holders shall be of the compression clamp type. Fuse holders shall be UL listed, and rated for 600 Volts. Fuse sizes shall not exceed the UL current rating for the fuse holders.

E. DIN rail shall be pre-punched, zinc bichromate plated steel. Symmetrical DIN rail shall be 35mm X 7.5mm, minimum.

F. Terminal blocks for 4 to 20 milliamp signals shall have knife disconnect switches, and accessible test points for testing and measurement of current loop signals, without the need for removing wire terminations.

2.02 SURGE PROTECTION BLOCKS (SPB)

A. Analog inputs and outputs shall be terminated at surge protection blocks (SPB). The SPBs shall be designed for a working voltage of 32 volts, and shall be fused.

B. SPBs shall provide full hybrid line to line protection, and shall have a GDT rating of 10,000 A.

C. SPBs shall be UL94 V-2 listed.

2.03 POWER DISTRIBUTION BLOCKS (PDB)

A. PDBs shall be Electro tin-plated and manufactured from high strength 6061-T6 aluminum alloy.

B. PDBs shall be UL Recognized, rated 90°C, and CSA Certified.

C. PDBs shall provide flexibility in using the connector as an in-line splice or to reduce conductor size for taps.

D. PDBs shall be rated for 600 Volts and dual rated for Copper and Aluminum Conductors.

E. PDBs shall have the sizes and ratings as shown on the Plans.

PART 3 – EXECUTION

3.01 INSTALLATION

A. Each terminal block and fuse holder shall be identified with the circuit number, or conductor number, corresponding to the identification appearing on the shop Drawings for the equipment, or system.

B. Terminal block and fuse holder markers shall be computer printed plastic-type, with permanent markings.

C. End clamps and end sections shall be installed on each terminal block and fuse holder assembly.

D. Terminal blocks for DC voltages shall be blue, and AC voltages shall be gray**.**

END OF SECTION

SECTION 26 0916 – ELECTRICAL CONTROLS AND RELAYS

PART 1 – GENERAL

1.01 SCOPE OF WORK

A. This Section includes the following:
   1. Pushbutton and Selector Switches
   2. Relays
   3. Alarms
   4. Intrinsic Safety Barriers
   5. Wireways
   6. Watthour Transducers
   7. Elapsed Time Meters and Time Clocks

1.02 REFERENCES

A. NEMA ICS 1: General Standards for Industrial Control Systems.

B. NEMA ICS 2: Standards for Industrial Control Devices, Controllers and Assemblies.

C. NEMA ICS 6: Enclosures for Industrial Controls and Systems.

D. NEMA ST 1: Standard for Specialty Transformers (Except General purpose Type).

1.03 SUBMITTALS

A. Data: A complete list of equipment and material including manufacturer's descriptive data and technical literature, performance charts, catalog cuts and installation instructions, spare parts data for each different item of equipment specified. The data shall include a complete Bill of Materials.

B. Drawings: Containing complete wiring and schematic diagrams, control diagrams, and any other details required to demonstrate that the system has been coordinated and will properly function as a unit. Drawings shall show proposed layout, anchorage, support and appurtenances of equipment and equipment relationship to other parts of the work including clearances for maintenance and operations.

C. Submit shop drawings in accordance with the Contract Documents, and NEMA ICS 1 specifications indicating control panel layouts, wiring connections and diagrams, dimensions, support points.

1.04 PROJECT RECORD DOCUMENTS

A. Submit record documents in accordance with the Contract Documents.

B. Accurately record actual locations of control equipment. Revise diagrams included in Drawings to reflect actual control device connections.

1.05 OPERATION AND MAINTENANCE DATA

A. Submit operation data in accordance with the Contract Documents.

B. Include instructions for adjusting and resetting time delay relays, timers, and counters.

C. Submit maintenance data in accordance with the Contract Documents.

D. Include recommended preventative maintenance procedures and materials.

PART 2 – PRODUCTS

2.01 PUSHBUTTONS AND SELECTOR SWITCHES

A. Pushbuttons, pilot lights and selector switches shall be of the full size, heavy-duty industrial, oil tight, 120 volts, with interchangeable pilot lights, plug-in construction, double break silver contacts, chrome plated lock rings, with modular contacts, and NEMA rating equal to that of the enclosure on which devices are installed. All components shall be flush mounted on front of panel, unless otherwise noted.

B. Provide individual legend plates for indication of switch, pushbutton, and light function (e.g., Open, Closed, Hand-Off-Auto). A list shall be submitted for review and approval

C. Pilot lights shall be high intensity LED type. Pilot lights shall have clear lenses and LED lamps colored as shown on the Plans. Common, remote push-to-test circuitry shall be provided for each control panel to simultaneously test all indicating lights on the panel using a single pushbutton when there are 10 or more lights on the panel. Control panels with less than 10 lights shall utilize individual push-to-test lights and control circuitry.

D. Pushbuttons shall be maintained or momentary as required and as shown on the Drawings. Provide extended head pushbutton for all stop functions, mushroom head for emergency stop functions, and flush head pushbuttons for all other functions. Where indicated on the Drawings pushbuttons shall be illuminated type. Provide locking mechanism for all lock out functions. Selector switches shall have black knob operator, be maintained contact type unless noted otherwise, number and arrangement as required to perform intended functions specified but not less than one double pole, double throw, double break contact per switch. Contact rating shall be compatible with AC or DC throughput current of devices simultaneously operated by the switch contact but not less than 10 amperes resistive at 120 volts AC or DC continuous.

E. Potentiometers shall be provided with operators and resistive elements of the type and quantity indicated on the Drawings and as required with legend plates indicating percent of span.

F. The above devices shall be manufactured by Allen Bradley, General Electric, or ENGINEER-approved equal.

2.02 RELAYS

A. Timing relays shall be heavy duty, 120V AC, 10 amps, solid state design, poles as required per application, -10°C to +60°C, have timing repeatability of ±2.0% of setting, and be UL listed. The range shall be determined from the control descriptions and or schematic drawings. Provide mounting accessories, as required. The timing relays shall be manufactured by Allen Bradley, Cutler Hammer, or ENGINEER-approved equal.

B. Control relays shall be of the plug-in socket base type with dust-proof plastic enclosures, with silver-cadmium oxide contacts rated 120V AC, 10 amperes, with contact arrangement and operating coils of the proper voltage as required by the control circuit sequence. Relays shall have indicating lamp to show energized state. Each relay shall have a minimum of two double pole, double throw contacts, or as required. Control relays shall be Allen Bradley, Cutler Hammer, or ENGINEER-approved equal.

C. Alternating relays shall be UL listed, 120V AC, with contacts rated for 10 amperes at 120V AC, life expectancy of 100,000 operations, load indicating LEDs, and switch for load locking and load selecting options. Alternating relays shall be manufactured by TimeMark models 261, 271, and 471, and Diversified Electronics model ARA for duplex, triplex, and quadplex alternators, or ENGINEER-approved equal.

2.03 ALARMS

A. Audible alarms shall be UL listed, 120V AC, with solid state circuitry, vibrating horn, non-metallic corrosion resistant housing, with required mounting hardware, suitable for outdoor use capable of producing 100 dB at 10 feet. The audible alarm shall be manufactured by Federal Signal model 350, Edwards model 870-EX, or ENGINEER-approved equal.

B. Beacons for interior and/or exterior locations shall be rated NEMA 4X, flashing type (90 times per minute, minimum) with a red lens. Beacons shall be as manufactured by Federal Signal, Model 225XL, or ENGINEER-approved equal.

2.04 INTRINSIC SAFETY BARRIERS

A. Intrinsic safety barriers shall permit connection of devices located in a hazardous area to other devices located in a safe area. Intrinsic safety barriers shall be EMC compliant, 10 to 35V DC, 35 mA output current, hazardous area terminals identified by blue labels, terminals accommodating conductors up to 12 AWG, ambient temperature rating of -20°C to +60°C. The intrinsic safety barriers shall be manufactured by Allen-Bradley Bulletin 937, or ENGINEER-approved equal.

2.05 WIREWAYS

A. Wireways shall be PVC, snap-in slot design, with non-slip cover. Safe area wireways shall be light gray and marked "Safe Area Wiring." Hazardous area wireways shall be intrinsic blue and marked "Hazardous Area Wiring." The wireways shall be manufactured by Panduit Corporation, or ENGINEER-approved equal.

2.06 WATTHOUR TRANSDUCERS

A. Watthour transducers for active or reactive power shall be DIN rail and surface mount, single-phase or three-phase with balanced or unbalanced load, electrically isolated input and output signals, 4 to 20 mA output signal, 0-10 mA to 0-10 A input current, 0-10 V to 0-600 VAC input voltage, 16-500 Hz selectable frequency. The watthour transducers shall be manufactured by Sineax model PQ502, or ENGINEER-approved equal.

2.07 ELAPSED TIME METERS AND TIME CLOCKS

A. Elapsed time meters shall be self-powered, non-reset, solid state counter which provides silent, accurate and noise immune operation. Elapsed time meters shall require no external power, five-year minimum battery life, rated for 120V AC power, accessories for panel mounting, nameplate below LCD display reading "HOURS", liquid crystal display with 6 digits approximately 2 inches high with 50,000-hour minimum display life and indication of sufficient battery power. The elapsed time meters shall be manufactured by Durant, Automatic Timing and Controls, or ENGINEER-approved equal.

B. Time clocks shall be microprocessor based, have 24-hour time control, up to 24 operations per day, programmable from panel face keys, skip-a-day feature allowing schedule to be skipped for one to seven days, SPDT switch contact rated at 15 amps at 120V AC, with battery carryover to maintain time and program during power outage for 275 hours. The time clocks shall be manufactured by Tork, Paragon Electric Company, or ENGINEER-approved equal.

PART 3 – EXECUTION

3.01 INSTALLATION

A. Fasteners shall be type 316 stainless steel.

B. Install devices in strict accordance with NEC requirements and per manufacturers recommendation.

C. Coordinate with other trades as necessary during installation of these devices.

3.02 ACCEPTANCE

A. All installations are subject to evaluation in accordance with NEC requirements and manufacturers recommendations. CONTRACTOR shall remove the unacceptable work and correct work at no charge to OWNER.

END OF SECTION

SECTION 26 2200 – LOW VOLTAGE TRANSFORMERS

PART 1 – GENERAL

1.01 SCOPE OF WORK

A. This section covers dry type transformers used for low voltage, single and three phase, power distribution and lighting.

1.02 SUBMITTALS

A. Products shall be submitted in accordance with these Specifications and the Contract Documents prior to installation.

1.03 QUALITY ASSURANCE

A. IEEE C57.12.01, General Requirements for Dry-Type Distribution and Power Transformers

B. NEMA ST 20, Dry-Type Transformers for General Applications

C. UL 506, Standard for Specialty Transformers

PART 2 – PRODUCTS

2.01 DISTRIBUTION - LOW VOLTAGE LIGHTING AND POWER

D. Transformers shall be premium high efficiency quiet type, and shall be installed where indicated on the Plans. The primary winding of the transformers shall have two 2.5% taps above, and below normal.

E. The transformers shall have a BIL of 10 KV with a temperature class of 185°C for transformers up to 25 KVA, and a temperature class of 220°C for larger transformers.

F. The sound level shall not exceed 44 dBa measured at 5 feet from the transformer after installation. Core and coil assemblies 30 KVA and larger, shall be mounted on rubber vibration isolators, designed to reduce harmonics generated noise.

G. Transformers shall include primary and secondary circuit protection.

H. Transformers shall be types manufactured by Square-D, Eaton, ACME, or ENGINEER-approved equal.

2.02 FERRO RESONANT ISOLATION TRANSFORMERS

A. Ferro resonant isolation transformers shall be provided where indicated on the Plans. Regulation shall be +3 percent for an input range of +10 percent. Common mode noise rejection shall be better than 120 dB with transverse mode noise rejection better than 60 dB. Voltage spike attenuation shall be better than 250:1.

B. Isolation transformers shall be as manufactured by Shape Magnetronics, Control Concepts, Inc., or ENGINEER-approved equal.

C. Transformers 15 kVA and larger must meet the energy requirements of NEMA TP-1.

PART 3 - EXECUTION

3.01 INSTALLATION

A. Transformers shall be installed as indicated on the Plans, and in accordance with the manufacturer's instructions and recommendations. CONTRACTOR shall provide painted metal wall brackets, when required.

B. Grounding shall be provided per NEC, and these Specifications.

C. A sign with 2” high black letters on a white background shall indicate the exact (not the general) location of the transformer’s primary circuit disconnect switch.

END OF SECTION

SECTION 26 2413 – SWITCHBOARDS

PART 1 - GENERAL

1.01 SCOPE

A. The CONTRACTOR shall furnish and install, where indicated, a free-standing, dead-front type low-voltage distribution switchboard, utilizing group mounted circuit protective devices as specified herein, and as shown on the contract drawings.

1.02 REFERENCES

A. The low voltage distribution switchboards and all components shall be designed, manufactured and tested in accordance with the latest applicable following standards:
   1. NEMA PB-2
   2. UL Standard 891

1.03 SUBMITTALS

A. The following information shall be submitted to the ENGINEER for review:
   1. Master drawing index
   2. Front view elevation
   3. Floor plan
   4. Top view
   5. Single line
   6. Schematic diagram
   7. Nameplate schedule
   8. Component list
   9. Conduit entry/exit locations
   10. Assembly ratings including:
      a. Short-circuit rating
      b. Continuous current
      c. Voltage
   11. Major component ratings including:
      a. Voltage
      b. Continuous current
      c. Interrupting ratings
   12. Cable terminal sizes.
   13. Busway connection
   14. Connection details between close-coupled assemblies
   15. Composite floor plan of close-coupled assemblies
   16. Key interlock scheme drawing and sequence of operations.
   17. Calculation of flash protection boundary and require personal protective equipment

B. Submit copies of the following information for record purposes:
   1. Final as-built drawings and information for items listed in Section 01 3300 Submittal Procedures.
   2. Wiring diagrams
   3. Certified production test reports
   4. Installation information
   5. Seismic certification and equipment anchorage details

C. The CONTRACTOR or the equipment manufacturer shall determine and submit the calculation to the OWNER the Arc Flash Protection Boundary (FPB) and the recommended Personal Protective Equipment (PPE). Correct arch flash hazard labels shall be provided on all equipment.

1.04 QUALIFICATIONS

A. The manufacturer of the assembly shall be the manufacturer of the circuit protective devices within the assembly.

B. For the equipment specified herein, the manufacturer shall be ISO 9000, 9001, or 9002 certified.

C. The manufacturer of this equipment shall have produced similar electrical equipment for a minimum period of five (5) years. When requested by the ENGINEER, an acceptable list of installations with similar equipment shall be provided demonstrating compliance with this requirement.

1.05 REGULATORY REQUIREMENTS

A. The low-voltage switchboard shall be UL labeled.

1.06 DELIVERY, STORAGE AND HANDLING

A. Equipment shall be handled and stored in accordance with manufacturer's instructions. One (1) copy of these instructions shall be included with the equipment at time of shipment.

1.07 OPERATION AND MAINTENANCE MANUALS

A. Copies of the equipment operation and maintenance manuals shall be provided. Operation and maintenance manuals shall include the following information:
   1. Instruction books and/or leaflets
   2. Recommended renewal parts list
   3. Drawings and information required by section 1.04.

PART 2 - PRODUCTS

2.01 MANUFACTURERS

A. Cutler-Hammer

B. General Electric

C. ENGINEER-approved equal

2.02 RATINGS

A. The assembly shall be rated to withstand mechanical forces exerted during short-circuit rating as indicated on the Plans.

B. Voltage rating to be as indicated on the Plans.

2.03 CONSTRUCTION

A. Switchboard shall consist of the required number of vertical sections bolted together to form a rigid assembly. The sides and rear shall be covered with removable bolt-on covers. All edges of front covers or hinged front panels shall be formed. Provide adequate ventilation within the enclosure.

B. All sections of the switchboard shall be rear aligned with depth as shown on the drawings. All protective devices shall be group mounted. Devices shall be front removable and load connections front accessible enabling switchboard to be mounted against a wall.

C. The assembly shall be provided with adequate lifting means.

D. The switchboard shall be equal to Cutler-Hammer type Pow-R-Line C utilizing the components herein specified and as shown on the drawings.

E. The manufacturer shall determine and label the Flash Protection Boundary (FPB) and required Personal Protective Equipment (PPE).

2.04 BUS

A. All bus bars shall be silver-plated copper. Main horizontal bus bars shall be mounted with all three phases arranged in the same vertical plane. Bus sizing shall be based on NEMA standard current density of 1000 amps per square inch.

B. Provide a full capacity neutral bus where a neutral bus is indicated on the drawings.

C. A copper ground bus (minimum ¼-inch x 2 inches), shall be furnished firmly secured to each vertical section structure and shall extend the entire length of the switchboard.

D. All hardware used on conductors shall be high-tensile strength and zinc-plated. All bus joints shall be provided with conical spring type washers.

2.05 WIRING/TERMINATIONS

A. Small wiring, necessary fuse blocks and terminal blocks within the switchboard shall be furnished as required. Control components mounted within the assembly, such as fuse blocks, relays, pushbuttons, switches, etc., shall be suitably marked for identification corresponding to appropriate designations on manufacturers wiring diagrams. Wiring diagrams shall contain terminal and wire numbers.

B. Mechanical-type terminals shall be provided for all line and load terminations suitable for copper or aluminum cable rated for 75°C of the size as indicated on the Plans.

C. Lugs shall be provided in the incoming line section for connection of the main grounding conductor. Additional lugs for connection of other grounding conductors shall be provided as indicated on the Plans.

D. All control wire shall be type SIS, bundled and secured with nylon ties. Insulated locking spade terminals shall be provided for all control connections, except where saddle type terminals are provided integral to a device. All current transformer secondary leads shall first be connected to conveniently accessible short-circuit terminal blocks before connecting to any other device. All groups of control wires leaving the switchboard shall be provided with terminals blocks with suitable numbering strips. Provide wire markers at each end of all control wiring.

2.06 MOLDED CASE PROTECTIVE DEVICES

A. Main and feeder protective devices shall be molded case circuit breakers with inverse time and instantaneous tripping characteristics and shall have ground fault protection where indicated, or as required by NEC.

B. Circuit breakers shall be operated by a toggle-type handle and shall have a quick-make/quick-break over-center switching mechanism that is mechanically trip-free. Automatic tripping of the breaker shall be clearly indicated by the handle position. Contacts shall be non-welding silver alloy, and arc extinction shall be accomplished by means of DE-ION arc chutes. A push-to-trip button on the front of the circuit breaker shall provide a local manual means to exercise the trip mechanism.

C. Circuit breakers shall have a minimum symmetrical interrupting capacity as indicated on the Drawings.

D. Where indicated on the Drawings, circuit breakers shall be UL listed for series application.

E. Where indicated on the Drawings, circuit breakers shall be current limiting.

F. Circuit breakers 400 ampere frame and below shall be thermal-magnetic trip units and inverse time-current characteristics. Circuit breakers 600-ampere through 1200-ampere frame shall be microprocessor-based RMS sensing trip units. Circuit breakers 1600-ampere through 2500-ampere frame shall be microprocessor-based RMS sensing trip units.

G. On circuit breakers 800 amps and larger, a trip button and integral current reading display shall be provided

H. Where indicated, provide circuit breakers UL listed for application at 100% of their continuous ampere rating in their intended enclosure.

I. Provide Lamicoid labels for feeder circuit breakers that provide a descriptive name, as identified on the Drawings, of the load being served. Include circuit number and circuit breaker trip rating.

2.07 ACCESSORIES

A. Provide shunt trips, bell alarms and auxiliary switches as shown on the contract drawings.

B. Circuit Breaker Energy Monitoring.

C. Centralized Local Monitoring.

D. Provide transient voltage surge suppression as required in these Specifications and indicated on the Plans.

2.08 MISCELLANEOUS DEVICES

A. Key interlocks shall be provided as indicated on the Plans or required for safe equipment operation.

B. Control power transformers with primary and secondary protection shall be provided, as indicated on the Plans, or as required for proper operation of the equipment.

C. Each section of the switchboard shall be provided with a space heater, thermostatically controlled. Power for the space heaters shall be obtained from a control power transformer within the switchboard. Supply voltage shall be 120 volts AC.

2.09 ENCLOSURES

A. Indoor NEMA 1 Enclosure

B. Outdoor NEMA 3R Enclosure
   1. Outdoor enclosure shall be non-walk-in and meet applicable NEMA 3R UL requirements.
   2. Enclosure shall have flat roof sloping roof downward toward rear.
   3. Outer sections shall be the same widths as indoor structures, except each end of the outdoor assembly shall have an end trim.
   4. The enclosure shall be provided with bolt-on rear covers for each section.
   5. Doors shall have provisions for padlocking.
   6. Ventilating openings shall be provided complete with replaceable fiber glass air filters.
   7. Provide space heaters thermostatically controlled for each structure with adequate wattage to prevent the accumulation of moisture.
   8. Power for space heaters, lights and receptacles shall be obtained from a control power transformer within the switchboard. Supply voltage shall be 120 volts AC.

2.10 NAMEPLATES

A. Engraved nameplates, mounted on the face of the assembly, shall be furnished for all main and feeder circuits as indicated on the Plans. Nameplates shall be laminated plastic, black characters on white background. Characters shall be 1/2 inches high, minimum. Nameplates shall give item designation and circuit number as well as frame ampere size and appropriate trip rating. Furnish master nameplate giving switchboard designation, voltage ampere rating, short-circuit rating, manufacturer's name, general order number, and item number.

B. Control components mounted within the assembly, such as fuse blocks, relays, pushbuttons, switches, etc., shall be suitably marked for identification corresponding to appropriate designations on manufacturer's wiring diagrams.

2.11 FINISH

A. All exterior and interior steel surfaces of the switchboard shall be properly cleaned and provided with a rust-inhibiting phosphatized coating. Color and finish of the switchboard shall be ANSI 61 light gray.

PART 3 - EXECUTION

3.01 FACTORY TESTING

A. The following standard factory tests shall be performed on the equipment provided under this section. All tests shall be in accordance with the latest version of ANSI and NEMA standards.

1. The switchboard shall be completely assembled, wired, adjusted, and tested at the factory. After assembly, the complete switchboard will be tested for operation under simulated service conditions to assure the accuracy of the wiring and the functioning of all equipment. The main circuits shall be given a dielectric test of 2,200 volts for one (1) minute between live parts and ground, and between opposite polarities. The wiring and control circuits shall be given a dielectric test of 1,500 volts for one (1) minute between live parts and ground.

B. The manufacturer shall provide certified copies of factory test reports.

3.02 INSTALLATION

A. The CONTRACTOR shall install all equipment per the MANUFACTURER'S instructions, Contract Documents, and National Electrical Code.

B. The assembly shall be provided with adequate lifting means and shall be capable of being moved into installation position and bolted directly to the floor without the use of floor sills provided the floor is level to 1/8-inch per 3-foot distance in any direction. All necessary hardware to secure the assembly in place shall be provided by the CONTRACTOR.

3.03 FIELD INSPECTION AND TESTS

A. Provide the services of an authorized representative of the equipment manufacturer to make site visits to supervise the field testing and installation to be performed by the CONTRACTOR. The manufacturer’s representative shall state in writing that the equipment has been correctly installed and tested.

B. Perform the following minimum tests and checks before energizing equipment:

1. Megger terminals and busses for grounds after disconnecting devices sensitive to megger voltage.
2. Inspect all mechanical and electrical interlocks for proper operation.

C. Perform any other tests recommended by the equipment manufacturer and other tests as

described in this specification.

D. The manufacturer's representative shall supply results of all factory and field tests in writing for submittal to the ENGINEER.

E. The manufacturer shall supply test results to confirm that the assembly design has been tested to substantiate conformance with the applicable ANSI and NEMA Standards.

F. Touch-up paint all chips and scratches with manufacturer supplied paint and leave remaining paint with OWNER.

G. The CONTRACTOR shall perform field adjustments of the protective devices as required to place the equipment in final operating condition. Necessary field settings of devices, adjustments, and minor modifications to equipment to accomplish operational condition shall be carried out by the CONTRACTOR at no additional cost to the OWNER.

END OF SECTION

SECTION 26 2416 – PANELBOARDS

PART 1 – GENERAL

1.01 SCOPE OF WORK

A. This section covers electrical panelboards.

1.02 SUBMITTALS

A. Products shall be submitted in accordance with these Specifications and the Contract Documents prior to installation.

B. Panelboard submittal shall include:
1. Layout and dimensions with alphanumeric designation
2. Branch circuit breaker sizes and types
3. AIC rating
4. Bus sizes and ratings
5. Cable terminal sizes
6. Product sheets
7. Installation information
8. Seismic certification and equipment anchorage details

1.03 QUALITY ASSURANCE

A. NEMA PB-1, Panelboards

B. NEC

C. UL67, Panelboards

PART 2 – PRODUCTS

2.01 PANELBOARDS

A. Dead-front panelboards, including lighting distribution and control panels, shall be furnished and installed as indicated on the Plans. Buses shall be copper. Mounting and type of enclosures shall be as indicated on the Plans. Where not indicated, indoor enclosures shall be NEMA 12 and outdoor enclosures shall be NEMA 3R. The minimum interrupting capacity of any device shall be as indicated on the Plans.

B. Protective devices shall be replaceable without disturbing adjacent units. Wire connectors shall be suitable for wire sizes indicated. Branch circuits shall be numbered as indicated on the Plans, and a complete typed circuit schedule shall be furnished under a transparent cover, and affixed to the panel. Phase busing shall be full height without reduction. Full size neutral bars shall be included, and shall have suitable lug for each outgoing circuit requiring neutral connection. Spaces for future protective devices provided in lighting panels shall be bused for the maximum device that can be fitted into them.

C. Panelboards shall be finished with a primer, rust resistant phosphate undercoat and two coats of oven baked enamel with finish ANSI grey. Doors shall not uncover any live parts, and shall be hinged and have latches that require no tool to operate. Panelboard doors shall be lockable. Lock and two keys shall be furnished.

D. Each panelboard shall have, on the outside of the door, a lamicoid nameplate with ¾-inch letters as specified elsewhere in these Contract Documents.

E. Panelboards shall be manufactured by Cutler Hammer, General Electric, or ENGINEER-approved equal.

F. Panelboards shall be service entrance rated where required, and as shown on the Plans.

G. Panelboards shall be bolt-on type and provided with spare breakers as indicated on the Plans.

H. Panelboards shall include a typed circuit directory located inside the panel.

I. Surge Protective Devices (SPD)
   1. The SPD shall be per these Specifications.
   2. Surge Protective Devices (SPD) shall be designed to provide transient voltage protection for a service entrance panelboard.
   3. SPD shall be rated for the voltage and phase service of the panel at 120 kA per phase.

PART 3 – EXECUTION

3.01 INSTALLATION

A. Panelboards shall be installed as indicated on the plans and according to manufacturer's instructions.

B. Provide grounding per NEC and these Specifications.

C. CONTRACTOR shall verify all NEC clearance requirements prior to installation.

END OF SECTION

SECTION 26 2726 – WIRING DEVICES

PART 1 – GENERAL

1.01 SUMMARY

A. Section Includes:
   1. Light switches, receptacles, device plates, dimmers, plug-in strips, and tele-power poles.

1.02 QUALITY ASSURANCE

A. Device shall be UL-rated when applicable

1.03 SUBMITTALS

A. Shop Drawings: Refer to the Contract Documents and these Specifications.

PART 2 – PRODUCTS

2.01 ACCEPTABLE MANUFACTURERS

A. Subject to compliance with the Contract Documents, the following manufacturers are acceptable:
   1. Light switches (except explosion proof):
      a. Hubbell
      b. Slater
      c. P&S
      d. Arrow Hart
      e. General Electric
      f. Leviton
      g. Or ENGINEER-approved equal
   2. Explosion proof light switches:
      a. Crouse-Hinds
      b. Appleton Electric Co.
      c. Killark
      d. Or ENGINEER-approved equal
   3. Door switches:
      a. General Electric
      b. Slater
      c. P&S
      d. Arrow Hart
      e. Micro-switch
      f. Or ENGINEER-approved equal
   4. Receptacles (except explosion proof):
      a. Hubbell
      b. Slater
      c. P&S
      d. Arrow Hart
      e. General Electric
      f. Leviton
      g. Or ENGINEER-approved equal
   5. Explosion proof receptacles:
      a. Crouse-Hinds
      b. Appleton Electric Co.

c. Killark
d. Or ENGINEER-approved equal

6. Welding receptacles:
   a. Crouse-Hinds
   b. Appleton Electric Co.
   c. Or ENGINEER-approved equal
7. Tele-power poles:
   a. Wiremold
   b. Walker
   c. Or ENGINEER-approved equal
8. Dimmers:
   a. Lutron
   b. General Electric
   c. P&S
   d. Or ENGINEER-approved equal
9. Plug-in strip:
   a. Wiremold
   b. Walker
   c. Or ENGINEER-approved equal

2.02 MATERIALS

A. Light Switches for Unclassified Areas:
   1. Toggle type, quiet action, specification grade with grounding terminal
   2. Back and side wired
   3. Solid silver cadmium oxide contacts
   4. One-piece switch arm rated 20 A, 120/277 V AC
   5. UL listed
   6. Color: Ivory
   7. Wall plate: Type 304 stainless steel
   8. Type: As indicated on Drawings

B. Receptacles for Unclassified Areas:
   1. Straight blade, grounding type, specification grade
   2. Back and side wired with wrap-around bridge
   3. Rated 20 A, 125 V AC
   4. UL listed
   5. Color:
      a. For use on normal power: Ivory
      b. For use on UPS systems: Red
      c. For use on isolated ground systems: Orange
   6. Wall plate: Type 304 stainless steel
   7. Type: As indicated on Drawings

C. Light Switches for Wet Areas:
   1. Presswitch type, quiet action, specification grade, with grounding terminal
   2. Back and side wired
   3. Solid silver cadmium oxide contacts
   4. One-piece switch arm rated 20 A, 120/277 V AC
   5. UL listed
   6. Color: Ivory
   7. Wall plate: Gray weatherproof presswitch type
   8. Type: As indicated on Drawings

D. Receptacles for Wet Areas:
   1. Straight blade, grounding type, specification grade
   2. Back and side wired with wrap around bridge
   3. Rated 20 A, 125 V AC
   4. UL listed
   5. Color: Ivory
   6. Wall plate: Weatherproof, cast aluminum, UL listed, WDL open and closed
   7. Type: As indicated on Drawings

E. Ground Fault Circuit Interrupter Receptacles:
   1. Straight blade, grounding type, specification grade
   2. Rated 20 A, 125 V AC
   3. UL listed
   4. Test and reset buttons
   5. Wall plate: Indoor or weatherproof as required
   6. Feed-through type

F. Light Switches for Corrosive Areas:
   1. Corrosion-resistant NEMA 4X enclosure with switch consisting of:
      a. Fiberglass reinforced polyester enclosure
      b. Fiberglass reinforced polyester gasketed wall plate with built-in toggle lever switch with stainless steel shaft
      c. Grounding bushing
      d. Rated 20 A, 125 V AC
      e. UL listed
      f. Type: As indicated on Drawings
      g. Color: Yellow
   2. Optional: Corrosion-resistant enclosure and switch consisting of:
      a. Cast copper-free aluminum "FS" or "FD" ridge type hub box
      b. Toggle type, quiet action, specification grade with grounding terminal
      c. Rated 20 A, 125 V AC with solid silver cadmium oxide contacts
      d. UL listed
      e. Neoprene gasket
      f. Cast aluminum cover with stainless steel screws and lever to activate switch
      g. Type: As indicated on Drawings
      h. Color: Yellow

G. Receptacles for Corrosive Areas:
   1. Corrosion-resistant straight blade, grounding type, specification grade
   2. Back and side wired with wrap-around bridge
   3. Rated 20 A, 125 V AC
   4. UL listed
   5. Color: Yellow
   6. Box: "FS" or "FD" ridge type cast hub box of copper-free aluminum
   7. Gasket: Neoprene
   8. Wall plate: Weatherproof, cast aluminum, UL listed, WDL open or closed
   9. Type: As indicated on Drawings

H. Explosion proof Light Switches for Use in Hazardous Areas:
   1. Explosion proof, UL listed for Class I, Division 1 and 2, Groups B, C, and D; and Class II, Division 1 and 2 areas, Groups E, F, and G.
   2. EDS factory sealed
   3. Malleable iron body and cover

4. Aluminum sealing chamber
5. Front operated handle with stainless steel shaft
6. Rated 20 A, 125 V AC
7. With grounding screw
8. Type: As indicated on Drawings

I. Explosion proof Receptacles for Use in Hazardous Areas:
1. Explosion-proof, UL listed for Class I, Division 1 and 2, Groups B, C, and D; and Class II, Division 1 and 2, Groups F and G.
2. Factory-sealed malleable iron receptacle with spring-loaded cover
3. Malleable iron mounting box
4. Rated 20 A, 125 V AC
5. "Dead-front" construction requiring plug to be inserted and rotated to activate receptacle
6. Type: As indicated on Drawings.

J. Welding Receptacles: 60 A, 480 V, 3 pole, 4 wire, grounding type

K. Plug-In Strip: Surface steel raceway plug-in strip with single 15 A, 125 V, 3 wire grounding-type receptacles spaced 18 IN on center.
1. Prewired with two #12 TW and one #12 TW green insulated ground
2. Minimum 1-1/4 IN wide x 3/4 IN deep
3. Suitable fittings and snap-in cover
4. Finish:
   a. Stainless steel
5. Receptacle color:
   a. For use on normal power: Ivory
   b. For use on UPS systems: Red
   c. For use on isolated ground systems: Orange

PART 3 – EXECUTION

3.01 INSTALLATION

A. Mount devices where indicated on the Drawings and as scheduled in these Specifications.

B. Surface mount receptacles and light switches in concrete construction.

C. In masonry and metal stud construction, recess mount receptacles and light switches unless device precludes recessed mounting or unless otherwise noted on the Drawings.

D. Where more than one receptacle is installed in a room, they shall be symmetrically arranged.

E. Set switches and receptacles plumb and vertical to the floor.

F. Set recess-mounted switches and receptacles flush with face of walls.

G. Do not connect dimmers to loads in excess of 80 percent of the rating of the dimmer.

H. Provide blank plates for empty outlets.

END OF SECTION

SECTION 26 2733 – POWER DISTRIBUTION UNITS

PART 1 - GENERAL

1.01 DESCRIPTION

A. This Section outlines the electrical work for underground or overhead power service and power distribution.

B. Power Service: The underground or overhead service shall be complete and as shown on the Drawings. The service installation shall conform with the power company service requirements.

C. Distribution: The power distribution system shall include equipment installations and underground or overhead wiring installations as shown on the Drawings.

1.02 SUBMITTALS

A. Submit for the ENGINEER's approval material lists, shop drawings, factory test reports, and technical data to the extent required in these Specifications and contract documents.

PART 2 - PRODUCTS

2.01 GENERAL

A. Provide all the equipment and materials, and complete all of the power service, power distribution and grounding installations as indicated, specified and required. Sizes of equipment shown on the Drawings and space allowed for the equipment are based on equipment manufactured by only one of the listed acceptable manufacturers. The manufacturers and models listed in this Section of the Specifications are acceptable providing they conform to the Specifications and that the equipment and materials provided fit properly in the available space.

2.02 SERVICE EQUIPMENT

A. Provide the metal enclosed, service equipment as shown on the Drawings, and in accordance with the power company service requirements. The low voltage equipment shall be manufactured by Square D, Cutler Hammer, General Electric, Siemens, Allen Bradley, or ENGINEER-approved equal. Service equipment shall be part of the distribution panelboard as shown on the Drawings. All sections must meet Local Power Utility requirements.

B. Metering Section shall be full height, free standing and equipped with meter sockets, copper busses, main circuit breaker and ground fault protection as indicated. The meter sockets shall be provided for the power company self contained meter or meters that shall be connected to instrument transformers as required. Must meet Local Power Utility requirements.

C. Pull Section shall be totally metal enclosed, full height, free standing and equipped with copper buses and connectors for the underground service conductors. Must meet Local Power Utility requirements.

D. A main circuit breaker shall be used as a service disconnect in the service equipment as shown on the Drawings.

E. Nameplates shall be provided for the service equipment as required in these Specifications.

F. Double hasp shall be attached on a gasketed hinged door of outdoor equipment for two padlocks.

G. Grounding shall meet the requirements of these Specifications.

H. Service equipment shall be labeled with available fault current in accordance with NEC 110.24(a).

PART 3 - EXECUTION

3.01 GENERAL

A. Provide all the equipment installations and wiring installations including connections and interconnections for the power service and distribution as indicated, specified and required. Assure proper fits for all equipment and materials in the spaces shown on the Drawings.

B. Earthwork, Concrete and Painting: The required work for excavations, backfills, concrete and painting shall be provided for the electrical installations.
   1. Earthwork shall be performed for handholes, pull boxes, underground conduits, poles, guys, grounding, equipment foundations and supports as indicated and specified.
   2. Concrete shall be provided for electrical equipment foundations and supports, and conduit encasements as indicated and specified in these Specifications.
   3. Painting shall be provided for all installations having unfinished surfaces as specified in. Field damaged factory finishes on equipment shall be touched-up with paint that is equal in quality and color to the original factory finish.

C. Handholes and Pull Boxes: Precast concrete handholes and pull boxes shall be installed in excavations as shown on the Drawings and as required.
   1. Accessories shall be installed, which include pull eyes and required hardware.
   2. Covers shall be installed on all handholes and pull boxes.

D. Service Equipment: Install the metal enclosed service equipment and wiring as indicated, specified and required.
   1. Equipment shall be installed level and securely attached to the concrete foundation with anchor bolts. The sections shall be joined together with bolts, washers and nuts to form a unit assembly.
   2. Wiring installations shall be complete and in accordance with the power company service requirements.
   3. Nameplates shall be laminated plastic and attached to clean surfaces of the metal enclosures with an adhesive or equal.

E. Grounding: Install all the equipment, materials and wiring to complete the equipment, structural, lightning and system grounding installations as shown on the Drawings, specified and required.

F. Panelboards and Switchboards: Install the metal enclosed panelboards and distribution switchboards as indicated, specified and required.
   1. Equipment shall be installed level and securely attached to the concrete foundations, floors and walls with anchor bolts.
   2. Wiring installations shall be complete, including all connections.
   3. Nameplates shall be laminated plastic, and attached to clean surfaces of the metal enclosures with an adhesive.

G. Automatic Transfer Switch: The Automatic Transfer Switch described in Specification Section 26 3600 shall be supplied with the Service Entrance equipment.

H. Checking, Adjusting and Testing: Provide all checking, adjusting and testing operations on equipment and complete installations as specified in these Specifications.

END OF SECTION

SECTION 26 2813 – FUSES

PART 1 - GENERAL

1.01 SCOPE OF WORK

A. This section covers the requirements for protective fusing on this project. The CONTRACTOR shall furnish and install fuses and fuse holders per the Drawings and equipment manufacturers recommendations.

B. This specification includes the general requirements for various types of fuses whether they are shown on the Drawings or not. If fusing is required by codes or manufacturers recommendations, but not shown on the Drawings, this specification shall apply to the type of fusing provided by the CONTRACTOR.

C. Types of fuses specified in this section include the following:
   1. Class L time-delay
   2. Class L fast-acting
   3. Class RK1 time-delay
   4. Class RK1 and Class J current-limiting
   5. Class RK5 time-delay
   6. Class K5 time-delay, noncurrent-limiting
   7. Class T current-limiting

1.02 QUALITY ASSURANCE

A. The fuse manufacturer's facilities shall be ISO 9001 certified.

1.03 CODES AND STANDARDS

A. UL Compliance and Labeling: Comply with applicable provisions of UL 198D, "High-Interrupting-Capacity Class K Fuses". Provide over-current protective devices which are UL-listed and labeled.

B. NEC Compliance: Comply with NEC as applicable to construction and installation of fusible devices.

C. ANSI Compliance: Comply with applicable requirements of ANSI C97.1 "Low-Voltage Cartridge Fuses 600 Volts or Less".

1.04 SUBMITTALS

A. Product Data: Submit manufacturer's technical product data on fuses, including specifications, electrical characteristics, installation instructions, furnished specialties and accessories in accordance with these Specifications and the Contract Documents. In addition, include voltages and current ratings, interrupting ratings, current limitation ratings, time-current trip characteristic curves, and mounting requirements.

1.05 MANUFACTURERS

A. Subject to compliance with requirements, manufacturers offering fusible devices which may be incorporated in the work include, but are not limited to, the following: Bussmann, Gould-Shawmut, Reliance, or ENGINEER-approved equal.

PART 2 – PRODUCTS

2.01 GENERAL

A. Except as otherwise indicated, provide fuses of types, sizes, ratings, and average time-current and peak let-through current characteristics indicated, which comply with manufacturer's standard design, materials, and constructed in accordance with published

product information, and with industry standards and configurations.

2.02 CLASS L TIME-DELAY FUSES

A. Provide UL Class L time-delay fuses rated 600 volts, 60 Hz, with 200,000 RMS symmetrical interrupting current rating for protecting transformers, motors, and circuit-breakers.

2.03 CLASS L FAST-ACTING FUSES

A. Provide UL Class L fast-acting fuses rated 600 volts, 60 Hz, with 200,000 RMS symmetrical interrupting current rating for protecting service entrances and main feeder circuit-breakers.

2.04 CLASS RK1 TIME-DELAY FUSES

A. Provide UL Class RK1 time-delay fuses rated 600 volts, 60 Hz, with 200,000 RMS symmetrical interrupting current rating for protecting motors and circuit-breakers.

2.05 CLASS RK1 CURRENT-LIMITING FUSES

A. Provide UL Class RK1 current-limiting fuses rated 250 volts, 60 Hz, with 200,000 RMS symmetrical interrupting current rating for protecting circuit-breakers.

2.06 CLASS J CURRENT LIMITING FUSES

A. Provide UL Class J current-limiting fuses rated 600 volts, 60 Hz, with 200,000 RMS symmetrical interrupting current rating.

2.07 CLASS RK5 TIME-DELAY FUSES

A. Provide UL Class RK5 time-delay fuses rated 600 volts, 60 Hz, with 200,000 RMS symmetrical interrupting current rating for protecting motors.

2.08 CLASS K5 ONE-TIME FUSES

A. Provide UL Class K5 one-time fuses rated 250 volts, 60 Hz, with 100,000 RMS symmetrical interrupting current rating for protecting non-inductive loads.

2.09 CLASS T FUSES

A. Provide UL Class T fuses rated 600 volts, 60 Hz, with 200,000 RMS symmetrical interrupting current rating for protection of physically small devices.

PART 3 – EXECUTION

3.01 INSTALLATION

A. Fuse types and sizes shall be as indicated on the Plans. Fuses shall be installed in accordance with the National Electric Code (NEC) requirements and the manufacturer's written instructions.

B. Install fuses in proper fuse holders.

C. Where fuses are installed in the motor starters, fuses shall be sized to match the actual motor full load current.

D. Where fuses are installed in disconnect switches at HVAC units, the fuse sizes shall be sized to meet the HVAC manufacturer's requirements.

E. Fuses for control transformers shall be sized in accordance with the National Electrical Code.

F. Fuses shall be installed with the labels clearly visible.

3.02 FIELD QUALITY CONTROL

A. Prior to energizing fusible devices, test devices for circuit continuity and for short-circuits.

3.03 SPARE PARTS

B. Furnish 3 spare fuses of each size and type.

END OF SECTION

SECTION 26 2816 – ENCLOSED SWITCHES AND CIRCUIT BREAKERS

PART 1 – GENERAL

1.01 SCOPE OF WORK

A. The CONTRACTOR shall furnish and install, low voltage circuit breakers and enclosed disconnect switches, as indicated on the Drawings, and specified herein.

1.02 SUBMITTALS

A. Products shall be submitted in accordance with these Specifications and elsewhere in the Contract Documents prior to installation.

1.03 QUALITY ASSURANCE

A. The breaker manufacturer's facilities shall be ISO 9001 certified.

PART 2 – PRODUCTS

2.01 GENERAL

A. Circuit breakers shall be manufactured by Cutler-Hammer, Allen-Bradley, General Electric, or ENGINEER-approved equal.

B. Circuit breaker frame, trip, short circuit, and interruption ratings shall be as indicated on the Drawings, except that they shall be coordinated with the ratings of the equipment actually furnished, and shall be modified where necessary to suit the equipment. Circuit breakers to be used in motor control centers shall be as indicated on the Drawings. Where no indication of type is given on the Drawings circuit breakers protecting motors shall be motor circuit protectors, and other circuit breakers shall be molded case type.

C. Circuit breaker for mounting in motor control centers, or for separate mounting shall be of the air-break type, quick-make and quick-break, 600 volt, with number of poles as indicated on the Drawings.

D. Each pole of the circuit breaker shall provide inverse time delay, and instantaneous circuit protection.

E. The breakers shall be operated by a handle, and shall have a switching mechanism that is mechanically trip free from the handle, so that the contacts cannot be held closed against short circuits, and abnormal currents. Tripping due to overload, or short circuit shall be clearly indicated by the handle automatically assuming a position between the manual ON and OFF positions. Latch surfaces shall be ground and polished. Poles shall be constructed so that they open, close, and trip simultaneously.

F. Breakers must be completely enclosed in a molded case. Non-interchangeable trip breakers shall have their covers sealed; interchangeable trip breakers shall have the trip unit sealed to prevent tampering. Ampere ratings shall be clearly visible. Contacts shall be non-welding silver alloy. Arc extinction must be accomplished by means of arc chutes. The minimum interrupting ratings of the circuit breakers shall be at least equal to the available short circuit current at the line terminals.

G. Circuit breakers shall conform to the applicable requirements of NEMA Standards Publication No. AB1.

H. Molded case circuit breakers shall be ambient temperature compensating that provides inverse time delay overload and instantaneous short circuit protection by means of a thermal-magnetic element. Compensation shall be accomplished by a secondary bi-metal that will allow the breaker to carry rated current between 25°C and 50°C with tripping characteristics that are approximately the same throughout this temperature range.

I. On breakers with interchangeable, thermal, adjustable magnetic trip, the accessibility and position of the adjustment knob shall not be changed from those on the standard breaker.

J. Unless mounted in a switchboard, or panelboard, circuit breakers shall be housed in a NEMA rated enclosure as described elsewhere in these specifications.

K. Provide circuit breakers with shunt trip mechanisms where shown on the Drawings.

2.02 DISCONNECT SWITCHES

A. Disconnect switches shall be heavy-duty safety switches with a quick-make, quick-break operating mechanism, full cover interlock, and indicator handle. Disconnect switches shall be furnished with fuses of the size indicated on the Plans. One set of spare fuses shall be furnished for each fused disconnect switch. Disconnect switches shall be NEMA type HD heavy duty construction, UL 98 listed.

B. Enclosures shall be rated NEMA 12 for indoor use, NEMA 4X for corrosive areas and for outdoor use, unless otherwise indicated on the Plans.

C. Disconnect switch handle shall be padlockable.

D. Disconnect switches in corrosive areas as indicated on the Plans, shall be NEMA 4X, 316 stainless steel.

E. Disconnect switches shall be manufactured by Square D, Cutler Hammer, Allen-Bradley, General Electric, Eaton, or equal.

F. Disconnect switches for motors shall be rated for 125% of the motor HP or as indicated on the plans.

PART 3 – EXECUTION

3.01 INSTALLATION

A. Circuit breakers and disconnect switches shall be installed as indicated on the Drawings and per manufacturer's instructions.

END OF SECTION

SECTION 26 2913 – ENCLOSED MOTOR CONTROLLERS

PART 1 - GENERAL

1.01 SCOPE OF WORK

A. A motor controller is any device or group of devices normally used to start and stop a motor by making and breaking the motor circuit current. The motor controller and devices that make up the motor controller shall be governed by items indicated on the Plans, or elsewhere within these specifications.

B. Types of motor controllers specified in this section include the following:
   1. Combination.
   2. Fractional HP manual.
   3. Solid-state reduced voltage starter (SSS)

C. This section applies to motor controllers rated 480 V and below.

1.02 CODE AND STANDARDS

A. Electrical Code Compliance: Comply with applicable local electrical code requirements of the authority having jurisdiction and NEC Articles 220, 250, and 430, as applicable to installation, and construction of motor controllers.

B. NFPA Compliance: Comply with applicable requirements of NFPA 70E, "Standard for Electrical Safety in the Workplace."

C. UL Compliance: Comply with applicable requirements of UL 486A and B, and UL 508, pertaining to installation of motor controllers. Provide controllers and components which are UL-listed and labeled.

D. NEMA Compliance: Comply with applicable requirements of NEMA Standard ICS 2, "Controllers, Contactors and Overload Relays" and Pub No. 250, "Enclosures for Electrical Equipment (1000 Volts Maximum)," pertaining to motor controllers and enclosures.

1.03 MAINTENANCE DATA

A. Submit maintenance data and parts list for each motor controller and component; including troubleshooting maintenance guide. Also, provide product data and shop drawings in a maintenance manual, in accordance with requirements of these Specifications and the Contract Documents.

1.04 SUBMITTALS

A. Product Data: Submit manufacturer’s data and installation instructions on motor controllers.

B. Shop Drawings: Submit shop drawings of motor controllers showing accurately scaled equipment locations and spatial relationships to associated motors and equipment.

C. Wiring Diagrams: Submit power and control wiring diagrams for motor controllers showing connections to electrical power panels, feeders, and equipment.

D. Submittal documents shall be provided in accordance with these Specifications and other requirements of the Contract Documents.

PART 2 - PRODUCTS

2.01 GENERAL

A. Except as otherwise indicated, provide motor controllers and ancillary components that comply with manufacturer's standard materials, design, and construction in accordance with published product information, and as required for a complete installation.

2.02 ELECTRONIC OVERLOAD RELAYS

A. Electronic overload relays shall be provided with the motor starters. The overload relay shall be a 3-pole solid state device that monitors all 3 phases of the motor current. The unit shall detect overcurrent, phase current imbalance, phase loss, and trip after an adjustable time from 3 seconds to 30 seconds.

B. The overload relays shall be field selectable to Class 10, 20 or 30, ambient temperature compensated, and shall have an LED trip indicator. The unit shall have a manual and automatic reset feature, and a normally closed contact for control.

C. Each module shall provide individual trip indication and reset for each trip condition, visible without opening the distribution panelboard compartment door. Provide a normally open auxiliary contact for remote trip indication.

D. Solid state circuits shall be completely protected from damage arising from line transients and voltage spikes.

E. Electronic Overload Relays shall be as manufactured by Allen-Bradley, Cutler Hammer, General Electric, or ENGINEER-approved equal.

2.03 MAGNETIC MOTOR STARTERS

A. Starters, Size 2 and larger, shall have arc quenchers on all load breaking contacts. Starters shall be suitable for the horsepower ratings specified. The CONTRACTOR shall verify the motor ratings, and coordinate the starter and overload trip ratings with the actual horsepower ratings of the motors installed. Extended overload reset buttons shall be mounted so as to be accessible for operation without opening the door of the enclosure.

B. Magnetic contactors shall be factory adjusted and shall be chatter free. Overload relays shall be electronic, as specified herein.

C. Starters shall be furnished complete with a 120-volt secondary control power transformer. Control circuit fuses shall be furnished both on the primary and secondary of the control circuit transformer. If there is no transformer, all live control power supply wires shall be fused.

D. Starters shall be designed to operate in ambient temperatures up to 60 C.

E. The minimum size starter shall be NEMA Size 1.

F. Magnetic Motor Starters shall be manufactured by Allen-Bradley, Square D, Cutler Hammer, General Electric, or ENGINEER-approved equal.

2.04 MANUAL STARTERS

A. Manual starters shall be rated for the motor load, and shall be equipped with built-in overloads.

B. Manual starters shall be provided with enclosures as indicated on the Plans, lockable handles that clearly indicate ON, OFF, and TRIPPED positions, pilot light, and positive, quick-make, quick break mechanisms.

C. Manual Starters shall be manufactured by Allen-Bradley, Cutler Hammer, General Electric, or ENGINEER-approved equal.

2.05 MOTOR PHASE FAILURE RELAY

A. The relay shall detect voltage values below an adjustable value, loss of phase, and phase reversal. The unit shall automatically de-energize the control circuits of the motors to be protected, when one or all three phase voltages drop below the set point. The unit shall have a nominal trip delay time of two seconds and a reset time of two seconds. The relay shall automatically reset upon restoration of the line voltage. Relays shall be MotorSaver,

Time Mark Corporation, or ENGINEER-approved equal.

2.06 MOTOR PROTECTION RELAY

A. The motor protection relay shall be capable of the following as a minimum:
   1. Phase loss
   2. Low voltage (adjustable)
   3. Phase reversal
   4. Phase unbalance

B. The motor protection relay shall be equipped with the following as a minimum:
   1. Adjustable trip delay (2 to 20 seconds)
   2. Automatic reset
   3. Transient protection (2500 volts for 10 ms)

C. Motor protection relays shall be set during the project startup according to the individual motor characteristics and application parameters. The motor protection relays for the motors with variable frequency drives shall be set as to prevent low voltage tripping.

D. The motor protection relays shall be MotorSaver Model 350, Time Mark Model 264, or ENGINEER-approved equal.

2.07 SOLID STATE REDUCED VOLTAGE STARTER

A. Furnish and install a solid-state reduced voltage starter (SSS) to provide motor soft start and soft stop, where indicated on the Plans. The starter shall be capable of operating with any standard NEMA design motor of the specified horsepower. The unit shall be self-contained, house the logic board, power switches, heat sinks, motor overload protection, control power transformer, and applicable disconnect means in one enclosure.

B. Voltage rating to be 460V, 60Hz, 3 phase, +1- 20%.

C. SSS shall be supplied with a fused disconnect switch with the ability to be lockable in the open position.

D. Operating temperature shall be 0°C to 50°C, 5% to 95% relative humidity, non-condensing. De-rate 33% for each 10°C over 50°C to a maximum of 70°C.

E. Built in overload protection shall shut down and disable the starter until reset.

F. There shall be three pairs of inverse parallel SCRs. Each SCR shall be rated to block 2.5 times the nominal line to line voltage. The SCRs shall be sized to handle locked rotor current: 6 times full load current for 10 seconds on a cold start at 50°C.

G. The starter shall be installed as indicted on the Plans, and shall be supplied with properly sized input and bypass contactors, and controls as shown on the Plans.

H. Adjustments and indicators shall be accessible from a digital keypad with LCD panel. Indications shall include control power on, motor on, motor starting, overload, motor on bypass, and current.

I. Power poles and logic assemblies to be removable as one piece assemblies. One logic assembly shall work in any size unit of a given line voltage. The logic assembly shall be conformal coated. The gate drive circuit shall be optically coupled for noise immunity and long life. The logic assembly and SCRs shall be noise immune per NEMA showering arc test for solid-state contactors.

J. The soft start unit shall be capable of voltage or current control. The voltage limit shall be adjustable from 30% to 80% of line voltage and the current control shall be adjustable from 200% to 600% of FLA. In the voltage control mode, the ramp time shall be adjustable from 1 to 30 seconds, and the unit shall also have a soft stop feature.

K. The soft start shall have dry contact, form C, outputs available for internal faults, bypass contactor control, and run status.

L. Solid State reduced voltage starters shall be UL listed under UL508, and manufactured by Allen Bradley, Square D, Eaton, or ENGINEER-approved equal.

PART 3 - EXECUTION

3.01 INSTALLATION

A. Install motor controllers in accordance with equipment manufacturer's written instructions, and with recognized industry practices. Comply with applicable requirements of NEC, UL, and NEMA standards, to ensure that products fulfill requirements.

B. Tighten connectors and terminals, including screws and bolts, in accordance with equipment manufacturer's published torque values for equipment connectors. Where manufacturer's torque requirements are not indicated, tighten connectors and terminals to comply with tightening torques specified in UL Standards 486A and B, and the National Electrical Code.

C. Install fuses, of sizes indicated, in each fusible disconnect switch, if any. The type and sizes of the fuses for SSS must be per the manufacturer’s recommendation.

D. Prior to energizing motor controller equipment, check with ground resistance tester, phase-to phase and phase-to-ground insulation resistance levels to ensure requirements are fulfilled.

E. Prior to energizing, check circuitry for electrical continuity.

F. Check rotation of each motor for proper direction.

G. Upon completion of installation of motor controller equipment and electrical circuitry, energize controller circuitry and demonstrate functioning of equipment in accordance with requirements. Where possible, correct malfunctioning units at site, then retest to demonstrate compliance; otherwise, remove and replace with new units, and retest to demonstrate compliance.

END OF SECTION

SECTION 26 3213 – GENERATOR SET - DIESEL

PART 1 – GENERAL

1.01 SCOPE

A. Provide complete factory assembled generator set equipment with digital (microprocessor-based) electronic generator set controls, digital governor, and digital voltage regulator, as well as additional equipment as included in the project drawings.

B. Provide factory test, startup by a supplier authorized by the equipment manufacturer(s), and on-site testing of the system.

C. The generator set manufacturer shall warrant all equipment provided under this section, whether or not it is manufactured by the generator set manufacturer, so that there is one source for warranty and product service. Technicians specifically trained and certified by the manufacturer to support the product and employed by the generator set supplier shall service the generator sets.

D. The generator set supplier shall be responsible for complete compliance to all specification requirements for the entire on-site power supply system, including generator set.

E. Prototype testing, factory testing, site testing.

1.02 CODES AND STANDARDS

A. The generator set installation and on-site testing shall conform to the requirements of the following codes and standards, as applicable. The generator set shall include necessary features to meet the requirements of these standards.

1. ANSI S1.13 – Measurement of Sound Pressure Levels in Air
2. CSA 282, Emergency Electrical Power Supply for Buildings
3. IEEE446 – Recommended Practice for Emergency and Standby Power Systems for Commercial and Industrial Applications
4. NFPA 30 – Flammable and Combustible Liquids
5. NFPA 37 – Standard for the Installation and Use of Stationary Combustion Engines and Gas Turbines
6. NFPA 70 – National Electrical Code. Equipment shall be suitable for use in systems in compliance to Article 700, 701, and 702.
7. NFPA 99 – Essential Electrical Systems for Health Care Facilities
8. NFPA 110 – Emergency and Standby Power Systems. The generator set shall meet all requirements for Level 1 systems. Level 1 prototype tests required by this standard shall have been performed on a complete and functional unit, component level type tests will not substitute for this requirement.
9. IBC Certified for the jobsite installation requirements, and IBC 2000, 2003, 2006, 2009, and 2012.

B. The generator set and supplied accessories shall meet the requirements of the following standards:

1. NEMA MG1-1998 part 32. Alternator shall comply with the requirements of this standard.
2. UL1236 – Battery Chargers
3. UL2200. The generator set shall be listed to UL2200 or submit to an independent third-party certification process to verify compliance as installed.

C. The control system for the generator set shall comply with the following requirements.
   1. EN50082-2, Electromagnetic Compatibility – Generic Immunity Requirements, Part 2: Industrial.
   2. EN55011, Limits and Methods of Measurement of Radio Interference Characteristics of Industrial, Scientific and Medical Equipment.
   3. FCC Part 15, Subpart B.
   4. IEC8528 part 4. Control Systems for Generator Sets

D. The generator set manufacturer shall be certified to ISO 9001 International Quality Standard and shall have third party certification verifying quality assurance in design/development, production, installation, and service, in accordance with ISO 9001.

1.03 ACCEPTABLE MANUFACTURERS

A. Equipment specifications for this project are based on microprocessor-based generator sets manufactured by Caterpillar, Cummins or ENGINEER-approved equal. Equipment by other suppliers that meets the requirement of this specification are acceptable, if approved. Proposals must include a line by line compliance statement based on this specification. Modifications to the design resulting from equal equipment not specified shall be the responsibility of the Contractor.

1.04 SUBMITTALS

A. Shop drawings shall be submitted as specified in these Specifications and include the following:
   1. Installation Instructions
   2. Outline drawings of assembly
   3. One-line diagrams and wiring diagrams for assembly and components
   4. Interconnection wiring diagrams
   5. Submit names, experience level, training certifications, and locations for technicians that will be responsible for servicing equipment at this site.

B. Product data:
   1. Technical data on all major components. Technical data must include an alternator thermal damage curve, description and operating characteristics of the alternator protection device demonstrating alternator protection, and an alternator reactive capability curve.
   2. Certification of the emissions performance of the generator set engine by the engine manufacturer
   3. Seismic certification, demonstrating compliance to local requirement
   4. Sound test data, based on a free field requirement.
   5. Submit statement of compliance which states the proposed product is certified to the emission standards required by the location for EPA, stationary emergency application.

C. Project information:
   1. Test reports and certifications
   2. Factory test procedures

D. Contract closeout information:
   1. Operating and maintenance data

1.05 QUALIFICATIONS

A. The generation set manufacturer shall be certified to ISO 9001 International Quality Standard and shall have third party certification verifying quality assurance in design/development, production, installation, and service, in accordance with ISO 9001.

B. The manufacturer of this equipment shall have produced similar equipment for a minimum period of ten years. When requested by the Engineer, an acceptable list of installations with similar equipment shall be provided demonstrating compliance with this requirement.

1.06 REGULATORY REQUIREMENTS

A. The generator set shall be UL2200 listed and labeled.

B. The generator set overcurrent protection shall be UL listed as a utility grade protective device under UL category NRGU or CSA equivalent.

C. The generator set engine shall be EPA certified, in compliance with the codes and regulations of the local Air Quality Management District (AQMD), and shall comply will all applicable emissions standards at the date of installation, or per the requirements of the Air District Permit, whichever governs.

1.07 WARRANTY

A. The manufacturer shall warrant the material and workmanship of the generator set for a minimum of two (2) years from registered commissioning and start-up.

B. The warranty shall be comprehensive. No deductibles shall be allowed for travel time, service hours, repair parts cost, etc. shall be allowed during the minimum noted warranty period described in paragraph A above.

PART 2 – PRODUCTS

2.01 GENERATOR SET

A. Ratings

1. The generator set shall operate at a voltage of 480/277V, 3-Phase, 4-wire, 60 Hz.
2. The complete generator set shall be rated per ISO8528 at 125 KW at 0.8 PF standby rating, based on site conditions of: Altitude of 700 feet, max ambient temperature of 120°F, and relative humidity of 0-30 percent.
3. The generator set rating shall be based on emergency/standby service and marked as such per NFPA110.

B. Performance

1. Voltage regulation shall not exceed one percent for any constant load between no load and rated load for both parallel and non-parallel applications. Random voltage variation with any steady load from no load to full load shall not exceed plus or minus 0.5 percent.
2. Frequency regulation shall be isochronous from steady state no load to steady state rated load. Random frequency variation with any steady load from no load to full load shall not exceed plus or minus 0.25%.
3. Generator sets shall be designed to allow operation at full rated load in an ambient temperature under site conditions, based on highest ambient condition. Ambient temperature shall be as measured at the air inlet to the generator set for enclosed generator sets, and at the control of the generator set for machines installed in equipment rooms.
4. The engine-generator set shall be capable of single step load pick up of 100% nameplate kW and power factor, less applicable derating factors, with the engine-generator set at operating temperature.
5. The generator shall be capable of sustaining line to neutral short circuit 300% of the rated current for 10 seconds without externally mounted devices.

6. The alternator shall produce a clean AC voltage waveform, with not more than 5% total harmonic distortion at full linear load, when measured from line to neutral, and with not more than 3% in any single harmonic, and no 3rd order harmonics or their multiples. Telephone influence factor shall be less than 40.
7. The generator set shall be certified by the engine manufacturer to be suitable for use at the installed location and rating, and shall meet all applicable exhaust emission requirements.
8. The generator set shall be tested by the manufacturer per ANSI S1.13. Data documenting performance shall be provided with submittal documentation.

C. Construction
1. The engine-generator set shall be mounted on a heavy-duty steel base to maintain alignment between components.
2. All switches, lamps, and meters in the control system shall be oil-tight and dust-tight. There shall be no exposed points in the control (with the door open) that operate in excess of 50 volts.
3. Rigging Information: Indicate location of each lifting attachment, generator-set center of gravity, and total package weight in submittal drawings

D. Connections
1. The generator set load connections shall be composed of silver or tin plated copper bus bars, drilled to accept mechanical or compression terminations of the number and type as shown on the drawings. Sufficient lug space shall be provided for use with cables of the number and size as shown on the drawings.
2. Power connections to auxiliary devices shall be made at the devices, with required protection located at a wall-mounted common distribution panel.
3. Generator set control interfaces to other system components shall be made on a common, permanently labeled terminal block assembly.

2.02 ENGINE AND ENGINE EQUIPMENT

A. The engine shall be diesel, radiator and fan cooled. Minimum displacement and number of cylinders shall be the same or greater than the equivalent rated unit by the manufacturer specified in Section 1.03. The horsepower rating of the engine at its minimum tolerance level shall be sufficient to drive the alternator and all connected accessories. Two cycle engines are not acceptable. Engine accessories and features shall include:
1. An electronic governor system shall provide automatic isochronous frequency regulation. The governing system dynamic capabilities shall be controlled as a function of engine coolant temperature to provide fast, stable operation at varying engine operating temperature conditions. The control system shall actively control the fuel rate and excitation as appropriate to the state of the generator set. Fuel rate shall be regulated as a function of starting, accelerating to start disconnect speed, accelerating to rated speed, and operating in various isochronous states.
2. Skid-mounted radiator and cooling system rated for full load operation in 40°C ambient as measured at the generator air inlet, based on 0.5 in H2O external static head. Radiator shall be sized based on a core temperature which is 10°C higher than the rated operation temperature, or prototype tested to verify cooling performance of the engine/radiator/fan operation in a controlled environment. Radiator shall be provided with a duct adapter flange. The cooling system shall be filled with a 50/50-ethylene glycol/water mixture by the equipment manufacturer. Rotating parts shall be guarded against accidental contact.
3. Electric starter capable of three complete cranking cycles without overheating.
4. Positive displacement, mechanical, full pressure, lubrication oil pump.

5. Full flow lubrication oil filters with replaceable spin-on canister elements and dipstick oil level indicator.
6. Diesel engines shall include an engine driven, mechanical, positive displacement fuel pump and fuel filter(s) with replaceable spin-on canister element(s). Fuel cooler, suitable for operation of the generator set at full rated load in the ambient temperature specified shall be provided if required for operation due to the design of the engine and the installation.
7. Replaceable dry element air cleaner with restriction indicator.
8. Flexible supply and return fuel lines.
9. Engine mounted battery charging alternator, 35-ampere minimum, and solid-state voltage regulator.

B. Coolant heater
1. Engine mounted, thermostatically controlled, coolant heater(s) for each engine. Heater voltage shall be as shown on the project drawings. The coolant heater shall be UL499 listed and labeled.
2. The coolant heater shall be installed on the engine with SAEJ20 compliant materials. Steel tubing shall be used for connections into the engine coolant system wherever the length of pipe run exceeds 12 inches. The coolant heater installation shall be specifically designed to provide proper venting of the system. The coolant heaters shall be installed using isolation valves to isolate the heater for replacement of the heater element.
3. The coolant heater shall be provided with a 24VDC thermostat, installed at the engine thermostat housing. An AC power connection shall be provided for a single AC power connection to the coolant heater system.
4. The coolant heater(s) shall be sized as recommended by the engine manufacturer to warm the engine to a minimum of 40°C in a 15°C ambient, as a minimum, or the temperature required for starting and load pickup requirements of this specification.

C. Provide vibration isolators, spring type, EQ Certified, rating and quantity as recommended by the generator set manufacturer to be compatible with genset manufacturers CBC Seismic Certification. Isolators shall include seismic restraints as required by site location.

D. Starting and Control Batteries shall be lead acid type, 24 volt DC, sized as recommended by the engine manufacturer for compliance to NFPA110 starting requirements, complete with battery cables, connectors, and rack.

E. Provide flex connection for engine of size and type as recommended by the generator set manufacturer and connect to existing exhaust silencer. Utilize existing exhaust system installed in the facility by others according to the engine manufacturer's recommendations and applicable codes and standards.

F. Provide fully regulated, constant voltage, current limited, battery charger for each battery bank charger. The chargers shall be designed for heavy-duty industrial service, primarily to quickly recharge and maintain batteries that start internal combustion engines. Charger shall be rated a minimum of 10 amps, and be capable of operating in parallel with another like charger for reliability and added charging capacity.
1. Charger shall provide 4 distinct charge states: "dead battery", "bulk charge", "absorption", and "float". Charge rate shall be temperature compensated to provide proper charging in ambient conditions from –20°C to +55°C.
2. Provider LED indication of general charger condition, including charging, fault, and equalize. Provide a 2-line LCD display to indicate charge rate, battery voltage, faults, and provide for charger set up. Charger shall provide relay contacts for fault conditions as required by NFPA110.

3. The charger shall operate properly during fault conditions, including battery disconnection while charging, reversed battery polarity connections, and shorted battery.
4. The charger shall be compliant to the same RFI/EMI and voltage surge performance as are specified for the genset control.

2.03 LOW VOLTAGE AC ALTERNATOR

A. The AC alternator shall be; synchronous, four pole, 2/3 pitch, brushless, revolving field, drip-proof construction, single pre-lubricated sealed bearing, air cooled by a direct drive centrifugal blower fan, and directly connected to the engine with flexible drive disc. The alternator design shall prevent shaft current from flowing and eliminate the need for insulated bearings. All insulation system components shall meet NEMA MG1 requirements for Class H insulation systems. Actual temperature rise measured by resistance method at full load shall not exceed 125ºC in a 40°C ambient. Alternator shall be provided with protection to prevent damage due to any external fault or overload condition, including short circuit, ground fault, or overload.

B. The alternator shall be capable of delivering rated output (kVA) at rated frequency and power factor, at any voltage up to 5 percent above or below rated voltage.

C. The alternator shall be supplied with a dedicated, independent power source for the voltage regulation system, which provides sufficient excitation for the alternator to supply 300% of rated output current for 10 seconds.

D. The subtransient reactance of the alternator shall not exceed 12 percent based on the standby rating of the generator set.

E. Provide an anti-condensation heater for the alternator for generator sets installed outdoors or in unheated environments or in coastal environments.

2.04 GENERATOR SET CONTROL AND PROTECTION

A. Generator
1. The generator set shall be provided with a microprocessor-based control system that is designed to provide automatic starting, monitoring, protection, and control functions for the generator set. The control system shall also be designed to allow local monitoring and control of the generator set, and remote monitoring and control as described in this specification.
2. The generator set shall be supplied with a disconnecting means sized per the Plans and supplied by the generator manufacturer. Disconnecting means shall be lockable in the open position in accordance with NEC 445.18(A).
3. The control shall be mounted on the generator set. The control shall be vibration isolated and prototype tested to verify the durability of all components in the system under the vibration conditions encountered.
4. The generator set mounted control shall include the following features and functions:

B. Circuit Breaker
1. The generator shall be equipped with a circuit breaker from the manufacturer. The circuit breaker's type, size, and rating shall be per the manufacturer’s recommendations. The generator shall be protected per the NFPA 70 requirements.

C. Control Switches
1. Mode Select Switch. The mode select switch shall initiate the following control modes. When in the RUN or Manual position the generator set shall start, and accelerate to rated speed and voltage as directed by the operator. In the OFF position the generator set shall immediately stop, bypassing all time delays. In the AUTO position the generator set shall be ready to accept a signal from a remote device to start and accelerate to rated speed and voltage.

2. EMERGENCY STOP switch. Switch shall be Red "mushroom-head" push-button. Depressing the emergency stop switch shall cause the generator set to immediately shut down, and be locked out from automatic restarting. The switch shall include a lockout provision for use in safely disabling the generator set for necessary service.
3. RESET switch. The RESET switch shall be used to clear a fault and allow restarting the generator set after it has shut down for any fault condition.
4. PANEL LAMP switch. Operating the panel lamp switch shall cause the entire panel to be lighted with DC control power. The panel lamps shall automatically be switched off 10 minutes after the switch is operated, or after the switch is operated a second time.

D. Generator Set AC Output Metering. The generator set shall be provided with a metering set including the following features and functions:
1. Analog voltmeter, ammeter, frequency meter, and kilowatt (KW) meter. Voltmeter and ammeter shall display all three phases. Ammeter and KW meter scales shall be color coded in the following fashion: readings from 0-90% of generator set standby rating: green; readings from 90%-100% of standby rating: amber; readings in excess of 100%: red.
2. Digital metering set, 0.5% accuracy, to indicate generator RMS voltage and current, frequency, output current, output KW, KW-hours, and power factor. Generator output voltage shall be available in line-to-line and line-to-neutral voltages, and shall display all three phase voltages (line to neutral or line to line) simultaneously.
3. Both analog and digital metering are required. The analog and digital metering equipment shall be driven by a single microprocessor, to provide consistent readings and performance.

E. Generator Set Alarm and Status Display.
1. The generator set shall be provided with alarm and status indicating lamps to indicate non-automatic generator status, and existing warning and shutdown conditions. The lamps shall be high-intensity LED type. The lamp condition shall be clearly apparent under bright room lighting conditions. The generator set control shall indicate the existence of all alarm, shutdown, and status conditions associated with the generator set, including all paralleling control functions and the engine ECM on an alphanumerical display on the genset. The following alarm, shutdown, and status conditions are required, as a minimum:

Low Oil Pressure	Alarm
Low Oil Pressure	Shutdown
Oil Pressure Sender Failure	Alarm
Low Coolant Temperature	Alarm
High Coolant Temperature	Alarm
High Coolant Temperature	Shutdown
Engine Temperature Sender Failure	Alarm
Low Coolant Level	Alarm or shutdown-selectable
Fail to Crank	Shutdown
Fail to Start/Over-crank	Shutdown
Overspeed	Shutdown
Low DC Voltage	Alarm
High DC Voltage	Alarm
Weak Battery	Alarm
Low Fuel-Day tank	Alarm

High AC Voltage	Shutdown
Low AC Voltage	Shutdown
Under Frequency	Shutdown
Over Current	Shutdown
Over Current	Shutdown
Short Circuit	Shutdown
Over Load	Alarm
Emergency Stop	Shutdown

2. The generator set control shall annunciate all alarm and shutdown conditions from the engine electronic control.
3. Provisions shall be made for indication of four customer-specified alarm or shutdown conditions. Labeling of the customer-specified alarm or shutdown conditions shall be of the same type and quality as the above specified conditions. The non-automatic indicating lamp shall be red, and shall flash to indicate that the generator set is not able to automatically respond to a command to start from a remote location.

F. Engine Status Monitoring.
1. The following information shall be available from a digital status panel on the generator set control:
   Engine Oil Pressure (psi or KPA)
   Engine Coolant Temperature (Degrees F or C)
   Engine Oil Temperature (Degrees F or C)
   Engine Speed (RPM)
   Number of Hours of Operation (Hours)
   Number of Start Attempts
   Battery Voltage (DC Volts)
2. The control system shall also incorporate a data logging and display provision to allow logging of a minimum of the last 20 warning or shutdown indications on the generator set, the time of the last fault of each type, and the number of faults of each type, and total time of operation at various loads as a percent of the standby rating of the generator set.

G. Engine Control Functions.
1. The control system provided shall include a cycle cranking system, which allows for user selected crank time, rest time, and # of cycles. Initial settings shall be for 3 cranking periods of 15 seconds each, with 15-second rest period between cranking periods.
2. The control system shall include an engine governor control, which functions to provide steady state frequency regulation as noted elsewhere in this specification. The governor control shall include adjustments for gain, damping, and a ramping function to control engine speed and limit exhaust smoke while the unit is starting. The governor control shall be suitable for use in paralleling applications without component changes.
3. The control system shall include time delay start (adjustable 0-300 seconds) and time delay stop (adjustable 0-600 seconds) functions.
4. The control system shall include sender failure monitoring logic for oil pressure and engine temperature, which is capable of discriminating between failed sender or wiring components, and an actual failure condition.

5. The control system shall include all interfaces necessary for proper operation with the paralleling equipment provided under this contract.

H. Alternator Control Functions:

1. The generator set shall include a full wave rectified automatic digital voltage regulation system that is matched and prototype tested by the engine manufacturer with the governing system provided. It shall be immune from mis-operation due to load-induced voltage waveform distortion and provide a pulse width modulated output to the alternator exciter. The voltage regulation system shall be equipped with three-phase line to neutral RMS sensing and shall control buildup of AC generator voltage to provide a linear rise and limit overshoot. The system shall include a torque-matching characteristic, which shall reduce output voltage in proportion to frequency below an adjustable frequency threshold. Torque matching characteristic shall be adjustable for roll-off frequency and rate, and be capable of being curve-matched to the engine torque curve with adjustments in the field. The voltage regulator shall include adjustments for gain, damping, and frequency roll-off. Adjustments shall be broad range, and made via digital raise-lower switches, with an alphanumeric LED readout to indicate setting level. Rotary potentiometers for system adjustments are not acceptable.
2. Controls shall be provided to monitor the output current of the generator set and initiate an alarm (over current warning) when load current exceeds 110% of the rated current of the generator set on any phase for more than 60 seconds.
3. Controls shall be provided to individually monitor all three phases of the output current for 1-, 2-, or 3-phase short circuit conditions. The control/protection system shall monitor the current level and voltage. The controls shall shut down and lock out the generator set when output current level approaches the thermal damage point of the alternator (short circuit shutdown). This function shall be provided by equipment which is listed under UL category NRGU, or equivalent equipment that is CSA listed for applications installed in Canada.
4. Controls shall be provided to monitor the KW load on the generator set, and initiate an alarm condition (over load) when total load on the generator set exceeds the generator set rating for in excess of 5 seconds. Controls shall include a load shed control, to operate a set of dry contacts (for use in shedding customer load devices) when the generator set is overloaded.
5. An AC over/under voltage monitoring system that responds only to true RMS voltage conditions shall be provided. The system shall initiate shutdown of the generator set when alternator output voltage exceeds 110% of the operator-set voltage level for more than 10 seconds, or with no intentional delay when voltage exceeds 130%. Under voltage shutdown shall occur when the output voltage of the alternator is less than 85% for more than 10 seconds.
6. A battery monitoring system shall be provided which initiates alarms when the DC control and starting voltage is less than 16 VDC or more than 32 VDC (24 VDC nominal) or less than 8 VDC or more than 16 VDC (12VDC nominal). During engine cranking (starter engaged), the low voltage limit shall be disabled, and if DC voltage drops to less than 14.4 volts for more than two seconds a "weak battery" alarm shall be initiated.

I. The generator set shall be provided with a network communication module to allow real time communication with the generator set control by remote devices. The control shall communicate all engine and alternator data; alarm, shutdown, and status conditions; and allow starting and stopping of the generator set via the network in both test and emergency modes.

J. Control Interfaces for Remote Monitoring:

1. No field connections for control devices shall be made in the AC power output enclosure. Provide the following features in the control system:
2. Form "C" dry contact set rated 2A @ 30 VDC to indicate existence of any alarm or shutdown condition on the generator set.
3. One set of contacts rated 2A @ 30 VDC to indicate generator set is ready to load. The contacts shall operate when voltage and frequency are greater than 90% of rated condition.
4. A fused 10 amp switched 24 VDC power supply circuit shall be provided for customer use. DC power shall be available from this circuit whenever the generator set is running.
5. A fused 20 amp 24 VDC power supply circuit shall be provided for customer use. DC power shall be available from this circuit at all times from the engine starting/control batteries.
6. The control shall be provided with a direct serial communication link for the communication network interface as described elsewhere in this specification and shown on the drawings.

2.05 SOUND/WEATHER ENCLOSURE

A. The complete diesel engine generator set, including generator control panel, engine starting batteries and fuel oil tank, shall be enclosed in a factory assembled, sound attenuated enclosure mounted on the integral sub-base fuel tank. The sound attenuated enclosure shall be weather resistant to withstand outdoor exposure.

B. A sound attenuated enclosure of steel with electrostatically applied powder coated baked polyester paint. It shall consist of a roof, side walls, and end walls. Fasteners shall be either zinc plated or stainless steel. Handles shall be key lockable, all doors keyed alike, and hinges shall be zinc die cast or stainless steel. Access doors shall be hinged and can be lifted off after opening 90 degrees. Intake openings shall be screened to prevent the entrance of rodents or pests.

C. The sound enclosure shall meet Level III requirements listed below, unless noted otherwise on the plans (as measured at a distance of 7 meters).
Level I – Generator operates at 70 to 89 d(B)A
Level II – Generator operates at 63 to 78 d(B)A
Level III – Generator operates at 68 to 72 d(B)A

2.06 SUBBASE FUEL TANK

A. The package shall include a sub base fuel tank with a minimum of 12 hours of fuel storage while operating at full load. The fuel tank shall be constructed of heavy gauge welded steel and shall be double walled with a sealed, separately vented, integral fuel containment basin.

B. The fuel tank shall include a low fuel level switch and a leak detection rupture basin switch. The fuel tank shall be UL 142 listed, ULC-S601-07 listed and NFPA 37 compliant

C. The package shall include the manufacturer’s standard accessory kit.

PART 3 - EXECUTION

3.01 PROTOTYPE TESTING

A. Submit evidence of prototype testing; manufacturer’s certificate, etc.

3.02 SUBMITTALS

A. For equals, within 10 days after award of contract, provide six sets of the following information for review:

1. Manufacturer’s product literature and performance data, sufficient to verify compliance to specification requirements.
2. A paragraph by paragraph specification compliance statement, describing the differences between the specified and the proposed equipment.
3. Manufacturer's certification of prototype testing.
4. Manufacturer's published warranty documents.
5. Shop drawings showing plan and elevation views with certified overall dimensions, as well as wiring interconnection details.
6. Interconnection wiring diagrams showing all external connections required; with field wiring terminals marked in a consistent point to point manner.
7. Manufacturer’s installation instructions.

3.03 FACTORY TESTING

A. The generator set manufacturer shall perform a complete operational test on the generator set prior to shipping from the factory. A certified test report shall be provided. All testing shall be performed with calibrated metering.

B. Generator set factory tests on the equipment shall be performed at rated load and rated power factor, as well as 1.0 power factor. Generator sets that have not been factory tested at rated power factor will not be acceptable. Tests shall include: run at full load, maximum power, voltage regulation, transient and steady-state governing, single step load pickup, and function of safety shutdowns.

C. A certified test report shall be provided documenting the results of these tests.

3.04 INSTALLATION

A. Equipment shall be installed by the contractor in accordance with final submittals and contract documents. Installation shall comply with applicable state and local codes as required by the authority having jurisdiction. Install equipment in accordance with manufacturer's instructions and instructions included in the listing or labeling of UL listed products.

B. Installation of equipment shall include furnishing and installing all interconnecting wiring between all major equipment provided for the on-site power system. The contractor shall also perform interconnecting wiring between equipment sections (when required), under the supervision of the equipment supplier.

C. Equipment shall be installed on concrete housekeeping pads or as indicated in the plans. Equipment shall be permanently fastened to the pad in accordance with manufacturer’s instructions and seismic requirements of the site.

D. Equipment shall be initially started and operated by representatives of the manufacturer. All protective settings shall be adjusted as instructed by the consulting engineer.

E. All equipment shall be physically inspected for damage. Scratches and other installation damage shall be repaired prior to final system testing. Equipment shall be thoroughly cleaned to remove all dirt and construction debris prior to initial operation and final testing of the system.

F. On completion of the installation by the electrical contractor, the generator set supplier shall conduct a site evaluation to verify that the equipment is installed per manufacturer’s recommended practice.

3.1 ON-SITE ACCEPTANCE TEST

A. The complete installation shall be tested to verify compliance with the performance requirements of this specification following completion of all site work. Testing shall be conducted by representatives of the manufacturer, with required fuel supplied by

Contractor. The Engineer shall be notified in advance and shall have the option to witness the tests. The generator set manufacturer shall provide a site test specification covering the entire system. Tests shall include:

B. Prior to start of active testing, all field connections for wiring, power conductors, and bus bar connections shall be checked for proper tightening torque.

C. Installation acceptance tests to be conducted on-site shall include a "cold start" test, a two hour full load (resistive) test, and a one-step rated load pickup test in accordance with NFPA 110. Provide a resistive load bank and make temporary connections for full load test, if necessary.

D. Perform a power failure test on the entire installed system. This test shall be conducted by opening the power supply from the utility service, and observing proper operation of the system for at least 2 hours. Coordinate timing and obtain approval for start of test with site personnel.

3.05 TRAINING

A. The equipment supplier shall provide training for the facility operating personnel covering operation and maintenance of the equipment provided. The training program shall be not less than 4 hours in duration and the class size shall be limited to 5 persons. Training date shall be coordinated with the facility owner.

3.06 SERVICE AND SUPPORT

A. The generator set supplier shall maintain service parts inventory for the entire power system at a central location which is accessible to the service location 24 hours per day, 365 days per year. The inventory shall have a commercial value of $3 million or more. The manufacturer of the generator set shall maintain a central parts inventory to support the supplier, covering all the major components of the power system, including engines, alternators, control systems, paralleling electronics, and power transfer equipment.

B. The generator set shall be serviced by a local service organization that is trained and factory certified in generator set service. The supplier shall maintain an inventory of critical power system replacement parts in the local service location. Service vehicles shall be stocked with critical replacement parts. The service organization shall be on call 24 hours per day, 365 days per year. The service organization shall be physically located within 40 miles of the site.

C. The manufacturer shall maintain model and serial number records of each generator set provided for at least 20 years.

END OF SECTION

SECTION 26 3353 – STATIC UNINTERRUPTIBLE POWER SUPPLY

PART 1 - GENERAL

1.01 SCOPE OF WORK

A. This section covers the requirements for uninterruptable power supplies (UPSs) to be provided as shown on the Plans.

1.02 SUBMITTALS

A. Products shall be submitted in accordance with these Specifications and the Contract Documents prior to installation.

1.03 REFERENCES

A. National Electrical Code (NEC) Article 250

PART 2 - PRODUCTS

2.01 GENERAL REQUIREMENTS

A. The UPS equipment shall be manufactured by Powerware, or equal.

B. The UPS shall be sized for a minimum of 30 minutes of backup power for its rated load. The rated load shall be equal to or greater than the connected load.

C. The UPS shall be a line-interactive type, consisting of a ferroresonant or linear transformer, battery charger, batteries, inverter, and microprocessor control. The batteries shall be maintenance free, premium type.

D. The UPS shall pass lightning and surge protection ANSI/IEEE C62.41 standards, Category A and B. The UPS shall be UL 1449 listed.

E. The output waveform shall be a pure sine-wave with less than 5% total harmonic distortion on the inverter.

F. The UPS shall have a digital display for load-dependent runtime, volts in, volts out, battery voltage, percent loading, and alarm codes.

G. The UPS shall operate between 0 and 50°C, at a minimum of 95% efficiency on-line.

PART 3 - EXECUTION

3.01 INSTALLATION

A. Install the UPS equipment in accordance with the manufacturers' recommendations.

B. The UPS shall be provided with a 2-year parts and factory service warranty.

END OF SECTION

SECTION 26 3600 – AUTOMATIC TRANSFER

PART 1 – GENERAL

1.01 SCOPE OF WORK

A. Automatic transfer switch shall be furnished and installed, as indicated on the Drawings, with full load current and voltage ratings as indicated on the Drawings. The switch shall be capable of switching all classes of load, and shall be rated for continuous duty when installed in a non-ventilated enclosure. Withstand current rating shall be as indicated on the Drawings.

1.02 SUBMITTALS

A. CONTRACTOR shall submit shop drawings, manufacturer's data sheets, and a complete wiring diagram detailing all connections to the electrical system in accordance with these Specifications and other requirements of the Contract Documents.

PART 2 – PRODUCTS

2.01 AUTOMATIC TRANSFER SWITCH

A. The automatic transfer switch shall be of the time delay neutral, delayed transition, break-before-make type. The automatic transfer switch shall have the following capabilities:
   1. Adjustable time delay for generator start
   2. Adjustable time delay transfer to generator
   3. Adjustable time delay in "off" position
   4. Re-transfer to normal power position inhibit
   5. Adjustable time delay for generator stop
   6. The switches shall be capable of transferring successfully in either direction with 70 percent of rated voltage applied to the terminals.

B. The normal and standby contacts shall be positively interlocked mechanically and electrically to prevent simultaneous closing. Main contacts shall be mechanically locked in position in both the normal and standby positions without the use of hooks, latches, or magnets, and shall be silver alloy protected by arcing contacts, with magnetic blowouts on each pole. Parallel main contacts are not acceptable.

C. The transfer switch shall be equipped with a manual operator that is designed to prevent injury to personnel if the electrical operator should become energized during manual transfer.

D. The transfer switch, complete with all accessories, shall be listed by UL. Transfer switches installed outdoors shall be rated NEMA 3R unless noted otherwise in Plans. Transfer switches installed indoors shall be rated NEMA 1 unless noted otherwise in Plans.

E. The transfer switch shall be compatible with the standby generator, and shall be supplied with the generator.

F. The transfer switch operation shall be selectable by the Operator. In Manual mode, the Operator shall be able to transfer the load to the generator using a selector, toggle, or pushbutton switch. In Automatic mode, the internal logic shall sense loss or presence of utility power, and transfer the load to or from the generator.

G. Transfer switches shall be manufactured by CAT, ASCO, Zenith, Russelectric, or ENGINEER-approved equal.

2.02 ACCESSORIES

A. The transfer switch shall be equipped with the following:
   1. Nominal 0.5 to 6 second time delay to override momentary outages.
   2. Field adjustable 0 to 31 minutes time delay to retransfer to normal source with 5-minute unloaded running time of standby plant. A switch shall be provided to bypass this feature with transfer to normal source made manually. Time delay shall be nullified if standby power fails and normal power is available.
   3. Differential protection on 3 phases. Dropout and pickup.
   4. Test switch.
   5. Auxiliary contacts which close in normal position. Two sets of Form C contacts shall be provided.
   6. Auxiliary contacts which close with normal power available. Two sets of Form C contacts shall be provided.
   7. Auxiliary contacts which close in standby position. Two sets of Form C contacts shall be provided.
   8. Auxiliary contacts which close with standby power available. Two sets of Form C contacts shall be provided.
   9. Pilot lights: indicating normal and standby switch position.
   10. Manual and automatic selector switch.
   11. Manual and automatic pilot lights with push-to-test.

PART 3 – EXECUTION

3.01 INSTALLATION

A. Transfer switch shall be installed, in accordance with the manufacturer's recommendations.

3.02 MANUFACTURER TESTING

A. When conducting temperature rise tests in accordance with UL, the manufacturer shall include post-endurance temperature rise tests to verify the ability of the switches to carry full rated current after completing the overload and endurance tests.

B. On completion of the installation, start-up shall be performed by a factory-trained service representative in the presence of the OWNER and the ENGINEER.

3.03 TESTING AND TRAINING

A. Testing and training for this equipment shall be provided in accordance with the Contract Documents. Installation and performance testing shall be conducted as part of the standby generator tests.

B. Four (4) hours of training shall be provided for the OWNER's Operations and Maintenance Staff. Training shall be certified on forms provided in the Contract Documents. Training shall cover theory of operation, features and functions available, normal operation, troubleshooting, and routine maintenance. The CONTRACTOR shall submit a syllabus for the training session for approval, within 3 weeks of conducting the class. Provide each attendee with a class syllabus detailing each topic to be discussed.

END OF SECTION

SECTION 26 4100 – FACILITY LIGHTNING PROTECTION

PART 1 - GENERAL

1.01 SUMMARY

A. Section Includes: Air terminals, interconnecting conductors, grounding, and bonding for lightning protection.

1.02 SYSTEM DESCRIPTION

A. Description: Conductor system protecting Treatment Building.

1.03 SUBMITTALS

A. Shop Drawings: Indicate layout of air terminals, grounding electrodes, and bonding connections to structure and other metal objects. Include terminal, electrode, and conductor sizes, and connection and termination details.

B. Product Data: Show dimensions and materials of each component, and include indication of listing according to UL 96

C. Test Reports: Indicate procedures and results for specified factory and field testing and inspection.

D. Manufacturer's Certificate: Products meet or exceed specified requirements.

E. Certificate of Compliance: From AHJ/inspector indicating approval of lightning protection systems.

1.04 CLOSEOUT SUBMITTALS

A. Project Record Documents: Record actual locations of air terminals, grounding electrodes, bonding connections, and routing of system conductors.

1.05 QUALITY ASSURANCE

A. Perform Work according to NFPA 780.

B. Perform Work according to UL 96A.

C. Perform Work according to LPI-175.

D. Manufacturer: Company specializing in lightning protection equipment with three years' experience and member of Lightning Protection Institute.

E. Installer: Authorized installer of manufacturer with three years' experience.

F. Inspection Agency: UL Lightning Protection Institute, Inc. (LPI) Electrical Testing Laboratories, Inc., or ENGINEER-approved equal.

1.06 FIELD MEASUREMENTS

A. Verify field measurements prior to fabrication, and indicate on Shop Drawings.

1.07 COORDINATION

A. Coordinate Work with roofing and exterior and interior finish installations.

PART 2 - PRODUCTS

2.01 COMPONENTS

A. Manufacturers:
   1. ABB, Eaton, Erico or ENGINEER-approved equal

B. Product Listing:
   1. UL 96.

C. Air Terminals:
   1. Material: Copper.
   2. Configuration: Solid.
   3. Use adhesive base for single-ply roof installations.
   4. Air Terminal for Chimney: Lead-coated copper.
   5. Decorations: Ball.
   6. Grounding Rods: Solid copper.
   7. Ground Plate: Copper.
   8. Conductors:
      Material: Copper.
      Configuration: Cable.

D. Connectors and Splicers: Bronze

PART 3 - EXECUTION

3.01 INSTALLATION

A. Install according to NFPA 780, UL 96A, and LPI-175.

B. Connect conductors using exothermic welding process. Protect adjacent construction elements and finishes from damage.

C. Conceal interior conductors within building finishes. Conceal exterior conductors where practical.

D. Bond exterior metal bodies on building to lightning protection system.

3.02 FIELD QUALITY CONTROL

A. Perform inspection and testing according to UL 96A.

END OF SECTION

SECTION 26 4313 – SURGE PROTECTIVE DEVICES FOR LOW-VOLTAGE ELECTRICAL POWER CIRCUITS

PART 1 - GENERAL

1.01 APPLICABLE STANDARDS AND TESTING

A. UL 1449 – Surge Protective Devices

B. UL 1283 – Electromagnetic Interference Filters

C. UL 67 – Panelboards (UL 67 listing for internal panelboard SPD)

D. NEC 2020 – (NEC Article 242 SPD Installation practice/NEC Article 250.53 Grounding)

E. NFPA 78 – Guide on Electrical Inspections

F. ISO 9001:2015 – Quality standard

G. IEEE C62.41.1 and C62.41.2 - (System shall be designed to meet American National Standards Institute/Institute of Electrical and Electronic Engineering Inc. C62.41)

H. IEEE C62.45 2002. – (System shall be tested to meet the C62.45)

I. Category A & B – (0.5 μSEC x 100 kHz Ring Wave)

J. Category B3 Biwave – (8 x 20 μSEC at 3,000 Amperes and 1.2 x 50 μSEC at 6,000 Volts)

K. Category C3 Biwave – (8 x 20 μSEC at 10,000 Amperes and 1.2 x 50 μSEC at 20,000 Volts)

L. The fusing elements must be capable of allowing the SPD's rated single impulse current to pass through the SPD at least one time without failure. The system shall be tested to 1,000 sequential ANSI/IEEE C62.41.1 and C62.41.2 Category C3 combination wave transients. The Category C3 combination wave is defined as a 1.2 x 50 microsecond wave at 20,000-volt open circuit voltage waveform and 8 x 20 microsecond wave at 10,000-ampere short circuit current waveform. In addition, the system components shall be tested repetitively 1,000 times testing based on an IEEE C62.33 (MOV test) and C62.35 (SAD test) without failure or degradation exceeding ±10%.

M. CBEMA (ITIC) and IEC - (Computer Business Equipment Manufacturers Association or Information Technology Industry Council and International Electrotechnical Commission define clamping voltage tolerance guidelines for sensitive equipment)

1.02 SUBMITTALS

A. Must have approval fifteen days prior to bidding on project. Request for submittal must be in writing with the following items.

B. Drawings: Electrical and mechanical drawings shall be provided by the manufacturer which show unit dimensions, weights, mounting provisions, connection notes, wire size and wiring diagram.

C. Equipment Manual: The manufacturer shall furnish an installation manual with installation notes, start-up, and operating instructions for the specified system. Installation instructions shall clearly state whether the system requires an external overcurrent device to maintain the system's UL 1449 listing.

D. National Electrical Code (NEC) 242 - Installation requirements for SPD.
   1. Section 242.8, An SPD shall be a listed device (UL 1449).
   2. Section 242.10, SPD shall be marked with a short-circuit current rating and shall not be installed at a point on the system (ex. service, distribution, or branch panels) where the available fault current (AIC rating) is in excess of that rating.

E. UL 1449 stipulation for fused SPD - The manufacturer's authorized representative is required to submit the following:
   1. Certify that the SPD system is UL 1449 listed (UL Card).
   2. Indicate the type of internal or external fusing that is incorporated in the SPD system and what impact the fusing has on the performance of the device with respect to surge capacity and clamping levels.

F. CBEMA (ITIC) & IEC - SVRS must meet voltage tolerance guidelines:
   1. SVR clamp levels for wye and single phase (L-N, L-G and N-G):
      a. 400-600V for 120V systems, 800-1200V for 277V systems and 1200-1500V for 347V systems
   2. SVR clamp levels for delta circuits (L-L and L-G):
      a. 1000-1200V for 240V systems, 1500-1800V for 480V systems and 1800-2000V for 600V systems

PART 2 - PRODUCTS

2.01 SERVICE ENTRANCE/SWITCHBOARD/SWITCHGEAR

A. Acceptable Manufacturers:
   1. Current Technology
   2. LEA International Inc.
   3. Liebert
   4. Phoenix Contact
   5. General Electric
   6. OR ENGINEER-approved equal

B. Equipment shall be a multi-stage parallel protector rated for 277/480VAC, 3 PHASE, 4 WIRE, plus ground. The equipment's minimum surge current capacity shall be 400 kA per phase (L-N plus L-G) and 200 kA per mode (L-N, L-G, L-L and N-G).

C. The system protection modules shall contain a technology that utilizes a symmetrical array of balanced metal oxide varistors (MOV). Each MOV will be individually coordinated to pass UL 1449.

D. All primary transient paths shall utilize copper wire, copper bus bar and lugs of equivalent capacity to provide equal impedance interconnection between phases. No plug-in module or components shall be used in surge carrying paths.

E. Each protection module shall have a visual indicator that signifies that the protection circuitry is on line. The unit shall not be taken off line to verify integrity of system. Redundant status indicators shall be mounted on the front of the door that monitors the system protection circuitry.

F. The system shall be modular with field replaceable modules. Modular units shall contain a minimum of one module per phase.

G. Each protection module shall have a capacitive filtering system connected in each Line to Neutral (L→N)(Wye) mode or Line to Line (L→L)(Delta) mode to provide EMI/RFI noise attenuation (UL 1283).

H. Protection modes: The SPD shall provide Line to Neutral (L→N)(Wye), Line to Ground (L→G)(Wye or Delta), Line to Line (L→L)(Delta) and Neutral to Ground (N→G)(Wye) protection.

I. Service Conditions: Rate surge protective device for continuous operation under the following conditions, unless otherwise indicated:
   1. MCOV: Maximum Continuous Operating Voltage of 125% or greater
   2. Operating Temperature: 30°F to 120°F
   3. Humidity: 0 to 85 percent, noncondensing
   4. Altitude: Less than 20,000 feet above sea level

2.02 BRANCH PANEL PROTECTION

A. Acceptable Manufacturers:
   1. Current Technology
   2. LEA International Inc.
   3. Liebert
   4. Phoenix Contact
   5. General Electric
   6. OR ENGINEER-approved equal

B. Device shall meet all specification requirements in section 2.1 except as follows:
   1. Equipment shall be a multi-stage parallel protector rated for 277/480VAC, 3 PHASE, 4 WIRE, plus ground. The equipment's minimum surge current capacity shall be 120 kA per phase (L-N plus L-G) and 200 kA per mode (L-N, L-G, L-L and N-G).

C. The system protection modules shall contain a technology that utilizes a symmetrical array of balanced metal oxide varistors (MOV). Each MOV will be individually coordinated to pass UL 1449.

PART 3 - EXECUTION

3.01 INSTALLATION

A. The specified service entrance/switchboard/switchgear system shall be installed with the shortest lead length possible not to exceed five (5) electrical feet from the power conductor(s) it is protecting, must have a grounding of 25 Ohms (per NEC Article 250.53(A)(2) Exception) or less and shall avoid any unnecessary or sharp bends. Utilize a 3-pole 15-amp breaker for connection means.

B. The specified branch panelboard system shall be installed with the shortest lead length possible not to exceed a foot and half (1.5) electrical feet from the power conductor(s) it is protecting, must have a grounding of 25 Ohms (per NEC Article 250.53(A)(2) Exception) or less and shall avoid any unnecessary or sharp bends.

3.02 WARRANTY AND QUALITY ASSURANCE

A. Manufacturer shall provide a product warranty for a period of not less than five (5) years from date of installation. Warranty shall cover unlimited replacement of SPD modules during the warranty period. Those firms responding to this specification shall provide proof that they have been regularly engaged in the design, manufacturing and testing of SPD for not less than twenty-five (25) years. Utilize a 3-pole 15-amp breaker for connection means.

3.03 ACCEPTANCE

A. Manufacturer's representative shall visit site, verify installation, and submit to Contracting Officer a letter stating that equipment and installation meets intent of Contract Documents and manufacturer's warranties and that guarantees are in effect.

END OF SECTION

SECTION 26 5000 – LIGHTING

PART 1 – GENERAL

1.01 SUMMARY

A. Section Includes: Luminaires, ballasts, poles and lamps.

1.02 SUBMITTALS

B. Submit manufacturer's data for the following:
   1. Luminaires with designation as indicated on the Drawings, for each one proposed.
   2. Luminaire ballasts, for each one proposed.
   3. Lamps (type, color, wattage, etc.), for each one proposed.
   4. Light pole with accessories, including foundation details. Area light pole foundations must be designed for 80mph wind loading with 100mph wind gusts.

C. Submit manufacturer's data demonstrating compliance with Specifications and the luminaires as indicated on the Drawings.

1.03 QUALITY ASSURANCE

D. Comply with the following Codes and Standards, as well as these Specifications and Contract Documents:
   1. UL-listed and -labeled
   2. NEMA
   3. NFPA 70 (NEC)
   4. IES

PART 2 – PRODUCTS

2.01 ACCEPTABLE MANUFACTURERS

A. See Plans.

2.02 MATERIALS

A. Luminaires shall be:
   1. Furnished with proper outlet boxes, hangers, hardware, supports, canopy extensions, etc. Wall mounted exterior luminaires shall be furnished with a flush {surface} mounted weatherproof box and be rated for outdoor use in wet locations.
   2. Furnished complete with lamps with wattage and voltage as indicated on the Drawings.
   3. Furnished complete with plaster frames and light tight gaskets when recessed in drywall or plaster ceilings or overhangs.
   4. Of the specified finishes and color.

B. Ballasts for luminaires with high pressure sodium lamps shall be:
   1. Autoregulator, constant wattage type (CWA) 90% pf, 18 percent maximum loss, low starting current).
   2. LPA "Peak Lead" auto transformer type, 90 percent pf, 20 percent loss, for two lamp fixtures, metallic vapor.
   3. UL listed and labeled for application.
   4. Sound rated 20 to 24db (free if magnetic hum).
   5. Isolated for vibration.
   6. Not exceed 90ºC operating temperature.

7. Meet NEMA standards and be labeled.

C. Lighting contactors:
   1. Lighting contactors shall be heavy-duty type with a 120 VAC operating coil.
   2. Unless otherwise indicated, the lighting contactor shall have a minimum of three 600V contacts with amperage rating no less than the maximum lighting circuit passing through the contactor.

D. Photocells:
   1. Photocells shall operate on 120VAC unless otherwise indicated and housed in a heavy-duty, weatherproof housing.
   2. Normally open contacts shall close at approximately 3 foot-candles and open at approximately 12 foot-candles.

E. Time clocks:
   1. Time clocks shall be 24-hour, electromechanical type with a synchronous motor and spring-driven reserve power. Power for the timeclock shall be 120VAC or as indicated on the Drawings. Contacts shall be rated 40A at 120VAC.

F. Area Lighting:
   1. Pole mounted area lights shall be furnished complete with pole, handhole, receptacle, gaskets, welded ground lug opposite the handhole, luminaire labeled approved for wet location. Luminaires shall have lamp bases coated with an inhibitor to prevent base from corroding to the socket and be solidly grounded.
   2. Where indicated, luminaires shall include a factory-installed photocell with the following features.
      a. Photocells shall operate on 120VAC unless otherwise indicated and housed in a heavy-duty, weatherproof housing.
      b. Normally open contacts shall close at approximately 3 foot-candles and open at approximately 12 foot-candles.

G. Light Poles:
   1. Light poles shall be constructed of square aluminum tubing with a flush-mounted receptacle and hinged pole base as indicated on the Drawings.

H. Exterior Lighting:
   1. Exterior luminaires shall be furnished complete with gaskets, cast aluminum weatherproof outlet boxes, labeled approved for outdoor locations, have lamp bases coated with an inhibitor to prevent base from corroding to the socket and be solidly grounded.

PART 3 - EXECUTION

3.01 INTERFERENCES

A. Contractor shall carefully examine the complete areas as well as each individual room where luminaires are to be installed, for interference with piping and other trades. Where such interferences occur, provide luminaires with proper type suspension to overcome such interferences.

3.02 INSTALLATION

A. Luminaires shall be installed parallel with walls and ground for a neat appearance. Where luminaires are indicated to be mounted on a perimeter wall, luminaires shall be installed on a flush mounted box at an elevation such that the top of fixture is flush with the top of wall.

B. Operate luminaires after installation and connection. Check for proper operation. Re-lamp luminaires that have failed lamps.

3.03 OPERATION

A. Area lights shall be controlled by a 3-position selector switch (On-Off-PC) located on the outdoor lighting control panel door.

B. Shade canopy lights shall be controlled by a light switch, location as indicated on the Drawings.

C. Lighting shall be controlled as indicated on the Drawings.

END OF SECTION

SECTION 28 3146 – FIRE DETECTION AND ALARM

PART 1 – GENERAL

1.01 SCOPE OF WORK

A. The CONTRACTOR shall furnish and install, smoke detectors, as indicated on the Drawings and specified herein.

1.02 SUBMITTALS

A. Products shall be submitted in accordance with Section 01 3300 – Submittal Procedures, and elsewhere in these Specifications and Contract Documents prior to installation.

1.03 QUALITY ASSURANCE

A. The smoke detector manufacturer's facilities shall be ISO 9001 certified.

B. All smoke detection equipment shall be listed by CSFM (California State Fire Marshall).

PART 2 – PRODUCTS

2.01 GENERAL

A. The smoke detectors shall be designed to facilitate faultless operation to minimize occurrences of false alarms due to faulty equipment, electrical transients, device faults etc.

B. Smoke detectors shall be manufactured by ADT, First Alert, Kidde, BRK or an approved equal.

C. Detectors shall be commercial grade, 120-volt powered with backup batteries.

D. Each detector shall be equipped with adjustable sensitivity.

E. Individual detectors shall be capable of being inter-connected to form a detection system as indicated on the Drawings. Vendor shall state the maximum number of devices which can be inter-connected. The detectors will be loop wired and loop signaled and provided with built-in short circuit isolation. The sounders will have the synchronization feature to ensure that all the sounders give alert.

F. Detectors shall be dual function capable of embracing both photoelectric and ionization chamber technologies.

G. Detectors shall be equipped with both visual (LED) and audible type alarm indicators.

H. Detectors shall have “inside duct” mounting capabilities.

I. Detectors shall be equipped with a cancel fault buzzer.

J. Detectors shall be equipped with fire, fault, warning, and power on lamps.

K. Detectors shall be tamper-proof.

PART 3 – EXECUTION

3.01 INSTALLATION

A. Detectors shall be installed as indicated on the Drawings and per manufacturer's instructions.

B. When required Contractor will train and instruct client's personnel in the correct use, operation, and supervision of the system, prior to the handing over of the project.

3.02 OPERATION

A. The sounders shall have a synchronization feature to ensure that all the sounders give alert. If a fire condition is reported from a smoke detector all detectors shall annunciate the condition alarm simultaneously.

END OF SECTION

SECTION 31 0000 – EARTHWORK

PART 1 - GENERAL

1.01 THE REQUIREMENT

A. Perform all earthwork indicated and required for construction of the WORK, complete and operable in accordance with the Contract Documents and the latest Geotechnical Evaluation and or Soils Report.

1.02 SUBMITTALS

A. Submittals shall be made in accordance with Section 01 3300 – Submittal Procedures.
   1. Excavation Plan and stock pile storage sites.
   2. Backfill Plan

PART 2 - PRODUCTS

2.01 SUITABLE FILL AND BACKFILL MATERIAL REQUIREMENTS

A. General: All excavation or backfill shall conform to the requirements of the Geotechnical Engineer. Fill, backfill, and embankment materials shall be suitable selected or processed clean, fine earth, rock, or sand, free from grass, roots, brush, or other vegetation and approved by the Geotechnical Engineer.

B. Fill and backfill materials to be placed within 6 inches of any structure or pipe shall be free of rocks or unbroken masses of earth materials having a maximum dimension larger than 3 inches.

C. Suitable Materials: Materials not defined as unsuitable in the following Sections are defined as suitable materials and may be used in fills, backfilling and embankment construction subject to the indicated limitations. In addition, when acceptable to the ENGINEER, some of the material listed as unsuitable may be used when thoroughly mixed with suitable material to form a stable composite.

D. Suitable materials may be obtained from on-site excavations, or may be processed on-site materials. If the Geotechnical Engineer determines that excavated material is not suitable then additional compensation may be allowed on site processing or for import materials.

E. The following types of suitable materials are defined, unless otherwise specified in the project Geotechnical Evaluation and or Soils Report.
   1. Type A: Native soil excavated from the site after the site is stripped in accordance with these Specifications. This soil must be approved by the Geotechnical Engineer.
   2. Type B (sand backfill): Sand with 100% passing a 3/8-inch sieve, at least 90% passing a Number 4-sieve, and a sand equivalent value not less than 30.
   3. Type C (crushed rock): Crushed rock shall be imported material that consists of durable rock and gravel that is free of deleterious material and free from slaking or decomposition under the action of alternate wetting and drying. Crushed rock shall meet the following gradation requirements.

Sieve Size	Percentage Passing
1-inch	100
3/4 inch	90 - 100
No. 4	0 - 10
No. 200	0 - 2

These materials should have a durability index of not less than 40.

4. Type D (pea gravel or chat backfill): Crushed rock or gravel with 100% passing a ½-inch sieve and not more than 10% passing a Number 4-sieve.
5. Type E (coarse drain rock): Crushed rock or gravel with a Durability Index of not less than 40 meeting the following gradation requirements:

Sieve Size	Percentage Passing
2-inch	100
1½–inch	90 - 100
1-Inch	20 - 55
¾-inch	0 - 15
No. 200	0 - 3

6. Type F (aggregate base): Crushed rock/gravel aggregate base material shall be in accordance with MAG Standard Specification Section 702. Crushed rock and gravel shall conform to the following gradation as listed in MAG Standard Specification 702, Table 702-1:

Percentage by Weight Passing Sieve			
Select Material			
Sieve Size (Square Opening)	Type A	Type B	Aggregate Base
3-inch	100	-	-
1½–inch	-	100	-
1 1/4–inch	-	-	100
30-75	30-70	38-65	
20-60	20-60	25-60	
No. 30	10-40	10-40	10-40
No. 200	0-12	0-12	3-12

7. Type G (topsoil): Shall not be used.
8. Type H (cement-treated backfill): Material which consists of Type E material, which has been cement-treated so that the cement content of the material is not less than 5% by weight when tested in accordance with ASTM D2901 - Cement Content of Freshly Mixed Soil Cement. The ultimate compressive strength at 28 days shall be not less than 400 psi when tested in accordance with ASTM D1633 - Compressive Strength of Molded Soil - Cement Cylinders.
9. Type I (trench plug): Low permeable fill material, a non-dispersible clay material having a minimum plasticity index of 10.

2.02 UNSUITABLE MATERIAL

A. Unsuitable materials include the materials listed below:
   1. Soils defined as unsuitable in the Geotechnical Evaluation and or Soils Report or by the Geotechnical Engineer.
   2. Soils which, when classified under ASTM D2487 - Soils for Engineering Purposes (Unified Soil Classification System), fall in the Classifications of PT, OH, CH, MH or OL.
   3. Soils, which cannot be compacted sufficiently to achieve the density specified for the intended use.
   4. Materials that contain hazardous or designated waste materials including petroleum hydrocarbons, pesticides, heavy metals, and any material which may be classified as hazardous or toxic according to applicable regulations.

5. Soils that contain greater concentrations of chloride or sulfate ions, or have a soil resistivity or pH less than the existing on-site soils.
6. Topsoil, except as allowed below.

2.03 USE OF FILL, BACKFILL AND EMBANKMENT MATERIAL TYPES

A. The types of materials as designated herein for all required fill, backfill and embankment construction hereunder shall be used.

B. Where these Specifications conflict with the requirements of any local agency having jurisdiction or with the requirements of a pipe material manufacturer, the ENGINEER shall be immediately notified. In case of conflict between types of pipe embedment backfills, the agency-specified backfill material if that material provides a greater degree of structural support to the pipe shall be used. In case of conflict between types of trench or final backfill types, the agency-specified backfill material, if that material provides the greater in-place density after compaction shall be used.

C. Fill and backfill types shall be used in accordance with the following provisions as approved by the Geotechnical Engineer:
   1. Embankment fills shall be constructed of Type A materials, as defined herein, or of primarily Type I mixed with lesser amounts of Type A through Type H materials.
   2. Pipe zone backfill, as defined in these Specifications.
   3. Aggregate base materials under pavements shall be Type F material constructed to the thicknesses indicated. For aggregate sub-base shall be Type H material.
   4. Backfill around structures shall be Type I material or Types F or H where indicated on the plans.
   5. Backfill materials beneath structures shall be defined by the Geotechnical Engineer or as follows:
      a. Drain rock materials under hydraulic structures or other water retaining structures with underdrain systems shall be Type C material or where shown.
      b. Under concrete hydraulic structures or other water retaining structures without underdrain systems, Types C or E shall be used. Undisturbed subgrade.
      c. Under structures where groundwater must be removed to allow placement of concrete, Type E material shall be used. Before the Type E material is placed, filter fabric shall be placed over the exposed foundation.
      d. Under all other structures, Type A or F materials shall be used.
   6. Filter fabric, if not specified on the plans, shall be Mirafi 140 N, Mirafi 700X or ENGINEER-approved equal.

2.04 MATERIALS TESTING

A. All soils testing of samples submitted will be done by a testing laboratory with the ENGINEER's approval and at no additional expense. At its discretion, the ENGINEER may request that samples for testing of any material used in the work be supplied.

B. Particle size analysis of soils and aggregates will be performed using ASTM D422 - Particle-Size Analysis of Soils.

C. Determination of sand equivalent value will be performed using ASTM D2419 - Sand Equivalent Value of Soils and Fine Aggregate.

D. Unified Soil Classification System: References in this Section to soil classification types and standards shall have the meanings and definitions indicated in ASTM D2487. ASTM D2487 in the interpretation of soil classifications shall bind all applicable provisions.

PART 3 - EXECUTION

3.01 EXCAVATION

A. General: Except when specifically provided to the contrary, excavation shall include the removal of all materials of whatever nature encountered, including all obstructions of any nature that would interfere with the proper execution and completion of the WORK. The removal of said materials shall conform to the lines and grades indicated or ordered. Unless otherwise indicated, the entire construction site shall be stripped of all vegetation and debris, and such material shall be removed from the site prior to performing any excavation or placing any fill. All supports and shoring that may be required for the sides of the excavations shall be furnished, placed and maintained. Excavations shall be sloped or otherwise supported in a safe manner in accordance with applicable State and OSHA safety requirements and the requirements of OSHA Safety and Health Standards for Construction (29CFR1926).

B. Removal and Exclusion of Water: Remove and exclude water, including stormwater, groundwater, irrigation water and wastewater, from all excavations as defined in the contract.

3.02 STRUCTURE, ROADWAY, AND EMBANKMENT EXCAVATION

A. Excavation Beneath Structures and Embankments: Except where otherwise indicated for a particular structure, excavation shall be carried to the grade of the bottom of the footing or slab and prepared in accordance with the Geotechnical Evaluation and or Soils Report.

B. Excavation Beneath Paved Areas: Excavation under areas to be paved shall extend to the bottom of the aggregate base and prepared in accordance with the Geotechnical Evaluation and or Soils Report.

3.03 PIPELINE AND UTILITY TRENCH EXCAVATION

A. As referenced in these Specifications.

3.04 OVER-EXCAVATION NOT ORDERED OR INDICATED

A. Any over-excavation carried below the grade ordered or indicated, shall be backfilled and compacted to the required grade with the indicated material, in accordance with the Geotechnical Engineer’s requirements.

3.05 DISPOSAL OF EXCESS EXCAVATED MATERIAL

A. Obtain OWNER approvals for disposal of excess excavated material in a designated wasting area, as defined in the contract.

3.06 BACKFILL - GENERAL

A. Backfill shall not be dropped directly upon any structure or pipe. Backfill shall not be placed around or upon any structure until the concrete has attained sufficient strength to withstand the loads imposed.

B. Except for drainrock materials being placed in over-excavated areas or trenches, backfill shall be placed after all water is removed from the excavation and the trench sidewalls and bottom have been dried to moisture content suitable for compaction.

C. Immediately prior to placement of backfill materials, the bottoms and sidewalls of trenches and structure excavations shall have all loose sloughing, or caving soil and rock materials removed. Trench sidewalls shall consist of excavated surfaces that are in a relatively undisturbed condition before placement of backfill materials.

3.07 PLACING AND SPREADING OF BACKFILL MATERIALS

A. Backfill materials shall be placed and spread evenly in layers. When compaction is achieved using mechanical equipment, the layers shall be evenly spread so that when each layer compacted shall not exceed 6 inches in thickness. The compaction lift depth may be adjusted at the direction of the Geotechnical Engineer.

B. During spreading, each layer shall be thoroughly mixed as necessary to promote uniformity of material in each layer. Pipe zone backfill materials shall be manually spread around the pipe so when compacted the pipe zone backfill will provide uniform bearing and side support.

C. Backfill should be compacted within a water content range of 3 percent below to 3 percent above optimum.

3.08 COMPACTION OF FILL, BACKFILL AND EMBANKMENT MATERIALS

A. Each layer of Types A, B, F and G, backfill materials as defined herein, where the material is graded such that at least 10% passes a No. 4 sieve, shall be mechanically compacted to the indicated percentage of density. Equipment that is consistently capable of achieving the required degree of compaction shall be used and each layer shall be compacted over its entire area while the material is at the required moisture content.

B. Each layer of Type C, D and E backfill materials shall be compacted by means of at least 2 passes from a flat plate vibratory compactor. When such materials are used for pipe zone backfill, vibratory compaction shall be used at the top of the pipe zone or at vertical intervals of 24 inches, whichever is the least distance from the sub-grade.

C. Flooding, pending or jetting shall not be permitted.

D. Equipment weighing more than 10,000 pounds shall not be used closer to walls than a horizontal distance equal to the depth of the fill at that time. Hand operated power compaction equipment shall be used where use of heavier equipment is impractical or restricted due to weight limitations. Exception: With the written approval of the Structural Engineer.

E. Backfill around and over pipelines that is mechanically compacted shall be compacted using light, hand operated, vibratory compactors and rollers. After completion of at least 2 feet of compacted backfill over the top of pipeline, compaction equipment weighing no more than 8,000 pounds may be used to complete the trench backfill.

F. Compaction Requirements: The following compaction test requirements shall be in accordance with ASTM D1557 - Laboratory Compaction Characteristics of Soils Using Modified Effort (56,000 ft - lbf/ft3) (2,700 kN-m/m3) for Type A, B, C, E, F, and G materials and in accordance with ASTM D4253 - Maximum Index Density and Unit Weight of Soils Using a Vibratory Table, and D4254 - Minimum Index Density and Unit Weight of Soils and Calculation of Relative Density, for Type C, D, E and H materials. Where agency, utility company, or Geotechnical Evaluation and or Soils Report requirements govern, the highest compaction standards shall apply.

Location or Use of Fill	**Percentage of Maximum Density**
Final backfill, beneath paved areas or structures	95
Final backfill, not beneath paved areas or structures	90
Embankments and fills	90
Embankments and fills beneath paved areas or structures	90
Backfill beneath structures and hydraulic structures	95
Backfill and fill around structures on reservoir or structure roof	90
Topsoil (Type G material)	80

Aggregate base or sub-base (Type F or H material)	95

3.09 FILL AND EMBANKMENT CONSTRUCTION

A. The area where a fill or embankment is to be constructed shall be cleared, grubbed, and stripped in accordance with these Specifications. Embankment and fill material shall be placed and spread evenly in approximately horizontal layers. Each layer shall be thoroughly mixed and moisture conditioned, as necessary. Unless otherwise approved by the ENGINEER, each layer shall not exceed 6 inches of compacted thickness.

B. Base keys shall be provided at the toes of all fill slopes more than 5 feet high. The keys shall be cut into underlying undisturbed soil. Keys shall be a minimum of 12 feet wide and 4 feet deep measured at the downslope side of the key. Keys shall be sloped back toward the fill slope at a gradient of no less than 2%.

C. When an embankment or fill is to be made and compacted against hillsides or slopes steeper than 4:1, the slopes shall be horizontally benched to key the embankment or fill to the underlying ground. A minimum of 12 inches normal to the slope shall be removed and re-compacted as the embankment or fill is brought up in layers. Material thus cut shall be re-compacted along with the new material. Hillside or fill slopes 4:1 or flatter shall be prepared in accordance with Paragraph A, above.

D. Where embankment or structure fills are constructed over pipelines, the first 4 feet of fill over the pipe shall be constructed using light placement and compaction equipment that does not damage the pipe. Heavy construction equipment shall maintain a minimum distance from the edge of the trench equal to the depth of the trench until at least 4 feet of fill over the pipe has been completed.

E. All permanent fill slopes shall be overbuilt by at least 1 foot and then cut to final grade to provide adequate compaction.

3.10 GRADING

A. General: Uniformly grade areas to a smooth surface, free of irregular surface changes. Comply with compaction requirements and grade to cross-sections, lines, and elevations indicated.
   1. Provide a smooth transition between adjacent existing grades and new grades.
   2. Cut out soft spots, fill low spots, and trim high spots to comply with required surface tolerances.

B. Site Grading: Slope grades to direct water away from buildings/structures and to prevent ponding. Finish subgrades to required elevations within the following tolerances:
   1. Lawn or Unpaved Areas: Plus or minus 1 inch
   2. Walks: Plus or minus 1 inch
   3. Pavements: Plus or minus ½-inch

3.11 FIELD TESTING

A. General: All field soils testing shall be done by a testing laboratory as specified in the Contract Documents.

B. Where soil material is required to be compacted to a percentage of maximum density, the maximum density at optimum moisture content will be determined in accordance with Method C of ASTM D1557. Where cohesionless, free draining soil material is required to be compacted to a percentage of relative density, the calculation of relative density will be determined in accordance with ASTM D4253 and D4254. Field density in-place tests will be performed in accordance with ASTM D1556 - Density and Unit Weight of Soil in Place by the Sand-Cone Method, ASTM D2922 - Density of Soil and Soil-Aggregate in Place by Nuclear Methods (Shallow Depth), or by such other means acceptable to the ENGINEER.

C. In case the test of the fill or backfill show non-compliance with the required density, a remedy as may be required to insure compliance shall be accomplished. Subsequent testing to show compliance shall be performed by a testing laboratory.

D. Provide test trenches and excavations including excavation, trench support and groundwater removal for the ENGINEER's field soils testing operations. The trenches and excavations shall be provided at the locations and to the depths required by the ENGINEER.

END OF SECTION

SECTION 31 0519.16 – GEOMEMBRANE FOR EARTHWORK

PART 1 – GENERAL

1.01 REQUIREMENT

A. Furnish and install geomembrane liner with associated appurtenances in accordance with the Contract Documents.

B. Soils Report: This work shall conform to the requirements of the latest Geotechnical Evaluation and or Soils Report.

1.02 REFERENCE SPECIFICATIONS, CODES AND STANDARDS

A. The supply and installation of this liner shall be in accordance with the following references:

B. ASTM Standards

D413	Rubber Property – Adhesion to Flexible Substrate
D638	Tensile Properties of Plastics
D698	Laboratory Compaction Characteristics of Soil Using Standard Effort (12 400 ft-lbf/ft3 (600 kN-m/m3))
D751	Coated Fabrics
D1004	Initial Tear Resistance of Plastics Film and Sheeting
D1204	Linear Dimensional Changes of Nonrigid Thermoplastic Sheeting or Film at Elevated Temperature
D1790	Brittleness Temperature of Plastic Sheeting by Impact
D2136	Coated Fabrics Low Temperature Bend Test
D4545	Determining the Integrity of Factory Seams Used in Joining Manufactured Flexible Sheet Geomembranes
D4833	Index Puncture Resistance of Geotextiles, Geomembranes and Related Products
D5199	Measuring Nominal Thickness of Geotextiles and Geomembranes
D5641	Geomembrane Seam Evaluation by Vacuum Chamber
D5721	Air-Oven Aging of Polyolefin Geomembranes
D5820	Pressurized Air Channel Evaluation of Dual Seamed Geomembranes
D5884	Determining Tearing Strength of Internally Reinforced Geomembranes
D6392	Determining the Integrity of Nonreinforced Geomembrane Seams Produced Using Thermo-Fusion Methods

C. GRI Standards:
1. GM 10 Specification for the Stress Crack Resistance of Geomembrane Sheet
2. GM 11 Accelerated Weathering of Geomembranes using a Fluorescent UVA Condensation Exposure Device
3. GM 12 Measurement of the Asperity Height of Geomembranes Using a Depth Gage

1.03 SUBMITTALS

A. Submittals shall be made in accordance with Section 01 33 00 – Submittal Procedures.

B. Submit a panel layout indicating the containment area arrangement, fabricated seam orientation, field seam location (if applicable), anchor trench locations, wall or concrete attachments and pipe and pile locations.

1.04 QUALITY ASSURANCE

A. The manufacturer shall provide a 5-year warranty at a minimum.

PART 2 – PRODUCTS

2.01 GENERAL CHARACTERISTICS

A. The geomembrane shall be a 45 mil reinforced polypropylene material resistant to tears, UV radiation, and consistent with site climatological conditions.

B. Material Properties:

Style	**Polypropylene**	
	ASTM	Quantity
Minimum Thickness (Nominal)	D5199	45 mil
Breaking Strength (lbs) (grab tensile at strain rate of 12 in./min.)	D751	200 min 260 typ
Elongation	D751	25%
Tear Resistance (min. Ave.) lbs	D5884	100 (160)
Puncture Resistance (min. Ave.) lbs	D4833	85 (110)
Low Temperature Impact Resistance	D2136	-40°F
Linear Dimensional Change	D1204	1.0%
Hydrostatic Resistance (psi)	D751	450 typ

C. Field Seam Properties:

Style	**Polypropylene**	
	ASTM	Quantity
Bonded Seam Strength (lbs)	D751	200
Peel Adhesion (lbs)	D413	20

D. Non-Woven Geotextile: Geotextile shall be made of staple filaments of polypropylene fiber and shall be needle-punched and heat set. The geotextile shall be heavyweight with minimum weight of 16 oz/ square yard.

PART 3 – EXECUTION

3.01 SURFACE PREPARATION

A. The contractor shall be responsible for preparing and maintaining the subgrade surface and anchor trenches in good condition suitable for laying of the geomembrane. Prepared surfaces shall be smooth and free of sharp objects, rocks, and organics (roots). If a suitable subgrade is not available then a cushion layer consisting of 100 mm (4 inches) of clean sand or a non-woven geotextile shall be placed prior to liner placement. For membrane installed on top of concrete or hard surfaces, non-woven geotextile shall be placed between the concrete/ hard surface and the membrane. Geotextile shall be per manufacturer requirements or recommendations in order to conform with the membrane's warranty.

B. The prepared subgrade should be compacted to a minimum 95% of maximum dry density according to the Standard Proctor test (ASTM D698) or as designated in the Geotechnical Evaluation and or Soils Report. The subgrade shall be firm and unyielding, and shall be compacted to a level that permits the movement of construction equipment, liner deployment equipment, and other related traffic without causing rutting and/or deformation of the surface.

C. The surface shall be leveled and prepared to a uniform finish free of abrupt or sharp changes in grade. The surface shall not include pockets or voids of any kind and should not be rutted or contain soil windrows along the surface. In addition, the surface should

be free of frost lumps and ice. The prepared subgrade should also be shaped and graded to facilitate surface drainage both prior to, and during the installation of the lining system.

D. All concrete surfaces to which the liner will attach shall have a “smooth trowel” finish and shall be level, smooth, and have all corners radiused to a minimum 25 mm (1 inch).

3.02 INSTALLATION

A. Installations shall be performed in a logical sequence by a contractor/installer experienced in this type of work.

B. The liner panels shall be installed in accordance with the manufacturer’s instructions.

END OF SECTION

SECTION 31 1000 – SITE CLEARING AND GRUBBING

PART 1 - GENERAL

1.01 THE REQUIREMENT

A. The WORK of this Section as defined in the Contract includes all work necessary to satisfactorily prepare the site as shown on the accepted drawings and as specified herein. Following this preparation, the site shall be in such a condition as to easily continue with the next operation whether it be excavating, backfilling, or any other operations that are a part of the project. Site preparation includes clearing, grubbing, grading, tree and shrub removal, native grass stripping and removing and disposing of all debris within the limits of the project and such other areas as may be indicated on the plans or required work, except such objects as are designated to remain or are to be removed in accordance with the plans. This work shall also include the preservation from injury or defacement of all vegetation and objects designated to remain.

1.02 SUBMITTALS

A. Submittals shall be made in accordance with Section 01 33 00 – Submittal Procedures.

B. Shop Drawings: Submit clearing limits, staging, and site access plans and limits.

1.03 SITE SURVEY AND LAYOUT

A. The CONTRACTOR shall establish construction, and clearing limits by providing the initial site survey and field staking. The initial staking will include property line limits, casements and access points and structure locations with 100 ft offsets. The OWNER shall provide the contractor the survey data for the project to include the survey control points, hubs, etc. and benchmarks for the site. The contractor shall layout required construction staking as defined in these Specifications.

1.04 PERMITS

A. Verify all required permits have been secured for this work. Comply with applicable local Air Pollution Control requirements. In the absence of specific ordinances, periodic watering shall be done to control dust throughout the work. Make all necessary arrangements for water required for this work.

PART 2 - PRODUCTS (NOT USED)

PART 3 - EXECUTION

3.01 PRIMARY SITE ACCESS

A. The CONTRACTOR shall provide clearing, grubbing, and stripping as defined in the contract.

B. The CONTRACTOR shall develop any necessary access to the Site, including access entrance barriers to prohibit entry of unauthorized persons as defined in the Contract. The contractor shall provide at the project site access barriers to prohibit entry of unauthorized persons as defined in the Contract.

C. Adequately support existing structures, sidewalks, slabs, pavements, utilities, and other facilities that may be affected by the proposed construction as defined in the Contract.

D. Utility Interference: Where existing utilities interfere with the WORK, notify the utility owner before proceeding in accordance with the General Conditions.

3.02 CLEARING, GRUBBING AND STRIPPING

A. Areas to be developed should be cleared of all surface and subsurface deleterious materials including debris, shrubs, and associated roots. Excavations extending below the planned finished site grades should be cleaned and backfilled with suitable material compacted to the recommendations stated in these Specifications.

B. Following clearing, the site should be striped to remove surface organic materials. Organics should be stripped from the ground surface to a depth of at least 2 to 3 inches below the surface of the organics. It may be acceptable to disk the near surface organics and blend them with the onsite soils. A geotechnical engineer should be retained to review the surface conditions prior to site grading.

C. Site should be cleared of structures, pavement, sidewalks, concrete or masonry debris, trees, logs, upturned stumps, loose boulders, and any other objectionable material of any kind which would interfere with the performance or completion of the WORK, create a hazard to safety, impair the subsequent usefulness of the WORK, or obstruct its operation. Trees and other natural vegetation outside the actual lines of construction shall be protected from damage during construction.

D. Septic tanks, drain fields, connection lines, and any other underground structures, debris, or waste shall be removed if found on the Site. All objectionable material from the clearing and grubbing process shall be removed from the Site and wasted in approved safe locations.

E. Geotechnical engineer shall be retained to view the surface conditions prior to the site grading.

3.03 OVER-EXCAVATION, REGRADING, AND BACKFILL UNDER FILL AREAS

A. All grading and excavation shall conform to the requirements of these Specifications.

3.04 EXISTING UTILITY SERVICES

A. At start of work, CONTRACTOR shall locate and identify all utility services located within the construction limits (both underground and overhead). Utilize Blue Stake services and private location services as required, including potholing as may be necessary.

B. CONTRACTOR shall disconnect or reroute all existing services, where such services will be affected by construction operations. Comply with all instructions issued during the pre-construction conference regarding coordination, advance notice, emergency repairs, etc.

C. All disconnections or terminations shall be performed in a safe manner, in accordance with applicable codes and regulations. Provide any disconnect switches, valves, plugs, tees, etc., as required for the various locations.

END OF SECTION

SECTION 31 2319 – DEWATERING

PART 1 - GENERAL

1.01 THE REQUIREMENT

A. The CONTRACTOR shall dewater all excavations, as required to complete the work in accordance with the Contract Documents. The CONTRACTOR shall secure all necessary permits to complete the requirements of this Section of the Specifications and any and all Federal, State, or local applicable requirements.

B. Soils Report: This work shall conform to the requirements of the latest Geotechnical Evaluation and Groundwater Hydrogeological Reports.

1.02 CONTRACTOR SUBMITTALS

A. Prior to commencement of excavation, the CONTRACTOR shall submit a detailed plan and operation schedule for dewatering of excavations. The CONTRACTOR may be required to demonstrate the system proposed and to verify that adequate equipment, personnel, and materials are provided to dewater the excavations at all locations and times. The CONTRACTOR's dewatering plan is subject to review by the ENGINEER. This includes all means, methods and required approval of the disposal of the water being removed.

1.03 QUALITY CONTROL

A. It shall be the sole responsibility of the CONTRACTOR to control the rate and effect of the dewatering in such a manner as to avoid all objectionable settlement and subsidence.

B. All dewatering operations shall be adequate to assure the integrity of the finished project and shall be the responsibility of the CONTRACTOR.

C. Where critical structures or facilities exist immediately adjacent to areas of proposed dewatering, reference points shall be established and observed at frequent intervals to detect any settlement that may develop. The responsibility for conducting the dewatering operation in a manner that will protect adjacent structures and facilities rests solely with the CONTRACTOR. The cost of repairing any damage to adjacent structures and restoration of facilities shall be the responsibility of the CONTRACTOR.

PART 2 - PRODUCTS

2.01 EQUIPMENT

A. Dewatering, where required, may include the use of well points, sump pumps, temporary pipelines for water disposal, rock or gravel placement, and other means. Standby pumping equipment shall be maintained on the jobsite.

PART 3 - EXECUTION

3.01 GENERAL REQUIREMENTS

A. The CONTRACTOR shall provide all permits and equipment necessary for dewatering. It shall have on hand, at all times, sufficient pumping equipment and machinery in good working condition and shall have available, at all times, competent workmen for the operation of the pumping equipment. Adequate standby equipment shall be kept available at all times to insure efficient dewatering and maintenance of dewatering operation during power failure.

B. Dewatering for pipelines shall commence when groundwater is first encountered, and shall be continuous until such times as water can be allowed to rise in accordance with the provisions of this Section or other requirements.

C. At all times, site grading shall promote drainage. Surface runoff shall be diverted from excavations. Water entering the excavation from surface runoff shall be collected in shallow ditches around the perimeter of the excavation, drained to sumps, and be pumped or drained by gravity from the excavation to maintain a bottom free from standing water.

D. Dewatering shall at all times be conducted in such a manner as to preserve the undisturbed bearing capacity of the subgrade soils at proposed bottom of excavation.

E. If foundation soils are disturbed or loosened by the upward seepage of water or an uncontrolled flow of water, the affected areas shall be excavated and replaced with drain rock (Type E).

F. The CONTRACTOR shall maintain the water level below the bottom of excavation in all work areas where groundwater occurs during excavation construction, backfilling, and up to acceptance.

G. The CONTRACTOR shall prevent flotation by maintaining a positive and continuous removal of water. The CONTRACTOR shall be fully responsible and liable for all damages that may result from failure to adequately keep excavations dewatered.

H. If well points or wells are used, they shall be adequately spaced to provide the necessary dewatering and shall be sand-packed and/or other means used to prevent pumping of fine sands or silts from the subsurface. A continual check by the CONTRACTOR shall be maintained to ensure that the subsurface soil is not being removed by the dewatering operation.

I. The CONTRACTOR shall dispose of water from the WORK in a suitable manner without damage to adjacent property. CONTRACTOR shall be responsible for obtaining any permits that may be necessary to dispose of water. No water shall be drained into work built or under construction without prior consent of the OWNER and ENGINEER. Water shall be filtered using an approved method to remove sand and fine-sized soil particles before disposal into any drainage system.

J. The release of groundwater to its static level shall be performed in such a manner as to maintain the undisturbed state of the natural foundation soils, prevent disturbance of compacted backfill and prevent flotation or movement of structures, pipelines, and sewers.

K. All temporary dewatering measures shall be removed when they are no longer needed.

END OF SECTION

SECTION 31 2333 – TRENCHING AND BACKFILLING

PART 1 - GENERAL

1.01 THE REQUIREMENT

A. Section Includes: Trench excavation, fine grading, pipe bedding, backfilling, and compaction for the following, including requirements for ditch crossings:
   1. Pipe and electrical conduits.
   2. Manholes, valves, or other accessories.
   3. Potable and non-potable water pipe appurtenances.

B. Soils Report: This work shall conform to the requirements of the latest Geotechnical Evaluation.

1.02 REFERENCES

A. American Society for Testing and Materials (ASTM):

C117	Material Finer than 75 Fm (No. 200) Sieve in Mineral Aggregates by Washing
C131	Resistance to Degradation of Small-Size Course Aggregate by Abrasion and Impact in the Los Angeles Machine
C136	Sieve Analysis of Fine and Course Aggregates
D1556	Density and Unit Weight of Soil in Place by the Sand Cone Method
D1557	Laboratory Compaction Characteristics of Soil Using Modified Effort
D2922	Density of Soil and Soil-Aggregate in Place by Nuclear Methods (Shallow Depth)
D2937	Density of Soil in Place by the Drive-Cylinder Method
D4318	Liquid Limit, Plastic Limit, and Plasticity Index of Soils
OSHA	Document 2226 Excavation

1.03 SUBMITTALS

A. Submittals shall be furnished in accordance with Section 01 3300 – Submittal Procedures.

B. Products Data: For all proposed bedding and backfill materials as defined in these Specifications.
   1. Material source
   2. Gradation
   3. Testing data

PART 2 - PRODUCTS

2.01 MATERIALS

A. General:
   1. The following types of suitable materials are defined, unless otherwise specified by the Geotechnical Evaluation.
   2. Provide material having maximum particle size not exceeding 2 inches and that is free of leaves, grass, roots, stumps, and other organic matter.
   3. Materials derived from processing demolished or removed asphalt concrete are not acceptable.

2.02 UNSUITABLE MATERIAL

A. Unsuitable materials include the materials listed below:
   1. Soils as defined unsuitable in the Geotechnical Evaluation or by the Geotechnical Engineer.
   2. Soils which, when classified under ASTM D2487 - Standard Classification of Soils for Engineering Purposes (Unified Soil Classification System), fall in the Classifications of PT, OH, CH, MH or OL.
   3. Soils, which cannot be compacted sufficiently to achieve the density specified for the intended use.
   4. Materials that contain hazardous or designated waste materials including petroleum hydrocarbons, pesticides, heavy metals, and any material which may be classified as hazardous or toxic according to applicable regulations.
   5. Soils that contain greater concentrations of chloride or sulfate ions, or have a soil resistivity or pH less than the existing on-site soils.
   6. Topsoil, except as allowed below.

2.03 USE OF FILL, BACKFILL

A. Where these Specifications conflict with the requirements of any local agency having jurisdiction or with the requirements of a pipe material manufacturer, the ENGINEER shall be immediately notified. In case of conflict between types of pipe embedment backfills, the agency-specified backfill material if that material provides a greater degree of structural support to the pipe shall be used. In case of conflict between types of trench or final backfill types, the agency-specified backfill material, if that material provides the greater in-place density after compaction shall be used.

B. Fill and backfill types shall be used in accordance with the following provisions:
   1. Pipe zone backfill shall consist of the following materials for each pipe material listed below.
      a. Mortar coated pipe, concrete pipe and un-coated ductile iron pipe shall be provided Type C or D pipe bedding and embedment backfill material.
      b. Coal tar enamel coated pipe, polyethylene encased pipe, tape wrapped pipe and other non-mortar coated pipe shall be backfilled with Type B bedding and embedment zone backfill material.
      c. Plastic pipe shall be backfilled with Type B, C, or D bedding and embedment zone backfill material.
      d. Where pipelines are installed on grades exceeding 4%, and where backfill materials are graded such that there is less than 10% passing a Number 4 sieve, trench plugs of Type H or I material shall be provided at maximum intervals of 200 feet unless indicated otherwise.
   2. Allowable trench backfill materials for pipelines as defined under the MAG Standards and Specifications.

2.04 MATERIALS TESTING

A. As defined in these Specifications.

PART 3 - EXECUTION

3.01 PREPARATION

A. General:
   1. All utility piping shall be field surveyed for location of pipe runs and joints prior to backfilling.
   2. Before laying pipes or electrical conduits in fill, place fill and compact it to not less than 1 ft above top of pipe or conduit.

3. After placing and compacting fill, excavate through fill and fine grade as required in this Section.

B. Protection: Stabilize excavation as required by OSHA or local standards, whichever is more stringent.

3.02 EXCAVATION AND GRADING

A. Exploratory Excavation:
   1. Excavate and expose buried points of connection to existing utilities where indicated on the Drawings. Excavation shall be performed prior to preparation of Shop Drawings for connections and before fabrication of pipe, and the data obtained shall be used in preparing Shop Drawings.
   2. Data, including dates, locations excavated, and sketches, shall be submitted to the ENGINEER within one week of excavation.
   3. Damage to utilities from excavation activities shall be repaired at the CONTRACTOR's expense.

B. Trench Excavation:
   1. General Requirements:
      a. If, because of soil conditions, safety requirements or other reasons, trench width at top of pipe is increased beyond width specified in the MAG Standards and Specifications, upgrade laying conditions or install stronger pipe designed in conformance with the appropriate pipe specification section for the increased trench width, without additional cost.
      b. Pipe and Electrical Conduits:
         1) Lay pipe or electrical conduits in open trench.
         2) If bottom of excavation is found to consist of rock or any material that by reason of its hardness cannot be excavated to provide uniform bearing surface, remove such rock or other material to a depth of not less than 4 inches below bottom of pipe and refill to grade with aggregate base course material or sand placed at uniform density, with minimum possible compaction, at no additional cost.
         3) If bottom of excavation is found to consist of soft or unstable material which is incapable of properly supporting pipe, remove such material to a depth and for the length required, as determined by the ENGINEER, and then refill trench to grade with aggregate base course or sand, compacted to 90 percent of maximum density.
         4) Where indicated on the Drawings, cradle pipe in concrete.
      c. For Manholes, Valves, or Other Accessories:
         1) Provide excavations sufficient to leave at least 12 inches clear between their outer surfaces and embankment or shoring which may be used to hold banks and protect them.
         2) Do not backfill with earth under manholes, vaults, tanks, or valves.
         3) Fill any unauthorized excess excavation below elevation indicated on the Drawings for foundation of any structure with sand, aggregate base material, bedding material, or concrete at no additional cost.
         4) Backfilling of Manhole Excavation: Conform to backfilling requirements as specified for pipe and utility trench backfill in this Section.
      d. Potable and Non-Potable Water Pipe Appurtenances:
         1) Lay in trenches separate from those used for sewers.
         2) Unless otherwise specified or indicated on the Drawings, lay in trenches having cover of not less than 3 feet below surface of ground and located at distance of not less than 6 feet from any parallel sewer trench, or as required by local requirements.

e. At Road Crossings or Existing Driveways:
   1) Make provision for trench crossings at these points, either by means of backfills, tunnels, or temporary bridges.

C. Trench Fine Grading:
   1. For Pipes 16 Inches in Nominal Diameter and Under:
      a. Unless otherwise specified, accurately grade bottom of trench to provide uniform bearing and support for each section of pipe, on undisturbed soil at every point along pipe's entire length, except for portions of pipe where it is necessary to excavate for bells and for proper sealing of pipe joints.
   2. For Pipe over 16 Inches in Diameter:
      a. Over-excavate bottom of trench by at least 4 inches, or 1/12 outside diameter of pipe, whichever is greater.
      b. Fill overcut with bedding material specified herein, and fine graded as specified above.
      c. Place bedding material at uniform density, with minimum possible compaction.
      d. Where trench excavation is below grade of bedding material, restore trench bottom to proper grade by backfilling and compacting backfill to 95 percent of maximum density, at no additional cost. Use bedding material as specified in this Section.
   3. Bell or Coupling Holes:
      a. Dig holes after trench bottom has been graded.
      b. Provide holes of sufficient width to provide ample room for grouting, banding, or welding.
      c. Excavate holes only as necessary in making joints and to ensure that pipe rests upon prepared trench bottom and not supported by any portion of the joint.
   4. Depressions for Joints, Other than Bell and spigot:
      a. Make in accordance with recommendations of joint manufacturer for particular joint used.

3.03 DISPOSAL OF EXCESS EXCAVATED MATERIAL

A. Obtain OWNER approvals for disposal of excess excavated material in designated wasting area, as defined in the contract.

3.04 BACKFILL - GENERAL

A. Backfill shall not be dropped directly upon any pipe. Backfill shall not be placed around or upon any structure until the concrete has attained sufficient strength to withstand the loads imposed.

B. Except for drainrock materials being placed in over-excavated areas or trenches, backfill shall be placed after all water is removed from the excavation and the trench sidewalls and bottom have been dried to moisture content suitable for compaction.

C. If a moveable trench shield is used during excavation, pipe installation and backfill operations, the shield shall be moved by lifting the shield free of the trench bottom or backfill and then moving the shield horizontally. No trench shields shall be dragged along the trench causing damage or displacement to the trench sidewalls, the pipe, or the bedding and backfill.

D. Immediately prior to placement of backfill materials, the bottoms and sidewalls of trenches and structure excavations shall have all loose sloughing, or caving soil and rock materials removed. Trench sidewalls shall consist of excavated surfaces that are in a relatively undisturbed condition before placement of backfill materials.

3.05 PLACING AND SPREADING OF BACKFILL MATERIALS

A. During spreading, each layer shall be thoroughly mixed as necessary to promote uniformity of material in each layer. Pipe zone backfill materials shall be manually spread

around the pipe so when compacted the pipe zone backfill will provide uniform bearing and side support.

B. Where the backfill material moisture content is below the optimum moisture content, water shall be added before or during spreading until the moisture content is between optimum and 3% over the optimum.

C. Where the backfill material moisture content is too high to permit the specified degree of compaction the material shall be dried until the moisture content is between optimum and 3% over the optimum.

3.06 COMPACTION OF FILL, BACKFILL AND EMBANKMENT MATERIALS

A. Compaction Requirements: Backfill compaction requirements shall be per the Geotechnical Evaluation and or Soils Report and per MAG Standards and Specifications.

3.07 PIPE AND UTILITY TRENCH BACKFILL

A. Pipe Zone Backfill:
   1. The pipe zone is defined as that portion of the vertical trench cross-section lying between a plane below the bottom surface of the pipe and a plane at a point above the top surface of the pipe. The bedding is defined as that portion of pipe zone backfill material between the trench sub-grade and the bottom of the pipe. The embedment is defined as that portion of the pipe zone backfill material between the bedding and a level line.
   2. After compacting the bedding, perform a final trim using a laser or approved method for establishing grade, such that each pipe section when first laid will be continually in contact with the bedding along the extreme bottom of the pipe. Excavation for pipe bells and welding shall be made as required.
   3. The pipe zone shall be backfilled with the indicated backfill material. Care to prevent damage to the pipeline coating, cathodic bonds, and the pipe itself during the installation and backfill operations shall be exercised.
   4. If a moveable trench shield is used during backfill operations, the shield shall be lifted to a location above each layer of backfill material prior to compaction of the layer. The pipe or backfill shall not be displaced while the shield is being moved.

B. Trench Zone Backfill: After the pipe zone backfills have been placed, backfilling of the trench zone may proceed. The trench zone is defined as that portion of the vertical trench cross-section lying as indicated between a plane above the top surface of the pipe and a plane at a point, 18 inches below the finished surface grade, or if the trench is under pavement, 18 inches below the roadway sub-grade.

C. Final Backfill: Final backfill is all backfill in the trench cross-sectional area within 18 inches of finished grade, or if the trench is under pavement, all backfill within 18 inches of the roadway sub-grade.

3.08 FIELD QUALITY CONTROL

A. Tests:
   1. Confirmation Tests:
      a. CONTRACTOR’s Responsibilities:
         1) Accomplish specified compaction of trench backfill.
         2) Control operations by confirmation tests to verify and confirm that compaction work complies, and is complying at all times, with requirements specified in this Section concerning compaction, control, and testing.
         3) All field soils testing will be done by a testing laboratory as specified in the Contract Documents.
         4) Copies of Confirmation Test Reports: Submit promptly to the ENGINEER.
      b. Frequency of Confirmation Testing:

1) Perform testing not less than as follows:
   a) For Trenches: At each test location include tests for each type or class of backfill from bedding to finish grade.
   b) In Open Fields: Two every 1,000 linear feet.
   c) Along Dirt or Gravel Road or off Traveled Right-of-way: Two every 500 linear feet.
   d) Crossing Paved Roads: Two locations along each crossing.
   e) Under Pavement Cuts or Within 2 Feet of Pavement Edges: one location every 400 linear feet.

2. Compliance Tests:
   a. Frequency of Testing: Periodic compliance tests will be made by the
      1) ENGINEER to verify that compaction is meeting requirements previously specified.
   b. If Compaction Fails to Meet Specified Requirements: Perform remedial work by one of the following methods:
      1) Remove and replace backfill at proper density.
      2) Bring density up to specified level by other means acceptable to the ENGINEER.
   c. Retesting:
      1) Costs of Retesting: Costs of retesting required to confirm and verify that remedial work has brought compaction within specified requirements shall be borne by the CONTRACTOR.
      2) CONTRACTOR's Confirmation Tests During Performance of Remedial Work:
         a) Performance: Perform tests in manner acceptable to the ENGINEER.
         b) Frequency: Double amount specified for initial confirmation tests.

2. Leak Testing Pipe:
   a. After Bedding the Pipe, CONTRACTOR Has the Following Option To:
      1) Leak-test pipe.
      2) Backfill to surface, at his own risk, before leak water-testing pipe. If pipe does not pass test, uncover pipe, locate leaks, repair, and retest, repeating until pipe section under test passes.

END OF SECTION

SECTION 31 2524 – ROCKFALL BARRIER

PART 1 - GENERAL

1.01 THE REQUIREMENT

A. The CONTRACTOR shall furnish all labor, materials, equipment, and supervision necessary to provide and install a 10 ft high rockfall barrier at the locations shown in the Contract Documents. The barrier shall be designed to stop a 3 ft diameter boulder under the site specific geological and slope conditions.

B. Soils Report: This work shall conform to the requirements of the latest Geotechnical Evaluation.

C. Acceptable manufacturers include Geobrugg, Walcoom, or Engineer Approved Equal.

1.02 CONTRACTOR SUBMITTALS

A. The CONTRACTOR shall submit a complete design package for the proposed rockfall barrier system including design calculations, manufacturer data sheets, structural details, connection hardware, post embedment details, anchor layout, foundation requirements, installation procedures, and certification by a licensed professional engineer registered in the State of Arizona.

B. Shop drawings shall include plan view, elevation view, barrier height, net type, mesh size, post spacing, anchorage components, energy absorption rating, and all appurtenances.

C. The CONTRACTOR shall provide product certification that the barrier system meets or exceeds the required impact-energy performance and dimensional requirements.

1.03 QUALITY CONTROL

A. The CONTRACTOR shall be responsible for ensuring all barrier materials and installation procedures comply with manufacturer requirements and project specifications.

B. Anchorage drilling, grouting, foundation preparation, post installation, mesh tensioning, and all associated work shall be performed by personnel familiar with the installation.

C. All barrier components shall be inspected prior to installation. Damaged or defective materials shall not be incorporated into the WORK.

PART 2 - PRODUCTS

2.01 GENERAL

A. The rockfall barrier system shall be a modular, engineered, flexible net barrier consisting of vertical support posts, base plates or footings, mesh panels, lateral support cables, top and bottom support cables, and anchor assemblies.

B. The system shall be capable of resisting the required impact energy determined from site conditions and the design boulder size.

C. Barrier height shall be 10 ft measured from finished grade at the base of the posts.

D. Mesh shall be high tensile steel wire rope mesh, ring net, or equivalent system approved by the ENGINEER. Mesh shall be corrosion resistant and shall include all required connection and fastening components.

E. Concrete for footings, if required, shall conform to Section 03 30 00.

PART 3 - EXECUTION

3.01 GENERAL REQUIREMENTS

A. The CONTRACTOR shall verify all field conditions, including grades, slope geometry, obstructions, and subsurface conditions prior to installation. Any discrepancies shall be reported to the ENGINEER.

B. Install rockfall barrier components in accordance with manufacturer instructions and the approved submittals.

C. All disturbed areas shall be restored to preconstruction conditions.

END OF SECTION

SECTION 31 3700 – RIP-RAP

PART 1 – GENERAL

1.01 THE REQUIREMENT

A. The WORK includes excavation, grading, and installation of riprap, boulders, soil riprap, and bedding placed at the locations shown on the DRAWINGS. The materials to be used and the construction of such structures shall be as specified herein.

1.02 REFERENCE SPECIFICATIONS, CODES AND STANDARDS

A. Reference Standards:
   1. American Association of State Highway and Transportation Officials (AASHTO):
      a. T85, Standard Method of Test for Specific Gravity and Absorption of Coarse Aggregate.
      b. T96, Standard Method of Test for Resistance to Degradation of Small-Size Coarse Aggregate by Abrasion and Impact in the Los Angeles Machine.
      c. T103, Standard Method of Test for Soundness of Aggregates by Freezing and Thawing.
      d. T104, Standard Method of Test for Soundness of Aggregate by Use of Sodium Sulfate or Magnesium Sulfate.
      e. T248, Reducing Field Samples of Aggregate Test Size.
   2. ASTM International (ASTM): D698, Standard Test Methods for Laboratory Compaction Characteristics of Soil Using Standard Effort (12 400 ft-lbf/ft3 (600 kN-m/m3)).

1.03 SUBMITTALS

A. Submittals shall be furnished in accordance with Section 01 3300 – Submittal Procedures.

B. CONTRACTOR shall submit certified laboratory test certificates for all items required in this section.

PART 2 – PRODUCTS

2.01 MATERIALS

A. Riprap
   1. Riprap used shall be the type designated on the drawings and shall conform to the following:

Riprap Designation	% Smaller than Given Size by Weight	Intermediate Rock Dimension (inches)	d_{50}* (inches)
Type VL	70 - 100 50 - 70 35 - 50 2 - 10	12 9 6 2	6**
Type L	70 - 100 50 - 70 35 - 50 2 - 10	15 12 9 3	9**
Type M	70 - 100 50 - 70 35 - 50 2 - 10	21 18 12 4	12**

Riprap Designation	% Smaller than Given Size by Weight	Intermediate Rock Dimension (inches)	d_{50}* (inches)
Type H	70 - 100 50 - 70 35 - 50 2 - 10	30 24 18 6	18
Type VH	70 - 100 50 - 70 35 - 50 2 - 10	41 33 24 9	24

*d_{50} = Mean Particle Size
**Mix VL, L and M riprap with 35% topsoil (by volume) and bury it with 4 to 6 inches of topsoil, all vibration compacted, and revegetate.

2. The riprap minimum thickness shall be 1.5 times the maximum aggregate diameter for d_{50} of 15 inches or less; 1.2 times the maximum aggregate size for d_{50} greater than 15 inches.

D_{50} (in)	D_{max} (in)	Minimum Blanket Thickness (in)
4	6	9
6	9	14
9	14	20
12	18	27
15	22	32
18	27	32
21	32	38
24	36	43

3. Neither width nor thickness of a single stone of riprap shall be less than one-third (1/3) of its length.
4. The specific gravity of the riprap shall be two and one-half (2.5) or greater.
5. Riprap specific gravity shall be according to the bulk-saturated, surface-dry basis, in accordance with AASHTO T85.
6. The bulk density for the riprap shall be 1.3 ton/cy or greater.
7. The riprap shall have a percentage loss of not more than forty percent (40%) after five hundred (500) revolutions when tested in accordance with AASHTO T96.
8. The riprap shall have a percentage loss of not more than ten percent (10%) after five (5) cycles when tested in accordance with AASHTO T104 for ledge rock using sodium sulfate.
9. The riprap shall have a percentage loss of not more than ten percent (10%) after twelve (12) cycles of freezing and thawing when tested in accordance with AASHTO T103 for ledge rock, procedure A.
10. Rock shall be free of calcite intrusions.
11. Gradation:
    a. Each load of riprap shall be reasonably well graded from the smallest to the largest size specified.
    b. Stones smaller than the two to ten percent (2 to 10%) size will not be permitted in an amount exceeding ten percent (10%) by weight of each load.
    c. Control of gradation shall be by visual inspection. However in the event ENGINEER determines the riprap to be unacceptable, ENGINEER shall pick two (2) random truckloads to be dumped and checked for gradation.
        1) Mechanical equipment and labor needed to assist in checking gradation shall be provided by CONTRACTOR at no additional cost.

12. Color:
    a. The color of the riprap shall be gray with gray/blue hues or other acceptable colors approved by ENGINEER prior to delivery to the PROJECT site.
    b. Color shall be consistent on the entire PROJECT and shall match the color of rock to be used for all other portions of the WORK.
13. Broken concrete or asphalt pavement shall not be acceptable for use in the WORK.

B. BOULDERS

1. Boulders used shall be the type designated on the DRAWINGS and shall conform to the following:

Boulder Classification	Nominal Size (inches)	Range in Smallest Dimension of Individual Rock Boulders (inches)	Maximum Ratio of Largest to Smallest Rock Dimension of Individual Boulders
B18	18	17-20	1.50
B24	24	22-26	1.50
B30	30	28-32	1.50
B36	36	34-38	1.50
B42	42	40-44	1.50
B48	48	45-51	1.50

2. The specific gravity of the boulders shall be two and one-half (2.5) or greater.
3. Boulder specific gravity shall be according to the bulk-saturated, surface-dry basis, in accordance with AASHTO T85.
4. The bulk density for the boulder shall be 1.3 ton/cy or greater.
5. The boulders shall have a percentage loss of not more than forty percent (40%) after five hundred (500) revolutions when tested in accordance with AASHTO T96.
6. The boulders shall have a percentage loss of not more than ten percent (10%) after five (5) cycles when tested in accordance with AASHTO T104 for ledge rock using sodium sulfate.
7. The boulders shall have a percentage loss of not more than ten percent (10%) after twelve (12) cycles of freezing and thawing when tested in accordance with AASHTO T103 for ledge rock, procedure A.
8. Rock shall be free of calcite intrusions.
9. Color:
    a. The color of the boulders shall be gray with gray/blue hues or other acceptable colors approved by ENGINEER prior to delivery to the PROJECT site.
    b. Color shall be consistent on the entire PROJECT and shall match the color of rock to be used for all other portions of the WORK.

C. SOIL RIPRAP

1. Rock requirements are to comply with riprap as specified in Article Materials.
2. The soil material shall be native or topsoil and mixed with sixty-five percent (65%) riprap and thirty five percent (35%) soil by volume.
3. Soil riprap shall consist of a uniform mixture of soil and riprap without voids.

D. BEDDING:

1. Gradation for Granular Bedding:

Percent by Weight Passing Square-Mesh Sieves		
U.S. Standard Sieve Size	**Type I**	**Type II**
3 inches	-	90-100
1 ½ inches	-	-
¾ inches	-	20-90
3/8 inches	100	-
No. 4	95-100	0-20
No. 16	45-80	-
No. 50	10-30	-
No. 100	2-10	-
No. 200	0-2	0-3

2. Granular bedding designation and total thickness of bedding shall be as follows.

	Minimum Bedding Thickness (in)		
	Fine Grained Soils		**Course Grained Soils**
Rip-rap Designation	**Type I**	**Type II**	**Type II**
VL, L	4	4	6
M	4	4	6
H	4	6	8
VH	4	6	8

May substitute one 12-inch layer of Type II bedding.

Fifty percent or more by weight retained on the #40 sieve.

[3] Granular bedding shall meet the same requirements for specific gravity, absorption, abrasion, sodium sulfate soundness, calcite intrusion, and freeze-thaw durability as required for riprap.

a. Broken concrete asphalt pavement or sledge, shall not be acceptable for use in the WORK. Rounded river rock is not acceptable unless specifically designated on the DRAWINGS.
b. The requirements for the wear test in AASHTO T96 shall not apply.

E. FEATURE BOULDERS:

1. Feature Boulders shall consist of the same material as boulders, differing only by size.
2. Feature Boulders shall meet the same requirements for specific gravity, absorption, abrasion, sodium sulfate soundness, calcite intrusion, and freeze-thaw durability as required for boulders
3. Feature Boulders shall have a minimum dimension of four (4) feet, or as shown on the DRAWINGS.

F. NON-WOVEN GEOTEXTILE FILTER:

1. Where called out in the DRAWINGS, A nonwoven geotextile filter (aka Filter fabric, geotextile liner, filter cloth) shall be installed according to manufacturer's requirements and shall have properties as identified below:

Aggregate Size (In)	Grab Tensile Strength (min) ASTM D4632 (lbs)	Trapezoidal Tear Strength (min) ASTM D4533 (lbs)	Puncture Strength (min) ASTM D4833 (lbs)	Mullen Burst Strength (min) ASTM D4833 (lbs)	Permittivity ASTM D4491 (1/s)	Apparent Opening Size (max) ASTM D4751 (mm)
<16	200	75	75	200	0.5	0.21
16-24	270	100	100	400	0.5	0.21
>24	AS DIRECTED BY ENGINEER					

G. GABION:

1. Gabions shall be made of hexagonal triple twist mesh with heavily galvanized steel wire. The maximum linear dimension of the mesh opening shall not exceed 4 ½ inches and the area of the mesh opening shall not exceed 10 square inches.
2. Gabions shall be fabricated in such a manner that the sides, ends, and lid can be assembled at the construction site into a rectangular basket of the specified sizes. Gabions shall be of single unit construction and shall be installed according to manufacturer's recommendations.
3. The area on which the gabion is to be installed shall be graded as shown on the drawings. Foundation conditions shall be the same as for placing rock riprap, and filter cloth shall be placed under all gabions. Where necessary, key, or tie, the structure into the bank to prevent undermining of the main gabion structure.

PART 3 – EXECUTION

3.01 PREPARATION

A. Channel slope, bottom, or other areas that are to be protected with riprap, boulders or soil riprap shall be free of brush, trees, stumps, and other objectionable material and be graded to a smooth compacted surface as shown on the DRAWINGS.

B. CONTRACTOR shall excavate areas to receive riprap to the subgrade as shown on the DRAWINGS accounting for granular bedding.

C. CONTRACTOR shall excavate areas to receive boulders or soil riprap to the specified depth (bedding material is not required for boulders and soil riprap).

D. Subgrade Materials:

1. The subgrade materials shall be stable.
2. If unsuitable materials are encountered, they shall be removed and replaced in accordance with Section 02200 – Earthwork, for subgrade that has been excavated in undisturbed soil.

E. Additional Compaction:

1. Additional compaction shall not be required unless specified by ENGINEER.
2. When subgrade is built up with embankment material it shall be compacted to ninety five percent (95%) maximum density (ASTM D698).

F. Bedding:

1. After an acceptable subgrade is established, bedding shall be immediately placed and leveled to the specified elevation on the DRAWINGS.

2. Immediately following the placement of the bedding material, the riprap shall be placed.
3. If bedding material is disturbed for any reason, it shall be replaced and graded at CONTRACTOR's expense.
4. Contamination:
   a. In-place bedding materials shall not be contaminated with soils, debris or vegetation before the riprap is placed.
   b. If contaminated, the bedding material shall be removed and replaced at CONTRACTOR's expense.

3.02 PLACEMENT

A. RIPRAP

1. Following acceptable placement of granular bedding, riprap placement shall commence as follows:
   a. Machine Placed Riprap:
      1) Riprap shall be placed on the prepared slope or channel bottom areas in a manner which will produce a reasonably well graded mass of stone with the minimum practicable percentage of voids.
      2) Riprap shall be machine placed, unless otherwise stipulated in the DRAWINGS or SPECIFICATIONS.
      3) It is the intent of these SPECIFICATIONS to produce a fairly compact riprap protection in which all sizes of material are placed in their proper proportions. Unless otherwise authorized by ENGINEER, the riprap protection shall be placed in conjunction with the construction of embankment or channel bottom with only sufficient delay in construction of the riprap protection, as may be necessary, to allow for proper construction of the portion of the embankment and channel bottom which is to be protected.
   b. Slope Placement:
      1) When riprap is placed on slope, placement shall commence at the bottom of the slope working up the slope.
   c. The entire mass of riprap shall be placed on either channel slope or bottom so as to be in conformance with the required gradation mixture and to line, grade, and thickness shown on the DRAWINGS.
   d. Riprap shall be placed to full course thickness at one operation and in such a manner as to avoid displacing the underlying bedding material. Placing of riprap in layers, or by dumping into chutes, or by similar methods shall not be permitted.
   e. All material used for riprap protection for channel slope or bottom shall be placed and distributed such that there shall be no large accumulations of either the larger or smaller sizes of stone. Some hand placement may be required to achieve this distribution.
   f. The basic procedure shall result in larger materials flush to the top surface with faces and shapes arranged to minimize voids, and smaller material below and between larger materials.
   g. Surface grade shall be a plane or as indicated, but projections above or depressions under the finished design grade by more than ten percent (10%) of the rock layer thickness shall not be allowed.
   h. Smaller rock shall be securely locked between the larger stone. It is essential that the material between the larger stones not be loose or easily displaced by flow or by vandalism.
   i. The stone shall be consolidated by the bucket of the backhoe or other means that will cause interlocking of the material.
   j. All rock is to be placed in a dewatered condition beginning at the toe of the slope or other lowest point.

k. CONTRACTOR shall maintain the riprap protection until accepted. Any material displaced for any reason shall be replaced to the lines and grades shown on the DRAWINGS at no additional cost to OWNER. If the bedding materials are removed or disturbed, such material shall be replaced prior to replacing the displaced riprap.

2. Hand Placed Riprap:
   a. Hand placed riprap shall be performed during machine placement of riprap and shall conform to all the requirements of PART 2, above.
   b. Hand placed riprap shall also be required when the depth of riprap is less than two (2) times the nominal stone size, or when required by the DRAWINGS or SPECIFICATIONS.
   c. After the riprap has been placed, hand placing or rearranging of individual stones by mechanical equipment shall be required to the extent necessary to secure a flat uniform surface and the specified depth of riprap, to the lines and grades as shown on the DRAWINGS.
3. Soil Replacement Over Riprap:
   a. Where riprap is designated to be buried, place onsite excavated material that is free from trash and organic matter in riprap voids by washing and rodding.
   b. Prevent excessive washing of material into stream.
   c. When voids are filled and the surface accepted by ENGINEER, place a nominal six (6) inches of topsoil over the area, or as designated on the DRAWINGS.
   d. Fine grade, seed, and mulch per the SPECIFICATIONS.

B. BOULDERS
1. Following excavation and acceptance of subgrade by ENGINEER Boulder placement shall commence as follows:
   a. Boulders shall be placed on the prepared subgrade in a manner which will minimize voids.
   b. Voids between boulders exceeding 4" shall be chinked.

C. SOIL RIPRAP
1. Adjacent stockpiles of riprap and soil shall be created and mixing done at the stockpile location, not at the location where soil riprap is to be placed.
2. Mix thirty-five percent (35%) soil by volume with stockpiled riprap, using additional moisture and control procedures that ensure a homogenous mixture; where the soil fills the inherent voids in the riprap without displacing riprap.
3. With prior approval of ENGINEER, layering the riprap and soil instead of premixing may be allowed if the native soil is granular.
4. Place a first layer of smaller soil riprap of approximate d50 thickness. Then place the top layer with surface rocks that are largely d50 or greater, filling voids as necessary with smaller planted riprap. Create a smooth plane as described in Paragraph A.
5. The mixture shall be consolidated by large vibratory equipment or backhoe bucket to create a tight, dense interlocking mass.
6. The soil shall be further wetted to encourage void filling with soil.
7. Any large voids shall be filled with rock and small voids filled with soil.
8. Excessively thick zones of soil prone to washing away shall not be created (for example, no thicknesses greater than six (6) inches).
9. For buried soil riprap, the top surface shall be covered with four (4) inches of topsoil such that no rock points are protruding.
10. The final surface shall be thoroughly wetted for good compaction, smoothed and compacted by vibrating equipment; the surface shall then be hand raked to receive planting or seeding.

D. FEATURE BOULDERS
   1. Feature Boulders serve an aesthetic function and as such shall be placed and rotated into final position as directed by ENGINEER in order to achieve the desired result.

3.03 REJECTION OF WORK AND MATERIALS:

A. ENGINEER will reject placed riprap, boulders, soil riprap and bedding that do not conform to this section. CONTRACTOR shall immediately remove and re-lay the riprap, boulders, soil riprap and bedding to conform to SPECIFICATIONS.

B. Riprap, boulders, soil riprap and bedding shall be rejected, which is either delivered to the job site or placed, that does not conform to this section.

C. Rejected riprap, boulders, soil riprap and bedding shall be removed from the PROJECT site by CONTRACTOR at CONTRACTOR's expense.

END OF SECTION

SECTION 32 1216 – ASPHALT PAVING

PART 1 – GENERAL

1.01 SUMMARY

A. Section includes finished construction and placement of asphalt paving, including materials, accessories, subgrade preparation, and finishing.

1.02 REFERENCES

A. MAG Standard Detail 321 – Placement and Construction of Asphalt Concrete Pavement

B. MAG Standard Detail 710 – Asphalt Concrete

PART 2 – PRODUCTS

2.01 ASPHALT BINDER

A. The asphalt binder shall be designed for use in desert climate conditions as specified in MAG Standard Detail 710 – Asphalt Concrete.

2.02 AGGREGATE

A. Coarse and fine aggregates shall conform to the requirements of MAG Standard Detail 710 – Asphalt Concrete.

PART 3 – EXECUTION

3.01 INSTALLATION

A. Installation, placement, compaction, and testing shall be in accordance with MAG Standard Detail 321 – Placement and Construction of Asphalt Concrete Pavement.

END OF SECTION

SECTION 32 1313 – CONCRETE PAVING

PART 1 – GENERAL

1.01 SUMMARY

A. Section includes finished pavement of constructed cement concrete, including materials and accessories, formwork, subgrade preparation, joints, and finishing.

1.02 REFERENCES

A. MAG Standard Detail 324 – Portland Cement Concrete Pavement

B. MAG Standard Detail 725 – Portland Cement Concrete

C. MAG Standard Detail 726 – Concrete Curing Materials

D. MAG Standard Detail 727 – Steel Reinforcement

E. MAG Standard Detail 729 – Expansion Joint Filler

F. ASTM A615/A615M – Standard Specification for Deformed and Plain Carbon-Steel Bars for Concrete Reinforcement

1.03 SUBMITTALS

A. Submittals shall be in accordance with Section 01 3300 – Submittal Procedures.

B. Samples: Submit samples when requested.

C. Shop Drawings:
   1. Submit drawings indicating the locations of all joints in concrete, including construction joints, expansion joints, isolation joints, and weakened plane or contraction joints.
   2. Submit drawings of reinforcing steel, tie bars, and connecting dowels.

PART 2 – PRODUCTS

2.01 CONCRETE MATERIALS

A. General: Concrete materials, additives, and accessories required for the Work shall be in accordance with MAG Standard Detail 725 – Portland Cement Concrete.

B. Cementitious Material: ASTM C150, Type III.

C. Aggregates: ASTM C33.
   1. Aggregates shall be provided from a single source.

D. Water: Potable water meeting the requirements of ASTM C1602.

E. Admixtures and Additives: Admixtures and additives shall not be used unless identified in the approved mix design or authorized by the Engineer.

2.02 CONCRETE MIXTURES

A. Concrete mix design shall comply with Table 725-1, Class AA, 4000 psi compressive strength, as outlined in MAG Standard Detail 725 – Portland Cement Concrete.

2.03 STEEL REINFORCEMENT

A. Reinforcing bars: ASTM A614/A615M, Grade 60, deformed.

B. Steel reinforcing materials shall be in accordance with MAG Standard Detail 727 – Steel Reinforcement and these Specifications.

2.04 CURING MATERIALS

A. Curing materials shall consist of curing paper, polyethylene film, or liquid membrane forming compounds which inhibit moisture loss and reduce temperature rise.

B. Curing materials shall conform to the requirements of MAG Standard Detail 726 – Concrete Curing Materials.

2.05 JOINT MATERIALS

A. Joint sealant shall be poured-type and shall conform to the requirements of MAG Standard Detail 729 – Expansion Joint Filler. Deviations from the standard detail shall be approved by the Engineer.

PART 3 – EXECUTION

3.01 INSTALLATION

A. Installation, shaping, forming, finishing, curing, and testing of concrete paving shall be in accordance with MAG Standard Detail 324 – Portland Cement Concrete Paving.

3.02 SUBGRADE PREPARATION

A. In accordance with MAG Standard Detail 324 – Portland Cement Concrete Paving.

3.03 PROTECTION OF PAVEMENT

A. Contractor shall be responsible for taking adequate steps to protect concrete placed during inclement weather, such as rain or hot or cold weather. Any damage resulting from exposure to rain or extreme temperatures shall be removed and replaced at the Contractor's expense.

B. No traffic or equipment shall be permitted on the pavement until the concrete has reached a compressive strength of 3500 psi.

END OF SECTION

SECTION 32 1600 – CURBS, GUTTERS, SIDEWALKS, AND DRIVEWAYS

PART 1 - GENERAL

1.01 SUMMARY

A. Section Includes: Concrete curbs, gutters, sidewalks, valley gutters, driveways, access ramps, and alley intersections.

1.02 SYSTEM DESCRIPTION

A. Performance Requirements: Construct various types of concrete curb, gutter, sidewalk, driveways, and alley intersections to dimensions and details indicated on the Drawings.

1.02 REFERENCES

A. MAG Standard Detail 324 – Portland Cement Concrete Pavement

B. MAG Standard Detail 725 – Portland Cement Concrete

C. MAG Standard Detail 726 – Concrete Curing Materials

1.03 SUBMITTALS

A. Submittals shall be made in accordance with Section 01 3300 – Submittal Procedures.

B. Product Data: Submit data completely describing products.

C. Samples: Submit samples when requested.

PART 2 - PRODUCTS

2.01 MATERIALS

A. Concrete: 4000 psi, conforming to the applicable requirements of these Specifications.

B. Curb Finishing Mortar: 1 part Portland cement to two parts sand.

C. Form Release Material: Light oil or other releasing agent of type which does not discolor concrete or interfere with the application of finishing mortar to curb tops and faces.

D. Joint Materials:
   1. Expansion: Comply with requirements as specified in these Specifications.
   2. Construction: Steel dividers or plastic inserts.

PART 3 - EXECUTION

3.01 EXAMINATION

A. Verification of Conditions: Verify field conditions, including subgrade condition and interferences, before beginning construction.

3.02 PREPARATION

A. Surface Preparation:
   1. Subgrade:
      a. Construct and compact true to grades and lines indicated on the Drawings and requirements as specified in these Specifications.
      b. Remove soft or unsuitable material to depth of not less than 6 inches below subgrade elevation and replace with satisfactory material.
   2. Forms and Subgrade: Water immediately in advance of placing concrete.

3.03 INSTALLATION

A. Special Techniques:
   1. CONTRACTOR's Option:
      a. Construct concrete curbs and gutters by conventional use of forms, or by means of curb and gutter machine when acceptable to the ENGINEER.
      b. When use of machines designed specifically for work of this Section are accepted by the ENGINEER, results must be equal to or better than those produced by use of forms.
      c. Applicable requirements of construction that apply to use of forms also apply to use of machines.
      d. Discontinue use of machines when results are not satisfactory to the ENGINEER.

B. Forms:
   1. Carefully set to line and grade and securely stake in position forms conforming to dimensions of items to be constructed.
   2. Thoroughly clean prior to each use and coat with form releasing material.

C. Expansion and Contraction Joints:
   1. Expansion Joints:
      a. Construct vertically, and at right angles to centerline of street and match joints in adjacent pavement or sidewalks.
      b. Constructed at radius points, driveways, alley entrances, and at adjoining structures.
      c. Fill joints with expansion joint filler material.
   2. Contraction Joints:
      a. Constructed not more than 15 feet apart.
      b. Make joints of construction joint material, scoring or saw cutting to depth of not less than 1-1/2 inches, and matching joints in adjacent pavement or sidewalk.

D. Concrete:
   1. Placing:
      a. Thoroughly spade concrete away from forms so that no rock pockets exist next to forms and so that no coarse aggregate will show when forms are removed.
   2. Compacting:
      a. Compact by mechanical vibrators accepted by the ENGINEER.
      b. Continue tamping or vibrating until mortar flushes to surface and coarse aggregate is below concrete surface.
   3. Form Removal:
      a. Front Form Faces: Do not remove before concrete has taken initial set and has sufficient strength to carry its own weight.
      b. Gutter and Rear Forms: Do not remove until concrete has hardened sufficiently to prevent damage to edges. Take special care to prevent damage.
   4. Finishing and Curing: Comply with requirements of these Specifications, except as modified here:
      a. As soon as curb face forms are stripped, apply finishing mortar to the top and face of curb and trowel to a smooth, even finish. Finish with fine haired broom in direction of work.
      b. Where curb is installed without integral gutter, extend finish 2 inches below grade.
      c. Edge concrete at expansion joints to 1/4-inch radius.

d. Flow lines of gutters shall be troweled smooth 4 inches out from curb face for integral curb and gutter and 4 inches on both sides of flowline for gutters without curbs.

E. Backfilling: Unless otherwise specified, backfill behind curbs, gutters, or sidewalks with soil native to area and to lines and grades indicated on the Drawings.

3.04 FIELD QUALITY CONTROL

A. Tests:
1. Curbs, Gutters, and Valley Gutters:
a. Test face, top, back, and flow line with 10-foot straight edge or curve template longitudinally along surface.
b. Correct deviations in excess of ¼-inch.
2. Gutters:
a. Frequency of Testing: When required by the ENGINEER, where gutters have slope of 0.8 foot per hundred feet or less, or where unusual or special conditions cast doubt on capability of gutters to drain.
b. Test Method: Establish flow in length of gutter to be tested by supplying water from hydrant, tank truck, or other source.
c. Required Results:
1) 1 hour after supply of water is shut off, inspect gutter for evidence of ponding or improper shape.
2) In event water is found ponded in gutter to depth greater than 1/2 inch, or on adjacent asphalt pavement, correct defect or defects in manner acceptable to the ENGINEER without additional cost to the Contract.

3.05 ADJUSTING

A. Repair portions of concrete damaged while stripping forms or, when damage is severe, replace such work at no additional cost to the Contract. Evidence of repairs shall not be noticeable in the finished product.

B. Remove and replace sections of work deficient in depth or not conforming to requirements indicated on the Drawings and specified in the Specifications at no additional cost to the Contract. Removal and replacement shall be the complete section between two joints.

END OF SECTION

SECTION 32 3113 – CHAIN LINK FENCES AND GATES

PART 1 - GENERAL

1.01 THE REQUIREMENT

A. The CONTRACTOR shall furnish all tools, equipment, materials, and supplies and shall perform all labor required to complete the WORK as indicated on the Drawings and specified herein.

B. This Section covers the work necessary for the chain link fence and gate(s), including removal of a portion of existing fence and reinstalling the chain link fence and gate(s) as shown on the Drawings and specified in the Contract Documents.

C. American Iron and Steel (AIS) requirement applies to this Section. All iron and steel products used in this project must be produced in the United States.

1.02 REFERENCE SPECIFICATIONS, CODES, AND STANDARDS

A. Reference MAG Standard Details and Specifications.

B. All Work specified herein shall conform to or exceed the applicable requirements of the referenced portions of the following publications to the extent that the provisions thereof are not in conflict with other provisions of these Specifications.

C. Comply with the applicable editions of the following codes, regulations and standards.
   1. Industry Standards:
      a. ASTM F567: Installation of Chain-Link Fence
      b. SSPWC Section 206-6 “Green Book”: Standard Specifications for Public Works Construction, Chain Link Fence
      c. SSPWC Section 304-3 “Green Book”: Standard Specifications for Public Works Construction, Chain Link Fence

D. Comply with the MAG Standard Details and Specifications, SPPWC, Standard Plans for Public Works Construction, as referenced in this Specification.

1.03 CONTRACTOR SUBMITTALS

A. Submittals shall be made in accordance with the Section 01 3300 – Submittal Procedures.

1.04 QUALITY ASSURANCE

A. General
   1. Comply with the requirements specified herein and the applicable reference Specifications of the General Requirements.
   2. Contractor shall adhere to OSHA, state, and local safety guidelines, laws, rules, and regulations.

1.05 WARRANTY

A. Provide a minimum of a five-year warranty.

PART 2 - PRODUCTS

2.01 GENERAL

A. All materials and fittings shall be in conformance with MAG Standard Detail 160 and Specification Section 420, SSPWC Section 206-6 Chain Link Fence, or as otherwise shown on the Drawings.

B. Salvaged material from the existing fence shall be undamaged and acceptable to the ENGINEER prior to reuse or reinstallation. Any material not reused shall be removed as directed by the ENGINEER.

C. Like items of materials provided hereunder shall be the end products of one manufacturer in order to achieve standardization for appearance, maintenance, and replacement.

2.02 FABRIC

A. Galvanized Fabric:
   1. Chain link fabric shall conform to the requirements of SSPWC Section 206-6.3.1.

B. Polyvinyl Chloride (PVC)-Coated Fabric:
   1. PVC-coated chain link fabric shall be in conformance with SSPWC Section 206-6.3.2.

2.03 POSTS, RAILS AND BRACES

A. The materials for posts, rails, and braces shall be in conformance with SSPWC Section 206-6.2.

2.04 TENSION WIRES AND FABRIC TIES

A. Tension wires and ties used to fasten the fabric to posts, rails, and gate framed shall be in conformance with SSPWC Section 206-6.4.

2.05 TRUSS OR TENSION RODS

A. Truss or tension rod used in construction shall be in conformance with SSPWC Section 206-6.5.

2.06 FITTINGS

A. All required fittings and hardware shall be galvanized and in conformance with SSPWC Section 206-6.6.

2.07 BARBED WIRE

A. Barbed wire shall be in conformance with SSPWC Section 206-6.7.

2.08 REPAIR OF DAMAGED COATINGS

A. Repairs to abraded or otherwise damaged zinc coating shall be made in conformance with SSPWC Section 206-6.8.

2.09 GATES

A. Gates shall be swing or sliding as indicated, complete with latches, stops, keepers, hinges, or rollers and roller tracks.

B. Gate frames shall be constructed of tubular members welded at all corners or assembled with fittings. On steel, welds shall be painted with zinc-based paint. Where corner fittings are used, gates shall have truss rods of 5/16-inch minimum nominal diameter to prevent sag or twist. Gate leaves shall have vertical intermediate bracing as required, spaced so that no members are more than 8 feet apart. Gate leaves 10 feet or over shall have a horizontal brace or one 5/16-inch minimum diagonal truss rod. When fence has barbed wire top, the end members of the gate frames shall be extended 1 foot above the top horizontal member to which three strands of barbed wire, uniformly spaced, shall be attached by use of bands, clips, or hook bolts.

C. Fabricate frames of standard weight pipe 1.90 inches outside diameter, weight 2.72 pounds per linear foot.

D. Gate fabric shall be the same type as used in the fence construction. The fabric shall be attached securely to the gate frame at intervals not exceeding 15 inches.

E. Gate hinges shall be of adequate strength for gate and with large bearing surfaces for clamping in position. The hinges shall not twist or turn under the action of the gate. The gates shall be capable of being opened and closed easily by one person.

F. Gate latches, stops, and keepers shall be provided for all gates. Latches shall have a plunger-bar arranged to engage the center stop, except that for single gates of openings less than 10 feet wide a forked latch may be provided. Latches shall be arranged for locking with padlocks. Center stops shall consist of a device arranged to be set in concrete and to engage a plunger-bar of the latch of double gates. No stop is required for single gates. Keepers shall consist of a mechanical device for securing the free end of the gate when in the full open position.

1. Double Gates: Size and configuration shall be as indicated. Provide gate stops for all double gates, consisting of mushroom type or flush plate with anchors. Set in concrete to engage the center drop rod or plunger bar. Provide locking device and padlock eyes as an integral part of the latch, requiring one padlock for locking both gate leaves.
2. Sliding Gates: Provide manufacturer's standard heavy-duty track, ball-bearing hanger sheaves, overhead framing and supports, guides, stays, bracing, and accessories as required. All sliding gates shall be rolling, cantilever slide, or overhead (top) suspended, as indicated on Drawings.

G. Rolling gate track rollers shall be malleable iron or heavy pressed steel construction, with provision for regular grease lubrication. Ground rollers shall have malleable iron or heavy pressed-steel hubs with similar provision for lubrication. Gate track shall be Schedule 40 pipe, firmly attached to support posts on 7-foot-maximum centers. Gates more than 8 feet in height shall have three tracks. Rolling gate frames shall be constructed similar to swing gates except diagonal bracing shall reflect different support type.

H. Cantilever gate rollers shall have heavy malleable rollers, needle or ball bearings with fittings for regular lubrication. Maximum spacing of support posts is 10 feet. Additional weight-supporting posts with lower roller shall be provided on 10-foot-maximum centers. Support posts shall be 4 inches in diameter, Schedule 40, set at 36 inches minimum depth. Top and lower rails of gate shall be 2-3/8 inches in OD, Schedule 40 pipe. Vertical support posts shall be on 6-foot maximum spacing, 1-7/8-inch OD, Schedule 40 pipe, all diagonal bracing 1-5/8-inch OD, Schedule 40 pipe, all connections welded and painted.

I. Keeper: Provide keeper for all vehicle gates that automatically engages the gate leaf and holds it in the OPEN position until manually released.

2.10 REMOVABLE FENCE PANELS

A. Removable fence panels shall be provided as indicated on the Drawings. The total length of any removable fence section shall be divided into equal removable fence panels with panel length not to exceed 10 feet. The posts on either side of removable fence panels shall be hot-dip galvanized pipe, 3 inches OD, 5.71 pounds per linear foot.

2.11 CONCRETE

A. Materials as specified in these Specifications. Proportions shall be 1:2:4. Compressive strength shall not be less than 2,000 psi at 28 days.

PART 3 - EXECUTION

3.01 INSTALLATION

A. Installation of fencing shall meet the requirements of ASTM F567.

B. Fence construction shall be in conformance with MAG Standard Detail 160 and Specification Section 420, SSPWC Section 304-3.2

C. Installation of gates shall be in conformance with the manufacturer’s installation instructions, MAG Standard Detail 160 and Specification Section 420, and SSPWC Section 304-3.3.

3.02 REMOVAL AND RESETTING OF EXISTING FENCE

A. All accessories shall be removed carefully and all materials stored in a safe place until required for resetting. The CONTRACTOR shall provide all new material necessary to replace lost or damaged material and as required for a complete and satisfactory installation. In general, the salvaged fencing shall be reinstalled as specified for new material. All concrete shall be removed from posts before they are reset. The CONTRACTOR may furnish all new materials, rather than salvage and reuse the existing fence.

3.03 CLEANUP

A. Upon completion of the fence installation, clean up all waste material resulting from the operation. The clean-up shall be subject to acceptance by the ENGINEER.

END OF SECTION

SECTION 33 0505.31 – HYDROSTATIC TESTING

PART 1 – GENERAL

1.01 THE REQUIREMENT

A. The CONTRACTOR shall clean, flush, and test hydraulic structures and appurtenant piping, in accordance with ACI 350.1/350.1R Tightness Testing of Environmental Concrete Structures. However, if any local or state ordinances/regulations exist regarding this test procedure the ENGINEER should be notified immediately. The ENGINEER shall review the regulation and determine if it is applicable to the project prior to commencement of construction. Following the review, the most stringent will govern.

B. The ACI 350.1/350.1R standard hydrostatic test (HST) criteria for these hydraulic structures are expressed as the maximum allowable percent loss per day of the test water volume. The designation for these structures is HST-050 or 0.050% per day of volume loss for all the structures.

C. It is the intent of this specifications Section to compliment the requirements of ACI 350.1/350.1R not to override them. All testing requirements shall be per section 1.01A.

1.02 SUBMITTALS

A. Furnish per Section 01 3300 – Submittal Procedures

B. Testing Plan, Methods, and Schedule for preliminary and final testing

C. Testing Documentation Recording Forms for preliminary and final testing

D. Methods of leak repair and product information

E. Upon completion of the test submit the completed Testing Documentation Recording Form showing results of test, dates etc. as required by the form for preliminary and final testing.

PART 2 – PRODUCTS

2.01 MATERIALS REQUIREMENTS

A. Temporary valves, bulkheads, or other water control equipment and materials shall be as determined by the CONTRACTOR subject to the ENGINEER's review. No materials shall be used which would be injurious to the facility or its future function.

PART 3 – EXECUTION

3.01 GENERAL

A. The CONTRACTOR shall develop and submit for review a form that will be used to record and document the testing as required in this Section. At a minimum, the form shall include the project name, tank description, tank size, width, height, max operating depth, total volume in gallons of water required for testing, calculating allowable loss without evaporation, recorded readings with applicable reading dates, daily weather conditions, water temperature at 18 inches, recorded evaporations and signature and date blocks for the person recording the readings and a witness. In addition, the preliminary testing form shall include space for documentation of the visual inspection of each tank wall, which shall describe any leaks. The description of the leaks shall define the type of leak and methods of resolution.

B. Water for testing will be furnished by the OWNER; however, the CONTRACTOR shall make all necessary provisions for conveying the water from the OWNER designated source to the points of use as per the Contract.

C. The initial filling of a new tank shall not exceed a rate of 4ft/hr. Filling shall be continued until the water surface is at the design maximum liquid level or 4 inches below any fixed overflow level, whichever is lower.

D. All hydraulic structures and appurtenant pressure piping shall be tested; those for potable water shall also be disinfected. Disinfection shall be accomplished by chlorination. All chlorinating and testing operations shall be done in the presence of the ENGINEER.

E. If industrial paint finishes or other protective coatings are to be applied to the interior surfaces of the hydraulic structure, such coatings shall be applied after all testing operations have been completed, unless approved by the ENGINEER. However, all construction joints in the tanks shall be caulked as per these Specifications.

3.02 TESTING OF HYDRAULIC STRUCTURES

A. General: Testing shall conform to American Concrete Institute (ACI) Standard 350.1/350.1R Tightness Testing of Environmental Engineering Concrete Structures. Tank structure testing and backfilling shall not be performed sooner than 14 days after all associated tank structural roof systems have been completed or at least 85% of design strength for all concrete elements. All pressure relief valves and wall penetrations shall be properly plugged prior to the hydrostatic test as to prevent leakage through the valve during testing. The test shall consist of filling the structure with water to the maximum operating water surface.

B. Leakage Test and Repairs:

1. After the structure has been filled to the test level, the water loss leakage test shall be performed as follows: an initial water level reading shall be made and recorded every 24 hours until the test has been completed. Concrete will be allowed to saturate for three days. After which the actual test shall begin. Measurements shall be taken every 24 hours at 2 separate locations if possible. The test period shall be at least the theoretical time required to lower the water surface 3/8-inches. assuming a loss of water at the maximum allowable rate. The test period need not be longer than five days. In uncovered or well-ventilated covered tanks evaporation and precipitation shall be measured. At the end of the test period, the water surface, temperature, evaporation, and precipitation measurements shall be recorded at the previous locations. The structure shall be considered to have passed the test if the calculated change in water volume in the tank is less that or equal to the HST-050 criteria or 0.05% of the total volume of the tank. The volume loss if necessary can be corrected for evaporation, precipitation, and temperature. The tank has failed if the loss is greater that the required criteria.
2. A restart of the test shall be required when test measurement become unreliable due to unusual precipitation or other external factors.
3. The CONTRACTOR shall be permitted to immediately retest a tank failing the test when no visible leakage is exhibited. If the tank fails the second time then the CONTRACTOR shall take other methods to determine the probable area(s) of leakage. The tank shall only be retested after the most probable area(s) of leakage are repaired. Any cracks shall be repaired before each test in accordance with applicable Sections of Division 03 – Concrete. The tanks shall be retested until they meet the required criterion.

3.03 TESTING OF APPURTENANT PIPING

A. Piping appurtenant to hydraulic structures shall be tested as specified in pertinent Sections of these Specifications and Contract Documents.

END OF SECTION

SECTION 33 0130.13 – SEWER AND MANHOLE TESTING

PART 1 - GENERAL

1.01 THE REQUIREMENT

A. Perform all pipeline flushing and testing, complete, for sanitary sewer and storm drainage system piping as specified herein and in accordance with the requirements of the Contract Documents.

B. Be responsible for providing conveyance of test water to the point of usage and also for disposal, as required, of water used in the testing operations.

1.02 REFERENCE SPECIFICATIONS, CODES, AND STANDARDS

A. Commercial Standards:

B. ASTM A746 Ductile Iron Gravity Sewer Pipe

C. ASTM F1417 Standard Test Method for Installation Acceptance of Plastic Gravity Sewer Lines Using Low-Pressure Air

1.03 SUBMITTALS

A. Submittals shall be made in accordance with Section 01 3300 – Submittal Procedures.

B. Proposed plans for testing of the sanitary sewer system. The methods used may be air or water as described herein. If water method is used then provide the water conveyance, control, and disposal. Advance written notice of its proposed testing schedule for review and concurrence of the ENGINEER shall be submitted.

PART 2 - PRODUCTS

2.01 MATERIALS REQUIREMENTS

A. Temporary valves, plugs, bulkheads, and other air pressure testing and water control equipment and materials shall be provided, subject to the ENGINEER's review. No materials shall be used which would be injurious to pipeline structure and future function. Air test gauges shall be laboratory-calibrated test gauges and shall be recalibrated by a certified laboratory at the Contractor’s expense prior to the leakage test, if required by the ENGINEER.

PART 3 - EXECUTION

3.01 GENERAL

A. Unless otherwise specified, water for testing will be furnished by OWNER; however, all necessary provisions for conveying the water from the designated source to the points of use shall be made by the CONTRACTOR.

B. Release of water from pipelines, after testing has been completed, shall be performed as reviewed by the ENGINEER.

C. All testing operations shall be performed in the presence of the ENGINEER.

3.02 TESTING OF PIPING

A. General: All gravity sewer pipes and service laterals shall be tested for exfiltration and/or infiltration and deflection, as specified. All manholes shall be tested for leakage, as specified. Manholes shall be tested prior to backfill placement. Reference applicable Sections of Division 31 – Earthwork, for pipe leak testing prior to backfill placement. All leakage tests shall be completed and approved prior to placing of permanent resurfacing. When leakage or infiltration exceeds the amount allowed by the Specifications, locate the

leaks, and make the necessary repairs or replacements in accordance with the Specifications to reduce the leakage or infiltration to the specified limits. Any individually detectable leaks shall be repaired, regardless of the results of the tests.

B. Leakage Tests: Sanitary sewer systems shall be tested for leakage as follows:
   1. Gravity sewers 24 inches or less in diameter, where difference in elevation between inverts of adjacent manholes is 10 feet or less; water exfiltration test or water infiltration test as approved. The ENGINEER may allow substitution of an air pressure test for the water exfiltration test.
   2. Gravity sewers 24 inches or less in diameter, where difference in elevation between inverts of adjacent manholes is greater than 10 feet: air pressure test or water infiltration test, or as approved.
   3. Gravity sewers greater than 24 inches in diameter: air pressure test or water infiltration test, or as approved.
   4. Pressure sewers (force mains): water pressure test at 120% of maximum operating pressure, measured at the lowest point of the pipeline section being tested.

C. Water Exfiltration Test: Each section of sewer shall be tested between successive manholes by closing the lower end of the sewer to be tested and the inlet sewer of the upper manhole with stoppers. The pipe and manhole shall be filled with water to a point 4 feet above the centerline of the sewer at the center of the upper manhole; or if ground water is present, 4 feet above the average adjacent ground water level, whichever is higher.
   1. The allowable leakage will be computed by the formula:

		$E = 0.000012\ LD\ (H)^{1/2}$
in which	E =	Allowable leakage in gallon per hour of sewer tested
	L =	Length of sewer and lateral connections tested, in feet
	D =	Internal diameter of the pipe in inches
	H =	Difference in elevation between the water surface in the upper manhole and the centerline of the pipe at the lower manhole; or if ground water is present above the centerline of the pipe in the lower manhole, the difference in elevation between the water surface in the upper manhole and ground water at the lower manhole.

D. Water Infiltration Test: If, in the opinion of the ENGINEER, excessive ground water is encountered in the construction of a section of the sewer, the exfiltration test for leakage shall not be used.
   1. The end of the sewer at the upper structure shall be closed sufficiently to prevent the entrance of water, and pumping of ground water shall be discontinued for at least 3 days, after which the section shall be tested for infiltration.
   2. The infiltration into each individual reach of sewer between adjoining manholes shall not exceed that allowed by the formula above, where H is the difference in the elevation between the ground water surface and the invert of the sewer at the downstream manhole.
   3. Unless otherwise specified, infiltration will be measured using measuring devices approved by the ENGINEER.

E. Water Pressure Test: Preparatory to testing, the section of the pipeline to be tested shall be filled with water and placed under a slight pressure for at least 48 hours. The pipeline shall then be brought up to the test pressure specified and maintained on the section under test for a period of not less than 4 hours.
   1. Accurate means shall be provided for measuring the quantity of water required to maintain full pressure on the line for the test period, which volume shall not exceed:

		$L = \frac{CN\ D\ (P)^{1/2}}{1850}$
in which	L =	Maximum allowable leakage in gallons per hour for the section of pipeline tested
	N =	Number of joints in length tested
	D =	Diameter of pipe in inches
	P =	Test pressure in psi
	C =	1.0 for reinforced concrete pressure pipe with rubber ring joints, cylinder type
	C =	3.0 for reinforced concrete pressure pipe with rubber joints, non-cylinder type
	C =	0.50 for cast iron pipe with mechanical or rubber gasket joints and asbestos-cement pipe
	C =	1.0 for other type of cast iron joints (calked) and other types of pipe

F. Deflection Test: All flexible and semi-rigid main line pipe shall be tested for deflection, joint displacement, or other obstruction by passing a rigid mandrel through the pipe by hand, not less than 30 days after completion of the trench backfill, but prior to permanent resurfacing. The mandrel shall be a full circle, solid cylinder, or a rigid, non-adjustable, odd-numbered leg (9-leg minimum) steel cylinder, approved by the ENGINEER as to design and manufacture. The circular cross section of the mandrel shall have a diameter of at least 95% of the specified average inside pipe diameter of the pipe and the minimum length of the circular portion of the mandrel shall be equal to the nominal diameter of the pipe. Obstructions encountered by the mandrel shall be corrected.

3.03 TESTING OF MANHOLES

A. All sewer manholes shall be hydrostatically tested for leakage after installation, but prior to being backfilled. Prior to hydrostatic testing, all manholes shall be visually inspected for leaks. All leaks or cracks shall be repaired, prior to hydrostatic testing, to the satisfaction of the ENGINEER. All pipes entering the manhole shall be sealed at a point outside the manhole walls so as to include testing of the pipe/manhole joints. The manhole shall be filled with water to a level 2 inches below the top of the frame. Safety lines shall be secured to all plugs utilized. After a period of at least one hour to allow the water level to stabilize, the manhole shall be refilled and the water level shall be checked. The water level shall again be checked after a period of 4 hours. If the water level is reduced by more than ¼-inch, the leakage shall be considered excessive, the required repairs shall be made and the manhole retested. The exterior of the manhole shall be inspected during this period for visible evidence of leakage. Visible moisture, sweating, or beads of water on the exterior of the manhole shall not be considered leakage, but any water running across the surface will be considered leakage and shall be repaired to the satisfaction of the ENGINEER regardless of the volume of water lost.

END OF SECTION

SECTION 33 0519 – DUCTILE IRON PIPE

PART 1 - GENERAL

1.01 THE REQUIREMENT

A. Provide ductile iron pipe and perform all appurtenant work, complete in place, in accordance with the Contract Documents.

1.02 REFERENCE SPECIFICATIONS, CODES AND STANDARDS

A. Commercial Standards:

ANSI/AWWA	
C104/A21.4	Cement-Mortar Lining for Ductile-Iron Pipe and Fittings for Water
C105/A21.5	Polyethylene Encasement for Ductile-Iron Piping for Water and Other Liquids
C110/A21.10	Ductile-Iron and Gray-Iron Fittings, 3 inches through 48 inches for Water and Other Liquids
C111/A21.11	Rubber-Gasket Joints for Ductile-Iron and Gray-Iron Pressure Pipe and Fittings
C115/A21.15	Flanged Ductile-Iron and Gray-Iron Pipe with Threaded Flanges
C150/A21.50	Thickness Design of Ductile-Iron Pipe
C151/A21.51	Ductile-Iron Pipe, Centrifugally Cast in Metal Molds or Sand-Lined Molds, for Water or Other Liquids
C153/A21.53	Ductile-Iron Compact Fittings, 3 inches through 12 inches for Water and Other Liquids
AWWA	
C209	Cold-Applied Tape Coatings for the Exterior of Special Sections, Connections, and Fittings for Steel Water Pipelines
C214	Tape Coating Systems for the Exterior of Steel Water Pipelines
C600	Installation of Ductile Iron Water Mains and Their Appurtenances
ASTM	
A746	Ductile Iron Gravity Sewer Pipe
C150	Specification for Portland Cement

1.03 SUBMITTALS

A. Submittals shall be made in accordance with Section 01 3300 – Submittal Procedures.

B. Shop Drawings: Submit shop drawings of pipe and fittings in accordance with the requirements in Section 01 3300 – Submittal Procedures, the requirements of the referenced standards, and the following supplemental requirements as applicable:

1. Dimensional drawings of all valves, fittings, and appurtenances.
2. For pipe 24 inches in diameter and larger, line layout and marking diagrams which indicate the specific number of each fitting and the location and the direction of each fitting in the completed line. In addition, the line layouts shall include: the pipe station and invert elevation at all changes in grade or horizontal alignment; all elements of curves and bends, both in horizontal and vertical alignment; and the limits of each reach of restrained joints, or of concrete encasement.

1.04 QUALITY ASSURANCE

A. All pipe shall be subject to inspection at the place of manufacture in accordance with the provisions of the referenced standards, as supplemented by the requirements herein.

B. During the manufacture of the pipe, the ENGINEER shall be given access to all areas where manufacturing is in process and shall be permitted to make all inspections necessary to confirm compliance with the Specifications.

PART 2 - PRODUCTS

2.01 GENERAL

A. Mortar-lined ductile iron pipe shall conform to ANSI/AWWA C151, C104 and C105, subject to the following supplemental requirements. The pipe shall be of the diameter and class noted in the Contract Documents. The pipe shall be furnished complete with rubber gaskets, with all specials and fittings provided as required under the Contract Documents.

B. Markings: Legibly mark specials 24 inches in diameter and larger in accordance with the laying schedule and marking diagram. All fittings shall be marked at each end with top field centerline.

C. Handling and Storage: The pipe shall be handled by devices acceptable to the ENGINEER, designed and constructed to prevent damage to the pipe coating/exterior. The use of equipment that might injure the pipe coating/exterior will not be permitted. Stockpiled pipe shall be suitably supported and shall be secured to prevent accidental rolling. All other pipe handling equipment and methods shall be acceptable to the ENGINEER.

D. Laying Lengths: Maximum pipe laying lengths shall be 20 feet with shorter lengths provided as required by the Drawings.

E. Finish: The pipe shall have smooth, dense interior surfaces, and shall be free from fractures, excessive interior surface crazing, and roughness.

F. Closures and Correction Pieces: Closures and correction pieces shall be provided as required so that closures may be made due to different headings in the pipe laying operation and so corrections may be made to adjust the pipe laying to conform to pipe stationing shown on the Drawings. The locations of correction pieces and closure assemblies are shown on the Drawings. Any change in location or number of said items shall be acceptable to the ENGINEER.

2.02 PIPE DESIGN CRITERIA

A. General: Ductile iron pipe shall be designed in accordance with the requirements of ANSI/AWWA C150 as applicable and as modified in this Section.

B. Pipe Wall Thickness for Internal Pressure: The pipe shall be designed with a net thickness to withstand the design pressure in accordance with the hoop stress formula.

C. Pipe Wall Thickness for External Load: The pipe shall also be designed with a net thickness to withstand external loads using ANSI/AWWA C150 Design Equation (2) with the appropriate bending moment and deflection coefficients for Laying Condition Types 4 and 5 as applicable.

D. The pipe deflection shall be checked using ANSI/AWWA C150 Design Equation (3) and the coefficients stated above. The allowable deflection shall not exceed the manufacturer’s recommended amount.

E. In lieu of ANSI/AWWA C150 Design Equation (4), the earth loads will be computed using the following 2 equations for trench or embankment loading as applicable:

1. Trench Condition:

$$W_d = C_d w B_d^2$$

Where:
- W_d = Earth Load in pounds per linear foot
- C_d = Calculation Coefficient
- Ku' = [0.13]
- w = [120] lb/ft^3
- B_d = Trench width at top of pipe, feet

2. Positive Projecting Embankment Condition:

$$W_c = C_c w B_c^2$$

Where:
- W_c = Earth Load in pounds per linear foot
- C_c = Calculation Coefficient (based on r_{sd}P of 0.25)
- Ku = [0.19]
- w = [120] lb/ft^3
- B_c = Outside diameter of pipe, feet

F. The above 2 formulas are based on a depth of cover of 10 feet or greater. For depths of cover of less than 10 feet, HS-20 live load shall be included. For depths of cover of 3 feet or less, HS-20 live load plus impact shall be included. The determination of live load and impact factors shall be as recommended by AASHTO in "Standard Specifications for Highway Bridges."

G. If the calculated deflection exceeds 0.0225 times the nominal diameter, the pipe class shall be increased.

H. Minimum Pipe Wall Thickness: In addition to the requirements of this Section, the minimum wall thickness shall be in accordance with Table 50.5 of ANSI/AWWA C150.

2.03 MATERIALS

A. Ductile Iron Pipe: Pipe materials shall conform to the requirements of ANSI/AWWA C151.

B. Cement: Cement for mortar lining shall conform to the requirements of ANSI/AWWA C104, provided, that cement for mortar lining shall be Type II or V. Cement shall not originate from kilns that burn metal-rich hazardous waste fuel, nor shall a fly ash or pozzolan be used as a cement replacement.

2.04 SPECIALS AND FITTINGS

A. Fittings for ductile iron pipe shall conform to the requirements of ANSI/AWWA C153/A21.53 for diameters 3 inches through 24 inches and shall have a minimum pressure rating of 350 psi. Ductile iron fittings larger than 24 inches shall conform to the above referenced standard with the necessary modifications for the larger size.

2.05 DESIGN OF PIPE

A. General: The pipe furnished shall be ductile iron pipe, with rubber-gasketed joints or as specified on the plans.

B. The pipe shall be designed, manufactured, tested, inspected, and marked according to applicable requirements previously stated and except as hereinafter modified, shall conform to ANSI/AWWA C151.

C. Pipe Dimensions: The pipe shall be of the diameter and class shown. The minimum wall thickness for each pipe size shall be as specified or shown.

D. Fitting Dimensions: The fittings shall be of the diameter and class shown.

E. Joint Design: Ductile iron pipe and fittings shall be furnished with mechanical joints, push-on joints, flanged joints, and restrained joints as required.
   1. Mechanical and push-on joints shall conform to ANSI/AWWA C111/A21.11.
   2. Mechanical and push on joints gaskets shall be “fast Grip” Gaskets by American Ductile Iron Pipe, or “Field Locks” Gaskets by U.S. Pipe, or equal.
   3. Restrained joints shall be "Lok-Ring" Restrained Joint by American Ductile Iron Pipe, "TR FLEX" Restrained Joint by U.S. Pipe, or ENGINEER-approved equal. Provide as indicated on the plans.
   4. Flanged joints shall conform to ANSI/AWWA C115/A21.15. Special ductile iron flanges to match up to 250 psi valve and equipment flanges shall meet ANSI/AWWA C110 and be specially drilled to ANSI/ASME B16.1 Class 250 standard dimensions with raised face.

F. For bell-and-spigot ends with rubber gaskets, the clearance between the bells and spigots shall be such that when combined with the gasket groove configuration and the gasket itself, will provide watertight joints under all operating conditions when properly installed. Require the pipe manufacturer to submit details complete with significant dimensions and tolerances and to submit performance data indicating that the proposed joint has performed satisfactorily under similar conditions. In the absence of a history of field performance, the results of a test program shall be submitted.

G. Shop-applied interior linings and exterior coatings shall be held back from the ends of the pipe as shown or as otherwise acceptable to the ENGINEER.

2.06 CEMENT-MORTAR LINING

A. Cement-Mortar Lining for Shop Application: Except as otherwise provided herein, interior surfaces of all ductile iron pipe, fittings and specials shown on the plans shall be cleaned and lined in the shop with cement-mortar lining applied centrifugally in conformity with ANSI/AWWA C104. During the lining operation and thereafter, the pipe shall be maintained in a round condition by suitable bracing or strutting. The lining machines shall be of a type that has been used successfully for similar work. Every precaution shall be taken to prevent damage to the lining. If lining is damaged or found faulty at delivery site, the damaged or unsatisfactory portions shall be replaced with lining conforming to these Specifications.

B. The minimum lining thickness shall be as follows:

Nominal Pipe Diameter (inches)	**Minimum Lining Thickness (inches)**
3 - 12	$^{1}/_{8}$
14 - 24	$^{3}/_{16}$
30 - 54	$^{1}/_{4}$

C. Protection of Pipe Lining/Interior: All shop-applied cement mortar lining shall be given a seal coat of asphaltic material in conformance with ANSI/AWWA C104.

2.07 EXTERIOR COATING OF PIPE

A. Exterior Coating of Exposed Piping: The exterior surfaces of pipe which will be exposed to the atmosphere inside structures or above ground shall be thoroughly cleaned and then given a shop coat of rust-inhibitive primer conforming to the requirements of these Specifications.

B. Exterior Coating of Buried Piping: The exterior coating shall be an asphaltic coating approximately 1mil thick. Where noted as required by the ENGINEER, pipe will be encased in polyethylene sleeves.

PART 3 - EXECUTION

3.01 INSTALLATION OF PIPE

A. Handling and Storage: All pipe, fittings, etc., shall be carefully handled and protected against damage, impact shocks, and free fall. All pipe handling equipment shall be acceptable to the ENGINEER. Pipe shall not be placed directly on rough ground but shall be supported in a manner that will protect the pipe against injury whenever stored at the trench site or elsewhere. No pipe shall be installed where the lining or coating show defects that may be harmful as determined by the ENGINEER. Such damaged lining or coating shall be repaired, or a new undamaged pipe shall be furnished and installed.

B. All pipe that is damaged prior to Substantial Completion shall be repaired or replaced.

C. Inspect each pipe and fitting prior to installation to ensure that there are no damaged portions of the pipe.

D. Before placement of pipe in the trench, each pipe or fitting shall be thoroughly cleaned of any foreign substance, which may have collected thereon, and shall be kept clean at all times thereafter. For this purpose, the openings of all pipes and fittings in the trench shall be closed during any interruption to the WORK.

E. Pipe Laying: The pipe shall be installed in accordance with ANSI/AWWA C600.

F. Pipe shall be laid directly on the bedding material. No blocking will be permitted, and the bedding shall be such that it forms a continuous, solid bearing for the full length of the pipe. Excavations shall be made as needed to facilitate removal of handling devices after the pipe is laid. Bell holes shall be formed at the ends of the pipe to prevent point loading at the bells or couplings. Excavation shall be made as needed outside the normal trench section at field joints to permit adequate access to the joints for field connection operations and for application of coating on field joints.

G. Each section of pipes 24 inches in diameter and larger shall be laid in the order and position shown on the laying schedule. In laying pipe, it shall be laid to the setline and grade, within approximately one inch plus or minus. On grades of zero slopes, the intent is to lay to grade.

H. Where necessary to raise or lower the pipe due to unforeseen obstructions or other causes, the ENGINEER may change the alignment and/or the grades. Such change shall be made by the deflection of joints, by the use of bevel adapters, or by the use of additional fittings. However, in no case shall the deflection in the joint exceed the maximum deflection recommended by the pipe manufacturer. No joint shall be misfit any amount that will be detrimental to the strength and water tightness of the finished joint.

I. Except for short runs that may be permitted by the ENGINEER, pipes shall be laid uphill on grades exceeding 10%. Pipe that is laid on a downhill grade shall be blocked and held in place until sufficient support is furnished by the following pipe to prevent movement. All bends shall be properly installed as shown.

J. Shallow buried pipes and pipes underneath structures shall be concrete encased where noted in the Contract Documents.

K. Cold Weather Protection: No pipe shall be installed upon a foundation into which frost has penetrated or at any time that there is a danger of the formation of ice or penetration of frost at the bottom of the excavation. No pipe shall be laid unless it can be established that the trench will be backfilled before the formation of ice and frost occurs.

L. Pipe and Specials Protection: The openings of all pipe and specials shall be protected with suitable bulkheads to prevent unauthorized access by persons, animals, water, or any undesirable substance. At all times, means shall be provided to prevent the pipe from floating.

M. Pipe Cleanup: As pipe laying progresses, the pipe interior shall be kept free of all debris. Completely clean the interior of the pipe of all sand, dirt, mortar splatter and any other debris following completion of pipe laying, pointing of joints and any necessary interior repairs prior to testing and disinfecting the completed pipeline.

3.02 RUBBER GASKETED JOINTS

A. Rubber Gasketed Joints: Immediately before jointing pipe, the bell end of the pipe shall be thoroughly cleaned, and a clean rubber gasket lubricated with an approved vegetable-based lubricant shall be placed in the bell groove. The spigot end of the pipe shall be carefully cleaned and lubricated with a vegetable-based lubricant. The spigot end of the pipe section shall then be inserted into the bell of the previously laid joint and telescoped into its proper position. Tilting of the pipe to insert the spigot into the bell will not be permitted.

3.03 INSTALLATION OF PIPE APPURTENANCES

A. Protection of Appurtenances: Where the joining pipe is tape-coated, buried appurtenances shall be coated with cold-applied tape in accordance with ANSI/AWWA C209, Type II. Where pipe is encased in polyethylene sleeves, buried appurtenances shall also be encased in polyethylene.

B. Installation of Valves: All valves shall be handled in a manner to prevent any injury or damage to any part of the valve. All joints shall be thoroughly cleaned and prepared prior to installation. Adjust all stem packing and operate each valve prior to installation to insure proper operation.

C. All valves shall be installed so that the valve stems are plumb and, in the location, shown.

END OF SECTION

SECTION 33 0524.13 – STEEL PIPE AND TUBING FOR AIR AND GAS SERVICE

PART 1 - GENERAL

1.01 THE REQUIREMENT

A. The CONTRACTOR shall provide steel pipe and appurtenances, complete and in place, in accordance with the Contract Documents.

B. The requirements of Section 22 1000 – Plumbing Piping shall apply to the WORK of this Section.

PART 2 - PRODUCTS

2.01 PIPE MATERIAL

A. **Water, Air, Fuel Gas, Oil, Steam, and Waste Service:** Unless otherwise indicated, galvanized and black steel pipe shall conform to ASTM A53 – Specification for Pipe, Steel Black and Hot-Dipped, Zinc-Coated, Welded and Seamless or ASTM A106 – Specification for Seamless Carbon Steel Pipe for High Temperature Service, Grade B, and shall be Schedule 10 or 40 as indicated in the Plans. Galvanized steel pipe shall not be cement mortar lined unless indicated otherwise in the Plans.

2.02 PIPE JOINTS

A. Black steel pipe for general service shall have screwed ends with NPT threads, welded joints, or flanged joints. Screwed joints shall be made up with Teflon tape and welded joints may have butt-weld fittings, socket-weld fittings, or flanges. Where indicated, black steel pipe shall have grooved ends for shouldered couplings or plain ends for sleeve-type couplings.

B. Black steel pipe for chlorine or sulfur dioxide pressure service shall be socket-welded except where required to match mating fittings of vacuum regulator check units, gas filters, valves, diaphragm units, gauges, and switches.

C. Galvanized steel pipe shall have screwed ends with NPT threads made up with Teflon tape. Where indicated, galvanized steel pipe shall have grooved ends for shouldered couplings or plain ends for sleeve-type couplings.

D. Where pressure conditions permit, black and galvanized steel pipe may have push-on joints for compression type fittings. For high-pressure service these joints shall be harnessed.

2.03 FITTINGS

A. **Common Use:** The following fittings shall be provided for galvanized or black steel pipe, as indicated in the Piping Schedule:

1. Threaded malleable iron fittings conforming to ANSI-ASME B16.3 – Malleable-Iron Threaded Fittings, Classes 150 and 300.
2. Threaded cast iron fittings conforming to ANSI/ASME B 16.4 - Cast Iron Threaded Fittings, Class 125 and 250.
3. Forged steel socket welded fittings conforming to ANSI/ASME B 16.11 - Forged Fittings, Socket - Welding and Threaded.
4. Butt welding fittings conforming to ANSI/ASME B 16.9 - Factory-Made Wrought Steel Butt Welding Fittings, Schedule 40 or 80, as indicated.
5. Threaded cast iron drainage fittings conforming to ANSI/ASME 16.12 - Cast Iron Threaded Drainage Fittings.

6. Flanged cast iron fittings conforming to ANSI/ASME B 16.1 - Cast Iron Pipe Flanges and Flanged Fittings, Class 25, 125, 250 and 800.
7. Flanged steel fittings conforming to ANSI/ASME B 16.5 - Pipe Flanges and Flanged Fittings, Steel Nickel Alloy and Other Special Alloys.
8. Grooved ductile iron fittings with grooving dimensions conforming to ANSI/AWWA C 606 - Joints, Grooved and Shouldered Type.
9. Compression-type steel fittings with armored Buna S gaskets for plain end pipe.

PART 3 - EXECUTION

3.01 INSTALLATION

A. **General:** All steel pipes shall be installed in a neat and workmanlike manner, properly aligned and cut from measurements taken at the site to avoid interferences with structural members, architectural features, openings, and equipment. Exposed pipes shall afford maximum headroom and access to equipment. Where necessary, all piping shall be installed with sufficient slopes for venting or drainage of liquids and condensate to low points.

B. **Supports and Anchors:** All piping shall be firmly supported with fabricated or commercial hangers or supports in accordance with Section 22 0529 – Hangers and Supports for Plumbing Piping and Equipment.

C. **Valves and Unions:** Water, steam, condensate gas, vacuum, and air supply piping to fixtures, groups of fixtures, and equipment shall be provided with a shutoff valve and union, unless the valve has flanged ends. Low points in water systems and driplegs in steam, gas and air systems shall have drainage valves. Unions shall be provided at threaded valves, equipment, and other devices requiring occasional removal or disconnection.

D. **Branch Connections:** Branch connections in horizontal runs of air and gas piping shall be made from the top of the pipe to avoid drainage of condensate into the equipment.

3.02 PIPE PREPARATION

A. Prior to installation, each pipe length shall be carefully inspected, be flushed clean of any debris or dust and be straightened if not true. Ends of threaded pipes shall be reamed and filed smooth. All pipe fittings shall be equally cleaned before assemblage.

3.03 PIPE JOINTS

A. **Threaded Joints:** Pipe threads shall conform to ANSI/ASME B1.20.1 – Pipe Threads, General Purpose (inch), and shall be full and cleanly cut with sharp dies. Not more than three threads shall remain exposed after installation.

B. **Welded Joints:** Welded joints shall conform to the specifications and recommendations of ANSI/ASME B 31.1 – Power Piping. All welding shall be done by skilled and qualified welders.

C. **Grooved Joints:** Grooves for grooved couplings and fittings shall be made with specially designed grooving tools to the Manufacturer’s recommendations and conform to ANSI/AWWA C606. All grooves shall be clean and sharp without flaws. The pipe ends shall be accurately cut at 90 degrees to the pipe axis.

D. **Push-On-Joints:** Push on joints and gasket installation shall be in accordance with the Manufacturer’s recommendations and lubricants. Pipe ends shall be beveled to

facilitate assembly. Lubricants shall be suitable for potable water service and shall be kept clean in closed containers.

3.04 INSPECTION AND FIELD TESTING

A. **Inspection:** All finished installations shall be carefully inspected for proper supports, anchoring, interferences, and damage to pipe, fittings, and coating. Any damage shall be repaired.

B. **Field Testing:** Prior to enclosure or burying, all piping systems shall be pressure tested as required for a period of not less than one hour, without exceeding the tolerances listed. Where no pressures are indicated, the pipes shall be subject to 1-1/2 times the maximum working pressure. All test equipment, labor, materials, and devices shall be furnished at the Contractor's expense.

1. Leakage may be determined by loss of pressure, soap solution, chemical indicator, or other positive and accurate methods. All fixtures, devices, or other accessories which are to be connected to the lines and which would be damaged if subjected to the test pressure shall be disconnected and ends of the branch lines plugged or capped as required during the testing procedures.

2. All leaks shall be repaired and the system shall be re-tested until no leaks are found.

END OF SECTION

SECTION 33 0531 – POLYVINYL CHLORIDE (PVC) PIPE

PART 1 – GENERAL

1.01 REQUIREMENT

A. Polyvinyl chloride pressure pipe for water distribution, in nominal diameters 4 inches through 60 inches.

B. Polyvinyl chloride sewer pipe for gravity sewers in nominal diameters 4 inches through 48 inches.

C. Polyvinyl chloride pressure pipe for sewers force mains in nominal diameters 4 inches through 60 inches.

D. Pipe 3 inch or smaller: Shall comply with these Specifications.

1.02 REFERENCES

A. **Commercial Standards:**

ANSI A 21.16 (AWWA C 116)	Protective Fusion Bonded Epoxy Coating for the Interior and Exterior Surfaces of Ductile Iron and Grey Iron Fittings for Water Supply Service.
ASTM D1248	Polyethylene Plastics Molding and Extrusion Materials.
ASTM D1784	Rigid Poly (Vinyl Chloride) (PVC) Compounds and Chlorinated Poly (Vinyl Chloride) (CPVC) Compounds.
ASTM D2241	Poly (Vinyl Chloride) (PVC) Pressure-Rated Pipe (SDR Series).
ASTM D2321	Underground Installation of Thermoplastic Pipe for Sewers and Other Gravity-Flow Applications.
ASTM D2444	Determination of the Impact Resistance of Thermoplastic Pipe and Fittings by Means of a Tup (Falling Weight).
ASTM D2680	Acrylonitrile-Butadiene-Styrene (ABS) and Poly (Vinyl Chloride) (PVC) Composite Sewer Piping.
ASTM D2774	Underground Installation of Thermoplastic Pressure Piping.
ASTM D3034	Type PSM Poly (Vinyl Chloride) (PVC) Sewer Pipe and Fittings.
ASTM D3139	Joints for Plastic Pressure Pipes Using Flexible Elastomeric Seals.
ASTM D3212	Joints for Drain and Sewer Plastic Pipes Using Flexible Elastomeric Seals.
ASTM F477	Elastomeric Seals (Gaskets) for Joining Plastic Pipe.
ASTM F679	Poly (Vinyl Chloride) (PVC) Large-Diameter Plastic Gravity Sewer Pipe and Fittings.
ASTM F794	Poly (Vinyl Chloride) (PVC) Profile Gravity Sewer Pipe and Fittings Based on Controlled Inside Diameter.
ASTM F949	Poly (Vinyl Chloride) (PVC) Corrugated Sewer Pipe with Smooth Interior and Fittings.
AWWA C110	American National Standard for Ductile-Iron and Gray-Iron Fittings, 3 Inches Through 48 Inches for Water.
AWWA C605	Underground Installation of PVC Pressure Pipe and Fittings for Water.
AWWA C651	Disinfecting Water Mains.
AWWA C111	Rubber-Gasket Joints for Ductile-Iron Pressure Pipe and Fittings.
AWWA C900-16	Polyvinyl Chloride (PVC) Pressure Pipe and Fabricated Fittings, 4 Inches Through 60 Inches.
AWWA C909	Molecularly-Oriented Polyvinyl Chloride (PVCO) Pressure Pipe, 4 Inches through 12 Inches (100mm through 300 mm), for Water Distribution.

PPI TR3	Developing Recommended Hydrostatic Design Stresses for Thermoplastic Pipe Materials.
UNI-B-13	Joint Restraint Devices for Use with Polyvinyl Chloride Pipe.

1.03 SUBMITTALS

A. Submittals shall be made in accordance with Section 01 3300 – Submittal Procedures.

B. Submit shop drawings showing design of new pipe and fittings indicating alignment and grade, laying dimensions, fabrication, fittings, flanges, and special details.

1.04 QUALITY CONTROL

A. Submit manufacturer's certifications that PVC pipe and fittings meet requirements of this Section and AWWA C900 and AWWA C909 for pressure pipe applications, or appropriate ASTM standard specified for gravity sewer pipe.

B. Submit manufacturer's certification that PVC pressure pipe for water lines and force mains has been hydrostatically tested at factory in accordance with AWWA C900, AWWA C909, and this Section.

C. When foreign manufactured material is proposed for use, have material tested for conformance to applicable ASTM requirements by certified independent testing laboratory located in United States. Certification from another source is not acceptable. Furnish copies of test reports to ENGINEER for review. Cost of testing paid by CONTRACTOR.

PART 2 – PRODUCTS

2.01 MATERIAL

A. Use PVC compounds in manufacture of pipe that contain no ingredient in amount that has been demonstrated to migrate into water in quantities considered to be toxic.

B. Furnish PVC pressure pipe manufactured from Class 12454-A or Class 12454-B virgin PVC compounds as defined in ASTM D1784. Use compounds pre-qualified for a 4,000 psi hydrostatic design basis, and a maximum hydrostatic design stress of 2,000 psi for water at 73°F per requirements of PPI TR3. Provide pipe which is homogeneous throughout, free of voids, cracks, inclusions, and other defects, uniform as commercially practical in color, density, and other physical properties. Deliver pipe with surfaces free from nicks and scratches with joining surfaces of spigots and joints free from gouges and imperfections which could cause leakage.

C. PVC Solvent Weld Schedule Pipe shall meet:
1. PVC Schedule 40 and 80: ASTM D1785/ D2665/ D2241
2. Cellular Core PVC Sch 40: ASTM F891
3. PVC Schedule 30: ASTM D2949
4. PVC Perforated Drain Pipe: ASTM D2729
5. ABS Sch 40: ASTM D2661
6. Cellular Core ABS Sch 40: ASTM F628

D. Standard PVC laying length shall be 14 or 20 ft +/- 1”. Solvent Weld Pipe shall be manufactured in standard laying length of 10 ft and 20 ft.

E. Do not use PVC for offset sections with depth of cover greater than 20 feet or less than 4 feet, unless acceptable by manufacturer. Do not use PVC in potentially petroleum-contaminated areas.

F. PVC in areas exposed to direct sunlight shall be protected with UV-inhibitor coating.

2.02 Pipe Class and Working Pressures:

A. Pipe Pressure Class shall be as noted per plan and shall meet the requirements in the

following Table 1.

Table 1 – Pipe Pressure Class

APPLICATION	ASTM or AWWA DESIGNATION	SDR (Max.)/ STIFFNESS (MIN.)	DIAMETER SIZE RANGE
PRESSURE/ GRAVITY	C900 C900 C900	DR 25/ Class 165 psi DR 18/ Class 235 psi DR 14/ Class 305 psi	4" to 60” 4" to 42 4” to 30”
GRAVITY	D3034 D3034	SDR 35/ 46 psi SDR 26/ 115 psi	4" to 15" 4" to 15"
GRAVITY	F679 F679	PS46/ 46 psi PS 115/ 115 psi	18” to 48” 18" to 48"
CORRUGATED GRAVITY	F949 F949	N/A / 46 psi N/A / 115 psi	4" to 48" 4" to 48"
CORRUGATED GRAVITY	F794 F794	N/A / 46 psi N/A / 115 psi	4" to 48" 8" to 15"

2.03 PRESSURE SERVICE PIPE

A. All potable water pipe shall bear National Sanitation Foundation Seal of Approval (NSF-PW) and meet the requirements of AWWA C900, ANSI/ NSF 61.

B. For PVC C900, pipeline curves and bend can be made by deflecting joints by no more than 1.5 deg. Do not exceed maximum deflection recommended by pipe and fitting manufacturer. Submit details of other methods of providing curves and bends for review by ENGINEER.

C. For PVC Solvent Weld Pipe (12” and smaller), pipeline curves can be made by bending the pipe within the limits of pipe curvature found in Table 2 below.

2.04 GRAVITY SEWER PIPE

A. When solid wall PVC pipe 18 inches to 27 inches in diameter is required in SDR 26, provide pipe conforming to ASTM F679, except provide wall thickness as required for SDR 26 and pipe strength of 115 psi.

B. No deflection at joint shall be allowed for pipe sizes 12” or smaller. Pipeline curves shall be accomplished through bending of the pipe within the limits of pipe curvature as shown in the following Table:

Table 2 – Pipe Bend Curvature

PIPE SIZE (IN)	MIN RADIUS (FT)	OFFSET/ 20 FT (IN)	OFFSET/ 14 FT (IN)
4	100	23.9	11.7
6	150	16	7.8
8	200	12	5.9
10	250	9.6	4.7
12	300	8	3.9

C. For pipes 15” – 36” maximum angular deflection at joint shall be 1.5 degrees or as approved by pipe manufacturer.

D. For sewers up to 12 inches in diameter crossing over water lines, or crossing under water lines with less than 2 feet separation, provide minimum 150 psi pressure-rated pipe conforming to ASTM D2241 with suitable PVC adapter couplings. Pipes shall be encased in concrete, unless noted otherwise.

2.05 GASKETS

A. For pressure pipe, integral gasket bell and spigot “push-on” joint shall conform to ASTM D3139.

B. For gravity pipe, locked-in gaskets joints shall meet ASTM D3212 for joint tightness (22” Hg vacuum and a 25-ft head pressure test)

C. Gaskets shall meet the requirements of ASTM F477.

D. Flat Face Mating Flange: Full faces 1/8-inch-thick ethylene propylene (EPR) rubber.

E. Raised Face Mating Flange: Flat ring 1/8-inch ethylene propylene (EDR) rubber, with filler gasket between OD of raised face and flange OD to protect flange from bolting moment.

F. Lubricant for rubber-gasketed joints: Water soluble, non-toxic, non-objectionable in taste and odor imparted to fluid, non-supporting of bacteria growth, having no deteriorating effect on PVC or rubber gaskets.

G. Manufacturer shall test sample from each batch conforming to requirements ASTM D2444.

2.06 JOINTS AND FITTINGS:

A. Flanged or bolted mechanical joint or push-on joint ductile or gray iron fittings shall conform to ANSI/AWWA C110/A21.10 or C153/A21.53 and ANSI/ AWWA C111/A21.11. All iron fittings shall be cement mortar lined and tar (seal) coated in accordance with ANSI/AWWA C104/A21.4

B. PVC pipe fittings shall be full-bodied, either injection molded or factory fabricated, and shall meet AWWA C907. Saddle-type tee or wye fittings are not acceptable, unless noted otherwise.

C. Fusible PVC pipe lengths shall be assembled in the field with butt-fused joints. The Contractor shall follow the pipe supplier’s written guidelines for this procedure.

D. Solvent Weld PVC pipes shall utilize solvent weld on bell end, plain end, and socket type fittings and shall meet ASTM D2564.

E. Provide approved restrained joint fittings as required and as shown on plans. Restraining devices shall meet or exceed the requirements of ASTM F1674 or UNI-Bell B-13 "Recommended Standard Performance Specification for Joint Restrainers for Use with PVC Pipe."

F. Exterior Protection: Provide polyethylene wrapping of ductile-iron fittings.

2.07 Hydrostatic Test: AWWA C900, AWWA C909, ANSI A21.10 (AWWA C110); at point of manufacture; submit manufacturer's written certification.

PART 3 – EXECUTION

3.01 PROTECTION

A. Store pipe under cover out of direct sunlight and protect from excessive heat or harmful chemicals in accordance with manufacturer's recommendations.

3.02 INSTALLATION

A. Install PVC pipe in accordance with these Specifications, ASTM D2321 for Sewer Pipe, and manufacturer's recommendations.

B. Install PVC water service pipe to clear utility lines and have minimum depth of cover 48” below major streets, unless otherwise required by Drawings.

C. Avoid imposing strains that will overstress or buckle pipe when lowering pipe into trench.

D. Hand shovel pipe bedding under pipe haunches and along sides of pipe barrel and compact to eliminate voids and ensure side support.

F. Allow PVC pipe to cool to ground temperature before backfilling when assembled out of trench to prevent pullout due to thermal contraction.

3.03 PVC RESTRAINED MECHANISM

A. Do not apply lubricant to spline or pipe or coupling spline grooves.

B. Do not use excessive force while inserting the spline through coupling.

C. Insert spline until it is fully seated around circumference of pipe.

D. Field Cutting of Pipe Ends:
   1. Perform by workers certified by manufacturer.
   2. Use a PVC pipe cutter and provide square ends.
   3. Use manufacturer approved power routing and grooving tool to field fabricate required pipe groove.

END OF SECTION

SECTION 33 0531.19 – FUSIBLE POLYVINYL CHLORIDE (FPVC) PIPE

PART 1 – GENERAL

1.01 REQUIREMENT

A. Fusible polyvinyl chloride sewer pipe for gravity sewers in nominal diameters 4 inches through 48 inches.

1.02 REFERENCES

A. **Commercial Standards:**

ANSI A 21.16 (AWWA C 116)	Protective Fusion Bonded Epoxy Coating for the Interior and Exterior Surfaces of Ductile Iron and Grey Iron Fittings for Water Supply Service.
ASTM C923	Resilient Connectors Between Reinforced Concrete Manhole Structures, Pipes and Laterals
ASTM D1248	Polyethylene Plastics Molding and Extrusion Materials.
ASTM D1784	Rigid Poly (Vinyl Chloride) (PVC) Compounds and Chlorinated Poly (Vinyl Chloride) (CPVC) Compounds.
ASTM D2241	Poly (Vinyl Chloride) (PVC) Pressure-Rated Pipe (SDR Series).
ASTM D2321	Underground Installation of Thermoplastic Pipe for Sewers and Other Gravity-Flow Applications.
ASTM D2444	Determination of the Impact Resistance of Thermoplastic Pipe and Fittings by Means of a Tup (Falling Weight).
ASTM D2680	Acrylonitrile-Butadiene-Styrene (ABS) and Poly (Vinyl Chloride) (PVC) Composite Sewer Piping.
ASTM D2774	Underground Installation of Thermoplastic Pressure Piping.
ASTM D3034	Type PSM Poly (Vinyl Chloride) (PVC) Sewer Pipe and Fittings.
ASTM D3139	Joints for Plastic Pressure Pipes Using Flexible Elastomeric Seals.
ASTM D3212	Joints for Drain and Sewer Plastic Pipes Using Flexible Elastomeric Seals.
ASTM F477	Elastomeric Seals (Gaskets) for Joining Plastic Pipe.
ASTM F679	Poly (Vinyl Chloride) (PVC) Large-Diameter Plastic Gravity Sewer Pipe and Fittings.
ASTM F794	Poly (Vinyl Chloride) (PVC) Profile Gravity Sewer Pipe and Fittings Based on Controlled Inside Diameter.
ASTM F949	Poly (Vinyl Chloride) (PVC) Corrugated Sewer Pipe with Smooth Interior and Fittings.
AWWA C110	American National Standard for Ductile-Iron and Gray-Iron Fittings, 3 Inches Through 48 Inches for Water.
AWWA C605	Underground Installation of PVC Pressure Pipe and Fittings for Water.
AWWA C651	Disinfecting Water Mains.
AWWA C111	Rubber-Gasket Joints for Ductile-Iron Pressure Pipe and Fittings.
AWWA C900-16	Polyvinyl Chloride (PVC) Pressure Pipe and Fabricated Fittings, 4 Inches Through 60 Inches.
AWWA C909	Molecularly-Oriented Polyvinyl Chloride (PVCO) Pressure Pipe, 4 Inches through 12 Inches (100mm through 300 mm), for Water Distribution.
PPI TR3	Developing Recommended Hydrostatic Design Stresses for Thermoplastic Pipe Materials.
UNI-B-13	Joint Restraint Devices for Use with Polyvinyl Chloride Pipe.

1.03 SUBMITTALS

A. Submittals shall be made in accordance with Section 01 3300 – Submittal Procedures.

B. Submit shop drawings showing design of new pipe and fittings indicating alignment and grade, laying dimensions, fabrication, fittings, flanges, and special details.

C. Post-Construction Submittals: The following is required from the contractor and/or fusion provider to Owner or pipe supplier upon request:
   1. Fusion machine make, model, and serial number;
   2. Fusion technician identification and qualification level;
   3. Fusion joint number;
   4. Fusion, heating, and drag pressure settings;
   5. Heat plate temperature;
   6. Fusion heating time and cool down time;
   7. Ambient temperature and weather conditions.

1.04 QUALITY CONTROL

A. Submit manufacturer's certifications that PVC pipe and fittings meet requirements of this Section and AWWA C900 and AWWA C909 for pressure pipe applications, or appropriate ASTM standard specified for gravity sewer pipe.

B. Submit manufacturer's certification that PVC pressure pipe for water lines and force mains has been hydrostatically tested at factory in accordance with AWWA C900, AWWA C909, and this Section.

C. When foreign manufactured material is proposed for use, have material tested for conformance to applicable ASTM requirements by certified independent testing laboratory located in United States. Certification from another source is not acceptable. Furnish copies of test reports to ENGINEER for review. Cost of testing paid by CONTRACTOR.

PART 2 – PRODUCTS

2.01 MATERIAL

A. Use PVC compounds in manufacture of pipe that contain no ingredient in amount that has been demonstrated to migrate into water in quantities considered to be toxic.

B. Furnish PVC pressure pipe manufactured from Class 12454-A or Class 12454-B virgin PVC compounds as defined in ASTM D1784. Use compounds pre-qualified for a 4,000 psi hydrostatic design basis, and a maximum hydrostatic design stress of 2,000 psi for water at 73°F per requirements of PPI TR3. Provide pipe which is homogeneous throughout, free of voids, cracks, inclusions, and other defects, uniform as commercially practical in color, density, and other physical properties. Deliver pipe with surfaces free from nicks and scratches with joining surfaces of spigots and joints free from gouges and imperfections which could cause leakage.

C. Fusible PVC pipes shall meet ASTM D2241/ D1785, CSA B137.3, AWWA C900, NFS 61 (potable water), and ASTM Cell Classification 12454.

D. PVC Solvent Weld Schedule Pipe shall meet:
   1. PVC Schedule 40 and 80: ASTM D1785/ D2665/ D2241
   2. Cellular Core PVC Sch 40: ASTM F891
   3. PVC Schedule 30: ASTM D2949
   4. PVC Perforated Drain Pipe: ASTM D2729
   5. ABS Sch 40: ASTM D2661
   6. Cellular Core ABS Sch 40: ASTM F628

E. Fusible PVC pipe shall be manufactured in a standard 40’ nominal length, or custom

lengths as specified in the plans. Solvent Weld Pipe shall be manufactured in standard laying length of 10 ft and 20 ft.

F. Do not use PVC for offset sections with depth of cover greater than 20 feet or less than 4 feet, unless acceptable by manufacturer. Do not use PVC in potentially petroleum-contaminated areas.

G. PVC in areas exposed to direct sunlight shall be protected with UV-inhibitor coating.

2.02 Pipe Class and Working Pressures:

A. Pipe Pressure Class shall be as noted per plan and shall meet the requirements in the following Table 1.

Table 1 – Pipe Pressure Class

APPLICATION	ASTM or AWWA DESIGNATION	SDR (Max.)/ STIFFNESS (MIN.)	DIAMETER SIZE RANGE
PRESSURE/ GRAVITY	C900 C900 C900	DR 25/ Class 165 psi DR 18/ Class 235 psi DR 14/ Class 305 psi	4" to 60” 4" to 42 4” to 30”
GRAVITY	D3034 D3034	SDR 35/ 46 psi SDR 26/ 115 psi	4" to 15" 4" to 15"
GRAVITY	F679 F679	PS46/ 46 psi PS 115/ 115 psi	18” to 48” 18" to 48"
CORRUGATED GRAVITY	F949 F949	N/A / 46 psi N/A / 115 psi	4" to 48" 4" to 48"
CORRUGATED GRAVITY	F794 F794	N/A / 46 psi N/A / 115 psi	4" to 48" 8" to 15"

2.03 PRESSURE SERVICE PIPE

A. All potable water pipe shall bear National Sanitation Foundation Seal of Approval (NSF-PW) and meet the requirements of AWWA C900, ANSI/ NSF 61.

B. For PVC C900, pipeline curves and bend can be made by deflecting joints by no more than 1.5 deg. Do not exceed maximum deflection recommended by pipe and fitting manufacturer. Submit details of other methods of providing curves and bends for review by ENGINEER.

C. For PVC Solvent Weld Pipe (12” and smaller), pipeline curves can be made by bending the pipe within the limits of pipe curvature found in Table 2 below.

2.04 GRAVITY SEWER PIPE

A. When solid wall PVC pipe 18 inches to 27 inches in diameter is required in SDR 26, provide pipe conforming to ASTM F679, except provide wall thickness as required for SDR 26 and pipe strength of 115 psi.

B. No deflection at joint shall be allowed for pipe sizes 12” or smaller. Pipeline curves shall be accomplished through bending of the pipe within the limits of pipe curvature as shown in the following Table:

Table 2 – Pipe Bend Curvature

PIPE SIZE (IN)	MIN RADIUS (FT)	OFFSET/ 20 FT (IN)	OFFSET/ 14 FT (IN)
4	100	23.9	11.7
6	150	16	7.8
8	200	12	5.9
10	250	9.6	4.7
12	300	8	3.9

C. For pipes 15” – 36” maximum angular deflection at joint shall be 1.5 degrees or as approved by pipe manufacturer.

D. For sewers up to 12 inches in diameter crossing over water lines, or crossing under water lines with less than 2 feet separation, provide minimum 150 psi pressure-rated pipe conforming to ASTM D2241 with suitable PVC adapter couplings. Pipes shall be encased in concrete, unless noted otherwise.

2.05 FUSIBLE PVC PIPE FOR GRAVITY SEWER

A. Fusible PVC pipe shall conform to AWWA C900, ASTM D2241 or ASTM D1785 for standard dimensionality, as applicable. Testing shall be in accordance with the referenced AWWA standard.

B. Fusible PVC pipe shall be extruded with plain ends. The ends shall be square to the pipe and free of any bevel or chamfer. There shall be no bell or spigot of any kind incorporated into the pipe.

C. Fusible PVC pipe shall be manufactured in a standard 40’ nominal length, or custom lengths as specified.

D. Fusible PVC pipe shall be green in color for wastewater use.

E. Fusible PVC pipe shall be connected to manholes and other structures to provide a leak-free, properly graded flow into or out of the manhole or structure. Connections to a new manhole or structure shall be as indicated in the construction documents.

1. A flexible, watertight gasket per ASTM C923 shall be cast integrally with riser section(s) for all precast manholes and structures.
2. Drop connections shall be required where shown on drawings.
3. Grout internal joint space with non-shrink grout.

F. Adhere to the following data regarding radius of curvature for fusible PVC pipe. The confirmation of proposed radius of each section has to be part of the required submittal prior to construction.

Pipe Diameter (in)	DIPS Series	
	Critical Bucking Pressure (lbs)	Minimum Allowable Bending (ft)
4	426	100
6	426	144
8	425	189
10	426	231
12	426	275

G. Unless otherwise specified, fusible PVC pipe lengths shall be assembled in the field with butt-fused joints. The Contractor shall follow the Manufacturer's written guidelines.

H. Fusible PVC sweeps or bends shall have at least 2 feet of straight section on either end of the sweep or bend to allow for fusion of the sweep or bend to the pip. Unless otherwise specified, there shall be no gasketed connections utilized with a fusible PVC sweep.

I. Standard fusible PVC sweep or bend angles shall not be greater than 22.5 degrees and shall be used with fusible PVC pipe with nominal diameters 4-inch through 16-inch, unless otherwise specified.

2.06 FUSION JOINTS

A. Unless otherwise specified, fusible PVC pipe lengths shall be assembled in the field with butt-fused joints. The Contractor shall follow the pipe supplier's written guidelines for this procedure. All fusion joints shall be completed as described in this specification.

PART 3 – EXECUTION

3.01 PROTECTION

A. Store pipe under cover out of direct sunlight and protect from excessive heat or harmful chemicals in accordance with manufacturer's recommendations.

3.02 INSTALLATION

A. Install PVC pipe in accordance with these Specifications, ASTM D2321 for Sewer Pipe, and manufacturer's recommendations.

B. Install PVC water service pipe to clear utility lines and have minimum depth of cover 48" below major streets, unless otherwise required by Drawings.

C. Avoid imposing strains that will overstress or buckle pipe when lowering pipe into trench.

D. Hand shovel pipe bedding under pipe haunches and along sides of pipe barrel and compact to eliminate voids and ensure side support.

F. Allow PVC pipe to cool to ground temperature before backfilling when assembled out of trench to prevent pullout due to thermal contraction.

3.03 PVC RESTRAINED MECHANISM

A. Do not apply lubricant to spline or pipe or coupling spline grooves.

B. Do not use excessive force while inserting the spline through coupling.

C. Insert spline until it is fully seated around circumference of pipe.

D. Field Cutting of Pipe Ends:
   1. Perform by workers certified by manufacturer.
   2. Use a PVC pipe cutter and provide square ends.
   3. Use manufacturer approved power routing and grooving tool to field fabricate required pipe groove.

3.04 FUSION PROCESS FOR FUSIBLE PVC

A. Fusible PVC pipe shall be handled in a safe manner before, during, and after the fusion process and in accordance with this specification and the pipe supplier's guidelines.

B. Fusible PVC pipe shall be fused by qualified fusion technicians, as documented by the pipe supplier.

C. Only appropriately sized and outfitted fusion machines that have been approved by the pipe supplier shall be used for the fusion process. Fusion machines must incorporate the following elements:

1. Heat Plate – Heat plates shall be in good condition with no deep gouges or scratches. Plates shall be kept clean and free of any debris or contamination. Heater controls shall function properly; cord and plug shall be in good condition. The appropriately sized heat plate shall be capable of maintaining a uniform and consistent heat profile and temperature for the size of pipe being fused, per the pipe supplier's guidelines.
2. Carriage – Carriages shall travel smoothly with no binding at low pressure. Jaws shall be in good condition with proper and clean inserts for the pipe size being fused. Insert pins shall be installed with no interference to carriage travel.
3. General Machine – All fusion machines shall be inspected for obvious defects, missing parts, hydraulic leaks, or potential safety issues prior to fusion.
4. Data Logging Device – An approved, fully functional datalogging device, with the current version of the pipe supplier's software, shall be used. Datalogging device operations and maintenance manual shall be kept with the unit at all times. If fusing for extended periods of time, an independent 110V power source shall be available to extend battery life.
5. Other equipment specifically required for the fusion process shall include the following:
    a) Pipe rollers shall be used for pipe support to either side of the machine.
    b) An infrared (IR) pyrometer with an accuracy of 1% or better, shall be used to check pipe and heat plate temperatures.
    c) Fusion machine operations and maintenance manual shall be kept with the fusion machine at all times.
    d) Facing blades specifically designed for cutting fusible PVC pipe shall be used.
    e) For fusion in inclement weather and/or windy conditions, a weather protection canopy with sides that allows full machine motion of the heat plate, fusion assembly and carriage shall be provided per the pipe supplier's recommendations. When the pipe temperature is below 40ºF, the pipe supplier's cold weather operating procedures shall be followed.

D. Joint Recording: Each fusion joint shall be logged by an approved electronic monitoring device (Data logger) connected to the fusion machine hydraulic system. The fusion data logging report shall be generated by software developed specifically for the butt-fusion of fusible PVC pipe. The software shall register and/or record the parameter required by the pip supplier and these specifications. Required data not logged by the data logger shall be logged manually and included in the fusion technician's joint report.

3.05 LEAKAGE TESTING FOR NON-PRESSURE FUSIBLE PVC

A. Gravity sanitary sewer leakage testing may include appropriate water or low-pressure air testing and shall be in accordance with MAG Standard Detail 611 and ASTM F1417.

END OF SECTION

SECTION 33 0561 – CONCRETE MANHOLES

PART 1 - GENERAL

1.01 SUMMARY

A. Section Includes: Manholes for sanitary sewer system assemblies.

1.02 REFERENCES

A. Soils Report: This work shall conform to the requirements of the latest Geotechnical Evaluation.

B. American National Standards Institute (ANSI)

C. AASHTO: American Association of State Highway and Transportation Officials Standard Specification for Highway Bridges

D. American Society for Testing and Materials (ASTM):

A48	Gray Iron Castings
A193	Alloy Steel and Stainless Steel Bolting Materials for High-Temperature Service.
A615	Standard Specification for Deformed and Plain Billet-Steel Bars for Concrete Reinforcement
C14	Concrete Sewer, Storm Drain, and Culvert Pipe.
C387	Packaged, Dry, Combined Materials for Mortar and Concrete.
C478	Precast Reinforced Concrete Manhole Sections.

1.03 SUBMITTALS

A. Submittals shall be furnished in accordance with Section 01 3300 – Submittal Procedures.

B. Shop Drawings:
1. Submit drawing of each manhole with plan and sections showing manhole dimensions and actual installation.
2. Submit testing plan, documentation methods, and proposed schedule.

PART 2 - PRODUCTS

2.01 MANHOLES

A. Manhole Bases: The base of all manholes shall be either cast-in-place concrete or precast concrete, except for manholes housing air and vacuum release valve assemblies.
1. Precast concrete bases shall have the base slab integral with the sidewalls. The base slab shall be 6 inches minimum thickness with No. 4 reinforcement steel bars at 8 inches on centers each way in the center of the slab. The base reinforcement steel shall be tied to the wall steel.
2. Bases for manholes housing air and vacuum release valve assemblies shall consist of a drain gravel base and precast or cast-in-place concrete ring foundation.

B. Precast Manhole Sections: Precast manhole sections conforming to ASTM C478 shall be either 48-inch, 60-inch, 72-inch, or 84-inch internal diameter with 5-inch minimum walls or as otherwise shown for special purposes. The top and bottom of all sections shall be parallel.

C. Eccentric Sections: Eccentric cones shall be provided for all manholes except as otherwise shown on the Drawings. Cones shall have the same wall thickness and reinforcement as the precast manhole section.

D. Manhole Grade Rings:
1. Manhole grade rings for extensions shall be a maximum 6 inches high. Extensions will be limited to 15 inches.

2. Finish grade for solid covers shall be ½-inch below flush in concrete or asphalt concrete paved areas, and 6 inches above finish grade in unpaved areas, except flush where gated covers are specified.
3. Grade rings shall have anchor bolt holes for bolt-down frames and covers.
4. Finish installation in accordance with MAG standard Detail 420-2

E. Factory Testing: Prior to delivery of precast manhole sections, yard tests shall be conducted at the point of manufacture. Precast sections to be tested shall be selected at random from stockpiled material to be supplied for the job. All test specimens shall be mat tested, and shall meet the permeability test requirements of ASTM C14.

F. Joints of Manhole Sections: Tongue-and-groove type sealed with either mortar or preformed plastic joint material.
1. Mortar: Standard premixed mortar conforming to ASTM C387 or proportion 1 part portland cement to 2 parts clean, well-graded sand which will pass a 1/8-inch screen. Admixtures may be used not exceeding the following percentages of weight of cement: Hydrated lime, 10 percent; diatomaceous earth or other inert materials, 5 percent. Consistency of mortar shall be such that it will readily adhere to the manhole section if using the standard tongue-and-groove type joint. Mortar mixed for longer than 30 minutes shall not be used.
2. Preformed Plastic Gaskets: Preformed plastic gaskets may be used in lieu of mortar type joints.
   a. Manufacturers:
      1) Kent-Seal No. 2, Hamilton Kent Manufacturing Company, Box 178, Kent, OH 44240;
      2) Ram-Nek, K. T. Snyder Company, Inc., Central National Bank Building, Houston, TX 77002;
      3) or ENGINEER-approved equal, meeting all requirements of Federal Specification SS-S-00210.

G. Pipe connections to manholes shall be as specified by the pipe manufacturer. Inlet and outlet pipes shall extend through the walls of the structures for a sufficient distance beyond the outside surface to allow for connections, but shall be cut off flush with the wall on the inside surface. For concrete structures, the mortar shall be placed around these pipes so as to form a tight, neat connection.

H. Manhole frames and covers shall be cast iron as detailed on the Drawings and elsewhere in these Specifications and Contract Documents.

1. Use castings for frames, grates, rings, and covers conforming to ASTM A48, Class 35B. Provide locking covers if indicated on Drawings.

2. Use clean castings capable of withstanding application of AASHTO M306 - 40,000-pound proof loading without detrimental permanent deformation.

3. Fabricate castings to conform to shapes, dimensions, and with wording or logos shown on Drawings. Standard dimensions for manhole covers are 32 inches in diameter.

4. Cast iron castings shall be tough, close-grained gray iron, sound, smooth, clean, free from blisters, blowholes, shrinkage, cold shuts, and all defects, and shall conform to ASTM A48, Class 30B. Plane or grind bearing surfaces to ensure flat, true surfaces.

5. Bolt-down covers shall be used on all electrical vaults and where indicated on Drawings.

6. Capscrews and washers shall be Type 316 stainless steel conforming to ASTM A193. Countersink bolt holes in cover so that the top of the capscrews are below the top plane of the cover. Frames for bolt-down covers shall be supplied with four ¾-inch-diameter Type 316 stainless steel anchor bolts, nuts, and washer as detailed on the Drawings.
7. Nominal inside opening of the frame shall be 24 inches, unless noted otherwise. Provide a blind pick hole or lifting lug in the cover. Do not provide lifting rings or vent holes in covers unless specifically required.

2.02 CLEANOUTS

A. Covers shall be true and seat within frame at all points.

B. Cleanout frames and covers shall be Pinkerton Foundry No. A-469 or D&L Supply No. H-8024, or ENGINEER-approved equal.

PART 3 - EXECUTION

3.01 INSTALLATION

A. Manholes:
1. Concrete Base: Vibrate to densify poured in-place concrete and screed so that the first precast manhole section to be placed has a level, uniform bearing for the full circumference.
2. Deposit sufficient mortar on base to assure watertight seal between base and manhole wall or place the first precast section of manhole in concrete base before concrete has set. First section shall be properly located and plumb.
3. Carefully inspect precast manhole sections to be joined. Sections with chips or cracks in the tongue shall not be used. Clean ends of sections before assembly. Align manhole steps vertically.
4. Joints with preformed plastic gaskets shall be installed in strict conformance with the manufacturer's recommendations. Only pipe primer furnished by the gasket manufacturer will be approved.
5. For mortar joints, thoroughly wet joint with water prior to placing mortar. Place mortar on groove of lower section. Set next section in place. Fill joint completely with mortar of the proper consistency. Trowel interior and exterior surfaces smooth on standard tongue-and-groove joints. Prevent mortar from drying out, and cure by applying an approved curing compound or comparable approved method. Chip out and replace all cracked or defective mortar.

B. Construct manhole inverts with smooth transitions to ensure an unobstructed flow through manhole. Remove all sharp edges or rough sections which tend to obstruct flow. Do not lay pipe through manholes. Trowel all mortar surfaces smooth.

C. Install frames and covers. Frames shall be set in a bed of mortar with the mortar carried over the flange of the ring. Install bolt-down manholes as shown or as recommended by manufacturer. Provide a minimum of one 6-inch-high grade ring under the frame and cover. Extend anchor bolts through the grade ring to the frame. Hook the anchor bolt under the grade ring.

D. Manholes shall be tested as required by these Specifications and Contract Documents.

3.02 CLEANOUTS AND VAULTS

A. Construct in accordance with details as indicated on the Drawings.

3.03 CLEANING

A. Construction debris and other foreign matter shall be removed to the satisfaction of the ENGINEER.

B. Install cover drain pipe to minimum 12” x 12” x 12” drain rock approximately 10 feet from manhole on down slope.

C. Install top of manholes at 6 inches above finish grade or surface. Install surveyor markings to establish finish grade.

END OF SECTION

SECTION 33 3216 – PACKAGED WASTEWATER GRINDER PUMP ASSEMBLIES

PART 1 - GENERAL

1.01 GENERAL DESCRIPTION: The Contractor shall furnish complete factory-built and tested grinder pump unit(s), each consisting of a grinder pump core suitably mounted on an integral stand of stainless steel, special polyethylene tank, electrical quick disconnect (NEMA 6P), pump removal harness, discharge assembly/shut-off valve, anti-siphon valve/check valve assembly, electrical alarm assembly and all necessary internal wiring and controls. For ease of serviceability, all pump motor/grinder units shall be of like type and horsepower throughout the system.

1.02 SUBMITTALS:

A. Submittals shall be furnished in accordance with Sections 01 3300 – Submittal Procedures and applicable Sections of these Specifications and Contract Documents.

B. The MANUFACTURER shall supply four copies of Operation and Maintenance Manuals to the OWNER, and one copy of the same to the ENGINEER.

1.03 MANUFACTURER: Grinder pump stations, complete with all appurtenances, form an integral system, and as such, shall be supplied by one grinder pump station manufacturer. The CONTRACTOR shall be responsible for the satisfactory operation of the entire system. The equipment specified shall be a product of a company experienced in the design and manufacture of grinder pumps for specific use in low pressure sewage systems. The company shall submit detailed installation and user instructions for its product, submit evidence of an established service program including complete parts and service manuals, and be responsible for maintaining a continuing inventory of grinder pump replacement parts. The MANUFACTURER shall provide, upon request, a reference and contact list from ten of its largest contiguous grinder pump installations of the type of grinder pumps described within this specification.

The MANUFACTURER of the grinder pump station shall be Environment One Corporation, Sierra Peak, or ENGINEER approved equal.

Attention is directed to the fact that the drawings and overall system design are based on a particular piece of equipment from a particular manufacturer. These specifications are intended to provide guidelines for standard equipment of a recognized manufacturer who already meets all the requirements of this specification.

1.04 EXPERIENCE CLAUSE: The equipment furnished hereunder shall be the product of a company experienced in the design and manufacture of grinder pumps specifically designed for use in low pressure systems. All manufacturers proposing equipment for this project shall have at least 10 years of experience in the design and manufacture of units of identical size(s) and performance to the specified units. All manufacturers proposing equipment for this project must also have not less than 500 successful installations of low-pressure sewer systems utilizing grinder pumps of like type to the grinder pumps specified herein. An installation is defined as a minimum of 25 pumps discharging into a common force main which forms a low pressure sewer system. The contractor (supplier) proposing alternate equipment shall also submit, as part of the bid schedule, an installation list with contact person(s), phone number(s) and date(s) of at least 10 installations of the type of pump specified herein that have been in operation for at least 10 years.

In lieu of this experience clause, the contractor (supplier) of alternate equipment will be required to submit a 5-year performance bond for 100 percent of the stipulated cost of the equipment as bid and as shown in the Bid Schedule. This performance bond will be

used to guarantee the replacement of the equipment in the event that it fails within the bond period.

1.05 OPERATING CONDITIONS: The pumps shall be capable of delivering 31 GPM against a rated total dynamic head of 82 feet (35 PSIG). The pump(s) must also be capable of operating at negative total dynamic head without overloading the motor(s). Under no conditions shall in-line piping or valving be allowed to create a false apparent head.

1.06 WARRANTY: The grinder pump MANUFACTURER shall provide a part(s) and labor warranty on the complete station and accessories, including, but not limited to, the panel for a period of 36 months after receipt of shipment. Any manufacturing defects found during the warranty period will be reported to the MANUFACTURER by the OWNER and will be corrected by the MANUFACTURER at no cost to the OWNER.

1.07 WARRANTY PERFORMANCE CERTIFICATION: As a bid certification requirement, each bidder shall provide with their bid schedule a Warranty Performance Certification statement executed by the most senior executive officer of the grinder pump MANUFACTURER, which certifies a minimum of a 36-month warranty. They must further detail any exclusions from the warranty or additional cost items required to maintain the equipment in warrantable condition, including all associated labor and shipping fees, and certify that the MANUFACTURER will bear all costs to correct any original equipment deficiency for the effective period of the warranty. All preventive maintenance type requirements shall be included in this form as exclusions. These requirements include, but are not limited to, unjamming of grinder mechanism, periodic motor maintenance, and periodic cleaning of liquid level controls. Should the CONTRACTOR (supplier) elect to submit a performance bond in lieu of the experience clause outlined above, this Warranty Performance Certification shall also be used as a criterion to evaluate the CONTRACTOR'S (supplier's) performance over the warranty period. A Warranty Performance Certification form is included with the bid schedule and must be completed and submitted as part of the bid package. Bids with incomplete forms or missing forms will be considered nonresponsive.

PART 2 - PRODUCTS

2.01 TANK: The dimensions of the basin shall be based on the required site conditions as shown on the plans. The basin shall be provided with a minimum depth of 108". The basin shall be made from a fiberglass reinforced polyester resin. The resins used shall be a commercial grade polyester and shall be evaluated as a laminate by test or determined by previous service to be acceptable for the intended environment. The reinforcing material shall be a commercial grade of glass fiber having a coupling agent to provide a suitable bond between the glass reinforcement and the resin. The manufacturer may supply either (continuous strand, chopped-strand, continuous mat, and/or non-continuous mat) or (non-continuous glass strands having fiber lengths from 0.5 to 2.0 inches). The basin shall be water-tight.

The inner surface shall be smooth and free of cracks, exposed fibers, porosity, and crazing. The exterior surface shall be relatively smooth without exposed fibers or sharp projections. Wall thickness shall vary depending on basin height, to provide necessary strength to meet tensile and flexural physical property requirements. The tank wall and bottom must be designed to withstand 150 percent the pressure exerted by saturated soil loading at maximum burial depth. All station components must function normally when exposed to 150 percent of the maximum external soil and hydrostatic pressure.

The wet well FRP bottom laminate shall have less than 0.375 inches of center elastic deflection (deformation) when in service in totally submerged conditions. The finished FRP laminate will have a Barcol Hardness of at least 90% of the resin manufacturer's specified hardness for the fully cured resin. The Barcol Hardness shall be the same for

both interior and exterior surfaces. The wet well top flange shall have an outside diameter at least 4.0 inches greater than the inside diameter of the wet well. A six-hole pattern shall accommodate the mounting of a cover with at least 0.375 inches in diameter 300 series stainless steel fasteners. Non-corroding stainless steel threaded inserts shall be fully encapsulated with noncontinuous mat or chopped-strand glass fiber reinforcement. The inserts shall have an offset tab to prevent stripping or spinning out when removing and reinserting cover fasteners.

The steel anti-floatation flange shall be constructed from 0.1875 inches thick ASTM A36 structural steel plate, encapsulated in at least 0.125 inches of chopped-strand glass fiber reinforcement on all sides. The steel anti-floatation flange shall be square with outside dimensions of at least 4.0 inches greater than the wet well inside diameter. The steel anti-floatation flange shall be attached to the wet well bottom with chopped-strand glass fiber reinforcement. CONTRACTOR shall place the wet well on a concrete pad and fill with grout covering the entire steel anti- floatation flange. The amount of concrete shall be sufficient to prevent floatation of the wet well based on the site conditions. The steel anti-floatation flange shall not require bolt holes to secure it to the concrete pad.

A. Basin Cover: May be constructed of fiberglass, aluminum, or steel and may include an access hatch of single or double-leaf design.

The solid fiberglass cover shall be constructed with continuous mat or chopped-strand glass fiber reinforcement with a minimum thickness of 0.325 inches. The cover shall be green in color.

The aluminum cover shall be constructed of 0.250 inches thick mill finish in diamond plate pattern with 300 series stainless steel hardware. The access hatch shall have a recessed handle and locking pin. The hatch shall be held open in the vertical position by means of a hold open arm of corrosion resistant design.

The steel cover shall be constructed of 0.375 inches thick black enameled ASTM A36 structural steel plate. The access hatch shall have a recessed handle and locking pin. The hatch shall be held open in the vertical position by means of a positive locking arm of corrosion resistant design.

B. Electrical Connections: The fiberglass basin shall have polyethylene bulkhead fittings or a stainless steel fitting plate, terminating outside the tank wall with ¾” pipe thread. The fittings or plate shall be factory installed and sealed to guarantee watertight connection. There shall be (1) fitting for each pump supply cable and (1) fitting for the float cable.

C. Inlet Penetration: An EPDM grommet for use with 4” SCH40 or SDR35 pipe shall be included for field installation by CONTRACTOR. Hub shall have a six bolt pattern and include a hardware kit, consisting of stainless steel bolts, washers, nuts, and foam adhesive gasket. The pipe grommet or hub shall be the primary method of seal and shall not require any secondary sealing materials.

D. Vent Penetration: The tank shall be vented by means of a factory-provided, field-installed vent kit. A vent grommet for use with 2” DWV pipe shall be provided for field-installation into the tank wall. Vent line shall be terminated in 2” mushroom-style, non-corrosive ABS vent cap with activated carbon media for odor prevention

E. DISCHARGE: A stainless steel discharge wye fitting with two 1-1/4” NPT connections shall be factory installed in basin, to terminate on exterior tank wall. The discharge penetration shall be sealed and watertight. Inside the basin, one quick disconnect discharge fitting shall be provided per pump and fitting shall act as a gate valve, to prevent fluid backflow into basin when closed.

2.02 Grinder Pump: The pump shall have a non-overloading maximum capacity of over 31 GPM and a maximum total dynamic head of 82 feet. The pump shall also be capable of

operating at negative total dynamic head. The quantity of pumps installed shall be as shown in the plans.

A. Grinder Pump Construction: Pump shall be of the centrifugal-type with integral grinder mechanism and submersible type motor. The grinder shall be capable of macerating all material in normal domestic and commercial sewage, including reasonable amounts of foreign objects, to small particles which can freely pass through the pump and the 1-1/4" discharge piping. For easy serviceability, the pump shall be assembled as a single core unit, including motor, grinder, pump, valves, power cord, and quick disconnects for electrical and discharge.

Castings and major components shall be of gray cast iron, ASTM A48, Class 35 with smooth surfaces without irregularities. All exposed hardware shall be 304 stainless steel. All metal surfaces in contact with pumped fluids, which are not stainless steel, shall be protected by a factory-applied multi-layer exterior coating.

Sealing design shall incorporate metal-to-metal contact between machined surfaces. Where watertight sealing is required, surfaces shall be machined and fitted with O-rings, designed, and constructed to meet FM3615 for Class 1, Division 1, Groups C & D standards. Fittings will be the result of controlled compression of rubber O-rings in two planes and O-ring contact of four sides without the requirement of a specific torque limit. No secondary sealing compounds, elliptical O- rings, grease, or other devices shall be used.

B. Grinder Mechanism: Grinding mechanisms are available as either axial slicer or radial grinder. The axial slicer mechanism is comprised of (3) rotary slicer blades and a stationary slicer plate, both of 440C stainless steel material hardened to 58-60 Rockwell C. Slicer shall be bolted to shaft within close tolerance of slicer plate. The slicer plate shall be of engineered design with holes shaped for optimum cutting of debris. Grooved slots in plate shall eject debris away from underside of rotary cutter. The plate shall be fastened with countersunk head screws, flush with the surface of plate. Pumps with protruded or exposed head fasteners shall not be considered equal.

Radial grinder mechanism consists of rotating impeller and stationary shredder ring, both of 440 stainless steel material hardened to 58-60 Rockwell C. Grinder assembly shall be mounted directly below volute passage. The impeller shall be threaded to a stainless steel shaft, locked with a stainless steel screw and washer. The shredder ring shall be secured with a retaining ring, bolted into cast-iron volute. Grinding of solids shall be from the action of the impeller against the shredder ring, where there shall be 24,000 cuts per second.

C. Stator/ Rotor: The rotor shall be a full lobe design of hardened and polished stainless steel. The stator shall be composed of a proprietary EPDM blend, designed, and tested specifically for improved use in domestic and commercial wastewater applications. Stator material shall have high resistance to water, detergent, grease, petroleum, abrasives, and temperature. Stator to be encapsulated by high density polyethylene nylon liner, to stabilize stator when in use and provide for longer stator life.

D. Motor: The pump motor construction shall be per NEMA MG-1 1.15 standard and shall be of the submersible type, rated 2 HP, 3450 RPM, 240 volt, 60 Hz, single phase operation. Motor shall be capacitor start, capacitor run type for high starting torque and both capacitors and start switch shall be housed internally to pump, below the cord entry. This compartment shall be dry and accessible by removing (4) bolts from cord cap for quick serviceability. Major motor operating temperature must not exceed Class B rating.

The stator winding shall be of open type with Class F insulation. The stator shall be pressed into the cast iron motor housing. Winding housing shall be filled with clean, high

dielectric oil that lubricates bearings and seals, transferring heat from windings and rotor to the outer cast housing for improved heat dissipation. Air-filled housings or motors of any other construction type shall not be considered equal

Motor shall have automatic reset overload protection attached to the top end of the motor windings to stop motor if winding temperature reaches 130°C. The high temperature shut-off will cause the pump to cease operation in a run-dry event or in any condition that may cause pump to run outside of specified operating temperature range. All motors shall be manufactured domestically. Pump manufacturer shall test each motor prior to pump construction and shall provide, upon request, documentation to certify motor operation is within design parameters.

E. Mechanical Seal: Mechanical seal shall be type 21 and manufactured domestically. Standard pump shall have a single mechanical seal, though dual mechanical seals are an available option for increased motor protection. Seal material shall be silicon carbide with Viton® elastomers and the seal face shall be lapped to a flatness of one light band. Carbon ceramic seals shall not be considered equal.

F. Bearings: The motor shall have two heavy duty ball bearings and one sleeve bearing to support the pump shaft, taking radial and thrust loadings. Bearings shall be designed to an ABEC® system 1 or better. The upper bearing shall be a Conrad type, single-row, deep groove ball bearing designed to adequately handle the required radial loads. The lower bearing shall be a single row, deep groove ball bearing designed to adequately compensate for the axial loads and radial forces. Bearings shall be designed to deliver a minimum L-10 bearing life of 100,000 hours when operation is within the limitations of the manufacturer's performance curve. The bearings shall be lubricated in oil and will not require maintenance as described in ANSI/HI 1.4-2010 A.6.

G. Valves: The discharge piping of the pump shall include a factory-installed combination anti-siphon check valve and pressure relief valve in 316 stainless steel material. The anti-siphon check valve shall be rated for continuous operation to 235 psi. The pressure relief valve shall be factory-set to begin opening at 70 psi and shall be fully open at 100 psi.

H. Pump Discharge: Pump discharge shall be a 1-1/4" FPT connection. The discharge hose shall be constructed of a high pressure, oil resistant material and terminate in a 1-1/4" MPT fitting on pump side. On tank side, the discharge hose shall terminate in a quick connect fitting for ease of installation. Hose shall be rated to 150 psi.

I. Electrical and Power Cord: The power cord shall be 12 awg Type SOOW, UL listed cable. The cable jacket shall be sealed at the motor entrance by means of an approved rubber compression washer and compression nut. The cord cap is to be epoxy-filled to seal the outer cable jacket and leads, preventing fluid from entering motor housing. Cord shall withstand a pull strain to meet FM requirements. Power cord shall measure a minimum of 5 feet from cord cap and shall terminate in an electrical quick disconnect (EQD). A cord grip shall be used at the EQD to ensure a watertight seal to cable.

2.03 Electrical Components

A. Supply Cables: The pump supply cable(s) and float supply cable shall terminate in six pin EQDs, with water- resistant housings inside the basin. Housings shall include radial seals and shall require no tools for assembly/disassembly. A junction box shall not be considered equal for use inside the basin. Cables shall be a minimum of twenty-five feet for connection to the control panel.

B. Level Controls: Level control shall be through non-mercury, mechanical float switches with minimum (3) floats per basin. Floats shall be control duty rated, narrow angle, normally open type and shall be approved for use in sewage or wastewater

environments. Operating temperature range shall be between 32°F-170°F. Construction material shall be polypropylene with solid polyurethane foam interior. Individual power cords shall be 18 awg, type SJOOW cable constructed of chlorinated polyethylene material. Electrical rating shall be 5 amp (240V) / 10 amp (120V). Floats shall be mounted to float tree with (1) mounting collar per float and shall be capable of field adjustment. Float tree shall have a fixed, factory-installed mounting connection inside basin and shall be completely removable from basin for access to floats. Exterior or interior weights shall not be used. Floats shall terminate (1) 6-pin EQD for a single connection to float supply cable.

C. Control Panel: Each station shall include a NEMA 4X UL-listed panel suitable for vertical mounting. The panel enclosure shall be of fiber-reinforced plastic material for corrosion resistance and include a hinged, lockable cover.

The panel shall contain one 15-amp, double-pole circuit breaker for each pump's power circuit and one 15-amp single-pole circuit breaker for the alarm circuit. The following features shall also be included as a standard: H-O-A switch for each pump, external visual alarm light, external audible buzzer, silence button, redundant run, high level alarm capability, and SAM-capability. Pump operation in duplex stations shall be in alternating sequence. Each pump shall alternate roles as either Lead or Lag after each pump cycle. Lag pump operation shall be linked to the Alarm float terminal in the control panel, which will activate the Lag Pump in the event that the fluid level has risen to the Alarm level in the basin. Provided power is available to panel, the alarm shall be activated as follows:

1. Fluid in wet well rises to ALARM level and ALARM float switch contacts will close. The audible and visual alarms shall be activated.
2. The audible siren may be silenced by pressing the external silence button.
3. Visual alarm light will remain illuminated while ALARM float contacts are engaged.

(SAM) Remote Monitoring: The SAM hardware kit will consist of a cellular modem, power supply, wiring harness and relays and is designed for installation into an existing panel enclosure. The hardware kit shall be connected to dry contacts in the existing panel for alarm and pump data. A cellular modem will then communicate data to a web-based platform, including high level alarm, power loss, pump cycles, and run time information. Once information is transmitted to the system, it will be available for users to access through the website interface.

Users may be given a secure user ID and password by their local distributor or service center, upon request, to access the website. The website shall display "trouble" indicators for easy identification of sites experiencing an alarm condition. Users with multiple sites will have the ability to generate reports based on pump run cycle data or alarm conditions.

Local distributors and designated master users will have the ability to configure alerts for the various conditions, which can be sent via e-mail or SMS text to any number of recipients.

Available alert notifications shall include:

- High Level Alarm
- High Level Alarm Clear
- Power Loss
- Power Restored

Included in the cellular modem is a battery to allow one message to be communicated in the event of a power loss.

D. Generator Receptacle and Auto Transfer: The panel will include a 20 amp, 240V receptacle with gasketed cover for use with a portable generator and cable. Panel will be configured such that when power is present at the receptacle, the power source will be automatically switched to the generator. When power is no longer present at the receptacle, the power source will automatically switch back to main (AC) power.

E. Main Service Disconnect Breaker: A separate breaker shall be installed in the panel for use as a main service disconnect for the station.

2.04 Service and Installation

1) The pump core shall have two lifting eyes bolted to pump housing and the end of a lifting rope shall be securely attached to each eye for easy core removal. The pump shall include a stainless steel base stand, factory installed, to hold the pump upright in the station or as necessary during service. Quick disconnects shall be provided on the electrical power cord and the discharge hose.

2) All maintenance for the pump core, including installation and removal, must be possible without maintenance personnel entering the station. OSHA requirements may deem a grinder pump station installation to be a “permit-required confined space”, therefore pump must be accessible and serviceable from outside the station. The pump manufacturer may designate an authorized service center to provide technical expertise, stock equipment, train internal and/or third-party service technicians, provide field and/or shop repair service, and make judgements regarding warranty claims.

2.05 Factory Test

1) Each pump core shall be tested at the factory to ensure pump components, including valves, discharge assembly, and motor operate within the design parameters. Pump manufacturer shall provide certified test results upon request.

PART 3 - EXECUTION

3.01 FACTORY TEST: Each grinder pump shall be submerged and operated for 1.5 minutes (minimum). Included in this procedure will be the testing of all ancillary components such as, the anti-siphon valve, check valve, discharge assembly and each unit’s dedicated level controls and motor controls. All factory tests shall incorporate each of the above listed items. Actual appurtenances and controls which will be installed in the field shall be particular to the tested pump only. A common set of appurtenances and controls for all pumps is not acceptable. Certified test results shall be available upon request showing the operation of each grinder pump at two different points on its curve. Additional validation tests include: integral level control performance, continuity to ground and acoustic tests of the rotating components.

The ENGINEER reserves the right to inspect such testing procedures with representatives of the OWNER, at the GRINDER PUMP MANUFACTURER’S facility.

All basins shall be factory leak tested to assure the integrity of all joints, seams, and penetrations. All necessary penetrations such as inlets, discharge fittings and cable connectors shall be included in this test along with their respective sealing means (grommets, gaskets etc.).

3.02 CERTIFIED SERVICE PROGRAM: The grinder pump MANUFACTURER shall provide a program implemented by the MANUFACTURER’S personnel as described in this specification to certify the service company as an authorized serviced center. As evidence of this, the MANUFACTURER shall provide, when requested, sufficient evidence that they have maintained their own service department for a minimum of 30 years and currently employ a minimum of five employees specifically in the service department.

As part of this program, the MANUFACTURER shall evaluate the service technicians as well as the service organization annually. The service company will be authorized by the MANUFACTURER to make independent warranty judgments. The areas covered by the program shall include, as a minimum:

1. Pump Population Information: The service company will maintain a detailed database for the grinder pumps in the territory that tracks serial numbers by address.
2. Inventory Management: The service company must maintain an appropriate level of inventory (pumps, tanks, panels, service parts, etc.) including regular inventory review and proper inventory labeling. Service technicians will also maintain appropriate parts inventory and spare core(s) on service vehicles.
3. Service Personnel Certification: Service technicians will maintain their level-specific certification annually. The certifications are given in field troubleshooting, repair, and training.
4. Service Documentation and Records: Start up sheets, service call records, and customer feedback will be recorded and available by the service company.
5. Shop Organization: The service company will keep its service shop organized and pumps will be tagged with site information at all times. The shop will have all required equipment, a test tank, and cleaning tools necessary to service pumps properly.

3.03 DELIVERY: All grinder pump units will be delivered to the job site 100 percent completely assembled, including testing, ready for installation. Field installation of the pump in tanks under 96 inches is not allowed. Field installation of the level sensor into the tank is not allowed. Grinder pump stations will be individually mounted on wooden pallets.

3.04 INSTALLATION: Earth excavation and backfill are specified under SITE WORK, but are also to be done as a part of the work under this Section, including any necessary sheeting and bracing.

The CONTRACTOR shall be responsible for handling ground water to provide a firm, dry subgrade for the structure, and shall guard against flotation or other damage resulting from general water or flooding.

The grinder pump stations shall not be set into the excavation until the installation procedures and excavation have been approved by the ENGINEER.

Remove packing material. Users instructions MUST be given to the OWNER. Hardware supplied with the unit, if required, will be used at installation. The basin will be supplied with a standard 4" inlet grommet (4.50" OD) for connecting the incoming sewer line. Appropriate inlet piping must be used. The basin may not be dropped, rolled, or laid on its side for any reason.

Installation shall be accomplished so that 1" to 4" of accessway, below the bottom of the lid, extends above the finished grade line. The finished grade shall slope away from the unit. The diameter of the excavated hole must be large enough to allow for the concrete anchor.

A 6-inch (minimum) layer of naturally rounded aggregate, clean and free flowing, with particle size of not less than 1/8" or more than 3/4" shall be used as bedding material under each unit.

A concrete anti-flotation collar, as detailed on the drawings, and sized according to the manufacturer’s instructions, shall be required and shall be pre-cast to the grinder pump or poured in place. Each grinder pump station with its pre-cast anti-flotation collar shall have a minimum of three lifting eyes for loading and unloading purposes.

If the concrete is poured in place, the unit shall be leveled, and filled with water, to the bottom of the inlet, to help prevent the unit from shifting while the concrete is being poured. The concrete must be manually vibrated to ensure there are no voids. If it is necessary to pour the concrete to a level higher than the inlet piping, an 8" sleeve is required over the inlet prior to the concrete being poured.

The CONTRACTOR will provide and install a 4-foot piece of 4-inch SCH 40 PVC pipe with water tight cap, to stub-out the inlet for the property OWNER's installation contractor, as depicted on the contract drawings.

The electrical enclosure shall be furnished, installed, and wired to the grinder pump station by the CONTRACTOR. An alarm device is required on every installation, there shall be NO EXCEPTIONS. It will be the responsibility of the CONTRACTOR and the ENGINEER to coordinate with the individual property OWNER(s) to determine the optimum location for the Alarm Panel.

The CONTRACTOR shall mount the alarm device in a conspicuous location, as per national and local codes. The alarm panel will be connected to the grinder pump station by a length of 6-conductor type TC cable as shown on the contract drawings. The power and alarm circuits must be on separate power circuits. The grinder pump stations will be provided with 32', 25' of useable, electrical supply cable to connect the station to the alarm panel. This cable shall be supplied with a FACTORY INSTALLED EQD half to connect to the mating EQD half on the core.

3.05 BACKFILL REQUIREMENTS: Proper backfill is essential to the long-term reliability of any underground structure. Several methods of backfill are available to produce favorable results with different native soil conditions. The most highly recommended method of backfilling is to surround the unit to grade using Class I or Class II backfill material as defined in ASTM 2321. Class 1A and Class 1B are recommended where frost heave is a concern, Class 1B is a better choice when the native soil is sand or if a high, fluctuating water table is expected. Class 1, angular crushed stone offers an added benefit in that it doesn't need to be compacted.

Class II, naturally rounded stone, may require more compactive effort, or tamping, to achieve the proper density. If the native soil condition consists of clean compactible soil, with less than 12 percent fines, free of ice, rocks, roots, and organic material, it may be an acceptable backfill. Soil must be compacted in lifts not to exceed one foot to reach a final Proctor Density of between 85 percent and 90 percent. Heavy, non-compactible clays and silts are not suitable backfill for this or any underground structure such as inlet or discharge lines.

If you are unsure of the consistency of the native soil, it is recommended that a geotechnical evaluation of the material is obtained before specifying backfill.

Another option is the use of a flowable fill (i.e., low slump concrete). This is particularly attractive when installing grinder pump stations in augured holes where tight clearances make it difficult to assure proper backfilling and compaction with dry materials. Flowable fills should not be dropped more than 4 feet from the discharge to the bottom of the hole to avoid separation of the constituent materials.

Backfill of clean native earth, free of rocks, roots, and foreign objects shall be thoroughly compacted in lifts not exceeding 12" to a final Proctor Density of not less than 85 percent. Improper backfilling may result in damaged accessways. The grinder pump station shall be installed at a minimum depth from grade to the top of the 1 1/4" discharge line, to assure maximum frost protection. The finish grade line shall be 1" to 4" below the bottom of the lid, and final grade shall slope away from the grinder pump station.

All restoration will be the responsibility of the CONTRACTOR. Per unit costs for this item shall be included in the CONTRACTOR'S bid price for the individual grinder pump stations. The properties shall be restored to their original condition in all respects, including, but not limited to, curb and sidewalk replacement, landscaping, loaming and seeding, and restoration of the traveled ways, as directed by the ENGINEER.

3.06 START-UP AND FIELD TESTING: The MANUFACTURER shall provide the services of qualified factory trained technician(s) who shall inspect the placement and wiring of each station, perform field tests as specified herein, and instruct the OWNER's personnel in the operation and maintenance of the equipment before the stations are accepted by the OWNER.

All equipment and materials necessary to perform testing shall be the responsibility of the INSTALLING CONTRACTOR. This includes, as a minimum, a portable generator and power cable (if temporary power is required), water in each basin (filled to a depth sufficient to verify the high level alarm is operating), and opening of all valves in the system. These steps shall be completed prior to the qualified factory trained technician(s) arrival on site.

The services of a trained factory-authorized technician shall be provided at a rate of 40 hours for every 100 grinder pump stations supplied.

A. Upon completion of the installation, the authorized factory technician(s) will perform the following test on each station:
   1. Make certain the discharge shut-off valve in the station is fully open.
   2. Turn ON the alarm power circuit and verify the alarm is functioning properly.
   3. Turn ON the pump power circuit. Initiate the pump operation to verify automatic "on/off" controls are operative. The pump should immediately turn ON.
   4. Consult the Manufacturer's Service Manual for detailed start-up procedures.

Upon completion of the start-up and testing, the MANUFACTURER shall submit to the ENGINEER the start-up authorization form describing the results of the tests performed for each grinder pump station. Final acceptance of the system will not occur until authorization forms have been received for each pump station installed and any installation deficiencies corrected.

END OF SECTION

SECTION 40 0500.13 – COMMON WORK RESULTS FOR PROCESS PIPING

PART 1 - GENERAL

1.01 THE REQUIREMENT

A. Provide all piping systems indicated, complete and operable, in accordance with these Specifications and Contract Documents.

B. The mechanical drawings define the general layout, configuration, routing, method of support, pipe size and pipe type. The mechanical drawings are not pipe construction or fabrication drawings. Details for construction shall be developed as necessary to construct all mechanical piping systems, to accommodate the specific equipment provided, and to provide all spools, spacers, adapters, and connectors for a complete and functional system.

C. American Iron and Steel (AIS) requirement applies to this Section. All iron and steel products used in this project must be produced in the United States.

1.02 SUBMITTALS

A. Submittals shall be furnished in accordance with Section 01 3300 – Submittal Procedures.

B. Shop Drawings shall contain the following information:

1. Drawings: Layout drawings including all necessary dimensions, details, pipe joints, fittings, specials, bolts and nuts, gaskets, valves, appurtenances, anchors, guides, and material lists. Fabrication drawings shall indicate all spool pieces, spacers, adapters, connectors, fittings and supports to accommodate the equipment and valves in a complete and functional system.

C. Certifications: All necessary certificates, test reports, and affidavits of compliance shall be obtained.

PART 2 - PRODUCTS

2.01 GENERAL

A. Extent of Work: Pipes, fittings and appurtenances shall be provided in accordance with the requirements of these Specifications and as indicated.

B. Pipe Supports: Pipes shall be adequately supported, restrained, and anchored in accordance with these Specifications, and as indicated.

C. Lining: Application, thickness and curing of pipe lining shall be in accordance with these Specifications, unless otherwise indicated.

D. Coating: Application, thickness and curing of pipe coating shall be in accordance with these Specifications, unless otherwise indicated. Pipes above ground or in structures shall be field-coated in accordance these Specifications.

E. Pressure Rating: Piping systems shall be designed for the maximum expected pressure as defined in accordance with these Specifications, or as indicated on the Piping Schedule.

F. Inspection: Pipe shall be subject to inspection at the place of manufacture. During the manufacture of the pipe, the ENGINEER shall be given access to all areas where manufacturing is in progress and shall be permitted to make all inspections necessary to confirm compliance with requirements.

G. Tests: Except where otherwise indicated, materials used in the manufacture of the pipe shall be tested in accordance with the applicable specifications and standards. Welds shall be tested as indicated.

H. Welding Requirements: Welding procedures used to fabricate pipe shall be prequalified under the provisions of ANSI/AWS D1.1 - Structural Welding Code. Welding procedures shall be reviewed for longitudinal and girth or spiral welds for pipe cylinders, spigot, and bell ring attachments, reinforcing plates and ring flange welds, and plates for lug connections.

I. Welder Qualifications: Welding shall be done by skilled welders and welding operators who have had adequate experience in the methods and materials to be used. Welders shall be qualified under the provisions of ANSI/AWS D1.1 by an independent local, approved testing agency not more than 6 months prior to commencing work on the pipeline. Machines and electrodes similar to those used in the WORK shall be used in qualification tests. Qualification testing of welders and materials used during testing are part of the WORK.

2.02 PIPE FLANGES

A. General: Flanges shall have flat faces and shall be attached with bolt holes straddling the vertical axis of the pipe unless otherwise indicated. Attachment of the flanges to the pipe shall conform to the applicable requirements of ANSI/AWWA C207. Flange faces shall be perpendicular to the axis of the adjoining pipe. Flanges for miscellaneous small pipes shall be in accordance with the standards indicated for these pipes.

B. Pressure Ratings:
   1. 150 psi or less: Flanges shall conform to either ANSI/AWWA C207 - Steel Pipe Flanges for Waterworks Service--Sizes 4-inch. Through 144-inch, Class D, or ANSI/ASME B16.5 - Pipe Flanges and Flanged Fittings, 150-lb class.
   2. 150 psi to 275 psi: Flanges shall conform to either ANSI/AWWA C207 Class E or Class F, or ANSI/ASME B16.5 150-lb class.
   3. 275 psi to 700 psi: Flanges shall conform to ANSI/ASME B16.5, 300-lb class.
   4. Selection based on test pressure: AWWA flanges shall not be exposed to test pressures greater than 125 percent of rated capacity. For higher test pressures, the next higher rated AWWA flange or an ANSI-rated flange shall be selected.

C. Blind Flanges: Blind flanges shall be in accordance with ANSI/AWWA C207, or as indicated for miscellaneous small pipes.

D. Flange Coating: Machined faces of metal blind flanges and pipe flanges shall be coated with a temporary rust-inhibitive coating to protect the metal until the installation is completed.

E. Flange Bolts: Bolts and nuts shall conform to these Specifications. Bolts and nuts shall be installed with anti-seize per Loctite, or ENGINEER-approved equal (or thread locker to be confirmed with WWTP Operations). Studs and bolts shall extend through the nuts a minimum of ¼-inch. All-thread studs shall be used on all valve flange connections, where space restrictions preclude the use of regular bolts.

F. Insulating Flanges: Insulated flanges shall have bolt holes ¼-inch diameter greater than the bolt diameter.

G. Insulating Flange Sets: Insulating flange sets shall be provided where indicated or as needed. Each insulating flange set shall consist of an insulating gasket, insulating sleeves and washers and a steel washer. Insulating sleeves and washers shall be one piece when flange bolt diameter is 1½-inch or smaller and shall be made of acetal resin. For bolt diameters larger than 1½-inch, insulating sleeves and washers shall be 2-piece and shall be made of polyethylene or phenolic material. Steel washers shall be in accordance with ASTM A325 - Structural Bolts, Steel, Heat Treated, 120/105 ksi Minimum Tensile Strength. Insulating gaskets shall be full-face.

H. Flange Gaskets:
   1. Gaskets for flanged joints used in general water and wastewater service shall be full-faced type, with material and thickness in accordance with ANSI/AWWA C207. Blind flanges shall have gaskets covering the entire inside face of the blind flange and shall be cemented to the blind flange. Ring gaskets shall not be permitted, unless otherwise indicated.
   2. Gaskets for flanged joints used in chemicals, air, solvents, hydrocarbons, steam, chlorine, and other fluids shall be made of materials compatible with the service, pressure, and temperature.

2.03 THREADED INSULATING CONNECTIONS

A. General: Threaded insulating bushings, unions, or couplings, as appropriate, shall be used for joining threaded pipes of dissimilar metals and for piping systems where corrosion control and cathodic protection are involved.

B. Materials: Threaded insulating connections shall be of nylon, Teflon, polycarbonate, polyethylene, or other non-conductive materials, and shall have ratings and properties to suit the service and loading conditions.

2.04 MECHANICAL-TYPE COUPLINGS (GROOVED OR BANDED PIPE)

A. General: Cast mechanical-type couplings shall be provided where indicated. The couplings shall conform to the requirements of ANSI/AWWA C606 - Grooved and Shouldered Joints. Bolts and nuts shall conform to the requirements of these Specifications. Gaskets for mechanical-type couplings shall be compatible with the piping service and fluid utilized, in accordance with the coupling manufacturer's recommendations. The wall thickness of grooved piping shall conform with the coupling manufacturer's recommendations to suit the highest expected pressure. To avoid stress on equipment, equipment connections with mechanical-type couplings shall have rigid-grooved couplings or flexible type coupling with harness in sizes where rigid couplings are not available, unless thrust restraint is provided by other means. Mechanical-type couplings shall be bonded. The Subcontractor shall have the coupling manufacturer's service representative verify the correct choice and application of couplings and gaskets, and the workmanship, to assure a correct installation. To assure uniform and compatible piping components, all grooved fittings, couplings, and valves shall be from the same manufacturer.

2.05 SLEEVE-TYPE COUPLINGS

A. Construction: Sleeve-type couplings shall be provided where indicated, in accordance with ANSI/AWWA C219 - Standard for Bolted Sleeve-Type Couplings for Plain-End Pipe. Couplings shall be steel with steel bolts, without pipe stop. Couplings shall be of sizes to fit the pipe and fittings indicated. The middle ring shall be not less than ¼-inch thick or at least the same wall thickness as the pipe to which the coupling is connected. If the strength of the middle ring material is less than the strength of the pipe material, the thickness of the middle ring shall be increased to have the same strength as the pipe. The coupling shall be either 5 or 7 inches long for sizes up to and including 30 inches and 10 inches long for sizes greater than 30 inches, for standard steel couplings, and 16 inches long for long-sleeve couplings. The followers shall be single-piece contoured mill sections welded and cold-expanded as required for the middle rings, and of sufficient strength to accommodate the number of bolts necessary to obtain adequate gasket pressures without excessive rolling. The shape of the follower shall be of such design as to provide positive confinement of the gasket. Bolts and nuts shall conform to the requirements of these Specifications. Buried sleeve-type couplings shall be epoxy-coated at the factory as indicated.

B. Pipe Preparation: Where indicated, the ends of the pipe shall be prepared for flexible steel couplings. Plain ends for use with couplings shall be smooth and round for a distance of 12 inches from the ends of the pipe, with outside diameter not more than 1/64-inch smaller than the nominal outside diameter of the pipe. The middle ring shall be tested by cold-expanding a minimum of one percent beyond the yield point, to proof-test the weld to the strength of the parent metal. The weld of the middle ring shall be subjected to air test for porosity.

C. Gaskets:
   1. Gaskets for sleeve-type couplings shall be rubber-compound material that will not deteriorate from age or exposure to air under normal storage or use conditions. Gaskets for wastewater and sewerage applications shall be Buna "N," Grade 60, or ENGINEER-approved equivalent suitable elastomer. The rubber in the gasket shall meet the following specifications:
      a. Color: Jet Black
      b. Surface: Non-blooming
      c. Durometer Hardness: 74 plus and minus 5
      d. Tensile Strength: 1000 psi Minimum
      e. Elongation: 175 percent Minimum
   2. The gaskets shall be immune to attack by impurities normally found in water or wastewater. All gaskets shall meet the requirements of ASTM D2000 - Classification System for Rubber Products in Automotive Applications, AA709Z, meeting Suffix B13 Grade 3, except as noted above. Where sleeve couplings are used in water containing chloramine or other fluids, which attack rubber materials, gasket material shall be compatible with the piping service and fluid utilized.

D. Insulating Couplings: Where insulating couplings are required, both ends of the coupling shall have a wedge-shaped gasket which assembles over a rubber sleeve of an insulating compound in order to obtain insulation of all coupling metal parts from the pipe.

E. Restrained Joints: Sleeve-type couplings on pressure lines shall be harnessed unless thrust restraint is provided by other means. Harnesses shall be designed by the pipe manufacturer in accordance with AWWA Manual M11, or as indicated. Harness sets shall be designed for the maximum test pressure of the pipe in which they are installed. Where harness sets are installed near the suction and discharge of the pump, harness bolts shall have zero elongation to prevent misalignment of the pump imparted by the thrust within the piping system.

2.06 DISMANTLING JOINTS

A. General: Dismantling joints shall be provided where indicated, and provide up to 5” of longitudinal adjustment and up to 2 degrees of misalignment in flanged piping systems. The flange spool shall meet the requirements of AWWA Class D Ring Flange, compatible with ANSI Class 125 and 150 bolt circles. The end and body ring shall meet the requirements of ASTM A536 ductile iron meeting or exceeding Grade 65-45-12 for 3” to 12” sizes and ASTM A36 Carbon Steel with AWWA C207 Class D flanges for 14” to 72” sizes. Dismantling joints shall be provided with gaskets compounded for water and sewer service in accordance with ASTM D2000. Dismantling joints shall have a fusion bonded epoxy coating. Bolts and nuts (including tie-rods) shall conform to these Specifications. Dismantling joints shall be per Romac Industries, or ENGINEER-approved equal.

2.07 EXPANSION JOINTS

A. Piping subject to expansion and contraction shall be provided with sufficient means to compensate for such movement without exertion of undue forces to equipment or structures. This may be accomplished with expansion loops, bellow-type expansion joints or sliding-type expansion joints. Expansion joints shall be of stainless steel, monel, rubber, or other materials best suited for each individual service.

2.08 PIPE THREADS

A. Pipe threads shall be in accordance with ANSI/ASME B1.20.1 - Pipe Threads, General Purpose (inch), and be made up with Teflon tape or chemical sealant unless otherwise indicated.

2.09 PIPE INSULATION

A. Pipe thermal insulation for exterior freeze protection shall be self-sealing, flexible, tubular polyolefin/ polyethylene foam insulation. The insulation shall have a low thermal conductivity (not to exceed 0.04 W/mK) and shall have a service temperature range between -330°F and 120°F. Minimum thickness shall be 1 inch. Insulation shall be acceptable for use with heat tracing/ heat tape.

B. Where called out in the Contract Documents, heat tape shall be provided for freeze protection. Heat tape shall be wrap-type cable with built-in thermostat for automatic heat control and energy efficiency. It shall be used in conjunction with foam insulation. The low wattage design shall utilize a 120-volt power with outlet plug. Heat tape shall be manufactured by Wrap-On Co., Inc., or ENGINEER-approved equal.

C. Where called out in the Contract Documents, Pipe insulation for personnel protection against high temperature shall be provided. Protective insulation shall be fiber glass bonded with a thermosetting resin with a jacket designed to protect personnel again accidental contact with hot pipes. The insulation shall be designed to be used on systems operating up to 1000°F. Minimum thickness shall be 1 inch.

2.10 GENERAL

A. Pipes, fittings, and appurtenances shall be installed in accordance with these Specifications.

B. Lined Piping Systems: The lining manufacturer shall take full responsibility for the complete, final product and its application. Pipe ends and joints of lined pipes at screwed flanges shall be epoxy-coated to assure continuous protection.

C. Core Drilling: Where core drilling is required for pipes passing through existing concrete, core drilling locations shall be determined by radiograph of concrete construction to avoid damage to embedded raceways and reinforcing bars.

D. Cleanup: After completion of the WORK, cuttings, joining and wrapping materials, and other scattered debris shall be removed from the Site. The entire piping system shall be handed over in a clean and functional condition.

PART 3 - EXECUTION

3.01 INSTALLATION OF PIPE

A. Piping shall be installed in accordance with manufacturers' recommendation and these Specifications.

END OF SECTION

SECTION 40 0513.53 – DUCTILE, MALLEABLE, AND CAST-IRON ALLOYS PROCESS PIPING

PART 1 – GENERAL

1.01 DESCRIPTION

A. Furnish and install all ductile iron pipe and fittings in accordance with this section.

1.02 REFERENCES

A. Standards of the following agencies are referenced herein: American National Standards Institute (ANSI), American Society for Testing and Materials (ASTM), American Water Works Association (AWWA), Ductile Iron Pipe Research Association (DIPRA).

B. Referenced standards shall be the latest revision.

C. In case of conflict with referenced standards, the provisions of this section shall prevail.

1.03 SUBMITTALS

A. In accordance with Section 01 3300 – Submittal Procedures.

B. Catalog data sheets naming each product to be used identified by manufacturer and type number and additional documentation as required to demonstrate full compliance with this specification.

PART 2 – MATERIALS

2.01 DUCTILE IRON PIPE

A. Pipe shall conform to the following standards as applicable:
   1. AWWA C104: Cement-Mortar Lining for Ductile-Iron Pipe and Fittings for Water.
   2. AWWA C111: Rubber-Gasket Joints for Ductile-Iron Pressure Pipe and Fittings
   3. AWWA C115: Flanges Ductile-Iron Pipe with Threaded Flanges
   4. AWWA C150: Thickness Design of Ductile-Iron Pipe
   5. AWWA C151: Ductile-Iron Pipe, Centrifugally Cast, for Water of Other Liquids
   6. AWWA C606: Grooved and Shouldered Joints

B. Pipe wall thickness for push-on joint and mechanical joint pipe shall be Pressure Class 350 psi minimum, or as indicated in the Contract Documents.

C. Unless otherwise noted or required, all pipe shall have a cement mortar lining with asphaltic seal coat.

2.02 FITTINGS AND SPECIALS

A. Fittings and specials shall be ductile iron and shall conform to the following standards as applicable:
   1. AWWA C104: Cement-Mortar Lining for Ductile-Iron Pipe and Fittings for Water.
   2. AWWA C110: Ductile-Iron and Gray Iron Fittings, 3 inches through 48 inches, for Water and Other Liquids.
   3. AWWA C111: Rubber-Gasket Joints for Ductile-Iron Pressure Pipe and Fittings.
   4. AWWA C153: Ductile-Iron Compact Fittings, 3 inches through 24 inches and 54 inches through 64 inches for Water Service.
   5. AWWA C606: Grooved and Shouldered Joints.

B. Unless otherwise noted or required, either standard or compact fittings may be used.

C. Unless otherwise noted, all fittings shall have a cement mortar lining with asphaltic seal coat.

D. Grooved and flanged fittings shall have center to end dimensions in accordance with AWWA C111, wall thickness in accordance with AWWA C153, and shall be Class 350 minimum, or as indicated in the Contract Documents.

2.03 GROOVED JOINT COUPLINGS

A. In accordance with ASSA C606, except as modified herein.

B. Coupling body shall be ductile iron, ASTM A536

C. All bolts and nuts shall be 316 stainless steel conforming to ASTM A193, Grade B8M, for bolts and ASTM A194, Grade 8M, for nuts.

2.04 TYPE OF JOINTS

A. Buried joints shall be push-on, mechanical joint, or flexible grooved joint unless otherwise shown or required for installation.

B. Exposed joints shall be flanged or rigid grooved unless otherwise shown or required for the installation.

2.05 RESTRAINED PUSH-ON JOINTS

A. Where specified, called for on the drawings, or otherwise required for thrust restraint, push-on joints shall be Flex-Ring as manufactured by American Ductile Iron Pipe, TR Flex as manufactured by US Pipe, or ENGINEER-approved equal. Restrained joint shall provide for joint deflection after assembly.

2.06 RESTRAINED MECHANICAL JOINTS

A. Where specified, called for on the drawings or otherwise required for thrust restraint, mechanical joints shall be made using retainer glands with set screws or clamping lugs. Retainer glands shall be as manufactured by EBAA Iron; Tyler Pipe, or ENGINEER-approved equal.

2.07 FLANGE GASKETS

A. Full face or ring, except that ring gaskets shall be used for sizes 14-inch and greater. Gaskets shall be 1/8-inch thick synthetic rubber for test pressures up to 250 psi. For test pressures greater than 250 psi, provide suitable gasket as recommended by manufacturer.

2.08 FASTENERS EXCEPT GROOVED COUPLINGS

A. 316 stainless steel conforming to ASTM A193, Grade B8M, for bolts and ASTM A194, Grade 8M, for nuts. Bolts and nuts shall be installed with anti-seize per Loctite, or ENGINEER-approved equal (or thread locker to be confirmed with Fire Camp Operations).

B. Washers, where required, shall be of the same material as the nuts.

2.09 POLYETHYLENE ENCASEMENT

A. Buried pipe and fittings shall be protected by polyethylene encasement in accordance with AWWA C105.

2.10 GLASS LINING

A. Where specified or called for on the drawings, ductile iron pipe shall be glass-lined.

B. Glass lining shall consist of vitreous and inorganic material applied to the internal surfaces of pipe and fittings that have been prepared by blasting. The items shall be exposed to an appropriate maturing temperature (above 1400°F), at which point the vitreous and inorganic material fuses to the base metal, forming an integral molecular bond with the base metal. Subsequent coatings will be processed in a similar manner, forcing an integral

molecular bond with the base coast. The entire coating shall be a minimum of 10 mils thick.

C. Lining shall have a hardness of 5 to 6 on the Mohs scale and a density of 2.5-3.0 g/cm³ measured by ASTM D792. The glass lining shall be capable of withstanding a thermal shock of 350°F without crazing, blistering, or spalling. It shall be resistant to corrosion between pH-3 and pH-10 at 125°F.

D. There shall be no visible loss of surface gloss on the lining after immersing a production run sample in an 8% sulfuric acid solution at 125° F for 15 minutes. When tested according to ASTM C283, it shall show a weight loss of not more than 3 mg/in².

E. Provide continuous coverage as tested by a low voltage wet sponge holiday detectors. Only isolated voids due to casting anomalies and representing less than 0.1% of the total glassed surface shall be permitted.

F. Glass lining shall be Ferrock MEH-32 as provided by Fast Fabricators/Water Works Manufacturing, Vitco, or ENGINEER-approved equal.

2.11 DIRECT TAP

A. Ductile iron pipe shall have a minimum wall thickness allowed by ANSI/AWWA C151/A21.51.

B. The maximum direct tap sizes for 3- through 24-inch ductile iron pipe shall be per the following table:

Sizes (in.)	Pressure Class				
	150	200	250	300	350
	Maximum Direct Tap Size (in.)				
3	-	-	-	-	¾
4	-	-	-	-	¾
6	-	-	-	-	1
8	-	-	-	-	1
10	-	-	-	-	1
12	-	-	-	-	1-1/4
14	-	-	1-1/4	1-1/2	1-1/2
16	-	-	1-1/2	2	2
18	-	-	2	2	2
20	-	-	2	2	2
24	-	2	2	2	2

C. All classes of ductile iron pipe 24 inches or larger in diameter can be direct tapped for 2-inch corporation stop.

PART 3 – EXECUTION

3.01 INSTALLATION

A. Install in accordance with the drawings, applicable sections of these specification, applicable section of previously referenced AWWA standards, AWWA C600, and manufacturer's recommendations. In case of conflict, the drawings and specifications shall govern.

END OF SECTION

SECTION 40 0561.53 – WEIR GATES

PART 1 – GENERAL

1.01 THE REQUIREMENT

A. The CONTRACTOR shall provide Weir Gate and appurtenances, complete and operable, in accordance with the Contract Documents.

1.02 SUBMITTALS

A. Furnish submittals in accordance with Section 01 3300 – Submittal Procedures

1.03 REFERENCES

A. Except as modified or supplemented herein, all gates and operators shall conform to the applicable requirements of AWWA C513, latest edition.

PART 2 – PRODUCTS

2.01 GENERAL

A. Gates supplied under this section shall be manufactured by H. Fontaine Ltd., Rodney Hunt or ENGINEER-approved equal.

B. LIFTING MECHANISM

1. Exposed gate valves shall be rising stem, outside screw and yoke (OS&Y) type. The valves shall be handwheel operated with counter-clockwise opening stems. Dual stem arrangements shall be used as indicated and for wide weirs. Manual operators of the types listed in the Contract Documents shall be provided by the gate manufacturer.
2. All bearings and gears shall be totally enclosed in a weather tight housing. The pinion shaft of crank-operated mechanisms shall be constructed of stainless steel and supported by roller or needle bearings.
3. Each manual operator shall be designed to operate the gate under the maximum specified seating and unseating heads by using a maximum effort of 40 lbs (178 N) on the crank or handwheel and shall be able to withstand, without damage, an effort of 80 lbs (356 N).
4. The crank shall be removable and fitted with a corrosion resistant rotating handle. The maximum crank radius shall be 15 inches (381 mm) and the maximum handwheel diameter shall be 24 inches (610 mm).

C. STEM AND COUPLINGS

1. The operating stem shall be of stainless steel designed to transmit in compression at least two (2) times the rated output of the operating manual mechanism with a 40 lbs (178 N) effort on the crank or handwheel.
2. The stem shall have a slenderness ratio (L/r) less than 200. The threaded portion of the stem shall have machine cut threads of the Acme type.
3. For stems in more than one piece and with a diameter of 1¾ inches (45 mm) and larger, the different sections shall be joined together by solid bronze couplings. Stem with a diameter smaller than 1¾ inches (45 mm) shall be pinned to an extension tube. The couplings shall be grooved and keyed and shall be of greater strength than the stem.
4. Stem guides shall be fabricated from type 304L (or 316L) stainless steel. The guide shall be equipped with a UHMWPE bushing. Guides shall be adjustable and spaced in accordance with the manufacturer's recommendation. The L/r ratio shall not be greater than 200.

5. Rising stem gates shall be provided with a clear polycarbonate stem cover. The stem cover shall have a cap and condensation vents as well as a clear mylar position indicating tape. The tape shall be field applied to the stem cover after the gate has been installed and positioned.

D. YOKE. Self-contained gates shall be provided with a yoke made of structural members or formed plates. The maximum deflection of the yoke shall be 1/360 of the gate's span.

2.02 DOWNWARD-OPENING WEIR GATES

A. Downward-opening weir gates shall be Series 40 Downward-Opening Weir Gates as manufactured by H. Fontaine Ltd., or ENGINEER-approved equal.

B. GOVERNING STANDARDS. Except as modified or supplemented herein, all gates and operators shall conform to the applicable requirements of AWWA C513, latest edition.

C. FRAME. The gate frame shall be constructed of structural members or formed plate welded to form a rigid one-piece frame. The frame shall be of the flange back design, suitable for mounting on a concrete wall (CW). The guide slot shall be made of UHMWPE (ultra-high molecular weight polyethylene).

D. SLIDE. The slide shall consist of a flat plate reinforced with formed plates or structural members to limit its deflection to 1/720 of the gate's span under the design head.

E. GUIDES AND SEALS. The guides shall be made of UHMWPE (ultra-high molecular weight polyethylene) and shall be of such length as to retain and support at least two thirds (2/3) of the vertical height of the slide in the fully open position. The bottom and side seals shall be made of UHMWPE (ultra-high molecular weight polyethylene) of the self-adjusting type. A continuous compression cord shall ensure contact between the UHMWPE guide and the gate in all positions. The sealing system shall maintain efficient sealing in any position of the slide and let the water flow only in the open part of the gate. Seals shall maintain the specified leakage rate in both seating and unseating conditions.

F. LEAKAGE. Weir gates shall be substantially watertight under the design head conditions. Leakage shall not exceed 0.05 U.S. gallon per minute per foot (0.60 l/min per meter) of seal periphery under the design seating head and 0.1 U.S. gallon per minute per foot (1.25 l/min per meter) of seal periphery for the design unseating head.

G. DESIGN HEAD. Weir gates shall be designed to withstand the design head (maximum design head shall be taken as the height of the slide unless otherwise shown in the Contract Documents).

H. MATERIALS

1. Frame, yoke, stem guides, slide, stem extension - Stainless steel ASTM A240 type 304L or 316L
2. Guides, side and bottom seals, stem guide liner - Ultra high molecular weight polyethylene ASTM D4020
3. Compression cord - Nitrile ASTM D2000 M6BG 708, A14, B14, E014, E034
4. Threaded stem - Stainless steel ASTM A276 type 303 MX or 316
5. Fasteners - ASTM F593 and F594 GR1 for type 304 and GR2 for type 316
6. Pedestal, handwheel and crank - Tenzaloy aluminum
7. Gasket (between frame and wall) - EPDM ASTM 1056
8. Stem cover - Polycarbonate ASTM D3935
9. Lift nut, couplings - Manganese bronze ASTM B584 UNS-C86500

PART 3 – EXECUTION

3.01 GENERAL

A. Gate valves shall be installed in accordance with these Specifications.

3.02 QUALITY ASSURANCE

A. The manufacturer shall have experience in the production of substantially similar equipment, and shall show evidence of satisfactory operation in at least 50 installations. The manufacturer's shop welds, welding procedures and welders shall be qualified and certified in accordance with the requirement of the latest edition of ASME, Section IX.

B. The fully assembled gates shall be shop inspected, tested for operation and leakage, and adjusted before shipping. There shall be no assembling or adjusting required on the job site other than for the lifting mechanism.

C. The manufacturer shall be ISO 9001: 2000 certified.

D. SEAL PERFORMANCE TEST. The gate's sealing system should have been tested through a cycle test in an abrasive environment and should show that the leakage requirements are still obtained after 25,000 cycles with a minimum deterioration.

E. Gates and appurtenances shall be handled and installed in accordance with the manufacturer’s recommendations.

F. Following the completion of each gate installation, the gates shall be operated through at least two complete open/close cycles.

G. Gates should be checked for leakage by the contractor per the Manufacturer’s recommendations and the requirements of these Specifications.

END OF SECTION

SECTION 40 0531 – PLASTIC PROCESS PIPING

PART 1 - GENERAL

1.01 REQUIREMENT

A. Polyvinyl chloride pressure pipe for water distribution, in nominal diameters 1 inches through 4 inches.

B. Polyvinyl chloride sewer pipe for gravity sewers in nominal diameters 4 inches through 12 inches.

C. Polyvinyl chloride pressure pipe for gravity sewers and force mains in nominal diameters 3 inches through 12 inches.

1.02 REFERENCES

A. Commercial Standards:

ANSI A21.16	Protective Fusion Bonded Epoxy Coating for the Interior and Exterior
(AWWA C116)	Surfaces of Ductile Iron and Grey Iron Fittings for Water Supply Service.
ASTM D1248	Polyethylene Plastics Molding and Extrusion Materials.
ASTM D1784	Rigid Poly (Vinyl Chloride) (PVC) Compounds and Chlorinated Poly (Vinyl Chloride) (CPVC) Compounds.
ASTM D2241	Poly (Vinyl Chloride) (PVC) Pressure-Rated Pipe (SDR Series).
ASTM D2321	Underground Installation of Thermoplastic Pipe for Sewers and Other Gravity-Flow Applications.
ASTM D2444	Determination of the Impact Resistance of Thermoplastic Pipe and Fittings by Means of a Tup (Falling Weight).
ASTM D2680	Acrylonitrile-Butadiene-Styrene (ABS) and Poly (Vinyl Chloride) (PVC) Composite Sewer Piping.
ASTM D3034	Type PSM Poly (Vinyl Chloride) (PVC) Sewer Pipe and Fittings.
ASTM D3139	Joints for Plastic Pressure Pipes Using Flexible Elastomeric Seals.
ASTM D3212	Joints for Drain and Sewer Plastic Pipes Using Flexible Elastomeric Seals.
ASTM F477	Elastomeric Seals (Gaskets) for Joining Plastic Pipe.
ASTM F679	Poly (Vinyl Chloride) (PVC) Large-Diameter Plastic Gravity Sewer Pipe and Fittings.
ASTM F794	Poly (Vinyl Chloride) (PVC) Profile Gravity Sewer Pipe and Fittings Based on Controlled Inside Diameter.
ASTM F949	Poly (Vinyl Chloride) (PVC) Corrugated Sewer Pipe with Smooth Interior and Fittings.
PPI TR3	Policies and Procedures for Developing Recommended Hydrostatic Design Stresses for Thermoplastic Pipe Materials.
UNI-B-13	Recommended Standard Performance Specification for Joint Restraint Devices for Use with Polyvinyl Chloride Pipe.

1.03 SUBMITTALS

A. Submittals shall be made in accordance with Section 01 3300 – Submittals.

B. Submit shop drawings showing design of new pipe and fittings indicating alignment and grade, laying dimensions, fabrication, fittings, flanges, and special details.

1.04 QUALITY CONTROL

A. Submit manufacturer's certifications that PVC pipe and fittings meet requirements of this Section and AWWA C900, AWWA C909, and AWWA C905 for pressure pipe applications, or appropriate ASTM standard specified for gravity sewer pipe.

B. Submit manufacturer's certification that PVC pressure pipe for water lines and force mains has been hydrostatically tested at factory in accordance with AWWA C900, AWWA C909 and AWWA C905, and this Section.

C. When foreign manufactured material is proposed for use, have material tested for conformance to applicable ASTM requirements by certified independent testing laboratory located in United States. Certification from another source is not acceptable. Furnish copies of test reports to ENGINEER for review. Cost of testing paid by CONTRACTOR.

PART 2 – PRODUCTS

2.01 MATERIAL

A. Use PVC compounds in manufacture of pipe that contain no ingredient in amount that has been demonstrated to migrate into water in quantities considered to be toxic.

B. Furnish PVC pressure pipe manufactured from Class 12454-A or Class 12454-B virgin PVC compounds as defined in ASTM D1784. Use compounds pre-qualified for a 4,000 psi hydrostatic design basis, and a maximum hydrostatic design stress of 2,000 psi for water at 73°F per requirements of PPI TR3. Provide pipe which is homogeneous throughout, free of voids, cracks, inclusions, and other defects, uniform as commercially practical in color, density, and other physical properties. Deliver pipe with surfaces free from nicks and scratches with joining surfaces of spigots and joints free from gouges and imperfections which could cause leakage.

C. PVC Restrained Pipe: Must be listed on Owner's current Product Approval List.
   1. Pipe Material:
      a. DR 18: For restrained joints where shown on Drawings
      b. DR 14: For alternate to offset pipe section shown on Drawings. Do not use PVC for offset section with depth of cover greater than 20 feet or less than 4 feet. Do not use PVC in potentially petroleum contaminated areas.

D. Water Service:
   1. Bear National Sanitation Foundation Seal of Approval (NSF-PW) and meet the requirements of AWWA C900.

E. Gaskets:
   1. Gaskets shall meet requirements of ASTM F477. Use elastomeric factory-installed gaskets to make joints flexible and watertight.
   2. Flat Face Mating Flange: Full faces 1/8-inch-thick ethylene propylene (EPR) rubber.
   3. Raised Face Mating Flange: Flat ring 1/8-inch ethylene propylene (EDR) rubber, with filler gasket between OD of raised face and flange OD to protect flange from bolting moment.

F. Lubricant for rubber-gasketed joints: Water soluble, non-toxic, non-objectionable in taste and odor imparted to fluid, non-supporting of bacteria growth, having no deteriorating effect on PVC or rubber gaskets.

G. Do not use PVC in potentially or known contaminated areas.

H. Do not use PVC in areas exposed to direct sunlight.

2.02 WATER SERVICE PIPE

A. Pipe 3-inch or smaller: see Section 40 0513.73 – Plastic Process Piping.

B. Pipe 4-inch through 12-inch: AWWA C900, AWWA C909, Class 150, DR 18; AWWA C900, Class 200, DR 14 as alternate to offset pipe sections; nominal 20-foot lengths; cast-iron equivalent outside diameters.

C. Make curves and bends by deflecting joints. Do not exceed maximum deflection recommended by pipe manufacturer. Submit details of other methods of providing curves and bends for review by ENGINEER.

D. Hydrostatic Test: AWWA C900, AWWA C905, AWWA C909, ANSI A21.10 (AWWA C110); at point of manufacture; submit manufacturer's written certification.

2.03 GRAVITY SEWER PIPE

A. PVC gravity sanitary sewer pipe and storm sewer pipe shall be in accordance with provisions in following table:

ASTM or AWWA DESIGNATION	SDR (Max.)/ STIFFNESS (MIN.)	DIAMETER SIZE RANGE
D3034	SDR 35 / PS 46	4" to 15"
D3034	SDR 26 / PS 115	4" to 15"
F679	PS46	18” to 48”
F679	PS 115	18" to 48"
C900	DR 18 / N/A	4" to 12"
C909	DR 18 / N/A	4" to 12"
C905	DR 18 / N/A	14" to 30"
F949	N/A / 46 psi	12" to 36"
F949	N/A / 115 psi	8" to 10"
F794	N/A / 46 psi	8" to 30"
F794	N/A / 46 psi	24" to 36"

B. For sewers up to 12-inch diameter crossing over water lines, or crossing under water lines with less than 2 feet of separation, provide minimum 150 psi pressure-rated pipe conforming to ASTM D2241 with suitable PVC adapter couplings. Pipes shall be encased per MAG Standard Detail 404.

C. Joints: Spigot and integral wall section bell with solid cross section elastomeric or rubber ring gasket conforming to requirements of ASTM D3212 and ASTM F477, or ASTM D3139 and ASTM F477. Gaskets shall be factory-assembled and securely bonded in place to prevent displacement. Manufacturer shall test sample from each batch conforming to requirements ASTM D2444.

D. Fittings: Provide PVC gravity sewer sanitary bends, tee, or wye fittings for new sanitary sewer construction. PVC pipe fittings shall be full-bodied, either injection molded or factory fabricated. Saddle-type tee or wye fittings are not acceptable.

E. Conditioning: Conditioning of samples prior to and during tests is subject to approval by ENGINEER. When referee tests are required, condition specimens in accordance with Procedure A in ASTM D618 at 73.4°F plus or minus 3.6°F and 50 percent relative humidity plus or minus 5 percent relative humidity for not less than 40 hours prior to test. Conduct tests under same conditions of temperature and humidity unless otherwise specified.

2.04 SANITARY SEWER FORCE MAIN PIPE

A. Provide approved PVC pressure pipe conforming to requirements for water service pipe.

B. Acceptable pipe joints are integral bell-and-spigot, containing a bonded-in elastomeric sealing ring meeting requirements of ASTM F477. In designated areas requiring restrained joint pipe and fittings, use approved joint restraint device conforming to UNI-B-13, for PVC pipe 12-inch diameter and less.

C. Fittings: Provide approved ductile iron fittings as per these Specifications, except furnish fittings with one of following approved internal linings:
   1. Nominal 40 mils (35 mils minimum) virgin polyethylene complying with ASTM D1248, heat fused to interior surface of fitting
   2. Nominal 40 mils (35 mils minimum) polyurethane
   3. Nominal 40 mils (35 mils minimum) ceramic epoxy
   4. Nominal 40 mils (35 mils minimum) fusion bonded epoxy

D. Exterior Protection: Provide polyethylene wrapping of ductile-iron fittings.

E. Hydrostatic Tests: Hydrostatically test pressure rated pipe in accordance with Paragraph 2.02D.

2.05 BENDS AND FITTINGS FOR PVC PRESSURE PIPE

A. Bends and Fittings: ANSI A21.10 or ANSI A21.53, ductile iron; ANSI A21.11 single rubber gasket push-on type joint; minimum 150 psi pressure rating. Approved restrained joints, 250 psi, may be provided for up to 12 inches in diameter (water or sanitary).

B. Provide approved restrained joint fittings: Integral restrained joint fittings and pipe do not require secondary restraint.

PART 3 – EXECUTION

3.01 PROTECTION

A. Store pipe under cover out of direct sunlight and protect from excessive heat or harmful chemicals in accordance with manufacturer's recommendations.

3.02 INSTALLATION

A. Install PVC pipe in accordance with these Specifications, ASTM D2321 for Sewer Pipe, and manufacturer's recommendations.

B. Install PVC water service pipe to clear utility lines and have minimum depth of cover below property line grade of street, unless otherwise required by Drawings:
   1. Water service pipe 12 inches in diameter and smaller: 3 feet of cover.

C. Avoid imposing strains that will overstress or buckle pipe when lowering pipe into trench.

D. Hand shovel pipe bedding under pipe haunches and along sides of pipe barrel and compact to eliminate voids and ensure side support.

E. Store PVC pipe under cover out of direct sunlight. Protect pipe from excessive heat or harmful chemicals. Prevent damage by crushing or piercing.

F. Allow PVC pipe to cool to ground temperature before backfilling when assembled out of trench to prevent pullout due to thermal contraction.

3.03 PVC RESTRAINED MECHANISM

A. Do not apply lubricant to spline or pipe or coupling spline grooves.

B. Do not use excessive force while inserting the spline through coupling.

C. Insert spline until it is fully seated around circumference of pipe.

D. Field Cutting of Pipe Ends:
   1. Perform by workers certified by manufacturer.
   2. Use a PVC pipe cutter and provide square ends.
   3. Use manufacturer approved power routing and grooving tool to field fabricate required pipe groove.

END OF SECTION

SECTION 40 0533 – HIGH DENSITY POLYETHYLENE (HDPE) SOLID WALL PIPE

PART 1 – GENERAL

1.01 THE REQUIREMENT

A. Furnish and install high density polyethylene (HDPE) pipe and fittings in accordance with the Contract Documents.

1.02 SUBMITTALS

A. Submittals shall be furnished in accordance with Section 01 3300 – Submittal Procedures.

1.03 QUALITY ASSURANCE

A. HDPE pipe and fittings shall be of the N-12 low head pipe type.

B. This section contains references to some or all of the following documents, most recent edition. They are a part of this section as specified and modified. In case of conflict between the requirements of this section and those of the listed documents, the requirements of this section shall prevail.

Reference	Title
AASHTO M252 & M294	Standard Specification for Corrugated Polyethylene Pipe
ASTM D2321	Standard Practice for Underground Installation of Thermoplastic Pipe for Sewers and Other Gravity-Flow Applications
ASTM D3212	Standard Specification for Joints for Drain and Sewer Plastic Pipes using Flexible Elastomeric Seals
ASTM D3350	Standard Specification for Polyethylene Plastics Pipe and Fittings Materials
ASTM F2306	Standard Specification for 12” to 60” Annular Corrugated Profile-Wall Polyethylene Pipe and Fittings for Gravity-Flow Storm Sewer and Subsurface Drainage Applications
ASTM F2487	Standard Practice for Infiltration and Exfiltration Acceptance Testing of Installed Corrugated High Density Polyethylene Pipe
ASTM F477	Standard Specification for Elastomeric Seals (Gaskets) for Joining Plastic Pipe

PART 2– PRODUCTS

2.01 HDPE PIPE

A. Pipe Requirements: Low Head pipe shall have a smooth interior and annular exterior corrugations.
   1. 12”-diameter pipe shall meet AASHTO M294, Type S or ASTM F2306 with the modifications listed herein.
   2. Manning’s *n* value for use in design shall be 0.012.
   3. Where low head applications sustain continuous pressure, the sustained pressure shall not exceed 5 psi and the surge pressure shall not exceed 10 psi.

B. Joint Performance:
   1. The 12” pipe shall be watertight according to the requirements of ASTM D3212. Spigots shall have two gaskets meeting the requirements of ASTM F477. Gaskets

shall be installed by the pipe manufacturer and covered with a removable wrap to ensure the gasket is free from debris. A joint lubricant available from the manufacturer shall be used on the gasket and bell during assembly.

2. 12” diameters shall have a reinforced bell with a polymer composite band. The bell tolerance device shall be installed by the manufacturer.

C. Fittings: Fittings shall conform to AASHTO M252 and M294, or ASTM 2306. Bell and spigot connections shall utilize a spun on, welded, or integral bell and spigot with gaskets meeting ASTM F477. Fitting joints shall meet the watertight joint performance requirements of ASTM D3212.

D. Field Pipe and Joint Performance: To assure watertightness, field performance verification may be accomplished by testing in accordance with ASTM F2487. Appropriate safety precautions must be used when field-testing any pipe material. Contact the manufacturer for recommended leakage rates.

E. Material Properties: Virgin material for pipe and fitting production shall be high-density polyethylene conforming with the minimum requirements of cell classification 435400C for the corrugated exterior profile, and 4456A for the interior liner as defined and described in the latest version of ASTM D3350, except that carbon black content should not exceed 4%. The 12” virgin pipe material shall comply with the notched constant ligament-stress (NCLS) test as specified in Sections 9.5 and 5.1 of AASHTO M294 and ASTM F2306, respectively. The interior liner resin shall have a material designation code of PE3408/PE3608 by the Plastic Pipe Institute and a Hydrostatic Design Basis of 1600psi.

F. Pipe Dimensions

	Nominal Diameter
Pipe I.D. in (mm)	12 (300)
Pipe O.D. in (mm)	14.5 (368)
Inner Liner Thickness in (mm)	0.035 (0.9)
Min. Pipe Stiffness @ 5% Deflection #/in/in (kN/m^2)	50 (345)

PART 3– EXECUTION

3.01 INSTALLATION

A. General: In accordance with the manufacturer’s recommendations.

B. Installation shall also be in accordance with ASTM D2321, with the exceptions that minimum cover for 12” diameter pipes shall be three feet in single run applications. Backfill for minimum cover situations shall consist of Class 1 or Class 2 (minimum 90% SPD) material. Maximum fill heights depend on embedment material and compactions level.

3.02 TESTING

A. Testing shall be in accordance with ASTM F2487.

END OF SECTION

SECTION 40 0551 – COMMON WORK RESULTS FOR PROCESS VALVES

PART 1 - GENERAL

1.01 THE REQUIREMENT

A. Furnish and install all valves, actuators, and appurtenances, complete and operable, in accordance with the Contract Documents. These specifications shall not apply to valves, actuators, and appurtenances to be provided by process equipment vendors as part of process systems or equipment already approved by the ENGINEER.

B. The provisions of this Section shall apply to all valves and valve actuators except where otherwise indicated. Valves and actuators in particular locations may require a combination of units, sensors, limit switches, and controls indicated in other Sections of the Specifications.

C. American Iron and Steel (AIS) requirement applies to this Section. All iron and steel products used in this project must be produced in the United States.

D. Where a valve is to be supported by means other than the piping to which it is attached, the CONTRACTOR shall obtain from the valve manufacturer a design for support and foundation that satisfies the criteria in the applicable Sections of Division 46 – Water and Wastewater Equipment. The design, including drawings and calculations sealed by an engineer, shall be submitted with the Shop Drawings. When the design is approved, the support shall be provided.

E. Unit Responsibility: A single manufacturer shall be made responsible for coordination of design, assembly, testing, and furnishing of each valve; however, the CONTRACTOR shall be responsible for compliance with the requirements of each valve section. Unless indicated otherwise, the responsible manufacturer shall be the manufacturer of the valve.

F. Single Manufacturer: Where two or more valves of the same type and size are required, the valves shall be furnished by the same manufacturer.

1.02 SUBMITTALS

A. General: Submittals shall be furnished in accordance with Section 01 3300 – Submittal Procedures.

B. Shop Drawings: Shop Drawings shall contain the following information:
   1. Valve name, size, Cv factor, pressure rating and identification number (if any).
   2. Complete information on valve actuator, including size, Manufacturer, model number, limit switches, and mounting.
   3. Cavitation limits for all control valves.
   4. Assembly drawings showing part nomenclature, materials, dimensions, weights, and relationships of valve handles, handwheels, position indicators, limit switches, integral control systems, needle valves, and control systems.

C. Technical Manual: The Technical Manual shall contain the required information for each valve.

D. Spare Parts List: A Spare Parts List shall contain the required information for each valve assembly, where indicated.

1.03 QUALITY ASSURANCE

A. Valve manufacturer and model shall be as described in the Drawings or ENGINEER-approved equal.

1.04 SPARE PARTS

A. The CONTRACTOR shall furnish the required spare parts suitably packaged and labeled with the valve name, location, and identification number. The CONTRACTOR shall also furnish the name, address, and telephone number of the nearest distributor for the spare parts of each valve. Spare parts are intended for use by the OWNER after expiration of the correction of defects period.

PART 2 - PRODUCTS

2.01 PRODUCTS

A. General: Valves and gates shall be new and of current manufacture. Shut-off valves 6 inches and larger shall have actuators with position indicators. Buried valves shall be provided with valve boxes and covers containing position indicators and valve extensions. Manual shut-off valves mounted higher than 7 feet above working level shall be provided with chain actuators. Valves with no clear way to determine position shall be provided with position indicators. Stem extensions shall be provided on valves where operation of the valve cannot be easily accomplished from ground level.

B. Valve Actuators: Unless otherwise indicated, valve actuators shall be in accordance with these Specifications.

C. Valve Labeling: A label shall be provided on all shut-off valves and control valves except for hose bibs. The label shall be of 1/16-inch plastic or steel, minimum 2 inches by 4 inches in size and shall by permanently attached to the valve or on the wall adjacent to the valve as directed by the ENGINEER.

D. Valve Testing: As a minimum, unless otherwise indicated or recommended by the ENGINEER, valves 3 inches in diameter and smaller shall be tested in accordance with manufacturer's standard and 4 inches in diameter and larger shall be factory tested as follows:

1. Hydrostatic Testing: Valve bodies shall be subjected to internal hydrostatic pressure equivalent to twice the water rated pressure of the valve. Metallic valves rating pressures shall be at 100°F and plastic valves shall be 73°F, or at higher temperature according to type of material. During the hydrostatic test, there shall be no leakage through the valve body, end joints, or shaft seals, nor shall any part of the valve be permanently deformed. The duration shall be sufficient time to allow visual examination for leakage. Test duration shall be at least 10 minutes.
2. Seat Testing: Valves shall be tested for leaks in the closed position with the pressure differential across the seat equal to the water rated pressure of the valve. The duration of test shall be sufficient time to allow visual examination for leakage. Test duration shall be at least 10 minutes. Leakage past the closed valve shall not exceed 1 fluid ounce per hour per inch diameter for metal seated valves and drop-tight for resilient seated valves.
3. Performance Testing: All valves shall be shop operated from fully closed to fully open position and reverse under no-flow conditions in order to demonstrate the valve assembly operates properly.

E. Valve Marking: Valve bodies shall be permanently marked in accordance with MSS SP25 - Standard Marking Systems for Valves, Fittings, Flanges, and Unions.

2.02 MATERIALS

A. General: Materials shall be suitable for the intended application. Materials not indicated shall be high-grade standard commercial quality, free from defects and imperfections that might affect the serviceability of the product for the purpose for which it is intended. Unless otherwise indicated, valve and actuator bodies shall conform to the following requirements:

1. Cast Iron: Close-grained gray cast iron, conforming to ASTM A48 - Gray Iron Castings, Class 30, or to ASTM A126 - Gray Iron Castings for Valves, Flanges and Pipe Fittings.
2. Ductile Iron: ASTM A536 - Ductile Iron Castings, or to ASTM A395 - Ferritic Ductile Iron Pressure-Retaining Castings for Use at Elevated Temperatures.
3. Steel: ASTM A216 - Steel Castings, Carbon Suitable for Fusion Welding for High-Temperature Service, or to ASTM A515 - Pressure Vessel Plates, Carbon Steel, for Intermediate- and Higher-Temperature Service.
4. Bronze: ASTM B62 - Composition Bronze or Ounce Metal Castings, and valve stems not subject to dezincification shall conform to ASTM B584 - Copper Alloy Sand Castings for General Applications.
5. Stainless Steel: Stainless steel valve and operator bodies and trim shall conform to ASTM A351 - Steel Castings, Austenitic, for High-Temperature Service, Grade CF8M, or shall be Type 304 or 316 stainless steel.
6. PVC: Poly Vinyl Chloride materials for valve body, flanges, and cover shall conform to Cell Classification 12454.
7. CPVC: Chlorinated Poly Vinyl Chloride materials for valve body, flanges, and cover shall conform to Cell Classification 23447.
8. NSF Standard 14 and 61: All materials shall be listed for use in contact with potable water, where applicable.

B. Bodies: Valve bodies shall be cast, molded (in the case of plastic valves), forged, or welded of the materials indicated, with smooth interior passages. Wall thicknesses shall be uniform in agreement with the applicable standards for each type of valve, without casting defects, pinholes, or other defects that could weaken the body. Welds on welded bodies shall be done by certified welders and shall be ground smooth. Valve ends shall be as indicated, and be rated for the maximum temperature and pressure to which the valve will be subjected.

C. Bonnets: Valve bonnets shall be clamped, screwed, or flanged to the body and shall be of the same material, temperature, and pressure rating as the body. The bonnets shall have provision for the stem seal with the necessary glands, packing nuts, or yokes. Below grade valves with above grade worm gear drives/handwheels or electric actuators shall include extended bonnets for mating up to the worm gear drives/handwheel or electric actuators.

D. Stems: Valve stems shall be of the materials indicated, or, if not indicated, of the best commercial material for the specific service, with variable stem packing, O-rings, Chevron V-type packing, or other suitable seal. Where subject to dezincification, bronze valve stems shall conform to ASTM B62, containing not more than 5 percent of zinc or more than 2 percent of aluminum, with a minimum tensile strength of 30,000 psi, a minimum yield strength of 14,000 psi, and an elongation of at least 10 percent in 2 inches. Where dezincification is not a problem, bronze conforming to ASTM B584 may be used, except that zinc content shall not exceed 16 percent.

E. Stem Guides: Stem guides shall be provided, spaced 10-feet on centers unless the manufacturer can demonstrate by calculation that a different spacing is acceptable. Submerged stem guides shall be 304 stainless steel.

F. Internal Parts: Internal parts and valve trim shall be as indicated for each individual valve. Where not indicated, valve trim shall be of Type 316 stainless steel or other best suited material.

G. Nuts and Bolts: Nuts and bolts on valve flanges and supports shall be in accordance with these Specifications.

H. Coatings: Valve coatings shall be in accordance with these Specifications, or as recommended by the valve manufacturer.

I. Environment: Submerged valves shall be of stainless-steel construction as recommended by the valve manufacturer or as approved by the ENGINEER.

2.03 VALVE ACCESSORIES

Valves shall be furnished complete with the accessories required to provide a functional system.

PART 3 - EXECUTION

3.01 VALVE INSTALLATION

A. General: Valves, actuating units, stem extensions, valve boxes, and accessories shall be installed in accordance with the Manufacturer's written instructions and as indicated. Gates shall be adequately braced to prevent warpage and bending under the intended use. Valves shall be firmly supported to avoid undue stresses on the pipe.

B. Access: Valves shall be installed with easy access for actuation, removal, and maintenance and to avoid interference between valve actuators and structural members, handrails, or other equipment.

C. Valve Accessories: Where combinations of valves, sensors, switches, and controls are indicated, the CONTRACTOR shall properly assemble and install such items so that systems are compatible and operating properly. The relationship between interrelated items shall be clearly noted on Shop Drawing submittals.

END OF SECTION

SECTION 40 0557 – ACTUATORS FOR PROCESS VALVES AND GATES

PART 1 - GENERAL

1.01 THE REQUIREMENT

A. Provide all valve and gate actuators and appurtenances, complete and operable, in accordance with the Contract Documents.

B. The provisions of this Section shall apply to all valves and gates, except where otherwise indicated in the Contract Documents.

C. Single Manufacturer: Where two or more valve or gate actuators of the same type or size are required, the actuators shall all be produced by the same Manufacturer.

1.02 SUBMITTALS

A. General: Submittals shall be furnished in accordance with Section 01 3300 – Submittal Procedures and these Specifications. The shop drawing shall substantiate compliance with the Contract Documents requirements.

B. Shop Drawings: Shop Drawings of all actuators shall be submitted together with the valve and gate submittals as a complete package.

C. Operation & Maintenance Manuals: Operation and Maintenance Manual shall be furnished in accordance with these Specifications.

PART 2 - PRODUCTS

2.01 GENERAL

A. General: Unless otherwise indicated, all shut-off and throttling valves, and externally actuated valves and gates, shall be provided with manual or power actuators. All actuators shall be complete and operable with mounting hardware, motors, gears, controls, wiring, solenoids, hand wheels, levers, chains, and extensions, as applicable. All actuators shall be capable of holding the valve in any intermediate position between fully open and fully closed without creeping or fluttering.

B. Manufacturers: Where indicated, certain valves and gates may be provided with actuators manufactured by the valve or gate Manufacturer. Where actuators are furnished by different manufacturers, coordinate selection to have the fewest number of manufacturers possible.

C. Materials: All actuators shall be current models of the best commercial quality materials and liberally sized for the maximum expected torque. All materials shall be suitable for the environment in which the valve or gate is to be installed.

D. Mounting: All actuators shall be securely mounted by means of brackets or hardware specially designed and sized for this purpose and of ample strength. The word "open" shall be cast on each valve or actuator with an arrow indicating the direction to open in the counter-clockwise direction. All gear and power actuators shall be equipped with position indicators. Where possible, manual actuators shall be located between 48 and 60 inches above the floor or permanent working platform.

E. Standard: Unless otherwise indicated and where applicable, all actuators shall be in accordance with ANSI/AWWA C540 - AWWA Standard for Power-Actuating Devices for Valves and Sluice Gates.

F. Functionality: Electric, pneumatic, and hydraulic actuators shall be coordinated with the power requirements of these Specifications.

2.02 MANUAL ACTUATORS

A. General: Unless otherwise indicated, all valves and gates shall be furnished with manual actuators. Valves in sizes up to and including 8 inches shall have direct acting lever of the Manufacturer's best standard design. Larger valves and gates shall have gear-assisted manual handwheel actuators, with an operating pull of maximum 60 pounds on the rim of the handwheel. All buried and submerged gear-assisted valves, all gates, all gear-assisted valves for pressures higher than 250 psi, all valves 30 inches in diameter and larger, and where so indicated, shall have worm-gear actuators, hermetically-sealed and grease-packed, where buried or submerged. All other valves 10 inches to 24 inches in diameter may have traveling-nut actuators, worm-gear actuators, spur- or bevel-gear actuators, as appropriate for each valve.

B. Buried Valves: Unless otherwise indicated, all buried valves shall have extension stems (or bonnets where shown on the plans) to grade, with square nuts or floor stands, position indicators, and cast-iron or steel pipe extensions with valve boxes, covers and operating keys. Where so indicated, buried valves shall be in cast-iron, concrete, or similar valve boxes with covers of ample size to allow operation of the valve actuators. Covers of valve boxes shall be permanently labeled as requested by the OWNER, or the ENGINEER. Wrench-nuts shall comply with AWWA C500 - Metal Seated Gate Valves for Water Supply Service, and a minimum of 2 operating keys, or one key per 10 valves, whichever is greater, shall be furnished to the OWNER.

C. Buried and Submerged Actuators: Buried and submerged valve actuators and gear assemblies shall be provided with Type 304 and/or 316 stainless steel bolting and trim, and shall be rated for continuous submerged service. If buried, the valve actuator shall be suitable for a submerged service at a water depth of 10 feet (minimum). If submerged, the actuator shall be suitable for a submerged service at a water depth of 30 feet (minimum).

2.03 ELECTRIC ACTUATORS

A. General: The CONTRACTOR shall verify with the vendor/manufacturer that each electric actuator (supplied and installed) delivers the necessary torque requirements for opening and closing the corresponding valve that it is actuating, and provide supporting documentation to the ENGINEER. Electric actuators shall be suitable as specified on the plans for use on 115VAC, 1-phase, or 480 VAC, 3-phase, 60Hz power supply. The actuator shall include an internal high-torque reversible electric motor, terminal block, heat-treated alloy steel gearing, a minimum of two (2) 1/2" NPT conduit connections, reduction gearing, valve stem drive nut/bushing, position limit switches, mechanical overload torque switches, ductile iron gear case, automatic de-clutchable handwheel, and a two- (2-) year original manufacturer’s warranty. In order to maintain the integrity of the enclosure, setting of the torque levels, position limits and configuration of the indication contacts, etc. shall be carried out without the removal of any actuator covers over an Infrared interface. Sufficient commissioning tools shall be provided with the actuators and must meet the enclosure protection and certification levels of the actuators. Commissioning tools shall not form an integral part of the actuator and must be removable for secure storage/authorized release. In addition, provision shall be made for the protection of configured actuator settings by a means independent of access to the commissioning tool. The actuator shall include a device to ensure that the motor runs with the correct rotation for the required direction of valve travel irrespective of the connection sequence of the power supply.

B. Actuator Sizing: The actuator shall be sized to guarantee valve closure at the specified differential pressure and temperature. The safety margin of motor power available for seating and unseating the valve shall be sufficient to ensure torque switch trip at maximum valve torque with the supply voltage 10% below nominal. For linear operating valves, the operating speed shall be such as to give valve closing and opening at approximately 10-12 inches per minute unless otherwise noted. Actuator manufacturer/vendor shall confirm appropriate opening and closing times for the valve the actuator is operating.

C. Gears: Motor speed reduction shall be by means of a gear train consisting of hardened steel spur gears and self-locking worm and worm gear set. The worm shall be heat treated alloy steel and have worm thread surface rolled or ground. The worm gear shall be bronze. Non-metallic gears in the power train are not acceptable.

D. Environmental: Actuators shall be suitable for indoor and outdoor use. The actuator shall be capable of functioning in an ambient temperature ranging from -33°C (-27°F) to 70°C (158°F), up to 100% relative humidity. Actuators for hazardous area applications shall meet the area classification, gas group and surface temperature requirements specified in data sheet.

E. Rotating Components: All gearing and shafting shall be supported on anti-friction bearings. All thrust components shall be supported by use of tapered roller bearings.

F. Handwheel Drive: The actuator shall be furnished with a handwheel located in a 90-degree plane from the actuator output drive, with a maximum rim pull requirement of 60 pounds for valve travel loads. An external manual declutch lever shall be included to place actuator in the manual mode. The lever shall not require more than a 10-pound force to engage even when the valve has been tightly seated. The lever is to be padlockable in either handwheel or motor mode. Operation by motor shall not cause the handwheel to rotate, or operation of the handwheel shall not cause the motor to rotate. Handwheel shall operate in the clockwise direction to close.

G. Lubrication: All gearing and bearings shall be grease lubricated and suitable for year-round service based on prevailing ambient temperature conditions.

H. Electric Motors: The motor shall an integral part of the actuator, designed specifically for valve actuator applications. It shall be a low inertia high torque design, class F insulated with a class B temperature rise giving a time rating of 15 minutes at 40°C (104°F) at an average load of at least 33% of maximum valve torque. Temperature shall be limited by thermostats embedded in the motor end windings and integrated into its control. Electrical and mechanical disconnection of the motor should be possible without draining the lubricant from the actuator gear case.

I. Motor Protection: Protection shall be provided for the motor as follows:
   1. Stall - the motor shall be de-energized within 8 seconds in the event of a stall when attempting to unseat a jammed valve.
   2. Over temperature - thermostat will cause tripping of the motor. Auto-reset on cooling
   3. Single phasing - lost phase protection.
   4. Direction – phase rotation correction.

J. Limit Switches: Limit switches shall be geared to the drive mechanism and in step with actual valve position at all times, whether operation is by power or manual mode. Switches shall be activated by a rotor type design. Contacts shall be silver and have a rating of 10 amps at 120/230 VAC, a minimum of (3) N.O. and (3) N.C. contacts shall be provided for each direction of travel. Should auxiliary limit switch contacts for intermediate switch positions be required, please specify here. The limit switch gear mechanism shall be enclosed to prevent entrance of foreign matter or wire entanglement. Use of cams or screws to set switches or designs requiring battery back-up methods to ensure position

control in the event of a power failure, are unacceptable. Torque and turns limitation to be adjustable as follows:

1. Position setting range – multi-turn: 2.5 to 100,000 turns, with resolution to 15 deg. of actuator output.
2. Position setting range – direct drive part turn actuators: 90° +/-10°, with resolution to 0.1 deg. of actuator output.
3. Torque setting: 40% to 100% rated torque.

K. Torque Switches: The actuator shall include a variable torque switch to interrupt the motor power circuit when an obstruction is encountered in either direction of travel or when torque seating of valves is required for tight shut off. The torque switch shall have a calibrated dial for adjustment and have means to ensure maximum actuator rating is not exceeded. Contacts shall have the same construction and rating as the limit switch. Mechanical torque springs for load control shall be field replaceable without need of actuator dismantling or removal of the worm assembly. Torque control designs which do not employ mechanical torque springs are unacceptable.

L. Position Indication: Local position indication for quarter turn valves shall be by an indicator dial located on the gear operator and graduated in 25-degree increments. For rising stem multi-turn actuators, a dial window indicator shall be located on the limit switch compartment cover and labeled 0 to 100% open and graduated in 1% increments. Four contacts shall be provided which can be selected to indicate any position of the valve. Provision shall be made for the selection of a normally closed or open contact form. Contacts shall maintain and update position indication during hand wheel operation when all external power to the actuator is isolated. The contacts shall be rated at 5A, 250V AC, 30V DC. As an alternative to providing valve position any of the four above contacts shall be selectable to signal one of the following:

1. Valve opening, closing, or moving
2. Thermostat tripped, lost phase
3. Motor tripped on torque in mid travel, motor stalled
4. Remote selected
5. Actuator being operated by hand wheel
6. Provision shall be made in the design for an additional 4 contacts having the same functionality. Provision shall be made in the design for the addition of a contactless transmitter to give a 4-20mA analogue signal corresponding to valve travel for remote indication when required. The transmitter will auto range to the set limits.

M. Integral Starter and Transformer: The reversing starter, control transformer and local controls shall be integral with the valve actuator suitably housed to prevent breathing and condensation. The starter shall be suitable for 1,200 starts per hour (minimum) and of rating appropriate to motor size. The controls supply transformer shall be fed from two of the incoming three phases and incorporate overload protection. It shall have the necessary tappings and be adequately rated to provide power for the following functions:

1. Energization of the contactor coils.
2. 24V DC output for remote controls.
3. Supply for all the internal electrical circuits.

2.04 ELECTRICAL CONTROLS

A. At a minimum, the actuator shall be furnished with power and control terminal strips, limit switches, torque switches, all housed in a control compartment. The rectangular enclosure shall have a bonded O-ring seal and a hinged cover. Cover bolting shall be captive stainless hex head screws.

B. Controls shall be an integrated modular package, completely wired and be easily removable or replaceable, as a complete package, by removal of four (4) captive screws.

Motor leads and power supply leads will be terminated to the terminal strips located on the modular control package. Power supply terminals (5 points minimum) and control supply terminal (48 points minimum) shall be physically isolated from each other to protect against transient voltages. The terminal strips shall be completely shrouded with a high impact resistant plastic to avoid accidental terminal contact by personnel. The module is to include a snubber circuit to provide control voltage protection for switches and electronic modules for voltage surges. All electrical components of the modular package, such as reversing contactor, transformer, etc., shall be unidirectional plug connected to provide easy removal and replacement without concerns for proper wiring connections. All optional control requirements such as modulating control, 2-wire control, interposing relays, etc. shall be plug-in printed circuit type boards having gold plated contact connectors. Unless otherwise specified, all PC boards must be temperature rated -40°C to +70°C. Ease of replacement or upgrading shall be of paramount consideration.

2.05 OPEN-CLOSE SERVICE CONTROLS

A. Reversing Contactor: Control voltage shall be 120 volts, 50 or 60 Hz. N.O. Seal-in contacts for momentary contact pushbutton control and N.C. contacts for electrical interlock shall be supplied. The following options are available with the integral reversing starter: Motor Overload Relays, Auxiliary Starter Contacts, Phase Sentry.

B. Control Power Transformer: The transformer assembly shall provide 120, 18 and 12 Vac. It shall be epoxy impregnated and encapsulated to prevent moisture incursion and shall be completely wired as an assembly and plug connected to the modular package.

C. Pushbuttons: Each actuator shall be supplied with open-stop-close pushbuttons furnished integrally mounted. Pushbuttons shall be double O-ring sealed and include a protective silicone boot. Seal material shall be resistant to ozone and ultraviolet light. When integrally mounted pushbuttons are specified, the design shall permit operation of the buttons when the electrical enclosure cover is open.

D. Indicating Lights: The actuator shall include two (2) long life high intensity LED type pilot lights to indicate open, closed, and intermediate valve position (both lights on). Red shall indicate valve open and green shall indicate valve closed. An additional LED pilot light shall be furnished to indicate power is on. A fourth optional LED pilot light is available to indicate torque switch trip.

E. Selector Switch: The actuator shall include a 3-position selector switch, for local (hand)-off-remote (auto) control. If specified, the switch shall be padlockable in any position. A tumbler keylock option may be specified.

2.06 ACTUATORS FOR MODULATION DUTY

A. The starter shall be suitable for 1,200 starts per hour.

B. Control Module: For modulating applications, the control module shall be of the electronic solid-state type to control the position of an AC valve operator motor. Provide input/output per Contract Documents, including but not limited to: 4-20 mA analog input position control from PLC; 4-20 mA analog output position indication to PLC; and digital outputs to PLC for motor running, ready mode, remote mode, over torque condition and trouble. Position control shall be within +/- 2 percent of signal position.

Input Signal: The control unit shall be suited to receive an input set-point from an external 4-20 mA DC source or 120 VAC OPEN and CLOSE digital commands to remotely operate the motor in the forward and reverse directions, whichever is required for modulating purposes.

C. The controller shall compare the input signal with the feedback signal to produce an error signal. The controller shall cause the motor to move the valve or gate in a direction so as to reduce the magnitude of the error signal. The controller positioning accuracy shall be plus or minus 1.0 percent of travel or better. Operating speeds, unless otherwise stated, shall be 90 degrees per minute for rotary operators. It shall be possible to adjust Dead Band (0-9.9% of travel) and a Motion Inhibit Timer (2-99 secs), and select action upon loss of signal.

2.07 MANUFACTURERS

A. Rotork - IQT, or ENGINEER-approved equal.

PART 3 - EXECUTION

3.01 SERVICES OF MANUFACTURER

A. Field Adjustments: Field representatives of manufacturers of valves or gates with pneumatic, hydraulic, or electric actuators shall adjust actuator controls and limit-switches in the field for the required function.

B. Performance Test Certificate: Each actuator must be performance tested and individual test certificates shall be supplied free-of-charge. The test equipment should simulate a typical valve load and the following parameters should be recorded:
   1. Current at maximum torque setting
   2. Torque at maximum torque setting. Torque curves for both open and close strokes for each MOV shall be provided.
   3. Flash Test Voltage
   4. Actuator Output Speed or Operating Time; in addition, the test certificate should record details of specification, such as closing direction, and wiring diagram code number.

3.02 INSTALLATION

A. All valve and gate actuators and accessories shall be installed in accordance with these Specifications. Actuators shall be located to be readily accessible for operation and maintenance, without obstructing walkways. Actuators shall not be mounted where shock or vibrations will impair their operation, nor shall the support systems be attached to handrails, process piping, or mechanical equipment.

B. Coordinate all installation with the valve supplier. The supplier shall be responsible for fabrication, coordination, and assembly for a complete operating system.

C. Inspection, Startup, and Field Adjustment: An authorized representative of the Manufacturer shall visit the site and witness the following:
   1. Installation of the equipment for not less than 1 day.
   2. Inspection, checking, and adjusting the equipment for not less than 1 day.
   3. Startup and field-testing for proper operation for not less than 1 day.

END OF SECTION

SECTION 40 0561 – GATE VALVES

PART 1 - GENERAL

1.01 THE REQUIREMENT

A. The CONTRACTOR shall provide gate valves and appurtenances, complete and operable, in accordance with these Specifications and the Contract Documents.

B. American Iron and Steel (AIS) requirement applies to this section. All iron and steel products used in this project must be produced in the United States.

1.02 SUBMITTALS

A. Furnish submittals in accordance with Section 01 3300 – Submittal Procedures.

PART 2 - PRODUCTS

2.01 GATE VALVES (16-inch and smaller)

A. General. Gate valves for water service shall conform to the AWWA Standard for "Resilient-Seated Gate Valves" (AWWA C509, latest edition). Valves shall be of the resilient seated type with non-rising stem, closing in a clockwise direction. Sealing mechanism shall provide zero leakage at the water working pressure against line flow from either direction. The rubber covered gate shall not be wedged into a pocket nor slide across the seating surface to obtain a tight closure. Synthetic thrust washers shall be provided to minimize operating torque. Valves shall be flanged or have ends to match pipe and shall have solid bronze internal working parts.

B. Stems. Gate valve stems shall be of bronze containing not more than 5 percent of zinc nor more than 2 percent of aluminum, and shall have a minimum tensile strength of 60,000 psi, a yield strength of 35,000 psi, and an elongation of at least ten percent in 2-inches, as determined by a test coupon poured from the same ladle from which the valve stems to be furnished are poured. Seats. Resilient valve seats shall consist of styrene butadiene (SBR) rubber permanently bonded to a high-strength iron wedge gate. The gate shall be totally encapsulated. The bonding process shall meet the requirements of ASTM D429. Mechanically attached seats or seats attached to the valve body shall not be accepted.

C. Operators. Buried valves shall be provided with a 2-inch square operating nut, extension stems, and valve well, as required in Part 2.01. Unless otherwise shown on the drawings, valves in vaults or above grade shall be supplied with a cast iron handwheel and be rising stem. All buried gate valves shall be non-rising stem.

D. Pressure Rating and Testing. Valves shall be rated for a working water pressure of 200 psi and shall be seat tested at this pressure with no leakage. Shell test of 400 psi shall be applied to body with valve in the open position with no leakage through the metal, flanged joints, or stem seals.

E. Epoxy Coating. Valve and operator shall be epoxy coated as specified in part 2.01 of this Section, except coating shall have 12 mil thickness.

F. Spare Parts. Each valve shall be supplied with a spare set of upper and lower O-rings and weather seal.

G. Manufacturer. Resilient seat gate valves shall be manufactured by U.S. Pipe, American Darling CRS-80, ITT Kennedy, or ENGINEER-approved equivalent.

EXECUTION

3.01 GENERAL

A. Gate valves shall be installed in accordance with the provisions of these Specifications. Care shall be taken that valves in plastic lines are well-supported at each end of the valve.

END OF SECTION

SECTION 40 0562 – PLUG VALVES

PART 1 – GENERAL

1.01 THE REQUIREMENT

A. Provide plug valves and appurtenances, complete and operable, in accordance with the Contract Documents.

1.02 SUBMITTALS

A. Furnish submittals in accordance with Section 01 3300 – Submittal Procedures.

1.03 OPERATION AND MAINTENANCE MANUAL

A. Provide six (6) hard copies plus one (1) electronic version in PDF format.

B. Operation and Maintenance Manual shall be furnished in accordance with these Specifications.

1.04 QUALITY ASSURANCE

A. The manufacturer shall provide a 2-year equipment warranty.

1.05 SPARE PARTS

A. Spares shall be as requested by the ENGINEER. Payment for spares shall be made in accordance with the General Conditions.

B. A list of spare parts for each piece of equipment shall be obtained from the manufacturer and submitted at the same time as Shop Drawings. The name, address, and telephone number of the nearest distributor for each piece of equipment shall be furnished.

PART 2 – PRODUCTS

2.01 ECCENTRIC PLUG VALVES

A. General: Plug valves shall be of the quarter-turn, non-lubricated, eccentric type with resilient faced plug. Plug valves shall be designed for a working pressure of 175 psi for valves 12” and smaller, 150 psi for valves 14” and larger. Valves shall provide tight shut-off at rated pressure. Valves 20” and smaller shall have round port design. 24” and larger valves shall have rectangular port design. Minimum port area for all valves shall be 80% of corresponding pipe area.

B. Valve Body: The plug valve body shall be cast iron ASTM A126 Class B with welded-in overlay of greater than 90% nickel alloy content on all surfaces contacting the face of the plug. Sprayed, plated, nickel welded rings or seats screwed into the body are not acceptable. All cover bolts shall be corrosion resistant. The “SEAT END” of the valve shall be designated on the valve body.

C. Coating: Plug valves shall be coated in accordance with Section 09 97 00 – Special Coating

D. Valve Plug: The valve plug shall be cast iron ASTM A126 Class B, with Buna-N resilient seating surface to mate with the body seat.

E. Valve Connections: Flanged valves shall be drilled in compliance with ANSI B16.1, Class 125. Mechanical joint valves shall comply with AWWA C111. Threaded valves shall have NPT full size inlets with hexagonal wrench connection.

F. Valve Bearings: Plug valves shall be furnished with permanently lubricated sleeve type bearings conforming to AWWA C504. Bearings shall be of sintered, oil impregnated type 316 stainless steel ASTM A743 Grade CF-8M or bronze ASTM B127.

G. Valve Shaft Seals: Valve shaft seals shall be of the “U” cup type, in accordance with AWWA C504. Seals shall be self-adjusting and repackable without removing the bonnet from the valve.

H. Valve Actuators: Valves 2.5” and smaller shall be provided with a hand lever. Valves 3” and larger shall be specified as equipped with either a handwheel or 2” square nut for direct quarter-turn operation.

1. Where specified, a totally enclosed and sealed worm gear actuator with position indicator and externally adjustable open and closed stops shall also be included. The worm segment gear shall be ASTM A536 Grade 65-45-12 ductile iron with precision bore and keyway for connection to the valve shaft. All buried valves shall be provided with worm and gear actuators suited for the intended service. All gear actuators shall be designed to withstand, without damage, a rim pull of 200 lbs for handwheels and an input torque of 300 ft-lbs for nuts.

2. Buried service actuators shall be packed with grease and sealed for temporary submergences to 20 feet of water. Exposed worm shafts shall be stainless steel.

I. Electric Actuators: When specified, electric actuators shall be in accordance with Section 40 05 57 – Actuators for Process Valves and Gates.

2.02 Manufacturers, or ENGINEER-approved equal:

A. VAL-MATIC

B. PRATT

C. DeZurik

D. ENGINEER-approved equal

PART 3 – EXECUTION

3.01 GENERAL

A. Valves shall be installed in accordance with these Specifications and Manufacturer’s instructions.

END OF SECTION

SECTION 40 0563 – BALL VALVES

PART 1 – GENERAL

1.01 THE REQUIREMENT

A. Provide ball valves and appurtenances, complete and operable, in accordance with the Contract Documents.

B. American Iron and Steel (AIS) requirement applies to this Section. All iron and steel products used in this project must be produced in the United States.

1.02 SUBMITTALS

A. Furnish submittals in accordance with Section 01 3300 – Submittal Procedures.

PART 2 – PRODUCTS

2.01 GENERAL

A. The ball valve type and its actuator shall be as indicated in the contract documents. All actuators shall be in accordance with these Specifications.

2.02 BALL VALVES (3- TO 12-INCH)

A. Construction: Ball valves shall be full bore with a design working pressure of 150 psig. Valve construction shall conform to the following:
   1. Top Flange shall be design for direct mounting of actuator and gear operators. Top flange shall provide easy access for adjustment of gland bolts. Design shall conform to EN ISO 5211.
   2. Valve Design shall conform to ASME B16.34-2004/ API 6D / BS EN ISO 17292 Class 150.
   3. Valve end-to-end dimensions shall be per ASME b16.10 / API 6D.
   4. Valve Body shall be flanged, two-piece design in cast construction and shall be coated with two-coat zinc-rich epoxy paint.
   5. Ball shall be floating design, stainless steel with superior finish and sphericity to ensure extended seat life and low operating torque.
   6. Stem shall be stainless steel, heavy duty construction with double “D” (sizes up to 4”) and round and keyed (sizes 6” and greater) configurations.
   7. Seat shall be contoured and be reinforced with PTFE seat.
   8. Body joint bolting shall conform to ASTM A193 B7/ ASTM A194 2H for carbon steel bodies and ASTM A193 GR.B8/ ASTM A194 GR.8 for stainless steel bodies.
   9. Actuators: Unless otherwise indicated, ball valves shall have manual hand lever or wheel actuators.

B. Manufacturers, or ENGINEER-approved equal:
   1. Apollo
   2. Nibco
   3. Valtorc

2.03 BALL VALVES (SMALLER THAN 3-INCH)

A. Construction: Ball valves, smaller than 3-inch, for general purpose use, shall be heavy-duty type for industrial service, with butt weld, grooved, threaded, or soldered ends to match the piping. The bodies shall be cast red bronze conforming to ASTM B584. The ball and threaded pack gland shall be brass with a reinforced PTFE seat ring. The stem shall be of silicon bronze. All valves shall have a pressure rating of minimum 125 psi steam, and 200 psi cold water, unless otherwise indicated.

B. Construction (Thermoplastic Ball Valves): PVC and CPVC ball valves, smaller than 3-inch, for general purpose use, shall be heavy-duty type for industrial service, with butt socket, threaded, or flanged ends to match the piping. The ball valves shall be true union type constructed from PVC Type I, ASTM D1784, or CPVC Type IV, ASTM D1784. All O-rings shall be EPDM or Viton. All ½" to 2" valves shall be pressure rated at 235 psi and all 2-1/2" to 3" valves shall be pressure rated at 150 psi, unless otherwise indicated.

C. Manufacturers, or ENGINEER-approved equal:
   1. Hayward
   2. Apollo
   3. Asahi
   4. Spears

2.04 CURB STOP BALL VALVES

A. Construction: Curb stop ball valves smaller than 3-inch shall be shall be heavy-duty type for industrial service, with butt socket, threaded, or flanged ends to match the piping. If Curb Stop ball valve is connecting to plastic piping, stainless steel insert stiffeners are required. Curb stop ball valve to be made of heavy cast bronze body, end piece to be epoxied into body. A fluorocarbon coated brass ball to eliminate corrosion and electrolysis associated with common plug type curb stops. Curb stops shall be 90-degree rotation for open/close, one-piece cap and stem, double Buna-N Stem O-rings to assure permanent water seal at top. Curb stop ball valves shall be designed and manufactured to conform to AWWA Standard C800-89 (ASTM B62-Index 115-85-5-5-5). Valves shall be individually inspected and tested by the manufacture for leaks by air pressure under water.

B. Manufactures, or ENGINEER-approved equal:
   1. Ford
   2. Mueller Company
   3. Legend

PART 3 – EXECUTION

3.01 GENERAL

A. Ball valves shall be installed in accordance with the provisions of these Specifications. Care shall be taken that valves in plastic lines are well supported at each end of the valve.

END OF SECTION

SECTION 40 0564 – BUTTERFLY VALVES

PART 1 - GENERAL

1.01 THE REQUIREMENT

A. Provide butterfly valves and appurtenances, (air and water service) complete and operable, in accordance with the Contract Documents.

B. American Iron and Steel (AIS) requirement applies to this Section. All iron and steel products used in this project must be produced in the United States.

1.02 SUBMITTALS

A. Furnish submittals in accordance with Section 01 3300 – Submittal Procedures.

B. Complete Shop Drawings

C. Drawings of butterfly valves and actuators.

D. Drawings showing valve port diameter complete with dimensions, part numbers and materials of construction.

1.03 QUALITY ASSURANCE

A. Valves shall be subjected to performance, leakage, and hydrostatic tests in accordance with procedures and acceptance criteria established by AWWA C504.

PART 2 - PRODUCTS

2.01 RESILIENT SEATED BUTTERFLY VALVES

A. General: Butterfly valves steady-state water working pressures and steady-state differential pressure shall be as indicated on the plans.

B. Valves shall be of the body type, pressure class, end joint, and actuator type indicated on Contract Drawings.

C. Construction: Unless otherwise indicated, all materials of construction shall be suitable for the service, whether water or air. The seats shall be positively clamped or bonded into the disc or body of the valve.

Description	Material Standards (may differ for service application – water/air)
Valve Bodies	Cast Iron ASTM A126 Class B
Valve Stem	Stainless Steel 416
Valve discs	Aluminum or Bronze
Painting and coating	Refer to applicable Sections of Division 09 – Finishes

D. Manufacturers, or ENGINEER-approved equal:
1. Val-Matic
2. Keystone
3. Pratt

2.02 BURIED SERVICE BUTTERFLY VALVE

A. General: All butterfly valves shall be manufactured in accordance with the latest revision of AWWA C504 for Class 150B service. Valves in sizes 3-24” shall have 304 stainless steel trim as standard.

B. Valve body shall be constructed of cast iron ASTM A126 Class B and conform to AWWA C504 in terms of laying lengths and minimum body shell thickness. End connections shall be as specified on the plans.

C. Valve disc shall also be made from cast iron ASTM A126 Class B in sizes 20" and smaller. Sizes 24" and larger shall be built from ductile iron in conformance to ASTM A536. Disc shall be furnished with Type 316 stainless steel seating edge to mate with the rubber seat on the body.

D. Valve seat shall be Buna-N rubber located on the valve body. In sizes 20" and smaller, valves shall have bonded seats that meet test procedures outlined in ASTM D429 Method B. Sizes 24" and larger shall be retained in the valve body by mechanical means without use of metal retainers or other devices located in the flow stream.

E. The shaft shall be Type 304 stainless steel conforming to ASTM A276. Shaft seals shall be standard self-adjusting split V packing. Shaft seals shall be of a design allowing replacement without removing the valve shaft.

F. Bearings shall be sleeve type that is corrosion resistant and self-lubricating.

G. Actuators shall be fully grease packed and have stops in the open/close position. The actuator shall have a mechanical stop which will withstand an input torque of 450 ft. lbs. against the stop. The traveling nut shall engage alignment grooves in the housing. The actuators shall have a built-in packing leak bypass to eliminate possible packing leakage into the actuator housing.

H. The Valve Interior and Exterior Surfaces except for seating shall be coated with Ameron Amerlock 370 in accordance with AWWA C550 and C504. All internal and/or external surfaces shall be covered with a polyamide cured epoxy coating applied over a sand blasted “new white metal surface" per SSPC-SP10 to a minimum of 6 mils in compliance with AWWA C550.

I. Manufacturers, or ENGINEER-approved equal:
   1. Val-Matic
   2. Pratt

PART 3 - EXECUTION

3.01 INSTALLATION

A. All exposed butterfly valves shall be installed with a means of removing the complete valve assembly without dismantling the valve or operator. The installation shall be in accordance with these Specifications.

END OF SECTION

SECTION 40 0565 – CHECK VALVES

PART 1 - GENERAL

1.01 THE REQUIREMENT

A. Provide check valves and appurtenances, complete and operable, in accordance with the Contract Documents.

B. American Iron and Steel (AIS) requirement applies to this Section. All iron and steel products used in this project must be produced in the United States.

1.02 SUBMITTALS

A. Furnish submittals in accordance with Section 01 3300 – Submittal Procedures.

PART 2 - PRODUCTS

2.01 SWING CHECK VALVES (3-INCH AND LARGER)

A. General: Swing check valves for water and wastewater service shall be a full body flange type, with a domed access cover and resilient disc. The valves shall meet ANSI/AWWA C 508 - Swing-Check Valves for Waterworks Service, 3 in. through 24 in. NPS, unless otherwise indicated, and shall be with full-opening passages and designed for a water-working pressure of 250 psi. Check valves shall be fully operational in both the vertical and horizontal installation position.

B. Body: The valve body and cover shall be of cast iron conforming to ASTM A536 Grade 65-45-12 with flow area equal to the nominal pipe inside diameter throughout the valve. Seat shall be constructed on a 45-degree angle to reduce disc travel. The seat and internal body shall be fully coated with a two part thermosetting epoxy suitable for use in both potable water and wastewater applications.

C. Disc: The resilient disc shall be of one-piece construction, precision molded with an integral O-ring type seal surface and contain alloy steel and nylon reinforcement in the flexible hinge area. For pressure application 50 psig or greater, the resilient disc shall be a fully encapsulated steel pressure plate with integral molded O-ring on the face of the elastomer. Nylon reinforcements shall be provided in the flexible hinge area of the disc assembly.

D. Backflow Actuator: Check valves shall be provided with a screw-type backflow actuator to allow for the opening of the valve during no flow conditions. The backflow shall be a rising-stem type to indicate position. A stainless-steel T-handle shall be provided for ease of operations.

E. Position Indicator: Check valves shall be provided with a mechanical position indicator to indicate disc position.

F. Disc Accelerator Mechanism: Check valve shall be provided with a disc accelerator mechanism to assist in the rapid closure of the disc to minimize flow reversal. Accelerator mechanism shall be required in high head application of 50 psig or greater. Accelerator mechanism shall be a spring type, weighted type, or hinge type.

G. Valve manufacturer shall be Val-Matic, VSI, Pratt or ENGINEER-approved equal.

2.02 SWING CHECK VALVES (2-1/2-INCH AND SMALLER)

A. General: Swing check valves for steam, water, oil, or gas in sizes 2-1/2-inch and smaller shall be suitable for a steam pressure of 150 psi and a cold water pressure of 300 psi. They shall have screwed ends, unless otherwise indicated, and screwed caps.

B. Body: The valve body and cap shall be of bronze conforming to ASTM B61 - Steam or Valve Bronze Castings, or ASTM B62 with threaded ends conforming to ANSI/ASME B1.20.1 - Pipe Threads, General Purpose (inch).

C. Disc: Valves for steam service shall have bronze or brass discs conforming to ASTM B16 – Free-Cutting Brass Rod, Bar, and Shapes for Use in Screw Machines, and for cold water, oil, and gas service replaceable composition discs.

D. Hinge Pin: The hinge pins shall be of bronze or stainless steel.

E. Position Indicator: Valves shall be provided with mechanical position (open/closed) indicators.

F. Valve manufacturer shall be as shown on the Drawings or ENGINEER-approved equal.

2.03 DOUBLE DISC CHECK VALVE

A. General: Check valve shall be of the double disc, wafer style with torsion spring induced closure. Valve shall be Wafer style for bolting between ANSI Class 125 flanges. Valves have a Ductile Iron body (ASTM A536 65-45-12) to fit inside 125# ANSI bolt circles, a two-piece Stainless-Steel disc (ASTM type 304), type 304 Stainless Steel dual shafts, ASTM A313, type 304 Stainless Steel torsion spring and have an integrally molded elastomer seat vulcanized to the body. Valve for horizontal flow shall be installed with the shafts in vertical position.

B. Valve manufacturer shall be Valmatic, Pratt or ENGINEER-approved equal.

2.04 GLOBE STYLE CHECK VALVE

A. General: Check valve shall be of the silent operating type and the same size as the entering pipe. Globe style thru 24 inches shall be rated 250PSI WOG, have a Ductile Iron body (ASTM A536 65-45-12), 125# ANSI Flat Face Flanges, ASTM A313 Type 304 Stainless Steel helical or conical spring, a Stainless Steel (ASTM type 304) seat and dual guided disc (top and bottom), 304 Stainless Steel guide bushing and type 304 Stainless Steel guide pins. Check valve to have a minimum open area in the body of 110% of the area of the entering or corresponding pipe. Valve is to operate silently in either vertical or horizontal positions, flow up or down.

B. Valve manufacturer shall be Valmatic, Pratt or ENGINEER-approved equal.

2.05 WAFER SILENT CHECK VALVE

A. General: Check valve shall be of the silent wafer type and the same size as the entering pipe. Valves shall be the compact wafer style and have a pressure and temperature rating equal to or greater than the pipeline in which they are installed. Compact wafer-silent style check valves thru 12 inches shall be rated for 250PSI WOG for installation between ANSI Class 125 or Class 250 flanges, have a Ductile Iron body (ASTM A536 65-45-12), ASTM A313, Type 304 Stainless Steel helical or conical spring, a Stainless-Steel guide bushing and type 304 Stainless Steel guide pins. Valves are to operate silently in either vertical or horizontal positions, flow up or down.

B. Valve manufacturer shall be Val-Matic, Pratt, or ENGINEER-approved equal.

2.06 TILTING DISC CHECK VALVE

A. General: The tilting disc check valve shall consist of a circular disc with conical rim, hinged about a fixed pivot above its center-line and offset from the plane of the seat, sealing against a body seat clamped between the two sections of the valve body.

B. Body: The body shall be two-piece, consisting of an entrance and a discharge section bolted together at an angle with the pipeline. An O-ring seal in a groove between the body flanges shall be in place to prevent leakage between the flanges when bolted together. The valve shall be complete with ANSI class flanges to mate with adjacent equipment.

C. Disc and Seat: A body seat shall be clamped in place in a slot between the two body sections. The body seat shall have a conical finish to mate with the disc seat. There shall be an inspection port provided in both the entrance and discharge sections to provide visual access both upstream and downstream of the disc. An indicator shall be provided to show disc position for the full range of travel. Bosses shall be cast in both the entrance and discharge sections to allow for a top mounted oil dashpot for controlled opening and closing. All valve castings shall be ductile iron ASTM A536 Grade 65-45-12. The disc and body seat ring shall be Bronze B62. The hinge-pin shall be stainless steel ASTM A276 Type 304. The bearing sleeve shall be Bronze B62. Coating shall be NSF61 approved epoxy.

D. Backflow Actuator: If required, check valves shall be provided with a screw-type backflow actuator to allow for the opening of the valve during no flow conditions. The backflow shall be a rising-stem type to indicate position. A stainless-steel T-handle shall be provided for ease of operations.

E. Position Indicator: Check valves shall be provided with a mechanical position indicator to indicate disc position.

F. Valve manufacturer shall be Val-Matic, Pratt or ENGINEER-approved equal.

2.07 RUBBER FLEX DUCKBILL CHECK VALVE

A. General: Check valves are to be metal backed, rubber flanged for attaching directly to flanged-end connections. The check valve shall be made of Buna-N elastomer material. CONTRACTOR to verify the valve ID size and flange drilling dimensions.

B. Valve manufacture shall be Cla-Val, or ENGINEER-approved equal.

PART 3 - EXECUTION

3.01 GENERAL

A. Valves shall be installed in accordance with provisions of these Specifications.

END OF SECTION

SECTION 40 0567 – SPECIALIZED PRESSURE AND FLOW-CONTROL VALVES

PART 1 - GENERAL

1.01 THE REQUIREMENT

A. Provide all miscellaneous valves and appurtenances, complete and operable, in accordance with the Contract Documents.

B. American Iron and Steel (AIS) requirement applies to this Section. All iron and steel products used in this project must be produced in the United States.

1.02 SUBMITTALS

A. Furnish submittals in accordance with Section 01 3300 – Submittal Procedures.

1.03 OPERATION AND MAINTENANCE MANUAL

A. Provide two (2) hard copies plus one (1) electronic version in PDF format.

B. Operation and Maintenance Manual shall be furnished in accordance with these Specifications.

1.04 QUALITY ASSURANCE

A. Manufacturer and model shall be described on the Drawings or ENGINEER-approved equal.

B. The manufacturer shall provide a 2-year equipment warranty.

1.05 SPARE PARTS

A. Spares shall be as requested by the ENGINEER. Payment for spares shall be made in accordance with these Specifications and the Contract Documents.

B. A list of spare parts for each piece of equipment shall be obtained from the manufacturer and submitted at the same time as Shop Drawings. The name, address, and telephone number of the nearest distributor for each piece of equipment shall be furnished.

PART 2 - PRODUCTS

2.01 AIR-VACUUM AND AIR-RELEASE VALVES

A. Air and Vacuum Valves: Air and vacuum valves shall be capable of venting large quantities of air while pipelines are being filled, and allowing air to re-enter while pipelines are being drained. They shall be of the size indicated, with flanged or screwed ends to match piping. Bodies shall be of high-strength cast iron. The float, seat, and all moving parts shall be constructed of Type 316 stainless steel. Seat washers and gaskets shall be of a material insuring water tightness with a minimum of maintenance. Valves shall be designed for minimum 150 psi water-working pressure, unless otherwise indicated.

B. Air-Release Valves: Air-release valves shall vent accumulating air while system is in service and under pressure and be of the size indicated and shall meet the same general requirements as indicated for air and vacuum valves except that the vacuum feature will not be required. Valves shall be designed for a minimum water-working pressure of 150 psi, unless otherwise indicated.

C. Combination Air Valves: Combination air valves shall combine the characteristics of air and vacuum valves and air release valves by exhausting accumulated air in systems under pressure and releasing or re-admitting large quantities of air while a system is being

filled or drained, respectively. Valves shall have the same general requirements as indicated for air and vacuum valves.

D. Valves shall be manufactured by ARI, or ENGINEER-approved equal, and designed for a minimum water-working pressure of 150 psi, unless otherwise indicated.

E. ARV valves shall be protected with a lockable cover. The cover shall be provided with air vents and a drain port. The cover shall be easily removed by the operator for maintenance purposes.

2.02 PRESSURE RELIEF/PRESSURE SUSTAINING VALVES

A. Quality Assurance: The valve manufacturer shall warrant the valve to be free of defects in material and workmanship for a period of three years from date of shipment, provided the valve is installed and used in accordance with all applicable instructions. Electrical components shall have a one year warranty. Valves shall be subjected to performance, leakage, and hydrostatic tests in accordance with procedures and acceptance criteria established by AWWA C504

B. General: The pressure relief/sustaining valve shall maintain a constant upstream and/or downstream pressure regardless of changing flow rate and/or inlet pressure.

C. Main Valve: The valve shall be hydraulically operated, single diaphragm-actuated, globe pattern. The valve shall consist of three major components: the body, cover, and diaphragm assembly. The diaphragm shall be the only moving part and shall form a sealed chamber in the upper portion of the valve, separating operating pressure from line pressure. Packing glands and/or stuffing boxes are not permitted and there shall be no pistons operating the main valve or pilot controls.

D. Body: Valve body shall be ductile iron construction. Valve body shall be cast as one piece. No fabrication or welding shall be used in manufacturing.

E. Disc: The valve shall contain a resilient, synthetic rubber disc, with a rectangular cross-section contained on three and one-half sides by a disc retainer and forming a tight seal against a single removable seat insert. No O-ring type discs (circular, square, or quad type) shall be permitted as the seating surface. The disc guide shall be of the contoured type to permit smooth transition of flow and shall hold the disc firmly in place. The disc retainer shall be of a sturdy one-piece design capable of withstanding opening and closing shocks. It must have straight edge sides and a radius at the top edge to prevent excessive diaphragm wear as the diaphragm flexes across this surface. No hourglass-shaped disc retainers shall be permitted and no V-type or slotted type disc guides shall be used.

F. Diaphragm: The diaphragm assembly containing a non-magnetic 303 stainless steel stem with sufficient diameter to withstand high hydraulic pressures shall be fully guided at both ends by a bearing in the valve cover and an integral bearing in the valve seat. No center guides shall be permitted. The stem shall be drilled and tapped in the cover end to receive and affix such accessories as may be deemed necessary. The diaphragm assembly shall be the only moving part and shall form a sealed chamber in the upper portion of the valve, separating operating pressure from line pressure.

G. The flexible, non-wicking, FDA approved diaphragm shall consist of nylon fabric bonded with synthetic rubber compatible with the operating fluid. The center hole for the main valve stem must be sealed by the vulcanized process or a rubber grommet sealing the center stem hole from the operating pressure. The diaphragm must withstand a Mullins Burst Test of a minimum of 600 psi per layer of nylon fabric and shall be cycle tested 100,000 times to insure longevity. The diaphragm shall not be used as the seating surface. The diaphragm shall be fully supported in the valve body and cover by machined surfaces

which support no less than one-half of the total surface area of the diaphragm in either the fully opened or fully closed position.

H. Seat & Stem: The main valve seat and the stem bearing in the valve cover shall be removable. The lower bearing of the valve stem shall be contained concentrically within the seat and shall be exposed to the flow on all sides to avoid deposits. To insure proper alignment of the valve stem, the valve body and cover shall be machined with a locating lip. No “pinned” covers to the valve body shall be permitted. Cover bearing, disc retainer, and seat shall be made of the same material. All necessary repairs and/or modifications other than replacement of the main valve body shall be possible without removing the valve from the pipeline. Packing glands and/or stuffing boxes shall not be permitted and components including cast material shall be of North American manufacture.

I. Pilot System: Pilot tubing shall be 316 S.S. construction. The pressure relief pilot control shall be a direct-acting, adjustable, spring-loaded, normally open, diaphragm valve designed to permit flow when controlled pressure is less than the spring setting. The pilot control is held open by the force of the compression on the spring above the diaphragm, and it closes when the delivery pressure acting on the underside of the diaphragm exceeds the spring setting. The pilot control system shall include a fixed orifice. No variable orifices shall be permitted. The pilot system shall include an opening speed control on all valves. The pilot control shall have a second downstream sensing port which can be utilized to install a pressure gauge. A full range of spring settings shall be available in ranges of 20 to 200 psi.

J. Remote Sensing: Valves used for pressure relief or unloading functions in a bypass arrangement shall be provided with a remote pilot sensing. The pilot system shall provide a digital output via flow switch when the valve is actuated.

K. The valve manufacturer shall also provide a computerized cavitation chart which show flow rate, differential pressure, percentage of valve opening, Cv factor, system velocity, and if there will be cavitation damage.

L. Valve manufacturers shall be CLA-VAL, Singer, Wilkens, or ENGINEER-approved equal.

PART 3 - EXECUTION

3.01 INSTALLATION

A. Valves shall be installed in accordance with the manufacturer's printed recommendations, and with provisions of these Specifications.

END OF SECTION

SECTION 40 0573 – MISCELLANEOUS PROCESS VALVES

PART 1 - GENERAL

1.01 THE REQUIREMENT

A. Provide all miscellaneous valves and appurtenances, complete and operable, in accordance with the Contract Documents.

1.02 SUBMITTALS

A. Furnish submittals in accordance with Section 01300 - Submittals.

1.03 OPERATION AND MAINTENANCE MANUAL

A. Provide six (6) hard copies plus one (1) electronic version in PDF format.

1.04 QUALITY ASSURANCE

A. Manufacturer and model shall be described on the Drawings, as specified herein, or Engineer approved equal.

B. The manufacturer shall provide a 2-year equipment warranty.

1.05 SPARE PARTS

A. Spares shall be as requested by the ENGINEER. Payment for spares shall be made in accordance with the General Conditions.

B. A list of spare parts for each piece of equipment shall be obtained from the manufacturer and submitted at the same time as Shop Drawings. The name, address, and telephone number of the nearest distributor for each piece of equipment shall be furnished.

PART 2 - PRODUCTS

2.01 FLOAT VALVES (2-INCHES OR SMALLER)

A. General**:** This valve is heavy duty mechanical float valve for controlling high capacity water flow.

B. The valves have bronze body construction with machine flanges on the inlet side (sizes 1” to 2” (25 to 50mm) have female NPT pipe threaded inlet connections), and male straight-pipe threaded for locknut on the outlet side. The connectors have serrated arms for easy adjustment of water level, bronze long and short arms, replaceable seals, and no-jam single lever action.

C. Maximum working pressure shall be 165 psi. Maximum working temperature shall be 180° F.

D. Valve shall be equipped with brass float stem and plastic float designed to work with the valve. Stem shall be of sufficient length for proper operation of the valve and to maintain the required level in the storage reservoir. Floats shall be injection molded polyethylene construction.

E. Float Valves shall be Watts or approved equal.

2.02 FOOT VALVES

A. Foot Valves shall be of the type designed to provide silent operation, positive sealing, and full flow area.

B. Valves shall be flanged, 125 lb., ANSI standard and of the center-guided, poppet-type, having a linear stroke to provide silent operation. Guide shafts and bushings shall be of the same material as the seat and disc, i.e., bronze, or stainless steel. The Buna-N seal shall be so designed to provide an initial contact of bronze to Buna-N with final contact being metal to metal to prevent destruction of the Buna-N seal ring.

C. Flow area thru the valve, including valve stroke, shall be equal to pipe size.

D. Valve inlet shall be provided with stainless steel screening. The screening should in no way reduce the full flow area of the valve. The screening shall be in the shape of a basket with the bottom also screened.

E. Standard construction to be cast iron body, bronze trim with stainless steel basket screening.

F. Valves shall be manufactured by:
   1. Val-Matic
   2. ENGINEER-approved equal.

2.03 MUD VALVES

A. The Mud Valve shall be of the heavy duty flanged type designed to provide a positive seal under both seating and unseating head conditions. The valves shall be rising stem style as detailed on the schedule or the plans. The frame, plug and yoke shall be cast iron (A126B) The valve operating stem and lift nut shall be bronze (B421) The seat ring shall be bronze (B62) with an accurately machined tapered seating face. The plug seat shall be a seamless molded, tapered resilient ring of BUNA-N designed to accurately mate with the seat ring for a positive seal.

B. Where required the manufacturer shall provide valve operating stems, Floor Stands and Stem Guides as specified in the valve schedule or plans.

C. The Mud Valves are to be coated using TNEMEC Pota Pox two-part epoxy, NSF approved coating.

D. Valves shall be manufactured by:
   1. Troy Valve, Waterman
   2. ENGINEER-approved equal.

2.04 BACKFLOW PREVENTER

A. General**:** Backflow preventers shall be a pressure type or reduced pressure type backflow preventer unit and associated components shall be equal in quality and performance to a “Foundation for Cross-Connection Control and Hydraulic Research”. Backflow preventers shall be Febco, Watts, Wilkins or ENGINEER-approved equal – Standard Orientation and include a fiberglass enclosure per Hot Box, appropriately sized for the backflow preventer. Enclosures shall protect against freezing down to 0°F. All backflow preventers shall be submitted for approval by the Town regardless of make or model.

2.05 TELESCOPING VALVE

A. General**:** Furnish and install manually-operated telescoping valves, complete and operable, as shown and specified, including appurtenances, operators, supports and accessories, in accordance with the requirements of the Contract Documents.

B. Valve Assembly**:** The telescoping valve assembly shall be of the rack and pinion type, of the size shown. The travel range shall be at least the amount shown. Assemblies shall consist of a handwheel pedestal (with offset if required) with handwheel operator, a rising stem, slip tube with flat weir crest skimming funnels, a tube guide collar with companion flange and gasket and a mounting bracket.
   1. Slip Tube: The slip tube and skimming funnel shall be of Type 316, Schedule 40 stainless steel, with a seal to prevent leakage at the seam.
   2. Stem: The stem shall be minimum ¾-inch, Type 316 stainless steel, with a travel and height indicating device calibrated in 1-inch increments. A suitable stem lock shall be provided for holding the stem at the desired level.
   3. Guide Collar: Guide collar shall include a neoprene gasket and cast iron companion flange for securing to the receiving pipe as shown.
   4. Mounting Bracket: A cast iron bracket shall be provided for mounting the operator pedestal with stainless steel anchor bolts.
   5. Fastening Hardware: All nuts and bolts and other fastening hardware shall be Type 316 stainless steel.
   6. Coating: Coating of all ferrous surfaces, except stainless steel, shall be in accordance with these Specifications.

C. Valve shall be Troy Valve, Waterman or ENGINEER-approved equal.

PART 3 - EXECUTION

3.01 INSTALLATION

A. Valves shall be installed in accordance with the manufacturer's printed recommendations, and with provisions of these Specifications.

END OF SECTION

SECTION 40 0597 – IDENTIFICATION FOR PROCESS PIPING

PART 1 - GENERAL

1.01 THE REQUIREMENT

A. The CONTRACTOR shall furnish, paint, mark, and paint/install identification devices for all exposed piping and piping in accessible chases and areas above ceilings with panels, and valves using, lettering, flow direction arrows, and related permanent identification devices, and all appurtenant works, in accordance with the requirements of the Contract Documents.

1.02 REFERENCE SPECIFICATIONS, CODES AND STANDARDS

A. Comply with the reference specifications of the General Requirements.

B. OCSD TAGGING PROCEDURE

1.03 CONTRACTOR SUBMITTALS

A. Submittals shall be made in accordance with Section 01 3300 – Submittal Procedures.

B. The CONTRACTOR shall submit samples of all types of identification devices to be used in the work.

C. QUALITY ASSURANCE (NOT USED)

PART 2 - PRODUCTS

2.01 IDENTIFICATION OF PIPING

A. All exposed piping and piping in accessible chases and areas above ceilings with panels, including stainless steel, galvanized steel, copper, CPVC, and Fiberglass RTR piping, shall be completely and totally painted for identification purposes. Piping all be identified with lettering or tags designating the service of each piping system, shall have flow directional arrows. All piping scheduled to be color-coded shall be completely painted or coated with the colors indicated in the schedule below.

B. Each pipe identification shall consist of color-coding in accordance with Subsection 3.04 IDENTIFICATION SCHEDULE, a painted label, and a directional flow arrow. Piping identification shall be located in accordance with Subsection 3.03 PIPE IDENTIFICATION LOCATION.

C. For cases where there are insulated lines wrapped with aluminum sheathing, stainless steel sheathing, or gray fabric, the background color shall be applied to a 24-inch length of pipe section and color band centered within the 24 inch field of background color.

D. Paint Colors: Paint colors shall conform to the following designations:

Color	**Mgf./No.**
Paper White	DuPont 40P-1031
	Tnemec F075-WH01A
	Dunn Edwards IP630-SY-1
Dark Brown	DuPont 40P-1039
	Tnemec F075-D2526A
	Dunn Edwards IP630-SY-25
Safety Red	DuPont 333-23664
	Tnemec F075-S1170A
	Dunn Edwards IP630-SY-19

Safety Orange	DuPont 40P-1030 Tnemec F075- S1169A Dunn Edwards IP630- VD9222
Light Gray	DuPont 333-23662 Tnemec F075- A2606A Dunn Edwards IP630- RL7422
Caribbean Blue	DuPont 40P-1048 Tnemec F075-B2478A Dunn Edwards IP630-UD10264
Safety Blue	DuPont 40P-1048 Tnemec F075-B2477A Dunn Edwards IP630-VD10265
Spectra Master (Dark Blue)	DuPont 40P-1496 Tnemec F075-B2476A Dunn Edwards IP630-SY-23
Custom Formula (Purple)	DuPont 40P-1628 Tnemec F075-R1217A Dunn Edwards IP630-SY-13
Cool Green	DuPont 40P-1008 Tnemec F075-S1168A Dunn Edwards IP630-UL9585
Safety Yellow	DuPont 333-23663 Tnemec F075-S1167A Dunn Edwards IP630-UD9223

E. Lettering

1. Identification labels and directional arrows shall be painted directly on piping using stencils or makers.
2. Pipe identification markers shall be vinyl or polyester construction with an adhesive strip, coiled to wrap completely around the pipe (no straps) and have subsurface printing. Pipe less than six inches shall have lettering to meet ANSI A13.1 standards.
3. The size of the letters for identification labels shall be as follows:

PIPE OUTSIDE DIAMETER*	LETTER SIZE
5/8” to 1 1/4”	1/2” high
1 1/2” to 3”	1” high
Over 3”	2” high

*Outside pipe diameter shall include insulation and jacketing.

4. Identification markers shall have letters, directional arrows and colors as follows:

Plant Water	Black Letters on Yellow Field
Industrial Water	Black Letters on Yellow Field
Potable Water	White Letters on Green Field
Reclaimed Water	Black Letters on Yellow Field
Fire Protection Water	White Letters on Red Field
High Pressure Air	White Letters on Blue Field
Instrument Air	White Letters on Blue Field
Sludge	Black Letters on Yellow Field
Steam	Black Letters on Yellow Field
Drain	Black Letters on Yellow Field
Acid	Black Letters on Yellow Field

Caustic Solution	Black Letters on Yellow Field
Polymer	Black Letters on Yellow Field
Ferric Chloride	Black Letters on Yellow Field
Sodium Hypochlorite	Black Letters on Yellow Field
Hydrogen Peroxide	Black Letters on Yellow Field
Digester Gas	Black Letters on Yellow Field
Natural Gas	Black Letters on Yellow Field
Electrical	Per Specification Division 26

PART 3 - EXECUTION

3.01 GENERAL

A. All labels shall be installed in accordance with the manufacturer's printed instructions, and shall be neat and uniform in appearance. All such tags or labels shall be readily visible from all normal working locations.

3.02 VALVE TAGS

A. Valve tags shall be permanently attached to the valve or structure as specified in the OCSD TAGGING PROCEDURES.

B. The wording on the valve tags shall describe the exact function of each valve, e.g., "HWR-BALANCING," "CLS THROTTLING", "RAS-PUMP SHUT-OFF," etc.

3.03 PIPE IDENTIFICATION LOCATION

A. Straight lines of pipe shall be identified at intervals of 20 feet maximum, and at least once in each room unless otherwise directed by the ENGINEER.

B. Piping shall also be identified at a point approximately within 2 feet of all turns, ells, valves, and the upstream side of all distribution fittings or branches and on both sides of each floor, wall, or barrier through which the line passes.

3.04 IDENTIFICATION SCHEDULE

A. Application of identifying devices shall conform to the following color codes, or match existing color code as directed by the ENGINEER.

MATERIAL IN PIPE	**COLOR**
Potable Water (RP Device)	Caribbean Blue
Fresh Water (Air Gap)	Caribbean Blue
Industrial and/or Cooling Water	
LPE	Purple (Custom Formula)
MPE	Purple (Custom Formula)
HPE	Purple (Custom Formula)
HPE (continuously chlorinated)	Purple (Custom Formula)
Fire Water	Caribbean Blue
Industrial Water	Dark Blue
Cooling Water Supply-Plant Effluent	Safety Blue
Cooling Water Return-Plant Effluent	Safety Blue
Cooling Water Return-Industrial Water	Dark Blue
Cooling Water Supply-Industrial Water	Dark Blue
Reclaimed Water	Purple (Custom Formula)
Final Effluent	Safety Blue
Irrigation (continuously chlorinated eff.)	Purple (Custom Formula)

Chemical Supply Lines (Extremely Dangerous)	
Chlorine (gas or liquid)	Cool Green
Chlorine Solution	Cool Green
Sodium Hydroxide	Cool Green
Chlorinator Vent and Detection Lines	Cool Green
Hydrazine	Cool Green
Lime Slurry	Cool Green
Sodium Hypochlorite	Cool Green
Ferric Chloride	Cool Green
Ferrous Chloride	Cool Green
Phosphoric Acid	Cool Green
Concentrated Sulfuric Acid	Cool Green
Dilute Sulfuric Acid	Cool Green
Chemical Draw and Vent	Cool Green
Dilute Acid	Cool Green

Chemical Supply Lines	
Polymer-Anionic	Cool Green
-Cationic	Cool Green
-Nonionic	Cool Green
-Dist.	Cool Green
-Effluent	Cool Green
Chemical Draw and Vent	Cool Green
Sulfite/Bisulfite Scrubbing Liquid	Cool Green
Stratford Solution (Scrubbing Liquor)	Cool Green

Sludge/Ash Transport and Process Lines	
Blended Sludge	Light Gray
Bottom Sludge	Light Gray
Centrate (from digested sludge dewatering)	Light Gray
Centrate (H_2S Scrubbing)	Light Gray
Circulated Sludge	Light Gray
Digested Sludge	Light Gray
Sulfur Slurry (H_2S Scrubber)	Light Gray
Filtrate	Light Gray
Raw Sludge	Light Gray
Screened Digested Sludge	Light Gray
Activated Sludge	Light Gray
Digester Cleanings	Light Gray
Digested Sludge to Screenings	Light Gray
Digested Sludge to Blending Tanks	Light Gray
Digested Sludge Recirculated/Transfer	Light Gray
Digested Sludge Withdrawal	Light Gray
Thickened Waste Activated Sludge	Light Gray
Return Activated Sludge	Light Gray
Thickener Subnatant	Light Gray
Thickener Subnatant Overflow	Light Gray
Cyclone Effluent	Light Gray
Grit	Light Gray
Mixed Liquor	Light Gray
Thickener Pressurized Recycle	Light Gray
Scum	Light Gray

Sludge/Ash Transport and Process Lines	
Ash (hydraulic)	Light Gray
Processed Condensate	Safety Blue
Process Effluent	Safety Blue
Final Clarifier Influent	Safety Blue

Pneumatic Transport Lines	
Sludge Derived Fuel	Cool Green
Hot Ash	Cool Green
Sand Transport	Cool Green

Air and Vacuum Supply Lines	
Oxygen (gaseous)	Cool Green
Oxygen (liquid)	Cool Green
Combustion Air	Paper White
Compressed Air (non-instrument)	Paper White
Instrument Air	Paper White
Process Air	Paper White
Product Air	Paper White
Foul Air	Paper White
Nitrogen (liquid)	Cool Green
Nitrogen (gaseous)	Cool Green
Vacuum	Paper White
Vent Duct	Paper White

Boiler Waters	
Boiler Feedwater Makeup	Caribbean Blue
Boiler Feedwater	Caribbean Blue
Continuous Blow-down	Dark Blue
Demineralized Water	Dark Blue
H. P. Condensate	Dark Blue
L. P. Condensate	Dark Blue
M. P. Condensate	Dark Blue
Intermittent Blow-down	Dark Blue
Softened Water	Dark Blue
Reverse Osmosis Treated Water (permeate)	Purple (Custom Formula)

Steam	
L. P. Steam	Safety Red
M. P. Steam	Safety Red
H. P. Steam	Safety Red

Lube and Hydraulic Oils	
Hydraulic Oil Supply	Safety Yellow
Hydraulic Oil Return	Safety Yellow
Lube Oil	Safety Yellow
Drain Oil	Safety Yellow
Oil Vapor	Safety Yellow
Grease	Safety Yellow
Defoamant-Sludge Blending Tanks (Kerosene)	Safety Yellow

Fuel Supply	
Natural Gas/LNG/Propane	Safety Yellow
Digester Gas: LP, MP, and HP	Safety Yellow
Diesel	Safety Yellow

Lab	
Distilled Water	Dark Blue
Salt Water	Dark Blue

Miscellaneous	
Equipment Vent	same as equipment
Sample Line	same as line or equipment being sampled
Spare Chemical	same as chemical

Sanitary Sewer/Storm Drains	
Roof Drain	Dark Brown or same color as bldg. walls
Plant Drain	Dark Brown
Storm Drain	Dark Brown
Sump Pump Discharge	Dark Brown
Sanitary Sewer	Dark Brown
Sanitary Vent	Dark Brown
Influent Raw Sewage (up to primary tanks)	Light Grey
Demineralized Waste	Dark Brown
Reverse Osmosis Reject	Dark Brown

END OF SECTION

SECTION 40 4200 – PROCESS PIPING AND EQUIPMENT INSULATION

PART 1 - GENERAL

1.01 THE REQUIREMENT

A. The CONTRACTOR shall furnish and install all pipe and equipment insulation, complete and operable, in accordance with the requirements of the Contract Documents. In addition to the insulation shown and specified, the CONTRACTOR shall insulate any cold or hot piping and exhausts that could be subject to freezing or hazardous to plant personnel upon contact.

B. All steam and hot or chilled water piping shall be insulated with fiberglass metal jacketed insulation to form a watertight and weatherproof system.

C. Exposed process piping shall be heat taped and insulation against freezing as shown per the Contract Documents.

D. All air process piping within the blower building which passes through spaces above finished ceilings, or are suspended over equipment, electrical panels, or cabinets shall be insulated. Refer to the plans for insulation locations and requirements for air process piping.

E. All unions, flanges, mechanical joints, valves, strainers, steam traps, and other devices in insulated piping systems shall be insulated in the same manner as the adjacent piping. Operators, instruments, and other features requiring routine access shall not be covered. Insulation over removable devices shall be easily removable and replaceable.

F. Insulation on any buried piping need not be jacketed.

1.02 REFERENCE SPECIFICATIONS, CODES AND STANDARDS

A. Comply with the reference specifications of the General Requirements.

B. Comply with the current provisions of the following Codes and Standards.

1. Federal Specifications:
   a. HH-1-558B Insulation Blocks, Boards, Blankets, Felts, Sleeving (Pipe and Tube Covering), and Pipe Fitting Covering, Thermal (Mineral Fiber, Industrial Type)
2. Commercial Standards:
   a. ASTM C547 Specification for Mineral Fiber Preformed Pipe Insulation
   b. ASTM E84 Test Method for Surface Burning Characteristics of Building Materials

1.03 SUBMITTALS

A. Shop Drawings: Shop drawings shall be submitted in accordance with Section 01 3300 – Submittal Procedures.

1. The following submittals and specific information shall be provided.
   a. The CONTRACTOR shall submit complete shop drawings showing locations of placement of all thermal insulation, with manufacturer's data on materials, covering, jackets, and finish.

PART 2 - PRODUCTS

2.01 INSULATION

A. All components of the insulation, including covering, mastics and adhesives shall have a flame-spread rating of not over 25, and a smoke development rating of not over 50. Ratings shall be as established by tests in accordance with ASTM E84 and Federal Specification standards. The integrated insulation assemblies shall also conform to the above specifications. Insulation shall be applied in strict accordance with the manufacturer's instructions.

B. MATERIALS

1. Standard Insulation: This type of insulation shall be employed for process, cold-and hot water, steam, and condensate piping and equipment with surface temperatures up to 850 degrees F. Pipe insulation shall be molded-type pipe covering, made of fibrous glass with a minimum k-factor of 0.23 at 75 degrees F mean temperature. The insulation shall be oversized for installation over electric heating cable. Unless otherwise specified the insulation thickness shall be as follows:

Pipe Insulation:

	Minimum Thickness of Insulation (Inches)
Hot and cold water (domestic)	
6 inches and smaller	1
Hot and chilled water process	
6 inches and smaller	1-1/2
8 inches and larger	2
Low pressure steam (50 psi and less)	
8 inches and less	2
Condensate, boiler blowdown, and boiler feed	
8 inches and less	1-1/2
Heated sludge and process piping	
6 inches and smaller	1
8 inches and larger	1-1/2
Heat traced piping	
3 inches and smaller	1
4 inches and larger	1-1/2
EQUIPMENT AND TANKS	
Boilers, heaters, and manufactured equipment	As recommended by manufacturer
Heat exchangers, tanks, and vessels	3
Blower Discharge, blow-off, and motor exhaust lines	3

2. Vapor barrier: Insulation shall have a factory-applied white fire-retardant vapor-barrier jacket of kraft paper and aluminum foil laminated together and reinforced with fiberglass yarn.
3. Insulation at Supports: Insulation shall be coordinated with the pipe hangers and supports and where insulation protection shields are provided the top half section of pipe insulation at support locations shall be of the same specified density, and the bottom half insulation segments provided between the pipe and the insulation protection shields shall have a density of not less than 6 lb./cu ft.

C. Manufacturers, or ENGINEER-approved Equal:

1. Johns Manville, Micro-Lok HP
2. Owens Corning, Fiberglas SSL II with ECOSE

3. CertainTeed, InsulPure

D. High Temperature Insulation: This type of insulation shall be employed for engine exhaust pipes, flues, and similar pipes and equipment with surface temperatures up to 1200°F. The high temperature insulation shall consist of 4-inch thick calcium silicate or similar pre-molded blocks with a minimum k-factor of 0.14, in two layers of 2-inch thickness, each, with staggered joints, all applied over a 3/4-inch high metal rib lath. The inner layer shall be suitable for 1200°F, and the second layer for 1000°F. All bends, voids, joints, fittings, and other parts of the piping system shall be filled with insulating cement. Aluminum lagging with preformed aluminum fittings shall be banded to the insulation in a similar fashion as specified for standard insulation. Allowance shall be made for thermal expansion.

E. Metal Jacketing
1. General: All insulation shall be covered with smooth aluminum weatherproof jacketing with a factory-attached moisture barrier.
2. The jacket for the fittings shall consist of precision-formed smooth-sided sections and shall be sized to cover and protect the insulated fitting. Each section shall be manufactured from aluminum, and all joints shall be sealed with silicon mastic, to provide a continuous, air and weathertight joint. Strapping shall be 1/2-inch wide, Type 3003 aluminum or Type 304 stainless steel.
3. The jacket at insulated valves shall fit over the removable insulation and be easily removed and re-installed. It shall be held in place by adjustable stainless-steel hose clamps.
4. Metal jacketing shall be 0.016-inch thick, smooth finish aluminum sheet conforming to ASTM B209, alloy 5005, temper H16, with integral vapor barrier. Sheet metal screws shall be aluminum or stainless steel. Jackets shall be secured with 0.020 by ¾-inch Type 304 stainless steel expansion bands.

2.02 HEAT CABLE

A. Heating cable shall be self-regulating through the use of a thermostat for freeze protection. Heating cable shall be applicable to the type of pipe material being protected.

B. Heating cable shall utilize 120VAC and provide heating power of minimum of 5 watt/ft @ 50°F.

PART 3 - EXECUTION

3.01 INSTALLATION

A. All insulation and heat cables shall be installed by a qualified insulation CONTRACTOR in strict accordance with the manufacturer's recommendations and the requirements of these specifications.

B. Insulation shall be installed over heat cable where required.

C. Piping shall be tested and shall be approved by the ENGINEER prior to insulation installation.

D. All end joints of insulation shall be tightly butted.

E. All seams and joints shall be held by manufacturer's standard adhesive.

F. Jacket laps shall be neatly pasted in place.

G. All joints shall be pointed with insulating cement.

H. Fittings and valves shall be covered with the same material as the pipe, cut in segments to fit snugly without open spaces, held in place with copper wire or cement, and then covered with the same jacketing material as the pipe.

I. Insulation at valves and other devices shall be formed into two halves, easily removable for valve maintenance. The halves shall be constructed from segments cemented together to fit the valve and to extend over the adjacent piping insulation.

Insulated fittings adjacent to vapor-barrier insulation shall be sealed with acceptable vapor-barrier cement before installation of the finish jacket.

J. Pipe insulation and vapor-barrier shall be continuous through hangers and supports. Hangers shall permit insulation to pass through. Suitable saddles shall be provided to prevent the weight of the piping from being supported by the insulation.

END OF SECTION

SECTION 40 6113 – INSTRUMENTATION AND CONTROL FOR PROCESS SYSTEMS

PART 1 - GENERAL

1.01 REQUIREMENT

A. This Section includes the general requirements for furnishing and installing the Instrumentation, Control and Monitoring equipment as indicated on the Drawings and in these Specifications. Other instrumentation and control Sections of this Division shall supplement this Section as necessary.

B. The intent of the instrumentation and control Sections of these Specifications is to require that all instrumentation as indicated, specified, and/or required, shall be furnished by a single competent, qualified Instrumentation and Control Integrator (hereinafter referred to as the I&C INTEGRATOR) to assure system compatibility and coordination with all other subsystems.

C. Labor, materials, apparatus, and components essential to the complete functioning of systems described and indicated herein, or which may be reasonably implied as essential, whether mentioned in the Contract Documents or not, shall be furnished and installed by the I&C INTEGRATOR. In case of doubt as to the work intended, or in the event of need for explanation thereof the I&C INTEGRATOR shall refer to the ENGINEER for supplemental instructions.

D. All items not specifically mentioned in these specifications or noted on the Drawings, or on shop drawings, but which are necessary to make a complete and satisfactory, working electrical/instrumentation installation, shall be deemed to be included herein. The Construction Documents are not intended to show every fitting, junction, or component nor every difficulty that may be encountered during installation or coordination with different equipment manufacturers. The I&C INTEGRATOR shall refer to related data in all Contract Documents and shall verify this information on site.

E. Unless otherwise indicated, all equipment and components shall' be rated for use in the environment installed. Outdoor equipment shall be weatherproof or rated for outdoor use. Equipment installed in corrosive areas shall be rated for that environment. Equipment installed in a hazardous area shall be explosion-proof. In case of doubt as to the area classification, or need for explanation thereof, or discrepancies noted between components specified and the environment installed the I&C INTEGRATOR shall refer to the ENGINEER for supplemental instructions.

1.02 REFERENCES

A. The specifications reference known standards and codes. Each such standard referenced shall be considered a part of the Specifications to the same extent as if reproduced therein in full. The following is a representative list of such Associations, Institutes and Societies, together with the acronym by which each is identified.

1. AIEE American Institute of Electrical ENGINEERs
2. ANSI American National Standards Institute
3. ASTM American Society for Testing and Materials
4. ICEA Insulated Cable ENGINEERs Association
5. IEEE Institute of Electrical and Electronics ENGINEERs
6. NEC National Electrical Code (2002)
7. NEMA National Electrical Manufacturers Association
8. NETA National Electrical Testing Association
9. NFPA National Fire Protection Association
10. UL Underwriter's Laboratories, Inc.

B. Every reference in the Specifications shall mean the latest printed edition of each in effect at the Contract date or latest edition as adopted by the local governing authority.

1.03 SUBMITTALS

A. Submittals shall be furnished in accordance with Sections 01 3300 – Submittal Procedures.
   1. Where applicable, provide complete manufacturer's part number, identifying scaling, operating range, housing, and wetted parts materials, NEMA rating, product options, consumable materials, and other pertinent information.
   2. Prior to Final Acceptance of the work, the I&C INTEGRATOR shall provide Operations and Maintenance Manuals, in accordance with the Contract Documents.
   3. Descriptive Data: Submit copies of complete descriptive literature, performance data, physical dimensions, power and signal connections for each component and equipment to be furnished. Provide name of manufacturer, style, and complete model number. Listing items "as specified" without both make and model or type designation is not acceptable.
   4. Component Data Sheets: Submit a component data sheet for each piece of instrumentation equipment similar to an ISA S20 form. Include equipment tag number, manufacturer's model number, location of service, materials of construction, size and scale range, calibrated range, setpoints, optional accessories and any other useful information.
   5. Important Notice:
      a. After material or equipment has been submitted and approved, no substitutions will be allowed.
      b. If I&C INTEGRATOR's submittal(s) depart from the Contract Documents, the I&C INTEGRATOR shall make specific mention thereof in his letter(s) of transmittal, otherwise review of such submittals by the ENGINEER shall not constitute review of such departure(s).
      c. The I&C INTEGRATOR may be charged for costs incurred by the ENGINEER for third and subsequent submittal reviews. Cost for ENGINEER's review time shall be billed at the ENGINEER's standard hourly rates.
   6. Control System Drawings: Submit 11" X 17" detailed shop drawings indicating dimensions, component layout, mounting details, wiring diagrams, nameplate legends and bill of materials for each control panel.
      a. Wiring diagrams shall include all interconnections, inter-wiring, and terminals between all electrical and/or instrumentation units. Wire numbers shall be continuous from start to finish. Wire numbers shall not change when going from one unit, cabinet, enclosure, terminal, or any device to another.
      b. Discrete control and power circuits: Submit ladder diagrams indicating all panel devices related to discrete functions mounted in or on control panel.
      c. Show unique rung numbers on left side of each rung. Label each wire, coil, and terminal block. Show individual component terminal numbers.
      d. Analog signals: Indicate the entire analog loop on the wiring diagram including all devices connected in series and location of each device. Indicate loop power supplies and individual component terminal numbers. Indicate wire and terminal numbers of each device in the loop.
      e. Use different symbols for terminal blocks located in different pieces of equipment. Label each terminal block and wire termination point.
      f. Show each PLC I/O point rack, slot, terminal number, and PLC configured address on each drawing.

7. Submit a complete PLC I/O listing including instrument tag numbers and descriptions. The I/O list shall contain the PLC rack, slot, terminal number, and PLC address. Submit a complete PLC program database cross-reference list linking each database and internal register with its associated I/O point(s).

1.04 QUALITY ASSURANCE

A. Equipment to be furnished under this Section shall be the product of firms regularly engaged in the design and manufacture of this type of equipment. Manufacturer shall assume responsibility for, and guarantee performance of equipment furnished. However, this shall not be construed as relieving the I&C INTEGRATOR from responsibility for the proper installation and functioning of the work.

B. The manufacture shall provide a 2-year equipment warranty.

C. The I&C INTEGRATOR must have a minimum of three (3) years' experience as a system integrator, panel fabricator and instrumentation supplier for other projects of similar type, size, and requirements. The I&C INTEGRATOR must submit documentation from his selected panel fabricator verifying the experience and UL 508A file number.

D. All equipment furnished shall be new and of current design. Like equipment shall be of the same manufacturer.

1.05 SYSTEM RESPONSIBILITY

A. The I&C INTEGRATOR shall have total responsibility for the work as specified in the instrumentation and control specifications of this Division. This includes but is not necessarily limited to furnishing system components, system integration and design, wiring diagrams, loop drawings, programming, installation supervision, field instrument calibration, start-up, testing and operator training.

B. The Prior to start of work, the I&C INTEGRATOR shall verify all existing field conditions. This includes creating as-built plans and documentation of all required field wiring, I/O, loop drawings, etc. as needed. Any conflict with design documents shall be brought up to the ENGINEER.

C. The I&C INTEGRATOR is a Subcontractor. Therefore, references made to the responsibilities and requirements of the CONTRACTOR shall only mean that the responsibilities and requirements pass through the CONTRACTOR and that the final responsibility for all Control and Instrumentation systems rests with the I&C INTEGRATOR.

1.06 OPERATING AND MAINTENANCE MANUALS

A. Operating and Maintenance Manuals (O&M): The I&C INTEGRATOR shall provide O&M manuals for equipment and materials furnished under this contract. Submit number of copies as specified in these specifications (min. 4). Assemble data in a single complete indexed volume and identify the size, model, and features indicated for each item. Equipment O&M manuals shall include the following information as a minimum:
   1. A neatly typewritten index near the front of the manual furnishing immediate information as to the location in the manual of emergency data regarding installation.
   2. Installation requirements and procedures.
   3. Complete instructions regarding the operation and maintenance of equipment involved. Instructions and documentation not related to the equipment furnished must be removed or crossed out. O&M manuals must be individually tailored to the project and equipment as furnished.
   4. Bill of Materials, component data sheets, descriptive literature, product specification sheets, wiring diagrams and calibration procedures. O&M manuals must be individually tailored to the project and equipment as furnished.

5. Complete nomenclature of replaceable parts, part numbers, current cost, name, and address of nearest vendor of replacement parts. Information on equipment or components not related to equipment furnished must be removed or crossed out. O&M manuals must be individually tailored to the project and equipment as furnished
6. Copy of warranties issued on the installation, showing dates of expiration.
7. Provide a copy of all instrument calibration reports.

B. Operator interface/PLC cross-reference table/interface list. The cross-reference list shall include all PLC registers linked to each operator interface display feature. The list shall include the operator interface tag, PLC address, I/O type, and range of analog signals in engineering units.

C. Four (4) copies of the final PLC programs on 8-1/2" x 11" paper and two (2) copies on CDROM after final acceptance of the project. The electronic copies shall be a complete set of fully documented programming files as used by the I&C INTEGRATOR in programming all PLCs. The programs (including electronic copies provided) shall be well documented with control descriptions.

D. Two (2) digital copies of all final operator interface configuration files after final acceptance of the project.

1.07 RECORD DRAWINGS

A. Record Drawings: Upon completion of work, I&C INTEGRATOR shall furnish a complete set of Record Drawings and Shop Drawings which properly reflect final tested system, loop diagrams, PLC programs, etc., as actually installed. Drawings shall accurately record the final constructed system and shall be labeled as "RECORD".

1.08 COORDINATION

A. The I&C INTEGRATOR shall coordinate with all other equipment manufacturers to avoid conflicts and interferences. No extra compensation will be allowed for changes made necessary due to conflicts between various equipment.

B. Any discrepancies noted in these contract documents or discrepancies between Drawings and actual field conditions shall be promptly brought to the ENGINEER for a decision. No extra compensation will be allowed for changes made by the I&C INTEGRATOR without ENGINEER's consent.

C. The I&C INTEGRATOR shall be responsible for coordination of control panel fabrication, testing and instrumentation system installation with configuration of both PLCs and operator interfaces. Project completion will not be granted to the I&C INTEGRATOR until programming and configuration has been completed and complete automatic operation has been tested.

1.09 WARRANTY

A. In addition to specific warranties required by the Specifications, the I&C INTEGRATOR shall leave the entire installation in complete working order and free from defects in materials, workmanship, or finish. I&C INTEGRATOR shall repair or replace at his own expense any part that may develop defects due to faulty material or workmanship during the tests and within a period of one year (minimum, or as indicated elsewhere) after substantial completion acceptance. The I&C INTEGRATOR shall repair or replace existing equipment and work that is damaged during the repair of defective apparatus, materials, or workmanship at no cost to the OWNER.

B. All manufacturers' warranties shall be filled out in their entirety by the I&C INTEGRATOR for the OWNER using the OWNER's name and address. Equipment warranty periods will commence on date of final acceptance.

PART 2 - PRODUCTS

2.01 STANDARD EQUIPMENT

A. Furnish and install equipment of the type specified which has been proven to operate successfully. Material or equipment that has been specified or called out by manufacturer and/or model number is approved by the ENGINEER. All other equipment may be selected based on equal quality and performance. If the I&C INTEGRATOR wishes to use an alternate manufacturer to that indicated on the plans or specified herein, the I&C INTEGRATOR shall submit to the ENGINEER for approval, along with a written request stating the reason(s) for the substitution. The ENGINEER and the OWNER shall review such requests and have final approval prior to purchase or installation. The I&C INTEGRATOR shall be responsible for the design and installation requirements with no additional charge/fee to the OWNER.

B. All control panel components shall be UL recognized and ground fault protected per UL 508A fabrication standards. Each control panel assembly shall bear a serialized UL 508A label.

C. All instrumentation equipment and control panel components shall be capable of operating successfully at full-rated load, without failure, at an ambient air temperature of 50°C, and specifically rated for the altitude in which the equipment will be placed in service. If equipment cannot operate under the specified conditions or excessive heat build-up is expected to exceed component rating, the I&C INTEGRATOR shall supply heat mitigation measures to reduce the operating temperature within the control space to that specified by the manufacturer.

D. Instrument tubing shall be soft annealed, ASTM B280 copper with soldered connections. Tubing bends shall be made with a tubing bender. Tubing shall be run straight, vertical, or horizontal and secured with straps or clamps.

PART 3 - EXECUTION

3.01 FACTORY ACCEPTANCE TEST

A. Prior to final acceptance of the work, the I&C INTEGRATOR shall certify the equipment and installation included under this Section to be free of defects, and suitable for trouble-free operation under the conditions set forth in these specifications. This requirement is in addition to the manufacture's guarantee.

B. Before delivering any control panels to the site, the I&C INTEGRATOR shall notify the ENGINEER in writing at least two weeks prior so that a factory acceptance test can be performed. The test shall be conducted only after the I&C INTEGRATOR has performed his testing, calibrations, and check-out of the system.

C. The PLC and operator interface programs shall be thoroughly tested. Each input and output signal shall be tested for proper indication and control function. The PLC control logic will be tested by using simulated inputs and tripping interlocks.

D. The factory acceptance test shall be conducted by the I&C INTEGRATOR. The test shall be witnessed by the ENGINEER.

E. A successful factory acceptance test only allows the I&C INTEGRATOR to ship the system to the site. It does not constitute final acceptance by the OWNER.

3.02 INSTALLATION

A. Equipment and materials specified in this Section shall be installed and connected as specified, and as shown on the Plans. The I&C INTEGRATOR shall coordinate the installation with the other trades, to insure proper installation of the control instrument, components and associated conduit and cables.

B. The I&C INTEGRATOR shall calibrate the instruments to the proper ranges, as required by the OWNER and the ENGINEER. Where analog signals are connected to local or remote monitoring equipment, the I&C INTEGRATOR shall verify that the calibrated ranges and scaling of the local and remote indicators are correct.

C. The I&C INTEGRATOR shall furnish the services of instrumentation technicians or control system engineers trained and experienced in the installation of the various instrument and control equipment being supplied. These services shall be utilized by the I&C INTEGRATOR as he deems necessary to supervise installation, calibrate, troubleshoot, and put equipment into service.

3.03 INSTRUMENT CALIBRATION

A. The I&C INTEGRATOR shall provide the services of a factory representative with the proper tools and equipment to properly calibrate and adjust each instrument in the field. The ENGINEER shall be notified when the factory representative will be onsite to witness instrumentation calibration and setup. This site visit by the factory representative may also be utilized for the OWNER designated operator training as required below.

B. Each instrument shall be tested with certified test instruments simulating inputs at 0, 25, 50, 75 and 100 percent of the calibrated range. Ten (10) data points shall be recorded by ascending to 100 percent than descending back to O. Data shall be recorded on a prepared Instrument Calibration Report with the following information:

1. Instrument description
2. Type and location of service
3. Manufacturer, model, and serial number of instrument
4. Scale range and engineering units
5. Testing method and description
6. Input values or settings
7. Output values (recorded data)
8. Calibrations notes or explanations
9. Technician's name, date, and signature
10. Copy of the test instrument calibration report. Testing instrument must have been calibrated within one year prior to calibration date.

3.04 FINAL ACCEPTANCE

A. Upon completion of instrument calibration and system validation, all systems to be retested under process conditions. The OWNER, ENGINEER, and I&C INTEGRATOR shall perform this test as a final acceptance test for each instrument or piece of equipment. The process variables will be pushed to their limit to verify accuracy, alarms, and interlocks. Any defects or problems will be corrected immediately. Once all testing has been completed to the OWNER's satisfaction, the I&C INTEGRATOR shall submit a certified report with all substantiating data sheets indicating that the total instrumentation and control system meets the functional intent of the Contract Documents.

B. After installation of the system and checkout by the OWNER, ENGINEER and I&C INTEGRATOR, a performance test shall be performed per these Specifications. The test shall include an operational demonstration during which the system shall run continuously without loss of basic functions. The operational demonstration shall confirm that the status, alarm, and process variable signals are valid and are being updated appropriately. If additional time or tests are need due to improper function of the control system, the I&C INTEGRATOR shall perform the necessary work at no cost/fee to the OWNER.

3.05 SPARE PARTS

A. Provide the OWNER with a list of the manufacturers' recommended spare parts.

END OF SECTION

SECTION 40 6196 – PROCESS CONTROL DESCRIPTIONS

PART 1 - GENERAL

1.01 THE REQUIREMENT

A. This Section includes the general system overview and description of logic for each piece of equipment being controlled by the Filtration Control Panel. Other Sections shall supplement this Section as necessary.

B. The intent of this Section is to provide guidance to the CONTRACTOR and to the Contractor's I&C INTEGRATOR in the programmable logic function for various I/O signals indicated on the Drawings. The control and monitoring functions described herein cover the basic logic to be performed with each I/O signal. These control descriptions are not intended to cover every possible scenario or describe every possible timer, interlock, safety shutdown, etc. that may be necessary for a complete operational system. The primary function of these control descriptions is to provide the I&C INTEGRATOR with information that cannot be indicated in electrical schematic diagrams. A brief description of signals to be provided to/from packaged control panels has also been provided herein. It is also the intent of this Section to list the minimum control, monitoring and alarm functions to be displayed on the PLC and SCADA screens.

C. An attempt has been made on the Drawings and in these Specifications to describe system logic and functionality as well as show signals, interlocks, and devices necessary for proper operation of the control and monitoring systems. However, if a particular signal, device, sensor, interposing control relay, signal converter, control logic, interlock (hardware or software), etc., is required to meet the intent or operational requirements and is not indicated, the I&C INTEGRATOR shall furnish and install this piece of equipment with no extra compensation.

D. All alarm conditions shall be maintained until manually reset and/or acknowledged unless otherwise indicated herein or on the Drawings.

E. The I&C CONTRACTOR shall be fully responsible for the proper operation of all control equipment and documentation of all modifications made to programs at project completion.

PART 2 - PRODUCTS (NOT USED)

PART 3 - EXECUTION

3.01 OPERATOR INTERFACE CONFIGURATION (HMI)

A. The I&C CONTRACTOR shall be responsible for developing a minimum of three (3) operator interface screens to display and control I/O as indicated on the Drawings and as described herein. The displays shall be reviewed during the submittal stage. A brief written description of each graphic screen shall be provided to the Engineer for review prior to the I&C CONTRACTOR beginning screen development or the graphic display portion of the submittals. The Engineer will review the operator interface screens again during the submittal review stage and yet again during startup and system demonstration. If minor modifications are deemed necessary or requested by the Engineer or Owner during startup, the I&C CONTRACTOR shall make the modifications at no additional cost.

B. The operator interface shall be configured to depict the current system operational status through a hierarchical system of graphical schematic displays. These displays shall revolve around a water treatment plant overview screen with labels of each process area or graphic screen that can be accessed from the overview screen. Touching a process area or label shall open the corresponding process area screen. The process area screens

shall contain a graphical representation of the process selected. The graphical representation can be similar to what is indicated on the P&ID Drawings or in another format acceptable to the Engineer. The I&C CONTRACTOR is encouraged to use his/her imagination to add quality to the graphic displays. Each process area shall be divided into smaller process units with a separate screen created for each process unit if necessary to properly display all information. Each I/O point shown on the P&ID drawings shall be shown on at least one process screen.

C. Each process display shall have symbols and indicators necessary to show all the detail data associated with that piece of equipment. Detail data displayed shall be as indicated on the P&ID Drawings or as described herein.

D. The date and time shall be displayed on each operator interface screen.

E. Equipment RUN indication shall be displayed in green. An elapsed time meter shall be provided for all motors and shall be displayed on the screen next to each motor. The elapsed time meters shall be adjustable by double-clicking on it to bring up a box that can be edited. When a motor or piece of equipment is OFF and not in alarm, it shall be displayed in gray.

F. Alarms shall remain hidden until they become active which will turn the component dark and flash until acknowledged. When the alarm has been acknowledged, the component at fault will stop flashing but remain dark until the alarm condition has been corrected. When an alarm condition occurs, an alarm box shall appear on every screen notifying the operator of an alarm condition. Once the alarm condition has been acknowledged, the alarm box shall disappear. A separate alarm screen shall be provided to indicate the alarm description along with the date and time of the alarm. A graphical pushbutton control station shall be provided on the operator interface for alarm acknowledgement. When the “alarm acknowledge” pushbutton is touched, the alarm displayed shall stop flashing and the alarm screen shall indicate the time and date the alarm was acknowledged.

G. Control features from the operator interface such as Start, Stop or Reset shall have the appearance of an actual pushbutton control station. For example, when a Reset button is touched on the operator interface screen, the button shall take on the appearance of being depressed.

H. A report screen shall be generated that indicates the elapsed time for all motors on this project. The elapsed time for each motor shall continue to increment whenever a run signal from the motor is received. The value on the report screen shall reflect the value indicated on the graphic screens. The elapsed time report screen shall be printable through the printer port.

3.02 ALARMS

A. Alarms will be categorized into three alarm levels as follows:
   1. Level 3 alarms will be displayed on the operator interface. The alarm will remain displayed on each operator interface until the operator acknowledges and resets the alarm at the operator interface.
   2. Level 2 alarms will also be displayed on the operator interface, but will activate an external alarm horn & beacon after a 10-minute time delay. The alarm will remain activated until the operator acknowledges and resets the alarm at an operator interface.
   3. Level 1 alarms will be displayed on the operator interface, activate the external alarm horn/beacon, after 10 minutes and initiate an auto dialer to call offsite operators. The alarm will remain activated until the operator acknowledges and resets the alarm at an operator interface. The auto dialer can be reset from a touch-tone telephone.

3.03 PLC PROGRAMMING & CONFIGURATION

A. Controls and monitoring for the WWTP will consist of the following main components:
   1. SBR PLC
   2. Drying Bed Lift Station Control Panel
   3. Overflow Lift Station Control Panel
   4. Headworks Control Panel
   5. Dewatering Control Panel

B. These components will be networked to allow both local and remote control of automated processes. The local control panels will allow the operator to control only the specific local process, including process monitoring, set point adjustments, and alarm acknowledgements.

C. General System Description: Wastewater is delivered to the WWTP inlet through a 12-inch sewer main and 48-inch metering manhole. Influent from the metering manhole is moved by gravity through the headworks and screening equipment. Headworks is comprised of 1+1 climber-type bar screens. After screening, influent is deposited in either Aeration Basin 1 or Aeration Basin 2 for secondary treatment. The two treatment basins will fill and treat alternately such that while one basin is treating, the other is filling. The treatment cycle for the Aerations basins are comprised of Anoxic Fill, React Fill, React, Settle. After the settling period, treated supernatant will be decanted using a floating mechanical decanter and transferred to the Post-EQ Surge Basin, where the effluent will be held before discharge into the chlorine contact channel. In the chlorine contact channel, effluent will be treated using a chlorine tablet feeder and de-chlorinated with a second tablet feeder prior to discharge into Bitter Creek. After decanting is complete, sludge will be wasted from the aeration basin and sent to dewatering process areas. Dewatering will be provided primarily by a sludge bagging system. The bagging system will be supplemented by two sludge drying beds as a backup method. Filtrate recovered from the dewatering areas will be directed to a lift station, located near the sludge drying beds, which returns the filtrate to the WWTP headworks. During high flow events, overflow from the process basins will also be delivered to the drying bed lift station. If the drying bed lift station reaches capacity, it will drain to three equalization basins located at the bottom of the ravine. The equalization basins discharge into a second, overflow lift station which returns overflow to the drying bed lift station after the high flow event ends.

D. SBR PLC: The SBR PLC will be the primary control panel for the SBR treatment system and will monitor other process areas throughout the plant. The SBR control panel will be provided and programmed by the SBR Manufacturer and at a minimum will provide the following:
   1. SBR treatment operation
   2. Monitors the flow into the SBR process area
   3. Monitors and controls the SBR headworks
   4. Monitors and the SBR treatment cycles
   5. Monitor water levels in the process basins
   6. Monitors drying bed and overflow lift stations
   7. Monitors Standby Generator
   8. Monitors flow rate to chlorine contact channel

Alarms

a. SBR Alarm Conditions (Per SBR Manufacturer)
b. Sludge Pump Fail
c. Mixer Fail
d. Influent Valve Fail
e. Decant Valve Fail
f. Post-EQ Valve Fail
g. Blower System Alarm

Control and Monitor Display at SBR PLC:

a. SBR Phases: Fill, React, Settle, Decant
b. Influent Control Valves (Open/Close) (Manual/Auto)
c. Submersible Mixers (On/Off/Auto)
d. Decanters (On/Off)
e. Decanter Discharge Valves (Open/Close) (Manual/Auto)
f. Sludge Pumps (On/Off/Auto)
g. SBR Level – 0-14.5 feet
h. Blower (In/Out of Service)
i. Blower Operation (Manual, DO, Speed)
j. Blower Filter Differential Pressure – 0-1 psi
k. Blower Inlet/Outlet Temperature
l. Blower Speed – 0-100,000 RPM
m. Blower Air Flow – 0-1,000 SCFM
n. Blower Run Time
o. Blower Operating Mode (Current—Flow—RPM—Pressure—DO)

Signals to SBR PLC

a. Drying Bed Lift Station Alarms
b. Overflow Lift Station Alarms

E. Drying Bed Lift Station Control Panel: The lift station will return water to the head of the treatment plant. The system shall operate based on the water level in the lift station and shall control the start and stop of two (2) grinder pumps. The grinder pumps shall start and stop automatically based on the integral controls. The Drying Bed Lift Station Control Panel shall provide status monitoring back to the SBR Control Panel.

Setpoints for Drying Bed Lift Station Control Panel PLC:

a. Pump #1 ON High Alarm level – 4 feet
b. Pump #2 ON High High Alarm level – 5 feet
c. Pump #1 OFF Low Alarm Level – 1 foot
d. Pump #2 OFF Low Alarm Level – 4 foot
e. High Alarm level Discharge Pressure (adjustable set point 0-100 psi) – 75psi

Control and Monitor Display

a. Pump #1 On/Off/Auto (Lead/Lag/Standby)
b. Pump #2 On/Off/Auto (Lead/Lag/Standby)
c. Lift Station Water Level (ft)

Alarms

a. High Alarm Water Level
b. High High Alarm Water Level
c. High Alarm level Discharge Pressure
d. Pump Fail

F. Overflow Lift Station Control Panel: The overflow lift station will return water from the equalization basins to the Drying Bed Lift Station using a single grinder pump. The overflow lift station shall be manually operated by the Operator. The Overflow Lift Station Control Panel shall relay alarms to the SBR Control Panel to signal the Operator to manually start or stop the overflow lift station pumps. Automatic operation is not acceptable to prevent short-circuiting the Drying Bed Lift Station.

G. Generator: A new 125 KW standby diesel generator provides back-up power for the Water Filtration System. The CONTRACTOR shall verify and make the necessary electrical modifications required for the generator to run when the Automatic Transfer Switch senses a loss of prime power to the facility. The I&C INTEGRATOR shall program the FCP to exercise the generator once a week for an operator-input time interval (default 30 minutes). When sensing a loss of prime power, the FCP shall allow a time delay in the facility process programming for the generator to come on without initiating shutdown of the treatment process or equipment.

Control and Monitor Display at SBR Control Panel:

a. Generator (Running/ Off/ Auto) Applicable Sections of Division
b. Automatic Transfer Switch (Prime Power/ Emergency Power)

Alarms:

a. Low Fuel Alarm
b. Fail Alarm

END OF SECTION

SECTION 40 6653 – RADIO COMMUNICATION EQUIPMENT

PART 1 – GENERAL

1.01 THE REQUIREMENT

A. This section covers the furnishing and installation of radio communication equipment for receiving remote signal information for communication with the Supervisory Control and Data Acquisition (SCADA) system. This includes equipment that is common to the computer system and the field interface devices. The equipment shall consist of the following principal items, as indicated on the Drawings and as required to complete the system.
   1. Yagi Radio Antenna
   2. Radio
   3. Surge Protection
   4. Interconnecting Cables

1.02 SUBMITTALS

A. Submittals shall be furnished in accordance with Sections 01 3300 – Submittal Procedures.

1.03 OPERATION AND MAINTENANCE MANUAL

A. Provide six (6) hard copies plus one (1) electronic version in PDF format.

B. Operation and Maintenance Manual shall be furnished in accordance with these Specifications.

1.04 QUALITY ASSURANCE

A. Each manufacturer shall provide a 2-year warranty.

PART 2 – PRODUCTS

2.01 ACCEPTABLE MANUFACTURERS

A. Radio manufacturers shall be compatible with the existing WWTP's radio network and shall be MDS iNetII Ethernet Radio, or ENGINEER-approved equal.

B. Antenna manufacturers shall be Antenna Specialists, Laird, Kathrein Scala, or ENGINEER-approved equal.

C. Surge protector shall be Polyphaser IS-50NX Series, or ENGINEER-approved equal.

2.02 RADIO/ REPEATER

A. The radio unit shall meet the following:

(Table on next page)

Characteristic	Specification / Description
Frequency Range	902 – 928 MHz (FHSS/FCC DTS)
Modulation	2 level GFSK
Output Power	5 mW to 1 W
Receive Sensitivity	-108 dBm, at standard speed, $1x10^{-6}$ BER -104 dBm, at high speed, $1x10^{-6}$ BER
Range	40 miles LOS
Frequency Zones	16 zones, 7-8 channels per zone
Serial Interface	(2) RS232/RS422/RS485, programmable RJ-45 connectors

Ethernet Interface	802.3, IPv4, TCP, UDP, DHCP, ICMP, ARP, Multicast, TFTP, DNP3 over TCP (2) 802.3u, Fast Ethernet, RJ-45
Power	Transmit: Outdoor – 6.6 W Receive: 1.8W Idle: 0.8 W
Power Requirement Voltage	+6 VDC to +30 VDC
Temperature Range	-40^0C to 75^0C
Antenna Connector	Board Level: SMA, Female Enclosed: TNC, Male
Size	Board Level: 178x88x32 (mm), 227 g Enclosed: 173c97c36 (mm), 635 g

2.03 ANTENNAS

A. General
1. Antennas shall be provided at the sites listed in the contract drawings.
2. Antennas shall be selected for the specified frequency range and provided with all mounting hardware and grounding connections as required.
3. License frequency antennas shall be factory tuned for the specified frequency and center cut for dual frequency applications.

B. Yagi/ Omni Antenna (900 MHz)
1. The antenna shall be fabricated of fiberglass or anodized aluminum rod and seamless drawn pipe. The hardware and fastenings shall be 316 stainless steel. The coax feed and connector shall be sealed in a foam potting system to prevent moisture penetration and assure long service life in severe environmental conditions.
2. Antenna shall be installed at all remote site(s) as indicated in the Contract Documents.
3. Electrical

Frequency Range	890-960 MHz
Gain	6-12 dBi
Impedence	50 Ohm
Maximum Power Input	100 Watts (at 50 deg C)
VSWR	< 1.5:1 max (1.35:1 Typical)
Front-to-back Ratio	<20 dB
Polarization	Horizontal or Vertical

4. Mechanical

Connector	Integral N-Female
Weight	3 lb or less
Length (Yagi	24 in or less
Wind Survival Rating	150 mph
Operating Temperature	-40°C to +85°C (-40°F to +185°F)

2.04 TRANSIENT SURGE PROTECTOR

A. Coaxial Surge Protection: Lightning surge suppression shall be provided at each radio location. The protector shall be a general coverage bulkhead mount coaxial surge protection device with multi-strike capability. The surge protector shall meet the following:

Response Time	2.5 nanoseconds, maximum
Surge Current Test	(IEC 1000-4-5 8/20 us Waveform): 500 J.
VSWR	1.2 to 1, maximum
Insertion Loss	0.2 dB, maximum
Characteristic Impedance	50 Ohms
Mechanical	Type N female connector, bulkhead mount

2.05 TRANSMISSION LINES

A. Coaxial Jumper
   1. Manufactured coaxial jumpers shall be installed between the radio and panel coaxial surge protector.
   2. The jumper shall be factory assembled with the mating connectors attached and compatible with the radio and surge protector connection points.
   3. The coaxial connection cable length shall be coordinated to provide a strain free connection between the radio and surge protector.
   4. Jumper cable shall be ½", super-flexible.

B. Transmission cable
   1. Transmission cable shall be Commscope WBC series 900 Mhz from Hyperlink Technologies or ENGINEER-approved equal.
   2. Transmission cable shall be Low loss, super flexible non-kinking with a minimum bending radius of 2". Cable length shall be continuous between the surge protector and antenna without splicing or midpoint connection.
   3. Cable construction shall be weather tight and shall be constructed as follows:
      a. Copper/Aluminum Center Conductor
      b. Polyethylene Foam Dielectric
      c. Tinned Copper Outer Braid
      d. Aluminum Tape shield bonded to the dielectric
      e. Polyethylene Outer Jacket
      f. Cable shall be constructed with an inert flooding compound to provide a weather tight seal.

2.06 RF CONNECTORS

A. RF mating connectors shall be selected to match the connection requirements of the Antenna, Surge Arrestor and Radio Equipment for the specified frequency range.

B. Cable connectors shall be low loss connectors compatible with the supplied RF transmission cable.

C. Cable connectors shall match the equipment connection. Cable connection adapters shall not be utilized. Connectors shall be attached to the cable in accordance with the manufacturer's installation requirements.

2.07 ACCESSORIES

A. Provide mounting hardware, grounding kits, cable hangers and other materials per this and applicable specifications required to make a complete and operable radio antenna feed system.

PART 3 – EXECUTION

3.01 GENERAL INSTALLATION REQUIREMENTS.

A. General installation requirements shall be as described in the manufacturer's O&M manual.

B. Communications equipment shall be mounted as indicated on the Drawings.

C. A physical radio path study must be performed for system configuration parameters and for the sites indicated on the drawings. The results of that study must be available to the OWNER.

D. Surge suppressor shall be bulkhead mounted on the radio enclosures and shall be suitable for the sizes of cable required inside and outside the enclosures.

3.02 INSTALLATION AND START-UP

A. Perform Site Work and install Communications equipment as shown on Drawings. Install associated equipment including antenna mounts, cables, cable jumpers, connectors, and grounding systems.

B. Install antennas, associated transmission lines, conduit work and any ancillary antenna accessories per this and applicable specifications and as shown on the contract drawings.

C. Provide weather wrapping for all exposed cabling and connectors. Weather wrapping shall be Scotch 3M, cold shrink.

D. Antenna shall be firmly secured utilizing all necessary mounting brackets, clamps, bolts, screws, and adapters. Mounting hardware shall be heavy duty rigid stainless steel.

E. Antennas shall be aligned at each location to provide the maximum RSSI.

F. RF connectors shall be installed in accordance with the manufacturer's installation requirements.

3.03 FUNCTIONAL TESTING

A. Perform the following feed system test for each antenna and feed system installation:
   1. Perform a Time Domain Reflectometer (TDR) trace of the antenna and feed system in their installed configuration from the radio port to the antenna at the frequency of operation. For UHF and VHF antennas, use the frequency shown on the drawings. Setup the TDR to normalize the trace to the radio antenna port based on the type of cable used.
   2. Correct components with VSWR greater than the specified maximum.
   3. Correct transmission lines with discontinuities exceeding a VSWR of 1.2.

B. Perform the following transmitter tests (power output at antenna port) for the Licensed MAS Polling Remote, Licensed MAS Repeater and licensed MAS Remote radio installation:
   1. Measure and document transmitter power output.
   2. Label radio with transmit power output.

3. Measure receiving signal strength at repeater for each station.

C. Perform the following adjustments and tests for the Licensed MAS Remote radios:
   1. Align remote site antennas for maximum receive signal level.
   2. Record receiving signal level for the radio and repeater location.
   3. Notify City personnel if receive signal level is below -95 dBm.

D. Perform the following diagnostic tests for each radio installation:
   1. Set the radio for diagnostic loop back mode.
   2. Perform loop back diagnostics using the Cities diagnostic software provided.
   3. Replace any radio that does not meet the manufacturer's specifications.
   4. Print final test record from diagnostic software.

E. Submit test records for each radio station installation including the following information:
   1. Site name.
   2. Test date.
   3. Name of person performing test.
   4. Test equipment model number, serial number, and calibration date.
   5. TDR traces labeled with the antenna identifier as shown on the drawings.
   6. Transmit power.
   7. Reflected Power.
   8. VSWR
   9. Receive signal level at station and repeater location.
   10. Final test record from diagnostic software.
   11. Radio Configuration: Review radio configuration for agreement with manufacturer's recommendations.

3.04 PREPARATION

A. Ensure spare parts and consumables are available to complete the Site Acceptance Test.

B. Provide Radio Commissioning Binder.

3.05 GROUNDING ROD INSTALLATION

A. Where rock bottom is encountered, drive ground rod at an oblique angle not to exceed 45 degrees from the vertical or bury in a trench at least 2½ feet deep.

B. Ensure that any single ground rod having a resistance to ground of greater than 15 ohms is augmented with one additional rod. Where multiple ground rods are required, ensure they are at least 6 feet apart.

C. Attach main ground conductor to ground rod with exothermic welding, listed pressure connectors, or listed clamps.

END OF SECTION

SECTION 40 6700 – LOCAL CONTROL PANELS

PART 1 – GENERAL

1.01 REQUIREMENT

A. The CONTRACTOR shall furnish all tools, equipment, materials, and supplies, and shall perform all labor as required for installing Local Control Panel (LCP's) as indicated on the Drawings and as specified herein or in other Sections of the Specifications.

B. The following is a list of LCP's to be furnished under this Contract which are required to meet these specifications:
   1. SBR Control Panel (Furnished by SBR System Manufacturer and installed by CONTRACTOR).
   2. Headworks Control Panel (Furnished and installed by CONTRACTOR).
   3. Sludge Bagging System Control Panel (Furnished and installed by CONTRACTOR).
   4. Drying Bed Lift Station Control Panel (Furnished and installed by CONTRACTOR).
   5. Overflow Lift Station Control Panel (Furnished and installed by CONTRACTOR).

C. All LCP panels shall be designed and constructed to the following minimum standards using the following PLC / HMI platforms:
   1. Allan Bradley – Compact Logics L43 or approved equal
   2. I/O Modules with minimum 15% open I/O
   3. 12” Color Panel View Human Machine Interface (HMI) Terminal w/ 120VAC Power Supply
   4. N-tron Industrial 5-port PoE Ethernet Switch – Model 105TX-POE
   5. Redundant 24 VDC Power Supplies for Field Instrumentation
   6. Sealed, mechanical cabinet cooling, if required, to maintain interior panel ambient temperatures below equipment stated operating conditions.
   7. All inputs such as instruments, sensors, and interfaces (switches, buttons, etc.) shall use 24 VDC
   8. All external inputs shall be individually fused with blown-fuse indicators
   9. All analog inputs shall be provided with loop isolation
   10. All outputs shall be isolated with interposing relays with integrated indication lights and manual override buttons
   11. All external connections into or out of the panel shall be made using UL listed terminal blocks
   12. All spare I/O shall be wired out to terminal blocks
   13. 30mm manual switches, buttons and lights shall be provided for each motor, gate or operator local to each machine.
   14. Panels shall be UL508 listed.

1.02 RELATED WORK AND CONSTRUCTION STANDARDS

A. Each LCP shall be a UL 508A recognized panel assembler. All control panel components shall be UL Listed under the category "Industrial Control Equipment".

1.03 SUBMITTALS

A. Submittals shall be furnished in accordance with Section 01 3300 – Submittal Procedures.

1.04 OPERATING AND MAINTENANCE MANUALS

A. Installation requirements and procedures.

B. Complete instructions regarding the operation and maintenance of equipment involved. Instructions and documentation not related to the equipment furnished must be removed

or crossed out. O&M manuals must be individually tailored to the project and equipment as furnished

C. Bill of Materials, component data sheets, descriptive literature, product specification sheets, wiring diagrams and calibration procedures. O&M manuals must be individually tailored to the project and equipment as furnished

D. Complete nomenclature of replaceable parts, part numbers, current cost, name, and address of nearest vendor of replacement parts. Information on equipment or components not related to equipment furnished must be removed or crossed out. O&M manuals must be individually tailored to the project and equipment as furnished

1.05 QUALITY ASSURANCE

A. Equipment to be furnished under this Section shall be the product of firms regularly engaged in the design and manufacture of this type of equipment. Manufacturer shall assume responsibility for, and guarantee performance of equipment furnished.

B. The manufacturer shall provide a 1-year equipment warranty.

C. Equipment shall be designed and installed to conform to Drawings, Specifications, engineering data, related equipment furnished by other suppliers and recommendations of the PLC manufacturer.

D. Comply with the following Codes and Standards:
1. NEMA (Testing Standards BU 1.3.03 or 1.304)
2. UL listing and labeling for materials.
3. NFPA-70
4. UL 508A

PART 2 – PRODUCTS

2.01 GENERAL

A. The CONTRACTOR shall furnish the LCP(s) to satisfy the functional requirements specified in the relevant mechanical equipment, these Specifications, and as indicated on the Drawings. All components shall be UL labeled or provided with proper ground fault protection as required by UL 508A.

B. LCP enclosures shall be 304 or 316 stainless steel NEMA 4X with hinged lockable doors. Freestanding enclosures shall have a 3-point latching handle. Outdoor enclosures with panel mounted devices shall contain a white interior swing panel.

C. Identification of panel-mounted devices, conductors, and electrical components shall meet the requirements specified herein.

2.02 TERMINAL BLOCKS

A. Each LCP shall be provided with identified terminal strips for the connection of all external conductors. There shall be sufficient terminal blocks for all external connections plus an additional 25 percent spare for future use. Terminal blocks shall be identified in accordance with approved shop drawings. Terminal blocks shall be individual, stacking, compression type, 600VAC, 30A minimum, suitable for wire sizes No. 10 - No. 18. A printed terminal block label shall be affixed to each terminal block for identification.

B. Each field-mounted device deriving power from the LCP shall be individually fused with a knife-blade or plug-in fused terminal block and blown fuse indicator.

C. Terminal blocks for analog signals shall include an indicator light that is illuminated when the signal is present. A grounding type terminal block shall be provided for termination of the analog signal cable shield/drain wire.

2.03 OPERATOR DEVICES

A. Pushbuttons, selector switches, and pilot lights shall be of the heavy-duty, oil-tight type, 30mm in size. Miniature style devices are not acceptable.

B. Pilot lights shall be push-to-test, LED style with LED and lens color as indicated on the Drawings.

C. START buttons shall have green cap and STOP buttons shall have red caps. All other button caps and selector switch operator handles shall be black.

D. Selector switches shall have the number of positions as indicated on the Drawings or as required to perform the intended function. Provide the number of 120VAC, 10A contacts as indicated on the Drawings or as required to perform the intended function.

E. Provide an engraved legend plate or provide laminated plastic nameplates as specified elsewhere for each device.

F. The operator devices shall have a NEMA rating equal to or more stringent than the control panel in which it is mounted.

G. Acceptable manufacturers:
   1. Cutler-Hammer 10250 series
   2. Square D 9001SK series
   3. Or ENGINEER-approved equal.

2.04 CONTROL RELAYS

A. Relays shall be DPDT (minimum) plug-in type utilizing rectangular blades with an indicating LED, and sockets with screw-type terminals and hold-down clips. Operating coil voltage shall be as required or indicated on the Drawings.

B. Contacts shall be rated 10 Amps at 120 VAC. Contact material shall be silver-cadmium oxide except for signal switching circuits that shall be gold plated or other noble metal.

C. Acceptable manufacturers
   1. Square D Type K,
   2. IDEC Type RH,
   3. Or ENGINEER-approved equal

2.05 TIMING RELAYS

A. Time delay relays shall be a combination on-delay and off-delay (selectable) with adjustable timing range from 1 sec to 10 hours. The timing relays shall include an LED indicator that is illuminated when the relay is timing out. Operating coil voltage rating shall be as indicated on the Drawings with DPDT, 120VAC, 10 amp rated contracts. Provide sockets with screw-type terminals and hold-down clips.

B. Reset Timers: Reset timers shall be synchronous motor driven with a solenoid-operated clutch. The timing relays shall include an LED indicator that is illuminated when the relay is timing out. Voltage rating shall be as indicated on the Drawings with 120VAC, 10 amp rated contacts, and timing range as required or indicated on the Drawings.

C. Acceptable manufacturers:
   1. ATC
   2. DEC
   3. Or ENGINEER-approved equal

2.06 SIGNAL CONDITIONERS

A. Current-to-current converter/isolators shall be 4-20 mA input, 4-20 mA output. The INTEGRATION CONTRACTOR shall utilize signal isolators where necessary to boost or isolate signals for proper operation.

B. Pulse-to-current converters shall convert a square wave pulsed frequency to a proportional 4-20mA output and shall operate on 120 VAC.

C. Acceptable manufacturers:
   1. Moore Industries
   2. AGM
   3. Or ENGINEER-approved equal

2.07 POWER SUPPLIES

A. Power supplies shall be DIN-rail mounted and be of the solid-state circuitry type UL-1950 and CSA-1402C certified. Input power shall be 120VAC, +/- 10%, output voltage shall be as indicated on the Drawings or as required for proper operation of connected loads.

B. Power supplies shall be sized for 200% of the total connected load.

C. Line regulation shall be within +/- 0.05 percent with a 10 percent line change. Load regulation shall be within +/- 0.05 percent with a 50 percent load change. Output ripple shall not exceed 0.2 percent peak-to-peak: Transient response shall be less than 50 microseconds for a 50 percent load change.

D. Power supplies shall be fully rated with an efficiency of at least 60 percent for a temperature range of 0 - 60°C or be oversized appropriately. Power supplies shall produce EMI/RR noise levels within the requirements of FCC Docket 20780.

E. Power supplies shall contain internal short circuit and overload protection. Output fusing shall be supplied on the positive terminal.

F. Acceptable manufacturers:
   1. Acopian
   2. Sola
   3. IDEC
   4. Phoenix Contact
   5. Or ENGINEER-approved equal

2.08 UNINTERRUPTIBLE POWER SUPPLY (UPS)

A. The UPS shall be on-line, with automatic bypass switching upon failure, and with automatic bypass switching for maintenance. The UPS shall include built-in surge protection, rectifier/battery charger, batteries, inverter, static transfer switch, and solid-state controls to provide a true sine-wave output.

B. Input power 120VAC, +/-10%, 60Hz.

C. Output power shall be 120VAC +/- 5% 60Hz with a harmonic distribution at less than 5% (voltage).

D. UPS KVA ratings have been indicated on the Drawings for bidding purposes only. Actual KVA rating of each UPS shall be as required to operate all loads being served for a minimum of 20 minutes without input power. KVA in-rush rating shall not be less than 150% of connected load's in-rush current. UPS load calculations must be submitted with the UPS for approval.

E. Switching response time shall be less than 4 milliseconds.

F. Batteries shall be sealed, no maintenance type, designed for 5 years minimum service.

G. Display shall include: On-line or bypass operation, input power failure, UPS fault, UPS battery low.

H. Where indicated, the UPS shall be provided with dry contacts that close upon low battery alarm.

I. The UPS manufacture shall provide 1-year parts and labor warranty.

J. Acceptable manufacturers:
   1. APC
   2. Best
   3. Or ENGINEER-approved equal

2.09 SPARE PARTS

A. Provide a minimum of 10 spare lamps.

B. Provide one control and one timing relay of each type utilized.

C. Provide one spare power supply of each size and type utilized.

D. Provide (3) spare fuses of each size and type utilized.

E. Refer to related Specification Sections for additional spare parts required.

PART 3 – EXECUTION

3.01 FABRICATION

A. LCP's shall contain components as indicated on the Drawings. The division of I/O between LCPs shall be provided per the Process and Instrumentation Diagrams (P&IDs).

B. All front accessible panel-mounted devices shall be mounted a minimum of 42 inches above finished floor elevation.

C. Where AC and DC signals must intercept each other, cross wires at 90-degree angles. Route AC and DC signals in separate wireways. Provide blank wireways for field wiring by the CONTRACTOR.

D. All internal wiring shall be contained in plastic raceways or troughs having removable covers. Wiring to door-mounted devices shall be extra flexible and anchored to doors using wire anchors cemented in place. Exposed terminals of door-mounted devices shall be guarded to prevent accidental contact with energized terminals.

E. Minimum control panel conductor size for power shall be No.12 AWG. Minimum conductor size for control wiring shall be No. 14 unless protected by a 10A overcurrent protective device or smaller, in which case it can be No.16 AWG (in PLC and operator interface cabinets only). Analog signal cables shall be 600V, No.16 AWG twisted shielded pair.

F. Wire markers shall be heat shrinkable, be a minimum of 3/8-inches in length and placed as near as possible to the end of the wire.

G. Identification of panel-mounted devices control equipment enclosure shall be engraved laminated plastic with black letters on white background. Use minimum 3/16-inch letters for identifying individual panel components. Use minimum 3/8-inch letters for identifying control equipment enclosure.

H. LCP enclosure doors that contain 120VAC devices shall be bonded to the enclosure grounding lug.

I. Each PLC I/O point connected to an external device shall be terminated at terminal blocks.

J. All analog signals shall be individually fused at the terminal block. See additional requirements as specified elsewhere in these specifications.

3.02 INSTALLATION

A. LCP(s) shall be installed as indicated on the drawings.

B. All front accessible panel-mounted devices shall be mounted a minimum of 42-inches above finished floor elevation.

C. LCP(s) shall be stored in an indoor, dry location at the jobsite to protect from condensation, damage, and the effects of weather.

D. LCP(s) interiors and exteriors shall be cleaned, and coatings shall be touched up to match original finish upon completion of the work.

END OF SECTION

SECTION 40 7000 – FIELD INSTRUMENTATION

PART 1 - GENERAL

1.01 REQUIREMENT

A. This Section includes the general requirements for furnishing and installing the field instruments as indicated on the Drawings and specified in this Division of these specifications. Other instrumentation and control sections of this Division shall supplement this Section as necessary. These specifications shall not apply to instrumentation to be provided by process equipment vendors as part of the process systems or equipment already approved by the ENGINEER.

B. The field instrument schedule is attached to the end of this Specification Section but shall not be construed as a Bill of Materials or as a complete listing of all required devices. The I&C INTEGRATOR shall be responsible for all field instruments indicated in these Specifications and the Contract Documents.

C. The I&C INTEGRATOR shall provide all labor, materials, and incidentals as indicated, specified, and required to furnish, install, calibrate, adjust, test, document, start-up, and train for each field instrument furnished.

D. Labor, materials, apparatus, and components essential to the complete functioning of field instruments described and indicated herein, or which may be reasonably implied as essential, whether mentioned in the Contract Documents or not, shall be furnished and installed by the I&C INTEGRATOR. In case of doubt as to the work intended, or in the event of need for explanation thereof, the I&C INTEGRATOR shall refer to the ENGINEER for supplemental instructions.

E. For purposes of clarity and legibility, the Drawings are diagrammatic only. Construction Documents are not intended to show every fitting, junction, or component nor every difficulty that may be encountered during installation or coordination with different equipment manufacturers. The I&C INTEGRATOR shall refer to related data in all Contract Documents and shall verify this information on site.

1.02 SUBMITTALS

A. Submittals shall be furnished in accordance with Section 01 3300 – Submittal Procedures.
   1. Descriptive Data: Submit copies of complete descriptive literature, performance data, physical dimensions, power, and signal connections for each field instrument to be furnished. Provide name of manufacturer, style, and complete model number. Listing items "as specified" without both make and model or type designation is not acceptable.
   2. Component Data Sheets: Submit a component data sheet for each piece of instrumentation equipment similar to an ISA S20 form. Include equipment tag number, manufacturer's model number, location of service, materials of construction, size and scale range, calibrated range, set points, optional accessories, and any other useful information.
   3. Submit drawings and bill of materials for any sun shields that may be required. Drawings must clearly indicate how the sun shield will be fabricated and mounted.

1.03 OPERATING AND MAINTENANCE MANUALS

A. Installation requirements and procedures.

B. Complete instructions regarding the operation and maintenance of equipment involved. Instructions and documentation not related to the equipment furnished must be removed or crossed out. O&M manuals must be individually tailored to the project and equipment as furnished.

C. Bill of Materials, component data sheets, descriptive literature, product specification sheets, wiring diagrams and calibration procedures. O&M manuals must be individually tailored to the project and equipment as furnished.

D. Complete nomenclature of replaceable parts, part numbers, current cost, name and address of nearest vendor of replacement parts. Information on equipment or components not related to equipment furnished must be removed or crossed out. O&M manuals must be individually tailored to the project and equipment as furnished

E. Provide a copy of all instrument calibration reports.

F. Refer to Applicable Sections of Division 40 – Process Integration for additional requirements.

1.04 QUALITY ASSURANCE

A. Equipment to be furnished under this section shall be the product of firms regularly engaged in the design and manufacture of this type of equipment. Manufacturer shall assume responsibility for, and guarantee performance of equipment furnished. However, this shall not be construed as relieving the I&C INTEGRATOR from responsibility for the proper installation and functioning of the work.

B. The manufacturer shall provide a 2-year equipment warranty.

1.05 COORDINATION

A. The I&C INTEGRATOR shall coordinate with all other equipment manufacturer to ensure proper installation and operation of the field instruments.

B. The I&C INTEGRATOR shall coordinate with all other trades to avoid conflicts and interferences. No extra compensation will be allowed for changes made necessary due to conflicts between various equipment.

C. Any discrepancies noted in these contract documents or discrepancies between Drawings and actual field conditions shall be promptly brought to the ENGINEER for a decision. No extra compensation will be allowed for changes made by the I&C INTEGRATOR without ENGINEERs consent.

D. IDENTIFICATION TAGS (To be provided by Contractor, as per these Specifications.)

PART 2 - PRODUCTS

2.01 PROVIDE INSTRUMENTATION AS NOTED ON THE EQUIPMENT LIST.

2.02 MAGNETIC FLOWMETERS

A. General:

1. Magnetic flowmeters systems shall be of the low frequency electromagnetic induction type and produce a DC pulsed signal directly proportional to and linear with the liquid flow rate. Complete zero stability shall be an inherent characteristic of the flowmeter system. Each magnetic flowmeter system shall include a metering tube, signal cable, transmitter, and flowmeter grounding rings.
2. Flowmeter shall be for the appropriate type to measure water flow rate in water or wastewater as required by the Contract Documents.
3. Magnetic flowmeters and electronics shall be manufactured at facilities certified to the quality standards of ISO Standard 9001 - Quality Systems - Model for Quality Assurance in Design/Development, Production, Installation, and Servicing.
4. Flowmeters that are to be located on a submerged pipe shall be designed to operate in such conditions. Flowmeter display shall be located above water level and a connection cable of appropriate length shall be provided to allow connection to display location.

B. Metering Tube:
   1. Constructed of stainless steel with 150 lb. carbon or stainless steel ANSI B16.5 Class 150 flanged connection.
   2. Utilize a minimum of 2 bullet-nosed, self-cleaning electrodes.
   3. The liner shall be non-conductive and in conformance with the Manufacturer's recommended service.
   4. Electrodes constructed of materials that are in conformance with the Manufacturer's recommendation for the meter's intended service.
   5. Meter housing rated for accidental submergence.
   6. Two stainless steel grounding rings shall be furnished and installed in accordance with the manufacturer's bore and material recommendation for the meter's intended service. Installation shall be per flowmeter manufacturer's recommendations. Unless otherwise indicated, flowmeter grounding shall consist of a 3/4" x 10-foot copper clad ground rod bonded to the grounding rings with a No.6 bare copper conductor.

C. Transmitter: The transmitter shall be mounted on the flow-tube or remotely where indicated on the Drawings. The interconnecting cable shall be furnished by the flowmeter manufacturer of sufficient length to avoid splicing. Transmitters shall be housed in NEMA 4X enclosures suitable for mounting outdoors. The transmitter shall produce an electrically isolated 4-20mA DC output into a minimum load of 800 ohms linear to flow and a dry-contact, field adjustable, pulsed output for remote totalization.

D. Performance Requirements:
   1. Measuring Range: 0.33 to 33 ft/s
   2. Calibrated Range: 1.0 to 33 ft/s
   3. Time Constant: 0.01 to 100 seconds.
   4. Accuracy: ±0.2 percent of flow rate from 10 to 100 percent of full range over 1 ft. per second at 0 x D inlet run.
   5. Repeatability: 0.1 percent of full scale.
   6. Isolation: either galvanic or optic
   7. Empty pipe detection: The flow transmitter shall display "Empty Pipe" when the metering tube is not completely full.
   8. Power consumption: 30 watts max
   9. Power supply: 85 to 260 VAC
   10. Communication Protocol: Modbus RS-485, Ethernet

E. Factory Testing: Each flowmeter shall be hydraulically calibrated at a facility that is traceable to the National Institute of Testing Standards using a 3-point (minimum) test. The calibrations procedures shall conform to the requirements of MIL-STD-45662A. A real-time computer-generated printout of the actual calibration data indicated apparent and actual flows for each flow test shall be submitted to the ENGINEER with final project documentation.

F. Acceptable Manufactures:
   1. Endress + Hauser Model Promag 53W,
   2. Toshiba
   3. or ENGINEER-approved equal

2.03 LEVEL TRANSDUCER

A. Signal Output
   1. 4-20 MADC 2 wire twisted pair grounded shield cable @ 0.042 ohm/ft
   2. FM and CSA explosion-proof and intrinsically safe
   3. Unit meets EMI/RFI for Mil-Std 461/462 Rev. E
   4. Response time: <5ms

B. Accuracy
   1. Static Accuracy: 0.25% FSO BFSL
   2. 1-year Stability: 0.20% FSO
   3. Error Band: 0.90% BFSL FSO

C. Temperature
   1. Temp. Compensation: +35°F to +125°F
   2. Operating temp.: -20°F to +190°F
   3. Storage temp: -65°F to +250°F

D. Electrical Connection and Protection
   1. Vented, watertight, polyurethane-jacketed cable, 40 feet standard
   2. 10-30 VDC unregulated power
   3. Unit is FM explosion-proof and FM intrinsic safe.

E. Material
   1. Wetted Parts: 316 Stainless Steel Inconel Sensor
   2. Body: 300 Stainless Steel, explosion-resistant
   3. Cable: Polyurethane-jacketed cable
   4. Cable: 40 feet standard

F. Agency Approval Options
   1. Explosion-proof rated Class I, II, III, Division I, Groups A, B, C, D, E, F, G.

G. Ranges
   1. 50 psi or per plan

H. Acceptable Manufacturers:
   1. E&H FMX-21
   2. Or ENGINEER-approved equal

2.04 LEVEL FLOATS

A. Float switches shall be used to sense liquid level in a tank, basin or other applications as indicated on the Drawings. Floats shall be mechanical activated switch contact, rated for 10A @240V for mechanical pump duty or 5A @ 240V for control duty. The float ball shall be constructed of 316 stainless steel or durable polypropylene material construction with solid polyurethane foam interior. It shall be leak proof, shock proof, and impact resistant. Switch shall be non-mercury type.

B. The switch contact configuration shall be normally open (N.O.) or normally closed (N.C.) as required to perform the proper operation as intended in these Contract documents. Actuation point shall be 1” above or below the horizontal. Power chord shall be chlorinated polyethylene material. Cord weight shall be zinc plated cast iron – 1.22 lb minimum with split-weight design for ease of adjustment.

C. Floats shall be installed such that the switch activation takes place at the liquid level as indicated or directed by the ENGINEER at time of construction. The float switch assembly shall include 1" schedule 80 PVC fastened to the tank/basin wall with 316 stainless steel anchors and clamps if required to secure the float(s) into place or as indicated on the Drawings. Float switch cables shall be secured to the cable or PVC pipe with weather-resistant, UV rated tie-wraps.

D. Acceptable Manufacturers:
   1. Connery
   2. Or ENGINEER-approved equal

2.05 PRESSURE GAUGES

A. Pressure gages shall have the following features as a minimum:
   1. Housing: 4-1/2", aluminum case with plastic lens, white dial and black numbers/graduations/pointer
   2. Silicone oil filled
   3. Range: as indicated elsewhere
   4. Proof pressure: 150 percent of range psi minimum
   5. Accuracy: one percent of full scale
   6. Wetted material: 316 stainless steel
   7. Dial/pointer: stainless steel or aluminum
   8. Service: liquid, gas, or vapors as indicated on the Drawings
   9. Process connection: 1/4" NPT male
   10. Calibration: micro-adjustment screw
   11. Accessories: test cock, female outlets, and an isolation ball valve

B. An isolation ball valve shall be furnished and installed on each pressure gauge for ease of removal without disruption of service. The valve shall be sized as required for the process connection.

C. A diaphragm seal shall be furnished and installed to isolate each pressure gauge installed with a process connection other than potable water or clean air.

D. The I&C CONTRACTOR shall furnish and install all mounting hardware and support structures necessary for proper operation in accordance with the manufacturer's recommendations and the Contract Documents. Materials used for support structures shall be suitable for the environment in which it is installed (corrosive - stainless steel, non-corrosive - galvanized steel; unless indicated otherwise).

E. Acceptable Manufacturers:
   1. US Gauge (Ametek)
   2. Ashcroft
   3. Winters
   4. Or ENGINEER-approved equal

2.06 PRESSURE TRANSMITTER

A. The pressure transmitter shall measure the pressure in the line and shall transmit a 4-20 mA output for process control. The unit shall have an LCD display for local readings.

B. Requirements
   1. Accuracy: ±1% down to 10:1
   2. Display: 4-character LCD
   3. Output: 4-20 mA
   4. Pressure: 200 psi
   5. Sensing Element: 316 SS diaphragm
   6. Wetted Material: 316 SS
   7. Process Connection: 1/4” NPT (F)
   8. Power: 12 – 45 VDC
   9. Enclosure: NEMA 4X

C. Acceptable Manufacturers:
   1. Rosemount
   2. Endress & Hauser
   3. Or ENGINEER-approved equal

PART 3 - EXECUTION

3.01 INSTALLATION

A. The I&C INTEGRATOR shall furnish and install all mounting hardware and support structures for the instrumentation and the logic unit as required for proper operation in accordance with the manufacturer's recommendations and the Contract Documents. Materials used for support structures shall be suitable for the environment in which it is installed (corrosive – PVC, Fiberglass or stainless steel, non-corrosive – stainless steel; unless indicated otherwise).

B. Inspect each instrument and piece of equipment for defects, damage, and correct operation before installation. Inspect work area and work involving other trades to verify readiness for installation.

C. Field instruments shall be installed per manufacturer's requirements. Verify that all mounting, process, and electrical connections are secure and tight before operating instrument.

D. Install field instrument identification tag as described above.

E. The I&C INTEGRATOR shall coordinate with the Mechanical I&C INTEGRATOR to verify process connection type and location.

F. Field instruments installed in hazardous (classified) locations shall be installed in approved enclosures or electrically connected through an intrinsically safe barrier and shall meet all other requirements of NFPA 70 Articles 500-503.

G. Furnish and install sun shields for all analog instruments installed outdoors in direct sunlight where recommended by the instrument manufacturer.

H. Additional installation supervision, calibration, testing, and start-up requirements are provided in these Specifications.

END OF SECTION

SECTION 41 2200 – CRANES AND HOISTS

PART 1 – GENERAL

1.01 THE REQUIREMENT

A. Provide permanent and/or portable lifting equipment and ancillary equipment as specified below.

1.02 SUBMITTALS

A. Submittals shall be furnished in accordance with Section 01 3300 – Submittal Procedures.

B. Submittal shall also include base dimensions, footing requirements, and footing reaction forces.

1.03 WORK INCLUDES THE FOLLOWING:

A. Detailed design of completed crane system, including bridge, end trucks, trolley, hoists, cabling, controls, and all appurtenances specified hereinafter.

B. Shop drawings

C. Fabrication of a complete crane

D. Inspection and shop testing

1.04 REFERENCES

A. Equipment furnished under this section shall comply in all respects with the requirements of the following standards:

OSHA	Occupational Safety and Health Administration
CMAA	Crane Manufacturer's Association of America
HMI	Hoist Manufacturer's Institute
ANSI	American National Standards Institute
NEMA	National Electric Manufacturer's Association
NEC	National Electric Code
AWS	AWS D14.1 Specification for Welding Cranes

1.05 QUALITY ASSURANCE

A. Contractor shall adhere to OSHA, state, and local safety guidelines, laws, rules, and regulations.

B. Contractor shall be licensed in the state of Arizona and have a minimum of 10 years' experience in the manufacture, fabrication, and installation of bridge cranes.

C. Contractor shall conform to all applicable ANSI, CMAA, and HMI specifications and/or standards.

D. Comply with CMAA specification 74 or 70, as applicable.

E. Long lead items [hoist, end trucks, drives and controls] will be ordered by contractor upon receipt of purchase order and credit approval. Steel will not be ordered until shop drawings and submittals have been approved by the customer.

F. All electric equipment shall be UL, CSA, or ETL labeled.

1.06 WARRANTIES

A. Provide one-year equipment warranty.

1.07 SERVICE AGREEMENT

A. Provide optional cost for two-year service agreement from local service organization.

PART 2 – PRODUCTS

2.02 DAVIT CRANE

A. Manufacturer: davit crane shall be Model Captain 2500 by Thern, Inc., or ENGINEER-approved equal.

B. The following design conditions are required for the crane:

Pump Stations and SBR Basin Davit Crane:

Lifting Capacity:	1,500 lbs. capacity at 122" reach
Hook Reach:	74” (shortest position), 122” (fully extended)
Winch Operation:	Manual
Boom Angle Adjustment:	Manual adjustment
Lift required:	30 Ft. (minimum)
Base Requirement:	Pedestal

C. Design Factor: yield design factor shall be a minimum of 1.5 under static conditions for all crane components including winch and base. Breaking strength safety factor shall be a minimum of 2.5 under static conditions. Comply with CMAA 70 or 74.

D. Hook Height: hook height shall be adjustable by moving the boom up or down between 5 degrees above horizontal and 45 degrees from vertical, with a minimum of 86 inches between the lowest position and the highest position with the boom fully extended.

E. Boom Angle: boom angle shall be adjustable at all times. Hand operated screw jack or ratchet-style screw jack shall be provided as required to raise or lower the boom between 5 degrees above horizontal and 45 degrees from vertical.

F. Boom Sheave: wire rope shall pass over a sheave at the end of the boom. Sheave shall have a bearing and shall be supported by a machined clevis pin which shall be keyed to the boom to keep the pin from rotating.

G. Clearance: minimum height of the boom shall be 36 inches between mounting surface and the underside of the boom in all base configurations.

H. Rotation: mast and boom shall rotate 360 degrees in the base, with a rotational handle attached to the mast to facilitate rotation. Crane shall include a bearing sleeve to support the mast at the top of the base.

I. Fastening Pins: crane components shall be fastened together using stainless steel clevis style pins, secured with lynch pins with lanyards fastening the lynch pins to primary structural components.

J. Portability: davit crane shall break down into portable components with no single component weighing more than 100 pounds. Carrying handles shall be welded to mast and boom.

K. Winch Location: lifting winches shall be located such that the center point of the drive shaft is behind the centerline of the mast.

L. Winch Mounting Bracket: crane shall be equipped with a winch mounting bracket that connects to the crane with a pin allowing the winch with bracket to be attached or removed without tools. Winch shall attach to the bracket using standard fasteners.

M. Nametag: davit crane shall be labeled with a non-corrosive metal identification plate labeled or imprinted with the manufacturer’s name, model number, serial number, capacity rating, and other essential information.

N. Painting**:**

1. Crane shall be factory painted per manufacturer’s standards, with finish per Owner’s Selection.
2. Crane shall be shop cleaned, primed, and painted as defined in these Specifications. The following items shall not be painted: Cable/Wire Rope

PART 3 – EXECUTION

3.01 SERVICES OF MANUFACTURER

A. Inspection, Startup, and Field Adjustment: The hoist systems shall be assembled and tested per the manufacturer's instructions and requirements. The test shall be performed using a load equal to ¾ of the load rating of the system and shall be demonstrated to the satisfaction of the ENGINEER prior to acceptance.

END OF SECTION

SECTION 43 2513 – SUBMERSIBLE SEWERAGE PUMPS

PART 1 – GENERAL

1.01 THE REQUIREMENT

A. Furnish and install submersible pumps with associated piping and appurtenances, including pump base, SS guild rails, and supports complete and operable in accordance with the Contract Documents.

B. The Supplier shall examine the site conditions, intended application, and operation of the pump system and recommend the pump which will best satisfy the indicated requirements.

C. Coordinate with hatch manufacturer in accordance with these Specifications.

1.02 SUBMITTALS

A. Submittals shall be furnished in accordance with Sections 01 3300 – Submittal Procedures.

1.03 OPERATING AND MAINTENANCE MANUAL

A. Operation and Maintenance Manual shall be furnished in accordance with these Specifications.

1.04 QUALITY ASSURANCE

A. Pump manufacturer and model shall be as described on the Drawings or Engineer approved equal.

B. The manufacturer shall provide a 2-year equipment warranty.

C. Manufacture shall be required to provide a one-year clog-free guarantee, published in writing from the manufacturer prior to being selected for the project.

1.05 SPARE PARTS

A. Provide all spare parts anticipated to be required for the first 2 years of operation. Manufacturer shall clearly define quantity, description of part and associated part numbers as part of manufacturer's scope of supply.

B. Spare parts shall be placed in a separate container clearly marked as "Spare Parts." All parts shall be identified and clearly labeled with applicable part numbers.

PART 2 – PRODUCTS

2.01 GENERAL

A. Each pump shall be equipped with a submersible electric motor connected for operation on 460 volts, 3 phase, 60 Hz suitable for submersible pump applications.

B. The pumps shall be Grundfos, KSB, Sulzer, Flygt or ENGINEER-approved equal.

C. Operating Conditions**:** Capacity and Head requirements for each submersible pump shall be specified within the plans.

The WORK of this Section shall be suitable for operation under the following conditions:

Pump Name	Design Flow Capacity (gpm)	Total Dynamic Head Required (ft)	Rated HP	VFD Service	Type	Provided by
Drying Bed Drain Return Pumps	70	90	5	No	Submersible Non-Clog with Hard-Iron Impellers	Contractor

2.02 NON-CLOG TYPE

A. Pump Design: The pump shall be automatically and firmly connected to the discharge connection, guided by Sch 40 (316) stainless steel guide bars extending from the top of the station to the discharge connection. Intermediate guide rail bracket shall be provided as required by manufacturer or as shown on Plans. There shall be no need for personnel to enter the basins. Sealing of the pumping unit to the discharge connection shall be accomplished by a machined metal to metal watertight contact. Sealing of the discharge interface with a diaphragm, O-Ring, or profile gasket shall not be acceptable. No portion of the pump shall bear directly on the sump floor. It is preferable that the FEB Pumps be interchangeable with Influent Pumps for Owner redundancy and consolidation of spare parts; however, it is not required.

B. Pump Construction: Construction of the submersible non-clog pumps shall conform to the following requirements:

1. Major pump components shall be of gray cast iron, ASTM A48, Class 35B, with smooth surfaces devoid of blow holes or other irregularities. All exposed nuts or bolts shall be AISI type 316 stainless steel construction. All metal surfaces coming into contact with the pumpage, other than stainless steel or brass, shall be protected by a factory applied spray coating of acrylic dispersion zinc phosphate primer with a two-part epoxy paint finish on the exterior of the pump.
2. Sealing design shall incorporate metal-to-metal contact between machined surfaces. Critical mating surfaces where watertight sealing is required shall be machined and fitted with Nitrile or Viton rubber O-rings. Fittings will be the result of controlled compression of rubber O-rings in two planes and O-ring contact of four sides without the requirement of a specific torque limit.
3. Rectangular cross sectioned gaskets requiring specific torque limits to achieve compression shall not be considered as adequate or equal. No secondary sealing compounds, elliptical O-rings, grease, or other devices shall be used.

C. Cooling System: Each unit shall be provided with an adequately designed cooling system.

1. A stainless steel cooling jacket shall encircle the stator housing; thus, providing heat dissipation for the motor regardless of the type of installation. Impeller back vanes shall provide the necessary circulation of the cooling liquid through the water jacket. The cooling media channels and ports shall be non-clogging by virtue of their dimensions. External cooling and seal flushing shall not be required. Cooling system should be of the closed-loop. Media cooled water jackets will not be allowed.
2. The cooling system shall provide for continuous pump operation in liquid temperature of up to 104°F. Restrictions below this temperature are not acceptable.

D. Cable Entry Seal: The cable entry seal design shall not require specific torque requirements to insure a watertight and submersible seal. The cable entry shall consist of a single cylindrical elastomer grommet, flanked by washers, all having a close tolerance fit against the cable outside diameter and the entry inside diameter and compressed by the body containing a strain relief function, separate from the function of sealing the cable. The assembly shall provide ease of changing the cable when necessary using the same entry seal. The cable entry junction chamber and motor shall be separated by a terminal board, which shall isolate the interior from foreign material gaining access through the pump top. Epoxies, silicones, or other secondary sealing systems shall not be considered acceptable.

E. Motor**:**

1. The pump motor shall be induction type with a squirrel cage rotor, shell type design, housed in an air filled, watertight chamber, NEMA B type. The stator windings and stator leads shall be insulated with moisture resistant Class H insulation rated for 180°C using the trickle impregnation method to achieve a winding fill factor of at least 95%. The use of bolts, pins or other fastening devices requiring penetration of the stator housing is not acceptable. The motor shall be designed for continuous duty handling pumped media of (40°C) (104°F) and capable of up to 30 evenly spaced starts per hour. The rotor bars and short circuit rings shall be made of cast aluminum. The motor and pump shall be designed and assembled by the same manufacturer.
2. The power cable shall be sized according to the NEC and ICEA standards and shall be of sufficient length to reach the junction box without the need of any splices. The outer jacket of the cable shall be oil resistant chloroprene rubber. The motor and cable shall be capable of continuous submergence underwater without loss of watertight integrity to a depth of 25 feet.

F. Bearings: The pump shaft shall rotate on two or more permanently greased bearings. Motor bearings shall be permanently grease lubricated. The upper bearing shall be a single roller bearing. The lower bearing shall be a two row angular contact bearing to compensate for axial thrust and radial forces. Single row lower bearings are not acceptable. The minimum L10 bearing life shall be 50,000 hours at any usable portion of the pump curve.

G. Mechanical Seal:

1. Each pump shall be provided with a tandem mechanical shaft seal system consisting of two totally independent seal assemblies. The seals shall operate in a lubricant reservoir that hydrodynamically lubricates the lapped seal faces at a constant rate. The lower, primary seal unit, located between the pump and the lubricant chamber, shall contain one stationary and one rotating tungsten-carbide seal ring. The upper, secondary seal unit, located between the lubricant chamber and the motor housing, shall contain one stationary and one positively driven rotating corrosion resistant tungsten-carbide seal ring and one rotating tungsten-carbide seal ring. The rotating seal ring shall have small back-swept grooves laser inscribed upon its face to act as a pump as it rotates, returning any fluid that should enter the dry motor chamber back into the lubricant chamber. The seals shall require neither maintenance nor adjustment nor depend on direction of rotation for sealing. Shaft seals without positively driven rotating members or conventional double mechanical seals containing either a common single or double spring acting between the upper and lower seal faces are not acceptable.

2. Each pump shall be provided with a lubricant chamber for the shaft sealing system. The lubricant chamber shall be designed to prevent overfilling and to provide lubricant expansion capacity. The drain and inspection plug, with positive anti-leak seal shall be easily accessible from the outside. The seal system shall not rely upon the pumped media for lubrication. The motor shall be able to operate dry without damage while pumping under load.

H. Pump Shaft: Pump and motor shaft shall be the same unit. The pump shaft is an extension of the motor shaft. Couplings shall not be acceptable. The pump shaft shall be of stainless steel ASTM A479 S43100-T and shall be completely isolated from the pumped liquid. Maximum deflection shall not exceed 0.002" at the primary shaft seal. Shaft sleeves will not be acceptable.

I. Impeller: The impeller(s) shall be of gray cast iron, Class 40 or 35B, dynamically balanced, two vane non-clogging design having a long throughlet without acute turns. The impeller(s) shall be capable of handling fibrous materials, heavy sludge and other matter found in wastewater. Whenever possible, a full vaned, not vortex, impeller shall be used for maximum hydraulic efficiency; thus, reducing operating costs. Mass moment of inertia calculations shall be provided by the pump manufacturer upon request. Impeller(s) shall be keyed to the shaft and retained by a stainless steel bolt which must be mechanically prevented from loosening by a positively engaged ratcheting washer assembly. The backside of the impeller shall incorporate an active cutter system designed to protect the motor shaft and mechanical seal from stringy or fibrous solids. Back vanes on the impeller shall eject chopped solids to prevent them from entering the area around the seal.

1. Where required per the table above and due to high abrasive conditions, the impeller and associated insert ring shall be 25% chrome cast iron hardened to meet ASTM A532 (Alloy III A), dynamically balanced, semi-open, multi-vane, back swept, screw-shaped, non-clog design. The impeller leading edges shall be mechanically self-cleaned automatically upon each rotation as they pass across a spiral groove located on the volute suction. The leading edges of the impeller shall be hardened to Rc 60 and shall be capable of handling solids, fibrous materials, heavy sludge, and other matter normally found in wastewater. The screw shape of the impeller inlet shall provide an inducing effect for the handling of up to 5% sludge and rag-laden wastewater. The impeller to volute clearance shall be readily adjustable by the means of a single trim screw. The impeller shall be locked to the shaft, held by an impeller bolt, and shall be coated with alkyd resin primer. Coatings or other means of hardening impellers that are not integrally cast into the iron with 25% chrome iron will not be accepted.

J. Volute: Pump volute(s) shall be single-piece gray cast iron, Class 40 or 35B, non-concentric design with smooth passages large enough to pass any solids that may exit the impeller. The motor shall be attached to the volute by stainless steel bolts. The motor unit with impeller attached, shall be removable from the volute without requiring removal of the impeller and without disturbing the watertight integrity of the motor unit.

K. Flush Valve: Where required, the pump shall be equipped with a flush valve or device to flush and/or mix a pump sump automatically before discharge. The flush valve shall be mounted on the pump housing and is designed based on the ejector principle with a ball valve as the closing device. The operation is automatic and induced by the pump flow and pressure, thus eliminating the need for electrical components and cabling. A flush valve requiring the use of electricity or a timer for operation will not be accepted.

2.03 PROTECTION

A. A temperature monitor will be in each phase of the motor connected in series and set to open at 140°C. They shall be connected to the control panel and used in conjunction, and supplemental to, external motor overload protection.

B. An electrical probe leakage sensor shall be provided to detect the presence of water in the stator chamber. When activated, the relay will send an alarm to the local control panel and cause the pump to shut down (optional). The moisture sensing chamber shall have a drain/ inspection plug with a positive anti-leak seal which is easily accessible from the outside of the pump.

C. All submersible, non-clog pumps supplied for the work in this section shall be UL/FM approved for use in Class I, DIV-1 areas (Explosion-proof).

2.04 PUMP CONTROLS

A. Pumps shall be controlled in accordance with these Specifications.

PART 3 – EXECUTION

3.1 SERVICES OF MANUFACTURER

A. Inspection, Startup, and Field Adjustment: The service representative of the Manufacturer shall be present at the Site to furnish the field services required by these Specifications.

B. Services of manufacturer shall be in accordance with these Specifications.

C. Manufacturer shall define quantity of trips and days on site necessary to perform the specified services as a part of the manufacturer's scope of supply. Scope of supply shall be inclusive of travel and living expenses.

D. Upon completion of field services, representative of manufacturer shall prepare and submit a report in accordance with the requirements of these Specifications.

3.2 INSTALLATION

A. CONTRACTOR shall install the equipment in accordance with installation requirements of these Specifications.

END OF SECTION

SECTION 46 2111 – CLIMBER-TYPE BAR SCREENS

PART 1 – GENERAL

1.01 THE REQUIREMENT

A. The Manufacturer shall furnish a single packaged unit with two (2) fine bar screens, one (1) tank, one (1) control panel, one (1) rock trap, one (1) compactor-conveyor and one (1) set of related accessories required for fully automatic operation as indicated on the Drawings and as specified herein. The screens shall not become blinded by any of influent sewer debris or by Fats, Oil and Grease during operation. Screenings shall be continuously discharged by a mechanical scraper arm to the screw compactor located at grade. Entire screen and compactor maintenance shall be possible from grade. No ladders or platforms will be needed for any portion of the maintenance.

B. The Manufacturer shall certify to not less than five (5) years of experience in the application, design, construction, and operation of climber-type bar screens of the type specified in this Section. The Manufacturer shall produce a list of not less than ten (10) operating installations as evidence of meeting the experience requirement.

1.02 SUBMITTALS

A. Submittals shall be furnished in accordance with Section 01 3300 – Submittal Procedures.

1.03 OPERATION AND MAINTENANCE MANUALS

A. The Manufacturer shall provide Operation and Maintenance Manual hard copies and electronic version in PDF format for the Screens and all system components.

1.04 QUALITY ASSURANCE

A. Headworks screen shall be manufactured by Or-Tec Inc., EWS Inc., Franklin Miller, or ENGINEER-approved equal.

B. The Manufacturer shall provide a 2-year equipment warranty.

C. The climber-type bar screen specified herein shall be the design and fabrication of a single Manufacturer, which shall have the sole source responsibility for said equipment.

1.05 SPARE PARTS

A. Manufacturer shall provide all spare parts anticipated to be required for the first 2 years of operation. Manufacturer shall clearly define quantity and description of part and associated part numbers as part of Manufacturer’s scope of supply.

B. Spare parts shall be placed in a separate container clearly marked as “Spare Parts.” All parts shall be identified and clearly labeled with applicable part numbers.

PART 2 – PRODUCTS

2.01 GENERAL

A. Each bar screen shall consist of a tapered bar screen panel, two side frames, a drive motor, and two chains with multiple penetrating cushion mounted rakes. Both will be installed in a single tank and be provided with a separate rock trap and control panel.

B. Equipment shall be installed so as not to obstruct the flow of sewage to bar screen.

C. Screen components including shapes, pipes, sheets, side frames and guides, bar rack, rake assembly, scraper assembly, shafting, discharge chute, fasteners, and anchor bolts shall be manufactured from type 304 stainless steel. The screen shall be installed in type 304 stainless steel tank with inlet flange, outlet flange, overflow weir, and level sensor threaded fittings.

D. The tank overflow weir shall allow waste to flow directly to the outlet during overflow events.

E. A rock trap shall be mounted prior to the inlet of the screen tank.

F. Screen selection shall be based on the manufacturer's recommendation, to provide the best possible, most economical performance and mechanical solutions that meet or exceed specified application data:

Screen Opening:	¼"
Screen Angle:	75°
Peak Flow:	270,000 GPD
Wastewater:	Standard Municipal 200-500 mg/L TSS
Motor:	3Ø, 230/460Volt, 60hz

2.02 BAR SCREEN

A. Screen panel face shall consist of a parallel array of tapered bars with even, ¼" spacing between them. Screen bars shall be readily replaceable individually from the front of the screen without the need to remove the screen from the wastewater channel. All material for tapered bars, spacer beams, screenings lead plate, and support beams shall be of 304 stainless steel. The tapered bar screen panel shall be mounted and bolted between a pair of side frames.

B. The screen shall be a self-cleaning system using only the penetrating rake teeth to fully clean the gaps between the tapered bars and keep the screen operational.

C. No wash water shall be required by the screen.

D. The opening between the screen bars shall be able to be field modified to different size opening in the future with the use of a bar spacing kit.

2.03 SIDE FRAMES

A. A pair of side frames shall support the tapered bar screen panel between them. Bearings for head sprockets and bushings for tail sprockets with head and tail shafts shall be mounted on them. Frames shall be made of 304 stainless steel plate of sufficient thickness to prevent deflection.

2.04 CHAINS, RAKES, AND SPROCKETS

A. Rakes shall travel up the screen face, cleaning the screen opening with their penetrating teeth, while lifting captured solids to the top of the machine. The rakes shall be mounted on the chains on both sides of the side frames using cushion mounted brackets. The cushion mounted brackets shall enable the rakes to rotate 60-90° backwards should any blockage occur, and then return to their position between tapered bars.

B. The rakes shall travel approximately 12-15 feet/min. The rakes shall be chain mounted at no greater than 36" intervals.

C. Rake assembly shall be guided over the discharge chute and the accumulated debris shall be removed by a scraper attached to the side frames. Scraper shall be designed to pivot to achieve effected cleaning of bar screen openings with the rake. Rake scraper shall be of 304 stainless steel.

D. Discharge material from screen shall be directed to a tapered chute providing a smooth transition from bar screen discharge to the screw compactor. Chute shall have a minimum slope of 55° and shall be of 304 stainless steel.

E. Screen shall be capable of operating based on level sensor or I/O. Screen shall also be capable of operating continuously (24/7) when there is a continuous flow present if required.

2.05 DRIVE MOTORS

A. Equipment shall be provided complete with drive motors of totally enclosed geared induction type. A torque limiter combined with limit switch shall be provided between the motor and the head shaft in order to disconnect mechanical power in emergency situations.

B. System shall use two 1/6hp, 3Ø, 230/460Volt, 60hz motors, one per screen.

2.06 SCREEN TANK

A. The screen will be supplied with a stainless steel, structural tank which will support and contain the screen. The screen tank shall be self-emptying and fabricated from 11 gauge 304 stainless steel.

B. The two (2) screen inlets shall be a 6” flange and the one (1) screen outlet shall be 10” flanged.

C. The screen tank shall include an internal wall that is to act as an overflow weir as well as to allow screens to seal to the side, allowing no flow past the screens.

2.07 SCREW CONVEYOR COMPACTOR

A. The screening unit will be supplied with a screw compactor which will convey and dewatered the removed screenings. The drain pan and intermittent wash water shall drain to the screen inlet.

B. System shall use one 2hp, 3Ø, 230/460Volt, 60hz motor.

C. The Compactor shall be provided with a wash water supply connection for a maximum allowable 10 gpm sporadic usage.

D. Discharged screenings shall be of adequate dryness to pass the paint filter liquids test for landfill disposal.

2.08 LEVEL SENSORS

A. Four (4) level sensors shall be installed in the screen tank with the following functional parameters:
   1. High: Screen-On / High-High Alarm.
   2. Each side of the tank shall have two (2) sensors to control the accompanying screen.

2.09 ROCK TRAP

A. One (1) rock trap shall be supplied to be mounted at the inlet of the screen tank. The rock trap shall have a 6” inlet and 6” outlet flange. The rock trap shall be of 304 stainless steel and shall include a perforated 304 stainless steel basket.

B. The rock trap shall include a stainless-steel hinged cover and a support stand to bring outlet to level with the screen tank inlet.

2.10 CONTROL PANEL

A. The control panel shall be a NEMA 4X enclosures suitable for outdoor use and shall contain all electrical controls, wires, starters, terminals, relays, overloads, fuses, and labels required for operation of the screen and ancillary equipment described herein.

B. The system shall be fully operational in both manual and automatic modes. The system mode selector switch shall allow the operator to select the desired mode. No other changes or programming by the operator shall be required.

C. In manual mode, the screen will start and operate until it is turned off. In automatic mode, the system will turn on based on a signal from the level sensor provided or operate continuously if there is continuous flow to the screen. When using level sensors or I/O the screen will operate for one minute based on the signal. If at the end of one minute the signal from the level sensor is still made the screen will operate for one more minute. When the level sensor in no longer made the screen will turn off and wait for the next signal.

D. Timers in the panel will allow operator to easily change the on/off period of the compactor washer wash systems.

E. The front of the control panel door shall include a main disconnect breaker switch (power on/off). In the off position all power to the control panel shall be off. An electronic current overload relay overload shall continuously monitor the screen motor and shall alarm the panel in the event of an over current draw.

F. The control panel shall contain the following switches:
   1. NEMA 4X stainless steel outdoor duty enclosure housing.
   2. Main disconnect, "thru the door" with door interlock.
   3. Full voltage non-reversing motor starter (IEC).
   4. Control transformer with primary and secondary fusing.
   5. Control power on/reset push button.
   6. Screen running green pilot light.
   7. General Red Fault Alarm.
   8. Screen Hand/Off/Automatic Switch
   9. Electronic Over Current Relay.
   10. Elapsed time meter.
   11. Lot, control relays, terminal blocks, and related accessories.
   12. E-Stop mushroom red pushbutton with twist reset.
   13. UL Listed Enclosure suitable for wall mounting.
   14. Dry contact outputs for Screen Run, General Fault, Over Current.

G. All switches and switching functions shall be clearly indicated by suitably engraved labels.

PART 3 – EXECUTION

3.01 MANUFACTURER'S SERVICES

A. Inspection, Startup, and Field Adjustment: The service representative of the Manufacturer shall be present at the Site to furnish the field services required as specified herein.

B. Manufacturer shall define quantity of trips and days on site necessary to perform the specified services as a part of the Manufacturer's scope of supply. Scope of supply shall be inclusive of travel and living expenses.

C. Upon completion of field services, the representative of the Manufacturer shall prepare and submit a report in accordance with the requirements of these Specifications.

3.02 INSTALLATION

A. Contractor shall install the equipment in accordance with installation requirements of these Specifications.

END OF SECTION

SECTION 46 36 53 – CHEMICAL TABLET FEEDING EQUIPMENT

PART 1 – GENERAL

1.01 THE REQUIREMENT

A. The Contractor shall furnish and install, complete and operable, new factory-built tablet erosion chemical feeding equipment with all necessary parts and accessories.

B. Unless specifically indicated otherwise, the arrangement of equipment shown on the Drawings is based upon information available at the time of design and is not intended to show exact dimensions particular to a specific

1.02 SUBMITTALS

A. Submittals shall be furnished in accordance with the requirements of Section 01 33 00 – Submittal Procedures.

B. Product Data:
   1. Contractor shall supply one (1) electronic copy of submittal data.
   2. Component data and shop drawings of the system shall be supplied, including dimensions, weight, dimensions, and parts list.
   3. Cut sheets of the Manufacturer's recommended chemical tablets, including tablet dimensions, dry weight, and chemical percent availability.

1.03 OPERATION AND MAINTENANCE MANUALS

A. The Manufacturer shall provide Operation and Maintenance Manual hard copies and electronic version in PDF format for the polymer blending and feed equipment and all system components.

1.04 QUALITY ASSURANCE

A. Manufacturer shall have minimum five years' experience in manufacturing chemical tablet feed systems.

B. Manufacturer shall provide a 2-year equipment warranty.

C. Contractor shall obtain all equipment provided under this Section from a single supplier or manufacturer who shall assume full responsibility for the completeness and proper installation of the chemical feed equipment.

1.05 SPARE PARTS

A. Manufacturer shall provide all spare parts anticipated to be required for the first 2 years of operation. Manufacturer shall clearly define quantity and description of part and associated part numbers as part of Manufacturer's scope of supply.

B. Spare parts shall be placed in a separate container clearly marked as "Spare Parts." All parts shall be identified and clearly labeled with applicable part numbers.

PART 2 – PRODUCTS

2.01 CHLORINATION TABLET FEED EQUIPMENT

A. Contractor shall provide one (1) flow rate proportional chemical tablet feeder unit to provide chlorination to the treatment plant effluent. The equipment shall be sized to handle an average daily flow of 90,000 gallons.

B. The feeder shall be for installation outdoors, in-line with treatment accomplished by immersion of vertically stacked chemical tablets. The tablet feeder shall be equipped with a self-draining contact area to allow for a complete dry down during no flow conditions. The tablet feeder hopper shall be sized to hold at least 40 tablets to reduce the frequency of refills. The inlet/outlet hubs shall be sized to allow direct piping of SCH 80 PVC as shown on the Contract Drawings.

C. Chlorination shall be provided through the use of calcium hypochlorite tablets with at least 70% available chlorine upon dissolution.

2.02 DE-CHLORINATION TABLET FEED EQUIPMENT

A. Contractor shall provide one (1) flow rate proportional chemical tablet feeder unit to provide de-chlorination to treatment plant effluent. The de-chlorination feeder shall be located downstream of the chlorination equipment as shown on the Contract Drawings. The equipment shall be sized to handle daily flows up to 90,000 gallons per day.

B. The feeder shall be for installation outdoors, in-line with treatment accomplished by immersion of vertically stacked chemical tablets. The tablet feeder shall be equipped with a self-draining contact area to allow for a complete dry down during no flow conditions. The tablet feeder hopper shall be sized to hold at least 40 tablets to reduce the frequency of refills. The inlet/outlet hubs shall be sized to allow direct piping of SCH 80 PVC as shown on the Contract Drawings.

C. De-chlorination shall be provided through the use of either:
   1. Ascorbic acid tablets with at least 75% available ascorbic acid upon dissolution; or
   2. Sodium sulfite tablets with at least 92% bioavailability upon dissolution.

2.03 MANUFACTURERS

A. Chemical Tablet Feeder Acceptable Manufacturers:
   1. Norweco;
   2. Accutab;
   3. Or ENGINEER-approved equal.

PART 3 – EXECUTION

3.01 MANUFACTURER'S SERVICES

A. Services of the Manufacturer shall be in accordance with these Specifications.

3.02 INSTALLATION

A. Contractor shall install the equipment in accordance with installation requirements of these Specifications.

B. The Contractor shall install the specified equipment per the Contract Documents and Manufacturer's recommendations.

END OF SECTION

SECTION 46 5353 – SEQUENCING BATCH REACTOR PROCESS EQUIPMENT

PART 1 - GENERAL

1.01 THE REQUIREMENT

A. The Contractor shall assign full responsibility for the functional operation of all Sequencing Batch Reactor (SBR) System components to a Single Source Supplier. This Section covers the work necessary of the SBR Manufacturer to furnish, inspect the installing contractor's equipment installation and connections, calibrate, and place into operation the SBR System along with all other supporting equipment and accessories as specified herein.

B. American Iron and Steel (AIS) requirements apply to this Section. All iron and steel products used in this project must be produced in the United States in accordance with the Consolidated Appropriations Act, 2014.

C. System Source & Quality Assurance:

The SBR System shall be supplied by accompany of good reputation that is regularly engaged in the manufacture and fabrication of SBR wastewater treatment systems. The manufacturer's experience shall include a minimum of ten (10) installations where equipment of similar size and design has been in operation successfully in a similar process for a minimum of five (5) years. The supplier shall supply the following components: mixers, decanters, diffusers, pumps, actuators, valves, instrumentation, and controls as specified herein.

D. Electrically Actuated Valve Quality Assurance

Actuated valves shall be tested prior to shipment. Testing shall consist of the following:

1. Project and nameplate data verification per assembly documentation
2. Limit switch and torque switch setup and cycle test
3. Hydrostatic test (two pressurization cycles) for all plug and butterfly valves

E. Control Panel Quality Assurance

All Control Panels shall be UL certified. Testing by manufacturer's electrical engineering prior to releasing for shipment shall be completed. Testing shall consist of the following:

1. Point to point testing of all wiring prior to application of power
2. Intended supply voltage shall be applied to the enclosure
3. All components shall be tested for proper operation and calibration
4. The PLC and operator interface program shall be loaded and functionally checked
5. All components shall be checked to confirm proper mounting specifications have been followed
6. Enclosure shall be inspected for defects and repaired if necessary
7. All labeling of wires and devices are correct properly and clean
8. The manufacturer shall finalize the factory panel checkout by completing a control checklist to document all testing completed above. This document must be signed by a professional electrical engineer.

F. System Operation and Maintenance Manual

Complete system Operation and Maintenance manuals shall be available in hardcopy and electronic form. The electronic form shall be provided in pdf format and be fully bookmarked. Manuals shall address:

1. General project information
2. Installation and start up
3. Process design and operational control description
4. Mechanical, electrical, and field instrumentation component descriptions

5. Maintenance and trouble shooting
6. Mechanical and electrical drawings

G. Motor Compliance

Motors shall follow the Energy Independence and Security Act of 2007 (EISA 2007). The SBR area electrical classification shall be Non-classified. Motors within the basin shall be rated for a temperature code T2A (280°C).

H. Installation

The installation of the equipment furnished by the manufacturer shall be the responsibility of the installing contractor in accordance with all requirements of the contract documents.

I. Specification Precedence

The specifications for equipment and controls under this Section supersede specifications for equipment and controls specified elsewhere in the contract documents and drawings. Purchased components such as gear reducers, pumps, motors, valves, and actuators shall be provided with standard recommended manufacturers paint, unless otherwise specified within this Section.

J. Service

The equipment manufacturer shall furnish the services of a factory trained representative for a maximum of three trips and twelve (12), eight-hour days at the jobsite to inspect the installing contractor's equipment installation, supervise the initial operation of the equipment, instruct the plant operating personnel in a proper operation and maintenance, and provide process assistance. If additional service is required due to the mechanisms not being fully operational, at the time of service requested by the contractor, the additional service days will be at the contractor's expense.

K. Performance Guarantee

The single source supplier of the SBR System equipment shall provide a written Process Performance Guarantee to guarantee the SBR System will meet the effluent criteria specified under this Specification Section. The guarantee period shall commence at time of plant single basin start-up, once the system has reached equilibrium (or within six months of equipment shipment, whichever comes first), and shall be in force for a period of one year. The Process Performance Guarantee shall be submitted as part of the engineer's submittal data.

L. Warranty

The manufacturer shall provide a written warranty against defects in materials and workmanship. Manufacturer shall warrant the goods provided by the Manufacturer to be free from defects in materials and workmanship under normal conditions and use for a period of one (1) year from the date the single-basin equipment is put into service, or eighteen (18) months from shipment of equipment, whichever comes first. This warranty shall not apply to any goods or parts which have been altered, applied, operated, or installed contrary to the Manufacturer's instructions or subjected to misuse, chemical attack or degradation, negligence, or accident.

M. Approved Manufacturers:
1. Aqua-Aerobic Systems, Inc.
2. Fluidyne Corporation
3. Parkson Corporation
4. OR ENGINEER-approved equal.

PART 2 - PRODUCTS

1.02 PERFORMANCE REQUIREMENTS

A. The manufacturer of the SBR system shall be completely responsible for the proper design and integration of their system, including but not limited to; diffused aeration equipment, blowers, pumps, mixers, decanters, valves, and controls. In addition, the SBR manufacturer shall be responsible for providing and integrating local control panels. The equipment and controls in one SBR basin shall be of the same make and model as in the other SBR basin. All equipment shall perform as specified and the completed installation shall operate in accordance with the requirements of the plans and specifications.

B. Site Specific Conditions:

90,000 gpd	Average daily flow
135,000 gpd	Maximum daily flow
270,000 gpd	Peak Hourly flow of 2-hour(s) duration

Loadings	**Influent**	**Effluent**
BOD	360 mg/l	10 mg/l
TSS	250 mg/l	10 mg/l
TKN	40 mg/l	4 mg/l
Total Nitrogen	-- mg/	10 mg/l
Phosphorus	8 mg/l	-- mg/l

Wastewater temperature	50°F to 68°F
Jobsite elevation	4,700 feet MSL
Ambient air temperature	30°F to 100°F
Alpha (maximum value allowed)	0.85
Beta (maximum value allowed)	0.95
F/M ratio	0.16 lb BOD_5/lb MLSS – Day
Max MLSS at low water level	3,500 mg/l
Maximum Cycles at Max. Daily Flow	5/day/basin
Oxygen Requirements	1.25 lbs O2/lb BOD_5 applied 4.6 lbs O2/lb TKN applied
Minimum Aeration Time	2.15 hrs/cycle at maximum daily flow
Minimum Mixing Time	2.99 hrs/cycle at maximum daily flow
Minimum Settling Time	0.75 hrs/cycle at maximum daily flow

C. The SBR cycle structure is based on a timer system with basin level overrides. The cycle structure shall remain constant up to the maximum daily flow. Advancing cycles prior to the maximum daily flow is not acceptable.

1.03 EQUIPMENT

A. Structures:

1. The SBR shall be field erected in two (2) rectangular cast-in-place concrete basins as shown on the contract drawings and summarized below:

Basin Width:	18.0 feet
Basin Length:	36.0 feet
Basin Height:	17.0 feet
Empty Tank volume:	74,616 gallons
Design Operating Volume	56,178 gallons
Type of liquid:	Activated sludge
Max. Dry matter content:	3,500 MLSS
Minimum Operating Level:	10.5 ft. SWD
Maximum Operating Level:	14.0 ft. SWD

2. The Aerobic Digester basin shall be field erected as shown on the contract drawings and summarized below:

Basin Width	10.83 feet
Basin Length	20.0 feet
Basin Height:	17.0 feet
Minimum Operating Level	9.8 feet SWD
Maximum Operating Level	14.0 feet SWD

3. The Post-Equalization/Holding basin shall be field erected as shown on the contract drawings and summarized below:

Basin Width	7.2 feet
Basin Length	20 feet
Basin Height:	17.0 feet
Minimum Operating Level	0 feet SWD
Maximum Operating Level	9.3 feet SWD

B. Influent Plug Valve(s):

1. Furnish two (2), 10-inch diameter electrically operated flanged plug valve, one for each basin, to control the influent flow. Valves shall be a 125# flanged end connection, ASTM A126 Class B cast iron body with welded in nickel seat, EPDM coated ductile iron plug, assembled, and tested with 230-volt, single phase, 60 Hz cycle open/close service electric actuator. The valve shall be a non-lubricated type with a port area of at least 80% of full pipe size. Valve actuator shall be provided in accordance with these Specifications.

2. Each valve shall include a manual override with limit switch feedback to the micro-processor in both the open and closed positions. Field wiring and junction/box disconnect shall be provided by the installing contractor. Provisions for valve access shall be provided by the installing contractor.

C. Submersible Direct Drive Mixer(s):

1. Furnish one (1) close-coupled, submersible type direct drive mixer for each basin, as shown on the project drawings. All components of the mixer, including the motor, shall provide continuous underwater operation while the mixer blades are completely submerged. Mixer unit shall be approved according to UL standards. The mixer shall be capable of handling typical domestic raw, screened sewage with normal concentrations of rags, strings, and sand/grit. A guide rail system shall be used to support each mixer during operation and to guide the units during installation and lubrication/preventative maintenance inspection. The system shall consist of a bottom-bearing console, stop bracket, or stop console, guide pipe, fixing bracket and guide holder assembly. All major components shall be fabricated of 316 stainless steel.

2. Mixer selection shall be based on the manufacturer's recommendation, to provide the best possible, most economical performance and mechanical solutions that meet or exceed specified application data:

Tank I.D.	SBR Tanks
No. of tanks:	2
Phase/Voltage/Hz:	3ph/460V/60Hz
Maximum propeller RPM:	900
Propeller diameter, inches:	13
No. of propeller blades:	2
Propeller material:	316 Stainless steel
FLA, Amps:	6.0
Maximum weight, lbs.:	150

D. Decanter Assembly:

1. Furnish one (1) new mechanical floating decanter and related equipment accessories as described herein for each basin. Each decanter shall be capable of chasing the sludge blanket; be solids excluding to minimize entrance of mixed liquor into the decanter during the SBR aeration and mixing stages; and be designed with submerged supernatant inlet to minimize induction of scum and floatable solids. Two positive means of sealing the decanter shall be provided. Each decanter shall be capable of withdrawing decant fluid from 4-6 inches beneath the liquid surface, regardless of liquid depth, down to the minimum allowable water level specified below.
   a. Maximum allowable water level in the basin during normal operation is 14 ft.
   b. Maximum allowable water level in the basin during occasional storm flow event 16 ft.
   c. Minimum allowable water level in the basin is 10.5 ft.
   d. The decant pipe must be located 1 ft. below the LWL by the installing contractor.
   e. Each decanter shall be rated for an average flow of 211 gallons per minute.

2. The weir shall include vortex control baffles permanently affixed to the weir. The weir shall be attached to the actuator through a single shaft or linkage which shall also function as the torque restraint. The actuator shall be capable of operating with a closing force of 1,500 lbs. and shall operate from a 115-volt, single phase, 60 hertz power source. Adjustable limit switches shall be included to permit adjustment of the weir opening. A corrosion-resistant removable cover shall be included to provide protection to the actuator and motor during normal operation. The power section is 304 stainless steel. #14 AWG ten-conductor power cable shall be provided from the NEMA 4X junction box of the unit to the basin wall. Supply of junction box/disconnect at the basin wall shall be the responsibility of the installing contractor.

3. Each unit shall be equipped with a modular float filled with closed cell polyurethane foam having a minimum 2.0 lbs./ft3 density. Float shall be completely sealed to prevent the foam from being in contact with the external environment. Float shall have adequate reserve buoyancy as specified within this Section to ensure stability and to provide support flotation required during decanter servicing. A urethane type seal shall be molded into the bottom of the float assembly to receive the decanter weir.
4. Each decanter shall include a discharge hose of sufficient size to permit vertical movement of the decanter and provide sufficient capacity to handle the design decant flow rate. Discharge hose shall be an EPDM tube, tire chord braided with helix wire reinforcement. A flanged end 90-degree elbow shall be provided. Proper flanged connections to the decanter and the discharge point shall be provided for trouble free operation while permitting a means for disconnecting for service. Through-the-wall pipe, gaskets, and hardware beyond the 90-degree elbow shall be provided by the installing contractor. The installing contractor shall provide a ¾" valve with hose bib connection on the decant line between the decanter and the decant valve.
5. Each decanter shall include a restraint and support system to secure the decanter in its designate location within the basin and to support the decanter when the basin is empty. Furnished as part of the decanter assembly shall be a mooring frame, which shall permit the assembly to move up and down following the change in liquid level while restrained within the vertical pylons.
6. Each decanter shall be moored with a restrained mooring system consisting of vertical pylon(s) with base plate and/or supports as specified above. Each pylon/support with base plate shall be attached to the basin floor and filled with concrete by the installing contractor. Mooring post supports, if specified within this Section shall be provided for attachment to the basin wall by the installing contractor. The restrained and support system shall be construction of 304 stainless steel or hot-dip galvanize after fabrication.
7. Furnish one (1), 6" diameter electrically operated butterfly valve for each basin to control the decant rate. The modulating valve shall be controlled by the SBR control panel PLC. The valves and the electric valve actuator shall be provided in accordance with these Specifications, and rated for modulating service. Valve actuator shall include motor winding protection, manual override, and limit switch feedback in the open and closed position. Field wiring and junction/box disconnect shall be provided by the installing contractor. Systems not including decant valves are not acceptable.

E. Retrievable Fine Bubble Air Diffuser Assemblies

1. The aeration system shall be a fine bubble diffused air system and shall be a retrievable configuration as shown on the contract drawings. Each assembly shall consist of membrane tube diffusers, frame assembly, manifold, track/beam, isolation valves, and lifting mechanism. The aeration system shall be designed to provide oxygen distribution to the entire basin. Duplex diffuser tubes total that specified herein shall be provided for each diffuser rack. No change in the basin geometry shall be allowed. The velocity and mixing in the basin shall be sufficient to ensure complete biological solids suspension and dispersion.

2. The aeration system for the aeration basins shall be capable of providing mixing such that when operated under any combination of the specified design conditions it shall suspend all biological floc and mixed liquor suspended solids throughout the liquid mass in each basin. The aeration system shall further be capable of maintaining complete aerobic conditions and suspension of all biological floc and suspended solids throughout the liquid mass in each basin. The aeration system shall be designed to operate within a minimum of 10.5 feet and a maximum of 14 feet side water. depth and shall be capable of transferring a minimum of 36.4 lbs/hr of process oxygen (A.O.R.) into the wastewater.

3. In addition, the aeration system shall be designed to transfer the following minimum amount of oxygen per day at standard conditions in clean water, at the specified submergence, air rate, and pressure.

Minimum Air Rate (scfm per basin)	269
Pressure @ Top of Drop Pipe (psig)	7.85
Diffuser Submergence (ft.)	13.45
Maximum Diffuser Rack Size	16 Duplex tubes

4. Air diffuser assemblies shall be of the tubular, non-clog, non-buoyant. fine bubble type with a flexible perforated air release membrane. The diffuser membrane shall be constructed from EPDM rubber and be suitable for continuous or intermittent aeration. Each membrane shall be held in place by 304 stainless steel band clamps. The membrane shall include UV inhibitor and compounds designed for resistance to chemical attack, weathering, fatigue, and aging. The diffuser assemblies shall have double backflow prevention to prevent liquid from passing into the aeration header. The membrane exterior surface shall be smooth as to inhibit biological film growth. The membrane shall inflate during aeration and deflate when the airflow is discontinued, further restricting biological film growth. The membrane shall be cleanable in place with water from a high-pressure wash. Each diffuser membrane shall be supported over its' full length and circumference by a support tube.

5. Each assembly shall include a diffuser hoist assembly with base socket to receive a portable electric winch. A total of one (1) portable electric winch shall be provided for the diffuser assemblies. The winch mechanism shall be of sufficient design capacity to raise the diffuser rack assembly to the servicing position. The portable electric winch shall operate from a single phase, electrical supply. The winch shall be provided with a total of 12 feet of electrical cable. Supply of electrical power supply, wiring and junction box for winch shall be the responsibility of the installing contractor. The lifting mechanism shall consist of a hoist, guide wheels, stainless steel sheave with bronze bushing, and 304 stainless steel lifting cable. The lifting mechanism shall be of sufficient design capacity to raise the diffuser rack assembly to the servicing position. In addition, the mechanism shall be designed to allow the diffuser rack to be pivoted 360° when in the service position for ease of diffuser inspection and servicing.

6. Each diffuser assembly shall include a 3" diameter wire reinforced EPDM flexible air line and a 3" diameter manually operated isolation butterfly valve with quick disconnect end fittings, and a threaded flange, elbow and quick disconnect adapters. All air distribution piping, gaskets, and hardware beyond the threaded flange shall be supplied by the installing contractor. The vertical track/beam shall support the lifting mechanism assembly during operation and servicing. The valves shall be provided in accordance with these Specifications. Routing the air header to the basins and anchoring the diffuser assemblies to the basin shall be the responsibility of the installing contractor.

F. Fixed Coarse Bubble Diffuser System

1. The aeration system for the Digester shall be a coarse bubble diffused air system and shall be a fixed configuration as shown on the contract drawings.

   Airflow per basin: 113 SCFM
   Riser Pipe Diameter: 3 inches
   Diffuser Material: Schedule 80 PVC

2. Furnish one (1) fixed coarse bubble diffuser system for the digester basin. The diffuser system shall consist of diffusers, supports, manifold, and riser pipe. Diffuser pipes shall be not less than three-inch nominal diameter. Each diffuser section shall be supplied with uniformly-spaced machined orifices located on the top of each section. Size and number of orifices shall be provided to ensure a uniform air distribution.

3. Each diffuser section (and manifold pipe) shall be supported at span lengths not greater than 6 feet by supports. No unsupported end shall be longer than 2 ft. Diffuser sections shall be secured to the supports with a corrosion resistant retainer. Support brackets shall be adjustable to provide header leveling within ± 1/4 inch of a fixed elevation for each aeration basin.

4. Diffuser system shall be field assembled by the installing contractor. All submerged PVC joints 8" and smaller shall be socket welded joints. Expansion joints shall be included to compensate for thermal expansion for PVC manifold runs longer than 40 feet. Pipe sizing, location and supports shall be as shown on the drawings. Diffuser sections and internal manifold piping shall have flange connections for disassembly. The riser pipe shall terminate in a flanged connection at the top of the basin wall. All piping, gaskets, and hardware beyond the riser pipe's flanged connection shall be the provided by the installing contractor. Attachment to the basin shall be the responsibility of the installing contractor

G. Blowers

1. Furnish three phase rotary lobe type, positive displacement blowers as described below with premium efficient, T.E.F.C., Class F insulation, Teco, Siemens, or equal motor. The blowers shall be manifolded for individual and/or combined operation. Blowers shall be suitable for operation under the following site conditions:

Elevation:	5,066 Ft. A.S.L.	**Process Gas:**	Air
Ambient Pressure:	13 PSIA	**K-Value:**	1.4
Design Ambient Temp.:	100F	**Specific Gravity:**	1.0
Inlet Pressure:	12 PSIA	**Allowable Blower Package Noise:**	75 dB(A) @ 1-Meter
Inlet Temperature:	100F	**Supply Voltage:**	460 VAC

Blower Quantity:	4
Motor Size:	20 HP (SBR Aeration) (3) 7.5 HP (Digester) (1)
Blower Airflow Rate:	269 SCFM (SBR Aeration) 113 SCFM (Digester)
Discharge Pressure:	7.63 PSIG (SBR Aeration) 6.63 PSIG (Digester)
Discharge Isolation Valve Size:	3 inches (SBR Aeration) 2 inches (Digester)
VFD Control:	Yes (SBR Aeration) No (Digester)

2. Each blower assembly shall be complete and mounted on a base weldment with four corner anti-vibration mountings, designed for direct application on a concrete slab or other solid foundation. Each assembly shall be suitable for shipment as a complete unit, factory assembled (less discharge pipe fittings) as much as possible to facilitate shipping and handling. Equipment shall include a blower, electric motor, belts and sheaves, inlet package, discharge silencer, discharge check valve, rubber inlet sleeve and discharge connection, pressure relief valve, butterfly discharge isolation valve, discharge pressure gauge, and rubber expansion joint. A personnel protection guard shall be included over the belts and sheaves.

3. A sound enclosure shall be provided for each blower package to help reduce the resultant noise level. The sound enclosure shall encompass the entire blower package for maximum noise attenuation. The enclosure shall be constructed of durable powder coated carbon steel with a sound absorbing internal surface. The walls and ceilings shall be shop assembled with all corners and joints properly insulated to prevent noise leakage and maintain the attenuation levels of the room. The blower package and sound enclosure shall ship as a unitized one-piece assembly. Maintenance access doors shall be provided to facilitate servicing of the blower package. A baffled inlet shall be provided to allow supply and cooling air to enter the enclosure during the operation of the blower. An exhaust fan sized for proper enclosure ventilation will be supplied.

4. Furnish two (2) electrically actuated butterfly valve(s) as shown on the plans to direct the blower airflow to the appropriate basin. The valves shall be provided in accordance with these Specifications. Provisions for valve access shall be provided by the installing contractor.

H. Sludge Wasting Pump

1. Furnish one (1) submersible non-clog pump for each basin as specified herein. Each pump shall be equipped with a submersible electrical motor connected for three phase operation. Pump housing shall be painted cast iron. Pump shall include an adequate length of multi-conductor chloroprene jacketed type SPC cable suitable for submersible pump applications. The power cable shall also be sized according to NEC and ICEA standards. The pump shall be supplied with a mating cast iron discharge elbow. Each unit shall be fitted with an adequate length of steel lifting chain of adequate strength to permit raising and lowering the pump.

Quantity:	1 per basin
Pump Function:	Sludge
Motor Size:	1.8 HP
Pump Flow Rate:	20 GPM @ 15 ft TDH
Discharge Size:	2”

2. The pump shall be capable of handling raw, unscreened sewage. The discharge connection elbow shall be permanently installed with the discharge piping. The pump shall be automatically connected to the discharge connection elbow when lowered into place, and shall be easily removed for inspection or service. There shall be no need for personnel to enter the basin to service the pump. Sealing of the pumping unit to the discharge connection elbow shall be accomplished by a simple linear downward motion of the pump.

3. An upper guide bar bracket shall be provided with each pump. The entire weight of the pumping unit shall follow guide bars into the operating position and pressed tightly against the discharge connection elbow with metal-to-metal contact. The pump, with its appurtenances and cable, shall be capable of continuous submergence underwater without loss of watertight integrity to a depth of 65 ft. Supply of all discharge piping, supports, gaskets, and hardware beyond the flanged connection specified above shall be the responsibility of the installing contractor. The pump shall be removed with the portable crane arm.

4. Each pump shall include a discharge check valve and plug valve to control the design transfer flow rate. The plug valve shall be a non-lubricated type with a port area of at least 80% of full pipe size in accordance with these Specifications. Valve(s) shall be provided loose for installation within the discharge piping by the installing contractor. Valve gaskets and hardware shall be supplied by the installing contractor. Field attachment of the pump to the basin shall be the responsibility of the installing contractor.

I. Post-EQ Flow Control Valve

Furnish one (1), 6" diameter electrically operated butterfly valve to control the effluent discharge rate. The modulating valve shall be controlled by the SBR control panel PLC. The valves and the electric valve actuator shall be provided in accordance with these Specifications, and rated for modulating service. Valve actuator shall include motor winding protection, manual override, and limit switch feedback in the open and closed position. Field wiring and junction/box disconnect shall be provided by the installing contractor. Systems not including decant valves are not acceptable.

J. Post-EQ Effluent Flow Meter

One effluent flow meter shall be provided to monitor the effluent discharge rate. The 6” electromagnetic flow meter shall be Krohne, Toshiba, or ENGINEER-approved equal. Output shall be 4-20 mA. The flow meter shall be provided loose to be installed and wired by the installing contractor.

K. Removable Crane Arm System

One portable crane arm assembly shall be provided to easily raise and lower all mixers and pumps within the SBR basin for installation and inspection. It shall consist of a crane arm with telescopic capabilities, rotatable at 360º, a hand winch with brake for load control with stainless steel wire, a hook, and an intermediate piece. The assembly shall be positioned directly into the guide pipe receptacle. All crane base guides shall be located so that multiple pieces of equipment can be removed from a single base.

L. Dissolved Oxygen Controller

Furnish one (1) dissolve oxygen controller per basin (ABB AWT440 or approved equal). The controller shall receive the digital input from a maximum of two devices. The controller will communicate with the main PLC via 4-20 mA signals. The controller will have a NEMA 4X/IP66 metal enclosure with a corrosion-resistant finish and shall be AC powered from a 100-230VAC, 60Hz power source.

M. Dissolved Oxygen Sensors

Furnish one (1) dissolved oxygen sensor per basin (Aztec ADS420 or approved equal). The probe shall be a continuous-reading probe utilizing luminescent sensor technology, and shall provide electrolyte-free operation without requiring sample conditioning. Sensors shall be suspended on a removable mounting pipe assembly. 304 stainless steel pipe, 304 stainless supports and 304 stainless steel anchors shall be provided. Field attachment of the pipe and supports to the basin shall be the responsibility of the installing contractor. Field wiring, conduit, and installation of cable shall be the responsibility of the installing contractor.

N. Pressure Transducer

Furnish one (1) submersible pressure transducer unit constructed of stainless steel for each basin (Keller Levelrat or ENGINEER-approved equal). Transducer shall utilize a diffused silicone semiconductor sensor protected by an integral stainless-steel diaphragm with seal fluid. Transducer output shall be a 4-20 mA signal. Electrical connection shall be 2-wire, loop powered through a shielded integral cable comprised of 22 AWG conductors and separate drain wire. Transducers shall be suspended on a removable mounting pipe assembly. 304 stainless steel pipe, 304 stainless supports and 304 stainless steel anchors shall be provided. Field attachment of the pipe and supports to the basin shall be the responsibility of the installing contractor. A moisture excluding aneroid bellows shall be supplied loose for installation in the junction box/ disconnect. Attachment and supply of the junction box/disconnect at the basin wall shall be the responsibility of the installing contractor.

O. Level Sensors

Furnish one (1) level sensor assembly consisting of a float switch with a smooth, chemical resistant polypropylene casing, and 316 stainless steel mounting brackets for each basin (Anchor Scientific model GSI 40NONC or approved equal). Each float switch shall be provided with a three-conductor electrical cable. Electrical cable shall terminate at a junction box/disconnect located at the basin wall. Field wiring and junction box/disconnect shall be provided by the installing contractor. Adhesive anchors of 304 stainless steel shall be provided for anchoring the level sensor mounting bracket.

P. SBR Control Panel with Motor Starters

1. The control system (i.e., SBR PLC) shall be designed to optimize the SBR process while minimizing operator attention and to accommodate the continuous maximum daily flow without adjusting cycle structures. The SBR PLC shall be programmed to accept and/or control other field instruments and equipment for the proper function of the entire WWTP. The control software program shall be factory tested prior to installation at the jobsite.

2. The control system shall have a timer-based system with level overrides and shall provide control, sequence, monitoring, and alarm annunciation capabilities. The operator shall be able to access the timer values and set points through the operator interface panel to allow for adjustment of cycle times and system flexibility. The control system shall be designed to automatically accommodate the plant's full range of loads and flows.

3. A complete control system for the WWTP shall be provided as described in the following and as shown on the contract drawings and these specifications. The control system shall include a circuit breaker disconnect, control transformer, branch protection, motor starters, microprocessor control, indicator lights, HAND-OFF-AUTOMATIC selector switches.
4. The incoming service of the control system shall be 460 volt, 60 hertz, three-phase. Motor starters for the equipment listed below shall be provided within the SBR control panel. Elapsed time indication shall be provided through (the operator interface of) (hard-wired elapsed time meters located within) the SBR control panel for equipment indicated by an asterisk (*). The list below shows the control requirements for the different treatment process within the SBR PLC. This list is not all inclusive, refer to the Contract Documents for all control requirements.

(Table on next page)

SBR EQUIPMENT DESCRIPTION

2 3.6 HP Mixer(s)*
2 2 HP Sludge Pump(s)*
3 20 HP Blowers*
2 Influent Valve(s)
2 Decanter Valve(s)
2 Air Control Valves
2 4-20 mA D.O. signal(s)
2 4-20 mA Pressure Transducer(s)
2 Level Sensors
2 Common Alarm

HEADWORKS EQUIPMENT DESCRIPTION

1 Common Alarm

DIGESTER EQUIPMENT DESCRIPTION

1 7.5 HP Blower(s)*
1 4-20 mA Pressure Transducer(s)
1 Level Sensors

POST-EQ EQUIPMENT DESCRIPTION

1 4-20 mA Flowmeter(s)
1 4-20 mA Pressure Transducer(s)
1 Level Sensor
1 Effluent Valve

DEWATERING EQUIPMENT DESCRIPTION

1 Common Alarm

DRYING BED LIFT STATION EQUIPMENT DESCRIPTION

1 Common Alarm

OVERFLOW LIFT STATION EQUIPMENT DESCRIPTION

1 Common Alarm

GENERATOR PAD EQUIPMENT DESCRIPTION

1 Generator Status (Running/ Off/ Auto)
1 Automatic Transfer Switch Position
1 Low Fuel Alarm
1 Fail Alarm

Q. Enclosure

1. The automatic controls shall be provided in a UL listed, NEMA Type 4X 304 stainless steel (12 gauge) floor mount enclosure that provides insulation and protection for electrical controls and components from highly corrosive environments indoors and outdoors. Enclosure shall include a seamless foam-in-place gasket to assure watertight and dust-tight seal. An internal 3-point latch and 316SS padlocking handle shall be provided. Enclosures shall be unpainted, with a smooth brushed finish. Enclosure shall include a painted white mild steel (12 gauge) sub-panel mounted with collar studs. The control enclosure shall be mounted remotely in the operations building.

2. Each control enclosure assembly shall be provided with corrosion inhibitors to protect interior electrical components from damage caused by high humidity. The corrosion inhibitors shall be installed prior to shipment to provide protection during shipment and storage of the enclosure.
3. A thermostat-controlled air conditioner with noise suppression shall be supplied to protect control components mounted inside the enclosure from high temperatures, humidity, and ambient air contaminants. The air conditioner shall be constructed of brushed finish stainless steel 304 material and provide NEMA 4X Type protection from outdoor and hose-down applications. The air conditioner unit shall use CFC-free or environmentally safe refrigerant that is universally accepted.
4. A UL listed, automatic molded case 3-pole disconnect breaker shall be provided in the control enclosure(s). The primary function of the disconnect switch shall be to provide a means to manually open a circuit and automatically open a circuit under overload or short circuit conditions. The disconnect breaker shall have a door mounted operating mechanism with trip indication. Power distribution connectors shall be mounted integrally to the circuit breaker for multiple load connections. Integral connectors shall be provided.

R. Control Panel Wiring and Assembly

1. All Control panels shall be UL certified. Testing by manufacturer's electrical engineering prior to releasing for shipment shall be completed. Testing shall consist of the following:
   - Point to point testing of all wiring prior to application of power
   - Intended supply voltage shall be applied to the enclosure
   - All components shall be tested for proper operation and calibration
   - The PLC and operator interface program shall be loaded and functionally checked
   - All components shall be checked to confirm proper mounting specifications have been followed
   - Enclosure shall be inspected for defects and repaired if necessary
   - All labeling of wires and devices are correct, properly installed and clean
2. The manufacturer shall finalize the factory checkout by completing a control panel checklist to document all testing completed above. Upon the successful completion of the control testing of the enclosure assembly, all applicable documentation (i.e. finalized drawing set, signed control checklist cover page, device data sheets, etc.) shall be placed in the drawing pocket of the enclosure.
3. All control enclosures shall be custom assembled and wired in an Underwriters Laboratories (UL) certified cabinet shop using quality materials and labor. Short circuit rating of control enclosure shall be 5 kA RMS symmetrical @ 480VAC maximum. All control panel single conductor wire shall be 16 AWG multi-strand machine tool wire (MTW) minimum, with PVC insulation. Wire colors are as follows: (next page)

208 VAC or higher	-	Black
120 VAC control power	-	Red
Neutral	-	White
Ground	-	Green with Yellow Stripe
Power from remote source	-	Orange
Neutral from remote source	-	White with Orange Stripe
24 VDC (+)	-	Blue
24 VDC (-)	-	White with Blue Stripe
Intrinsically Safe	-	Light Blue

4. All wires shall be clearly marked with an identification number consistent with the wiring schematic drawing. Wire markers shall be a thermal transfer printable type. The material shall be a self-laminating vinyl. Labels shall be Brady THT-9-427-10 or ENGINEER-approved equal. Wiring inside the control panel shall be run in PVC wiring duct rated for continuous temperatures up to 122°F (50°C). Devices mounted in the enclosure door shall have wires run in spiral wrap to avoid pinch points when opening and closing the door. Control components mounted internal and external to the enclosure shall be mounted with stainless steel hardware and clearly labeled with a plastic identification nametag. The tag shall be white with black lettering.

S. Motor Starter(s)

1. A full voltage non-reversing Integrated Motor Starter-Controller shall be provided for motor applications up to 15 kW. Each starter shall provide control, protection, and monitoring functions for the motor. The starter shall be NEMA rated IEC form factor and shall have certifications according to UL and CSA standards and shall bear the CE marking. The starter shall have a maximum rated operational voltage of 690V and provide a 42kA @ 480 VAC rated breaking capacity on short circuit. The starter shall have a mechanical durability of 15 million operations. The starter shall provide short circuit trip, thermal overload trip with selectable tripping class, under current trip and phase imbalance trip.

2. A full voltage non-reversing NEMA Style motor starter shall be provided for motor applications over 15 kW. Each starter shall consist of a circuit breaker, contactor, and overload relay. The starter shall be NEMA rated and shall have certifications according to UL and CSA standards and shall bear the CE marking. The starter shall have a maximum rated operational voltage of 600V and provide a minimum 18 kA @ 480VAC and 25 kA @ 240 VAC interrupt rating on short circuit when used in combination with a PowerPact circuit breaker. The starter shall have a mechanical durability of 2 million operations. The solid-state overload relay shall have class 10/20 (selectable) tripping characteristics with trip current adjustment, phase loss and unbalance protection.

T. Variable Frequency Drive(s)

UL Listed Variable Frequency Drives (VFD) shall be provided to control pumps and/or blowers. The VFD's shall control pump and/or blower speed via an analog signal from the PLC. The VFD output frequency shall be programmable. The VFD shall be provided in a NEMA Type 20 panel mount package and rated for an operating temperature of -4° to 122°F (-20° to 50°C). The VFD shall have a 65-kA maximum short circuit rating.

U. Transformer

A step-down multi-tap transformer shall be supplied when there is a necessity to reduce incoming 3-phase power to 120 VAC single-phase. The transformer power wire connections (incoming and outgoing) shall be protected with a finger-safe cover to protect against accidental contact. Primary and secondary fuse protection shall be provided. Transformer shall be UL listed and of continuous wound construction with vacuum

impregnated with non-hygroscopic thermosetting varnish. Transformer shall be Square D 9070T or approved equal.

V. Transformer Primary and Secondary Fuse

Properly rated fuses and fuse blocks shall be provided for primary and secondary protection of the transformer. Each fuse shall be equipped with a thermoplastic cover to protect against accidental contact. Clip style fuse block shall be rated up to 600 VAC and 100 amps, dual element, time delay fuses shall be rated up to 600 VAC. Fuse blocks and fuses shall be UL listed. Fuses shall be Littelfuse Class CC or ENGINEER-approved equal. Fuse blocks and fuse covers shall be manufactured by Marathon or ENGINEER-approved equal.

W. Circuit Breaker

All single-phase branch or supplementary circuits shall be protected with a single-pole, C-Curve rated circuit breaker. Circuit breakers shall be rated for 240 VAC maximum, 50/60 Hz and UL 489 listed. Supplementary and branch protection circuit breakers shall be Merlin Gerin Multi 9 or ENGINEER-approved equal.

X. Fuse

Properly rated fuses and fuse holders shall be provided for protection of individual control devices (discrete and analog signals) mounted outside of the enclosure. Each fuse shall be housed in a hinged type fuse block to protect against contact with the fuse. Fuses shall be rated up to 250 VAC and be Littelfuse or approved equal. Fuse holders for discrete devices shall be rated to 600 VAC and 30 Amps. Fuse holders for analog devices shall be rated to 300 VAC and 15 Amps. Fuse holders shall be Allen Bradley 1492 or ENGINEER-approved equal.

Y. Operator Device

1. Operator devices (pushbuttons and selector switches) shall be mounted through the control enclosure door for all automatic controlled equipment. Transformer type pilot lights and illuminated pushbuttons shall be provided for indication of an operation status. Lights shall be a 6 VAC incandescent type lamp. Color coding shall be applied as required and is as follows:
   - Amber – Alarm active, caution
   - Green – Valve open, motor running
   - Red – Valve closed
   - White - Information
2. All operator devices shall be UL Listed, 30.5mm style, NEMA Type 4X rated, oil and water tight with finger safe guards located on the contact blocks to prevent accidental contact with wire connections. Operator device function shall be identified with an engraved white Gravoply nameplate with black letters. Operator devices shall be Square D 9001 or approved equal.

Z. High Frequency Noise Filter

A UL listed active tracking filter shall be provided to protect the PLC and HMI power feeds from high-frequency noise and low-energy transients. It shall be designed for a single-phase input voltage of 120VAC operating at 50/60 Hz. The unit shall provide surge capacity of 25,000 amps and provide transient protection in all modes (Line to neutral, line to ground and neutral to ground).

AA. Ground Fault Duplex Receptacle

A UL listed ground fault circuit interrupter (GFCI) duplex receptacle shall be provided within the panel for instrument (e.g. programming terminal, modem, etc.) use only. The receptacle shall be protected with a 5 Amp circuit breaker. The receptacle shall carry a 20A / 120VAC rating. The electro-mechanical circuit interrupter shall be double-pole and trip free (GFCI protection and shall not be overridden by holding reset button). Built-in transient suppression shall protect GFCI's internal circuitry from voltage transients.

BB. 24 Volt DC Power Supply

A UL listed, industrial grade, compact power supply shall be supplied to provide 24 VDC power to such rated components. The power supply shall be DIN rail mounted and functional with input voltage of 100 to 240 VAC (single-phase) incoming control power. The power supply shall have a green LED which shall be illuminated when output voltage is "OK".

CC. Device Surge Protective Device

A UL Recognized surge protective device shall be provided to protect electronic circuits from high voltage transients and temporary overloads on power and signal lines.

DD. Control Relay

UL listed control relays for general control purposes shall be supplied with a pilot light to indicate when the coil is in an energized state. The relay socket shall be panel or DIN rail mounted inside the enclosure. The relays shall provide the following ratings: 120VAC coil, 10A contact rating (thermal), 250 VAC insulation rating and 5 million mechanical life cycles.

EE. Terminal Block

Standard feed-through screw terminal blocks, DIN rail mounted, shall be supplied for all point to point wiring connections. All terminals shall be numbered per the wiring schematic with printed markers. Terminals shall carry a 600V AC/DC voltage rating.

FF. Auto Dialer

The auto dialer shall be a solid-state component capable of dialing up to 16 phone numbers and shall be housed in a NEMA Type 12 rated enclosure. Phone numbers shall be programmed via the system's keyboard or Touch Tone phone. The unit shall continuously monitor the presence of AC power and the status of four contact closure inputs. Upon initiating an alarm phone call, the system is to "speak" only those channels that are currently in "alarm status". The unit shall optionally be field upgradeable to incorporate a total of 8, 16, 24, or 32 digital alarm inputs. The auto dialer is to use a standard rotary pulse or Touch Tone "dial-up" phone line. The auto dialer shall be an RACO Verbatim® or approved equal.

GG. Programmable Logic Controller

Automatic operation of the SBR shall be controlled through a programmable logic controller (PLC) mounted inside the main control panel. The PLC components shall consist of a power supply, CPU, discrete input and output modules and analog input and output modules. The processor unit shall include built-in USB and two (2) Ethernet IP communication ports. All input and output points supplied (including unused) shall be wired to terminal blocks. Processor design characteristics shall include: 1.0MB user memory size, real-time clock and calendar, battery backed RAM and an operating temperature range between 32°F and 140°F. The PLC processor shall be an Allen-Bradley CompactLogix 1769-L30ER or ENGINEER-approved equal.

HH. PLC Power Supply

Input voltage range of 85-265 / 170-265 VAC, 47-63 Hz, maximum inrush current of 30 amps, backplane output current of 4 amps @ 5V or 2 amps @ 24V, internal fuse protection, ambient operating temperature of 32°F to 140°F, Class I, Division 2 hazardous location certified, UL Listed.

II. Discrete Input Module

Operating voltage of 79 to 132 VAC at 47 to 63 Hz, backplane current draw at 5VDC = 115mA, off-state current 2.5mA maximum, maximum inrush current 250mA, LED status indication of each point, ambient operating temperature of 32°F to 140°F, UL Listed.

JJ. Discrete Output Module

Operating voltage of 5 to 265 VAC at 47 to 63 Hz / 5 to 125 VDC, backplane current draw at 5 VDC = 205 mA, at 24VDC = 180mA, off-state current leakage is 1.0mA, LED status indication of each point, ambient operating temperature of 32°F to 140°F, UL Listed.

KK. Analog Input Module

Backplane current draw at 5 VDC = 120mA, at 24VDC = 70mA, LED status indication of each point, ambient operating temperature of 32°F to 140°F, UL Listed.

LL. Analog Output Module

Backplane current draw at 5 VDC = 120mA, at 24VDC = 170mA, LED status indication of each point, ambient operating temperature of 32°F to 140°F, UL Listed.

MM. Ethernet Switch

An unmanaged Ethernet switch shall be provided inside the control enclosure to provide connectivity between the PLC, operator interface and plant networking. The switch shall support both 10 and 100 Mbit/s operation. The switch shall have five (5) 10/100Base-T ports with RJ-45 sockets and shall support auto-crossing, auto-negotiation, and auto-polarity. Maximum distance between devices shall be 100m. The unit shall be DIN rail mounted and require 24VDC power. Diagnostic LEDs for power and connection status shall be included.

NN. Remote Ethernet Access Gateway

A UL marked, remote access VPN gateway shall be supplied to securely connect to a PLC via the Internet using an Ethernet port and a secure VPN tunnel. The gateway can be DIN rail or wall screw mounting and shall provide WAN/LAN 10/100 Mb Ethernet ports.

OO. Human Machine Interface

The operator interface shall be a NEMA Type 12, 13, 4X rated, 6.5” diagonal, color touchscreen display with Ethernet and serial communications. The interface shall be a liquid crystal display (LCD). The display type shall be color active matrix thin-film transistor (TFT) with 640 x 480-pixel resolution. The rated operating temperature shall be 32° to 131°F (0° to 55°C). The operator interface shall be an Allen Bradley PanelView Plus 7 series A with VNC enabled for remote viewing and control

PART 3 - EXECUTION

3.01 FINAL ACCEPTANCE

A. After installation of the system and checkout by the OWNER, ENGINEER and the SBR Manufacturer, a controls certification test shall be performed per the agreed upon testing protocol, shown below. This protocol will test the operation of the entire WWTP control network and SCADA System, and provide confirmation that they will perform as required. This testing will be accomplished with the aid of simulation software and real-world operation to demonstrate the operation of the system in all modes. A copy of this testing protocol shall be provided to the ENGINEER and the OWNER a minimum of two weeks prior to the test. The test shall be completed per the protocol. Any defects or problems will be addressed and a timeframe to resolve the problem will be identified. The operational demonstration shall confirm the SBR control system, alarms and status are functioning as specified. If additional time or tests are needed due to improper function of the SBR control system or equipment provided by the SBR Manufacturer, the SBR Manufacturer shall correct the defects or problems at no cost/fee to the OWNER.

B. The Controls System will be tested during the SBR Manufacturer field service representative's startup trip, and will be performed by the SBR Manufacturer field service representative. The Engineer, Installing Contractor and the Owner shall have the right to witness the test.

Protocol:

The controls field performance test shall be performed by the SBR Manufacturer Systems' field service representative as follows:

1. Confirm that all leads are connected to the proper terminals.
2. Verify that the PLC battery is installed. If memory module is required, confirm installation and setup.
3. Verify operation of input devices through PLC including spares.
4. Verify analog inputs and outputs have been simulated and verified in the PLC.
5. Verify Operation of output devices through PLC
6. Verify all PLC/Module software is setup correctly
7. Program operates correctly when PLC is placed in "Run" mode
8. Check the HMI to verify that each input and reading is correct. This test shall be performed on each screen and will confirm that the input addresses are correct.
9. Check communication between PLC and other vendor PLCs
10. Check communication between PLC and SCADA system
11. Verify SCADA input, readings, and addresses are correct. This test shall be performed on each graphical screen.

The Next steps will be accomplished by utilizing an operational simulator and speeding up the actual times of each phase to mimic true operation of the system.

12. Verify operation of Mix-Fill phase.
    - End of Decant phase interval initiate
    - Cycle reset initiate
    - Verify equipment states are correct throughout the cycle

13. Verify operation of React-Fill phase.
    - End of Mix-Fill phase interval initiate
    - Verify equipment states are correct throughout the cycle
14. Verify operation of React phase.
    - End of React-Fill phase interval initiate
    - Verify equipment states are correct throughout the cycle
15. Verify operation of Settle phase.
    - End of React phase interval initiate
    - Verify equipment states are correct throughout the cycle
16. Verify operation of Decant phase.
    - End of Settle phase interval initiate
    - Verify idle with end decant level input actuation
    - Verify equipment states are correct throughout the cycle
17. Verify operation of Sludge Waste sequence.
    - Applied at end of Decant phase
    - Verify sludge waste phase disables with digester high level alarm (If applicable)
    - Verify equipment states are correct throughout the cycle
18. Verify operation of Storm Mode.
    - Verify storm mode operation in each SBR mode (single, dual, etc.)
    - Verify equipment states are correct throughout the cycle
19. Verify operation of batch reactor blowers/aerators.
    - Timing cycle
    - D.O. mode (if applicable)
20. Verify operation of Auxiliary systems and components.
    - Post Equalization Basin
    - Aerobic Digester
    - Bar Screens
    - Bagger Dewatering Equipment
    - Etc.
21. Verify elapsed time meters function and can be individually reset.
    - Blower(s) run time
    - Sludge pump(s) run time
    - Mixer(s) run time
    - Auxiliary motors run time
22. Verify alarm acknowledge and reset for all conditions. Detailed alarm list is included in the control description.
23. Verify settings of all default values. See the control description.
24. Verify Power cycle does not affect modified values under normal conditions and resets defaults when battery is low or operator requests it.
25. Verify all safety and wiring channels covers are in place.
26. Verify all wiring connections are secure and tight.

27. Verify panel is free of debris and clean
28. Errors or alarms caused by equipment not supplied by SBR Manufacturer shall not affect the pass/fail results of the SBR Manufacturer Control Panel.
29. The equipment is installed, operated, and maintained in full accordance with instructions provided by SBR Manufacturer in the Operation and Maintenance Manual
30. The equipment has been paid for in full in accordance with the terms of the contract.
31. The controls testing requirement shall no longer be applicable or valid if any product supplied by SBR Manufacturer is modified or altered without the written approval of SBR Manufacturer, including any software program.
32. In the event of failure of the equipment to complete the test as proposed above, SBR Manufacturer shall have the option to modify the equipment, programming, and controls as necessary to achieve the guaranteed performance testing. The maximum liability to SBR Manufacturer for the modification or supply of additional equipment shall be limited to 100% of the initial sales price of the equipment supplied.

C. Reporting of Results:

SBR manufacturer shall provide certification once any errors are corrected and the control system has passed the above field tests.

3.02 SPARE PARTS

A. Provide the OWNER with a list of the manufacturers' recommended spare parts.

END OF SECTION

SECTION 46 7600 – DEWATERING EQUIPMENT

PART 1 – GENERAL

1.01 THE REQUIREMENT

A. The Contractor shall furnish and install a new factory-built Sludge Bagger System, one (1) dry polymer mixing and dosing system, one (1) sludge feed pump, and one (1) local control panel, complete and operable with all necessary parts and accessories. The Sludge Bagger System shall have the capacity to receive 1,028 gallons per day of sludge at a maximum nominal feed concentration of 1.5% dry solids generated by a 90,000 GPD wastewater treatment plant.

B. Unless specifically indicated otherwise, the arrangement of equipment shown on the Drawings is based upon information available at the time of design and is not intended to show exact dimensions particular to a specific

1.02 The Manufacturer shall certify to not less than five (5) years of experience in the application, design, construction, and operation of Sludge Bagger Systems of the type specified in this Section. The Manufacturer shall produce a list of not less than ten (10) operating installations as evidence of meeting the experience requirement.

1.03 SUBMITTALS

A. Submittals shall be furnished in accordance with Section 01 3300 – Submittal Procedures.

1.04 OPERATION AND MAINTENANCE MANUALS

A. The Manufacturer shall provide Operation and Maintenance Manual hard copies and electronic version in PDF format for the Sludge Bagger System and all system components.

B. Operation and Maintenance Manuals shall be furnished in accordance with these Specifications.

1.05 QUALITY ASSURANCE

A. The Manufacturer(s) shall provide a 2-year equipment warranty.

1.06 SPARE PARTS

A. Manufacturer shall provide all spare parts anticipated to be required for the first 2 years of operation. Manufacturer shall clearly define quantity and description of part and associated part numbers as part of Manufacturer’s scope of supply.

B. Spare parts shall be placed in a separate container clearly marked as “Spare Parts.” All parts shall be identified and clearly labeled with applicable part numbers.

PART 2– PRODUCTS

2.01 GENERAL

A. The Sludge Bagger System and all components and accessories shall be designed for a covered outdoor service.

B. The Sludge Bagger System shall accommodate 8 bags during normal operation.

C. Throttling polymer dosage by use of valves is not acceptable.

2.02 POLYMER DOSING SYSTEM

A. Furnish and install one (1) polymer mixing unit designed to prepare, age, and feed dry type polymer.
   1. The polymer mixing unit shall include one (1) polymer mixing tank with stand, one (1) mixer, one (1) polymer feed pump, and one (1) static mixer assembly with polymer injection ring and distribution manifold.

B. The polymer mixing tank shall double as a polymer storage tank, and shall be 2'-4" diameter x 3'-6" sidewall height with a nominal 100 gal. working capacity. The tank shall be polyethylene construction and have a flat bottom and 1'-2" IPS half-coupling in the center bottom for discharge and drain.

C. The polymer mixer shall be portable clamp-mount propeller type with ¾" dia. Stainless steel shaft and single propeller designed to operate at 400 RPM. The mixer shall have a ¼ HP TEFC motor designed for 120-volt, single phase, 60 HZ service. The polymer mixer shall include an extension cord with ground and on-off toggle switch, operated from the control panel.

D. The tank stand shall be rigid stainless-steel construction and shall include a base on which the polymer fed pump shall be mounted. Supports for the clamp-mounted type mixer and control panel shall also be provided.

E. The polymer feed pump shall be a diaphragm-type capable of pumping water at a rate up to 4.8 GPM and shall be furnished with a TEFC 115-volt AC motor. Motor speed shall be controlled by an AC speed control unit mounted in the control panel. Pump wetted parts shall be reinforced nylon and EPDM elastomer.

F. The static mixing assembly shall be affixed to the outside of the polymer system and shall mix the polymer solution and sludge together. No piping shall be located inside the polymer tank. At the point of initial mixing, there shall be a polymer injection rink with four (4) polymer injection points for complete blending of polymer and sludge. Supplied with the injection ring shall be a polymer injection manifold with four (4) hoses to the polymer injection ring.

G. Acceptable Manufacturers:
   1. Prominent;
   2. Watson-Marlow Inc.;
   3. Or ENGINEER-approved equal.

2.03 SLUDGE FEED PUMP

A. The sludge feed pump shall be a rotary lobe type pump. The sludge feed pump shall be rated to deliver 20 GPM @ 40 ft TDH and designed to handle a 3/8" maximum particle size. Pump housing shall be cast iron.

B. The drive unit shall be a 3 HP TEFC NEMA motor designed to operate on 120-volt, single phase, 60 Hz service.

C. Acceptable Manufacturers:
   1. Boerger;
   2. LobePro;
   3. Or ENGINEER-approved equal.

2.04 SLUDGE DISTRIBUTION & BAGGING UNIT

A. The sludge distribution and bagging device shall be entirely 304 stainless steel construction. The frame shall be a minimum 1'-1/2" sq. tubing and the open-top plenum shall be a minimum 14 ga. sheet.

B. Funnels attached to the bottom side of the feed plenum shall be nominal 10” dia. and shall be provided with quick-opening clamps for the bag holders on each unit.

C. A quick-opening containment cage shall be provided for each bag. The cage shall be designed to allow free release of the filtrate while providing support for the bag.

D. The top of the plenum shall be covered to protect level proves and plenum walls and floor from rain and light exposure.

E. The plenum shall be provided with a 2” flange for connection of the sludge feed, a 3” connection for the PVC overflow pipe and mounting bracket for the level control system.

F. The plenum shall be provided with a floatless conductivity-type liquid level control system with PVC-coated stainless steel proves and C.I electrode holder mounted on an adjustable bracket.

G. A minimum 14 ga. 304 stainless steel filtrate collection pan shall be provided to collect and direct filtrate to a 3” plain end drain pipe.

H. Suitable stainless-steel members shall be provided to serve as supports for the bags and to permit the forks of the bag cart to be placed under each bag before the holder is opened.

I. Acceptable Manufacturers
   1. Envirodyne;
   2. Charter Machine Company;
   3. Or ENGINEER-approved equal.

2.05 SLUDGE BAGS

A. A quantity of 200 bags shall be provided along with the unit.

B. Each bag shall be nominal 22.5-gallon capacity made of porous synthetic material resistant to tears & breaks.

C. Bag ties and a spring-return ratchet twister shall be provided to close the bags after they have been filled with sludge.

D. Acceptable Manufacturers
   1. Envirodyne;
   2. Or ENGINEER-approved equal.

2.06 BAG CART

A. The bag cart shall be a dual wheel dolly designed with foot operated hydraulic fork lift arrangement to permit easy removal of filled bags from the dewatering unit.

B. Cart shall be carbon steel construction with epoxy paint finish.

C. Acceptable Manufacturers
   1. Envirodyne;
   2. Or ENGINEER-approved equal.

2.07 CONTROL PANEL

A. A single control panel integrating the Sludge Bagger System controls shall be furnished and installed at the dewatering area canopy and provided with a Unistrut support to be free standing from the other equipment or structures.

B. The control panel shall be NEMA 4X FRP enclosure, pre-assembled and pre-wired with terminal strips for connection of control wiring by others.

C. The panel shall be provided with a 480-volt, 3-phase, 60 HZ, 20-amp service.

D. The VENDOR shall provide a 120-volt, 1-phase, 60 HZ step-down transformer in accordance with UL & NEC requirements and shall have the appropriate label attached thereto.

E. The control panel shall include all necessary controls for operation of the Sludge Bagger System and shall provide for “manual/automatic” operation with interlocks and relays as required to automatically control the “failure” shutdowns.

F. All components of the panel shall be UL-listed and of heavy-duty industrial quality as manufactured by Hoffman, GE, Square D, Allen-Bradley, Siemens, or Engineer approved equal.

G. Signals:
   1. The control panel shall receive a signal from the SBR Control Panel when the Aerobic Digester begins wasting sludge. This signal shall initiate polymer mixing and dosing, and open any valves that regulate sludge distribution to the bagging system. The control panel need not send nor receive any other signals from other process areas.
   2. The control panel shall monitor and regulate the polymer dosing rate and all other local functions of the sludge bagging system, polymer system and sludge pump.

PART 3 – EXECUTION

3.01 MANUFACTURER’S SERVICES

A. Inspection, Startup, and Field Adjustment: The service representative of the Manufacturer shall be present at the Site to furnish the field services required as specified herein.

B. Services of the Manufacturer shall be in accordance with these Specifications.

C. Manufacturer shall define quantity of trips and days on site necessary to perform the specified services as a part of the Manufacturer’s scope of supply. Scope of supply shall be inclusive of travel and living expenses.

D. Upon completion of field services, the representative of the Manufacturer shall prepare and submit a report in accordance with the requirements of these Specifications.

3.02 INSTALLATION

A. Contractor shall install the equipment in accordance with installation requirements of these Specifications.

END OF SECTION

Appendix A – Geotechnical Report

Western Technologies Inc.

GEOTECHNICAL EVALUATION REPORT

JEROME WWTP UPGRADES
Jerome, Arizona
WT Reference No. 2522JW197

PREPARED FOR:
Pace Advanced Water Engineering
P.O. Box 4805
Scottsdale, Arizona 85261
Attn: Ms. Andrea Jaycox, Senior Project Coordinator

October 25, 2022

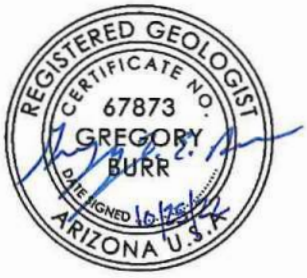

Gregory L. E. Burr, R.G., E.I.T.
Director of Geotechnical Services



Craig P. Wiedeman, P.E.
Senior Geotechnical Engineer

Western Technologies Inc.
The Quality People
Since 1955

2400 East Huntington Drive
Flagstaff, Arizona 86004-8934
(928) 774-8700 • fax 774-6469

October 25, 2022

Pace Advanced Water Engineering
P.O. Box 4805
Scottsdale, Arizona 85261

Attn: Ms. Andrea Jaycox, Senior Project Coordinator

Re: Geotechnical Evaluation
Jerome WWTP Upgrades
Jerome, Arizona

Job No. 2522JW197

Western Technologies Inc. has completed the geotechnical evaluation for the waste water treatment plant upgrades and new wastewater pipeline to be located in Jerome, Arizona. This study was performed in general accordance with our proposal number 2522PW253 dated June 15, 2022. The results of our study, including the boring/test pit location diagrams, laboratory test results, boring/test pit logs, and the geotechnical recommendations are attached.

We have appreciated being of service to you in the geotechnical engineering phase of this project and are prepared to assist you during the construction phases as well. If design conditions change, or if you have any questions concerning this report or any of our testing, inspection, design and consulting services, please do not hesitate to contact us. We look forward to working with you on future projects.

Sincerely,
WESTERN TECHNOLOGIES, INC.
Geotechnical Engineering Services

Gregory L. E. Burr, R.G., E.I.T.
Director of Geotechnical Services

Copies to: Addressee (emailed)

TABLE OF CONTENTS

1.0 PURPOSE 1

2.0 PROJECT DESCRIPTION 1

3.0 SCOPE OF SERVICES 2
3.1 Field Exploration 2
3.2 Laboratory Analyses 2
3.3 Analyses and Report 3

4.0 SITE CONDITIONS 3
4.1 Surface 3
4.2 Subsurface 4

5.0 GEOTECHNICAL PROPERTIES 4

6.0 RECOMMENDATIONS 4
6.1 General 4
6.2 Design Considerations 5
6.3 Tank Foundations 5
6.4 Manhole Foundations 6
6.5 Lateral Design Criteria for Thrust Blocks 6
6.6 Conventional Spread Footings 6
6.7 Lateral Design Criteria 7
6.8 Seismic Considerations 8
6.9 Slab-on-Grade Support 9
6.10 Drainage 10
6.11 Aggregate-Surfaced Roadways 10
6.12 Corrosivity 10

7.0 EARTHWORK 11
7.1 General 11
7.2 Site Clearing 11
7.3 Excavation 11
7.4 Tank Pad Preparation 12
7.5 Spread Footing Foundation Preparation 12
7.6 Slab-on-Grade Preparation 12
7.7 Exterior Slab Preparation 13
7.8 Materials 14
7.9 Placement and Compaction 15
7.10 Compliance 16

8.0 ADDITIONAL SERVICES 16

9.0 LIMITATIONS 17

10.0 CLOSURE 17

TABLE OF CONTENTS (Continued)

TEST PIT/BORING LOCATION DIAGRAMS..... Plates 1 and 2

APPENDIX A
Definition of Terminology..... A-1
Method of Soil Classification..... A-2
Test Pit/Boring Log Notes..... A-3
Test Pit/Boring Logs.....A-4 to A-16

APPENDIX B
Laboratory Tests.....B-1 to B-5

GEOTECHNICAL EVALUATION
JEROME WWTP UPGRADES
JEROME, ARIZONA
JOB NO. 2522JW197

1.0 PURPOSE

This report contains the results of our geotechnical evaluation for the proposed WWTP upgrades and new wastewater pipeline to be located at the existing wastewater treatment plant in Jerome, Arizona. The purpose of these services is to provide information and recommendations regarding:

- foundation design parameters
- slab-on-grade
- lateral earth pressures
- excavation conditions
- earthwork, including backfill placement, and suitability of existing soils for backfill materials
- drainage
- corrosivity
- on-site aggregate surfacing

Results of the field exploration, field tests, and laboratory testing program are presented in the Appendices.

2.0 PROJECT DESCRIPTION

Based on the revised information provided by Ms. Andrea Jaycox, Senior Project Coordinator, the proposed project will consist of approximately 2,400 linear feet of wastewater line, a new SBR Package Plant, and new primary settling and headworks tanks. The structures will be concrete and/or masonry construction with slab-on-grade floors. Maximum wall and column loads for the structures are assumed to be 3 kips per linear foot and 45 kips, respectively. The wastewater line invert elevations will be a maximum of 10 feet below the lowest existing site grades. We anticipate no extraordinary slab-on-grade criteria and that the finished structure bottom levels will be within about 2 to 3 feet of the existing site grades. In addition, approximately 2,000 linear feet of the existing access road will be resurfaced, widened, and additional pull-outs will be constructed. Should any of our information or assumptions not be correct, we request that the Client notify WT immediately.

3.0 SCOPE OF SERVICES

3.1 Field Exploration

Seven test pits and six borings were excavated/hand-auger drilled to depths of about 1 to 8 feet below the existing site grades at the approximate locations shown on the attached test pit/boring location diagrams. In addition, two samples of on-site rock were obtained for unit weight and unconfined compressive strength testing.

Logs of the test pits/borings are presented in Appendix A. Subsoils encountered during excavating/drilling were examined visually and sampled at selected depth intervals. A field log was prepared for each test pit/boring. These logs contain visual classifications of the materials encountered during excavation/drilling as well as interpolation of the subsurface conditions between samples. Final logs, included in Appendix A, represent our interpretation of the field logs and include modifications based on laboratory observations and tests of the field samples.

The final logs describe the materials encountered, their thicknesses, and the locations where samples were obtained. The Unified Soil Classification System was used to classify soils. The soil classification symbols appear on the test pit/boring logs and are briefly described in Appendix A. Local and regional geologic characteristics were used to estimate the seismic design criteria.

3.2 Laboratory Analyses

Laboratory analyses were performed on representative samples to aid in material classification and to estimate pertinent engineering properties of the on-site materials for preparation of this report. Testing was performed in general accordance with applicable ASTM and Arizona methods. The following tests were performed and the results are presented in Appendix B.

- Water content
- Dry density
- Remolded expansion potential
- Maximum density/optimum moisture
- Gradation
- Plasticity
- Soluble salts/sulfates/chlorides

- Corrosivity (ASTM A674)
- Unconfined compressive strength (rock)
- Unit weight (rock)

Test results were utilized in the development of the recommendations contained in this report.

3.3 Analyses and Report

This geotechnical engineering report includes a description of the project, a discussion of the field and laboratory testing programs, a discussion of the subsurface conditions, and design recommendations as appropriate to the purpose. The scope of services for this project does not include, either specifically or by implication, any environmental assessment of the site, discovery of underground storage tanks or other underground structures, or identification of contaminated or hazardous materials or conditions. If there is concern about the potential for such contamination, other studies should be undertaken. We are available to discuss the scope of such studies with you.

4.0 SITE CONDITIONS

4.1 Surface

At the time of our field exploration, the site was a developed wastewater treatment plant. The exteriors of existing structures appeared to be in good to fair condition. The site is bordered on the east by the existing aggregate surfaced access road to the plant, and on all other sides by northeast-southwest oriented Bitter Creek that is about 50 to 100 feet wide and 20 to 30 feet deep that directs flow to the northeast. The ground surface was relatively flat in the developed portions of the site, steep to very steep surrounding the developed areas, and contained a sparse to moderate growth of native juniper trees, bushes, cacti, grasses and weeds. Surface drainage appeared to be fair to poor with some evidence of previous surface water ponding in the developed portions of the site, and good in the undeveloped portions of the site by means of surface sheet flow to the west and north down the existing slopes into Bitter Creek.

4.2 Subsurface

As presented on the test pit/boring logs, surface and subsoils extending to the full depth of exploration at all locations explored consisted of medium to near-high plasticity Clayey SANDS with variable amounts of gravel, Clayey GRAVELS with variable amounts of sand and non-plastic Silty GRAVELS with variable amounts of sand. All soils encountered contained random amounts of limestone cobbles and boulders. Refusal to excavator/auger penetration occurred in all test pits/borings at depths of about 1 to 8 feet on LIMESTONE or limestone cobbles and boulders. Groundwater was not encountered in any test pit/boring at the time of exploration. The logs in Appendix A show details of the subsurface conditions encountered during the field exploration.

The test pit/boring logs included in this report are indicators of subsurface conditions only at the specific location and date noted. Variations from the field conditions represented by the test pits/borings may become evident during construction. If variations appear, we should be contacted to re-evaluate our recommendations.

5.0 GEOTECHNICAL PROPERTIES

Near-surface soils range from non-plastic to near-high plasticity. The site soils exhibit moderate expansion potential when recompacted, confined by loads approximating floor loads and saturated in accordance with standard Arizona test methods. Slabs-on-grade supported on recompacted native soils have a moderate potential for heaving if the water content of the soil increases. The site soils were too granular to obtain samples suitable for compression testing. Two samples of the on-site rock were obtained for unit weight and unconfined compressive strength testing and the results are present in Appendix B.

6.0 RECOMMENDATIONS

6.1 General

Recommendations contained in this report are based on our understanding of the project criteria described in Section 2.0, **PROJECT DESCRIPTION**, and the assumption that the soil and subsurface conditions are those disclosed by the test pits/borings. Others may change the plans, final elevations, number and type of structures, foundation loads, and tank bottom levels during design or construction. Substantially different subsurface conditions

from those described herein may be encountered or become known. Any changes in the project criteria or subsurface conditions shall be brought to our attention in writing.

6.2 Design Considerations

Existing fill was not encountered in the test pits/borings, but was observed on the site. We understand that no documentation is available regarding any field density testing that may have been performed during fill construction. Based on this lack of documentation and the overall condition of the fill observed, we consider the fill to be uncontrolled and recommend removal of existing fill in all structural areas.

Several of the test pits/borings indicate the presence of medium to near-high plasticity clayey soils on the site. These soils will expand or swell with an increase in moisture content. The structures and related improvements situated on expansive soils will be subject to movements if the foundation soils experience an increase in moisture content. It should be understood that if moisture penetrates expansive soils, there will likely be heave and possible resultant cracking/distress of the proposed structures and related improvements. It should be noted that shallow foundation systems are not designed to resist soil movements resulting from sewer or plumbing leaks, excessive or leaking irrigation systems, poor drainage, or water ponding near the structures. Construction of site fences, screen walls and other miscellaneous improvements such as exterior slabs-on-grade that typically fall under building code guidelines will be susceptible to heave as well.

Cobbles and boulders were encountered in the test pits/borings. These oversized materials, greater than 3 inches, could present construction difficulties for foundation, utility trenches and other excavations. In cut areas and excavations, exposed oversized materials should be removed.

6.3 Tank Foundations

Above-ground tanks may be supported on compacted aggregate underlain by a minimum thickness of 1 foot of site soils removed and replaced with properly compacted, imported engineered fill material. Below-ground tanks may be supported on scarified and recompacted native soils. Any existing fill should be removed in all proposed tank areas. The tank pads, prepared as recommended in the **EARTHWORK** section of the report, will be suitable to support a maximum dead plus live-load pressure of up to 3000 pounds per square foot. We anticipate that total and differential movements of the proposed above-ground tank structures, supported as recommended, should be within tolerable limits of

the tank manufacturer, typically uniform settlement of less than 2 inches and differential settlement less than 0.5-inch per 32 feet of circumference. Total and differential movements of the proposed below-ground tank structures, supported as recommended, are anticipated to be 1 inch and 3/4 inch, respectively. Additional foundation movements could occur if water from any source infiltrates the foundation soils. Therefore, proper drainage should be provided in the final design and during construction.

We recommend that the geotechnical engineer or his representative observe the tank pad preparation. It should be determined whether the materials exposed are similar to those anticipated for support of the tanks. Any soft, loose or unacceptable materials should be undercut to suitable materials and backfilled with engineered fill material.

6.4 Manhole Foundations

The soils encountered along the alignment are expected to have moderate to high bearing capacity at anticipated manhole foundation depths. Other than removal of any soft, loose, unstable or disturbed materials from beneath manhole foundations, specialized treatment of soils beneath manholes is not anticipated.

6.5 Lateral Design Criteria for Thrust Blocks

For any thrust block design, lateral loads may be resisted using a soil bearing pressure of 2500 pounds per square foot (psf). All fill against or around thrust blocks should be compacted to densities specified herein under **Placement and Compaction**.

6.6 Conventional Spread Footings

If conventional spread footings are used, they should be underlain by a minimum thickness of 1 foot of lean mix (2-sack) concrete backfill. Footings should bear at least 2 feet below the lowest adjacent finished grade. Footings may be designed to impose a maximum dead plus live-load pressure of up to 2500 pounds per square foot.

We anticipate that total movement of the proposed structures, supported as recommended, should be less than 1 inch. Differential movement should be less than ¾ inch. Additional foundation movements could occur if water from any source infiltrates the foundation soils. Therefore, proper drainage should be provided in the final design and during construction.

Finished grade is the lowest adjacent grade for perimeter footings and floor level for interior footings. The design bearing capacity applies to dead loads plus design live load conditions. Recommended minimum widths of column and wall footings are 24 inches and 16 inches, respectively. The bearing value given is a net bearing value and the weight of the concrete in the footings may be ignored.

All footings, stem walls and masonry walls should be reinforced to reduce the potential for distress caused by differential foundation movements. The use of joints at openings or other discontinuities in masonry walls is recommended.

We recommend that the geotechnical engineer or his representative observe the footing excavations before reinforcing steel and concrete are placed. It should be determined whether the soils exposed are similar to those anticipated for support of the footings. Any soft, loose or unacceptable soils should be undercut to suitable materials and backfilled with either lean mix or structural concrete.

6.7 Lateral Design Criteria

For retaining walls located above any free water surface with no surcharge loads, recommended equivalent fluid pressures and coefficients of base friction for unrestrained elements are:

- Active:
  Undisturbed subsoil .....38 psf/ft
  Compacted granular backfill .....30 psf/ft
  Compacted on-site soils (low expansive potential) .....38 psf/ft
  Clayey site soils ..... not recommended for use

- Passive:
  Shallow wall footings .....220 psf/ft
  Shallow column footings.....350 psf/ft
  Dense rock .....500 psf/ft

- Coefficient of base friction
  Soil.....0.35*
  Rock.....0.55

* The coefficient of base friction (soil) should be reduced to 0.25 when used in conjunction with passive pressure.

Where the design includes restrained elements, the following equivalent fluid pressures are recommended:

- At-rest:
  Undisturbed subsoil .....64 psf/ft
  Compacted granular backfill .....55 psf/ft

These lateral earth pressures are not applicable for submerged soils. We should be consulted for additional recommendations if such conditions are to be included in the design. Any surcharge from adjacent loadings must also be considered. Walls below grade should be waterproofed.

We recommend a free-draining soil layer or manufactured geocomposite material, be constructed adjacent to the back of the retaining wall. A filter may be required between the soil backfill and drainage layer. This drainage zone should help prevent hydrostatic pressure buildup. This vertical drain should be tied into a gravity drainage system at the base of the retaining wall. It is important that all backfill be properly placed and compacted. Backfill should be mechanically compacted in layers. Flooding or jetting should not be permitted. Care should be taken not to damage the walls when placing the backfill. Backfills should be inspected and tested during placement.

Fill against footings, stem walls and retaining walls should be compacted to densities specified in **EARTHWORK**. Medium to high plasticity clay soils should not be used as backfill against retaining walls. Compaction of each lift adjacent to walls should be accomplished with hand-operated tampers or other lightweight compactors. Overcompaction may cause excessive lateral earth pressures which could result in wall movements.

6.8 Seismic Considerations

Structures should be designed in accordance with applicable building codes. The seismic design parameters presented in the following table, in accordance with the 2018 International Building Code and ASCE 7-16, are applicable to the project site:

Seismic Design Parameters International Building Code 2018, ASCE 7-16	
Soil Site Class	C
Mapped Spectral Response Acceleration at 0.2 sec period (S_s)	0.31g
Mapped Spectral Response Acceleration at 1.0 sec period (S_1)	0.097g
Site Coefficient for 0.2 sec period (F_a)	1.3
Site Coefficient for 1.0 sec period (F_v)	1.5
Design Spectral Response Acceleration at 0.2 sec period (S_{DS})	0.269g
Design Spectral Response Acceleration at 1.0 sec period (S_{D1})	0.097g

The soil site class is based upon conditions identified in shallow exploratory test pits/borings and local knowledge of the geotechnical conditions in the vicinity of the site. Conditions extending beyond the depth of our test pits/borings to a depth of 100 feet were assumed for the purposes of providing the information presented in the table. Based upon the density of the on-site soils and lack of groundwater, the potential settlement and lateral spread due to liquefaction is not a considered to be a significant concern on the site.

6.9 Slab-on-Grade Support

Slabs-on-grade should be supported on a minimum thickness of 1 foot of properly placed and compacted, imported, low expansive, engineered fill. For design of interior slabs-on-grade, we recommend using a modulus of subgrade reaction (k) of 200 pounds per cubic inch (pci) for the on-site soils and 225 pci for imported fill material, based on a 30-inch diameter plate. The slab subgrade should be prepared by the procedures outlined in this report. A minimum 4-inch thick layer of base course should be provided beneath all slabs to help prevent capillary rise and a damp slab.

All concrete placement and curing operations should follow the American Concrete Institute manual recommendations. Improper curing techniques and/or high slump (water-cement ratio) could cause excessive shrinkage, cracking or curling. The plastic properties of the concrete should be documented at the time of placement and specimens should also be prepared for strength testing to verify compliance with project specifications. Concrete slabs should be allowed to cure adequately before placing vinyl or other moisture sensitive floor covering.

6.10 Drainage

The major cause of soil-related foundation and slab-on-ground problems is moisture increase in soils below structures. Properly functioning conventional foundations and floor slabs-on-ground require appropriately constructed and maintained site drainage conditions. Therefore, it is extremely important that positive drainage be provided during construction and maintained throughout the life of the structures. It is also important that proper planning and control of any landscape and irrigation practices be performed.

Infiltration of water into utility or foundation excavations must be prevented during construction. Backfill against footings, exterior walls, and in utility line trenches should be well compacted and free of all construction debris to minimize the possibility of moisture infiltration. If utility line trenches are backfilled with a granular material, then a clay or concrete plug should be placed in the trench adjacent to the structure to prevent water from following the trench back under the structure.

6.11 Aggregate-Surfaced Roadways

For unpaved sections, we recommend an initial minimum thickness of 6 inches of granular cover material. As with any unbound vehicular section, additional material will be required over time as cover material is lost due to grading, snow plowing, lateral shoving, and intrusion of the cover material into the underlying subgrade soils. To help reduce intrusion, consideration should be given to the use of a geotextile separator fabric placed at the cover material/subgrade soil interface.

6.12 Corrosivity

Based on the laboratory test results, the on-site soils exhibit a low to moderate corrosive potential to ductile iron piping. This information should be used as an aid in choosing the construction materials that will be in contact with these soils and that will need to be resistant to various corrosive forces. Manufacturers' representatives should be contacted regarding the specific corrosivity resistance for their particular product.

The chemical test results indicate that the soils at the site classify as moderately corrosive to concrete, Class S1 in accordance with ACI 318, Table 4.2.1. Concrete should be made with a cement that provides sulfate resistance and that has a maximum water-cementitious materials ratio and minimum compressive strength set forth in the provisions of ACI 318, Section 4.3.

7.0 EARTHWORK

7.1 General

The conclusions contained in this report for the proposed construction are contingent upon compliance with recommendations presented in this section. Any excavating, trenching, or disturbance which occurs after completion of the earthwork must be backfilled, compacted and tested in accordance with the recommendations contained herein. It is not reasonable to rely upon our conclusions and recommendations if any future unobserved and untested trenching, grading or backfilling occurs.

Although underground facilities were not observed, such features might be encountered during construction. These features should be demolished and removed in accordance with the recommendations of the geotechnical engineer. Any loose or disturbed soils resulting from demolition and/or removal of existing facilities should also be removed and/or recompacted as engineered fill, and any excavations should be backfilled in accordance with recommendations presented herein.

7.2 Site Clearing

Strip and remove all existing fill, remaining vegetation, debris, aggregate surfacing and/or concrete pavement and any other deleterious materials from the building, tank and wastewater line area. The building/tank area is defined as that area within the structure footprint plus 5 feet beyond the perimeter of the footprint. All exposed surfaces should be free of mounds and depressions which could prevent uniform compaction.

7.3 Excavation

We anticipate that excavations into the shallow site soils for the proposed construction can be accomplished with conventional equipment. Excavations penetrating the underlying limestone will require the use of heavy-duty, specialized equipment, likely together with large pneumatic hammers, to facilitate rock break-up and removal.

Cut slopes into the shallow on-site soils should be constructed no steeper than 1:1 (horizontal:vertical) and 0.5:1 (horizontal:vertical) in the limestone bedrock. Fill slopes should be constructed no steeper than 1.5:1 (horizontal:vertical) to limit erosion, and to provide slope protection. Natural slopes exceeding a 5:1 (horizontal:vertical) slope

configuration, should be benched prior to fill placement. Natural slopes which will support fill embankments should be benched at a maximum 5:1 slope.

On-site soils will pump or become unworkable at high water contents. Workability may be improved by scarifying and drying. Overexcavation of wet zones and replacement with drier granular materials may be necessary. The use of lightweight excavation and compaction equipment may be required to minimize subgrade pumping.

7.4 Tank Pad Preparation

Following removal of any existing fill material, above-ground tanks should be founded on a minimum thickness of 1 foot of imported, properly compacted, low expansive, engineered fill material. Remove existing soils to a minimum depth of 1 foot below the bottom of the above-ground tank elevation. Following the removal, and immediately below all below-grade tanks, scarify, moisten or dry as required, and compact all subgrade soils to a minimum depth of 8 inches. The subgrade preparation should be accomplished in a manner which will result in uniform water contents and densities after compaction. In areas where dense limestone is encountered, scarification and recompaction is not required.

7.5 Spread Footing Foundation Preparation

Following removal of any existing fill material in footing areas, remove existing soils to a minimum depth of 1 foot below the bottom of the footing. Removal may extend straight down along the sides of the footing. Replace the removed soils with properly consolidated, lean mix (2-sack) concrete backfill material.

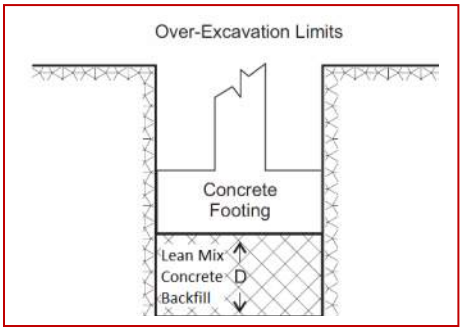

7.6 Slab-on-Grade Preparation

Following removal of any existing fill material, slabs-on-grade should be founded on a minimum thickness of 1 foot of imported, low expansive, engineered fill material. Remove native soils, as necessary, to a minimum depth of 1 foot below the bottom of the slab (depth D in the diagram below). Following the removal, scarify, moisten or dry as required, and compact all subgrade soils to a minimum depth of 8 inches. Replace the removed soils with properly compacted, imported, low to non-expansive, engineered fill material. The

aggregate base course below the slab may be included as part of the low to non-expansive engineered fill. In areas where dense limestone is encountered, scarification and recompaction is not required.

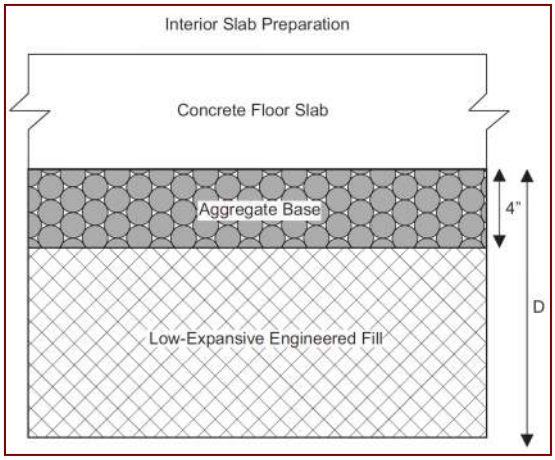

The subgrade preparation should be accomplished in a manner that will result in uniform water contents and densities after compaction.

7.7 Exterior Slab Preparation

The soils on this site have the potential to expand and shrink with changes in moisture content. In addition, frost penetration in the upper soils may cause surface heaving. Therefore, relatively lightweight exterior concrete flatwork such as sidewalks and patios may experience movements resulting in cracking or vertical offsets. To reduce the potential for damage, we recommend:

- Use of fill with low expansion potential
- Use of fill with low to negligible frost susceptibility
- Placement of effective control joints on relatively close centers
- Moisture-density control during placement of subbase fills
- Provision for adequate drainage in areas adjoining the slabs
- Use of designs which allow vertical movement between the exterior slabs and adjoining structural elements

It should be understood that these recommendations will help reduce the potential for soil movement and resulting distress, but will not eliminate this potential. Furthermore, the use of municipal specifications and details may not mitigate the potential for movements of the expansive or frost susceptible on-site soils.

7.8 Materials

a. Clean on-site native soils with a maximum dimension of 6 inches or imported materials may be used as fill material for the following:

- backfill (non-slab areas)
- Subbase fill in aggregate surfaced roadway areas

b. On-site clayey soils should not be used as subbase fill or backfill below any tanks, foundations, slabs-on-grade or behind any retaining walls. Imported soils with low expansive potential should be used in these areas.

c. Frozen soils should not be used as fill or backfill.

d. Lean mix (2-sack) concrete backfill should consist of aggregate base course type material combined with 2 sacks of cement per cubic yard. A coarse rock mix should not be used.

e. Imported soils should conform to the following:

- Gradation (ASTM C136): percent finer by weight

6"	100
4"	85-100
¾”	70-100
No. 4 Sieve	50-100
No. 200 Sieve	40 (max)

- Maximum expansive potential (%)[1] 1.5

- Maximum soluble sulfates (%) 0.10

f. Base course should conform to current Yavapai County specifications.

[1] Measured on a sample compacted to approximately 95 percent of the ASTM D698 maximum dry density at about 3 percent below optimum water content. The sample is confined under a 100 psf surcharge and submerged.

7.9 Placement and Compaction

a. Place and compact fill in horizontal lifts, using equipment and procedures that will produce recommended water contents and densities throughout the lift.

b. Uncompacted fill lifts should not exceed 8 inches.

c. Materials should be compacted to the following:

Material	Minimum Percent Compaction (ASTM D698)
• On-site soil, reworked:	
Below tanks	95
Below slabs-on-grade	90
Aggregate surfaced roadway areas	95
• On-site clayey soils, fill:	
Aggregate surfaced roadway areas	95
Landscape areas	85
• On-site low expansive potential soils, fill:	
Aggregate surfaced roadway areas	95
Below slabs-on-grade	95
Below tanks	95
• Imported soil, fill:	
Below slabs-on-grade	95
Below tanks	95
Aggregate surfaced roadway areas	95
• Aggregate base:	
Below slabs-on-grade	95
Below tanks	95
Aggregate surfaced roadway areas	100

Minimum Percent
Material Compaction (ASTM D698)

- Backfill:
  Structural 95
  Nonstructural 90

`

d. On-site soils should be compacted with a moisture content in the range of 1 percent below to 3 percent above optimum. Imported soils with low expansive potential and aggregate base course materials should be compacted with a moisture content in the range of 3 percent below to 3 percent above optimum.

7.10 Compliance

Recommendations for structural elements supported on compacted fills or prepared subgrade depend upon compliance with **EARTHWORK** recommendations. To assess compliance, observation and testing should be performed under the direction of a geotechnical engineer.

8.0 ADDITIONAL SERVICES

The recommendations provided in this report are based on the assumption that a sufficient schedule of tests and observations will be performed during construction to verify compliance. At a minimum, these tests and observations should be comprised of the following:

- Observations and testing during site preparation and earthwork;
- Observation of foundation excavations; and
- Consultation as may be required during construction.

Retaining the geotechnical engineer who developed your report to provide construction observation is the best way to verify compliance, and to help you manage the risks associated with unanticipated conditions.

9.0 LIMITATIONS

This report has been prepared assuming the project criteria described in Section 2.0. If changes in the project criteria occur, or if different subsurface conditions are encountered or become known, the conclusions and recommendations presented herein shall become invalid. In any such event, WT should be contacted in order to assess the effect that such variations may have on our conclusions and recommendations.

The recommendations presented are based entirely upon data derived from a limited number of samples obtained from widely spaced test pits/borings. The attached logs are indicators of subsurface conditions only at the specific locations and times noted. This report assumes the uniformity of the geology and soil structure between test pits/borings, however variations can and often do exist. Whenever any deviation, difference or change is encountered or becomes known, WT should be contacted.

This report is for the exclusive benefit of our client alone. There are no intended third-party beneficiaries of our contract with the client or this report, and nothing contained in the contract or this report shall create any express or implied contractual or any other relationship with, or claim or cause of action for, any third party against WT.

This report is valid for the earlier of one year from the date of issuance, a change in circumstances, or discovered variations. After expiration, no person or entity shall rely on this report without the express written authorization of WT.

10.0 CLOSURE

We prepared this report as an aid to the designers of the proposed project. The comments, statements, recommendations and conclusions set forth in this report reflect the opinions of the authors. These opinions are based upon data obtained at the location of the test pits/borings, and from laboratory tests. Work on your project was performed in accordance with generally accepted standards and practices utilized by professionals providing similar services in this locality. No other warranty, express or implied, is made.

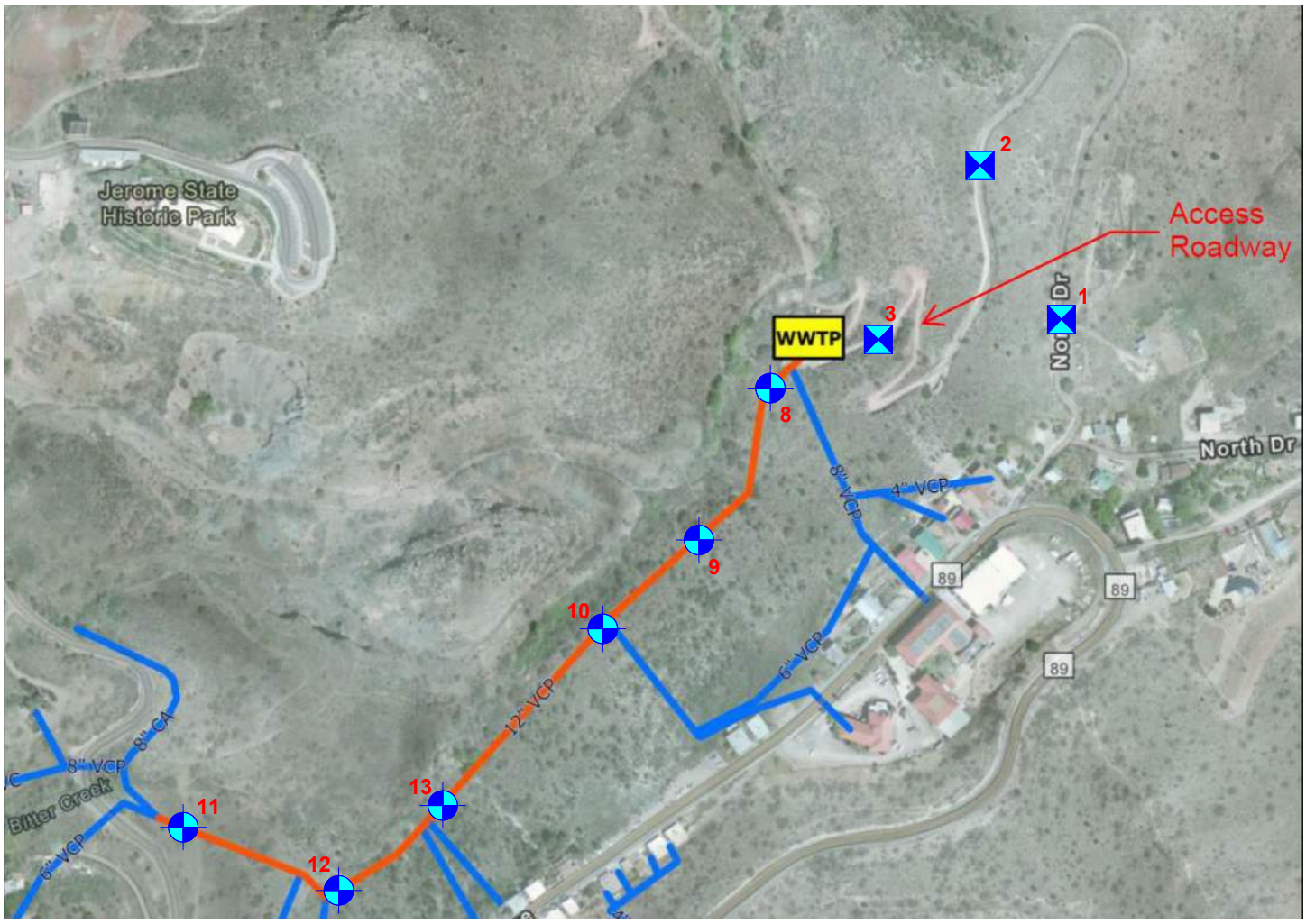

Not to Scale

Approximate Hand Auger Boring Location

Approximate Test Pit Location

JEROME WWTP UPGRADES	
Boring/Test Pit Location Diagram	
Western Technologies Inc.	
Job No.: 2522JW197	Plate: 1

Geotechnical Environmental Inspections Materials

Western Technologies Inc. The Quality People Since 1955

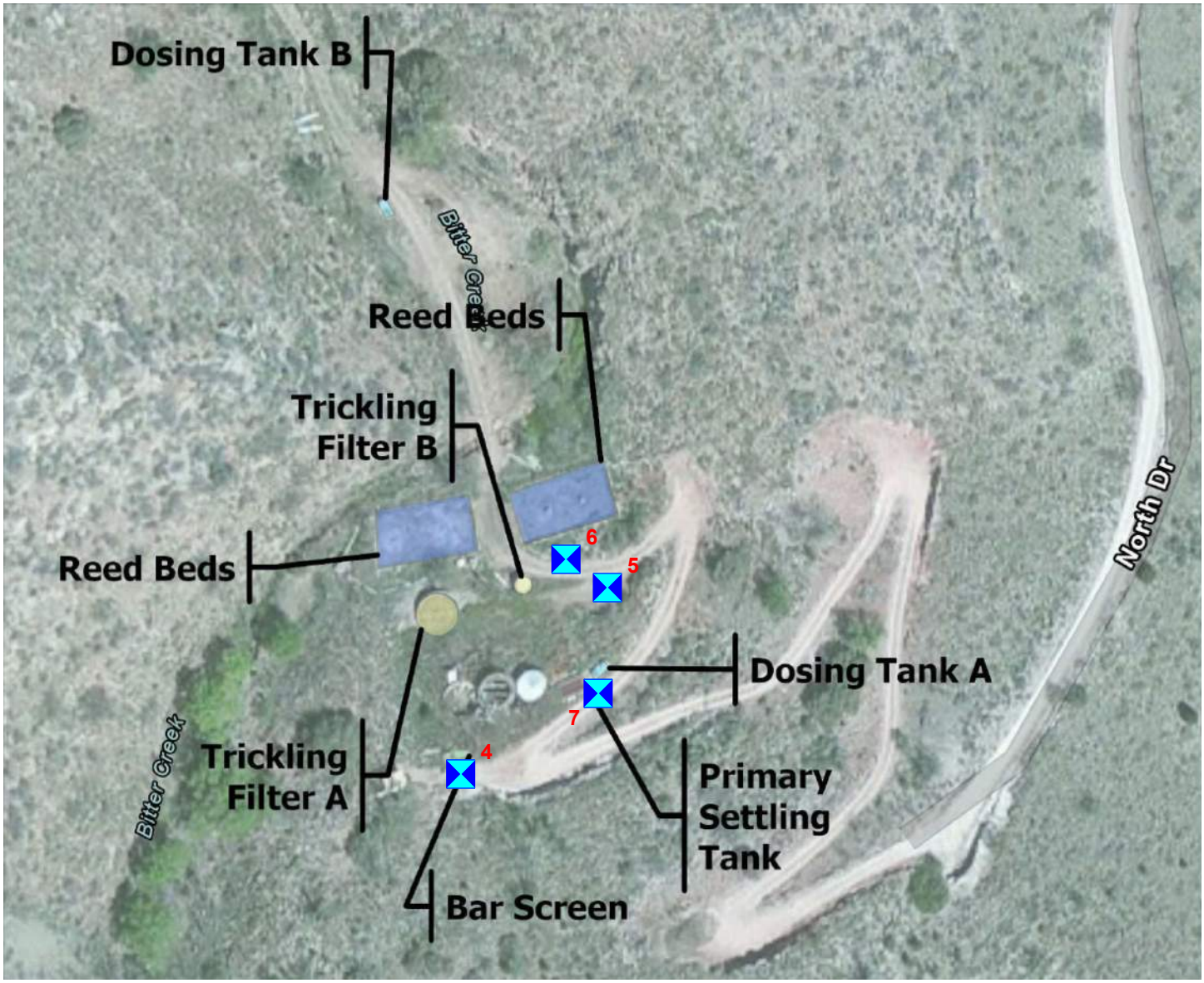

Not to Scale

Approximate Test Pit Location

JEROME WWTP UPGRADES

Test Pit Location Diagram

Western Technologies Inc.

Job No.: 2522JW197 | Plate: 2

Geotechnical Environmental Inspections Materials
Western Technologies Inc. The Quality People Since 1955

Allowable Soil Bearing Capacity	The recommended maximum contact stress developed at the interface of the foundation element and the supporting material.
Backfill	A specified material placed and compacted in a confined area.
Base Course	A layer of specified aggregate material placed on a subgrade or subbase.
Base Course Grade	Top of base course.
Bench	A horizontal surface in a sloped deposit.
Caisson/Drilled Shaft	A concrete foundation element cast in a circular excavation which may have an enlarged base (or belled caisson).
Concrete Slabs-On-Grade	A concrete surface layer cast directly upon base course, subbase or subgrade.
Crushed Rock Base Course	A base course composed of crushed rock of a specified gradation.
Differential Settlement	Unequal settlement between or within foundation elements of a structure.
Engineered Fill	Specified soil or aggregate material placed and compacted to specified density and/or moisture conditions under observations of a representative of a soil engineer.
Existing Fill	Materials deposited through the action of man prior to exploration of the site.
Existing Grade	The ground surface at the time of field exploration.
Expansive Potential	The potential of a soil to expand (increase in volume) due to absorption of moisture.
Fill	Materials deposited by the actions of man.
Finished Grade	The final grade created as a part of the project.
Gravel Base Course	A base course composed of naturally occurring gravel with a specified gradation.
Heave	Upward movement.
Native Grade	The naturally occurring ground surface.
Native Soil	Naturally occurring on-site soil.
Rock	A natural aggregate of mineral grains connected by strong and permanent cohesive forces. Usually requires drilling, wedging, blasting or other methods of extraordinary force for excavation.
Sand and Gravel Base Course	A base course of sand and gravel of a specified gradation.
Sand Base Course	A base course composed primarily of sand of a specified gradation.
Scarify	To mechanically loosen soil or break down existing soil structure.
Settlement	Downward movement.
Soil	Any unconsolidated material composed of discrete solid particles, derived from the physical and/or chemical disintegration of vegetable or mineral matter, which can be separated by gentle mechanical means such as agitation in water.
Strip	To remove from present location.
Subbase	A layer of specified material placed to form a layer between the subgrade and base course.
Subbase Grade	Top of subbase.
Subgrade	Prepared native soil surface.

©81WTI
091614

COARSE-GRAINED SOILS

LESS THAN 50% FINES

GROUP SYMBOLS	DESCRIPTION	MAJOR DIVISIONS
GW	WELL-GRADED GRAVEL OR WELL-GRADED GRAVEL WITH SAND, LESS THAN 5% FINES	GRAVELS MORE THAN HALF OF COARSE FRACTION IS LARGER THAN NO. 4 SIEVE SIZE
GP	POORLY-GRADED GRAVEL OR POORLY-GRADED GRAVEL WITH SAND, LESS THAN 5% FINES	
GM	SILTY GRAVEL OR SILTY GRAVEL WITH SAND, MORE THAN 12% FINES	
GC	CLAYEY GRAVEL OR CLAYEY GRAVEL WITH SAND, MORE THAN 12% FINES	
SW	WELL-GRADED SAND OR WELL-GRADED SAND WITH GRAVEL, LESS THAN 5% FINES	SANDS MORE THAN HALF OF COARSE FRACTION IS SMALLER THAN NO. 4 SIEVE SIZE
SP	POORLY-GRADED SAND OR POORLY-GRADED SAND WITH GRAVEL, LESS THAN 5% FINES	
SM	SILTY SAND OR SILTY SAND WITH GRAVEL, MORE THAN 12% FINES	
SC	CLAYEY SAND OR CLAYEY SAND WITH GRAVEL, MORE THAN 12% FINES	

NOTE: Coarse-grained soils receive dual symbols if they contain 5% to 12% fines (e.g., SW-SM, GP-GC).

FINE-GRAINED SOILS

MORE THAN 50% FINES

GROUP SYMBOLS	DESCRIPTION	MAJOR DIVISIONS
ML	SILT, SILT WITH SAND OR GRAVEL, SANDY SILT, OR GRAVELLY SILT	SILTS AND CLAYS LIQUID LIMIT LESS THAN 50
CL	LEAN CLAY OF LOW TO MEDIUM PLASTICITY, SANDY CLAY, OR GRAVELLY CLAY	
OL	ORGANIC SILT OR ORGANIC CLAY OF LOW TO MEDIUM PLASTICITY	
MH	ELASTIC SILT, SANDY ELASTIC SILT, OR GRAVELLY ELASTIC SILT	SILTS AND CLAYS LIQUID LIMIT MORE THAN 50
CH	FAT CLAY OF HIGH PLASTICITY, SANDY FAT CLAY, OR GRAVELLY FAT CLAY	
OH	ORGANIC SILT OR ORGANIC CLAY OF HIGH PLASTICITY	
PT	PEAT AND OTHER HIGHLY ORGANIC SOILS	HIGHLY ORGANIC SOILS

NOTE: Fine-grained soils may receive dual classification based upon plasticity characteristics (e.g. CL-ML).

SOIL SIZES

COMPONENT	SIZE RANGE
BOULDERS	Above 12 in.
COBBLES	3 in. – 12 in.
GRAVEL	No. 4 – 3 in.
Coarse	¾ in. – 3 in.
Fine	No. 4 – ¾ in.
SAND	No. 200 – No. 4
Coarse	No. 10 – No. 4
Medium	No. 40 – No. 10
Fine	No. 200 – No. 40
Fines (Silt or Clay)	Below No. 200

NOTE: Only sizes smaller than three inches are used to classify soils

CONSISTENCY

CLAYS & SILTS	BLOWS PER FOOT
VERY SOFT	0 – 2
SOFT	3 – 4
FIRM	5 – 8
STIFF	9 – 15
VERY STIFF	16 – 30
HARD	OVER 30

RELATIVE DENSITY

SANDS & GRAVELS	BLOWS PER FOOT
VERY LOOSE	0 – 4
LOOSE	5 – 10
MEDIUM DENSE	11 – 30
DENSE	31 – 50
VERY DENSE	OVER 50

NOTE: Number of blows using 140-pound hammer falling 30 inches to drive a 2-inch-OD (1⅜-inch ID) split-barrel sampler (ASTM D1586).

PLASTICITY OF FINE GRAINED SOILS

PLASTICITY INDEX	TERM
0	NON-PLASTIC
1 – 7	LOW
8 – 20	MEDIUM
Over 20	HIGH

DEFINITION OF WATER CONTENT

DRY
SLIGHTLY DAMP
DAMP
MOIST
WET
SATURATED

©81 WTI
090414

The number shown in **"BORING NO."** or "**TEST PIT NO.**" refers to the approximate location of the same number indicated on the "Boring/Test Pit Location Diagram" as positioned in the field by pacing or measurement from property lines and/or existing features.

"DRILLING TYPE" refers to the exploratory equipment used in the boring. Hand auger methods were used. The dimension presented is the outside diameter of the auger used.

"EQUIPMENT TYPE" refers to the equipment used in the excavation of the test pit, and may include the width of the bucket on the excavator and the use of "rock" teeth or attachments.

"SAMPLE TYPE" refers to the form of sample recovery, in which **R** = Ring-lined sample, **G** = Grab sample.

"DRY DENSITY (LBS/CU FT)" refers to the laboratory-determined dry density in pounds per cubic foot. The symbol **"NR"** indicates that no sample was recovered.

"WATER (MOISTURE) CONTENT (% OF DRY WT.)" refers to the laboratory-determined water content in percent using the standard test method ASTM D2216.

"USCS" refers to the "Unified Soil Classification System" Group Symbol for the soil type as defined by ASTM D2487 and D2488. The soils were classified visually in the field, and where appropriate, classifications were modified by visual examination of samples in the laboratory and/or by appropriate tests.

These notes and boring/test pit logs are intended for use in conjunction with the purposes of our services defined in the text. Boring/test pit log data should not be construed as part of the construction plans nor as defining construction conditions.

Boring/test pit logs depict our interpretations of subsurface conditions at the locations and on the date(s) noted. Variations in subsurface conditions and characteristics may occur between borings/test pits. Groundwater levels may fluctuate due to seasonal variations and other factors.

The stratification lines shown on the boring/test pit logs represent our interpretation of the approximate boundary between soil or rock types based upon visual field classification at the boring/test pit location. The transition between materials is approximate and may be more or less gradual than indicated.

©81WTI
091614

DATE EXCAVATED: **9-16-22**
LOCATION: **See Location Diagram**
ELEVATION: **Not Determined**

TEST PIT NO. 1

EQUIPMENT: **CASE 580N**
EXCAVATION TYPE: **24" BUCKET**
FIELD ENGINEER: **C. Bartlett**

MOISTURE CONTENT (% OF DRY WT.)	DRY DENSITY (LBS/CU FT)	SAMPLE TYPE	SAMPLE	BLOWS/FT.	DEPTH (FEET)	USCS	GRAPHIC	SOIL DESCRIPTION
		G				GM		AGGREGATE BASE COURSE (3 Inches Thick) Silty GRAVEL; with sand, cobbles and boulders, tan, slightly damp
					5			**Excavation Stopped at 5 Feet**
					10			

N- **STANDARD PENETRATION TEST**
R- **RING SAMPLE**
C- **CORE: %RECOVERY/RQD**
G- **GRAB SAMPLE**
B- **BUCKET SAMPLE**

NOTES: **Groundwater Not Encountered**

THIS SUMMARY APPLIES ONLY AT THIS LOCATION AND AT THE TIME OF LOGGING. CONDITIONS MAY DIFFER AT OTHER LOCATIONS AND MAY CHANGE AT THIS LOCATION WITH TIME. DATA PRESENTED IS A SIMPLIFICATION.

Geotechnical Environmental Inspections Materials
Western Technologies Inc. The Quality People Since 1955

PROJECT: **JEROME WWTP IMPROVEMENTS**
PROJECT NO.: **2522JW197**

PLATE **A-4**

TEST PIT LOG

DATE EXCAVATED: **9-16-22**
LOCATION: **See Location Diagram**
ELEVATION: **Not Determined**

TEST PIT NO. 2

EQUIPMENT: **CASE 580N**
EXCAVATION TYPE: **24" BUCKET**
FIELD ENGINEER: **C. Bartlett**

MOISTURE CONTENT (% OF DRY WT.)	DRY DENSITY (LBS/CU FT)	SAMPLE TYPE	SAMPLE	BLOWS/FT.	DEPTH (FEET)	USCS	GRAPHIC	SOIL DESCRIPTION
		G				SC		Clayey SAND; with gravel, cobbles and boulders, tan, slightly damp
4.4	87	R		Push				
					5			**Excavation Stopped at 5 Feet**
					10			

N- **STANDARD PENETRATION TEST**
R- **RING SAMPLE**
C- **CORE: %RECOVERY/RQD**
G- **GRAB SAMPLE**
B- **BUCKET SAMPLE**

NOTES: **Groundwater Not Encountered**

THIS SUMMARY APPLIES ONLY AT THIS LOCATION AND AT THE TIME OF LOGGING. CONDITIONS MAY DIFFER AT OTHER LOCATIONS AND MAY CHANGE AT THIS LOCATION WITH TIME. DATA PRESENTED IS A SIMPLIFICATION.

Geotechnical Environmental Inspections Materials

Western Technologies Inc. The Quality People Since 1955

PROJECT: **JEROME WWTP IMPROVEMENTS**
PROJECT NO.: **2522JW197**

PLATE **A-5**

TEST PIT LOG

DATE EXCAVATED: **9-16-22**
LOCATION: **See Location Diagram**
ELEVATION: **Not Determined**

TEST PIT NO. 3

EQUIPMENT: **CASE 580N**
EXCAVATION TYPE: **24" BUCKET**
FIELD ENGINEER: **C. Bartlett**

MOISTURE CONTENT (% OF DRY WT.)	DRY DENSITY (LBS/CU FT)	SAMPLE TYPE	SAMPLE	BLOWS/FT.	DEPTH (FEET)	USCS	GRAPHIC	SOIL DESCRIPTION
		G				GC		Clayey GRAVEL; with sand, cobbles and boulders, tan, slightly damp
3.4	99	R		Push				
					5			**Excavation Stopped at 5 Feet**
					10			

N- **STANDARD PENETRATION TEST**
R- **RING SAMPLE**
C- **CORE: %RECOVERY/RQD**
G- **GRAB SAMPLE**
B- **BUCKET SAMPLE**

NOTES: **Groundwater Not Encountered**

THIS SUMMARY APPLIES ONLY AT THIS LOCATION AND AT THE TIME OF LOGGING. CONDITIONS MAY DIFFER AT OTHER LOCATIONS AND MAY CHANGE AT THIS LOCATION WITH TIME. DATA PRESENTED IS A SIMPLIFICATION.

Geotechnical Environmental Inspections Materials

Western Technologies Inc. The Quality People Since 1955

PROJECT: **JEROME WWTP IMPROVEMENTS**
PROJECT NO.: **2522JW197**

PLATE **A-6**

TEST PIT LOG

DATE EXCAVATED: **9-16-22**
LOCATION: **See Location Diagram**
ELEVATION: **Not Determined**

TEST PIT NO. 4

EQUIPMENT: **CASE 580N**
EXCAVATION TYPE: **24" BUCKET**
FIELD ENGINEER: **C. Bartlett**

MOISTURE CONTENT (% OF DRY WT.)	DRY DENSITY (LBS/CU FT)	SAMPLE TYPE	SAMPLE	BLOWS/FT.	DEPTH (FEET)	USCS	GRAPHIC	SOIL DESCRIPTION
		G				GC		Clayey GRAVEL; with sand, cobbles and boulders, light brown, slightly damp
					5			**Excavator Refusal at 3 Feet on LIMESTONE**
					10			

N- **STANDARD PENETRATION TEST**
R- **RING SAMPLE**
C- **CORE: %RECOVERY/RQD**
G- **GRAB SAMPLE**
B- **BUCKET SAMPLE**

NOTES: **Groundwater Not Encountered**

THIS SUMMARY APPLIES ONLY AT THIS LOCATION AND AT THE TIME OF LOGGING. CONDITIONS MAY DIFFER AT OTHER LOCATIONS AND MAY CHANGE AT THIS LOCATION WITH TIME. DATA PRESENTED IS A SIMPLIFICATION.

Geotechnical Environmental Inspections Materials

Western Technologies Inc. The Quality People Since 1955

PROJECT: **JEROME WWTP IMPROVEMENTS**
PROJECT NO.: **2522JW197**

PLATE **A-7**

TEST PIT LOG

DATE EXCAVATED: **9-16-22**
LOCATION: **See Location Diagram**
ELEVATION: **Not Determined**

TEST PIT NO. 5

EQUIPMENT: **CASE 580N**
EXCAVATION TYPE: **24" BUCKET**
FIELD ENGINEER: **C. Bartlett**

MOISTURE CONTENT (% OF DRY WT.)	DRY DENSITY (LBS/CU FT)	SAMPLE TYPE	SAMPLE	BLOWS/FT.	DEPTH (FEET)	USCS	GRAPHIC	SOIL DESCRIPTION
		G			0	GC		Clayey GRAVEL; with sand, cobbles and boulders, brown, damp
					5			
					10			**Excavator Refusal at 8 Feet on LIMESTONE**

N- **STANDARD PENETRATION TEST**
R- **RING SAMPLE**
C- **CORE: %RECOVERY/RQD**
G- **GRAB SAMPLE**
B- **BUCKET SAMPLE**

NOTES: **Groundwater Not Encountered**

THIS SUMMARY APPLIES ONLY AT THIS LOCATION AND AT THE TIME OF LOGGING. CONDITIONS MAY DIFFER AT OTHER LOCATIONS AND MAY CHANGE AT THIS LOCATION WITH TIME. DATA PRESENTED IS A SIMPLIFICATION.

Geotechnical Environmental Inspections Materials
Western Technologies Inc. The Quality People Since 1955

PROJECT: **JEROME WWTP IMPROVEMENTS**
PROJECT NO.: **2522JW197**

PLATE **A-8**

TEST PIT LOG

DATE EXCAVATED: **9-16-22**
LOCATION: **See Location Diagram**
ELEVATION: **Not Determined**

TEST PIT NO. 6

EQUIPMENT: **CASE 580N**
EXCAVATION TYPE: **24" BUCKET**
FIELD ENGINEER: **C. Bartlett**

MOISTURE CONTENT (% OF DRY WT.)	DRY DENSITY (LBS/CU FT)	SAMPLE TYPE	SAMPLE	BLOWS/FT.	DEPTH (FEET)	USCS	GRAPHIC	SOIL DESCRIPTION
		G				GC		Clayey GRAVEL; with sand, cobbles and boulders, brown, damp
					5			
					10			**Excavator Refusal at 8 Feet on LIMESTONE**

N- **STANDARD PENETRATION TEST**
R- **RING SAMPLE**
C- **CORE: %RECOVERY/RQD**
G- **GRAB SAMPLE**
B- **BUCKET SAMPLE**

NOTES: **Groundwater Not Encountered**

THIS SUMMARY APPLIES ONLY AT THIS LOCATION AND AT THE TIME OF LOGGING. CONDITIONS MAY DIFFER AT OTHER LOCATIONS AND MAY CHANGE AT THIS LOCATION WITH TIME. DATA PRESENTED IS A SIMPLIFICATION.

Geotechnical Environmental Inspections Materials

Western Technologies Inc. The Quality People Since 1955

PROJECT: **JEROME WWTP IMPROVEMENTS**
PROJECT NO.: **2522JW197**

PLATE **A-9**

TEST PIT LOG

DATE EXCAVATED: **9-16-22**
LOCATION: **See Location Diagram**
ELEVATION: **Not Determined**

TEST PIT NO. 7

EQUIPMENT: **CASE 580N**
EXCAVATION TYPE: **24" BUCKET**
FIELD ENGINEER: **C. Bartlett**

MOISTURE CONTENT (% OF DRY WT.)	DRY DENSITY (LBS/CU FT)	SAMPLE TYPE	SAMPLE	BLOWS/FT.	DEPTH (FEET)	USCS	GRAPHIC	SOIL DESCRIPTION
		G				GC		Clayey GRAVEL; with sand, cobbles and boulders, brown, damp
					5			**Excavator Refusal at 5 Feet on LIMESTONE**
					10			

N- **STANDARD PENETRATION TEST**
R- **RING SAMPLE**
C- **CORE: %RECOVERY/RQD**
G- **GRAB SAMPLE**
B- **BUCKET SAMPLE**

NOTES: **Groundwater Not Encountered**

THIS SUMMARY APPLIES ONLY AT THIS LOCATION AND AT THE TIME OF LOGGING. CONDITIONS MAY DIFFER AT OTHER LOCATIONS AND MAY CHANGE AT THIS LOCATION WITH TIME. DATA PRESENTED IS A SIMPLIFICATION.

Geotechnical Environmental Inspections Materials
Western Technologies Inc. The Quality People Since 1955

PROJECT: **JEROME WWTP IMPROVEMENTS**
PROJECT NO.: **2522JW197**

PLATE **A-10**

TEST PIT LOG

DATE DRILLED: **9-16-22**
LOCATION: **See Location Diagram**
ELEVATION: **Not Determined**

BORING NO. 8

EQUIPMENT TYPE: **HAND AUGE**
DRILLING TYPE: **4" DIA. AUGER**
FIELD ENGINEER: **C. Bartlett**

MOISTURE CONTENT (% OF DRY WT)	DRY DENSITY (LBS/CU FT)	SAMPLE TYPE	SAMPLE	BLOWS/FT.	DEPTH (FEET)	USCS	GRAPHIC	SOIL DESCRIPTION
		G				GC		Clayey GRAVEL; with sand, cobbles and boulders, brown, slightly damp
								Hand Auger Refusal at 1 Foot on Cobbles and Boulders
					5			
					10			

N- STANDARD PENETRATION TEST
R- RING SAMPLE
CA- CALIFORNIA MODIFIED SAMPLER
G- GRAB SAMPLE
B- BUCKET SAMPLE

NOTES: **Groundwater Not Encountered**

THIS SUMMARY APPLIES ONLY AT THIS LOCATION AND AT THE TIME OF LOGGING. CONDITIONS MAY DIFFER AT OTHER LOCATIONS AND MAY CHANGE AT THIS LOCATION WITH TIME. DATA PRESENTED IS A SIMPLIFICATION.

Geotechnical Environmental Inspections Materials
Western Technologies Inc.
The Quality People
Since 1955

PROJECT: **JEROME WWTP IMPROVEMENTS**
PROJECT NO.: **2522JW197**

PLATE **A-11**

BORING LOG

DATE DRILLED: **9-16-22**
LOCATION: **See Location Diagram**
ELEVATION: **Not Determined**

BORING NO. 9

EQUIPMENT TYPE: **HAND AUGE**
DRILLING TYPE: **4" DIA. AUGER**
FIELD ENGINEER: **C. Bartlett**

MOISTURE CONTENT (% OF DRY WT)	DRY DENSITY (LBS/CU FT)	SAMPLE TYPE	SAMPLE	BLOWS/FT.	DEPTH (FEET)	USCS	GRAPHIC	SOIL DESCRIPTION
		G				SC		Clayey SAND; with gravel, cobbles and boulders, brown, slightly damp
								Hand Auger Refusal at 1 Foot on Cobbles and Boulders
					5			
					10			

THIS SUMMARY APPLIES ONLY AT THIS LOCATION AND AT THE TIME OF LOGGING. CONDITIONS MAY DIFFER AT OTHER LOCATIONS AND MAY CHANGE AT THIS LOCATION WITH TIME. DATA PRESENTED IS A SIMPLIFICATION.

N- STANDARD PENETRATION TEST
R- RING SAMPLE
CA- CALIFORNIA MODIFIED SAMPLER
G- GRAB SAMPLE
B- BUCKET SAMPLE

NOTES: **Groundwater Not Encountered**

Geotechnical Environmental Inspections Materials

Western Technologies Inc.
The Quality People
Since 1955

PROJECT: **JEROME WWTP IMPROVEMENTS**
PROJECT NO.: **2522JW197**

PLATE **A-12**

BORING LOG

DATE DRILLED: **9-16-22**
LOCATION: **See Location Diagram**
ELEVATION: **Not Determined**

BORING NO. 10

EQUIPMENT TYPE: **HAND AUGE**
DRILLING TYPE: **4" DIA. AUGER**
FIELD ENGINEER: **C. Bartlett**

MOISTURE CONTENT (% OF DRY WT)	DRY DENSITY (LBS/CU FT)	SAMPLE TYPE	SAMPLE	BLOWS/FT.	DEPTH (FEET)	USCS	GRAPHIC	SOIL DESCRIPTION
		G				GC		Clayey GRAVEL; with sand, cobbles and boulders, brown, slightly damp
								Hand Auger Refusal at 1 Foot on Cobbles and Boulders
					5			
					10			

N- STANDARD PENETRATION TEST
R- RING SAMPLE
CA- CALIFORNIA MODIFIED SAMPLER
G- GRAB SAMPLE
B- BUCKET SAMPLE

NOTES: **Groundwater Not Encountered**

THIS SUMMARY APPLIES ONLY AT THIS LOCATION AND AT THE TIME OF LOGGING. CONDITIONS MAY DIFFER AT OTHER LOCATIONS AND MAY CHANGE AT THIS LOCATION WITH TIME. DATA PRESENTED IS A SIMPLIFICATION.

Geotechnical Environmental Inspections Materials

Western Technologies Inc. The Quality People Since 1955

PROJECT: **JEROME WWTP IMPROVEMENTS**
PROJECT NO.: **2522JW197**

PLATE **A-13**

BORING LOG

DATE DRILLED: **9-16-22**
LOCATION: **See Location Diagram**
ELEVATION: **Not Determined**

BORING NO. 11

EQUIPMENT TYPE: **HAND AUGE**
DRILLING TYPE: **4" DIA. AUGER**
FIELD ENGINEER: **C. Bartlett**

MOISTURE CONTENT (% OF DRY WT)	DRY DENSITY (LBS/CU FT)	SAMPLE TYPE	SAMPLE	BLOWS/FT.	DEPTH (FEET)	USCS	GRAPHIC	SOIL DESCRIPTION
		G				GC		Clayey GRAVEL; with sand, cobbles and boulders, brown, slightly damp
								Hand Auger Refusal at 1 Foot on Cobbles and Boulders
					5			
					10			

THIS SUMMARY APPLIES ONLY AT THIS LOCATION AND AT THE TIME OF LOGGING. CONDITIONS MAY DIFFER AT OTHER LOCATIONS AND MAY CHANGE AT THIS LOCATION WITH TIME. DATA PRESENTED IS A SIMPLIFICATION.

N- STANDARD PENETRATION TEST
R- RING SAMPLE
CA- CALIFORNIA MODIFIED SAMPLER
G- GRAB SAMPLE
B- BUCKET SAMPLE

NOTES: **Groundwater Not Encountered**

Geotechnical Environmental Inspections Materials

Western Technologies Inc.
The Quality People
Since 1955

PROJECT: **JEROME WWTP IMPROVEMENTS**
PROJECT NO.: **2522JW197**

PLATE **A-14**

BORING LOG

DATE DRILLED: **9-16-22**
LOCATION: **See Location Diagram**
ELEVATION: **Not Determined**

BORING NO. 12

EQUIPMENT TYPE: **HAND AUGE**
DRILLING TYPE: **4" DIA. AUGER**
FIELD ENGINEER: **C. Bartlett**

MOISTURE CONTENT (% OF DRY WT)	DRY DENSITY (LBS/CU FT)	SAMPLE TYPE	SAMPLE	BLOWS/FT.	DEPTH (FEET)	USCS	GRAPHIC	SOIL DESCRIPTION
		G				GM		Silty GRAVEL; with sand, cobbles and boulders, brown, slightly damp
								Hand Auger Refusal at 1 Foot on Cobbles and Boulders
					5			
					10			

N- STANDARD PENETRATION TEST
R- RING SAMPLE
CA- CALIFORNIA MODIFIED SAMPLER
G- GRAB SAMPLE
B- BUCKET SAMPLE

NOTES: **Groundwater Not Encountered**

THIS SUMMARY APPLIES ONLY AT THIS LOCATION AND AT THE TIME OF LOGGING. CONDITIONS MAY DIFFER AT OTHER LOCATIONS AND MAY CHANGE AT THIS LOCATION WITH TIME. DATA PRESENTED IS A SIMPLIFICATION.

Geotechnical Environmental Inspections Materials
Western Technologies Inc.
The Quality People
Since 1955

PROJECT: **JEROME WWTP IMPROVEMENTS**
PROJECT NO.: **2522JW197**

PLATE **A-15**

BORING LOG

DATE DRILLED: **9-16-22**
LOCATION: **See Location Diagram**
ELEVATION: **Not Determined**

BORING NO. 13

EQUIPMENT TYPE: **HAND AUGE**
DRILLING TYPE: **4" DIA. AUGER**
FIELD ENGINEER: **C. Bartlett**

MOISTURE CONTENT (% OF DRY WT)	DRY DENSITY (LBS/CU FT)	SAMPLE TYPE	SAMPLE	BLOWS/FT.	DEPTH (FEET)	USCS	GRAPHIC	SOIL DESCRIPTION
		G				GC		Clayey GRAVEL; with sand, cobbles and boulders, brown, slightly damp
								Hand Auger Refusal at 1 Foot on Cobbles and Boulders
					5			
					10			

N- STANDARD PENETRATION TEST
R- RING SAMPLE
CA- CALIFORNIA MODIFIED SAMPLER
G- GRAB SAMPLE
B- BUCKET SAMPLE

NOTES: **Groundwater Not Encountered**

THIS SUMMARY APPLIES ONLY AT THIS LOCATION AND AT THE TIME OF LOGGING. CONDITIONS MAY DIFFER AT OTHER LOCATIONS AND MAY CHANGE AT THIS LOCATION WITH TIME. DATA PRESENTED IS A SIMPLIFICATION.

Geotechnical Environmental Inspections Materials
Western Technologies Inc.
The Quality People
Since 1955

PROJECT: **JEROME WWTP IMPROVEMENTS**
PROJECT NO.: **2522JW197**

PLATE **A-16**

BORING LOG

Test Pit/ Boring No.	Depth (ft)	USCS Class.	Particle Size Distribution (%) Passing by Weight							Atterberg Limits		Laboratory Compaction Characteristics			Remarks
			3"	¾"	#4	#10	#40	#200	2µ	LL	PI	Dry Density (pcf)	Optimum Moisture (%)	Method	
1	0-5	GM	100	71	56	48	31	15.5			NP				2
6	0-5	GC	100	69	50	41	30	18.3		43	18				2
7	0-5	GC	100	77	59	49	35	21.6		37	20				2
9	0-1	SC	100	87	71	57	40	25.6		41	16				2
12	0-1	GM	100	74	56	50	44	26.4		42	14				2

NOTE: NP = Non-plastic
µ = microns (2µ = 0.002mm)

REMARKS

Classification / Particle Size / Moisture-Density Relationship
1. Visual
2. Laboratory Tested
3. Minus #200 Only
4. Test Method ASTM D698/AASHTO T99
5. Test Method ASTM D1557/AASHTO T180
6. From the ADOT Family of Curves

Geotechnical Environmental Inspections Materials
Western Technologies Inc. The Quality People Since 1955
wt-us.com

PROJECT: TOWN OF JEROME WWTP IMPROVEMENTS
JOB NO.: 2522JW197

PLATE
B-1

SOIL PROPERTIES

Test Pit No.	Depth (ft.)	USCS Class.	Initial Dry Density (pcf)	Initial Water Content (%)	Laboratory Compaction Characteristics			Expansion Properties		Plasticity		Soluble		Remarks
					Dry Density(pcf)	Optimum Moisture(%)	Method	Surcharge (ksf)	Expansion (%)	LL	PI	Salts (ppm)	Sulfate (ppm)	
6	0-5	GC	91.5	17.4	96.4	20.3	A	0.1	1.9					1,2,3
7	0-5	GC	109.8	12.0	115.7	14.9	A	0.1	2.1					1,2,3

Notes: Initial Dry Density and Initial Water Content are remolded.

Remarks

1. Compacted density (approx. 95% of ASTM D698 max. density at moisture content slightly below optimum.)
2. Submerged to approximate saturation.
3. Test Method ASTM D698/AASHTO T99
4. Test Method ASTM D1557/AASHTO T180
5. From the ADOT Family of Curves

Geotechnical Environmental Inspections Materials

Western Technologies Inc. The Quality People Since 1955

wt-us.com

PROJECT: TOWN OF JEROME WWTP IMPROVEMENTS

JOB NO.: 2522JW197

SOIL PROPERTIES

PLATE

B-2

Test No.	Depth (ft)	Rock Classification	Unit Weight (pcf)	Unconfined Compressive Strength (psi)	Remarks
1	Surface	Limestone	166.7	4,150	1,2
2	Surface	Limestone	167.8	10,940	1,2

REMARKS:

1. ASTM D7012 – Unit Weight of Rock Cores
2. ASTM C39 – Unconfined Compressive Strength of Rock Cores

Geotechnical Environmental Inspections Materials
Western Technologies Inc. The Quality People Since 1955
wt-us.com

PROJECT: TOWN OF JEROME WWTP IMPROVEMENTS
JOB NO.: 2522JW197

PLATE
B-3

ROCK PROPERTIES

CORROSIVITY TEST RESULTS

The procedures for soil survey tests and observations can be found in Appendix X1.1 of ASTM A674-10 and includes five soil properties: earth resistivity • pH • redox potential • sulfides • moisture.

Test Pit 7(0-5):

Analysis	Results		Points
Resistivity (ohm-cm)	1401		10
pH	8.5		0
Redox Potential (mV)	+134		0
Sulfides	trace		2
Moisture	fair		1
		Total Points	13

Boring 12(0-1):

Analysis	Results		Points
Resistivity (ohm-cm)	2481		2
pH	8.1		0
Redox Potential (mV)	+314		0
Sulfides	trace		2
Moisture	fair		1
		Total Points	5

The test procedure states that if the sum of the points is greater than 10, the soil is considered corrosive to ductile iron pipe and special protection against exterior corrosion is necessary. This conclusion is limited to soil corrosion and does not include consideration of stray direct current.

MOTZZ LABORATORY, INC.

Report: 943846
Reported: 9/28/2022
Received: 9/26/2022
PO: 2522P176

Laboratory Analysis Report

Western Technologies - Flagstaff
Gregory L. E. Burr
2400 East Huntington
Flagstaff, AZ 86004-8934

Project: 2522JW197

Lab Number	Sample ID
943846-2	1 (0-5')

Test Parameter

Test	*Method*	*Result*	*Units*
Soluble Salts	ARIZ 237b	1162	ppm
Sulfate	ARIZ 733b	236	ppm
Chloride	ARIZ 736b	7	ppm

Lab Number	Sample ID
943846-1	12 (0-1')

Test Parameter

Test	*Method*	*Result*	*Units*
Soluble Salts	ARIZ 237b	303	ppm
Sulfate	ARIZ 733b	15	ppm
Chloride	ARIZ 736b	7	ppm
Redox Potential	ASTM G200-09	314	(Eo) mV

Appendix B – MAG Standard Details

SECTION 321

PLACEMENT AND CONSTRUCTION OF ASPHALT CONCRETE PAVEMENT

321.1 DESCRIPTION:

This section is to provide specifications for furnishing all materials, mixing at a plant, hauling and placing a mixture of aggregate materials, mineral admixture and asphalt binder to form a pavement course for placement upon a previously prepared base or subbase.

321.2 MATERIALS AND MANUFACTURE:

The materials shall conform to Section 710 for the type specified. Warm Mix Asphalt (WMA) technologies may be used within the mixture provided all requirements of the specifications are met, and the technology is on the ADOT approved product list. The specific required mix type shall be called out in the contract documents or as directed by the Engineer.

321.3 WEATHER AND MOISTURE CONDITIONS:

Asphalt concrete shall be placed only when the surface is dry, and when the atmospheric temperature in the shade is 40 degrees F. (50 degrees F for Asphalt Concrete lift less than 2-inch thick) or greater. No asphalt concrete shall be placed when the weather is foggy or rainy, or when the base or subbase on which the material is to be placed is unstable. Asphalt concrete shall be placed only when the Engineer determines that weather conditions are suitable.

321.4 APPLICATION OF TACK COAT:

A tack coat shall be applied to all existing and to each new course of asphalt concrete prior to the placing of a succeeding lift of asphalt concrete. If approved by the Engineer, the tack coat may be deleted when a succeeding layer of asphalt concrete is being applied over a freshly laid course that has been subjected to very little traffic.

The application of the tack coat shall comply with Section 329. The grade of emulsified asphalt shall be SS-1h or CSS-1h as specified in Section 713. The same material that is specified above for the tack coat shall be applied to the vertical surfaces of existing pavements, curbs, and gutters, against which asphalt concrete is to be placed.

The surface to be covered may require repair or patching as directed by the Engineer. This shall be addressed in the project specifications prior to the bidding of the project.

321.5 MIX DESIGN:

The mix design shall be submitted to the Engineer at least five working days prior to the start of asphalt concrete production. Mix designs provided by the agency may be utilized on projects at the Engineer's discretion. The Engineer will review and approve the mix design to assure it contains all of the required information as outlined in Section 710.3.1. If WMA technologies are used within the mix design, the type of WMA technology used shall be indicated on the mix design. The target values for gradations, binder contents, and air voids will be established as the accepted Job Mix Formula (JMF) based upon the mix design. Mix designs not containing all of the information will be returned within five working days of receipt of all mix design information, for action and resubmission by the contractor.

Once the mix design has been approved by the agency and the mixing plant selected, the Contractor and/or his supplier shall not change plants nor utilize additional mixing plants without prior approval of the Engineer.

If the contractor elects to change its source of material, the contractor shall furnish the Engineer with a new mix design, which meets the requirements of Section 710, as amended by the Project Specifications.

The contractor may make self-directed target changes to the approved mix design within the limits shown below. Requests for self-directed target changes shall be made in writing, acknowledged by the Engineer prior to the start of production of a lot, and will remain in effect until such time as any additional changes are implemented. The self-directed target changes must meet the contract requirements for mix design criteria and gradation limits.

TABLE 321-1 ALLOWABLE SELF-DIRECTED TARGET CHANGES	
MEASURED CHARACTERISTICS	ALLOWABLE SELF-DIRECTED TARGET CHANGES
Gradation (Sieve Size)	
3/8 inch	± 4% from mix design target value
No 8	± 4% from mix design target value
No 40	± 2% from mix design target value
No 200	+ 0.5% from mix design target value
Binder Content	± 0.2% from mix design target value
Effective Air Voids	None

The contractor may propose target changes, other than self-directed changes, to the approved mix design for the approval of the Engineer. The Engineer will determine if the proposed target change will result in mix production that meets the contract requirements for mix design criteria and gradation limits. The target changes will not be retroactive for the purpose of acceptance.

321.6 MIX PRODUCTION:

All materials shall be proportioned by weight in a hot mix asphalt plant in the proportions required by the mix design to provide a homogeneous and workable mass. Each hot mix asphalt plant shall be inspected in accordance with the provisions contained in the 'Hot Mix Asphalt Production Facilities' by the Arizona Rock Products Association and shall have a current inspection certificate. All measuring devices shall be calibrated at least annually by a technician licensed by the Arizona Bureau of Weights & Measures. Mixing plants shall conform to the requirements of AASHTO M-156, except as modified herein. If WMA technology is being used, any equipment associated with the production of hot mix asphalt shall be calibrated and in proper working order according to the WMA equipment specifications. If there are any deviations in the production or compacting temperatures of the hot mix asphalt with WMA technology, the mix design shall state the differences.

In drum mix plants, the mineral admixture shall be added and thoroughly mixed with the mineral aggregate by means of a mechanical mixing device prior to the mineral aggregate and mineral admixture entering the dryer. The moisture content of the combined mineral aggregate shall be a minimum of three percent by weight of the aggregate during the mixing process.

For drum-mix plants, the mineral admixture shall be weighed across a weight belt, or other approved alternative weighing system, with a weight totalizer prior to entry into the mechanical mixing device. The mechanical mixing device shall be a pug mill type mixer that is in good working condition. The rate of the aggregate feed shall not exceed the mixing device's capacity in ton per hour. The mixer shall be constructed to minimize the loss of mineral admixture and shall be located in the aggregate delivery system at a location where the mixed material can be readily inspected. The mixing device shall be capable of effective mixing in the full range of the asphalt concrete production rates.

The hot plant and equipment shall be constructed and operated to prevent loss of mineral admixture through the dust collection system of the plant.

A positive signal system shall be provided and used during production whereby the mixing shall automatically be stopped if the mineral admixture is not introduced into the mineral aggregate. The plant will not be permitted to operate unless the signal system is in good working condition.

The introduction of bituminous material shall be controlled by an automated system fully integrated with the controls or the mineral aggregate and mineral admixture. The production of the plant shall be controlled by the rate required to obtain a uniform mixture of all components. Drying and heating shall be accomplished in such a manner as to preclude the mineral admixture from becoming coated with un-spent fuel.

The completed asphalt concrete may be held in storage for up to 12 hours in insulated or heated silos, providing the minimum temperature noted herein for placement and compaction is met behind the placement device. If the Engineer determines that there is an excessive amount of heat, heat loss, drain down, segregation and/or oxidation of the mixture due to temporary storage, use of surge bins or storage bins will be discontinued.

The temperature of the asphalt concrete, with unmodified binders, upon discharge from the mixer shall not exceed 335 degrees F. The discharge temperature may be increased on the recommendation of the binder supplier, when approved by the Engineer. If the asphalt concrete is discharged from the mixer into a hopper, the hopper shall be constructed so that segregation of the asphalt concrete will be minimized.

321.7 TRANSPORTATION:

Petroleum distillates or other substances that will have a detrimental effect on the asphalt concrete shall not be used as a release agent.

The beds of all transportation units shall be clean and smooth to allow the free flow of material into the paving machine's hopper.

Tarpaulins shall be furnished on all trucks and used when weather condition warrant, or if directed by the Engineer.

321.8 PLACEMENT:

Placement of asphalt concrete pavement shall not commence until authorized by the Engineer. The Engineer's authorization to allow commencement of asphalt concrete paving will generally require all newly constructed valley gutters, curbing, and curb and gutters which new pavement is to be placed against to be in-place and in an acceptable condition. While it is preferred to have all newly constructed concrete items against which new pavement is to be placed be in an acceptable condition, the Engineer may allow paving to commence based on weather, the amount of defective concrete, or other considerations.

321.8.1 Placing: All courses of asphalt concrete shall be placed and finished by means of a self-propelled paving machine equipped with an automatically actuated control system, except under certain conditions or at locations where the Engineer deems the use of a self-propelled paving machine impracticable.

The control system shall control the elevation of the screed at each end by controlling the elevation of one end directly and the other end indirectly either through controlling the transverse slope or alternatively when directed, by controlling the elevation of each end independently.

The control system shall be capable of working with one of the following devices:

(a) Ski or non-contact device of not less than 30 feet in length, supported throughout its entire length
(b) Taut stringline or wire set to grade
(c) Short ski or sonar sensing units from curb control
(d) Joint matching shoe

Failure of the control system to function properly shall be cause for the suspension of asphalt concrete production. In order to achieve a continuous operation, the speed of the paving machine shall be coordinated with the hot mix plant and transport units.

If the asphalt concrete is dumped from the hauling vehicles directly into the paving machine, care shall be taken to avoid jarring the machine or moving it out of alignment. No vertical load shall be exerted on the paving machine by the truck.

If asphalt concrete is dumped upon the surface being paved and subsequently loaded in the paving machine, the loading equipment shall be self-supporting and shall not exert any vertical load on the paving machine. Substantially all of the asphalt concrete shall be picked up and loaded into the paving machine.

Self-propelled paving machines shall spread the mixture without segregation or tearing, true to line, grade and crown indicated on the project plans. Pavers shall be equipped with hoppers and augers that will distribute the mixture uniformly in front of an adjustable floating screed. The raising of the hopper wings must be minimized and the paving machine will not be operated when in an empty condition.

Screeds shall include any strike-off device operated by tamping or vibrating action which is effective, without tearing, shoving or gouging the mixture and which produces a course with a uniform texture and density for the full width being paved. Screeds shall be adjustable as to height and crown and shall be equipped with a controlled heating device for use when required. In the

case of the screed, auger extensions and vibrators shall be installed wherever the screed is extended more than one (1) foot beyond the end of the base auger or auger extension. However, when placing material against an extremely uneven curb or edge over a short distance, the Engineer may waive the auger extensions and vibrators.

At any place not accessible to the roller, the mixture shall be thoroughly compacted with tampers to provide a uniform and smooth layer over the entire area compacted in this manner.

321.8.2 Joints: Transverse joints, before a surface course is placed in contact with a cold transverse construction joint, the cold existing asphalt concrete shall be trimmed to a vertical face for its full depth exposing a fresh face. The fresh face shall be tack coated prior to placement of the new asphalt concrete. After placement and finishing the new asphalt concrete, both sides of the joint shall be dense and the joint shall be smooth and tight. The surface in the area of the joint shall not deviate more than 1/4 inch from a 12-foot straightedge, when tested with the straightedge placed across the joint, parallel to the centerline.

Longitudinal joints of each asphalt course shall be staggered a minimum of 6 inches with relation to the longitudinal joint of the immediate underlying course's cold longitudinal construction joint.

Longitudinal joints with existing or cold (more than 32 hours old) asphalt concrete shall require the existing pavement to be trimmed to a vertical face for its full depth exposing a fresh face. The fresh face shall be tacked prior to placement of the adjacent course. Longitudinal joints with an existing asphalt pavement that is less than 32 hours old that has had its edge protected from damage may have adjacent new asphalt concrete placed after applying the required tack coat. After placement and finishing of longitudinal joints, both sides of the joint shall be dense and the joint shall be smooth and tight. The surface in the area of the joint shall not deviate more than 1/4 inch from a 12-foot straightedge, when tested with the straightedge placed across the joint, in any direction.

321.8.3 Asphalt Leveling Course: A leveling course shall be used when specified, or as directed in writing by the Engineer, to bring existing pavement to a uniform grade prior to placing an overlay or other course. If a leveling course is being applied on an asphalt surface, a tack coat shall be applied. The compaction requirements contained in Section 321.10 do not apply to leveling courses.

321.8.4 Compaction - Asphalt Base Course and Surface Course: It is the contractor's responsibility to perform Quality Control monitoring and/or testing during compaction operations to achieve the required compaction. The temperature of the asphalt concrete immediately behind the laydown machine shall be at least 265 degrees F, unless WMA technology is being used. If WMA technology is being used then the minimum requirements will be stated within the mix design recommended by the WMA manufacturer. A probe type electronic thermometer with a current calibration sticker attached will be used to measure the temperature of the asphalt concrete mixture. When measuring the temperature of the mat, the probe shall be inserted at mid-depth and as horizontal as possible to the mat. The contractor is responsible to achieve the required compaction.

Asphalt compaction equipment shall be of sufficient size and weight to accomplish the required compaction. All compaction equipment shall be operated and maintained in accordance with the manufacturer's recommendations and the project requirements. During the rolling operation, the speed of the roller shall not exceed three miles per hour, unless otherwise approved by the Engineer.

Pneumatic tired compactors shall be equipped with skirt-type devices mounted around the tires so that the temperature of the tires will be maintained during the compaction process.

The Engineer will determine the acceptability of the pavement compaction in accordance with Section 321.10.

321.8.5 Smoothness: The completed surfacing shall be thoroughly compacted, smooth and true to grade and cross-section and free from ruts, humps, depressions or irregularities. An acceptable surface shall not vary more than 1/4 inch from the lower edge of a 12-foot straightedge when the straightedge is placed parallel to the centerline of the roadway.

321.8.6 Asphalt Concrete Overlay: Asphalt concrete overlay consists of the placing and compacting plant mix asphalt concrete over existing pavement. The mix design and thickness of the overlay shall be as shown on the plans or as specified in the special provisions.

Except when the existing asphalt surface is to be preheated and remixed, pavement surfaces shall be prepared as follows:

(A) Areas designated for pavement repair by the contract documents (which may include severely raveled areas, severely cracked areas, over-asphalted areas, and other defects) shall be cut out and replaced. Pavement repairs shall be completed and approved before placing asphalt concrete overlay.

(B) Before placing asphalt concrete overlay, raised pavement markers shall be removed, and milling shall be completed. Milling shall be as shown on the plans or specified in the special provisions and shall be in accordance with Section 317.

(C) After pavement repairs and milling have been completed, the entire surface shall be cleaned with a power broom.

(D) After surfaces have been prepared to the satisfaction of the Engineer, they shall receive a tack coat per Section 321.4. Traffic will not be permitted to travel over surfaces that have received a tack coat, except when tack coat is applied to milled surfaces in compliance with Section 317.2 for dust control purposes. When the overlay is to extend onto a concrete surface, the concrete surface shall be thoroughly cleaned of loose dust and cement particles and shall be tack coated.

Asphalt concrete overlay shall be placed as specified in Section 321.8.1 and compacted as specified in Section 321.8.4. The surface smoothness shall meet the tolerances specified in Section 321.8.5.

Frames and covers of manholes, survey monuments, valve boxes, clean-outs and other existing structures shall be adjusted in accordance with Section 345 to set flush with the finished surface of the new pavement. During adjustment, if pavement or base materials are removed or disturbed, they shall be replaced with approved materials installed in a manner acceptable to the Engineer.

On roads without curb and gutter, the existing unpaved shoulder elevation shall be adjusted by the Contractor to match the elevation at the edge of the new overlay and slope away from the new pavement surface at a rate that the existing quantity of shoulder material will allow. Shoulder material shall be compacted to a minimum of 95% of maximum density, determined in accordance with Section 301.3. Shoulder adjustment to match the new pavement surface elevation shall not be measured. The cost of shoulder adjustment shall be included in the price paid for the asphalt concrete overlay or other related pay items. When the Engineer determines an insufficient amount of material is available for shoulder adjustment, the Engineer may require the Contractor to provide additional material. Acceptable material for shoulders includes the existing shoulder material, millings, untreated base materials, or a granular material approved by the Engineer. Engineer requested imported material for shoulder adjustment is not included in the price paid for the asphalt concrete overlay.

321.8.7 Pavement Fabric Interlayer: Pavement fabric interlayer shall be used only when specified on the plans or in the specifications. Pavement fabric interlayer shall be in accordance with Table 796-1 and be the class designated on the plans or in the specifications.

Asphalt binder coat used to bond the fabric to the pavement shall be paving asphalt PG 70-10 asphalt cement conforming to the requirements of Section 711. The application and distributing equipment for the asphalt binder shall conform to the requirements of Section 330. The asphalt binder coat shall be uniformly spray applied to the prepared pavement surface at the rate of 0.20 gallons per square yard for Class B fabric or at the rate of 0.25 gallons per square yard for Class A fabric. Some underlying surfaces may require a higher or lower application rate. A test strip may be necessary to determine the proper application rate. The width of liquid asphalt cement application shall be the fabric width, plus six inches.

Neither the asphalt binder coat or fabric interlayer shall be placed when weather conditions, in the opinion of the Engineer, are not suitable. The asphalt binder and fabric interlayer shall only be placed when the pavement is dry, the ambient air temperature is 50 degrees F and rising, and pavement temperature is 40 degrees F and rising.

Equipment for placing the fabric shall be mechanized and capable of handling full rolls of fabric. The equipment shall be able to lay the fabric smoothly to maximize pavement contact and remove air bubbles. Stiff bristle brooms shall be used to smooth the fabric. The equipment used to place the fabric shall be in good working order and is subject to approval by the Engineer.

Pavement fabric interlayer shall not be placed if the in-place binder is hotter than 325 degrees F or has cooled to 180 degrees F or below (as determined by non-contact thermometer).

Pavement fabric interlayer shall be placed onto the asphaltic binder with the heat-bonded side up with a minimum amount of wrinkling or folding. Remaining wrinkles or folds 1-inch and larger shall be removed or slit and shingle-lapped in the direction of paving. Burning or torching of wrinkles is not allowed. Fabric shall overlap three to six inches to insure full closure of the joint. Transverse joints shall be shingle-lapped in the direction of paving to prevent edge pickup by the paver. A second application of hand-placed asphalt binder may be required at laps and repairs as determined by the Engineer to ensure proper binding of the narrow double fabric layer.

All areas where fabric has been placed shall be paved with asphaltic concrete during the same work shift. Placement of the asphaltic concrete shall closely follow fabric lay down. The temperature of the asphaltic concrete immediately behind the laydown machine shall not exceed 325 degrees F, unless modified by the WMA technology being used. If WMA technology is being used then the minimum requirements will be stated within the mix design recommended by the WMA manufacturer. In the event that the asphalt binder coat bleeds through the fabric causing construction problems before the overlay is placed, the affected areas shall be sanded with a sand blotter in compliance with Section 333. Excess sand shall be removed before beginning the paving operation. In the event of rainfall prior to the placement of the asphaltic concrete, the fabric shall be allowed to dry before the asphalt concrete is placed.

Turning of the paving machine or of other vehicles on the fabric shall be gradual and kept to a minimum to avoid damage to the fabric. Should equipment tires stick to the fabric during pavement operations, small quantities of paving asphalt concrete shall be broadcast on the fabric to prevent pick-up. Decrease of binder rate in order to minimize pick-up on tires is not allowed.

321.8.8 Thickened Edge: When the depth of the thickened edge extends four inches or more below the bottom of the asphalt pavement, the portion of the thickened edge extending below the asphalt pavement shall be placed and compacted prior to placement of the asphalt pavement. Placement of tack coat on the surface of the compacted thickened edge asphalt may be omitted when additional asphalt pavement is placed on the same day and the Engineer agrees that the surface of the thickened edge asphalt has remained clean.

When the depth of the thickened edge extends less than four inches below the bottom of the asphalt pavement, the portion below the asphalt pavement may be placed and compacted with the asphalt pavement in a single operation.

321.8.9 Safety Edge: The finished safety edge slope shall be planar forming a 30° ± 5° angle with the adjacent roadway surface and extend a minimum of five inches (5”) below the roadway pavement’s finished surface.

The safety edge shall be constructed with the top or final paving lift of a new pavement or overlay using a device that is mounted to or is a part of the screed portion of the laydown machine. The safety edge device shall be capable of constraining the asphalt concrete material to increase density of the extruded profile by reducing the volume. A conventional single strike-off plate is not acceptable. Compaction obtained from the extruded safety edge shall be acceptable when the extruded shape conforms to the specified shape.

During laydown operations if the extruded safety edge does not conform to the specified shape, the Contractor shall take immediate actions to correct the deficiency and to repair all non-compliant sections of safety edge. The Contractor shall stop paving operations until corrections to the laydown operation have been made and resumption of paving is approved by the Engineer or his designated representative.

321.8.10 Protection for Asphalt Base Course: Arterial roadway traffic shall not be allowed on a new asphalt base course that is less than five (5) inches in thickness without the written consent of the Engineer.

321.9 QUALITY CONTROL:

It is the contractor’s responsibility to perform Quality Control monitoring and/or testing during asphalt concrete production to achieve the required compaction and to perform Quality Control monitoring and/or testing during asphalt concrete production to achieve the required mix properties. The Engineer may obtain samples of any portion of any material at any point of the operations for his own use. Also, the Engineer may order the use of any drying, proportioning and mixing equipment or the handling of any material discontinued which, in his/her opinion, fails to produce a satisfactory mixture.

The asphalt concrete produced shall conform to the requirements of the production tolerances established in Section 321.10.

When the asphalt concrete does not conform to the production tolerances, it shall be reported to the Engineer, and corrective quality control measures shall be implemented, or production shall cease immediately at no additional cost to the contracting Agency.

Requests for referee testing as described in Section 321.11 will only be considered based on quality control test results performed by a laboratory accredited by the AASHTO Accreditation Program (AAP) for the tests being performed or a laboratory listed in the current ADOT Directory of Approved Materials Testing Laboratories for the set of tests in question. The laboratory shall use properly certified technicians in accordance with ASTM D3666, Section 7 (Personnel Qualifications).

321.10 ACCEPTANCE:

321.10.1 Acceptance Criteria: Asphalt concrete will be divided into lots for the purpose of acceptance. A lot shall be one day's production. Each lot shall be divided into sublots of 500 ton or fraction thereof. Tests used to determine acceptance will be performed by a laboratory accredited by the AASHTO Accreditation Program (AAP) for the tests being performed. The contracting agency shall provide an appropriately accredited laboratory or laboratories to perform the acceptance testing. Laboratories shall use properly certified technicians in accordance with ASTM D3666, Section 7 (Personnel Qualifications). The acceptance laboratory will take representative samples of the asphalt concrete from each sublot to allow for testing of gradation, binder content, air voids, pavement thickness, and compaction of base and surface courses. Acceptance of each sublot will be based on the test data from the sample(s) from that sublot. All acceptance samples shall be taken using random locations or times designated by the Engineer in accordance with ASTM D3665.

For permit work, testing that does not strictly adhere to the sampling and testing methodology and requirements outlined in this section shall be disregarded and not considered in any acceptance determination. All required retesting shall be at the expense of the permittee.

321.10.2 Gradation, Binder Content and Air Voids: The acceptance laboratory will take a sample of the asphalt concrete in accordance with the requirements of Section 2 or 4 of Arizona Test Methods 104 or AASHTO T-168 from each sublot. The minimum weight of the sample shall be 45 pounds. Asphalt binder content and gradation shall be determined in accordance with AASHTO T-308 using the ignition furnace for each sublot. The acceptance laboratory is responsible for obtaining the necessary materials and performing an ignition furnace calibration as outlined in AASHTO T-308 for each asphalt concrete mixture utilized on the project. The correction factor used for each test shall be clearly indicated on the report. Reports that do not include the correction factor, performed as stated in the previous sentences, shall be considered invalid and not allowed to be used for acceptance. The bulk density for Marshall Mix designs shall be tested in accordance with AASHTO T-245. The bulk density for Gyratory mix designs shall be determined in accordance with AASHTO T-312. The maximum theoretical density shall be determined in accordance with the requirements of AASHTO T-209 including fan drying per AASHTO T-209 Section 15. Effective voids of the laboratory compacted specimens will be determined at a minimum of once per lot in accordance with the requirements of AASHTO T-269. Should the testing for effective air voids not meet the "Full Payment" or "No Corrective Action" requirements of Table 321-5, additional testing for laboratory air voids on the remaining sublots will be performed as necessary to determine the extent of the deficiency. Acceptance testing results will be furnished to the contractor and the supplier within five working days of receipt of samples by the acceptance laboratory.

During production, the allowable deviations from the mix design gradation targets are listed in the tables below. The allowable production tolerances may fall outside of the mix design gradation bands.

TABLE 321-3A
GRADATION ACCEPTANCE LIMITS FOR MARSHALL MIXES

Sieve Size	3/8 inch Mix	1/2 inch Mix	3/4 inch Mix	Base Mix
1 inch	—	—	—	±7%
3/4 inch	—	—	±7%	±6%
1/2 inch	—	±7%	—	—
3/8 inch	±7%	±6%	±6%	±6%
No. 8	±6%	±6%	±6%	±6%
No. 40	±4%	±4%	±4%	±4%
No. 200	±2%	±2%	±2%	±2%

TABLE 321-3B GRADATION ACCEPTANCE LIMITS FOR GYRATORY MIXES			
Sieve Size	3/8 inch Mix	1/2 inch Mix	3/4 inch Mix
3/4 inch	—	—	±7%
1/2 inch	—	±7%	±6%
3/8 inch	±7%	±6%	—
No. 8	±6%	±6%	±6%
No. 40	±4%	±4%	±4%
No. 200	±2%	±2%	±2%

If the results from a single acceptance sample fall outside of the acceptance limits in Table 321-3A or 321-3B as applicable, a second sample shall be taken and if the second acceptance sample is also outside of the acceptance limits the Contractor shall cease production of asphalt concrete. Production shall not begin again until calibration test results verify that adjustments made to materials or proportions yield a gradation that falls within acceptance limits in Table 321-3A or 321-3B as applicable.

If the asphalt binder content is within ± 0.40% of the mix design target value, the asphalt concrete will be paid for at the contract unit price. If the asphalt binder content deviates by more than ± 0.40% from the mix design target value, the deficient area will be evaluated within the sublot by coring one additional location at a maximum interval of 100 feet on each side of the deficient sample. The asphalt content of the original deficient sample will be averaged with the asphalt binder content of the two additional cores to determine compliance with the acceptance requirements. If the resulting average of the asphalt binder content deviates by more than ± 0.40% from the mix design target value, then Table 321-4 shall apply to the sublot. If approved by the Engineer, the Contractor may obtain additional cores to assist in formulation of an Engineering Analysis, but the additional cores shall not be used for re-evaluating acceptance.

TABLE 321-4 ASPHALT BINDER CONTENT ACCEPTANCE AND PENALTIES		
Deviation from that permitted	When the contracting agency is the owner: Payment Reduction ($ per ton of asphalt concrete)	When the contracting agency is not the owner (i.e. permits): Corrective Action
Over 0.2% above that permitted	Removal* or EA	Removal* or EA
Over 0.1% to 0.2% above that permitted	$6.00	EA
Over 0.0% to0.1% above that permitted	$2.00	EA
Within permitted range	Full Payment	No Corrective Action
Over 0.0% to0.1% below that permitted	$2.00	EA
Over 0.1% to 0.2% below that permitted	$6.00	EA
Over 0.2% below that permitted	Removal* or EA	Removal* or EA

NOTES: *The Contractor shall remove and replace the entire sublot that is deficient.
EA = Engineering Analysis per Section 321.10.6

If the laboratory air voids fall within a range of 2.8% to 6.2%, the asphalt concrete will be paid for at the contract unit price. If the laboratory air voids are outside of this range, the deficient area will be evaluated within the sublot by coring one additional location at a maximum interval of 100 feet on each side of the deficient sample. The laboratory air voids of the original deficient sample will be averaged with the laboratory air voids obtained from each of the two additional cores to determine compliance with the acceptance requirements. If the resulting average of the laboratory air voids is outside the indicated range, then Table 321-5 shall apply to the sublot. If approved by the Engineer, the Contractor may obtain additional cores to assist in formulation of an Engineering Analysis, but the additional cores shall not be used for re-evaluating acceptance.

TABLE 321-5 LABORATORY VOIDS ACCEPTANCE AND PENALTIES		
Laboratory Air Voids (Measured at N_{des} or 75 blows as applicable)	When the contracting agency is the owner: Payment Reduction ($ per ton of asphalt concrete)	When the contracting agency is not the owner (i.e. permits): Corrective Action
Less than 1.5%	Removal* or EA	Removal* or EA
1.5-2.0%	$5.00	EA
2.1-2.7%	$2.00	EA
2.8-6.2%	Full Payment	No Corrective Action
6.3-6.9%	$2.00	EA
7.0-8.0%	$5.00	EA
Greater than 8.0%	Removal* or EA	Removal* or EA

NOTES: *The Contractor shall remove and replace the entire sublot that is deficient.
EA = Engineering Analysis per Section 321.10.6

If an agency or Engineer is purchasing asphalt concrete directly from a commercial material supplier, the agency or Engineer will use Section 321.10, and specifically Tables 321-3A or 321-3B as applicable, 321-4 and 321-5 from Section 321.10, when determining the acceptance of the asphalt concrete with the material supplier.

321.10.3 Surface Testing: If directed by the Engineer, surface drainage test shall be performed. The completed surfacing shall be thoroughly compacted, smooth and true to grade and cross-section, and free from ruts, humps, depressions or irregularities. An acceptable surface shall not vary more than 1/4 inch from the lower edge of a 12-foot straightedge when the straightedge is placed parallel to the centerline of the roadway. The straightedge shall be furnished by the contractor and shall be acceptable to the Engineer.

All streets shall be water tested for drainage in the presence of the Engineer or designated representative before final acceptance. Any areas not draining properly shall be corrected to the Engineer's satisfaction at the Contractor's expense. Water for this testing shall be provided and paid for by the Contractor.

When deviations in excess of the above tolerance are found, humps or depressions shall be corrected to meet the specified tolerance. The defective pavement shall be cut out along neat straight lines or for multiple course pavements the surface course may be milled out, and the removed pavement replaced with fresh hot mixture and thoroughly compacted to conform with and bond to the surrounding area. Materials and work necessary to correct such deviations shall be at no additional cost to the Contracting Agency.

When pavement is cut out along neat straight lines, full depth longitudinal joints shall not be located within a lane wheel path or within forty-eight inches (48") of an asphalt pavement edge. Longitudinal joints shall comply with the restrictions for Type A Trench Repairs in Section 336.3.

321.10.4 Asphalt Pavement Thickness: Asphalt pavement thickness will be determined from cores secured from each lift of each sublot. Such cores will be taken and measured by the Asphalt Concrete Coring Method. This method can be found in Section 321.14. Each core location will be patched by the party responsible for the testing.

Acceptance or assessment of penalties for asphalt pavement thickness will be based on the combined total thickness of all asphalt concrete layers omitting all layers of asphalt-rubber asphalt concrete. If the final total pavement thickness exclusive of all ARAC layers is deficient from the target thickness by 0.25 inches or less, it will be paid for at the contract unit price.

If the thickness deficiency of the pavement core exceeds 0.25 inch, the thickness deficiency shall be evaluated by coring at a maximum interval of 100 feet on each side of the deficient core. The thickness of the original deficient core will be averaged with the thicknesses of the cores taken from each side of it to determine compliance with the acceptance requirements.

If the pavement thickness deficiency is greater than 0.25 inches and the contracting agency is not the owner (i.e. permits) the following will apply:

(1) If the pavement thickness deviates from the target thickness by more than 0.25 inch but not more than 0.50 inch, corrective action will be required. This corrective action shall consist of application of a Type II slurry seal coat in accordance to Section 715. The Contractor may present an Engineering Analysis outlining other proposed remedial measures for the consideration by the Engineer. The Engineer will review the Engineering Analysis and decide within 30 working days whether to accept the proposed remedial measures.

(2) If the pavement thickness deviates from the target thickness by more than 0.50 inch, corrective action will be required. The deficient area shall be overlaid with no less than a 1 inch thick lift, for the full width of the pavement to meet or exceed the designed thickness, with appropriate end and edge milling, with a mixture approved by the Engineer. The Contractor may present an Engineering Analysis outlining other proposed remedial measures for the Engineer's consideration. The Engineer will review the Engineering Analysis and decide within ten working days whether to accept the proposed remedial measures. If the Engineer chooses to reject the Engineering Analysis, the indicated overlay shall be constructed by the Contractor at no additional cost to the Owner.

If the contracting agency is the owner and the pavement thickness deficiency is greater than 0.25 inches but less than 0.50 inches, Table 321-6 will apply. If the pavement thickness deficiency is greater than 0.5 inches, the deficient area shall be overlaid with no less than a 1-inch thick lift for the full width of the pavement to meet or exceed the designed thickness using an asphalt mixture approved by the Engineer. The Contractor shall provide appropriate end and edge milling. The overlay and milling shall be accomplished by the Contractor at no additional cost to the contracting agency.

TABLE 321-6
ASPHALT PAVEMENT THICKNESS PAYMENT REDUCTION
For Thickness Deficiency of More Than 0.25 inches and less than 0.50 inches

Total Specified Asphalt Pavement Thickness exclusive of ARAC (if any)	Reduction in Payment Applied to asphalt concrete Except ARAC layers (if any)
Less than 1.5 inches	50%
1.50 inches to 1.99 inches	33%
2.00 inches to 2.49 inches	25%
2.50 inches to 2.99 inches	20%
3.00 inches and greater	17%

321.10.5 Density:

321.10.5.1 Pavement 1-1/2 Inches or Less in Nominal Thickness: Compaction shall consist of a "Rolling Method Procedure" using an established sequence of coverage with specified types of compactors. A pass shall be defined as one movement of a compactor in either direction. Coverage shall be the number of passes as are necessary to cover the entire width being paved.

The rolling sequence, the type of compactor to be used, and the number of coverages required shall be as shown in Table 321-7.

TABLE 321-7				
ROLLING SEQUENCE FOR LIFT THICKNESS 1½" OR LESS				
Rolling	Type of Compactor		No. of Coverages	
Sequence	Option No. 1	Option No. 2	Option No. 1	Option No. 2
Initial	Static Steel	Vibrating Steel	1	1
Intermediate	Pneumatic Tired	Vibrating Steel	4	2- 4*
Finish	Static Steel	Static Steel	1-3	1-3
* Based on the roller pattern which exhibits the best performance.				

The Contractor shall select the option for compaction and, when pneumatic-tired compactors are used will designate the tire pressure. Steel wheel compactors shall not be used in the vibratory mode for courses of one inch or less in thickness nor when the temperature of the asphaltic concrete falls below 180 degrees F. Initial and intermediate compaction shall be accomplished before the temperature of the asphaltic concrete falls below 200 degrees F.

Compaction will be deemed to be acceptable on the condition that the asphaltic concrete is compacted using the type of compactors specified, ballasted and operated as specified, and with the number of coverages of the compactors as specified.

321.10.5.2 Pavement Greater than 1-1/2 Inches in Nominal Thickness: Achieving the required compaction is the responsibility of the contractor. The number and types of rollers is the contractor's responsibility and shall be sufficient to meet these requirements.

In-place air voids shall be determined in accordance with AASHTO T-269 utilizing cores taken from the finished pavement. The maximum theoretical density used in the determination of in-place air voids will be the average value from the acceptance samples determined for the lot as outlined in 321.10.1.

The Engineer will designate one random test location for each sublot and the acceptance laboratory will obtain one core from that location. Regardless of sublot quantities or boundaries, a minimum of one core will be obtained per residential street and a minimum of one core per travel lane for collector and arterial streets. The outside one foot of each pass of the pavement course or any unconfined edge will be excluded from testing. The Engineer may exclude areas from the compaction lot that are not accessible by normal compaction equipment.

The Contractor shall provide the traffic control to facilitate any coring operations necessary for compaction acceptance.

Cores will be taken per the Asphalt Concrete Coring Method. This method can be found in Section 321.14. Acceptance testing results will be furnished to the contractor within five working days of receipt of samples by the acceptance laboratory.

If the pavement density has in-place voids of between 4.0% and 8.0%, the asphalt concrete will be paid for at the contract unit price. If the acceptance core for a sublot indicates that the pavement density has in-place voids of less than 4.0% or greater than 8.0%, the deficient area will be evaluated by coring two additional locations at maximum intervals of 100 feet from the deficient core. The in-place voids of the original deficient core will be averaged with the in-place voids of the cores taken from 100 feet on each side of it to determine compliance with the acceptance requirements. If the resulting average of the in-place voids is outside the indicated range, then Table 321-8 shall apply to the sublot. If approved by the Engineer, the Contractor may obtain additional cores to assist in formulation of an Engineering Analysis, but the additional cores shall not be used for re-evaluating acceptance.

TABLE 321-8		
PAVEMENT DENSITY PENALTIES		
Limits of In-place Air Voids for design lift thicknesses 1.5 inches and greater	When the contracting agency is the owner Payment Reduction ($ per ton of asphalt concrete)	When the contracting agency is not the owner i.e. permits Corrective Action
Below 3.0%	Removal* or EA	Removal* or EA
3.0% to below 4.0%	$10.00	EA and Type II Surry Seal
4.0% to 8.0%	Full Payment	No Corrective Action
Greater than 8.0% to less than 9.0%	$6.00	EA
9.0% to 10.0%	$10.00	EA and Type II Surry Seal
Greater than 10.0%	Removal* or EA	Removal* or EA

NOTES: *The Contractor shall remove and replace the entire sublot that is deficient.
EA = Engineering Analysis per Section 321.10.6

321.10.6 Engineering Analysis (EA): Within 10 working days after receiving notice that a lot or sublot of asphalt concrete is deficient and is found to fall within the "Removal or EA" band per Table(s) 321-4, 321-5, and/or 321-8, the contractor may submit a written proposal (Engineering Analysis) to accept the material in place at the applicable penalties along with possible remediation(s) listed in the "Removal or EA" category. Engineering Analysis can also be proposed for non-removal categories of "Corrective Actions" when the contracting agency is not the owner (i.e. permits).

The Engineering Analysis shall contain an analysis of the anticipated performance of the asphalt concrete if left in place. The Engineering Analysis shall also detail the effect of any proposed corrective action to the material(s) in place as it relates to the in-place material's performance. The Engineering Analysis shall be performed by a professional engineer experienced in asphalt concrete testing and mix designs.

If a lot or sublot is accepted for referee testing and the referee test results still show a deficiency, the contractor shall have ten working days to submit an Engineering Analysis beginning upon notification of referee test results.

When an Engineering Analysis recommends that a specific lot or sublot should not be removed, the Engineering Analysis will recommend that the following penalties (Table 321-9) be paid when the contracting agency is the owner, for the specific criteria being reviewed by the EA.

TABLE 321-9		
ENGINEERING ANALYSIS PENALTIES for REMOVAL* LOTS/SUBLOTS LEFT IN-PLACE		
Acceptance Criteria	**Acceptance Limits**	**Penalty When Contracting Agency is the Owner ($/Ton)**
Asphalt Binder Content	Over 0.2% points from that Permitted	$9.00
Laboratory Air Voids (Measured at N_{des} or 75 blows as applicable)	Less than 1.5% or Greater Than 8.0%	$7.50
Limits of In-place Air Voids	Less than 3% or Greater than 10.0%	$15.00

Within 15 working days, the Engineer will determine whether or not to accept the Contractor's proposed Engineering Analysis.

321.11 REFEREE:

If the Contractor has reason to question the validity of any of the acceptance test results, the Contractor may request that the Engineer consider referee test for final acceptance. Any request for referee testing must describe the contractor's reasons for questioning the validity of the original acceptance test results and must clearly describe which set of acceptance tests are in question. The Engineer may either accept or reject the request for referee testing. When referee testing is accepted the Contractor (at the Contractors own expense) will engage an independent laboratory accredited by the AAP or a laboratory listed in the current ADOT Directory of Approved Materials Testing Laboratories as appropriate the acceptance tests that are being questioned. The independent referee laboratory shall use properly certified technicians in accordance with ASTM D3666, Section 7 (Personnel Qualifications). For the set of test results in question, the referee laboratory shall perform a new set of acceptance tests (as required by Section 321.10 representing the area for the set of tests in question). The referee tests will replace the original acceptance tests that were in question.

For permit work, the permittee, whose results necessitate referee testing, shall bear all expenses in the additional testing (i.e., secondary and the referee testing) if the original results are not substantiated by the referee testing procedure outlined in this section. Additionally, any testing performed that does not strictly adhere to the sampling and testing methodology and requirements in Section 321.10 shall be disregarded and not allowed in any acceptance determination. Disregarded tests will be re-performed at the expense of the permittee.

These tests may include asphalt binder content, aggregate gradation, Marshall or Gyratory unit weight, maximum theoretical unit weight, laboratory air voids and in-place air voids (compaction). All referee testing shall conform to Section 321.10. Samples for referee testing shall come from representative samples obtained from the completed pavement, as directed by the Engineer.

The number of samples taken will be the same as specified in Section 321.10. The independent laboratory shall compile the test results and transmit them to both the Engineer and the contractor. The independent laboratory shall include a report sealed and signed by an Engineer registered in the State of Arizona, who is experienced in asphalt concrete testing and mix design development. The signed report shall give an opinion that the material evaluated does or does not comply with project specifications, shall clearly describe any deficiencies, and the results will be binding between all parties.

321.12 MEASUREMENT:

Asphalt concrete pavement will be measured by the ton, or by the square yard, for the mixture actually used as allowed above, which shall include the required quantities of mineral aggregates, asphalt binder, and mineral admixture. Measurement shall include any tonnage used to construct intersections, roadways, streets, or other miscellaneous surfaces indicated on the plans or as directed by the Engineer.

Measurement for safety edge preparation only applies to overlays of existing pavements that require the construction of a safety edge when none exists. Safety edge preparation will be measured by the linear foot. Safety edge preparation will not be measured when a safety edge is part of new pavement construction, pavement widening, or when overlaying an existing pavement that contains a safety edge. The asphalt concrete pavement measurement shall include the tonnage used to construct safety edges or the square yard measurement for asphalt concrete pavement will be increased by the horizontal extension of the safety edge beyond the roadway pavement edge.

321.13 PAYMENT:

The asphalt concrete measured as provided above will be paid for at the contract price per ton or square yard, as adjusted per Section 321.10, which price shall be full compensation for the item complete, as herein described and specified.

Payment for tack coat will be by the ton diluted, based on the rate of application, as directed by the Engineer.

No payment will be made for any overrun in quantity of asphalt concrete in excess of 10 percent for newly constructed pavement having a total thickness equal to or greater than 2.5 inches. The overrun quantity is excess tonnage above the tonnage calculated based on actual field measurement of area covered, design thickness, and the mix design unit weight. The calculations for overrun will be by individual pay item. To compensate or adjust for a thickness deficiency in an underlying asphalt concrete

course, the Engineer may authorize a quantity increase in excess of 10 percent for a subsequent asphalt concrete course. In such cases, the quantity in excess of 10 percent will be paid for at the lowest unit price.

Removal of raised pavement markers, pavement repairs, and surface pavement replacements required prior to roadway overlay operations will be paid for by other pay items unless otherwise specified.

Except as otherwise specified, no separate payment will be made for work necessary to construct thickened edges, safety edges, or other miscellaneous items or surfaces of asphalt concrete.

Payment for safety edge preparation will be at the contract unit price for the quantities measured as described above.

321.14 ASPHALT CORE METHOD: Core Drilling of Hot Mix Asphalt (HMA) for Specimens of 4" or 6" diameter

321.14.1 Scope: This method is to establish a consistent method of the use of a diamond bit core to recover specimens of 4 or 6 inch diameter for laboratory analysis and testing. The method will require the use of: water, ice (bagged or other suitable type), dry ice, and a water-soap solution to be utilized when coring asphalt rubber concrete. Individuals doing the specimen recovery should be observing all safety regulations from the equipment manufacturer as well as the required job site safety requirements for actions, and required personal protective equipment.

For permit work, testing of cores obtained in a manner that does not strictly adhere to the methodology outlined in this section shall be disregarded and not considered in any acceptance determination. Retesting shall be at the expense of the permittee.

321.14.2 Core Drilling Device: The core drilling device will be powered by an electrical motor, or by an acceptable gasoline engine. Either device used shall be capable of applying enough effective rotational velocity to secure a drilled specimen. The specimen shall be cored perpendicularly to the surface of pavement, and that the sides of the core are cut in a manner to minimize sample distortion or damage. The machinery utilized for the procedure shall be on a mounted base, have a geared column and carriage that will permit the application of variable pressure to the core head and carriage throughout the entire drilling operation. The carriage and column apparatus shall be securely attached to the base of the apparatus; and the base will be secured with a mechanical fastener or held in place by the body weight of the operator. The core drilling apparatus shall be equipped with a water spindle to allow water to be introduced inside of the drill stem while operating. The cutting edge of the core drill bit shall be of hardened steel or other suitable material with embedded diamond chips in the cutting surface. The core barrel shall be of sufficient diameter to secure a specimen that is a minimum of four or six inches or whichever is prescribed for necessary testing. The core barrel shall not be missing more than one of the teeth used for cutting; if so, it shall be discarded and another barrel shall be used. The core barrel shall also be a minimum of two inches longer than the anticipated depth of pavement in accordance with project paving plans.

321.14.3 Accessory Equipment: A sufficient supply of ice and dry ice shall be provided to sufficiently cool the pavement prior to securing the samples from the designated areas in the pavement. The ice should also be used to adjust the temperature of the water used to cool the core bit. A water supply (usually a plastic 35 – 55 gallon drum) with sufficient hose to introduce the water into and through the spindle of the coring device by gravity feed. The drum should be white or light in color to minimize excessive thermal heating of the water (*for coring of asphalt rubber cores see Note 1*). At no time shall the water utilized in the coring operation exceed 65 degrees F during the coring operation. Ice shall be utilized to ensure the temperature control of the water being introduced during the cutting operation. An ice chest or other suitably insulated container that can maintain a temperature of less than 70 degrees F shall be used to secure the specimens during transport. The container will be equipped with flat shelving that will support the drilled cores throughout the entire specimen dimension during transport back to the testing facility.

Miscellaneous hand tools to remove the drilled specimen from the drill hole or the core barrel taking great care in not disturbing the specimen more than necessary (refer to fig. 1 in ASTM D5361).

321.14.4 Process: The pavement surface at the time of coring shall not exceed a temperature of 90 degrees F; the pavement shall be conditioned with ice or dry ice to ensure that this requirement is met. Immediately after it has been ensured that the pavement has dropped to the required temperature, core drilling shall begin. The operator will then apply an even and continuous pressure (Note 2) to penetrate through the full depth of the pavement. The operator will concurrently ensure that enough water is moving over the core surface as to adequately remove any and all cuttings that could damage the drilled core.

After the pavement thickness has been penetrated, the core shall be carefully removed from either the drill hole or the core barrel and be immediately transferred to an ice chest or other suitable container. Each individual core shall be placed on a shelf in the cooler with the exposed side of the specimen facing down, or the "top side" down. If the specimen is a two-lift core, the only acceptable means of separating lifts is with a power or other acceptable wet saw type of equipment (conforming to ASTM D5361); however, at no time shall cores be split using a mallet and screwdriver or metal straight edge when being tested for bulk density. Perpendicularity of the specimen shall be checked in the field after the specimen has been extracted from the surface. The core operator shall hold the core up to eye level and place the core top side down in a "speed square" or small carpenters square. The specimen placed in the square shall not depart from perpendicular to the axis more than 0.5º (approximately equivalent to 1/16 of an inch in 6 inches). If the specimen is outside of this distance from square, it shall be discarded in the field and another sample cored that falls within tolerance. The cores upon arriving at the laboratory for testing shall be carefully cleaned and measured for thickness in accordance with ASTM D3549. A speed square shall be used to measure perpendicularity as compared to a 90 degrees angle and shall not depart from perpendicular to the axis more than 0.5 degrees (approximately equivalent to 1/16 of an inch in 6 inches). All remaining testing shall be done within the parameters of the current project and/or agency required specification.

The core operator that obtained the cores is responsible for restoration of the core holes at the conclusion of the coring process. Immediately before restoration, standing water and errant debris shall be removed from the holes. Core holes shall be patched back with an agency-approved material. One typical material is hot mix asphalt conforming to Section 710, compacted in thin (1.5 inch) lifts with the temperature compaction range as specified on the mix design, or as established by the binder supplier. Another typical material is pre-packaged non-shrink grout conforming to ASTM C1107. If non-shrink grout is used, the individual restoring the core holes is responsible for protecting the finished work from tire traffic, etc. Other patch materials maybe used at the discretion of the Engineer.

- End of Section -

*Note 1 – It should be noted that when the material to be cored is a rubberized asphalt mixture a wetting agent such as liquid dish soap be added to the water barrel to hinder the material from sticking or allowing the binder to spread during coring.
*Note 2 – This refers to pressure exerted on the core barrel and machine during the coring process. Too much pressure can cause damage to the core barrel and the motor; and too little pressure can cause a glazing of the diamonds, reducing cutting efficiency and premature wear of the barrel.

SECTION 324

PORTLAND CEMENT CONCRETE PAVEMENT (PCCP)

324.1 DESCRIPTION:

This item shall consist of construction of a pavement composed of plain jointed Portland cement concrete on a prepared subgrade. The Contractor shall furnish all labor, materials and equipment necessary for the construction of the pavement in accordance with these specifications and in reasonably close conformity to the lines, grades, thicknesses and details indicated by the plans or as established by the Engineer. All tests shall be performed by a laboratory approved by the Engineer.

324.2 MATERIALS:

324.2.1 Portland Cement Concrete: Portland cement concrete shall conform to the applicable requirements of Section 725 and the additional requirements of this section.

Concrete shall comply with Table 725-1 for Class AA, 4000 psi unless otherwise specified by the Engineer.

The maximum concrete slump shall be as determined by the approved mix design in accordance with Section 725.9(A)(1).

324.2.2 Reinforcement: Tie bars shall be deformed billet steel reinforcing bars conforming to the requirements of ASTM A615, Grade 40.

Dowel or load transfer bars shall conform to the requirements of ASTM A615, Grade 40. An approved support system shall be used to hold bars in position.

324.2.3 Curing Materials: Materials for curing concrete shall conform to the requirements of Section 726.

324.2.4 Joint Materials: Joint sealant shall be poured type, conforming to the requirements of Section 729.2 or as approved by the Engineer. Preformed expansion joint filler shall conform to the requirements Section 729.1 or as approved by the Engineer.

324.3 CONSTRUCTION METHODS:

324.3.1 General: Pavement shall be constructed with mechanical equipment utilizing stationary side forms or by the use of slipform paving equipment without stationary side forms. Manual methods of placing and finishing concrete with stationary side forms may be permitted by the Engineer for areas inaccessible for mechanical equipment.

All curb and gutter shall have the same class of concrete as the adjacent PCCP. Gutter sections shall have the same thickness as the PCCP section. All curbs or combined curb and gutter joints shall align with roadway joints.

324.3.2 Equipment: Design, capacity, and mechanical condition of equipment and tools necessary for handling materials and performing all parts of the work shall be approved by the Engineer. Equipment shall be at the jobsite sufficiently ahead of the start of concrete paving operations to permit thorough examination and approval by the Engineer prior to start of concrete paving.

Equipment used to place concrete may consist of one or more machines, shall be capable of uniformly distributing and consolidating the concrete as it is placed without segregation and shall be capable of producing concrete pavement, which will conform to the required cross-section with a minimum of hand work. The number and capacity of machines furnished shall be adequate to perform the work required at a rate equal to the concrete delivery rate.

Vibrators shall be used to consolidate concrete; the rate of vibration shall be not less than 3,500 cycles per minute for surface vibrators and not less than 8,000 cycles per minute for internal vibrators. Power to vibrators mounted on mechanical equipment shall be so connected that vibration ceases when forward or backward motion of the machine is stopped. Contractor shall furnish a tachometer or other suitable device for measuring and indicating the frequency of vibration.

Slipform pavers shall be equipped with high frequency internal vibrators mounted with axes either parallel or normal to pavement alignment for the full paving width. Vibrators mounted with axes parallel with pavement alignment shall be spaced at intervals not to exceed 24 inches, measured center-to-center. Vibrators mounted with axes normal to pavement alignment shall be spaced so that lateral clearance between individual vibrating units does not exceed 6 inches.

Slipform paving equipment which will be wholly or partially supported on subgrade shall be equipped with traveling side forms of sufficient dimensions, shape and strength to support the concrete at free edges laterally for a sufficient length of time during placement to produce pavement of the required cross-section, and shall be equipped and operate with automatic sensing and control devices such that the machine automatically senses deviations from the established guideline and performs the necessary corrective maneuvers to overcome variations from correct grade and alignment.

When concrete will be placed adjacent to existing pavement or curb and gutter, that part of the equipment supported on the existing pavement or curb and gutter shall be equipped with protective pads on crawler tracks or rubber-tired wheels with bearing surfaces offset a sufficient distance from the edge of the pavement or curb and gutter to avoid edge damage, or the surface of the existing pavement or curb and gutter shall be otherwise protected against such damage in a manner approved by the Engineer.

324.3.3 Subgrade and Base Preparation: Subgrade and base shall conform to the applicable compaction requirements of Section 601 and elevation tolerances specified for the material involved, shall be kept smooth and compacted, and shall be free of all loose and extraneous material when concrete is placed.

The surface of the subgrade shall be uniformly moist when concrete is placed. The surface of the subgrade shall be moistened immediately prior to placement of concrete, if necessary to produce a uniformly moist condition. Any excess water standing in pools or flowing on the surface shall be removed prior to placing concrete.

324.3.4 Stationary Side Forms and Setting of Forms: Side form sections shall be straight, free from warps, bends, indentations or other defects. Side forms shall be of metal, have a base width of at least four inches and a minimum depth equal to the thickness of the pavement. No section shall show a variation from a true plane greater than 1/8 inch in ten feet on the top of the form or more than 1/4 inch in ten feet on the inside face. Flexible or curved forms of proper radius shall be used for curves of 100 feet radius or less. Suitable materials other than metal may be used to form end closures or at other locations where use of metal forms is not practical. Forms shall be thoroughly cleaned and oiled each time they are used.

Forms shall be of such cross-section and strength and so secured and supported on the subgrade as to resist the pressure of the concrete when placed and the impact and vibration of any equipment they are to support without springing or settlement. The method of connection between sections shall be such that the joints shall not move in any direction.

Subgrade under forms shall be compacted and cut to grade so that the form when set will be uniformly supported for its entire length at the specified elevation. Forms shall be so supported and secured during the entire operation of placing and finishing that they will not deviate vertically at any point more than 1/8 inch from the proper elevation. Forms shall be set to the required lines and grades well in advance and for a distance sufficient to prevent delay in placing concrete, and shall be approved by the Engineer prior to placing concrete. When any form has been disturbed or any grade has become unstable, the form shall be reset and rechecked.

Side forms shall remain in place until the day after placing concrete, and in all cases until the edge of the pavement no longer requires the protection of the forms. Forms shall be carefully removed in such a manner as to avoid damage to the pavement. Use of pry bars between the pavement and the forms will not be permitted.

324.3.5 Placing, Spreading and Compacting: Construction equipment shall not operate on the subgrade in the paving lane when conditions of the job will permit operation from outside the lane. When job conditions make it necessary to operate equipment on the subgrade in the paving lane, suitable runways or other precautions shall be taken to prevent rutting or displacement of subgrade material. The grade shall be checked and corrected immediately ahead of concrete placement and all disturbed grade shall be properly recompacted. Except when otherwise approved by the Engineer, concrete shall be deposited on the subgrade and spread full width using mechanical methods that result in minimal handling and segregation.

Necessary hand spreading shall be done with shovels, not rakes. Placement shall be continuous between transverse joints without the use of intermediate bulkheads.

The Contractor shall make adequate advance arrangements for preventing delay in delivery and placing of concrete. An interval of more than 15 minutes between placing of any two consecutive batches shall constitute cause for stopping operations, and Contractor shall remove all concrete placed beyond the last scheduled joint or install a joint of the type and at the location as directed by the Engineer.

Concrete shall be deposited as near to expansion and construction joints as possible without disturbing them but shall not be dumped onto a joint assembly. Concrete shall be thoroughly consolidated against and along the faces of all forms, adjacent pavement or curb and gutter, and on both sides of all joint assemblies. Vibrators shall not be permitted to come in contact with joint assemblies, the grade, or side forms, and shall not be operated longer than 15 seconds in any one location.

Manual methods of placing, spreading, and compacting may be used in the construction of pavement lanes of irregular width or widths less than 10 feet, and sections of intersections or other locations with complex variable surface configurations when permitted by the Engineer. Workmen shall not be allowed to walk in the freshly placed concrete.

324.3.6 Shaping and Initial Finishing: Concrete shall be struck off, consolidated, and float-finished with a slipform paver, mechanical finishing machine, vibrating screed, or by hand finishing methods when approved by the Engineer so that the complete pavement will conform to the thickness and cross-section requirements of the plans and specifications. When the pavement being constructed is contiguous to existing parallel concrete pavement or curb and gutter, the elevation of the new pavement surface shall conform as closely as possible to the elevation of the existing pavement or gutter surface in a manner that will prevent ponding. The difference in elevation shall not exceed 1/4 inch.

Water shall not be applied to the pavement surface during screeding and finishing operations in excess of the amount lost by evaporation. Adding water to the surface of the concrete to assist in finishing operations shall not be permitted. When applications of water to the surface are required to prevent rapid evaporation of water from the surface during finishing operations, it shall be applied as a fog spray and with approved spray equipment.

(A) Slipform Supported on Subgrade Method: When concrete pavement will be placed with slipform paving equipment which will be supported and operate on the subgrade, the subgrade and slipform paver track area shall be brought to proper grade and cross-section by means of a properly designed and operated machine. The equipment shall spread, consolidate, screed and float-finish the concrete in one complete pass of the machine. The machine shall be operated with as nearly a continuous forward movement as possible, and all paving operations shall be so coordinated as to provide uniform progress with stopping and starting of the paver held to a minimum. Sliding side forms shall be rigidly held together to prevent spreading. Any edge slump of the pavement, exclusive of edge rounding, in excess of 1/4 inch shall be corrected.

No abrupt changes in longitudinal alignment of the pavement will be permitted. The horizontal deviation shall not exceed one inch from the alignment established by the Engineer.

While concrete is being spread, compacted and shaped, vibrating units shall be operated within fresh concrete so that the longitudinal axis, at the center of each unit, is not more than 6 inches above the top of the subgrade. Amplitude of vibration shall be sufficient to be perceptible on the surface of concrete along the entire length of vibrating units and for a distance of at least one foot.

(B) Mechanical Equipment Supported on Fixed Form Method: When concrete is spread without the use of internal vibration, the finishing machine shall be equipped with vibrating equipment that will internally vibrate the concrete for the full paving width and with not less than two oscillating or reciprocating screeds. Concrete shall be struck off and consolidated so that the surface will conform to the finished grade and cross-section shown on the project plans and with sufficient material on the surface for floating operations.

After the concrete has been struck off and consolidated, it shall be floated with a longitudinal float of a type approved by the Engineer.

A slipform paver or a single machine, which will effectively spread, consolidate, screed, and float in one operation may

be used in lieu of separate finishing and floating equipment.

(C) Manual Methods with Fixed Forms: Concrete shall be deposited, spread and struck off to such an elevation that, when properly consolidated, the surface will conform to the required lines and grades. Concrete shall be consolidated by internal vibration as it is struck off with a screed. A slight excess of concrete shall be kept in front of the screed at all times during the strike-off operation.

After consolidation and screeding, concrete shall be tamped to the proper surface elevation and cross-section using either a heavy plank with a length in excess of the width of pavement being placed by one foot or more, or with a mechanical vibrating unit spanning the full width between forms. The tamping plank, if used, shall be stiffened as necessary to prevent sag and shall have the lower tamping edge shod with metal. The tamping plank shall be moved forward with a combined vertical tamping and longitudinal screeding motion so that the concrete will be thoroughly consolidated and the surface screeded to the required elevation. A small surplus of concrete shall be kept in front of the tamper or vibrating unit. Tamping or vibrating shall continue until the specified cross-section is obtained and the mortar flushed slightly to the surface. On grades in excess of 5 percent a second strike board shall follow from 25 to 50 feet behind the tamper or vibrating unit and shall be used in the same manner to remove waves caused by the flow of concrete behind the first strike board.

Methods other than the tamping plank may be utilized for screeding when approved by the Engineer.

Pavement shall be finished smooth and true to grade with suitable manually operated floats or powered finishing equipment.

324.3.7 Final Finishing: After the pavement has been float-finished, it shall be scraped with a 10-foot long straightedge equipped with a handle to permit operations from the edge of the pavement, and excess water and laitance shall be removed from the surface. The straightedge shall be operated parallel to the centerline of the pavement and shall be moved forward one-half length after each pass. Irregularities shall be corrected by adding or removing concrete, and disturbed places shall be again straight-edged.

Long-handled floats shall be used only in areas not accessible to finishing equipment and in emergencies, and use of such floats shall be confined to a minimum.

The addition of water to the surface of the concrete to assist in finishing operations shall not be permitted unless approved by the Engineer. When the evaporation rate on the concrete surface exceeds the rate of bleeding of the concrete, measures shall be taken to prevent the rapid evaporation of water from the surface during finishing operations. When allowed by the Engineer, the addition of water to the surface may be permitted when applied as a fog spray with approved spray equipment immediately after screeding and/or between finishing operations. A commercial evaporation reducer that forms a monomolecular film may also be sprayed onto the concrete surface in accordance with the Manufacturer's recommendations. When either of these methods is approved and used, it does not take the place of proper curing methods per Section 324.3.8.

Pavement edges and joints shall be edged in accordance with details shown on the project plans or as directed by the Engineer.

In advance of curing operations, pavement shall be textured. Texturing shall be performed with an artificial turf drag with a board added to assure the weight needed to obtain an approved surface. Artificial turf shall be a molded composite structure with polyethylene face, nylon and polyester backing, a pile height of 0.85 inches, and total weight of 75 oz./sq. yd. The surface obtained during initial surface texturing shall be subject to approval by the Engineer. The texturing approved on the initial construction shall not be changed without the Engineer's approval. Each time the construction is stopped or causes the texturing to stop, the artificial turf must be shaken clean before continuing.

324.3.8 Curing: Curing shall begin immediately following surface texturing and edging. Before concrete placement begins, Contractor shall have at hand and ready to install the materials and equipment needed for adequate curing.

After finishing operations have been completed, the newly placed concrete shall be cured by moist curing methods, by application of a white pigmented liquid membrane compound conforming to the requirements of Section 726, or by a combination of these methods. All surfaces not covered by reasonably waterproof forms shall be kept damp by applying water with a nozzle that so atomizes the flow of water that a fog mist and not a spray is formed until the surface is covered with liquid

membrane compound, the surface has hardened sufficiently to permit sprinkling of the surface, or moist curing by covering with wet burlap or other approved materials can be initiated. Moisture from the nozzle shall not be applied under pressure directly upon the concrete and shall not be allowed to accumulate on the concrete in a quantity sufficient to cause a flow and erode the surface. Moist curing shall be continued until liquid membrane curing compound or other type of curing membrane is applied.

Membrane curing compound shall be applied to all pavement by automatic mechanical method from a construction bridge.

The edges of concrete slabs exposed by the removal of forms shall be protected immediately to provide these exposed surfaces with continuous curing treatment equal to the method selected for curing the pavement surface.

The membrane method of curing may be applied behind the final finishing operation after all free water has disappeared from the surface. Complete and uniform coverage at the rate of one gallon per 100 square feet, or as otherwise recommended by the manufacturer, shall be required. Compound shall be kept agitated to prevent pigment from settling.

324.3.9 Joints: Joints shall be provided in the pavement of the type, dimensions and at the locations as indicated in the plans or as specified herein. Joints in concrete pavement will be designated as transverse expansion joints, longitudinal or transverse construction joints, longitudinal or transverse weakened plane joints, or isolation joints. The faces of all joints shall be perpendicular to the pavement surface. Joints shall be constructed in accordance with the details shown or referenced in the plans and in accordance with the following provisions.

At all times prior to acceptance of the construction, joints shall be maintained clean and free of soil, gravel, and other foreign material except approved types of joint filler materials.

(A) Longitudinal Joints: Longitudinal joints shall be weakened plane or construction joints. Longitudinal weakened plane joints shall be constructed by sawing or by insertion of a parting strip in the plastic concrete to be left in place. Longitudinal construction joints shall be constructed with tie bars or keyways as indicated in the plans.

(B) Transverse Joints: Transverse joints shall be weakened plane, construction or expansion joints. All transverse weakened plane joints will be constructed by sawing and in accordance with the details shown in the project plans. Transverse construction joints shall be constructed in accordance with the details shown or referenced in the project plans. Transverse expansion joints shall be constructed in accordance with the details shown or referenced in the project plans.

Dowel bars when required shall be supported with an approved support system.

(C) Joint Location: Longitudinal and transverse joints shall be constructed at locations as indicated in the project plans. Isolation joints shall be provided around manholes, catch basins, or other elements, which extend into or project through the pavement and act as point of restraint to horizontal or vertical movement of the pavement. Isolation joints shall be located in accordance with Detail 224 or as directed by the Engineer.

324.3.9.1 Construction of Joints:

(A) Sawed Joints: Sawed joints shall be constructed by cutting a groove in the pavement using a single or multiple-blade power saw. The groove shall be cut to the dimensions shown on the project plans. Suitable guidelines or devices shall be used to ensure joints are cut true to the lines as shown on the project plans.

If joints are sawed in stages, the initial saw cut shall be of the minimum width specified and sawed to the required depth. The depth of the initial saw cut in the construction of weakened plane joints shall be a minimum of 1/4 of slab thickness.

Sawing of weakened plane joints shall be done before uncontrolled cracking takes place, and after the concrete has hardened to the extent that tearing or raveling of the edges of the saw cut is not excessive. The exact time for all sawing shall be determined by the Contractor when not otherwise specified.

Any procedure for sawing joints that result in premature, uncontrolled cracking shall be revised immediately. The Contractor shall be responsible for replacing or repairing areas containing uncontrolled cracking and for repairing spalled or chipped concrete along the edges of sawed joints to the satisfaction of the Engineer.

After saw cutting of the joint and just prior to sealing the joint, the internal joint surfaces shall be cleaned of all dirt, curing compound residue, laitance and other foreign materials. The internal joint surface shall be defined as the sawed portion of the joint and the resultant crack for the full depth of the pavement.

Sealing of sawed joints where required shall be completed prior to the opening of the pavement to traffic unless otherwise approved by the Engineer. When delayed sealing of sawed joints is permitted, saw cuts and formed recess to be filled with sealant shall be protected to ensure thorough curing of the concrete along the edges of the joint recesses and to prevent entry of foreign materials into the joint. At the Contractor's option, inert compressible joint filler material such as plastic backer rod or upholstery cord may be inserted into joints immediately after sawing or forming of the joint recess to provide curing protection and prevent entry of foreign material. If absorptive filler material is used, it shall be thoroughly moistened either before or immediately after installation in the sawed groove. When filler material is rope, or similar material which does not fill the entire depth of sawed groove, it shall be depressed not less than 1/2 inch below the pavement surface before the pavement is opened to traffic.

(B) Expansion and Construction Joints: Longitudinal and transverse expansion and construction joints shall be as required by the project plans.

(C) Isolation Joints: Isolation joints unless otherwise detailed in construction documents shall be 1/2 inch wide expansion joints in accordance with Detail 224 or as directed by the Engineer.

(D) Sealing of Joints: Sealant shall be applied in accordance with the sealant manufacturer's recommendations. A primer shall be furnished and applied after the joint has been cleaned and prepared to receive sealant when indicated in the manufacturer's recommendations.

Prior to the application of the sealant, an approved type of inert, compressible joint filler material such as plastic backer rod or upholstery cord, or an approved type of bond breaker, shall be inserted along the joint in accordance with the details shown on the project plans. The joint shall then be filled with sealant to a level not less than 1/8 inch or more than 1/4 inch below the elevation of the pavement surface adjacent to the joint edge.

The equipment used to apply sealant shall be as recommended by the sealant manufacturer. Sealant shall not be spilled on the surface of the concrete pavement, and Contractor shall remove any sealant inadvertently spilled on the pavement surface.

(E) Repair of Cracks, Spalls, Raveling and Tearing: Contractor shall be responsible for replacing or repairing all areas of pavement containing uncontrolled cracking, surface spalls, or other types of surface. Repairs when authorized shall be made and completed by methods acceptable to the Engineer.

324.4 TESTS OF FINISHED PAVEMENT:

324.4.1 Smoothness: The pavement surface including pavement in intersections will be tested with a ten-foot straight-edge placed parallel to the centerline of the pavement in each lane. Ordinates measured from the face of the straight-edge to pavement surface shall at no place exceed one-quarter inch. Areas that do not meet the required surface accuracy as determined by straight-edge testing shall be marked, and Contractor shall at his own expense and as required by the Engineer either:

(1) Grind down areas higher than 1/4 inch but not more than 1/2 inch above the correct surface.

(2) Correct areas lower than 1/4 inch but not lower than 1/2 inch below the correct surface by grinding down the adjacent areas.

(3) Remove and replace pavement when the deviation exceeds 1/2 inch from the correct surface. Area replaced shall be of a length, width and depth as required to allow formation of a new slab of the required quality. The area replaced shall be compatible with the joint layout shown on the project plans as determined by the Engineer.

After grinding, the finished surface of the ground area shall be provided with a uniform texture acceptable to the Engineer. The method of texturing shall be approved by the Engineer.

324.4.2 Pavement Thickness: Concrete pavement shall be constructed in accordance with the thickness requirements of the plans and specifications. Tolerances for base and subgrade construction and other provisions of these specifications, which may affect thickness, shall not be construed to modify such thickness requirements.

Pavement thickness testing shall begin after achieving pavement smoothness compliance. For the purpose of determining acceptability for thickness, cores shall be drilled by the Contractor at the locations specified by the Engineer. Cores shall have a minimum diameter of four inches. Length of cores will be determined in accordance with the requirements of AASHTO T-148.

In calculating average length, cores that have a length in excess of the thickness specified by more than 0.25 of an inch, will be deemed to have a length of the specified thickness plus 0.25 of an inch. Field length measurements will be acceptable in lieu of average length measurement in accordance with the requirements of AASHTO T-148, provided the original core in any secondary unit meets or exceeds the specified thickness. Measurements in accordance with the requirements of AASHTO T-148 will be required on any questionable thickness measurements and on the three cores used to determine the average length for payment, regardless of length.

A primary unit of pavement shall be the area of pavement placed in each day's paving operation. Each intersection or special section shall be considered as a primary unit. A secondary unit of pavement shall consist of 1,000 linear feet, or fraction thereof, of each traffic lane. Each 1,300 square yards of pavement in intersections, etc., shall be considered a secondary unit regardless of when the concrete was placed.

One core shall be drilled in each secondary unit. If the length of that core is not deficient by more than 0.25 of an inch, that secondary unit will be measured for payment at 100 percent. If the length of that core is deficient by more than 0.25 of an inch but less than 1.0 inch, two additional cores shall be drilled within that secondary unit and the length of the three cores averaged. If the average length is not deficient by more than 0.25 of an inch, that secondary unit will be measured for payment at 100 percent. If the average length of the three cores is deficient by more than 0.25 of an inch, that secondary unit will be measured for payment in accordance with the requirements of Table 324-1.

If the core in the secondary unit is deficient by more than 1.00 inch, that core will not be used in determining the average thickness of that secondary unit. Additional cores shall be drilled at intervals not to exceed ten feet in each direction from the deficient core, parallel to the main-line centerline, until one core is obtained in each direction that is not deficient by more than 1.00 inch. The pavement between these two cores will be evaluated separately from the balance of the pavement in that secondary unit. The limits for evaluation shall be between the longitudinal weakened plane or construction joint on each side of the core and between the next transverse weakened plane, construction, or expansion joint beyond each of the last two cores. Unless the Engineer allows the pavement to remain, it shall be removed and replaced with pavement of the specified thickness and no payment will be made for the removed pavement.

If the pavement in the deficient area is removed, either by the order of the Engineer or at the option of the Contractor, it shall be removed between the limits of the evaluation. After the pavement has been replaced, one core shall be drilled at random in that secondary unit after deducting the area of the replaced pavement and one core shall be drilled in the new pavement. Pavement represented by the core drilled in the secondary unit, less the replaced pavement, will be measured for payment as hereinbefore specified. The core drilled in the replaced pavement shall be not less than the specified thickness; otherwise, that pavement will not be measured or paid for.

At all locations where cores have been drilled, the resulting holes shall be filled with concrete in a manner satisfactory to the Engineer.

324.5 PROTECTION OF PAVEMENT:

The Contractor shall be responsible for taking adequate steps to protect concrete placed during rain, or hot or cold weather as defined in ACI Standards. Any concrete damaged by rain or extreme temperatures shall be removed and replaced at the Contractor's expense.

When ordered by the Engineer, pavement crossings shall be constructed for the convenience of public traffic. Where motor vehicles are encountered, a temporary bridge to span the newly placed concrete will be provided.

No traffic or Contractor's equipment, except as hereinafter provided, will be permitted on the pavement until the concrete has developed a compressive strength of 3500 psi.

Equipment for sawing joints will be permitted on the pavement when, in the Contractor's judgment, the concrete has developed sufficient strength to support the equipment without damage to the concrete. In case of visible cracking or other damage to the pavement, operation of the equipment on the pavement shall be immediately discontinued.

Any damage to the pavement resulting from early use of pavement by the Contractor's equipment shall be repaired by the Contractor at his expense.

324.6 METHOD OF MEASUREMENT:

Portland Cement Concrete Pavement will be measured by the square yard. Any opening in excess of one square yard will not be measured for payment.

324.7 BASIS OF PAYMENT:

The accepted quantities of Portland Cement Concrete Pavement, measured as provided for herein, will be paid for at the contract unit price complete in place, except that where the average length of cores indicates pavement deficient in thickness by more than 0.25 of an inch but not more than 1.00 inch, payment will be made as specified in Table 324-1. Payment will be made to the nearest cent.

No additional payment will be allowed for pavement constructed in excess of the thickness specified on the project plans.

TABLE 324-1

PAVEMENT THICKNESS PAYMENT REDUCTION (PCCP)

Core Thickness, Less Than Specified Thickness, Inches	Percent of Contract Unit Price Allowed
0.00 to 0.25	100
0.26 to 0.35	93
0.36 to 0.45	85
0.46 to 0.55	75
0.56 to 0.75	63
0.76 to 1.00	50

- End of Section -

SECTION 710

ASPHALT CONCRETE

710.1 GENERAL:

Asphalt concrete shall be a mixture of asphalt cement and mineral aggregates. Mineral admixture shall be included in the mixture when required by the mix design or by the Engineer. Asphalt concrete shall be produced in accordance with Section 321.

The designation for asphalt concrete mixes shall be based on the nominal maximum aggregate size of the mix. The applicable mix designations are 3/8 inch, 1/2 inch, 3/4 inch. Each mix shall be designed using Marshall or Gyratory compaction methods.

The following table (Table 710-1) displays the recommended range for lift thickness for various asphalt concrete mix designations found within Section 710. Please note that the minimum lift thicknesses are based on each mix designation's "Nominal Aggregate Size" and the relative coarseness of its gradation. The compacted thickness of layers placed shall not exceed the Maximum Lift Thickness of Table 710-1 except as otherwise provided in the plans and specifications, or if approved in writing by the Engineer.

TABLE 710-1

RECOMMENDED LIFT THICKNESS FOR ASPHALT CONCRETE MIXES

Asphalt Concrete Mix Designation (inches)	Minimum Lift Thickness Marshall Mixes	Maximum Lift Thickness Marshall Mixes	Minimum Lift Thickness Gyratory Mixes	Maximum Lift Thickness Gyratory Mixes
3/8"	1.0 inches	2.0 inches	1.5 inches	3.0 inches
1/2"	1.5 inches	3.0 inches	2.0 inches	3.0 inches
3/4"	2.5 inches	4.0 inches	3.0 inches	4.0 inches

710.2 MATERIAL:

710.2.1 Asphalt Binder: The asphalt binder specified in this section has been developed for use in desert climate conditions. When used in other climates, consideration should be given to adjustments in the asphalt binder selection. The asphalt binder shall be Performance Grade Asphalt conforming to the requirements of Section 711 for PG 70-10, unless otherwise approved by the Engineer or specified differently in the plans or special provisions.

710.2.2 Aggregate: Coarse and Fine aggregates shall conform to the applicable requirements of this section. Coarse mineral aggregate shall consist of crushed gravel, crushed rock, or other approved inert material with similar characteristics, or a combination thereof, conforming to the requirements of these specifications.

Coarse aggregate for hot mix asphalt is material retained on or above the No. 4 sieve and Fine aggregate is material passing the No. 4 sieve. Aggregates shall be relatively free of deleterious materials, clay balls, and adhering films or other material that prevent coating with the asphalt binder. Coarse and Fine aggregates shall conform to the following requirements when tested in accordance with the applicable test methods.

TABLE 710-2 COARSE/FINE AGGREGATE REQUIREMENTS		
Characteristics	Test Method	Requirements
Fractured Faces, % (Coarse Aggregate Only)	Arizona 212	85, 1 or more 80, 2 or more
Uncompacted Voids, % Min.	AASHTO T-304, Method A	45
Flat & Elongated Pieces, % 5:1 Ratio	ASTM D4791	10.0 Max.
Sand Equivalent, %	AASHTO T-176	50 Min.
Plasticity Index	AASHTO T-90	Non-plastic
L.A. Abrasion, % Loss	AASHTO T-96	9 max. @ 100 Rev. 40 max. @ 500 Rev
Combined Bulk Specific Gravity	AI MS-2/SP-2	2.35-2.85
Combined Water Absorption	AI MS-2/SP-2	0-2.5%

Tests on aggregates used in asphalt concrete outlined above, shall be performed on materials furnished for mix design purposes and composited to the mix design gradation.

Blend sand (naturally occurring or crushed fines) shall be clean, hard and sound material, which will readily accept asphalt binder coating. The blend sand grading shall be such that, when it is mixed with the other mineral aggregates, the combined product shall meet the requirements of Table 710-2.

The natural sand shall not exceed 20 percent for the Marshall mixes and 15 percent for the Gyratory mixes by weight of the total aggregate for a mix.

710.2.3 Reclaimed Asphalt Pavement (RAP): When allowed by the Engineer, Reclaimed Asphalt Pavement (RAP), as defined in Section 701.5, may be used in asphalt concrete provided all requirements of Section 710 are met. References to use of RAP in Section 710 apply only if RAP is used as part of the mixture.

When RAP is used in asphalt concrete, it shall be of a consistent gradation, asphalt content, and properties. When RAP is fed into the plant, the maximum RAP particle size shall not exceed 1 1/2 in. The percentage of asphalt in the RAP shall be established in the mix design. The percentage of RAP binder shall be established in the mix design.

When RAP is used in base and intermediate courses, the amount of RAP aggregate and RAP binder should not exceed 30% contribution; Surface courses should be limited to 20% RAP aggregate and RAP binder contribution.

In addition to the requirements of Section 710.3.1, the job mix formula shall indicate the percent of asphalt RAP and the percent and performance grade of virgin (added) asphalt binder.

When less than or equal to 15% RAP binder is used by weight of total binder in the mix, the added virgin binder shall meet the requirements for PG 70-10 as shown in Section 711. When greater than 15% RAP is used by weight of the total binder in the mix, the added virgin binder will be dropped one grade for low and high temperature properties to a PG 64-16, unless testing indicates that the blend of the recovered RAP binder and virgin binder meets the requirements for PG 70-10 as shown in Section 711. The virgin asphalt binder shall not be more than one standard asphalt material grades different than the specified mix design binder grade.

710.2.4 Mineral Admixture: Mineral admixture when used as an anti-stripping agent in asphalt concrete shall conform to the requirements of AASHTO M-17. Mineral admixture used in asphalt concrete shall be dry hydrated lime, conforming to the requirements of ASTM C1097 or Portland cement conforming to ASTM C150 Type II or ASTM C595 Type IP. The amount

of hydrated lime or Portland cement used shall be determined by the mix design. The minimum mineral admixture content within a mix will be 1.00 percent, by weight of total aggregate.

710.3 MIX DESIGN REQUIREMENTS:

710.3.1 General: The mix design for asphalt concrete shall be prepared by a laboratory that is accredited through the AASHTO Accreditation Program (AAP) in Hot Mix Asphalt Aggregates and Hot Mix Asphalt. The laboratory shall be under the direct supervision of a Civil Engineer, registered by the State of Arizona, and who is listed by ADOT as a "Qualified Asphaltic Concrete Mix Design Engineer" within ADOT's latest list of approved laboratories. The latest list of approved laboratories is available on ADOT's web page www.azdot.gov. The date of the design shall not be older than two years from the date of submittal, unless supportive documentation is provided and approved by the Engineer.

The mix design report shall include the following elements as a minimum.

(1) The name and address of the testing organization and the person responsible for the mix design report.

(2) The mix plant identification and/or location, as well as the supplier or producer name.

(3) A description of all products that are incorporated in the asphalt concrete along with the sources of all products, including admixtures and asphalt binder, and their method of introduction.

(4) The supplier and grade of asphalt binder, the source and type of mineral aggregate, and the percentage of asphalt binder and mineral admixture used.

(5) The percentage of RAP and RAP Binder being contributed to the total mix shall be included in the mix design report.

(6) The mix design report shall state whether it is Gyratory or Marshall, and the size designation.

(7) The results of all testing, determinations, etc., such as: specific gravity and gradation of each component, water absorption, sand equivalent, loss on abrasion, fractured coarse aggregate particles, Tensile Strength Ratio (ASTM D4867), Marshall stability and flow, asphalt absorption, percent air voids, voids in mineral aggregate, and bulk density. Historical abrasion values may be supplied on existing sources. The submittal should include a plot of the gradation on the Federal Highway Administration's 0.45 Power Gradation Chart, plots of the compaction curves and the results of moisture sensitivity testing.

(8) The laboratory mixing and compaction temperature ranges for the supplier and grade of asphalt binder used within the mix design.

(9) A specific recommendation for design asphalt binder content and any limiting conditions that may be associated with the use of the design, such as minimum percentages of crushed or washed fine aggregate.

(10) The supplier's product code, the laboratory Engineer's seal (signed and dated), and the date the design was performed.

(11) If a Warm Mix Technology or additive is used, the following shall be included:

- Technology type and supporting manufacturer information; including instructions pertaining to laboratory mixture temperatures and curing.
- Amount (%) of additive (technology) used in the mixture.
- Attached copy of the ADOT approved product list, showing additive/technology
- Minimum plant production temperature shall not fall below manufacturer's recommendation.
- Minimum field compaction temperature shall be identified.
- Identify any special mixing or compaction temperatures or special methods to be used when conducting Quality Assurance or Quality Control testing of field collected samples. Example: if the field collected samples of warm mix asphalt can be treated as conventional hot asphalt mix, provide the equivalent conventional hot asphalt mix compaction temperature.

The mix design shall be submitted to the Agency or Engineer by the Contractor/Supplier for which it was developed as part of his project submittals. Once the mix design has been approved by the agency or Engineer, the Contractor and/or his supplier shall not change plants nor use additional mixing plants without prior approval of the Engineer. If a Contractor/Supplier elects to change the source of mineral admixture or binder, a volumetric check point may be completed in lieu of a new mix design. The checkpoint shall comply with the mix design volumetric parameters listed in Table 710-3 for Marshall mixes or Table 710-5 for Gyratory mixes. Any change shall be to an equal alternative material, and this shall not apply to changes in aggregate source. Any changes in the plant operation, the producer's pit, modifiers in the asphalt binder, or any other item that will cause an adjustment in the mix, shall be justification for a new mix design to be submitted.

710.3.2 Mix Design Criteria: The mix design shall be performed by one of two methods, Marshall Mix Design or Gyratory Mix Design. The method shall be specified on the plans, special provisions, or by the Engineer. A minimum of 4 points will be used to establish the mix design results. The oven aging period for both Marshall and Gyratory mix design samples shall be 2 hours.

710.3.2.1 Marshall Mix Design: The Marshall Mix Design shall be performed in accordance with the requirements of the latest edition of the Asphalt Institute's Manual, MS-2 "Mix Design Methods for Asphalt Concrete." The mix shall use the compactive effort of 75 blows per side of specimen. The mix shall comply with the criteria in Table 710-3.

TABLE 710-3
MARSHALL MIX DESIGN CRITERIA

Criteria	Requirements			
	3/8" Mix	1/2" Mix	3/4" Mix	Designated Test
1. Voids in Mineral Aggregate: %, min	15.0	14.0	13.0	AI MS-2
2. Effective Voids: %, Range	4.0±0.2	4.0 ±0.2	4.0 ±0.2	AI MS-2
3. Absorbed asphalt: %, Range*	0-1.0	0-1.0	0-1.0	AI MS-2
4. Dust to Eff. Asphalt Ratio, Range **	0.6-1.4	0.6-1.4	0.6-1.4	AI MS-2
5. Tensile Strength Ratio: % Min.	65	65	65	ASTM D4867
6. Dry Tensile Strength: psi, Min.	100	100	100	ASTM D4867
7. Stability: pounds, Minimum	2,000	2,500	2,500	AASHTO T-245
8. Flow: 0.01-inch, Range	8-16	8-16	8-16	AASHTO T-245
9. Mineral Aggregate Grading Limits				AASHTO T-27

		Percent Passing with Admix	
Sieve Size	3/8 inch Mix	1/2 inch Mix	3/4 inch Mix
1-1/4 inch	—	—	—
1 inch	—	—	100
3/4 inch	—	100	90 – 100
1/2 inch	100	85 – 100	—
3/8 inch	90-100	62 – 85	62 – 77
No. 8	45-60	40 – 50	35 – 47
No. 40	10-22	10 – 20	10 – 20
No. 200	2.0 – 10.0	2.0 – 10.0	2.0 – 8.0

* Unless otherwise approved by the Engineer.

** The ratio of the mix design composite gradation target for the No. 200 sieve, including admixture, to the effective asphalt content shall be within the indicated range.

710.3.2.2 Gyratory Mix Design: Gyratory Mix Designs shall be performed in accordance with the requirements of latest edition of the Asphalt Institute's SP-2 manual. Mix design laboratory compacted specimens shall be prepared using a gyratory compactor in accordance with AASHTO T-312.

The mix design shall be formulated in a manner described for volumetric mix designs in the current edition of the Asphalt Institute Manual SP-2, except the number of trial blend gradations necessary will be determined by the mix design laboratory. Duplicate gyratory samples shall be prepared at a minimum of four (4) binder contents to select the recommended binder content. The gyratory specimens shall be compacted to 160 gyrations. Volumetric data for the design number of gyrations, N_{des}, and the initial number of gyrations, N_{ini}, are then back calculated based on the bulk specific gravity, G_{mb}, of the N_{max} specimens and the height data generated during the compaction process of those same specimens.

TABLE 710-4	
Number of Gyrations	
N_{ini}	8
N_{des}	100
N_{max}	160

The corrected density of the specimens shall be less than 89.0 percent of maximum theoretical density at N_{ini}. The corrected density of the specimens shall be less than 98.0 percent of maximum theoretical density at N_{max}. The Gyratory mix shall comply with the criteria in Table 710-5.

TABLE 710-5				
GYRATORY MIX DESIGN CRITERIA				
Criteria	**Requirements**			**Designated Test**
	3/8" Mix	**1/2" Mix**	**3/4" Mix**	**Method**
1.Voids in Mineral Aggregate: %, Min.	15.0	14.0	13.0	AI SP-2
2.Effective Voids: %, Range	4.0 ± 0.2	4.0 ± 0.2	4.0 ± 0.2	AI SP-2
3.Absorbed Asphalt: %, Range *	0 - 1.0	0 - 1.0	0 - 1.0	AI SP-2
4.Dust to Eff. Asphalt Ratio, Range **	0.6 – 1.4	0.6 – 1.4	0.6 – 1.4	AI SP-2
5.Tensile Strength Ratio: %, Min.	75	75	75	ASTM D4867
6.Dry Tensile Strength: psi, Min.	75	75	75	ASTM D4867
7. Mineral Aggregate Grading Limits				AASHTO T-27
	Percent Passing with Admix			
Sieve Size	**3/8 inch Mix**	**1/2 inch Mix**	**3/4 inch Mix**	
1 inch	—	—	100	
3/4 inch	—	100	90-100	
1/2 inch	100	90-100	43-89	
3/8 inch	90-100	53-89	—	
No. 8	32-47	29-40	24-36	
No. 40	2-24	3-20	3-18	
No. 200	2.0-8.0	2.0-7.5	2.0-6.5	

* Unless otherwise approved by the Engineer.

** The ratio of the mix design composite gradation target for the No. 200 sieve, including admixture, to the effective asphalt content shall be within the indicated range.

710.3.2.3 Moisture Sensitivity Testing: Moisture sensitivity testing will be performed in accordance with ASTM D4867 for both Marshall and Gyratory mix designs, without the freeze/thaw cycles. The minimum required Tensile Strength Ratio is indicated in the tables above.

- ***End of Section -***

SECTION 711

PAVING ASPHALT

711.1 GENERAL:

The asphalt shall be produced from crude asphalt petroleum or a mixture of refined liquid asphalt and refined solid asphalt. It shall be free from admixture with any residues obtained by the artificial distillation of coal, coal tar, or paraffin oil and shall be homogeneous and free from water.

Polymer modified asphalt cement shall be produced from crude asphalt petroleum and a polymer or blend of polymers mixed to produce a homogeneous material free from water.

Asphalt shall not be heated during the process of its manufacture, storage, or during construction so as to cause injury as evidence by the formation of carbonized particles.

711.2 TESTING REQUIREMENTS:

Paving asphalt shall be classified by the Performance Grading System and shall conform to the requirements set forth in Table 711-1 and AASHTO M-320 with the PAV temperature changes noted in the table. On all grades, flash point temperature AASHTO T-48: minimum 230 °C and mass loss, maximum 1.00 percent.

TABLE 711-1
PERFORMANCE GRADING SYSTEM

	PG 58-22	PG 64-16	PG 70-10	PG 76-16
Original Asphalt				
Viscosity, AASHTO T-316 (Note 1) Max. 3 Pa-s, Test Temp, °C	135	135	135	135
Dynamic Shear AASHTO T-315 (Note 2) G*/Sin δ, Min., 1.0 kPa Test Temp. @ 10 rad/s, °C	58	64	70	76
Tests Using Rolling Thin Film Oven Residue (AASHTO T-240)				
Mass Loss, Maximum %	1.0	1.0	1.0	1.0
Dynamic Shear AASHTO T-315 G*/Sin δ, Min., 2.20 kPa Test Temp. @ 10 rad/s, °C	58	64	70	76
Tests Using Pressure Aging Vessel Residue (AASHTO R-28)				
PAV Aging Temperature, °C (AASHTO R-28)	100	100	110	110
Dynamic Shear AASHTO T-315 G*·Sin δ, Max., 5000 kPa Test Temp. @ 10 rad/s, °C	22	28	34	34
Creep Stiffness, AASHTO T-313 (Note 3) S, Maximum, 300.0 Mpa *m*-value, Minimum, 0.300 Test Temp. @ 60s, °C	-12	-6	0	-6
Direct Tension, AASHTO T-314 (Note 3) Failure Strain, Minimum 1.0% Test Temp. @ 1.0 mm/min. °C	-12	-6	0	-6

NOTES:
(1) This requirement may be waived at the discretion of the specifying agency if the supplier warrants that the asphalt binder can be adequately pumped and mixed at temperatures that meet all applicable safety standards.

(2) For quality control of unmodified asphalt cement production, measurement of the viscosity of the original asphalt cement may be substituted for dynamic shear measurements of G*/sin (d) at test temperatures when the asphalt is a Newtonian fluid. Any suitable standard means of viscosity measurement may be used, including capillary or rotational viscometer (AASHTO T-210 or AASHTO T-202).

(3) If the creep stiffness is below 300 MPa, the direct tension test is not required. If the creep stiffness is between 300 and 600 MPa, the direct tension failure strain requirement can be used in lieu of the creep stiffness requirement. Direct tension test is recommended for polymer modified asphalt binders. The m-value requirement must be satisfied in all cases.

Polymer modified paving asphalt shall be classified by the Performance Grading System and shall conform to the requirements set forth in Table 711-2 and AASHTO M-320 with the PAV temperature changes noted in the table. On all Grades Flash Point Temperature AASHTO T-48: Minimum 230 °C and Mass Loss, Maximum 1.00 percent. P is for Polymer and TR is for Tire Rubber.

TABLE 711-2
PERFORMANCE GRADING SYSTEM

	PG 64-28P	PG-76-22P	PG76-22TR Type 1 (Note 4)	PG76-22TR Type 2 (Note 4)
Viscosity, AASHTO T-316 (Note 1) Max. 3 Pa-s, Test Temp, °C	135	135	135	135
Dynamic Shear, AASHTO T-315 (Note 2) G*/Sin δ, Min., 1.0 kPa Test Temp. @ 10 rad/s, °C	64	76	76	76
Elastic recovery, ASTM D6084 Procedure "B" @ 10°C	65	65	65	55
Phase Angle, Max	75	75	75	75
Separation test, Texas 540 % Max	4	4	4	4
Solubility in Trichloroethylene, ASTM D2042 or n-propyl bromide, ASTM D7553 % Minimum	—	—	97.5	—
Tests Using Rolling Thin Film Oven Residue (AASHTO T-240)				
Mass Loss, Maximum %	1.0	1.0	1.0	1.0
Dynamic Shear, AASHTO T-315 G*/sin δ, Min., 2.20 kPa Test Temp. @ 10 rad/s, °C	64	76	76	76
Tests Using Pressure Aging Vessel Residue (AASHTO R-28)				
PAV Aging Temperature, °C (AASHTO R-28)	100	110	110	110
Dynamic Shear, AASHTO T-315 G*sin δ, Max., 5000 kPa Test Temp. @ 10 rad/s, °C	22	31	31	31
Mass Loss, AASHTO T-240 Weight % Max	1.0	1.0	1.0	1.0
Creep Stiffness, AASHTO T-313 S, Maximum, 300 Mpa *m*-value, Minimum, 0.300 Test Temp. @ 60s, °C	-18	-12	-12	-12
Direct Tension, AASHTO T-314 (Note 3) Failure Strain, Minimum 1.0% Test Temp. @ 1.0 mm/min. °C	-18	-12	-12	-12

NOTES: *(Continued on next page.)*

(1) This requirement may be waived at the discretion of the specifying agency if the supplier warrants that the asphalt binder can be adequately pumped and mixed at temperatures that meet all applicable safety standards.

(2) For quality control of unmodified asphalt cement production, measurement of the viscosity of the original asphalt cement may be substituted for dynamic shear measurements of G*/Sin δ, at test temperatures when the asphalt is a Newtonian fluid. Any suitable standard means of viscosity measurement may be used, including capillary or rotational viscometer (AASHTO T-210 or AASHTO T-202).

(3) If the creep stiffness is below 300 MPa, the direct tension test is not required. If the creep stiffness is between 300 and 600 MPa, the direct tension failure strain requirement can be used in lieu of the creep stiffness requirement. Direct tension test is recommended for polymer modified asphalt binders. The m-value requirement must be satisfied in all cases.

(4) "TR" binders shall have 9% to 11% reclaimed tire rubber and enough virgin polymer to meet all performance grade criteria specified. The blend percentages shall be listed on the Certificate of Compliance by the manufacturer. Type 1 shall meet solubility limits.

711.3 TEST REPORT AND CERTIFICATION:

Test reports and certifications shall be provided to the Engineer when requested by the Engineer. At the time of delivery of each shipment of asphalt, the supplier supplying the material shall deliver to the purchaser a certified copy of the test report which shall indicate the name of the refinery and supplier, type and grade of asphalt delivered, date and point of delivery, quantity delivered, delivery ticket number, purchase order number, and results of the above specified tests. The test report shall be signed by an authorized representative of the supplier certifying that the product delivered conforms to the specifications for the type and grade indicated.

Until the certified test reports and samples of the material have been checked by the Engineer, that material will be only tentatively accepted by the Contracting Agency. Final acceptance will be dependent upon the determination of the Engineer that the material involved fulfills the requirements prescribed. The certified test reports and the testing required in connection with the reports shall be at no additional cost to the Contracting Agency.

711.4 TEMPERATURES:

Paving asphalt shall be heated in such a manner that steam or hot oils will not be introduced directly into the paving asphalt during heating.

711.5 CONVERSION OF QUANTITIES:

When pay quantities of paving asphalt are determined from volumetric measurements, the volumetric measurement at any temperature shall be reduced to the volume the material would occupy at 60 degrees F. in accordance with ASTM D1250. In converting volume to weight, the computations shall be based on Table 711-3.

TABLE 711-3
ASPHALT CEMENT QUANTITY CONVERSION

Grade of Material	Gals. Per Ton of 60 °F.	Lbs. Per Gal at 60 °F.
PG 58-22	236	8.47
PG 64-16	235	8.51
PG 70-10	235	8.51
PG 64-28P	236	8.47
PG 76-22P, TR	236	8.47
PG 76-16	233	8.58

- End of Section -

SECTION 725

PORTLAND CEMENT CONCRETE

725.1 GENERAL:

Portland cement concrete shall be composed of cementitious materials, fine and coarse aggregates, water, and, if specified or allowed, certain chemical admixtures and additives.

TABLE 725-1
CONCRETE CLASSES - MINIMUM REQUIREMENTS

Class of Concrete	Minimum Cementitious Materials Content (lbs. per cubic yard)	Minimum Compressive Strength * at 28 Days (psi)
AA	600	4000
A	520	3000
B	470	2500
C	420	2000
* In accordance with Section 725.8		

725.2 CEMENTITIOUS MATERIALS:

Hydraulic cement shall consist of either Portland cement or Blended Hydraulic cement.

Portland cement shall conform to the current revision requirements of ASTM C150 for Type II for moderate sulfate resistance, Type III for high early strength, or Type V for high sulfate resistance, and shall not contain more than 0.60 percent total equivalent alkalis.

Blended hydraulic cement shall conform to the current revision requirements of ASTM C595 for Portland Pozzolan cement Type IP (MS) for moderate sulfate resistance or (HS) for high sulfate resistance, Portland Limestone cement Type IL (MS) for moderate sulfate resistance or (HS) for high sulfate resistance, or Ternary Blended cement Type IT (MS) for moderate sulfate resistance or (HS) for high sulfate resistance.

Up to 25 percent by weight of the Table 725-1 minimum cementitious materials requirements may be an approved coal ash or natural pozzolan when the mix design incorporates C150 Portland cement of any Type or C595 Type IL Blended Limestone cement per Table 725-2. Additional coal ash or pozzolanic material in excess of the minimum Table 725-1 requirements may be incorporated into any concrete mix design to achieve enhanced performance, upon approval of the Engineer.

Supplementary Cementitious Materials (SCM) shall not be used as an additional cementitious materials replacement in concrete in combination with Portland Pozzolan cement Type IP or Ternary Blended cement Type IT without prior approval by the Engineer.

TABLE 725-2

Cement Type ASTM C150/C595	**Allowable Coal Ash or Natural Pozzolan (%)**	**Included Coal Ash or Natural Pozzolan (%)**	**Allowable Limestone (%)**
Type II	</= 25	—	</= 5
Type III	</= 25	—	</= 5
Type V	</= 25	—	</= 5
Type IL(X)[A]	</= 25	—	> 5 and </= 15
Type IP(X)[B]	—	</= 25	—
Type IT(PX)(LX)[C]	—	</= 25	</= 15

Notes: *(See following page.)*

A) Type IL - Portland cement blended or interground with limestone.
(X) - the targeted percentage of limestone in the product expressed as a whole number by mass of the final blended product.
B) Type IP - Portland cement blended or interground with coal ash or natural pozzolan.
(X) - the targeted percentage of coal ash or natural pozzolan in the product expressed as a whole number by mass of the final blended product.
C) Type IT - Portland cement blended or interground with coal ash or natural pozzolan and limestone.
(PX) - where P stands for coal ash or natural pozzolan and X is the targeted percentage expressed as a whole number by mass of the final blended product.
(LX) - where L stands for limestone and X is the targeted percentage expressed as a whole number by mass of the final blended product.

Cementitious materials shall be stored in such manner as to permit ready access for the purpose of inspection and identification, and so as to be suitably protected against damage by contamination or moisture. Should any lot of bulk cementitious material be delivered to the site show evidence of contamination, the Engineer may require that such lot be removed from the site.

725.2.1 Supplementary Cementitious Materials (Pozzolans): Supplementary Cementitious Materials to be used in concrete or furnished under this specification shall conform to the appropriate ASTM requirements as follows:

Coal ash (such as fly ash or bottom ash) or natural pozzolan (raw or calcined)	ASTM C618 and C311
Silica Fume	ASTM C1240

Upon request, the Contractor shall obtain and deliver to the Engineer a Certification of Analysis or Certification of Compliance signed by the pozzolan supplier identifying the pozzolanic material and stating the pozzolan delivered to the batching site complies with the appropriate specifications. The cost of furnishing tested pozzolan shall be considered as included in the contract price and no additional allowance will be made therefore.

Pozzolanic materials shall be handled and stored in the same manner as other cementitious materials. When facilities for handling a bulk pozzolan are not available, the pozzolan shall be delivered in original unopened sacks bearing the name and brand of the supplier, the type and source of the pozzolan, and the weight contained in each sack plainly marked thereon.

725.3 AGGREGATES:

Coarse and fine aggregate shall conform to the applicable requirements of ASTM C33. Coarse aggregate grading requirements shall conform to the appropriate rock size designation in the Grading Requirements for Coarse Aggregate, Table 3. Fine aggregate grading requirements shall conform to Section 6, Table 1.

The average value of three successive sand equivalent samples shall not be less than 70 when tested in accordance with ASTM D2419. No individual sample shall have a sand equivalent less than 65.

The loss by abrasion in the Los Angeles Abrasion Machine, determined as prescribed in ASTM C131, shall not exceed 10 percent, by weight, after 100 revolutions nor 40 percent after 500 revolutions.

Prior to the delivery of the aggregates and whenever required during concrete production, the Contractor shall make stockpiles available to the Engineer for testing. All required samples shall be furnished at the expense of the Contractor, and the cost of sampling and testing shall be at the expense of the Contracting Agency.

Reclaimed Concrete Materials (RCM) and Reclaimed Asphalt Pavement (RAP) as defined in Section 701 shall not be used in Portland Cement Concrete without the prior approval of the Engineer.

725.4 WATER:

The water used for mixing concrete shall be potable or shall meet the requirements of ASTM C1602, when tested by a qualified independent testing laboratory.

SECTION 725

725.5 ADMIXTURES AND ADDITIVES:

Admixtures or additives of any type, except as otherwise specified, shall not be used unless identified in the approved mix design or authorized by the Engineer.

Water reducing admixtures incorporated into the approved concrete mix design shall meet the requirements of ASTM C494 for the appropriate type.

Air entraining admixtures incorporated into the approved concrete mix design shall meet the requirements of ASTM C260.

Pigments incorporated into the approved concrete mix design for integrally colored concrete shall meet the requirements of ASTM C979.

Fibers incorporated into the approved concrete mix shall meet the requirements of ASTM C1116.

Any admixtures used shall be included in the price for that item.

725.6 MIX DESIGN PROPORTIONING:

A concrete mix design carrying the producer's designated mix number for each type of concrete being furnished under these specifications shall be submitted to the Engineer every two years for approval. Each design shall utilize the proper proportioning of ingredients to produce a concrete mix that is homogeneous and sufficiently workable to provide a consistent and durable concrete product that meets the specified compressive strength and other properties as required by the application.

A concrete mix design submittal shall include the mix identification number and the applicable proportions, weights, and quantities of individual materials incorporated into the mix including the size and source of concrete aggregates, the type and source of cement and coal ash or SCM, and the brand and designation of chemical admixtures or other additives.

In the event there is a modification to the mix design proportions:

(A) Modifications that do not require a new mix design submittal/approval:

(1) Modifications, which do not result in batch, target weights for the fine aggregate or combined coarse aggregates changing by more than 5 percent from the original approved mix design.
(2) Modifications to the percentage of coarse aggregate fractions that do not change the total coarse aggregate volume.
(3) Modifications to dosages of chemical or air-entraining admixtures, within the manufacturer's recommendations.
(4) The incorporation or elimination of chemical admixtures, which are listed on the mix design to effect a change in the time-of-set (retarders or accelerators).

(B) Modifications that require a new mix design submittal/approval and may require performance verification:

(1) Modification to the class of concrete per Table 725-1.
(2) Modification to the type/class/source of cement, coal ash, natural pozzolan, or silica fume.
(3) Modification to the percentage of coal ash, natural pozzolan, or silica fume.
(4) Modification to a coarse aggregate size designation.
(5) Modification of the type of chemical admixture, or the incorporation or elimination, of an air-entraining admixture.
(6) Modification of coarse or fine aggregate source.

725.7 MIXING:

All proportioning/batching/mixing equipment shall comply with the standards of the Concrete Plant Manufacturer's Bureau and the certification requirements of the Arizona Rock Products Association or National Ready Mixed Concrete Association. The proportioning shall consist of combining the specified sizes of aggregates with cementitious materials, admixtures/additives, and water as herein provided. No method which may cause the segregation or degradation of materials, shall be used.

Weighing and metering devices used for the purpose of proportioning materials shall fulfill requirements as to accuracy and tolerance prescribed by the Weights and Measures Division of the State of Arizona and shall be sealed and certified in accordance with the procedures established by this agency. This certification shall not be over 12 months old and shall be renewed whenever required by the Engineer. When portable plants are set up at a new or temporary location, the scales and scale assembly shall be inspected and certificate issued regardless of the date when the scales were last tested. The Engineer may require the Contractor to run a quick scale check at any time with certified weights furnished by the Contractor and order the scale recertified if necessary.

Any admixture/additive shall be measured accurately by mechanical means into each batch by equipment or in a method pre-approved by the Engineer.

The equipment for measuring and supplying the water in the mixer shall be so constructed and arranged that the amount of water to be added to the mixture can be measured, in gallons or by weight. The amount of water shall be varied in accordance with the percentage of free moisture in the material and the requirements of the workability of the aggregate. Machine mixing will be required in all cases unless pre-approved by the Engineer. Regardless of the method employed, mixing shall be commenced as soon as possible after the cementitious material is placed in contact with the aggregates or water. All concrete mixers shall be of such design and construction, and so operated, as to provide a thoroughly and properly mixed concrete in which the ingredients are uniformly distributed.

725.7.1 Paving and Stationary Mixers: Paving and stationary mixers shall comply with the standards of the Concrete Plant Manufacturer's Bureau and the certification requirements of the Arizona Rock Products Association or the National Ready Mixed Concrete Association. Mixers shall be maintained in proper and serviceable working condition, and any part or portion thereof that is out of order, or becomes worn to such extent as to detrimentally affect the quality of mixing, shall be promptly repaired or replaced.

The proper proportions of aggregate, cementitious materials, admixtures/additives and water for each batch of concrete shall be placed in the mixer, and shall be mixed for a period of not less than 50 seconds after all such materials are in the drum.

The rotating speed at which the mixer shall be operated shall conform to that recommended by the manufacturer.

The total volume of materials mixed in any one batch shall neither exceed the water level capacity of the mixer nor the manufacturer's catalog rated capacity of the mixer.

725.7.2 Transit Mixers: Transit mixers shall meet the requirements of the Truck Mixer Manufacturer's Bureau and the certification requirements of the Arizona Rock Products Association or the National Ready Mixed Concrete Association. Ready mix concrete shall comply with ASTM C94 except as herein specified.

Each mixer and agitator shall have attached thereto in a prominent place a metal plate or plates, installed by the manufacturer, on which is plainly marked the capacity of the drum in terms of the volume of mixed concrete and the speed of rotation for the agitating and mixing speeds of the mixing drum or blades.

Each mixer shall have an identification number painted on the truck in such a location that it can be easily read from the batching platform.

The total volume of materials introduced into the mixer for mixing purposes shall not exceed the manufacturer's guaranteed mixing capacity. If the concrete so mixed does not meet the uniformity requirements of this section, the amount of materials charged into the mixer shall be reduced.

The rotation speed at which the mixer shall be operated shall conform to that recommended by the manufacturer.

Each batch of concrete placed in the mixer shall be mixed for not less than 70 nor more than 100 revolutions of the drum or blades, at the speed designated by the manufacturer of the equipment as mixing speed. Additional mixing shall be at the agitating speed designated by the manufacturer of the equipment. The revolving of the drum shall be continuous until the concrete is completely emptied from the drum. Before any portion of the materials for any batch of concrete is placed therein, the drum of the mixer shall be completely emptied of the previously mixed batch.

At the time of delivery to the job site, the Engineer shall be provided with a legible delivery ticket that shall contain the following information:

- Date and Truck Number.
- Name of the Supplier.
- Name of the Contractor.
- Specific designation of job (name and location).
- Number of cubic yards in the batch.
- Time the transit mixer is loaded.
- Amount of water added at the job site at request of receiver, and his signature or initials.
- Suppliers' mix design code number.
- Type and amount of admixture or additive that is not already included in the approved mix design, if any.
- Serial number of the ticket.

Additional water may be added on the jobsite in accordance with ASTM C94 Tolerances in Slump section to adjust slump providing the slump after such water addition does not exceed the maximum allowed by these specifications in Section 725.9

(A) (1) and that water so added is mixed into the batch for a minimum of 30 additional revolutions at mixing speed. Loss of cement mortar during discharge, which in the opinion of the Engineer would be of sufficient amount to affect the homogeneity of the concrete, shall be cause for rejection of the load. The Contractor shall be responsible for all concrete to which water is added at the job site.

725.7.3 Job Mixed Concrete: All job mixed materials and procedures shall be pre-approved by the Engineer. A prepackaged commercial product shall be used for job mixed concrete placement in accordance with the manufacturer's recommended procedure.

In lieu of the use of a prepackaged commercial product, individual ingredients for concrete placement shall be prepared in a watertight container of suitable volume in batches not to exceed 1/3 cubic yard each. Proportioning of batches shall be in accordance with the applicable required mix design in Table 725-1 and Section 725.6. All mixing shall be done prior to placement in the forms and in accordance with the following procedure:

(A) Mixing shall be done in a mechanical batch mixer of approved type.
(B) The mixer shall be rotated at a speed recommended by the manufacturer.
(C) Mixing shall continue for at least 1-1/2 minutes after all materials are in the mixer, unless a shorter time is shown to be satisfactory by the mixing uniformity tests of ASTM C94.
(D) Materials handling, batching, and mixing shall conform to the applicable provisions of ASTM C94.
(E) Suitable records shall be kept to identify the number of batches, proportions of materials used, and time and date of mixing and placement along with the approximate location in the structure.

725.7.4 Dry Batched Unmixed Concrete: All dry batched unmixed concrete materials and procedures shall be pre-approved by the Engineer. An accurate batch weight shall be provided to record the quantities of cementitious materials, aggregate, admixtures/additives, and water batched into the containers. The date of batching, the container number and the batching certificate number shall be recorded at the time of batching. Copies of the batch weight records shall be submitted to the Engineer upon request.

All dry batched unmixed concrete delivered to the job site shall be stored in containers so constructed that the cement cannot comingle with the water and aggregate within the container. Any admixture/additive added in powder form shall be added to the cement; if added in liquid form, it shall be added to the water.

The contents of the container shall be discharged into a mixer at the job site. Following discharge of the first container into the mixer, the mixer shall be operated at mixing speeds during the discharge of the remaining containers. After the contents of the last container have been discharged into the mixer, the concrete shall be mixed as specified in this specification for transit mixers, and drum or turbine type mixers.

Any spillage of cementitious materials, aggregate, water or admixtures/additives during the filling, transporting, or the

discharging of the container, shall be cause for rejection of the container or the contents of the mixer if any portion of the rejected container is discharged into the mixer.

725.7.5 Volumetric Batching and Continuous Mixing Concrete and Equipment: Volumetric-batching and continuous-mixing concrete and equipment may be utilized upon approval of the Engineer for job site concreting applications. Material handling, procedures, and operations shall be in accordance with ACI 304.6R, Guide for the use of Volumetric-Measuring and Continuous-Mixing Concrete Equipment and all concrete produced and all test performed shall be in accordance with ASTM C685, Standard Specification for Concrete Made by Volumetric Batching and Continuous Mixing. All equipment shall meet the requirements of the Volumetric Mixer Standards of the Volumetric Mixer Manufacturers Bureau and shall have a suitable copyrighted rating plate furnished by the Bureau and attached to the volumetric mixing equipment.

725.8 TESTS AND TEST METHODS:

725.8.1 Field Sampling and Tests: Concrete shall be sampled in accordance with ASTM C172 for determination of temperature, slump, unit weight and yield (when required) and air content (when required) as well as for fabrication of test cylinders for compressive strength determination at 28 days. Samples shall be of sufficient size to perform all the required tests and fabricate the necessary test cylinders but in no case less than 1 cubic foot. Concrete shall be sampled during discharge of the middle portion of the batch. At the discretion of the Engineer, a sample may be obtained at the beginning of the discharge if the properties of the concrete do not appear to be within the specification limits for slump or temperature.

All sampling and testing shall be done by a certified technician meeting the requirements of the ACI Concrete Field Testing Technician, Grade I or equivalent.

Temperature of the concrete mixture shall be determined in accordance with ASTM C1064.

Slump of the concrete mixture shall be determined in accordance with ASTM C143.

Air content of the concrete mixture (when required) shall be determined in accordance with ASTM C231 or C173, whichever is applicable.

Unit weight and yield of the concrete mixture (when required) shall be determined in accordance with ASTM C138.

All compressive strength test specimens shall be made, cured, handled, protected, and transported in accordance with the requirements of ASTM C31. The contractor shall provide and maintain for the sole use of the testing laboratory/technician adequate facilities for safe storage and proper curing of concrete test cylinders on the project site including sufficient access on weekends and holidays to allow the timely pick-up of cylinders specimens. Any and all deviations from the standard procedure of any test method shall be promptly identified and corrected. Any deviations shall be clearly noted by the testing laboratory on all written reports. Testing results obtained from non-standard testing procedures shall be considered invalid and discarded by Engineer.

Sampling and testing performed for concrete acceptance will be at the expense of the Contracting Agency. Sampling and testing for the Contractor's purposes of quality control or other needs shall be at the Contractor's expense.

725.8.2 Concrete Cylinder Test: A cylinder strength test shall be the average of the strengths of at least two 6 inch by 12 inch cylinders or at least two 4 inch by 8 inch cylinders made from the same sample of concrete and tested at 28 days. An adequate number of cylinder specimens shall be made for each 50 cubic yards or not less than each half-day's placement of each class of concrete. All specimens will be tested in a laboratory approved by the Engineer in accordance with ASTM C39 for concrete acceptance. Should an individual cylinder show evidence of improper sampling, molding, curing, or testing, the results shall be discarded and the compressive strength shall be the result of the average of the remaining cylinder(s). Additional cylinder specimens may be made and tested at other ages to obtain additional compressive strength information and shall not be considered as acceptance tests. Cylinder testing performed for concrete acceptance will be at the expense of the Contracting Agency. Cylinder testing for the Contractor's purposes of quality control or other needs shall be at the Contractor's expense.

725.8.3 Additional Concrete Testing: If the 28-day strength test does not meet the compressive strength requirements, additional concrete testing may be performed to further evaluate the concrete in question for purposes of acceptability or

payment. This may involve testing of additional cylinders at later ages, (for example - hold cylinders at 56 days or more), or core testing to determine in-place concrete strengths. This additional testing and all coring repairs shall be pre-approved by the Engineer and at the expense of the Contractor. If core testing is performed, at least three representative cores shall be obtained, conditioned and tested in accordance with ASTM C42 from each concrete member or area of concrete to be tested at locations designated by the Engineer. Cores damaged subsequent to or during removal shall be rejected and additional core samples taken. Cores shall be obtained and delivered to a laboratory acceptable to the Engineer in time to allow complete strength testing within 48 days of original concrete placement. The Contractor may elect to have a representative present during sampling and testing. A core strength test shall be the average of the results of the three cores. Should an individual core show evidence of improper sampling, curing, or testing, the results shall be discarded and the compressive strength shall be the result of the average of the remaining core(s). Results of the core strength testing shall replace the results of the cylinder strength test for that sample.

725.9 ACCEPTANCE:

(A) Plastic Concrete Properties:

(1) The slump of the concrete shall meet the requirements of ASTM C94 Tolerances in Slump section. When the approved mix design or project specification requirements for slump are a "maximum" or "not to exceed", the following tolerances apply:

Specified slump:	If 3" or less	If more than 3"
Plus tolerance	0 inch	0 inch
Minus tolerance	1 1/2 inch	2 1/2 inch

When the approved mix design or project specification requirements for slump are not written as a "maximum" or "not to exceed," the following tolerances apply:

For design slump of:	Tolerance
2 inch and less	+/- 1/2 inch
More than 2 through 4 inch	+/- 1 inch
More than 4 inch	+/- 1 1/2 inch

(2) Limit the maximum allowable temperature of the concrete mixture immediately before placement to 95°F unless otherwise specified or unless a higher allowable temperature is pre-approved by the Engineer. At the discretion of the Engineer, recommended practices in ACI 305, Specification for Hot Weather Concreting, can provide good reference information and may be used to modify maximum allowable concrete temperature and acceptance.

Per ACI 306, Specification for Cold Weather Concreting, when the atmospheric temperature at the time of placing concrete is above 30°F the temperature of the concrete, as placed, shall not be less than 60°F. When the atmospheric temperature at the time of placing concrete is between 0°F and 30°F the temperature of the concrete, as placed, shall not be less than 65°F.

(3) Air entrained concrete shall meet the requirements of ASTM C94 Air-Entrained Concrete section. The air content of air-entrained concrete when sampled from the transportation unit at the point of discharge shall be within the approved mix design tolerance or +/- 1.5 % of the specified value. When a representative sample taken prior to discharge shows an air content below the specified level by more than the allowable tolerance, additional air entraining admixture shall be added to the concrete mix to achieve the desired air content level, followed by a minimum of 30 revolutions at mixing speed.

(4) Per ASTM C94 Mixing and Delivery section, discharge of the concrete shall be completed within 1 1/2 hours (90 minutes) after the introduction of the mixing water to the cementitious materials or the introduction of the cementitious materials to the aggregates. The Engineer may allow the continuation of concrete placement after the 1 1/2 hours (90 minutes) time limit has been reached if the concrete is of such slump or workability that it can be placed without the addition of water to the batch. The 1 1/2 hours (90 minutes) time limit may also be waived if the mix design incorporates a hydration stabilizing admixture at the sufficient dosage to slow down hydration in order to permit additional transit/placement time. The dosage and associated additional time shall be noted on the delivery ticket. The additional

discharge time shall not exceed the maximum additional time based on the dosage noted on the approved mix design or delivery ticket. It is the Contractor's responsibility to obtain approval for additional discharge time from the Engineer prior to concrete placement.

Any concrete failing to meet the tolerances for plastic concrete properties in 725.9 (A) (1) through (4) shall be reviewed by the Engineer and is subject to rejection.

(B) Hardened Concrete Properties – Compressive Strength:

Compressive strength of concrete shall be determined on the basis of cylinder strength tests obtained in accordance with Section 725.8.2 and shall be acceptable if the tests meet or exceed the minimum specified strength. When the validity of cylinder strength tests are suspect, the strength of concrete in question shall be determined in accordance with Section 725.8.3.

When compressive strength test results are less than the specified minimum, an Engineering Analysis to determine the impact of the strength reduction may be required by the Engineer prior to the decision to accept or reject the concrete. The Engineering Analysis will be at the Contractor's expense. Any concrete that is rejected by the Engineer shall be removed and replaced by the Contractor at the Contractor's expense.

When concrete is accepted by the Engineer on the basis of test results of less than 100% of the required minimum compressive strength, an adjustment in the concrete unit price may be made for the quantity of concrete represented by such strength tests in accordance with Table 725-3.

TABLE 725-3

Adjustment in Concrete Unit Price Based on Strength Deficiency

Class AA and Class A		Class B and Class C	
Percent of Specified Minimum 28-day Compressive Strength Attained (Nearest 1%)	Percent of Concrete Unit Price Allowed	Percent of Specified Minimum 28-day Compressive Strength Attained (Nearest 1%)	Percent of Concrete Unit Price Allowed
100% or greater	100	100% or greater	100
98-99	90	95-99	95
96-97	85	90-94	90
95	80	85-89	85

- End of Section -

SECTION 726

CONCRETE CURING MATERIALS

726.1 GENERAL:

Curing materials shall consist of curing paper, polyethylene film or liquid membrane-forming compounds which, when applied to fresh concrete, will inhibit moisture loss and reduce temperature rise during the curing period. All curing materials and methods shall be approved by the Engineer prior to use. Wet coverings such as burlap, cotton mats, or other moisture-retaining fabrics also may be used, or may be required by special provisions.

726.2 MATERIALS:

(A) Curing paper, or polyethylene film, shall conform ASTM C171.

(B) Liquid membrane-forming compounds shall conform ASTM C309. Type 1 compound with either a Class A or Class B vehicle shall be used for concrete structures, except bridge decks, approach slabs, and Portland cement concrete pavement. Type 2 white pigmented compound, with either a Class A or Class B vehicle shall be used for Portland cement concrete pavement, bridge decks and approach slabs.

(C) Burlap cloth made from jute or kenaf shall conform to AASHTO M-182.

- ***End of Section*** -

SECTION 727

STEEL REINFORCEMENT

727.1 GENERAL:

The following specifications set forth the requirements for bar reinforcement, wire reinforcement, and wire mesh reinforcement. The reinforcement shall conform accurately to the dimensions and details indicated on the plans or otherwise prescribed and before being placed in any concrete work, shall be thoroughly cleaned of all loose rust, mill scale, mortar, oil, dirt, or coating of any character, which would be likely to destroy, reduce, or impair its proper binding with the concrete.

No reinforcing steel will be accepted under this specification until it has been approved by the Engineer. When required by the Engineer, the Contractor or supplier shall furnish a spot sample taken on the project and notify the Engineer as to when and where they will be available. Such samples shall be furnished at the expense of the Contractor or supplier, but the cost of any testing that may be required will be borne by the Contracting Agency. Samples shall only be taken in the presence of the Engineer. The Contractor shall furnish three certified mill test reports or a Certificate of Compliance for each heat or size of steel, which can be clearly identified with the lot. When such information has been furnished, placing of the steel will not be held up until results of spot samples have been received. Unless otherwise specified, all reinforcing steel bars shall be deformed intermediate grade 40 billet steel in conformance to ASTM A615.

In testing bar reinforcement, only the theoretical cross-sectional area will be used in all computations.

Reinforcing steel shall be furnished in the sizes, shapes, and lengths shown on the plans. Bending of steel shall conform to the requirements of Section 505.5.2.

The various grades of steel shall not be used interchangeably in structures.

727.2 WIRE REINFORCEMENT:

Wire reinforcement shall in all respects fulfill requirements prescribed in ASTM A1064.

727.3 WELDED WIRE REINFORCEMENT:

Welded wire reinforcement shall conform to ASTM A1064. The wire size number and the wire spacing will be specified in the special provisions or shown on the plans. The welded wire reinforcement shall be so constructed as to retain its original shape and form during necessary handling. The effective cross-sectional area of the metal shall be equal to that specified or indicated on the plans.

727.4 WIRE TIES:

Wire for ties shall be black, annealed, and not lighter than 16 gage.

- End of Section -

SECTION 729

EXPANSION JOINT FILLER

729.1 PREMOLDED JOINT FILLER:

Expansion joint filler materials shall consist of preformed strips of a durable resilient compound and comply with one of the following as specified by the Contracting Agency or as approved by the Engineer.

(a) ASTM D1751 – Performed Expansion Joint Filler for Concrete Paving and Structural Construction (Nonextruding and Resilient Bituminous Types)
(b) ASTM D8139 – Semi-Rigid, Closed-Cell Polypropylene Foam, Preformed Expansion Joint Fillers for Concrete Paving and Structural Construction
(c) ASTM D1752 – Preformed Sponge Rubber Cork and Recycled PVC Expansion Joint Fillers for Concrete Paving and Structural Construction
(d) ASTM D2628 – Preformed Polychloroprene Elastomeric Joint Seals for Concrete Pavements.

729.2 POUR TYPE JOINT FILLERS FOR PORTLAND CEMENT CONCRETE PAVING (PCCP):

Pour type joint fillers shall comply with ASTM D3406 or as approved by the Engineer. Joint sealant shall not contain any coal tar materials. The following requirement shall be added to paragraphs 7.1 of ASTM D3406: The minimum ambient temperature during application and ambient temperatures under various storage conditions shall be clearly marked on the container.

729.3 TEST REPORT AND SHIPMENT CERTIFICATE:

When requested by the Engineer, each shipment shall be accompanied by a Certificate of Compliance that the material complies with the above specifications.

- End of Section -

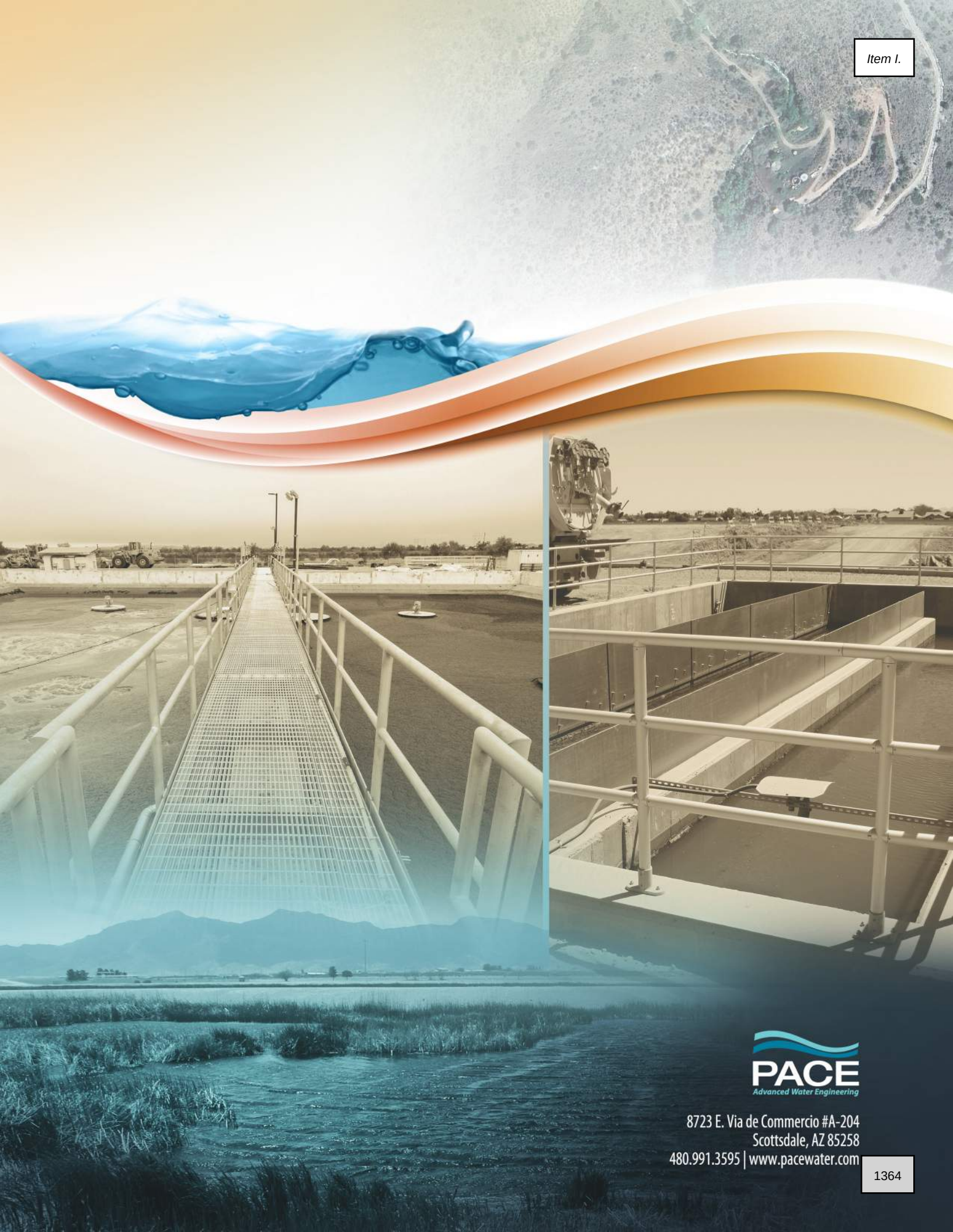

PACE
Advanced Water Engineering

8723 E. Via de Commercio #A-204
Scottsdale, AZ 85258
480.991.3595 | www.pacewater.com

TOWN OF JEROME

YAVAPAI COUNTY, ARIZONA

WASTEWATER TREATMENT PLANT

100% ISSUED FOR BID

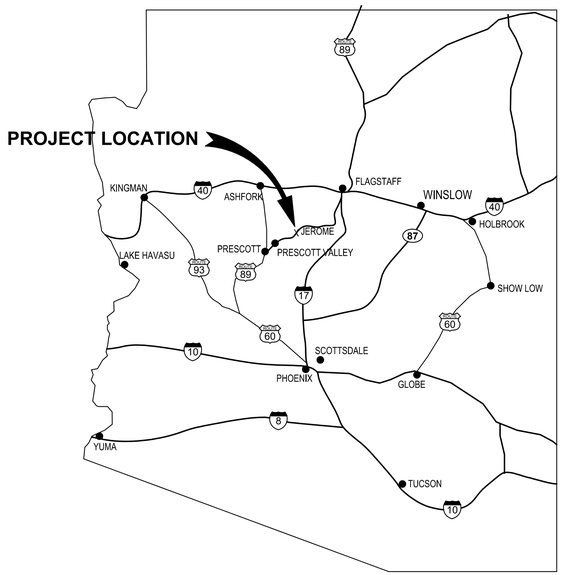

LOCATION MAP
N.T.S.

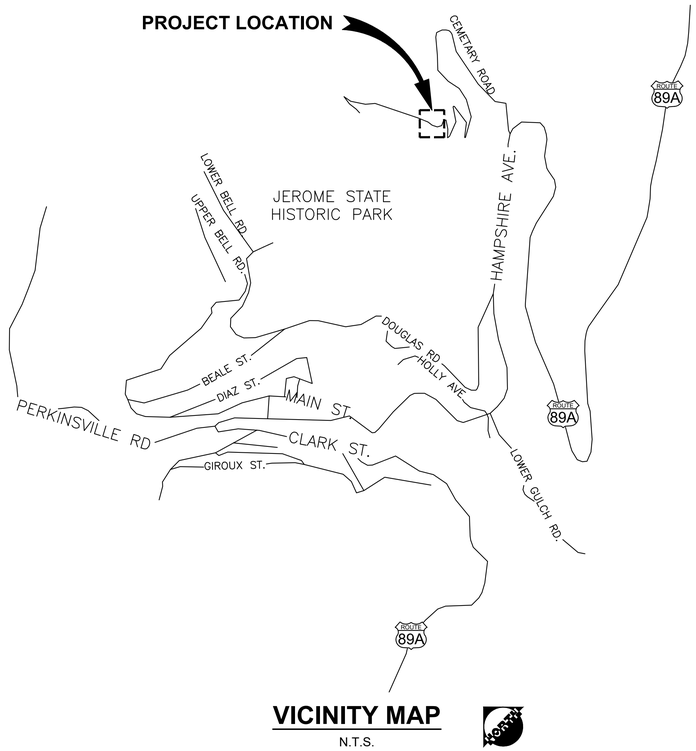

VICINITY MAP
N.T.S.

SURVEY DETAILS:

1. COORDINATES WERE VERIFIED IN THE FIELD USING REAL TIME KINEMATIC GPS OBSERVATIONS RELATIVE TO PUBLISHED CONTROL POINTS.
2. SURVEYED DURING THE MONTH OF DECEMBER 2022.
3. CONTRACTOR SHALL VERIFY HORIZONTAL AND VERTICAL CONTROLS IN THE FIELD PRIOR TO CONSTRUCTION.
4. PROJECT METADATA:
   - UNITS:
     COORDINATES, DISTANCE AND ELEVATIONS ARE SHOWN IN INTERNATIONAL FEET.
   - HORIZONTAL DATUM (BASIS OF BEARINGS):
     NAD83 (2011 Epoch) ARIZONA CENTRAL ZONE
   - VERTICAL DATUM:
     NAVD '88
   - PROJECT BENCHMARK:
     POINT NUMBER 1
     PRIMARY BENCHMARK DESCRIBED AS: SET 1/2" REBAR
     SET REBAR WITH OPUS PROCESSED SOLUTION:
     GRID NORTHING = 1365466.36
     GRID EASTING = 643466.42
     OPUS ELEVATION = 4827.11
5. THE COORDINATES PRESENTED ARE SHOWN TO THREE DECIMAL PLACES FOR CALCULATION PURPOSES AND ARE NOT REPRESENTATIVE OF THE PRECISION OF THE SURVEY MEASUREMENTS.
6. THIS NOT A PROPERTY BOUNDARY SURVEY.

PROJECT ADDRESS:

TOWN OF JEROME WASTEWATER TREATMENT PLANT
SEWER PLANT ROAD
JEROME, AZ 86331

PRINCIPAL OWNER:

TOWN OF JEROME
600 CLARK STREET, P.O. BOX 335
JEROME, AZ 86331

GEODETIC CONTROL:

PT	NORTHING	EASTING	ELEVATION
1	1365466.36	643466.42	4827.11
2	1365826.06	643587.50	4801.17
3	1365527.64	643545.12	4815.50
4	1364201.32	642110.19	4832.28
5	1364259.41	642191.45	4827.73
6	1365024.28	642592.65	4654.33

CONSULTANTS:

ENGINEER OF RECORD

PACIFIC ADVANCED CIVIL ENGINEERING (PACE)
8723 E. VIA de COMMERCIO, #A204
SCOTTSDALE, AZ 85258
BUSINESS LICENSE NO. 1006013
(480) 991-3595
CONTACT: TAYLOR PIERCE, P.E.
CONTACT: MIKE KREBS, P.E.

CIVIL ENGINEER
SEC ENGINEERING
825 COVE PARKWAY
COTTONWOOD, AZ 86326
(928) 282-7787
CONTACT: KRISHAN GINIGE

STRUCTURAL ENGINEER:
PK ASSOCIATES
6900 E. BELLEVIEW AVENUE, SUITE 200
GREENWOOD VILLAGE, CO 80111
(720) 799-1053
CONTACT: JAMES APPLEYARD

ELECTRICAL ENGINEER:
WRIGHT ENGINEERING
165 E. CHILTON DRIVE
CHANDLER, AZ 85225
(480) 497-5829
CONTACT: JACOB BIELEFELDT

FINAL DESIGN APPROVAL:

BY: Brett Kai DATE: 4/21/2026
TOWN MANAGER
THE TOWN APPROVES THESE PLANS FOR CONCEPT ONLY AND IS NOT LIABLE FOR ERRORS OR OMISSIONS

RECORD DRAWING:

THESE RECORD DRAWINGS HAVE BEEN PREPARED BASED ON INFORMATION PROVIDED BY THE CONSTRUCTION CONTRACTOR. THE ENGINEER HAS INSPECTED THE COMPLETED FACILITIES AND CERTIFIES THAT THEY ARE A SUBSTANTIALLY ACCURATE PRESENTATION OF THE LAYOUT AND CONDITION OF THE CONSTRUCTED PROJECT.

NAME _____(SEAL)
REGISTRATION NO. _____ DATE _____
REVD. BY: _____
FIELD ENGINEERING

100% ISSUED FOR BID

PREPARED BY: TAYLOR B. PIERCE R.C.E 70097 DATE

PACE
Advanced Water Engineering
8723 E. VIA de COMMERCIO, SUITE A, SCOTTSDALE, CA 85258
P. (480) 991-3595 | www.pacewater.com

NO	BY	DATE	REVISIONS	DATE	APP.

Registered Professional Engineer (Civil)
CERTIFICATE NO. 70097
Taylor B. Pierce
Signed
ARIZONA, U.S.A.
Expires 12/31/28

THESE DRAWINGS ARE THE PROPERTY OF P.A.C.E. AND SHALL NOT BE REPRODUCED IN ANY MANNER NOR BE USED FOR CONSTRUCTION UNLESS STAMPED 'ISSUED FOR CONSTRUCTION'.

PREPARED BY: PACE
DESIGNED BY: NE
DRAWN BY: DS, WW
CHECKED BY: TP
SCALE: AS NOTED
DATE: NOV 2025
JOB NO. B614

TITLE: TITLE SHEET

JOB: TOWN OF JEROME WASTEWATER TREATMENT PLANT — YAVAPAI CO. AZ

SHEET
G1.0
1 OF 99 SHEETS

JOB NO. B614

SHEET INDEX

DWG No.	SHT No.	TITLE
GENERAL		
1	G1.0	TITLE SHEET
2	G1.1	SHEET INDEX
3	G2.0	GENERAL NOTES AND ABBREVIATIONS
4	G3.0	HYDRAULIC PROFILE
5	G3.1	HYDRAULIC PROFILE
6	G3.2	PROCESS FLOW DIAGRAM
CIVIL		
7	C-1.0	NOTES
8	C-1.1	NOTES 2, LEGENDS, ABBREVIATIONS
9	C-1.2	TYPICAL SECTIONS
10	C-2.0	GRADING SITE MAP, SURVEY CONTROL
11	C-2.1	WWTP SITE GRADING-10SC
12	C-2.2	NORTH DR IMPROVEMENTS
13	C-2.3	WWTP ACCESS RD P&P 25+00+TO 30+00
14	C-2.4	WWTP ACCESS RD P&P 30+00 TO 35+00
15	C-2.5	WWTP ACCESS RD P&P 35+00 TO 37+50
16	C-2.6	WWTP ACCESS RD P&P 37+50 TO 39+75
17	C-2.7	NEW SEWER ACCESS ROAD
18	C-3.0	NEW SEWER SITE MAP, SURVEY CONTROL
19	C-3.1	NEW SEWER P&P
20	C-4.0	ALT SEWER SITE MAP, SURVEY CONTROL
21	C-4.1	ALT SEWER P&P 10+00 TO 15+25
22	C-4.2	ALT SEWER P&P 15+25 TO 20+50
23	C-4.3	ALT SEWER P&P 15+25 TO 20+50
24	C-4.4	ALT SEWER WEST TURNAROUND
25	C-4.5	ALT SEWER LATERAL PROFILES
MECHCANICAL		
26	M1.0	EXISTING SITE PLAN
27	M1.1	DEMOLITION PLAN PH-I
28	M1.2	DEMOLITION PLAN PH-II
29	M2.0	PROPOSED SITE PLAN
30	M2.1	YARD PIPING & GRADING PLAN
31	M2.2	YARD PIPING
32	M2.3	YARD PIPING
33	M2.4	YARD PIPING
34	M2.5	PLAN & PROFILE
35	M3.0	SBR MECHANICAL PLAN
36	M3.1	SBR MECHANICAL PLAN
37	M3.2	SBR MECHANICAL SECTIONS
38	M4.0	DEWATERING & CCC MECH PLAN
39	M4.1	CHLORINE CONTACT BASIN SECTION
40	M4.2	DEWATERING SECTION
41	M5.0	SLUDGE DRYING BEDS PLAN
42	M5.1	SLUDGE DRYING BEDS SECTIONS
43	M5.2	DRYING BED LIFT STATION SECTIONS
44	M6.0	EMERGENCY OVERFLOW BASIN PLAN AND SECTIONS
45	M7.0	BLOWER OPS PLAN
46	M8.0	MECHANICAL DETAILS I
47	M8.1	MECHANICAL DETAILS II
48	M8.2	MECHANICAL DETAILS III
49	M8.3	MECHANICAL DETAILS IV
50	M8.4	MECHANICAL DETAILS V
51	M8.5	MECHANICAL DETAILS VI
STRUCTURAL		
52	S1.1	GENERAL STRUCTURAL NOTES
53	S1.2	GENERAL STRUCTURAL NOTES
54	S1.3	TYPICAL DETAILS
55	S1.4	TYPICAL DETAILS
56	S1.5	TYPICAL DETAILS
57	S1.6	TYPICAL DETAILS
58	S1.7	TYPICAL DETAILS
59	S2.0	FOUNDATION PLAN
60	S2.01	FRAMING PLAN
61	S2.10	FRAMING PLAN
62	S3.1	FOUNDATION DETAILS
63	S3.2	FOUNDATION DETAILS
64	S3.3	FOUNDATION DETAILS
65	S4.1	FRAMING DETAILS
66	S4.2	FRAMING DETAILS

ARCHITECTURAL		
67	A1.0	BLOWER OPS ARCH PLAN
68	A2.0	BLOWER OPS ARCH REFLECTED CEILING PLAN
69	A3.0	BLOWER OPS ARCH SEWER & PLUMBING PLAN
70	A4.0	BLOWER OPS ARCH ELEVATIONS & SECTIONS
ELECTRICAL		
71	E1.1	ELECTRICAL COVER SHEET
72	E1.2	ELECTRICAL LEGEND
73	E2.1	SINGLE LINE DIAGRAM I
74	E2.2	SINGLE LINE DIAGRAM II
75	E2.3	LOAD CALCULATIONS
76	E2.4	WIRE & COND TABLES I
77	E2.5	WIRE & COND TABLES II
78	E3.1	ELECTRICAL PROPOSED SITE PLAN
79	E3.2	ELECTRICAL SBR PLAN
80	E3.3	ELECTRICAL DEWATERING PAD
81	E3.4	ELECTRICAL BLOWER OPS
82	E3.5	ELECTRICAL DRYING BED LIFT STATION
83	E3.6	ELECTRICAL OVERFLOW BASIN
84	E4.1	ELECTRICAL DETAILS I
85	E4.2	ELECTRICAL DETAILS II
86	E4.3	ELECTRICAL DETAILS III
87	E4.4	ELECTRICAL DETAILS IV
88	E4.5	ELECTRICAL DETAILS V
89	E4.6	ELECTRICAL DETAILS VI
90	E5.1	ELECTRICAL SCHEMATICS I
91	E5.2	ELECTRICAL SCHEMATICS II
92	E5.3	ELECTRICAL SCHEMATICS III
P&ID		
93	I0.0	P&ID GENERAL NOTES
94	I1.0	HEADWORKS
95	I1.1	SEQUENCING BATCH REACTOR
96	I1.2	CHLORINE CONTACT & DIGESTER
97	I1.3	BLOWER ROOM
98	I1.4	DEWATERING & LIFT STATIONS
99	I1.5	GENERATOR

LEGEND

- ASPHALT
- DECOMPOSED GRAVEL FILL
- CONCRETE
- SAND
- BACKFILL
- ENGINEERED BACKFILL
- DEMO
- EXISTING 1' CONTOUR
- CONSTRUCTION NOTES INCL. FITTINGS, VALVES & MISC. EQUIPMENT (SEE THE SAME SHT.)
- THRUST BLOCK
- EQUIPMENT

ABBREVIATIONS

AB	AGGREGATE BASE
AC	ASPHALT CONCRETE
A/C	AIR CONDITIONER
ADF	AVERAGE DAY FLOW
APPROX	APPROXIMATELY
ARCH	ARCHITECTURAL
ARV	AIR RELEASE VALVE
AUTO	AUTOMATIC
AUX	AUXILIARY
AVV	AIR VACUUM VALVE
AWS	ALARM WATER SURFACE
BO	BLOWOFF
BC	BEGINNING OF CURVE
BF	BLIND FLANGE
BLDG	BUILDING
BM	BEAM, BENCHMARK
BOD	BIOCHEMICAL OXYGEN DEMAND
BOS	BOTTOM OF SURFACE
BOT	BOTTOM
BVC	BEGIN VERTICAL CURVE
CATV	CABLE TELEVISION
CFH	CUBIC FOOT PER HOUR
CFM	CUBIC FOOT PER MINUTE
CFS	CUBIC FOOT PER SECOND
CH	CHUCK
CMU	CONCRETE MASONRY UNIT
CO	CLEANOUT
COTG	CLEANOUT TO GRADE
CONST	CONSTRUCTION
CPLG	COUPLING
CPVC	CHLORINATED POLYVINYL CHLORIDE
CTR	CENTER
CV	CHECK VALVE
CW	COLD WATER
CYL	CYLINDER
D	DRAIN
DAF	DISSOLVED AIR FLOATATION
DI	DROP INLET
DIA	DIAMETER
DIP	DUCTILE IRON PIPE
DO	DISSOLVED OXYGEN
DTL	DETAILS
DWG	DRAWING
E	ELECTRICAL
EA	EACH
EC	END OF CURVE
ECC	ECCENTRIC
EF	EACH FACE
EFF	EFFLUENT
EL	ELEVATION
EP	EDGE OF PAVEMENT
EQUIP	EQUIPMENT
EW	EACH WAY
EXH	EXHAUST
EX	EXISTING
FC	FLEXIBLE COUPLING
FD	FLOOR DRAIN
FF	FINISHED FLOOR
FG	FINISHED GROUND
FH	FIRE HYDRANT
FL	FLOW LINE
FLEX	FLEXIBLE
FLG	FLANGE
FM	FORCE MAIN
FPS	FEET PER SECOND
FS	FINISHED SLAB
FT	FEET
FUT	FUTURE
G	GAS
GA	GAUGE
GAL	GALLONS
GALV	GALVANIZED
GB	GRADE BREAK
GPD	GALLONS PER DAY
GPM	GALLONS PER MINUTE
H/A	HAND AUTOMATIC
HDPE	HIGH DENSITY POLYETHYLENE
HOA	HAND-OFF-AUTOMATIC
HORIZ	HORIZONTAL
HP	HIGH POINT
HWL	HIGH WATER LEVEL
HWS	HIGH WATER SURFACE
HZ	HERTZ
ID	INSIDE DIAMETER
I&C	INSTRUMENTATION & CONTROLS INTEGRATOR
IN	INCHES
INF	INFLUENT
IRR	IRRIGATION
INV	INVERT
JB	JUNCTION BOX
LBS	POUNDS
LBS/D	POUNDS PER DAY
LF	LINEAR FEET
LP	LOW PRESSURE
LWL	LOW WATER LEVEL
LWS	LOW WATER SURFACE
MAX	MAXIMUM
MCC	MOTOR CONTROL CENTER
MECH	MECHANICAL
MFR	MANUFACTURER
MGD	MILLION GALLONS PER DAY
MG/L	MILLIGRAMS PER LITER
MH	MANHOLE OR MAINTENANCE HOLE
MIN	MINIMUM, MINUTE
MISC	MISCELLANEOUS
MJ	MECHANICAL JOINT
MLSS	MIXED LIQUOR SUSPENDED SOLIDS
MMADF	MAX MONTH AVERAGE DAY FLOW
N	NORTHING
N/C	NORMALLY CLOSED
N/O	NORMALLY OPEN
NTS	NOT TO SCALE
NWL	NORMAL WATER LEVEL
NPSH	NET POSITIVE SUCTION HEAD
OC	ON CENTER
OD	OUTSIDE DIAMETER
PG	PRESSURE GAUGE
PI	POINT OF INTERSECTION
PO	PUSH ON
PP	POWER POLE, PIPE PENETRATION
PRFV	PRESSURE RELIEF VALVE
PRC	POINT OF REVERSE CURVE
PRV	PRESSURE REGULATING (REDUCING) VALVE
PS	PRESSURE SWITCH, PIPE SUPPORT
PSI	POUNDS PER SQUARE INCH
PV	PLUG VALVE
PVC	POLYVINYL CHLORIDE
PVMT	PAVEMENT
PW	POTABLE WATER
R	RADIUS
RAS	RETURN ACTIVATED SLUDGE
RED	REDUCER
REQ'D	REQUIRED
RPM	REVOLUTIONS PER MINUTE
RQMT	REQUIREMENT
R&R	REMOVE AND RELOCATE (REINSTALL)
R&S	REMOVE AND SAVE (SALVAGE)
R/W	RIGHT OF WAY
R&W	REMOVE AND WASTE
RW	RECLAIMED WATER
S	SLOPE
SS	SANITARY SEWER
SSMH	SANITARY SEWER MANHOLE
SBR	SEQUENCING BATCH REACTOR
SD	STORM DRAIN
SE	SECONDARY EFFLUENT
SEC	SECTION
SHT	SHEET
SOV	SHUT OFF VALVE
SPEC	SPECIFICATION
SQ	SQUARE
SS	STAINLESS STEEL
ST	STREET
STA	STATION
T&B	TOP AND BOTTOM
TB	THRUST BLOCK
TBA	TO BE ABANDONED
TDH	TOTAL DYNAMIC HEAD
TEL	TELEPHONE
TEMP	TEMPERATURE
TOS	TOP OF SLAB
TOW	TOP OF WALL
TYP	TYPICAL
UNO	UNLESS NOTED OTHERWISE
VAC	VOLTS ALTERNATING CURRENT
VDC	VOLTS DIRECT CURRENT
VERT	VERTICAL
VCP	VITRIFIED CLAY PIPE
W	WATER
WAS	WASTE ACTIVATED SLUDGE
W/O	WITHOUT
WS	WATER SURFACE

100% ISSUED FOR BID

NO	BY	DATE	REVISIONS	DATE	APP.

THESE DRAWINGS ARE THE PROPERTY OF P.A.C.E. AND SHALL NOT BE REPRODUCED IN ANY MANNER NOR BE USED FOR CONSTRUCTION UNLESS STAMPED 'ISSUED FOR CONSTRUCTION'.

Registered Professional Engineer (Civil) CERTIFICATE NO. 70097 Timothy B. Pierce Signed ARIZONA, U.S.A. Expires 12/31/28

PREPARED BY: PACE
DESIGNED BY: NE
DRAWN BY: DS, WW
CHECKED BY: TP
SCALE: AS NOTED
DATE: NOV 2025
JOB NO.: B614

TITLE: SHEET INDEX

JOB: TOWN OF JEROME WASTEWATER TREATMENT PLANT — YAVAPAI CO. AZ

PREPARED BY: TAYLOR B. PIERCE

PACE
Advanced Water Engineering
8723 E. Via de Ventura Suite A-144 Scottsdale, CA 85258
P: (480) 991-3995 | www.pacewater.com
R.C.E 70097 DATE

SHEET G1.1
2 OF 99 SHEETS

JOB NO. B614

W:\B614\Engineering\B614-30\sheets\B614 - G1.0 TITLE SHEET.dwg - Tab: G1.1 - by reddington on 04/21/26 at 12:17:57 PM

GENERAL NOTES:

1. ALL PAVING, GRADING, PIPING, AND UTILITY LINE CONSTRUCTION WORK WITHIN THE PUBLIC RIGHT OF WAY, ON PRIVATE STREETS, ACCESS WAYS, LOT GRADING, MATERIALS, AND WORKMANSHIP SHALL COMPLY WITH TOWN OF JEROME ENGINEERING STANDARDS AND SPECIFICATIONS, AND SHALL CONFORM TO THE LATEST MARICOPA ASSOCIATION OF GOVERNMENTS (MAG) AND A.D.O.T. STANDARD DETAILS AND SPECIFICATIONS. GRADING WORK SHALL CONFORM TO MAG SPECIFICATIONS, THE SOILS REPORT, AND CHAPTER 70 ENTITLED "EXCAVATION AND GRADING" OF THE UNIFORM BUILDING CODE (UBC) LATEST EDITION, SUBSECTIONS 7001 TO 7005, 7009 TO 7013, FIGURES 70-1 AND 70-2 AND AS STATED THEREIN. LOCAL MUNICIPAL STANDARD DETAILS WILL CONTINUE TO APPLY WHERE NOT ADOPTED OR INCLUDED BY MAG. THE FOLLOWING NOTES AND SPECIFICATIONS ARE HEREBY MADE A PART OF THE CONTRACT DOCUMENTS AND PROJECT SPECIFICATIONS. WHERE THERE EXISTS A CONFLICT BETWEEN THESE NOTES, MAG SPECS, UBC, THE SOILS REPORT, OR THE PROJECT SPECIFICATIONS, THE MORE STRINGENT OF THE REQUIREMENTS SHALL GOVERN UNLESS PRIOR CLARIFICATION FROM THE ENGINEER HAS BEEN GIVEN IN WRITING TO THE CONTRACTOR. THE CONTRACTOR AS STATED HEREIN SHALL MEAN THE GENERAL CONTRACTOR AND HIS ASSOCIATED SUBCONTRACTORS. THE GENERAL CONTRACTOR IS RESPONSIBLE FOR THE COORDINATION AND PERFORMANCE OF THE WORK OF ALL HIS SUBCONTRACTORS AND SUPPLIERS.
2. ALL WORK SHALL BE BID AND INSTALLED BY THE CONTRACTOR COMPLETE AND OPERATIONAL TO LINES, GRADES, AND FUNCTIONS INDICATED ON ALL PLANS AND SPECIFICATIONS. THE CONTRACTOR SHALL PROVIDE ALL LABOR, MATERIALS, EQUIPMENT, AND SERVICES NECESSARY TO COMPLETE ALL PROJECT EARTHWORK AND SITE WORK INCLUDING BUT NOT LIMITED TO: SITE CLEARING, GRUBBING, DEMOLITION, DEBRIS REMOVALS FROM THE SITE, IMPORT AND/OR EXPORT OF SOILS AND OTHER MATERIALS TO AND FROM THE SITE, BORROW MATERIALS, TEMPORARY SOILS MATERIAL STOCKPILING, BACKFILL OF ONSITE BORROW PITS, MOVING OF MATERIALS, CUT AND FILL, SLOPES, SOILS AND BANK STABILIZATION AND PROTECTION, BERMING, ROADWAY EXCAVATIONS, RELOCATIONS, STRUCTURE EXCAVATIONS, TRENCHING, ALL BACKFILLING, SITE GRADING, PAVING, PIPING, UTILITY LINE AND STORM DRAINAGE CONSTRUCTION, CURBS, SITE CONCRETE WORK AND OTHER MISCELLANEOUS SITE WORK STRUCTURES AND ITEMS INDICATED ON THE PLANS AND IN THE CONTRACT DOCUMENTS.
3. ANY QUANTITIES SHOWN ON PLANS ARE NOT VERIFIED BY THE ENGINEER. QUANTITIES ARE APPROXIMATE ONLY AND INTENDED AS A GUIDE FOR ESTIMATING PURPOSES. THE CONTRACTOR IS RESPONSIBLE FOR PROVIDING HIS OWN QUANTITY TAKE OFFS. THE CONTRACTOR SHALL VISIT THE SITE AND REVIEW THE SOILS CONDITIONS AND THE SOILS REPORT WITH THE PROJECT SOILS ENGINEER PRIOR TO BIDDING THIS PROJECT. ANY DISCREPANCIES IN SITE MATERIALS SHALL BE BROUGHT TO THE ATTENTION OF THE DESIGN ENGINEER 7 DAYS MINIMUM PRIOR TO BIDDING FOR REVIEW. ALL SHRINK OF EARTH MATERIAL OR EXCESS MATERIAL FROM UTILITY TRENCHES AND FOUNDATIONS SHALL BE INCLUDED IN THE CONTRACTOR'S BID.
4. THE ENGINEER WILL NOT BE RESPONSIBLE FOR CONSTRUCTION MEANS, METHODS, TECHNIQUES, SEQUENCES, OR PROCEDURES OR FOR SAFETY PRECAUTIONS OR PROGRAMS UTILIZED IN CONNECTION WITH THE WORK, AND HE WILL NOT BE RESPONSIBLE FOR THE CONTRACTOR'S FAILURE TO CARRY OUT THE WORK IN ACCORDANCE WITH THE CONTRACT DOCUMENTS.
5. THE CONTRACTOR SHALL BE RESPONSIBLE FOR VERIFYING THE LIMITS OF THE WORK AREA FOR ALL PHASES OF THE WORK PRIOR TO BEGINNING CONSTRUCTION OF THOSE PHASES. ALL CONSTRUCTION LIMITS, AREAS OF WORK, SETBACKS, PERIMETERS, ADJACENT PROPERTY LINES, BOUNDARIES, AND OTHER CRITERIA DEFINING THE LIMITS OF THE CONTRACTOR'S WORK AREA AND LIMITS SHALL BE STAKED BY THE CONTRACTOR'S SURVEYOR PRIOR TO CONSTRUCTION OF CLEARING OF THE SITE. THE CONTRACTOR SHALL BE RESPONSIBLE FOR FAMILIARIZING HIMSELF WITH THE EXTENT OF WORK TO BE DONE IN EACH SEPARATE PHASE OF THE PROJECT, AND ANY WORK NECESSARY IN INACTIVE PHASES REQUIRED TO DEEM THE ACTIVE PHASES FINISHED, SAFE, AND SERVICEABLE.
6. THE DESIGN ENGINEER RESERVES THE RIGHT TO MAKE MINOR FIELD MODIFICATIONS TO GRADES AND STRUCTURE DESIGNS TO ACCOMMODATE FIELD CONDITIONS FOUND ON THE SITE. THIS INCLUDES BUT IS NOT LIMITED TO MINOR MODIFICATIONS TO GRADE, ALIGNMENT, SLOPE, OR STRUCTURE LOCATIONS. THE ENGINEER SHALL HAVE THE RIGHT TO MAKE SUCH CHANGES IN WRITING IN THE LOCATION AND QUANTITIES OF WORK AS MAY BE DEEMED ADVISABLE.
7. NO JOB WILL BE CONSIDERED COMPLETE UNTIL FINAL GRADING IS COMPLETE AND ALL CURBS, PAVEMENT, AND SIDEWALKS HAVE BEEN SWEPT CLEAN OF ALL DIRT AND DEBRIS, ALL SURVEY MONUMENTS ARE INSTALLED AND ALL VALVES, MANHOLES, AND BOXES HAVE BEN ADJUSTED ACCORDING TO THE PLANS AND STANDARD DETAILS.
8. SEE SPECIFICATION SECTION 01 11 00 SUMMARY OF WORK FOR DIVISION OF RESPONSIBILITY. SEE SPECIFICATION SECTION 00 70 00 CONDITIONS OF THE CONTRACT FOR DEFINITIONS.
9. ALL CONSTRUCTION SHALL BE IN ACCORDANCE WITH UNITED STATES ENVIRONMENTAL PROTECTION AGENCY STANDARDS AND POLICIES AND CURRENT SUPPLEMENTS THERETO.
10. ANY WORK PERFORMED WITHOUT THE APPROVAL OF THE ENGINEER AND/OR ALL WORK AND MATERIAL NOT IN CONFORMANCE WITH THE SPECIFICATIONS IS SUBJECT TO REMOVAL AND REPLACEMENT AT THE CONTRACTOR'S EXPENSE.
11. DEBRIS SHALL BE DISPOSED OF WITHIN APPROVED DISPOSAL FACILITIES.
12. THE CONTRACTOR SHALL PROVIDE ADEQUATE MEANS FOR CLEANING TRUCKS AND/OR OTHER EQUIPMENT OF MUD PRIOR TO ENTERING PUBLIC STREETS. IT IS THE CONTRACTOR'S RESPONSIBILITY TO CLEAN STREETS, ALLEY DUST, AND TAKE WHATEVER MEASURES ARE NECESSARY TO ENSURE THAT ALL ADJACENT ROADS ARE MAINTAINED IN A CLEAN, MUD AND DUST FREE CONDITION AT ALL TIMES.
13. CONTRACTOR SHALL TAKE MEASURES TO CONTROL DUST AND FUGITIVE EMISSIONS, INCLUDING BUT NOT LIMITED TO WATERING THE SITE TWICE DAILY DURING GRADING TO CONTROL DUST.
14. AN APPROVED SET OF PLANS SHALL BE ON THE JOB SITE AT ALL TIMES WORK IS IN PROGRESS. DEVIATION FROM THE PLANS WILL NOT BE ALLOWED WITHOUT AN APPROVED PLAN REVISION OR AUTHORIZATION FROM THE ENGINEER.
15. THESE DRAWINGS INDICATE THE GENERAL EXTENT OF THE REQUIRED WORK AND ARE NOT INTENDED TO INDICATE EVERY ELEMENT REQUIRED. THE CONTRACTOR SHALL FURNISH ALL ELEMENTS TO COMPLETE THE SCOPE OF WORK IN ACCORDANCE WITH THE CONTRACT DOCUMENTS. ALL ITEMS REQUIRING CLARIFICATIONS SHALL BE SUBMITTED AS A "REQUEST FOR INFORMATION" (RFI) TO THE ENGINEER PER SECTION 01 31 00 OF THE SPECIFICATIONS.
16. ALL CONSTRUCTION VEHICLES OR EQUIPMENT, MOBILE OR FIXED OPERATED, SHALL BE EQUIPPED WITH PROPERLY OPERATING AND MAINTAINED MUFFLERS IN ACCORDANCE WITH THE LOCAL NOISE ORDINANCES.
17. THE CONTRACTOR SHALL PROVIDE SHOP DRAWINGS FOR THE ENGINEER'S REVIEW, AS MAY BE NECESSARY FOR THE EXECUTION OF THE WORK AND AS REQUIRED BY THE DRAWINGS AND SPECIFICATIONS.
18. DUE TO THE ONGOING OPERATION OF THE FACILITY, CONTRACTOR SHALL PROVIDE A SEQUENCE OF CONSTRUCTION FOR TOWN AND ENGINEER'S APPROVAL. TWO WEEKS PRIOR TO THE START OF CONSTRUCTION THE SEQUENCE SHALL INCLUDE A DETAILED SCHEDULE OF EVENTS AND TIMEFRAME. ALL EQUIPMENT, PIPING, LABOR, ETC. FOR THE SEQUENCE SHALL BE THE RESPONSIBILITY OF THE CONTRACTOR. ALL TEMPORARY SHUTDOWNS AND CHANGES IN FACILITY OPERATION SHALL BE DISCLOSED TO OWNER AT LEAST 7 DAYS PRIOR.
19. PAVEMENT REPAIR, AS REQUIRED, MAY BE WITH COLD-MIX ASPHALT CONCRETE, WITH A MINIMUM THICKNESS OF 2 INCHES, USING AGGREGATE GRADING IN ACCORDANCE WITH MARSHALL MIX DESIGN OF SECTION 710 OF MAG UNIFORM STANDARD SPECIFICATIONS AND DETAILS FOR PUBLIC WORK CONSTRUCTION.
20. ALL CONSTRUCTION WORK SHALL BE PERFORMED IN ACCORDANCE WITH THE SOILS AND/OR GEOTECHNICAL REPORT PREPARED BY WESTERN TECHNOLOGIES, INC. DATED 10/25/2022. THIS REPORT IS SUPPLEMENTED BY 1) THESE PLANS AND SPECIFICATIONS, 2) YAVAPAI COUNTY PUBLIC WORKS STANDARDS AND SPECIFICATIONS, 3) STATE OF ARIZONA STANDARD DETAILS. IN THE EVENT OF CONFLICT, THE FORMER SHALL TAKE PRECEDENCE OVER THE LATTER. THE PERFORMANCE AND COMPLETION OF ALL WORK MUST BE TO THE SATISFACTION OF THE ENGINEER OF RECORD.

GENERAL CONSTRUCTION NOTES

ENGINEER'S NOTES

1. THE ENGINEER AND APPLICABLE AGENCY MUST APPROVE, PRIOR TO CONSTRUCTION, ANY ALTERATION TO OR VARIANCE FROM THESE PLANS. ANY VARIATION FROM THESE PLANS SHALL BE PROPOSED ON CONSTRUCTION FIELD PRINTS AND TRANSMITTED TO THE ENGINEER.
2. THE CONTRACTOR SHALL PROTECT AND MAINTAIN ALL EXISTING UTILITIES ON THE SITE. ANY DAMAGE TO EXISTING UTILITIES, WHETHER SHOWN OR NOT ON THE DRAWING SHALL BE REPAIRED/REPLACED AT THE CONTRACTOR'S EXPENSE. EXISTING SURFACE FEATURES AND FENCING SHALL BE REPLACED IN KIND.
3. ANY INSPECTION BY THE TOWN, COUNTY OR THE ENGINEER, SHALL NOT IN ANY WAY RELIEVE THE CONTRACTOR FROM ANY OBLIGATION TO PERFORM THE WORK IN STRICT COMPLIANCE WITH THE APPLICABLE CODES AND AGENCY REQUIREMENTS.
4. CONTRACTOR IS TO LOCATE ALL EXISTING PROPERTY MONUMENTS PRIOR TO CONSTRUCTION. NO EXISTING SURVEY MONUMENTATION SHALL BE REMOVED OR DISTURBED BY THE CONTRACTOR WITHOUT NOTIFICATION AND APPROVAL OF THE PROJECT SURVEYOR. THE CONTRACTOR SHALL CONTACT THE PROJECT SURVEYOR FOR THE SETTING OF REFERENCE POINTS 48 HOURS PRIOR TO DISTURBING OR REMOVING ANY MONUMENTS. A REGISTERED LAND SURVEYOR AT THE CONTRACTOR'S EXPENSE SHALL REPLACE ANY MONUMENTS DISTURBED DURING THE CONSTRUCTION OF THIS PROJECT.
5. NOTHING CONTAINED IN THE CONTRACT DOCUMENTS SHALL CREATE, NOR SHALL BE CONSTRUED TO CREATE, ANY CONTRACTUAL RELATIONSHIP BETWEEN THE ENGINEER AND THE CONTRACTOR OR ANY SUBCONTRACTOR.
6. ANY CONSTRUCTION WATER OBTAINED FROM THE TOWN WATER SOURCE WILL REQUIRE METER AND A BULK WATER PERMIT TO TRACK USAGE. THE TOWN WILL WAIVE FEES FOR PERMITTING AND USAGE IF USAGE IS LESS THEN 20,000 GALLONS. CONTACT THE TOWN OF JEROME AT (928) 634-7943 TO REQUEST A METER.
7. THE CONTRACTOR SHALL MAKE NO CLAIM AGAINST THE OWNER OR THE ENGINEER REGARDING ALLEGED INACCURACY OF CONSTRUCTION STAKES SET BY THE ENGINEER UNLESS ALL SURVEY STAKES SET BY THE ENGINEER ARE MAINTAINED INTACT AND CAN BE VERIFIED AS TO THEIR ORIGIN. IF, IN THE OPINION OF THE ENGINEER, THE STAKES ARE NOT MAINTAINED INTACT AND CANNOT BE VERIFIED AS TO THEIR ORIGIN, ANY REMEDIAL WORK REQUIRED TO CORRECT ANY ITEM OR IMPROPER CONSTRUCTION WORK IN THIS DEVELOPMENT SHALL BE PERFORMED AT THE SOLE EXPENSE OF THE RESPONSIBLE CONTRACTOR OR SUBCONTRACTOR.
8. TRAFFIC CONTROL SHALL BE MAINTAINED IN ACCORDANCE WITH THE TOWN OF JEROME MUNICIPAL CODES.
9. A PORTION OF THIS PROJECT SITE IS LOCATED WITHIN A DOCUMENTED 100-YR FEMA FLOODLAIN AS DESIGNATED ON THE PLANS.
10. IN CASES WHEN UNSTAKED EXISTING UTILITIES ARE ENCOUNTERED, SOME MINOR DEVIATION TO THE PROPOSED SEWER ALIGNMENT MAY BE ALLOWED TO MAINTAIN MINIMUM SEPARATION DISTANCES BETWEEN UTILITIES. ANY PROPOSED CHANGES TO THE ALIGNMENT MUST BE SUBMITTED TO THE TOWN'S REPRESENTATIVE FOR REVIEW. NO CHANGES WILL BE ALLOWED WITHOUT PROPER APPROVAL.
11. PRIOR TO BIDDING THE WORK, THE CONTRACTOR SHALL THOROUGHLY SATISFY HIMSELF AS TO THE ACTUAL CONDITIONS AND EARTHWORK QUANTITIES, IF ANY. NO CLAIM SHALL BE MADE AGAINST THE OWNER OR ENGINEER FOR ANY EXCESS OR DEFICIENCY THEREIN, ACTUAL OR RELATIVE.
12. THE ENGINEERS SHALL BE NOTIFIED BEFORE ANY ONSITE CONSTRUCTION BEGINS.
13. A SEPARATE PERMIT IS NECESSARY FOR ANY OFFSITE CONSTRUCTION.
14. APPROVAL OF THESE PLANS SHALL NOT PREVENT THE TOWN FROM REQUIRING CORRECTION OF ERRORS IN THE PLANS WHERE SUCH ERRORS ARE SUBSEQUENTLY FOUND TO BE IN VIOLATION OF ANY LAW OR ORDINANCE.

MECHANICAL CONSTRUCTION NOTES:

1. CONTRACTOR TO INSTALL PIPE SUPPORTS PER MANUFACTURER'S REQUIREMENTS AND SPECIFICATIONS. ALL DRY AREA PIPE SUPPORTS SHALL BE GALVANIZED STEEL U.N.O. ALL SUBMERGED PIPE SUPPORTS SHALL BE S.S. 316.
2. CONTRACTOR TO INSTALL PUMP BASE, GUIDE RAILS, AND BRACKETS PER MANUFACTURER'S REQUIREMENTS. CONTRACTOR SHALL CONFIRM SUPPLY OF PUMP MOUNTING EQUIPMENT WITH PUMP SUPPLIER.
3. ALL PROCESS PIPES SHALL BE COLOR COATED PER THE SPECIFICATIONS WITH THE EXCEPTION OF STAINLESS STEEL PIPES. ALL ABOVE GROUND PIPES SHALL ALSO BE OUTFITTED WITH A FLOW DIRECTION ARROW.
4. ALL ANCHORING/FASTENING SYSTEMS SHALL BE 316 S.S. REGARDLESS OF LOCATION, U.N.O.
5. CONTRACTOR SHALL SUBMIT SHOP DRAWINGS FOR REVIEW AND APPROVAL FOR EACH EQUIPMENT ITEM PRIOR TO INSTALLATION. INSTALLATION DETAILS FOR ALL EQUIPMENT ITEMS SHALL BE PER RESPECTIVE EQUIPMENT MANUFACTURER'S SHOP DRAWINGS AND RECOMMENDED INSTALLATION REQUIREMENTS.
6. ALL D.I.P. SHALL BE CLASS 350, UNLESS NOTED OTHERWISE.
7. ELEVATION OF EXISTING STRUCTURES, PIPING, AND COMPONENTS ARE APPROXIMATE. CONTRACTOR TO FIELD VERIFY PRIOR TO CONSTRUCTION.
8. PRECAST SUPPLIER TO PROVIDE STRUCTURAL CALCULATIONS STAMPED BY REGISTERED ENGINEER IN AZ TO DOCUMENT DESIGN OF PRECAST STRUCTURE.
9. GROOVE FITTINGS MAY BE USED IN LIEU OF FLANGE FITTINGS FOR ALL ABOVE GROUND D.I. PIPING.
10. CONTRACTOR SHALL BE RESPONSIBLE FOR ALL TEMPORARY PIPING AND EQUIPMENT NEEDED FOR PROCESS ISOLATION, BYPASS, AND TRANSITION.
11. ALL YARD PIPING SHALL BE SURVEYED FOR VERTICAL AND HORIZONTAL ALIGNMENT PRIOR TO BACKFILL.
12. ALL PIPE SUPPORTS SPACING SHALL MEET PIPING MANUFACTURER'S REQUIREMENTS.
13. STRUCTURAL DIMENSIONS CONTROLLED BY OR RELATED TO MECHANICAL OR ELECTRICAL EQUIPMENT SHALL BE VERIFIED BY THE CONTRACTOR AND REFLECTED ON SHOP DRAWING PRIOR TO CONSTRUCTION.
14. ALL PVC PIPE GREATER THAN 3" IN DIAMETER SHALL BE DIPS.
15. ALL EXPOSED PIPE SHALL INCLUDE HEAT TRACING AND INSULATION.
16. ALL NEW BURIED GRAVITY SEWER LINES AND FORCE MAINS SHALL BE INSTALLED WITH A MINIMUM 3' DEPTH OF EARTH COVER.

PERMITS

1. CONTRACTOR SHALL OBTAIN ALL PERMITS AT HIS OWN EXPENSE FROM LOCAL MUNICIPAL AND AIR POLLUTION CONTROL AUTHORITIES PRIOR TO BEGINNING CONSTRUCTION.
2. IT SHALL BE THE RESPONSIBILITY OF THE CONTRACTOR TO ARRANGE FOR THE RELOCATION AND RELOCATION COSTS, IF ANY, OF ALL UTILITIES, AND SUBMIT A UTILITY RELOCATION SCHEDULE TO THE MUNICIPALITY AND DESIGN ENGINEER PRIOR TO CONSTRUCTION. ALL PUBLIC UTILITY EQUIPMENT POLES, BOXES, STRUCTURES, AND MUNICIPAL UTILITY COMPANY EQUIPMENT SHALL BE RELOCATED BY THE APPROPRIATE UTILITY COMPANY OR MUNICIPALITY BEFORE ANY WORK IS STARTED.

RECORD DRAWINGS

1. ACCEPTANCE OF THE COMPLETED PAVING, GRADING, OR UTILITY INSTALLATION WILL NOT BE GIVEN UNTIL REPRODUCIBLE AS-BUILT PLANS HAVE BEEN SUBMITTED BY THE ENGINEER AND APPROVED BY THE LOCAL GOVERNING AGENCY.

OBSERVATION

1. THE CONTRACTOR SHALL CONTACT THE APPROPRIATE PUBLIC UTILITY COMPANIES FOR INSPECTION OF TRENCHING, BEDDING, AND BACKFILLING DONE IN CONJUNCTION WITH INSTALLATION OF THOSE UTILITIES ON THIS PROJECT.
2. SOILS COMPACTION TEST RESULTS MUST BE SUBMITTED TO THE ENGINEER'S OFFICE FOR ALL FILL MATERIAL FOR ROADS, TRENCH BACKFILL, AND SITE FILL MATERIALS UNDER SLABS AND STRUCTURES. NO FILL MATERIALS SHALL BE PLACED WITHOUT TESTING DURING PLACEMENT. CONTRACTOR SHALL SUBMIT ALL TEST RESULTS TO THE DESIGN ENGINEER AND GOVERNMENTAL AGENCIES.
3. CONTRACTOR SHALL SUBMIT A SCHEDULE, APPROVED IN WRITING BY A QUALIFIED CONSULTING TESTING AGENCY, FOR FREQUENCY, LOCATION, AND TYPE OF ALL PROJECT TESTING. THE CONTRACTOR WILL BE RESPONSIBLE FOR SCHEDULING AND COORDINATION OF ALL TESTING INCLUDING THE FOLLOWING TERMS WHICH SHALL BE TESTED IN ACCORDANCE WITH MAG SPECIFICATIONS:
   - 3.1. SUBGRADE COMPACTION
   - 3.2. BASE COURSE COMPACTION
   - 3.3. ASPHALT PAVEMENT MIX DESIGN QUALITY
   - 3.4. CONCRETE STRENGTH
   - 3.5. TRENCH BEDDING AND BACKFILL
   - 3.6. TESTING FOR UTILITIES, PIPING, AND DRAINAGE SYSTEMS

UTILITIES

1. A UTILITY COORDINATION MEETING SHALL BE COORDINATED BY THE CONTRACTOR PRIOR TO THE START OF ANY WORK. ALL UTILITY ISSUES SHALL BE ADDRESSED IN ACCODANCE WITH MAG 105.6.
2. LOCATION OF UNDERGROUND UTILITIES SHALL BE ACCOMPLISHED IN ACCORDANCE WITH ARS 40-360.22 PRIOR TO ANY EXCAVATION. BLUE STAKE SHALL BE CALLED AT 1-800-STAKE-IT FOR ACCURATE LOCATION OF UTILITIES AS NECESSARY AND PRIOR TO AN EXCAVATION. UTILITIES IF INDICATED ON PLANS ARE APPROXIMATE LOCATIONS ONLY, TAKEN FROM THE UTILITY COMPANY MAPS. IF THE CONTRACTOR ENCOUNTERS ANY LINES NOT INDICATED ON THE DRAWINGS OR MARKED IN THE FIELD BY THE UTILITY COMPANY THAT MAY INTERFERE WITH HIS WORK, HE SHALL NOTIFY THE APPROPRIATE UTILITY COMPANY IMMEDIATELY FOR DISPOSITION OF THOSE FACILITIES.
3. UTILITIES MUST BE LOCATED TO MINIMIZE INTERFERENCE WITH ONE ANOTHER, TO PROVIDE REQUIRED HORIZONTAL AND VERTICAL SEPARATIONS, AND TO PROVIDE MAINTENANCE ACCESS WITHOUT VIOLATING EASEMENT BOUNDARIES. SEPARATION BETWEEN UTILITIES PER MAG STANDARD.
4. ALL WATER MAINS, APPURTENANCES, AND INSTALLATIONS SHALL CONFORM TO A.W.W.A. STANDARDS AND ARIZONA DEPARTMENT OF ENVIRONMENTAL QUALITY AND TOWN OF JEROME REQUIREMENTS. WATER SYSTEMS SHALL BE TESTED PER A.D.E.Q. BULLETIN NO. 10 TO THE APPROPRIATE A.W.W.A. STANDARDS.

CONSTRUCTION STAKING

1. THE ACCURACY OF ALL CONSTRUCTION WORK SHALL BE MAINTAINED AND VERIFIED BY THE OWNER'S SURVEYOR AT THE OWNER'S EXPENSE BY PROVIDING CONSTRUCTION STAKING SUITABLE TO THE TOWN ENGINEER. STAKES WILL BE SET ESTABLISHING LINES AND GRADES (FINISH OR FLOWLINE) FOR ALL CONSTRUCTION INCLUDING ROADS, CURB AND GUTTER, SIDEWALKS, UTILITIES, STRUCTURES, AND OTHER WORK AS CONSIDERED NECESSARY BY THE ENGINEER. ALL SURVEY CONTROL SHALL BE SET BY THE OWNER'S SURVEYOR FROM MONUMENTS ACCEPTABLE TO THE ENGINEER.

GRADING AND EARTHWORK

1. NO GRADING OR TRENCHING WORK SHALL BEGIN PRIOR TO SUPPORTING AND PROTECTING EXISTING ONSITE AND ADJACENT PROPERTY FROM SETTLING, CRACKING, OR OTHER DAMAGE WHICH MIGHT RESULT. CONTRACTOR SHALL VERIFY FROM SOILS REPORT RECOMMENDATIONS THE DEGREE OF DIFFICULTY REQUIRED FOR TRENCHING AND EXCAVATION WORK BASED ON DEPTH AND TYPE OF MATERIALS TO BE ENCOUNTERED.
2. CLEARING AND GRUBBING: EXAMINE SITE AND PROVIDE NECESSARY EQUIPMENT AND LABOR TO REMOVE FROM THE SITE AND DISPOSE OF STUMPS, ROOTS, ROCKS, LOOSE FILL, VEGETATION DEBRIS, AND ANY OTHER OBJECTIONABLE MATERIALS FROM THE BUILDING AND MATERIAL. CLEAN. UNCLASSIFIED ONSITE SOILS MAY BE USED IN GENERAL AS FILL MATERIAL. SEE MAG SPECIFICATIONS 201 AND 215.
3. SUBGRADE PREPARATION: IF THE NATURAL SUBGRADE IS LESS THAN THE REQUIRED DENSITY, IT SHALL BE SCARIFIED AND COMPACTED TO A MINIMUM DEPTH OF TWELVE INCHES OR AS NOTED IN THE SOILS REPORT IMMEDIATELY PRIOR TO PLACING SUBSEQUENT FILL MATERIAL THEREON. THE CONTRACTOR IS RESPONSIBLE FOR MAINTENANCE AND REPAIR OF DAMAGE TO PREPARED SUBGRADE CAUSED BY CONTRACTOR'S OPERATIONS OR PUBLIC TRAFFIC UNTIL ACCEPTANCE OF PROJECT. NO MATERIALS SHALL BE PLACED UPON THE PREPARED SUBGRADE UNTIL IT MEETS THE SPECIFIED REQUIREMENTS. ROADWAY SUBGRADE COMPACTION INCLUDES SUBGRADE UNDER ALL PAVEMENT, CURB, SIDEWALKS, SHOULDERS, AND FILL SLOPES. SUBGRADE TOLERANCES SHALL BE AS SPECIFIED IN MAG SECTION 301. OPEN LANDSCAPED AREAS SHALL BE GRADED TO ±0.2 FEET.
4. IT IS THE RESPONSIBILITY OF THE CONTRACTOR TO CONTACT THE TESTING COMPANY FOR SCHEDULING OF COMPACTION TESTING. THE FREQUENCY OF DENSITY AND MOISTURE TESTS REQUIRED FOR ADEQUATE CONTROL SHALL BE THE RESPONSIBILITY OF THE SOILS ENGINEER WHO SHALL CERTIFY TO THE ENGINEER AND CONTRACTOR AT PROJECT END THAT THE ROADBED FILL IS COMPACTED AS OUTLINED HEREIN. COMPACTION SHALL BE ACHIEVED BY MECHANICAL MEANS. IN NO CASE SHALL STRUCTURE BACKFILLING BE FLOOD WATER SETTLED.
5. ALL SLOPE CONSTRUCTION AND ROADWAY EXCAVATION SHALL CONFORM TO THE REQUIREMENTS OF MAG SPECIFICATIONS SECTIONS 20, 205, 211, 301, AND UBC SECTIONS 7009 AND 8010. CUT AND FILL SLOPES SHALL BE AS INDICATED ON THE DETAILS AND PLANS. CUT AND FILL SLOPE GRADIENTS SHALL NOT EXCEED 2:1 IN STEEPNESS WITHOUT WRITTEN AUTHORIZATION FROM THE SOILS ENGINEER AND EXAMINATION BY THE DESIGN ENGINEER. ALL SLOPE CONDITIONS SHALL BE PROVIDED WITH THE APPROPRIATE BENCHES AS SPECIFIED IN THE REFERENCE DOCUMENTS AND INDICATED ON THE PLANS. IF SOILS CONDITIONS ARE ENCOUNTERED WHICH DO NOT ALLOW THE ESTABLISHMENT OF THE INDICATED CUT OR FILL SLOPES, THE DESIGN ENGINEER AND SOILS ENGINEER SHALL BE CONTACTED IMMEDIATELY TO DETERMINE AN ADJUSTMENT TO THE SLOPE GRADIENT OR TO ESTABLISH A METHOD OF STABILIZATION. ALL FILL SLOPES SHALL BE COMPACTED AS EACH LIFT OF FILL MATERIAL IS PLACED. ALL CUT AND FILL SLOPES SHALL BE UNIFORMLY GRADED TO LINES AND GRADES INDICATED. TOPS OF ALL CUT SLOPES SHALL BE ROUNDED AND ALL UNSTABLE AND LOOSE MATERIAL AT TOP OF SLOPE SHALL BE REMOVED. TOP OF CUT SLOPES OVER 10' HIGH SHALL BE PROVIDED WITH BRO DITCHES FOR DRAINAGE. ALL CUT AND FILL SLOPES SHALL BE REVEGETATED WITH A MIXTURE OF NATIVE GRASSES AND WILD FLOWER SEED OR AS SPECIFIED WITHIN THE LANDSCAPE PLANS. COMPACT ALL SHOULDERS AND BACKFILLS BEHIND ALL STRUCTURES AND WALLS.
6. COMPACT TO THE FOLLOWING SPECIFIED PERCENT OF MAXIMUM DENSITY AS DETERMINED IN ACCORDANCE WITH ASTM D698 AND MAG SECTION 211 OR AS DIRECTED IN THE SOILS REPORT.

MINIMUM PERCENT COMPACTION

SUBGRADE SOIL:

ROADWAY AND STRUCTURE AREAS - - - - - - - - - - - - - -95
PAVED AREAS (PAVEMENTS, SIDEWALKS, & PADS) - - 95

EARTH FILL:

ROADWAY AND STRUCTURE AREAS - - - - - - - - - - - - - -95
PAVED ARES (PAVEMENTS, SIDEWALKS, & PADS) - - - 95
GRASSED AND PLANTING AREAS - - - - - - - - - - - - - - - - 85
AGGREGATE BASE COURSE - - - - - - - - - - - - - - - - - - - 100
BACKFILL AROUND STRUCTURES - - - - - - - - - - - - - - - -95

BACKFILL FOR UTILITY TRENCHES (PER MAG SECTION 601). PROVIDE TYPE 1 BACKFILL OR AS DIRECTED BY APPROPRIATE UTILITY REQUIREMENTS. BACKFILL FOR TRENCHES WITHIN 10' OF STRUCTURES AND WALLS SHALL BE COMPACTED TO 95% UNLESS DIRECTED OTHERWISE BY ENGINEER.

100% ISSUED FOR BID

NO	BY	DATE	REVISIONS	DATE	APP.

Registered Professional Engineer (Civil) CERTIFICATE NO. 70097 TAYLOR B. PIERCE Date Signed 10/31/25 ARIZONA, U.S.A. Expires 12/31/28

PREPARED BY: PACE
DESIGNED BY: NE
DRAWN BY: DS, WW
CHECKED BY: TP SCALE: AS NOTED
DATE NOV 2025
JOB NO. B614

TITLE
GENERAL NOTES AND ABBREVIATIONS

JOB
TOWN OF JEROME
WASTEWATER
TREATMENT PLANT
YAVAPAI CO. AZ

PREPARED BY:
PACE Advanced Water Engineering
8723 E. VIA de COMMERICO, SUITE A-204 | SCOTTSDALE, CA 85258
P: (408) 991-3595 | www.pacewater.com
TAYLOR B. PIERCE R.C.E 70097 DATE

SHEET
G2.0
3 OF 99 SHEETS
JOB NO. B614

THESE DRAWINGS ARE THE PROPERTY OF P.A.C.E. AND SHALL NOT BE REPRODUCED IN ANY MANNER NOR BE USED FOR CONSTRUCTION UNLESS STAMPED "ISSUED FOR CONSTRUCTION".

W:\B614\Engineering\B614-30\sheets\B614 - G2.0 GENERAL NOTES.dwg - Tab: G2.0 - by neddington on 11/18/25 at 3:11:17 PM

Item I.

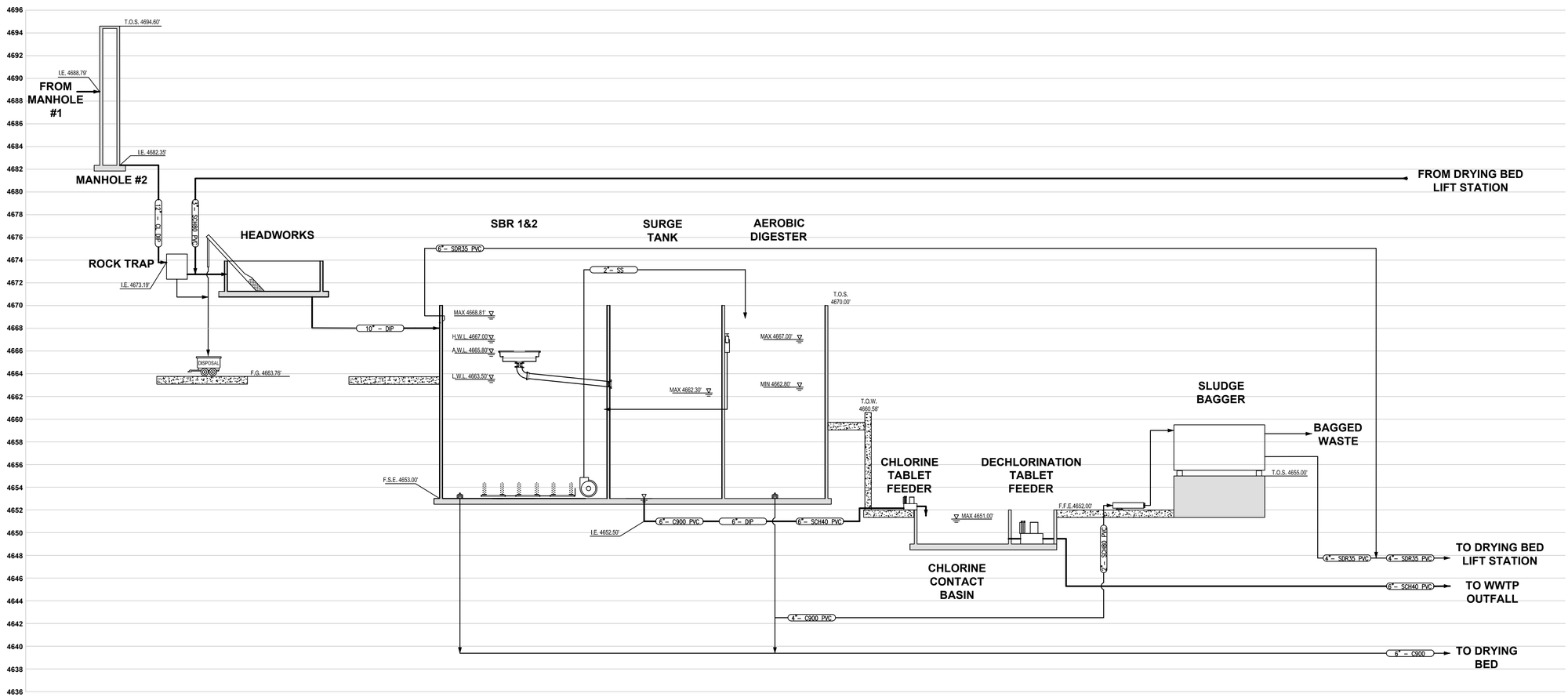

NO	BY	DATE	REVISIONS	DATE	APP.

THESE DRAWINGS ARE THE PROPERTY OF P.A.C.E. AND SHALL NOT BE REPRODUCED IN ANY MANNER NOR BE USED FOR CONSTRUCTION UNLESS STAMPED "ISSUED FOR CONSTRUCTION".

Registered Professional Engineer (Civil) CERTIFICATE NO. 70097 TAYLOR B. PIERCE Signed ARIZONA, U.S.A. Expires 12/31/28

PREPARED BY:	PACE
DESIGNED BY:	NE
DRAWN BY:	DS, WW
CHECKED BY:	TP
SCALE:	AS NOTED
DATE	NOV 2025
JOB NO.	B614

TITLE
HYDRAULIC PROFILE

JOB
TOWN OF JEROME
WASTEWATER
TREATMENT PLANT
YAVAPAI CO. AZ

100% ISSUED FOR BID

PREPARED BY:
TAYLOR B. PIERCE R.C.E 70097 DATE
PACE
Advanced Water Engineering
8723 E. Via de Commercio, Suite 2-A | CENTENNIAL, CA 85258
P. (408) 991-3595 | www.pacewater.com

SHEET
G3.0
4 OF 99 SHEETS

JOB NO. B614

W:\B614\Engineering\B614-30\sheets\B614-G3.0 HYDRAULIC PROFILE.dwg - Tab: G3.0 - by reddington on 03/02/26 at 9:52:17 AM

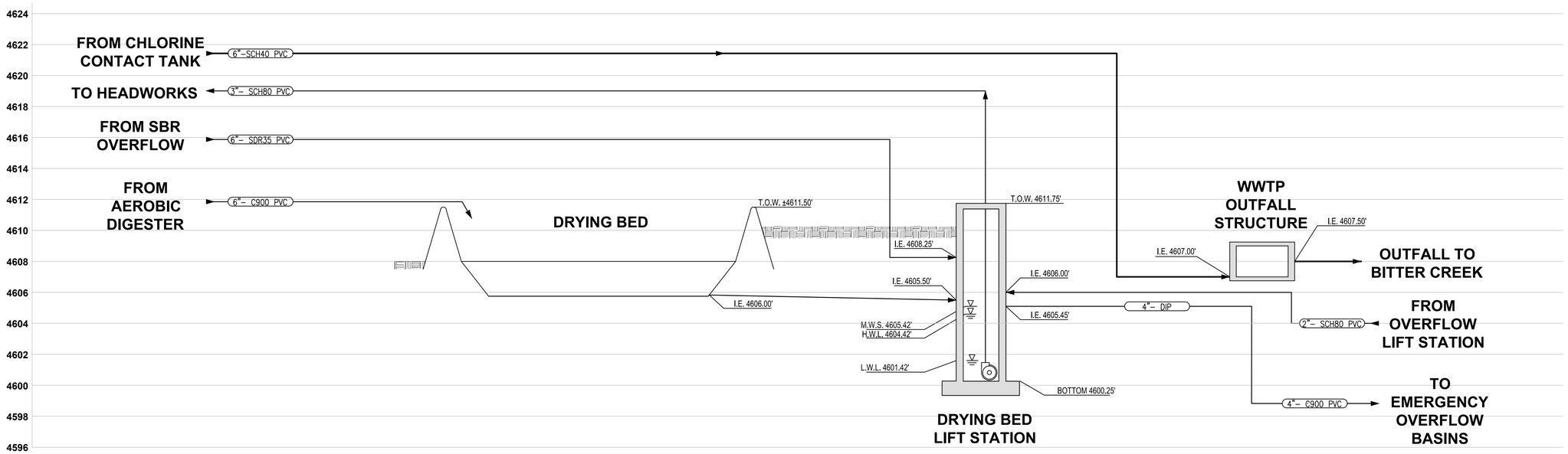

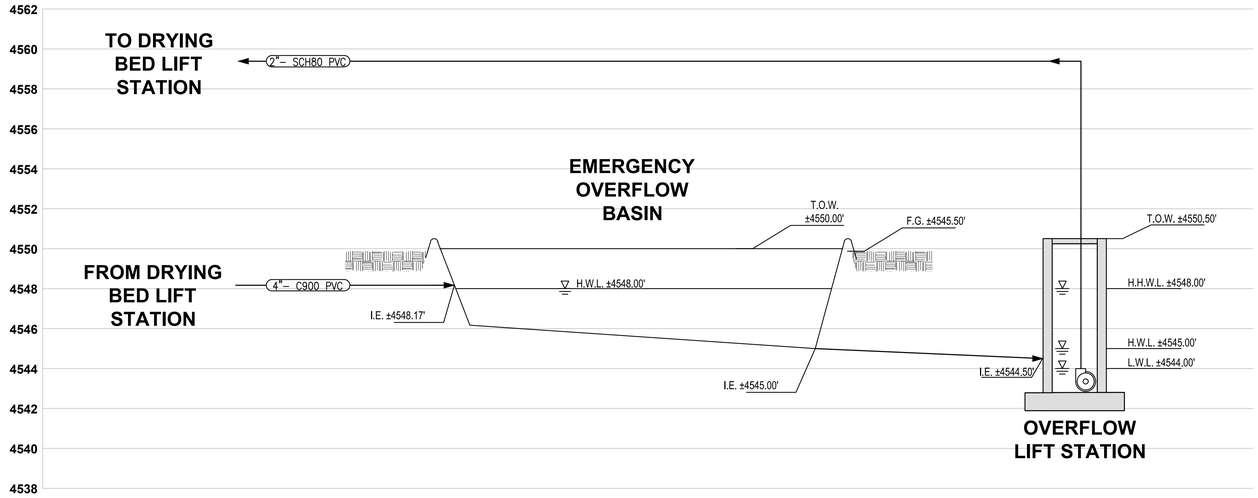

LEGEND

- PUMP
- ROTARY LOBE PUMP
- SLIDE/WEIR GATE
- TELESCOPING VALVE
- MUD VALVE
- PRIMARY FLOW
- SECONDARY FLOW

100% ISSUED FOR BID

NO	BY	DATE	REVISIONS	DATE	APP.

Registered Professional Engineer (Civil) CERTIFICATE NO. 70097 Timothy B. Pierce Signed on ARIZONA, U.S.A. Expires 12/31/28

THESE DRAWINGS ARE THE PROPERTY OF P.A.C.E. AND SHALL NOT BE REPRODUCED IN ANY MANNER NOR BE USED FOR CONSTRUCTION UNLESS STAMPED 'ISSUED FOR CONSTRUCTION'.

PREPARED BY: PACE
DESIGNED BY: NE
DRAWN BY: DS, WW
CHECKED BY: TP
SCALE: AS NOTED
DATE: NOV 2025
JOB NO.: B614

TITLE: HYDRAULIC PROFILE

JOB: TOWN OF JEROME WASTEWATER TREATMENT PLANT — YAVAPAI CO. AZ

PREPARED BY: TAYLOR B. PIERCE — R.C.E. 70097 — DATE

Advanced Water Engineering
8723 E. VIA de COMMERCIO, BLDG. A, SCOTTSDALE, CA 85258
P: (480) 991-3595 | www.pacewater.com

SHEET G3.1
5 OF 99 SHEETS

JOB NO. B614

W:\B614\Engineering\B614-3\Sheets\B614-G3.0-HYDRAULIC PROFILE.dwg - Tab: G3.1 - by roddington on 03/02/26 at 9:52:17 AM

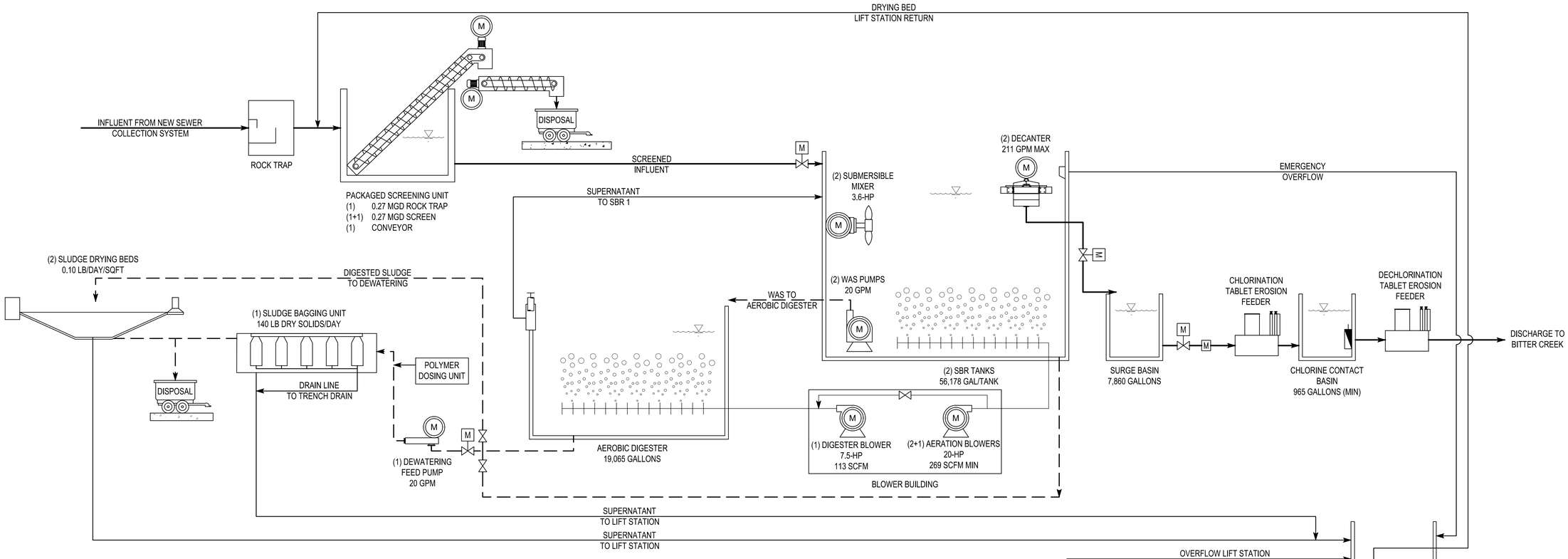

EQUIPMENT LIST

ITEM	ID #	DESCRIPTION	MANUFACTURER	MODEL #	HP	SPECIFICATIONS / DESCRIPTION	QTY
1	03010A 03010B	INFLUENT COARSE SCREEN	OR-TEC OR EQUAL	MB480T2 W/ RT	0.16	TANK MOUNTED MECHANICALLY CLEANED BAR SCREEN WITH TWO INDEPENDENT 6MM SCREENING CHANNELS W/ ISOLATING SLIDE GATE & SST ENCLOSURE, PROVIDED WITH SEPERATE ROCK TRAP W/ BAFFLE AND OUTLET WEIR. 480V, 3 PHASE, 60HZ. 0.27 MGD PEAK FLOW	1
2	05120 05121	SBR INFLUENT PLUG VALVES	BY SBR VENDOR		0.5	ELECTRICALLY ACTUATED 10" PLUG VALVE W/ OPEN/CLOSE SERVICE. 120V, 1 PHASE, 60 HZ	2
3	05110 05112	SBR SUBMERSIBLE MIXERS	BY SBR VENDOR		3.6	PREMIUM EFFICIENCY CONSTANT SPEED DIRECT DRIVE MOTOR MIXER W/ MAST MOUNT AND MOORING, 480V, 3 PHASE, 60HZ.	2
4	04310 04311 04312	SBR AERATION BLOWERS	BY SBR VENDOR		20	VFD CONTROLLED PD BLOWER UNIT W/ SOUND ATTENUATED ENCLOSURE, 361 SCFM @ 6.63 PSI, 480V, 3 PHASE, 60HZ.	3
5	04313	DIGESTER AERATION BLOWER	BY SBR VENDOR		7.5	VFD CONTROLLED PD BLOWER UNIT W/ SOUND ATTENUATED ENCLOSURE, 110 SCFM @ 6.63 PSI, 480V, 3 PHASE, 60HZ. CONTROLLED	1
6	04180 04181	RETREIVABLE FINE BUBBLE DIFFUSER SYSTEM	BY SBR VENDOR		N/A	RETRIEVABLE DIFFUSER RACK ASSEMBLY WITH MIN 30" EPDM TUBE DIFFUSERS, RANGE 1.0 CFM - 10.0 CFM (1 - 5 SCFM DESIGN) 2/ W EPDM FLEXIBLE DROP LINE AND QUICK DISCONNECT FITTINGS	60
7	04280	COARSE BUBBLE DIFFUSER SYSTEM	BY SBR VENDOR		N/A	3" EPDM DISK COARSE BUBBLE DIFFUSERS, RANGE 0.5 CFM - 5.0 CFM (0.5 - 2 SCFM DESIGN) 3/8" CXN	12
8	05100 05101	WAS TRANSFER PUMPS	BY SBR VENDOR		1.8	20 GPM @ 15' TDH SUBMERSIBLE NON-CLOG SLUDGE PUMP, 1.8 HP 480V, 3 PHASE, 60HZ W/ BASE AND SS GUIDE RAIL	2
9	05111 05113	SOLIDS EXCLUDING FLOATING DECANTER	BY SBR VENDOR		0.5	211 GPM FLOATING DECANTER W/ 120V, 1 PHASE, 60 HZ ACTUATED SUBMERGED WEIR, MOORING AND 6" DISCHARGE HOSE ASSEMBLY	2
10	05121 05123	SBR DECANT VALVE	BY SBR VENDOR		0.33	ELECTRICALLY ACTUATED 6" BUTTERFLY VALVE W/ MODULATING SERVICE, 480V, 3 PHASE, 60HZ	2
11	06221	TRANSFER/EFFLUENT VALVE	BY SBR VENDOR		0.33	ELECTRICALLY ACTUATED 6" BUTTERFLY VALVE W/ MODULATING SERVICE, 480V, 3 PHASE, 60HZ	1
12	06290	CHLORINATION EROSION TABLET FEEDER	NORWECO OR EQUAL	SERIES 4000	N/A	6" SCH 80 PVC HUB TABLET FEEDER W/ ADJUSTABLE INLET BAFFLE AND OUTLET WEIR AND 24" RISER ASSEMBLIES	1
13	05291	DECHLORINATION EROSION TABLET FEEDER	NORWECO OR EQUAL	SERIES 4000	N/A	6" SCH 80 PVC HUB TABLET FEEDER W/ ADJUSTABLE INLET BAFFLE AND OUTLET WEIR AND 24" RISER ASSEMBLIES	1
14	08400	DEWATERING FEED PUMP	BOERGER OR EQUAL	AN 40	3.0	20 GPM ROTARY LOBE SLUDGE PUMP, 3 HP 480V, 3 PHASE, 60HZ	1
15	08410	DRY POLYMER MAKE-DOWN AND FEED UNIT	PROMINENT OR EQUAL	ULTROMAT MT 140	0.25	POLYPROPOLENE PREP TANK W/ ELECTRIC STIRRER, WETTING CONE AND INJECTOR 480V, 3 PHASE, 60 HZ	1
16	08401	POLYMER METERING PUMP	PROMINENT OR EQUAL	DULCOFLEX - DFXa 0530	0.16	0.08 - 7.93 GPH SHELF-MOUNTED PERISTALTIC METERING PUMP, 73 PSI MAX BACK PRESSURE, 1/2" x 3/8" POLYURETHANE CONNECTOR TUBING, 115V, 1-PH SERVICE	1
17	08490	SLUDGE BAGGER SYSTEM	ENVIRODYNE, OR EQUAL	585-8i	N/A	20 GPM 8-BAG SLUDGE DEWATERING SYSTEM MAX LOADING RATE OF 20 GPM OR 100 #/HR - 25# ACTIVE POLYMER / TON DS	1
18	07400	DRYING BED DRAIN RETURN PUMPS	GRUNDFOS OR EQUAL	SEG.A15.40.EX.2.60H	4.16	70 GPM @ 90' TDH SUBMERSIBLE GRINDER PUMP, 5 HP 480V, 3 PHASE, 60HZ W/ BASE AND SS GUIDE RAIL	2
19	07401	PACKAGED OVERFLOW LIFT STATION	E ONE OR EQUAL	SP84S	2	31 GPM @ 82' TDH SDUPLEX GRINDER PRE-PACKAGED PUMP STATION, 2 HP 240V, 1 PHASE, 60 HZ W/ INTEGRAL FLOAT CONTROLS, PANEL AND SINGLE WARNING BEACON	1
20	SEE PID	PRESSURE TRANSDUCER	BY SBR VENDOR		N/A	304 SS SUBMERSIBLE PRESSURE TRANSDUCER WITH 4-20 mA SIGNAL OUTPUT	4
21	SEE PID	LEVEL SENSOR	BY SBR VENDOR		N/A	316 SS FLOAT SWITCH WITH THREE-CONDUCTOR ELECTRICAL CABLE	4
22	05160A 05161A	DISSOLVED OXYGEN CONTROLLER	BY SBR VENDOR		N/A	NEMA 4X ENCLOSURE WITH AC 100-230 VAC POWER SUPPLY, 4-20 mA SIGNAL OUTPUT	2
23	05160B 05161B	DISSOLVED OXYGEN PROBE	BY SBR VENDOR		N/A	304 SS PROBE	2
24	06240	EFFLUENT FLOW METER	BY SBR VENDOR		N/A	6" ELECTROMAGNETIC FLOW METER W/ TRAMSMITTER, ±1%ACCURACY 5D/3D, WITH 4-20 mA SIGNAL OUTPUT	1
25	01003	STANDBY GENERATOR			N/A	600 KW STANDBY GENERATOR W/ SOUND ATTENUATED OUTDOOR ENCLOSURE AND SUB BASE FUEL TANK	1

DESIGN FLOWS:

MAX MONTH AVE DAY FLOW:	90,000 GPD
MAX PEAK DAY FLOW:	135,000 GPD
PEAK HOUR FLOW:	270,000 GPD

INFLUENT PARAMETERS:

BOD:	360 MG/L
TSS:	250 MG/L
TKN:	40 MG/L

EFFLUENT PARAMETERS:

BOD:	<30 MG/L
TSS:	<30 MG/L
TN:	<10 MG/L
FECAL COLIFORM:	200 CFU/100 ML (4/7 SAMPLES); 800 CFU/100 ML (SINGLE SAMPLE MAX)

LEGEND

- FLOW METER
- PUMP
- BLOWER
- ROTARY LOBE PUMP
- ISOLATION VALVE/GATE
- MOTORIZED VALVE
- SLIDE/WEIR GATE
- TELESCOPING VALVE
- MIXER
- PRIMARY FLOW
- SECONDARY FLOW
- SLUDGE FLOW

100% ISSUED FOR BID

NO	BY	DATE	REVISIONS	DATE	APP.

Registered Professional Engineer (Civil) CERTIFICATE NO. 70097 Nicholas E. Pace Signed ARIZONA, U.S.A. Expires 12/31/28

THESE DRAWINGS ARE THE PROPERTY OF P.A.C.E. AND SHALL NOT BE REPRODUCED IN ANY MANNER NOR BE USED FOR CONSTRUCTION UNLESS STAMPED "ISSUED FOR CONSTRUCTION".

PREPARED BY: PACE
DESIGNED BY: NE
DRAWN BY: DS, WW
CHECKED BY: TP
SCALE: AS NOTED
DATE: NOV 2025
JOB NO.: B614

TITLE: PROCESS FLOW DIAGRAM

JOB: TOWN OF JEROME WASTEWATER TREATMENT PLANT — YAVAPAI CO. AZ

PREPARED BY:
PACE
Advanced Water Engineering
8733 E. Via de Ventura, Suite F-210, SCOTTSDALE, CA 85258
P: (480) 991-3995 | www.pacewater.com
TAYLOR B. PIERCE R.C.E 70097 DATE

SHEET
G3.2
6 OF 99 SHEETS

JOB NO. B614

W:\B614\Engineering\B614-30sheets\B614-G3.0 HYDRAULIC PROFILE.dwg - Tab: G3.2 - by neddington on 03/02/26 at 9:32:17 AM

1 GENERAL

1.1 ALL PAVING, GRADING PIPING AND UTILITY LINE CONSTRUCTION WORK WITHIN THE PUBLIC RIGHT-OF-WAY, ON PRIVATE STREETS, ACCESS WAYS, LOT GRADING, MATERIALS, AND WORKMANSHIP SHALL COMPLY WITH TOWN OF JEROME ENGINEERING STANDARDS AND SPECIFICATIONS, AND SHALL CONFORM TO THE LATEST MARICOPA ASSOCIATION OF GOVERNMENTS (MAG) AND A.D.O.T. STANDARD DETAILS AND SPECIFICATIONS. GRADING WORK SHALL CONFORM TO MAG SPECS, THE SOILS REPORT* AND CHAPTER 70 ENTITLED "EXCAVATION AND GRADING" OF THE UNIFORM BUILDING CODE (UBC) LATEST EDITION, SUBSECTIONS 7001 TO 7005, 7009 TO 7013, FIGURES 70-1 AND 70-2 AND AS STATED THEREIN. LOCAL MUNICIPAL STANDARD DETAILS WILL CONTINUE TO APPLY WHERE NOT ADOPTED OR INCLUDED BY MAG. THE FOLLOWING NOTES AND SPECIFICATIONS ARE HEREBY MADE A PART OF THE CONTRACT DOCUMENTS AND PROJECT SPECIFICATIONS. WHERE THERE EXISTS A CONFLICT BETWEEN THESE NOTES, MAG SPECS, UBC, THE SOILS REPORT* OR THE PROJECT SPECIFICATIONS, THE MORE STRINGENT OF THE REQUIREMENTS SHALL GOVERN UNLESS PRIOR CLARIFICATION FROM THE ENGINEER HAS BEEN GIVEN IN WRITING TO THE CONTRACTOR. THE CONTRACTOR AS STATED HEREIN SHALL MEAN THE GENERAL CONTRACTOR AND HIS ASSOCIATED SUBCONTRACTORS. THE GENERAL CONTRACTOR IS RESPONSIBLE FOR THE COORDINATION AND PERFORMANCE OF THE WORK OF ALL OF HIS SUBCONTRACTORS AND SUPPLIERS.

1.2 ALL WORK SHALL BE BID AND INSTALLED BY THE CONTRACTOR COMPLETE AND OPERATIONAL TO LINES, GRADES AND FUNCTIONS INDICATED ON ALL PLANS AND SPECIFICATIONS. PROVIDE ALL LABOR, MATERIALS, EQUIPMENT AND SERVICES NECESSARY TO COMPLETE ALL PROJECT EARTHWORK AND SITE WORK INCLUDING BUT NOT LIMITED TO: SITE CLEARING, GRUBBING, DEMOLITION'S, DEBRIS REMOVALS FROM THE SITE, IMPORT AND/OR EXPORT OF SOILS AND OTHER MATERIALS TO AND FROM THE SITE, BORROW MATERIALS, TEMPORARY SOILS MATERIAL STOCKPILING, BACKFILL OF ONSITE BORROW PITS, MOVING OF MATERIALS, CUT AND FILL, SLOPES, SOILS AND BANK STABILIZATION AND PROTECTION, BERMING, ROADWAY EXCAVATIONS, RELOCATION'S, STRUCTURE EXCAVATIONS, TRENCHING, ALL BACKFILLING, SITE GRADING, PAVING, PIPING, UTILITY LINE AND STORM DRAINAGE CONSTRUCTION, CURBS, SITE CONCRETE WORK AND OTHER MISCELLANEOUS SITE WORK STRUCTURES AND ITEMS INDICATED ON THE PLANS AND IN THE CONTRACT DOCUMENTS.

1.4 ANY QUANTITIES SHOWN ON PLANS ARE NOT VERIFIED BY THE ENGINEER. QUANTITIES ARE APPROXIMATE ONLY AND INTENDED AS A GUIDE FOR ESTIMATING PURPOSES. THE CONTRACTOR IS RESPONSIBLE FOR PROVIDING HIS OWN QUANTITY TAKE OFFS. THE CONTRACTOR SHALL VISIT THE SITE AND REVIEW THE SOILS CONDITIONS AND THE SOILS REPORT* WITH THE PROJECT SOILS ENGINEER PRIOR TO BIDDING THIS PROJECT. ANY DISCREPANCIES IN SITE MATERIALS SHALL BE BROUGHT TO THE ATTENTION OF THE DESIGN ENGINEER 7 DAYS MINIMUM PRIOR TO BIDDING FOR REVIEW. ALL SHRINK OF EARTH MATERIAL OR EXCESS MATERIAL FROM UTILITY TRENCHES AND FOUNDATIONS SHALL BE INCLUDED IN THE CONTRACTOR'S BID.

1.5 THE ENGINEER MAY REQUIRE THE SUBMITTAL OF A "CERTIFICATE OF COMPLIANCE" AND/OR "MANUFACTURER'S GUIDELINES" FOR ANY MATERIALS USED IN THE WORK. MANUFACTURER'S GUIDELINES SHALL CONSISTS OF WRITTEN INSTRUCTIONS FOR SHIPPING, HANDLING, UNLOADING, CUTTING, JOINING, INSTALLATION, STORAGE, AND/OR ANY OTHER FACETS OF CONSTRUCTION

1.6 THE ENGINEER MAY REQUIRE ANY MATERIALS USED IN THE WORK TO BE TESTED ACCORDING TO AASHTO AND ASTM STANDARDS. THE CONTRACTOR SHALL, AT HIS EXPENSE, SUPPLY CERTIFICATES OR RESULTS OF TESTING.

1.7 ALL WORK AND MATERIALS NOT CONFORMING TO SPECIFICATIONS OR PERFORMED WITHOUT THE CONSENT OF THE OWNER OR HIS REPRESENTATIVE WILL BE SUBJECT TO REJECTION BY THE OWNER AND/OR ENGINEER AND REPLACED AT THE CONTRACTOR'S EXPENSE.

1.8 THE CONTRACTOR SHALL GUARD AGAINST DAMAGE DURING CONSTRUCTION TO ADJACENT PROPERTIES, FENCES, WALLS AND UTILITY EQUIPMENT. ANY ITEMS DAMAGED BY CONSTRUCTION SHALL BE REPLACED WITH SAME KIND OR BETTER AT CONTRACTOR'S EXPENSE.

1.9 NO CONSTRUCTION SHALL BEGIN UNTIL CONFLICTING UNDERGROUND UTILITY MITIGATING CONSTRUCTION IS COMPLETED, IF ANY, AND UNTIL PIPE SLEEVES AND SERVICE STUBS TO ALL BUILDINGS OR LOTS HAVE BEEN EXTENDED.

1.10 NO EXISTING SURVEY MONUMENTATION SHALL BE REMOVED OR DISTURBED BY THE CONTRACTOR WITHOUT NOTIFICATION AND APPROVAL OF THE PROJECT SURVEYOR. THE CONTRACTOR SHALL CONTACT THE PROJECT SURVEYOR FOR THE SETTING OF REFERENCE POINTS 48 HOURS PRIOR TO DISTURBING OR REMOVING ANY MONUMENTS. THE CONTRACTOR SHALL BE FINANCIALLY RESPONSIBLE FOR COSTS TO REESTABLISH MONUMENTATION OR CONTROLS REMOVED WITHOUT PRIOR NOTICE AND APPROVAL.

1.11 TRAFFIC CONTROL SHALL CONFORM TO THE LOCAL MUNICIPAL ADOPTED STANDARDS.

1.12 THESE PLANS ARE SUBJECT TO THE INTERPRETATION OF THE INTENT BY THE ENGINEER. ANY QUESTIONS REGARDING THESE PLANS MUST BE GIVEN TO THE ENGINEER AND YOU MUST HAVE RECEIVED A RESPONSE TO THE QUESTION. ANYONE WHO TAKES IT UPON THEMSELVES TO MAKE AN INTERPRETATION OF THE DRAWINGS OR MAKES REVISIONS TO THE SAME WITHOUT CONFERRING WITH THE DESIGN ENGINEER SHALL BE RESPONSIBLE FOR THE CONSEQUENCES THEREOF.

1.13 CONTRACTOR SHALL COORDINATE HIS WORK WITH THE DESIGN ENGINEER, OWNER, PUBLIC UTILITY COMPANIES AND OTHER ASSOCIATED TRADES ON AND ADJACENT TO THE PROJECT SITE. COORDINATE INSTALLATION OF ALL PUBLIC AND PRIVATE UNDERGROUND UTILITIES, PIPES, CONDUITS AND PIPE SLEEVE SIZES AND LOCATIONS PRIOR TO THEIR PLACEMENT. INSTALLATION: THE CONTRACTOR IS RESPONSIBLE FOR SETTING CAPPED SLEEVES AND PROVIDING TYPE 1 COMPACTION IN ALL BACKFILLED TRENCHES IN PAVED AREAS AND EASEMENTS. PROVIDE TRACER WIRE AND MARKER AT GRADE LEVEL FOR FUTURE LOCATING.

1.14 CONTRACTOR SHALL BE RESPONSIBLE FOR FINANCIAL REIMBURSEMENT TO THE OWNER AND ENGINEER FOR THE FOLLOWING ADDITIONAL ENGINEERING SERVICES SHOULD THEY OCCUR, AND SUCH A/E DESIGN SERVICES WILL BE DEDUCTED FROM CONTRACTOR'S FINAL PAYMENTS BY THE OWNER.

A. REINSPECTION, COORDINATION AND EXTRA TESTING OR RETESTING COSTS INCURRED BECAUSE OF IMPROPER OR FAULTY CONSTRUCTION. ONE TIME TESTING AND INSPECTION IS PROVIDED FOR BY THE OWNER. ALL OTHER TESTING IS THE CONTRACTOR'S RESPONSIBILITY.

B. ADDITIONAL STAKING NOT INCLUDED IN CONTRACT OR RESTAKING AS REQUESTED BY CONTRACTOR.

C. CHANGES AND SUBSTITUTIONS IN MATERIALS CONSTRUCTION METHODS, REQUESTED BY THE CONTRACTOR, THAT MUST BE REVIEWED, RECALCULATED OR APPROVED BY ENGINEER.

D. ENGINEERING DESIGN SERVICES REQUESTED BY THE CONTRACTOR OR CAUSED BY ERRORS OR OMISSIONS BY THE CONTRACTOR.

E. ANY ENGINEERING DESIGN APPROVED BY OTHERS AND SUBMITTED FOR REVIEW. THESE SHALL BEAR THE SEAL OF AN ENGINEER REGISTERED IN ARIZONA.

ANY DIFFERENCE BETWEEN PLANS AND SPECIFICATIONS AND QUESTIONS AS TO THEIR MEANING SHALL BE DETERMINED PRIOR TO AWARD OF THE CONTRACT AND SHALL BE INTERPRETED BY THE ENGINEER. THE GENERAL INTENT AND MEANING OF THE PLANS AND SPECIFICATIONS WILL GOVERN AND SHALL NOT WARRANT ANY ADDITIONAL COMPENSATION TO THE CONTRACTOR. THE ENGINEER WILL PROVIDE FULL INSTRUCTIONS WHEN DISCREPANCIES ARE DISCOVERED IN THE DOCUMENTS.

1.16 THE CONTRACTOR SHALL BE RESPONSIBLE FOR VERIFYING THE LIMITS OF THE WORK AREA FOR ALL PHASES OF THE WORK PRIOR TO BEGINNING CONSTRUCTION OF THOSE PHASES. ALL CONSTRUCTION LIMITS, AREAS OF WORK, SETBACKS, PERIMETERS, ADJACENT PROPERTY LINES, BOUNDARIES, AND OTHER CRITERIA DEFINING THE LIMITS OF THE CONTRACTOR'S WORK AREA AND LIMITS, SHALL BE STAKED BY THE CONTRACTOR'S SURVEYOR PRIOR TO CONSTRUCTION OR CLEARING OF THE SITE. THE CONTRACTOR SHALL BE RESPONSIBLE FOR FAMILIARIZING HIMSELF WITH THE EXTENT OF WORK TO BE DONE IN EACH SEPARATE PHASE OF THE PROJECT, AND ANY WORK NECESSARY IN INACTIVE PHASES REQUIRED TO DEEM THE ACTIVE PHASES FINISHED, SAFE, AND SERVICEABLE.

1.17 THE CONTRACTOR OR SUBCONTRACTORS SHALL NOT DEVIATE FROM THESE PLANS OR MAKE FIELD CHANGES WITHOUT REQUESTING THE ENGINEER TO PROVIDE, IN WRITING, THE APPROVAL OF THESE MODIFICATIONS. ANY CHANGES MADE WITHOUT APPROVAL OF THE DESIGN ENGINEER ARE SUBJECT TO REMOVAL AT THE EXPENSE OF THE CONTRACTOR.

1.18 THE DESIGN ENGINEER RESERVES THE RIGHT TO MAKE MINOR FIELD MODIFICATIONS TO GRADES AND STRUCTURE DESIGNS TO ACCOMMODATE FIELD CONDITIONS FOUND ON SITE. THIS INCLUDES BUT IS NOT LIMITED TO MINOR MODIFICATIONS TO GRADE, ALIGNMENT, SLOPE OR STRUCTURE LOCATIONS. THE ENGINEER SHALL HAVE THE RIGHT TO MAKE SUCH CHANGES IN WRITING IN THE LOCATION AND QUANTITIES OF WORK AS MAY BE DEEMED ADVISABLE.

1.19 NO JOB WILL BE CONSIDERED COMPLETE UNTIL FINE GRADING IS COMPLETE AND ALL CURBS, PAVEMENT AND SIDEWALKS HAVE BEEN SWEPT CLEAN OF ALL DIRT AND DEBRIS, ALL SURVEY MONUMENTS ARE INSTALLED AND ALL VALVES, MANHOLES AND BOXES HAVE BEEN ADJUSTED ACCORDING TO THE PLANS AND STANDARD DETAILS.

1.20 EXISTING GRADES INDICATED ON PLANS ARE BASED ON PREGRADING CONDITIONS. LOSSES IN MATERIAL DUE TO SHRINKAGE OF MATERIAL, DEMOLITION OF EXISTING SITE FEATURES, CLEARING AND GRUBBING OF THE SITE SHALL BE INCLUDED IN CONTRACTOR'S BID.

1.21 SHOP DRAWINGS SHALL BE PROVIDED BY THE CONTRACTOR PER MAG SECTION 105.2.

2 PERMITS

2.1 CONTRACTOR SHALL OBTAIN ALL PERMITS AT HIS OWN EXPENSE FROM LOCAL MUNICIPAL AND AIR POLLUTION CONTROL AUTHORITIES PRIOR TO BEGINNING CONSTRUCTION.

2.2 REQUIRED PERMITS SHALL BE SECURED BY THE CONTRACTOR FROM THE APPROPRIATE AGENCIES. A.D.O.T. REQUIRES THAT A PERMIT BE ISSUED FROM THEIR OFFICE FOR ANY WORK WITHIN STATE RIGHT-OF-WAY. FEDERAL PERMITS, UTILITY CO. AND OTHER PERMITS MAY BE REQUIRED. A.D.E.Q. REQUIRES PERMITS BE ISSUED PRIOR TO NEW CONSTRUCTION, EXTENSION TO, OR MODIFICATION OF WATER DISTRIBUTION SYSTEM, SEWAGE COLLECTION OR INDIVIDUAL SEWAGE TREATMENT SYSTEM. A RIGHT-OF-WAY PERMIT, ISSUED BY THE TOWN, IS REQUIRED FOR ANY EXCAVATION OR GRADING (INCLUDING PLACEMENT OF FILL). PRIOR TO CONSTRUCTION THE APPROPRIATE AGENCIES SHALL BE NOTIFIED BY THE CONTRACTOR AS REQUIRED BY THE PERMITS.

2.3 THE CONTRACTOR SHALL BE RESPONSIBLE FOR OBTAINING AT HIS OWN EXPENSE ALL APPROPRIATE INSURANCE FORMS FOR PERMIT REQUIREMENTS.

2.4 IT SHALL BE THE RESPONSIBILITY OF THE CONTRACTOR TO ARRANGE FOR THE RELOCATION AND RELOCATION COSTS, IF ANY, OF ALL UTILITIES, AND SUBMIT A UTILITY RELOCATION SCHEDULE TO THE MUNICIPALITY AND DESIGN ENGINEER PRIOR TO CONSTRUCTION. ALL PUBLIC UTILITY EQUIPMENT POLES, BOXES, STRUCTURES AND MUNICIPAL UTILITY COMPANY EQUIPMENT SHALL BE RELOCATED BY THE APPROPRIATE UTILITY COMPANY OR MUNICIPALITY BEFORE ANY WORK IS STARTED.

3 APPROVALS

3.1 THE CONTRACTOR IS TO USE ONLY THAT OFFICIAL CONSTRUCTION SET OF DRAWINGS WHICH CONTAINS THE APPROVAL OF THE GOVERNMENT AGENCY/UTILITY SIGNED ON THE COVER SHEET OF THE PLANS. THE CONTRACTOR SHALL NOT PLACE BIDS OR START CONSTRUCTION ON A SET OF DRAWINGS UNSIGNED BY THE GOVERNMENT AGENCY AND/OR MARKED "NOT FOR CONSTRUCTION".

4 RECORD DRAWINGS

4.1 IT IS THE RESPONSIBILITY OF THE CONTRACTOR TO PROVIDE AND KEEP AN UPDATED RECORD SET OF AS-BUILT INFORMATION DRAWINGS IN GOOD CONDITION ON THE JOB SITE AND PROVIDE THE DESIGN ENGINEER AT COMPLETION OF THE WORK, WITH THE RECORD SET SHOWING FIELD VERIFIED LOCATIONS OF ALL VALVES, BOXES, MANHOLES, UTILITY POLES, PIPE SLEEVES, UTILITY ENCASEMENT AND OTHER UTILITY LINES AND EQUIPMENT ABOVE AND BELOW GROUND WHICH THE CONTRACTOR ENCOUNTERS AND INSTALLS IN HIS AREA OF WORK.

4.2 ACCEPTANCE OF THE COMPLETED PAVING, GRADING OR UTILITY INSTALLATION WILL NOT BE GIVEN UNTIL REPRODUCIBLE AS-BUILT PLANS HAVE BEEN SUBMITTED BY THE ENGINEER AND APPROVED BY THE LOCAL GOVERNING AGENCY.

5 OBSERVATION

5.1 ALL MATERIALS USED AND ALL WORK DONE BY THE CONTRACTOR SHALL BE SUBJECT AT ALL TIMES TO THE INSPECTION, TESTING AND APPROVAL OF THE ENGINEER AND GOVERNING AGENCY. SPECIAL INSPECTION AND TESTING SERVICES SHALL BE PROVIDED AT THE OWNER'S EXPENSE, AS REQUIRED BY THE TOWN ENGINEER.

5.2 THE CONTRACTOR SHALL CONTACT THE APPROPRIATE PUBLIC UTILITY COMPANIES FOR INSPECTION OF TRENCHING, BEDDING AND BACKFILLING DONE IN CONJUNCTION WITH INSTALLATION OF THOSE UTILITIES ON THIS PROJECT.

5.3 SUBMITTAL OF AN ENGINEER'S CERTIFICATE OF COMPLETION IS REQUIRED BY A.D.E.Q. FOR ALL WATER AND SEWER SYSTEM CONSTRUCTION. RELATED INSPECTION AND TESTING SHALL BE PROVIDED BY THE OWNER'S ENGINEER AT THE OWNER'S EXPENSE.

5.4 SOILS COMPACTION TEST RESULTS MUST BE SUBMITTED TO THE ENGINEER'S OFFICE FOR ALL FILL MATERIAL FOR ROADS, TRENCH BACKFILL AND SITE FILL MATERIALS UNDER SLABS AND STRUCTURES. NO FILL MATERIALS SHALL BE PLACED WITHOUT TESTING DURING PLACEMENT. NO EARTH MATERIAL SHALL BE PLACED WITHOUT APPROVAL OF THE PREVIOUS LIFTS. THE CONTRACTOR SHALL SUBMIT ALL TEST RESULTS TO THE DESIGN ENGINEER AND GOVERNMENTAL AGENCIES.

5.5 CONTRACTOR SHALL SUBMIT A SCHEDULE, APPROVED IN WRITING BY A QUALIFIED CONSULTING TESTING AGENCY, FOR FREQUENCY, LOCATION AND TYPE OF ALL PROJECT TESTING. THE CONTRACTOR WILL BE RESPONSIBLE FOR SCHEDULING AND COORDINATION OF ALL TESTING INCLUDING THE FOLLOWING ITEMS WHICH SHALL BE TESTED IN ACCORDANCE WITH MAG SPECIFICATIONS...

1. SUBGRADE COMPACTION
2. BASE COURSE COMPACTION
3. ASPHALT PAVEMENT MIX DESIGN QUALITY
4. CONCRETE STRENGTH
5. TRENCH BEDDING AND BACKFILL
6. TESTING FOR UTILITIES, PIPING AND DRAINAGE SYSTEMS

5.6 THE TOWN SHALL BE NOTIFIED BY THE CONTRACTOR 24 HOURS PRIOR TO BEGINNING DIFFERENT PHASES OF CONSTRUCTION SO THAT CITY INSPECTIONS MAY BE SCHEDULED.

6 FINAL ACCEPTANCE

6.1 FINAL ACCEPTANCE OF THE CONSTRUCTION, BY THE TOWN ENGINEER, IS REQUIRED BEFORE RELEASING OF A PERMIT AND OR TRANSFERRING OWNERSHIP OF THE IMPROVEMENTS TO THE CITY.

6.2 APPROVAL OF A PORTION OF THE WORK IN PROGRESS DOES NOT GUARANTEE ITS FINAL ACCEPTANCE. TESTING AND EVALUATION MAY CONTINUE UNTIL WRITTEN FINAL ACCEPTANCE OF A COMPLETE WORKABLE UNIT. ACCEPTANCE OF COMPLETED IMPROVEMENTS WILL NOT BE GIVEN UNTIL DEFECTIVE OR UNAUTHORIZED WORK IS REMOVED, AND FINAL CLEANUP IS COMPLETE.

7 UTILITIES

7.1 A UTILITY COORDINATION MEETING SHALL BE COORDINATED BY THE CONTRACTOR PRIOR TO THE START OF ANY WORK. ALL UTILITY ISSUES SHALL BE ADDRESSED IN ACCORDANCE WITH MAG SECTION 105.6.

7.2 LOCATION OF UNDERGROUND UTILITIES SHALL BE ACCOMPLISHED IN ACCORDANCE WITH ARS 40-360.22 PRIOR TO ANY EXCAVATION. BLUE STAKE SHALL BE CALLED AT 1-800-STAKE-IT FOR ACCURATE LOCATION OF UTILITIES AS NECESSARY AND PRIOR TO ANY EXCAVATION. UTILITIES IF INDICATED ON PLANS ARE APPROXIMATE LOCATIONS ONLY, TAKEN FROM THE UTILITY COMPANY MAPS. IF THE CONTRACTOR ENCOUNTERS ANY LINES NOT INDICATED ON THE DRAWINGS OR MARKED IN THE FIELD BY THE UTILITY COMPANY THAT MAY INTERFERE WITH HIS WORK, HE SHALL NOTIFY THE APPROPRIATE UTILITY COMPANY IMMEDIATELY FOR DISPOSITION OF THOSE FACILITIES.

7.3 THE CONTRACTOR IS RESPONSIBLE FOR PREPARATION OF GRADE, TRENCHING, BACKFILLING, PAD CONSTRUCTION AND CONCRETE PADS FOR UTILITY EQUIPMENT INSTALLED ON THIS PROJECT. CONTRACTOR SHALL CONTACT LOCAL UTILITY COMPANIES FOR DETAILS AND REQUIREMENTS.

7.4 UTILITIES MUST BE LOCATED TO MINIMIZE INTERFERENCE WITH ONE ANOTHER, TO PROVIDE REQUIRED HORIZONTAL AND VERTICAL SEPARATIONS, AND TO PROVIDE MAINTENANCE ACCESS WITHOUT VIOLATING EASEMENT BOUNDARIES. SEPARATION BETWEEN UTILITIES PER MAG STANDARD

7.5 ALL UTILITY SLEEVES SHALL BE PLACED PRIOR TO SUBBASE CONSTRUCTION AND PAVING. CONTACT APPROPRIATE UTILITY COMPANIES FOR REQUIREMENTS IN ALL AREAS.

7.6 ALL WATER MAINS, APPURTENANCES, AND INSTALLATION SHALL CONFORM TO A.W.W.A. STANDARDS AND ARIZONA DEPARTMENT OF ENVIRONMENTAL QUALITY, AND TOWN OF JEROME REQUIREMENTS. WATER SYSTEM SHALL BE TESTED PER A.D.E.Q. BULLETIN NO. 10 TO THE APPROPRIATE A.W.W.A. STANDARDS.

7.7 ALL FIRE HYDRANTS SHALL MEET ALL REQUIREMENTS OF A.W.W.A. C-509-80 AND TOWN OF JEROME REQUIREMENTS.

8 CONSTRUCTION STAKING

8.1 THE ACCURACY OF ALL CONSTRUCTION WORK SHALL BE MAINTAINED AND VERIFIED BY THE OWNER'S SURVEYOR AT THE OWNER'S EXPENSE BY PROVIDING CONSTRUCTION STAKING SUITABLE TO THE TOWN ENGINEER. STAKES WILL BE SET ESTABLISHING LINES AND GRADES (FINISH OR FLOWLINE) FOR ALL CONSTRUCTION INCLUDING ROADS, CURB AND GUTTER, SIDEWALKS, UTILITIES, STRUCTURES, AND OTHER WORK AS CONSIDERED NECESSARY BY THE ENGINEER. ALL SURVEY CONTROL SHALL BE SET BY THE OWNER'S SURVEYOR FROM MONUMENTS ACCEPTABLE TO THE ENGINEER.

9 GRADING AND EARTHWORK

9.1 PERFORM ALL EARTHWORK GRADING, CUTTING AND FILLING AS PER THE PROJECT SOILS REPORT* AND ALL ADDENDA. ALL WORK TO BE COORDINATED AS PER THE SWPPP.

9.2 NO GRADING OR TRENCHING WORK SHALL BEGIN PRIOR TO SUPPORTING AND PROTECTING EXISTING ONSITE AND ADJACENT PROPERTY FROM SETTLING, CRACKING, OR OTHER DAMAGE WHICH MIGHT RESULT. CONTRACTOR SHALL VERIFY FROM SOILS REPORT RECOMMENDATIONS THE DEGREE OF DIFFICULTY REQUIRED FOR TRENCHING AND EXCAVATION WORK BASED ON DEPTH AND TYPES OF MATERIALS TO BE ENCOUNTERED.

9.3 WATER SOURCE: THE CONTRACTOR SHALL MAKE THE NECESSARY ARRANGEMENTS FOR OBTAINING ALL WATER REQUIRED FOR SOIL COMPACTION, DRINKING PURPOSES AND DUST CONTROL. (MAG SPEC 225)

9.4 CLEARING AND GRUBBING: EXAMINE SITE AND PROVIDE NECESSARY EQUIPMENT AND LABOR TO REMOVE FROM THE SITE AND DISPOSE OF STUMPS, ROOTS, ROCKS, LOOSE FILL, VEGETATION, DEBRIS, AND ANY OTHER OBJECTIONABLE MATERIALS FROM THE BUILDING AND FILL AREAS. CLEAN, UNCLASSIFIED ONSITE SOILS MAY BE USED IN GENERAL AS FILL MATERIAL. SEE MAG SPECIFICATION SECTIONS 201 AND 215.

9.5 TOPSOIL THAT WILL BE AFFECTED BY ROUGH GRADING OR EXCAVATION SHALL BE STOCKPILED ON THE SITE SEPARATELY AND SHALL NOT BE USED FOR FILL, BUT SHALL BE CONSERVED AND USED FOR FINE AND FINISH GRADING.

9.6 SITE DRAINAGE: CONSTRUCTION OF ALL SWALES, CHANNELS, DRAINAGE PIPES, DRAINAGE STRUCTURES AND BANK PROTECTION SHALL BE CONSTRUCTED DURING THE FIRST PHASES OF SITE CONSTRUCTION TO PROTECT ALL OTHER CONSTRUCTION FROM SURFACE WATERS. DIVERT RUN OFF WATER AROUND CONSTRUCTION OPERATIONS. CARE SHALL BE TAKEN BY THE CONTRACTOR NOT TO ADVERSELY AFFECT ADJACENT PROPERTIES. DRAIN EXCAVATIONS BY PUMPING OR OTHER SATISFACTORY METHOD TO PREVENT SOFTENING OF THE FOUNDATION SOILS, UNDERCUTTING OF FOOTINGS, OR OTHER ACTIONS DETRIMENTAL TO PROPER CONSTRUCTION PROCEDURES. ALL WORK TO BE COORDINATED AS PER THE SWPPP.

9.7 THE CONTRACTOR SHALL PROVIDE POSITIVE DRAINAGE AWAY FROM ALL WALLS AND FOUNDATIONS. ALL STORM DRAINS, DRAIN LINES, OVERFLOWS, OUTLETS, AND/OR OTHER DRAINAGE TYPE OUTLETS WHICH CONDUCT MOISTURE NEAR THE STRUCTURES SHALL BE POSITIVELY DRAINED AWAY FORM THE STRUCTURE. NO WATER SHALL BE PERMITTED TO POND NEAR STRUCTURES OR FOUNDATIONS. ALL DRAINAGE SHALL BE CHANNELED AND TAKEN A MINIMUM OF 10 FEET AWAY FROM ALL STRUCTURES.

9.8 SUBGRADE PREPARATION: IF THE NATURAL SUBGRADE IS LESS THAN THE REQUIRED DENSITY, IT SHALL BE SCARIFIED AND COMPACTED TO A MINIMUM DEPTH OF TWELVE INCHES OR AS NOTED IN THE SOILS REPORT IMMEDIATELY PRIOR TO PLACING SUBSEQUENT FILL MATERIAL THEREON. THE CONTRACTOR IS RESPONSIBLE FOR MAINTENANCE AND REPAIR OF DAMAGE TO PREPARED SUBGRADE CAUSED BY CONTRACTORS OPERATIONS OR PUBLIC TRAFFIC UNTIL ACCEPTANCE OF PROJECT. NO MATERIALS SHALL BE PLACED UPON THE PREPARED SUBGRADE UNTIL IT MEETS THE SPECIFIED REQUIREMENTS. ROADWAY SUBGRADE COMPACTION INCLUDES SUBGRADE UNDER ALL PAVEMENT, CURB, SIDEWALKS, SHOULDERS AND FILL SLOPES. SUBGRADE TOLERANCES SHALL BE AS SPECIFIED IN MAG SECTION 301. OPEN LANDSCAPED AREAS SHALL BE GRADED TO +/- 0.20 FEET.

9.9 EARTH FILL: AREAS TO BE FILLED SHALL BE LEVELED TO PROVIDE A LEVEL BASE TO SUPPORT FILL MATERIALS. SUBGRADE AND SUBBASE AREAS REQUIRING FILL MATERIAL SHALL BE SCARIFIED MOISTENED AND COMPACTED PRIOR TO PLACING FILL. ALL FILL, SUBGRADE AND SUBBASE MATERIALS SHALL BE COMPACTED TO SPECIFIED DENSITIES AT OR NEAR OPTIMUM MOISTURE CONTENTS AS VERIFIED AND RECOMMENDED BY THE SOILS ENGINEER. PLACE FILL IN HORIZONTAL LIFTS NOT EXCEEDING EIGHT INCHES IN LOOSE THICKNESS BEFORE COMPACTION. SLOPED SURFACES SHALL BE PLOWED, STEPPED, AND BENCHED SO THAT THE FILL MATERIAL WILL BOND WITH THE EXISTING MATERIAL. BENCH AT THE TOE OF FILL SLOPES AND PERIODIC INTERVALS UP THE FILL SLOPES BENCHES.

9.10 IT IS THE RESPONSIBILITY OF THE CONTRACTOR TO CONTACT THE TESTING COMPANY FOR SCHEDULING OF COMPACTION TESTING. THE FREQUENCY OF DENSITY AND MOISTURE TESTS REQUIRED FOR ADEQUATE CONTROL SHALL BE THE RESPONSIBILITY OF THE SOILS ENGINEER WHO SHALL CERTIFY TO THE ENGINEER AND CONTRACTOR AT PROJECT END THAT THE ROADBED FILL IS COMPACTED AS OUTLINED HEREIN. COMPACTION SHALL BE ACHIEVED BY MECHANICAL MEANS. IN NO CASE SHALL STRUCTURE BACKFILLING BE FLOOD WATER SETTLED.

9.11 ALL SLOPE CONSTRUCTION AND ROADWAY EXCAVATION SHALL CONFORM TO THE REQUIREMENTS OF MAG SPECIFICATIONS SECTIONS 201, 205, 211, 301, AND UBC SECTIONS 7009 AND 8010. CUT AND FILL SLOPES SHALL BE AS INDICATED ON THE DETAILS AND PLANS. CUT AND FILL SLOPE GRADIENTS SHALL NOT EXCEED 2:1 IN STEEPNESS WITHOUT WRITTEN AUTHORIZATION FROM THE SOILS ENGINEER AND EXAMINATION BY THE DESIGN ENGINEER. ALL SLOPE CONDITIONS SHALL BE PROVIDED WITH THE APPROPRIATE BENCHES AS SPECIFIED IN THE REFERENCE DOCUMENTS AND INDICATED ON THE PLANS. IF SOILS CONDITIONS ARE ENCOUNTERED WHICH DO NOT ALLOW THE ESTABLISHMENT OF THE INDICATED CUT OR FILL SLOPES, THE DESIGN ENGINEER AND SOILS ENGINEER SHALL BE CONTACTED IMMEDIATELY TO DETERMINE AN ADJUSTMENT TO THE SLOPE GRADIENT OR TO ESTABLISH A METHOD OF STABILIZATION ALL FILL SLOPES SHALL BE COMPACTED AS EACH LIFT OF FILL MATERIAL IS PLACED. ALL CUT AND FILL SLOPES SHALL BE UNIFORMLY GRADED TO LINES AND GRADES INDICATED. TOPS OF ALL CUT SLOPES SHALL BE ROUNDED AND ALL UNSTABLE AND LOOSE MATERIAL AT TOP OF SLOPE SHALL BE REMOVED. TOP OF CUT SLOPES OVER 10' HIGH SHALL BE PROVIDED WITH BROW DITCHES FOR DRAINAGE. ALL CUT AND FILL SLOPES SHALL BE REVEGETATED WITH A MIXTURE OF NATIVE GRASSES AND WILD FLOWER SEED OR AS SPECIFIED WITHIN THE LANDSCAPE PLANS. COMPACT ALL SHOULDERS AND BACKFILLS BEHIND ALL STRUCTURE AND WALLS.

9.12 COMPACT TO THE FOLLOWING SPECIFIED PERCENT OF MAXIMUM DENSITY AS DETERMINED IN ACCORDANCE WITH ASTM D698 AND MAG SECTION 211 OR AS DIRECTED IN THE SOILS REPORT.

MINIMUM PERCENT COMPACTION
SUBGRADE SOIL:
ROADWAY AND STRUCTURE AREAS----------95
PAVED AREAS (PAVEMENTS, SIDEWALKS, & PADS)---------95
EARTH FILL:
ROADWAY AND STRUCTURE AREAS----------95
PAVED AREAS (PAVEMENTS, SIDEWALKS, & PADS)---------95
GRASSED AND PLANTING AREAS----------85
AGGREGATE BASE COURSE----------100
BACKFILL AROUND STRUCTURES----------95
BACKFILL FOR UTILITY TRENCHES (PER MAG SECTION 601). PROVIDE TYPE 1 BACKFILL OR AS DIRECTED BY APPROPRIATE UTILITY REQUIREMENTS. BACKFILL FOR TRENCHES WITHIN 10' OF STRUCTURES AND WALLS SHALL BE COMPACTED TO 95% UNLESS DIRECTED OTHERWISE BY ENGINEER.

9.13 EXCAVATION: EXCAVATE TO THE DIMENSIONS AND DEPTHS INDICATED ON THE DRAWINGS. FOUNDATIONS SHALL REST ON ENGINEERED COMPACTED FILL OR UNDISTURBED NATURAL SOILS AT GRADE ELEVATIONS INDICATED. IF SUITABLE SOIL IS NOT REACHED AT THE DEPTHS INDICATED, THE CONTRACTOR SHALL IMMEDIATELY NOTIFY THE SOILS ENGINEER AND ENGINEER. THE CONTRACTOR WILL BE DIRECTED, IN WRITING, TO EXCAVATE TO THE DEPTH OF SUITABLE SOIL. EXCAVATION FOR FOUNDATIONS WHICH ARE CARRIED BELOW THE DEPTHS INDICATED SHALL HAVE THE CONCRETE EXTENDED TO THE BOTTOM OF THE EXCAVATION AT THE CONTRACTOR'S EXPENSE. SEE MAG SPECIFICATION SECTION 206.

9.14 WATERING: CAREFULLY WATER EARTH FILL DURING PLACING BY MEANS OF A FINE SPRAY OR OTHER APPROVED METHOD, SO THAT EACH LAYER IS THOROUGHLY AND UNIFORMLY WETTED. MOISTURE CONTENT OF THE MATERIAL SHALL BE CAREFULLY CONTROLLED AT ALL TIMES AND CHECKED AT PROPER INTERVALS TO INSURE CORRECT MOISTURE FOR COMPACTION SPECIFIED. SEE MAG SECTION 225 AND SOILS REPORT.

10 PAVING

10.1 COMPLETE ASPHALTIC CONCRETE PAVEMENT INSTALLATION SHALL INCLUDE BUT NOT BE LIMITED TO THE FOLLOWING:
A. TACK COATING OF ALL SURFACES, UNDILUTED .02 TO .10 GAL/SY, DILUTED 1:1 MIXTURE, .05 TO .15 GAL/SY, OR AS DIRECTED.
B. SEAL COATING: SEAL COATING WITHIN THE RIGHT-OF-WAY SHALL BE A FOG SEAL COAT.
C. PAINT FOR PAVEMENT STRIPING AND MARKING SHALL CONFORM TO FEDERAL SPEC. NO. TTP-155E, "PAINT, TRAFFIC, HIGHWAY, WHITE AND YELLOW". COLORS FOR PAVEMENT MARKING AND STRIPING SHALL BE AS SPECIFIED BY THE TOWN ENGINEER.
D. TRAFFIC CONTROL DEVICES: SIGNS AND PAVEMENT

11 FIELD INSPECTION

11.1 THE CONTRACTOR SHALL CAREFULLY PRESERVE ALL STAKES, REFERENCE AND CONTROL POINTS, ETC. AGAINST DESTRUCTION AND SHALL PROMPTLY NOTIFY THE ENGINEER OF ANY STAKES WHICH HAVE BEEN DISTURBED.

11.2 OWNER'S REGISTERED SURVEYOR SHALL BE NOTIFIED TWO WORKING DAYS (48 HOURS) MINIMUM PRIOR TO FIELD STAKING SCHEDULING.

11.3 ANY QUESTIONS RAISED RELATIVE TO ACCURACY OF IMPROVEMENT INSTALLATION SHALL NOT BE RAISED SUBSEQUENT TO COMPLETION OF THE WORK UNLESS ALL SURVEY STAKES ARE MAINTAINED INTACT. SHOULD SUCH STAKES NOT BE PRESENT AND VERIFIED AS TO THEIR ORIGIN, NO CLAIM FOR ADDITIONAL COMPENSATION FOR CORRECTION SHALL BE PRESENTED TO ANY PARTY AND SUCH WORK SHALL BE CORRECTED BY THE CONTRACTOR AT HIS EXPENSE.

12 SUSPENSION OF WORK

12.1 THE ENGINEER OR HIS AUTHORIZED REPRESENTATIVE MAY SUSPEND THE WORK BY WRITTEN NOTICE WHEN, IN HIS JUDGMENT, PROGRESS IS UNSATISFACTORY, WORK BEING DONE IS UNAUTHORIZED OR DEFECTIVE, WEATHER CONDITIONS ARE UNSUITABLE, OR THERE IS DANGER TO THE PUBLIC HEALTH OR SAFETY.

13 WARRANTY

13.1 ANY DEFECTS WHICH APPEAR IN THE WORK WITHIN TWO YEARS FROM THE DATE OF ACCEPTANCE AND WHICH ARE DUE TO IMPROPER WORKMANSHIP OR INFERIOR MATERIALS SUPPLIED SHALL BE CORRECTED BY OR AT THE EXPENSE OF THE CONTRACTOR.

14 EROSION CONTROL NOTES

(SPECIFICATIONS FOR PERMANENT SEEDING)

14.1 SITE PREPARATION
- A. INSTALL NECESSARY SURFACE WATER CONTROL MEASURES PRIOR TO PLANTING PERMANENT SEEDING.
- B. GRADE TO PERMIT USE OF CONVENTIONAL EQUIPMENT FOR SEEDBED PREPARATION.
- C. PROVIDE ADEQUATE DRAINAGE WHERE INTERNAL WATER MOVEMENT, ESPECIALLY AT TOES OF SLOPES, MAY CAUSE SEEPS OR SLIPPAGE BEFORE SEEDING IS WELL ESTABLISHED.

14.2 SEEDBED PREPARATION A. AS PRACTICAL, PERFORM ALL CULTURAL OPERATIONS AT RIGHT ANGLES TO THE SLOPE. B. IMMEDIATELY BEFORE SEEDING, RAKE OR OTHERWISE LOOSEN PLANTING SURFACE TO PROVIDE A SMOOTH, FRIABLE SURFACE FREE OF EARTH CLODS, HUMPS AND DEPRESSIONS, AND DISPOSE OF LOOSE STONES HAVING A DIMENSION GREATER THAN ONE INCH AND DEBRIS BROUGHT TO THE SURFACE DURING CULTIVATION.

14.3 PLANTING A. APPLY SEED MIX AT THE RATE OF 11 POUNDS PER ACRE. SHALL CONTAIN THE FOLLOWING PROPORTION OF PURE LIVE SEED: SAND DROPSEED (SPOROBOLUS CRYPTANDRUS) 1 LB SIDEOATS GRAMA (BOUTELOUS CURTIPENDULA)5 LB CRESTED WHEATGRASS (AGROPYRON CRISTATUM) 5 LB B. APPLY SEED IN TWO DIRECTIONS AT RIGHT ANGLES TO EACH OTHER WITH HALF THE SPECIFIED APPLICATION RATE APPLIED IN EACH DIRECTION. C. IMMEDIATELY AFTER SEEDING, UNIFORMLY SPREAD SCREENED MANURE AT THE RATE OF ONE CUBIC YARD PER 1000 SQUARE FEET AND WATER UNTIL THE GROUND IS WET TO A MINIMUM DEPTH OF TWO INCHES. D. HYDRAULIC SEEDING USING 1500 POUNDS OF WOOD CELLULOSE FIBER PER ACRE MAY BE UTILIZED IN LIEU OF PLANTING.

14.4 MAINTENANCE A. PROTECT PLANTED AREAS FROM GRAZING, FIRE, TRAFFIC, AND WEED GROWTH. B. MAINTAIN PLANTED AREAS UNTIL A GOOD STAND OF GRASS IS ESTABLISHED. AREAS AS REQUIRED IF NO GROWTH IS PRESENT WITHIN 15 DAYS OF PLANTING.

15 TEMPORARY EROSION CONTROL

15.1 EROSION CONTROL BERMS AND ROCK CHECK DAMS
- A. PROVIDE EARTHEN BERMS AT TOES OF SLOPES REMAINING BARE BETWEEN CONSTRUCTION PHASES.
- B. PLACE TEMPORARY ROCK CHECK DAMS IN ROAD DITCHES AND CHANNELS IF RIP-RAP PROTECTION WILL NOT BE PROVIDED WITHIN 60 DAYS.

15.2 CONTRACTOR SHALL BE RESPONSIBLE FOR PROVIDING EROSION CONTROL MEASURES SUCH AS SAND BAGGING, TEMPORARY DE-SILTING BASIN CONSTRUCTION BERMS, VISQUEEN, ETC. TO PROTECT ADJOINING PROPERTIES FROM EROSION.

16 GENERAL CONSTRUCTION NOTES

16.1 ALL CORRUGATED METAL PIPE TO BE 14 GAUGE, UNLESS OTHERWISE APPROVED BY THE DESIGN ENGINEER.

16.2 ALL CORRIGATED METAL PIPE SHALL HAVE FLARED END SECTIONS, EXCEPT WHERE HEADWALLS ARE USED.

16.3 ALL DRAINAGE CULVERTS AND PIPES SHALL HAVE A MINIMUM COVER OF 24" OR AS SPECIFIED.

16.4 ADDITIONAL CARE SHALL BE TAKEN TO PROTECT ALL CMP DURING CONSTRUCTION.

16.5 RETAINING WALLS SHALL BEAR ONTO NATURAL BEDROCK, OR COMPACTED SOIL WHICH HAS A BEARING VALUE OF 3,000 P.S.F. VERIFICATION OF SAID BEARING VALUE TO BE PROVIDED BY THE SOILS ENGINEER.

16.6 RIPRAP MATERIAL SHALL BE AS SPECIFIED TO A DEPTH OF TWICE THE SIZE OF Dso UNDER LAYING A FILLER LAYER OF Dso =3/4" TO A DEPTH OF 10" OR GEOTEXTILES. THE GRADATION OF RIPRAP SHOULD FOLLOW A SMOOTH CURVE. THE RATIO TO THE LARGEST SIZE ROCK TO Dso SHOULD BE EQUAL TO OR LESS THAN 2 (Dso/Dso ~0.5). THE RIPRAP SHOULD BE HARD, DENSE, DURABLE AND RESISTANT TO WEATHER AND FRACTURE. ALL RIPRAP TO BE HAND PLACED IN AN INTERLOCKING POSITION. FILLER MATERIAL TO BE WELL GRADED GRAVEL AS SPECIFIED. MATERIAL FURNISHED FOR RIPRAP SHALL CONFORM TO MAG SPEC 220.2.

16.7 ALL CONCRETE AND REBAR PLACEMENT PER MAG SPEC 505.

16.8 CONCRETE TESTING PER MAG SPEC 725.

16.9 ALL CONCRETE TO BE CLASS B (2500PSI) IF NOT SPECIFIED.

16.10 MINIMUM COVER ON ALL REBAR TO BE MIN 1" UNLESS OTHERWISE SPECIFIED.

16.11 MINIMUM LAP AT REBAR SPLICES TO BE 1' UNLESS OTHERWISE SPECIFIED.

16.12 ALL MANHOLE FRAMES TO HAVE 12" ANCHORS SPACED A MINIMUM OF 12" RADIALLY AROUND FRAME.

16.13 CONCRETE FOR FOOTINGS AND PADS AHALL BE CLASS A (3000 PSI)

SURVEY

1. TOPOGRAPHIC SURVEY BY KENNEY AERIAL MAPPING, INC., PHOENIX, AZ, DATED NOVEMBER 2022 AND SUPPLEMENTED IN FEBRUARY 2023. ADDITIONAL TOPOGRAPHIC SURVEY DATA PERFORMED BY SEC, INC. COORDINATES ARE RELATIVE TO NAD 83, AZ STATE PLANE CENTRAL ZONE, INTERNATIONAL FEET. ELEVATIONS RELATIVE TO NAVD 83. SURVEY CONTROL ON SHEET C2.0.

TREE NOTES

1. ALL EXISTING TREES AND SHRUBS NOT AFFECTED BY BUILDING CONSTRUCTION OR ROAD DEVELOPMENT MUST BE FENCED WITH A CONSTRUCTION ENVELOPE FENCE TO PROTECT THEM DURING CONSTRUCTION

2. NO TREES TO BE PLACED OVER/ON SEWER LINE

ADEQ WATER AND SEWER SYSTEM NOTES

MANHOLES

ALL MANHOLES SHALL BE 4-FT. ID PRECAST CONCRETE WITH POURED-IN-PLACE CONCRETE BASE AND TRAFFIC BEARING RING AND COVER. ALL COVERS SHALL BE 2-FT. IN DIAMETER AND SHALL BE MARKED "SEWER". TEST MANHOLES FOR WATER TIGHTNESS (INFILTRATION) PER R 18-9-E301.4.01.D.3.F. WATER TIGHTNESS SHALL BE TESTED BY EITHER 1) FILLING THE MANHOLE WITH WATER AND ENSURING THAT THE DROP IN WATER LEVEL DOES NOT EXCEED 0.0034 OF THE TOTAL MANHOLE VOLUME PER HOUR, OR 2) AIR PRESSURE TESTING USING THE "STANDARD TEST METHOD FOR CONCRETE SEWER MANHOLES BY NEGATIVE AIR PRESSURE (VACUUM) TEST", ASTM C1244-02a1 (2002). TEST 100% OF ALL MANHOLES. MANHOLES SHALL CONFORM TO A.D.E.Q. AND M.A.G. SPECIFICATIONS. CONSTRUCTION SHALL CONFORM TO M.A.G. STD. DTLS. 420-1 AND 420-2.'

CONCRETE

CLASS A CONCRETE SHALL HAVE A MINIMUM 28 DAY COMPRESSIVE STRENGTH OF 2000 PSI.

PIPE

GRAVITY SEWER PIPE SHALL BE PVC, SDR-26 AND CONFORM TO ASTM D-1784 AND ASTM D-3034. SEALS SHALL CONFORM TO ASTM F-477. PIPE SHALL BE JOINED BY BELL AND SPIGOT TYPE JOINTS. FITTINGS SHALL CONFORM TO ASTM D-3212. GRAVITY SEWER PIPE SHALL BE TESTED FOR DEFLECTION AND LEAKAGE. SHORT TERM DEFLECTION TESTING SHALL BE PERFORMED AFTER COMPLETE BACKFILL BUT PRIOR TO INSTALLATION OF FINISH SURFACE MATERIAL. A SHORT TERM DEFLECTION IN EXCESS OF 5% SHALL BE CONSIDERED UNACCEPTABLE AND PIPE SHALL BE REPAIRED, OR REPLACED AND RETESTED. A MINIMUM OF 100% OF GRAVITY SEWER SHALL BE DEFLECTION TESTED. SEWER PIPE SHALL BE TESTED FOR LEAKAGE USING LOW PRESSURE AIR TESTING PER "STANDARD TEST METHOD FOR INSTALLATION ACCEPTANCE OF PLASTIC GRAVITY SEWER LINES USING LOW PRESSURE AIR", ASTM F 1417-92, REAPPROVED 1998. TEST 100% OF ALL SEWER LINES. TEST THE TOTAL LENGTH OF THE SEWER LINE FOR UNIFORM SLOPE BY LAMP LIGHTING, REMOTE CAMERA OR SIMILAR METHOD APPROVED BY ADEQ AND RECORD THE RESULTS.

DUCTILE IRON PIPE SHALL BE AWWA C-150, CLASS 350 AND SHALL BE TESTED FOR LEAKAGE PER AWWA STANDARD C-600.

A MINIMUM HORIZONTAL DISTANCE OF 6-FT SHALL BE MAINTAINED BETWEEN MAINS AND GRAVITY SEWERS.

MATERIAL

ALL MATERIALS & PRODUCTS THAT COME INTO CONTACT WITH DRINKING WATER OR DRINKING WATER TREATMENT CHEMICALS MUST COMPLY WITH AWWA STANDARDS & NSF STANDARD 61. ANY 'OR EQUAL' SUBSTITUTION SHALL ALSO MEET NSF STANDARD 61.

ALL MATERIALS USED IN THE INSTALLATION OF WATER MAINS SHALL BE PURSUANT TO AAC R-18-4-119, & SHALL BE NSF APPROVED FOR POTABLE WATER.

DISINFECTION

WATER MAINS. SHALL BE DISINFECTED IN ACCORDANCE WITH ADEQ ENGINEERING BULLETIN NO.8 "DISINFECTION OF WATER SYSTEMS".

TESTING

ONE HUNDRED PERCENT (100%) OF PIPE LINES SHALL BE PRESSURE AND LEAK TESTED IN ACCORDANCE WITH AWWA C-600, SECTION 4 AND MAG SECTION 611. MINIMUM TEST PRESSURES SHALL BE 200 PSI PLUS ALLOWANCE FOR WATER HAMMER.

AFTER PRESSURE AND LEAK TESTING IS SHOWN TO BE SATISFACTORY, WATER LINES SHALL BE DISINFECTED BY CHLORINATION IN ACCORDANCE WITH AWWA C-601, MAG SECTION 610.15, AND ADEQ BULLETIN 8. ALL VALVES SHALL BE WORKED INTERMITTENTLY FOR A PERIOD OF 24 HOURS FOLLOWING CHLORINATION.

WATER SYSTEM THRUST BLOCKING AND/OR JOINT RESTRAINT

PIPE LINES SHALL BE PROVIDED WITH CONCRETE THRUST BLOCKS AT ALL CHANGES IN DIRECTION AND SIZE AND AT ALL TEES, VALVES, PLUGS, AND DEAD ENDS, PER MAG STANDARD DETAILS 301 AND 380 AND YAG STANDARD DETAIL 3-03. PIPE LINES MAY ALSO BE PROVIDED WITH RESTRAINED JOINTS AT ALL CHANGES IN DIRECTION AND SIZE AND AT ALL TEES, VALVES, PLUGS, AND DEAD ENDS, PER MAG STANDARD DETAILS 302 AND 303.

ADEQ WATER & SEWER NOTES (CONT.)

TRENCHING AND BACKFILLING

ROUGH GRADING SHALL BE COMPLETED PRIOR TO INSTALLATION OF UNDERGROUND UTILITIES.

TRENCH BOTTOM SHALL BE COMPACTED BY SUITABLE MEANS APPROVED BY THE ENGINEER PRIOR TO PLACEMENT OF BEDDING MATERIAL. BEDDING MATERIAL SHALL BE PLACED TO PROVIDE UNIFORM AND ADEQUATE LONGITUDINAL SUPPORT UNDER THE PIPE. THE CONTRACTOR SHALL ENSURE THAT A MINIMUM COMPACTED DEPTH OF 6" IS MAINTAINED UNDERNEATH THE PIPE. BELL HOLES SHOULD BE PROVIDED AT EACH JOINT TO PERMIT PROPER ASSEMBLY WHILE MAINTAINING UNIFORM SUPPORT.

BEDDING MATERIAL SHALL BE ROUNDED GRAVEL WITH A MAXIMUM PARTICLE SIZE OF 1 1/2" AND SHALL BE NON-PLASTIC. WHERE DEPTH OF COVER IS 2-FT. OR LESS, BACKFILL MATERIAL SHALL BE ROUNDED GRAVEL WITH A MAXIMUM PARTICLE SIZE OF 4" AND WITH NO MORE THAN 20% PASSING THE #200 SIEVE.

BACKFILL SHALL BE PLACED IN LAYERS OF NOT MORE THAN 8" LOOSE DEPTH AND COMPACTED TO ACHIEVE COMPACTION OF 95% OF THE MAXIMUM DENSITY AS DETERMINED BY AASHTO T-99 AND T-191 OR ASTM D-2922 AND D-3017. THE CONTRACTOR SHALL CONTRACT WITH AN INDEPENDENT TESTING LABORATORY TO PROVIDED COMPACTION TESTING. TESTS SHALL BE PROVIDED AT MINIMUM INTERVALS OF ONE TEST PER 50 CUBIC YARDS OF TRENCH BACKFILL. TEST RESULTS SHALL BE SUBMITTED DAILY TO THE ENGINEER.

TRENCHING, PIPELAYING, BACKFILLING, AND ALL OTHER CONSTRUCTION SHALL BE PERFORMED UNDER THE INSPECTION, COORDINATION, AND SUPERVISION OF A REGISTERED PROFESSIONAL CIVIL ENGINEER.

NO TRENCH SHALL BE FILLED WITH BEDDING MATERIAL OR BACKFILL UNTIL THE EXCAVATION AND PIPE LAYING, RESPECTIVELY, HAVE BEEN APPROVED BY THE OWNER OR HIS AUTHORIZED REPRESENTATIVE.

THE EXCAVATION METHOD EMPLOYED SHALL BE THE CONTRACTOR'S OPTION. MATERIAL SHALL NOT BE STOCKPILED TO A DEPTH OF MORE THAN 5 FEET ABOVE FINISHED GRADE WITHIN 25 FEET OF ANY EXCAVATION OR STRUCTURE. EXCAVATION SHALL EXTEND SUFFICIENT DISTANCE FROM WALLS AND FOOTINGS TO ALLOW PLACING AND REMOVAL OF FORMS, INSTALLATION OF SERVICES AND INSPECTION BY THE ENGINEER. WITHIN 12" OF FINISHED GRADE SHOWN ON THE DRAWINGS, AND FOR THE MANHOLES, FILL AND BACKFILL SHALL BE NATIVE MATERIAL, FEE FROM BROKEN CONCRETE, ORGANIC MATERIAL, OR OTHER DEBRIS WITH SUFFICIENT FINES TO FILL ALL VOIDS AND TO INSURE A UNIFORMLY COMPACTED MASS OF THE REQUIRED DENSITY AND HAVING A MAXIMUM SIZE OF 2 - ½ INCHES WITH 0 TO 20% MINUS #200. ALL FILL AND BACKFILL SHALL BE PLACED IN LAYERS OF NOT MORE THAN 8" LOOSE AND COMPACTED TO 95% OF MAXIMUM DENSITY, DETERMINED BY AASHTO TEST METHOD T-99, PRIOR TO PLACEMENT OF THE NEXT LAYER.

WATER AND SEWER SYSTEM DESIGN: MINIMUM DESIGN CRITERIA

WATER AND SEWER MAINS SHALL BE SEPARATED IN ORDER TO PROTECT PUBLIC WATER SYSTEMS FROM POSSIBLE CONTAMINATION. ALL DISTANCES ARE MEASURED PERPENDICULARLY FROM THE OUTSIDE OF THE SEWER MAIN TO THE OUTSIDE OF THE WATER MAIN. SEPARATION REQUIREMENTS ARE AS FOLLOWS:
1. A WATER MAIN SHALL NOT BE PLACED:
A. WITHIN SIX FEET, HORIZONTAL DISTANCE, AND BELOW TWO FEET, VERTICAL DISTANCE, ABOVE THE TOP OF A SEWER MAIN UNLESS EXTRA PROTECTION IS PROVIDED. EXTRA PROTECTION SHALL CONSIST OF CONSTRUCTING THE SEWER MAIN WITH MECHANICAL JOINT DUCTILE IRON PIPE OR WITH SLIP-JOINT DUCTILE IRON PIPE IF JOINT RESTRAINT IS PROVIDED. ALTERNATE EXTRA PROTECTION SHALL CONSIST OF ENCASING BOTH THE WATER AND SEWER MAINS IN AT LEAST SIX INCHES OF CONCRETE FOR AT LEAST TEN FEET BEYOND THE AREA COVERED BY THIS SUBPARAGRAPH.
B. WITHIN TWO FEET HORIZONTALLY AND TWO FEET BELOW THE SEWER MAIN.
2. NO WATER PIPE SHALL PASS THROUGH OR COME INTO CONTACT WITH ANY PART OF A SEWER MANHOLE. THE MINIMUM HORIZONTAL SEPARATION BETWEEN WATER MAINS AND MANHOLES SHALL BE SIX FEET, MEASURED FROM THE CENTER OF THE MANHOLE.
3. THE MINIMUM SEPARATION BETWEEN FORCE MAINS OR PRESSURE SEWERS AND WATER MAINS SHALL BE TWO FEET VERTICALLY AND SIX FEET HORIZONTALLY UNDER ALL CONDITIONS. WHERE A SEWER FORCE MAIN CROSSES ABOVE OR LESS THAN SIX FEET BELOW A WATER LINE, THE SEWER MAIN SHALL BE ENCASED IN AT LEAST SIX INCHES OF CONCRETE OR CONSTRUCTED USING MECHANICAL JOINT DUCTILE IRON PIPE FOR TEN FEET ON EITHER SIDE OF THE WATER MAIN.

TOPO FEATURES

- EXISTING SANITARY SEWER w/SIZE
- GUARDRAIL
- WASH
- RETAINING WALL
- DIRT ROAD
- PROPERTY LINE
- OVERHEAD POWER LINE w/POLE
- FENCE LINE
- UNKNOWN EXPOSED PIPE
- CULVERT
- MANHOLE
- AERIAL SURVEY PANEL PT
- SIGN
- POST
- GATE
- TREE OR BUSH

LEGEND
PROPOSED DEVELOPMENT

- CENTER LINE/BASE LINE
- RIP RAP
- FENCE
- GUARD RAIL
- SAFETY RAIL
- CULVERT
- DRAINAGE FLOWLINE
- RETAINING WALL
- SIGNS
- DRAINAGE FLOW DIRECTION

LEGEND
PROPOSED SANITARY SEWER

- PRESSURE SEWER MAIN
- GRAVITY SEWER MAIN
- SEWER MANHOLE
- SEWER CLEANOUT

LEGEND
PROPOSED WATER

- WATER MAIN
- WATER METER
- AIR RELEASE VALVE
- BLOW OFF VALVE
- GATE VALVE
- FIRE HYDRANT w/VALVE
- BACKFLOW PREVENTOR VALVE
- WELL
- IRRIGATION CONTROL VALVE
- PIPE END CAP

LEGEND
PROPOSED ELECTRIC/GAS/TV/TEL

- OVERHEAD POWER
- UNDERGROUND POWER
- GAS
- TELEPHONE
- COMMON UTILITIES (TV,TEL)
- TELEVISION
- UTILITY POLE
- TELEPHONE RISER
- CABLE T.V. RISER
- GAS METER
- ELECTRIC METER
- ELECTRIC TRANSFORMER
- GUY WIRE

ABBREVIATIONS

LF	LINEAR FEET
ADOT	ARIZONA DEPT. OF TRANSPORATION
ADEQ	ARIZONA DEPT. OF ENVIRONMENTAL QUALITY
MAG	MARICOPA ASSOCIATION OF GOVERNMENTS
MSD	MARICOPA ASSOCIATION OF GOVERNMENTS STANDARD DETAIL
MUTCD	MANUAL OF UNIFORM TRAFFIC CONTROL DEVICES
FF	FINISHED FLOOR ELEVATION
EG	EXISTING GRADE
FG	FINISHED GRADE
TW	FINISHED GRADE AT TOP BACK OF WALL
BW	FINISHED GRADE AT BOTTOM FACE OF WALL
INV	INVERT
FL	FLOW LINE
AB	AGGREGATE BASE COURSE
DG	DECOMPOSED GRANITE
ADA	AMERICANS WITH DISABILITIES ACT
ARV	AIR RELEASE VALVE
BOV	BLOW-OFF VALVE
PVI	POINT OF VERTICAL INTERSECTION
DIP	DUCTILE IRON PIPE
PVC	POLYVINYL CHLORIDE
FPVC	FUSIBLE POLYVINYL CHLORIDE
CMP	CORRUGATED METAL PIPE
HDPE	HIGH DENSITY POLYETHYLENE
EP OR EOP	EDGE OF PAVEMENT
SEC	SOUTHWESTERN ENVIRONMENTAL CONSULTANTS, INC
STA	STATION
TBD	TO BE DETERMINED
VC	VERTICAL CURVE
WWTP	WASTE WATER TREATMENT PLANT
NTS	NOT TO SCALE
SF	SQUARE FEET
EL OR ELEV	ELEVATION
GRD BRK	GRADE BREAK
CP	SURVEY CONTROL POINT
SW	SIDEWALK
CY	CUBIC YARDS

Item I.

NO	BY	DATE	REVISIONS	DATE	APP

Professional Engineer — CERTIFICATE NO. 49106 — KRISHAN GEVINDA GINIGE — 10/31/25 — REGISTERED — ARIZONA, U.S.A.

PREPARED BY:
DESIGNED BY:
DRAWN BY: MMW
CHECKED BY: KG
SCALE: AS SHOWN
DATE 10/31/25
JOB NO. 19-1101CE

TITLE: NOTES 2, LEGENDS, ABBREVIATIONS

JOB: JEROME WWTP — GRADING & UTILITIES PLANS — YAVAPAI COUNTY AZ

PREPARED BY:
SEC Inc.
SOUTHWESTERN ENVIRONMENTAL CONSULTANTS, INC
825 COVE PARKWAY
COTTONWOOD, AZ 86326
928-282-7787

SHEET
C1.1
8 OF 99 SHEETS

JOB NO. 19-1101CE

1372

SEC, Inc., All Rights Reserved. This document is protected under the United States Copyright Act. No part may be reproduced in any form or by any means or stored in a database or retrieval system, without the prior written permission of SEC, Inc. These plans/documents have been prepared using technical knowledge that would be applied by other qualified consultants who practice this same profession in the same area and at the same time. Efforts have been made to be as accurate as possible. However, plans/documents could contain unintentional technical inaccuracies, typographical errors or omissions. Users of these plans/documents should understand that it is highly probable that errors and omissions will occur in any plan/document preparation process.

S:\LAND PROJECTS 2004 ENGINEERING\19-1101CE JEROME WWTP\DWG\C3D\PLANS\NOTES_LEGENDS_DETAILS.DWG

S:\land projects 2004 Engineering\19-1101CE Jerome WWTP\DWG\C3D\Plans\XBGRAD-19-1101CE.dwgS:\LAND PROJECTS 2004 ENGINEERING\19-1101CE JEROME WWTP\DWG\C3D\PLANS\XBGRAD-19-1101CE.DWG

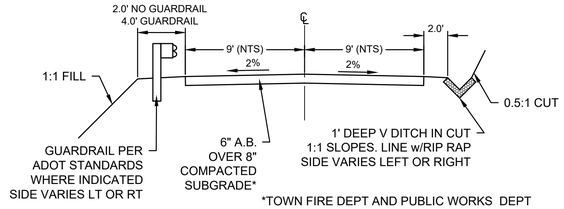

*TOWN FIRE DEPT AND PUBLIC WORKS DEPT HAVE APPROVED USING AB ROAD SURFACE

1 TYPICAL WWTP ACCESS ROAD
1"=6'

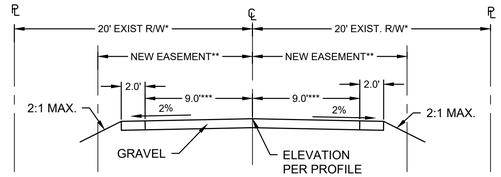

*NORTH DRIVE HAS 40' EXISTING RIGHT OF WAY
**NEW EASEMENT REQ'D. AT PRIVATE PROPERTY. WIDTH VARIES PER PLAN
***LANE WIDTH VARIES PER PLAN

2 TYPICAL NORTH DRIVE AND CEMETERY ACCESS RD
1"=6'

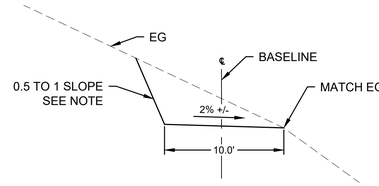

NOTE: 0.5 TO 1 SLOPE UPON APPROVAL BY GEOTECHNICAL ENGINEER

3 TYPICAL SEWER ACCESS ROAD SECTION
1"=6'

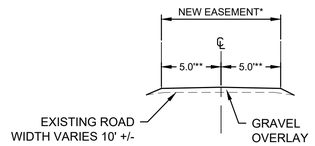

*NEW EASEMENT REQ'D. AT PRIVATE PROPERTY.
**PROVIDE MIN. 10' WIDE GRAVEL OVERLAY

4 TYPICAL CEMETERY RD THROUGH HISTORIC SITE
1"=6'

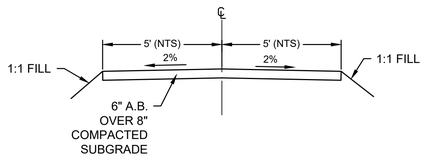

5 TYPICAL LOWER SITE ACCESS ROAD
1"=6'

NO	BY	DATE	REVISIONS	DATE	APP

Item I.

Professional Engineer
CERTIFICATE NO.
49109
KRISHAN GEVINDA GINIGE
10/31/25
DATE SIGNED
ARIZONA, U.S.A.

PREPARED BY:
DESIGNED BY:
DRAWN BY: NMW
CHECKED BY: KG
DATE 10/31/25
SCALE: AS SHOWN
JOB NO. 19-1101CE

TITLE
TYPICAL SECTIONS

JOB
JEROME WWTP
GRADING & UTILITIES PLANS
YAVAPAI COUNTY AZ

PREPARED BY:
SEC Inc.
SOUTHWESTERN ENVIRONMENTAL CONSULTANTS, INC
825 COVE PARKWAY
COTTONWOOD, AZ 86326
928-282-7787

SHEET
C1.2
9 OF 99 SHEETS

JOB NO. 19-1101CE
1373

© SEC, Inc., All Rights Reserved. This document is protected under the United States Copyright Act. No part may be reproduced in any form or by any means or stored in a database or retrieval system, without the prior written permission of SEC, Inc. However, plans/documents could contain unintentional technical inaccuracies, typographical errors or omissions. Users of these plans/documents should understand that it is highly probable that errors and omissions will occur in any plan/document preparation process.

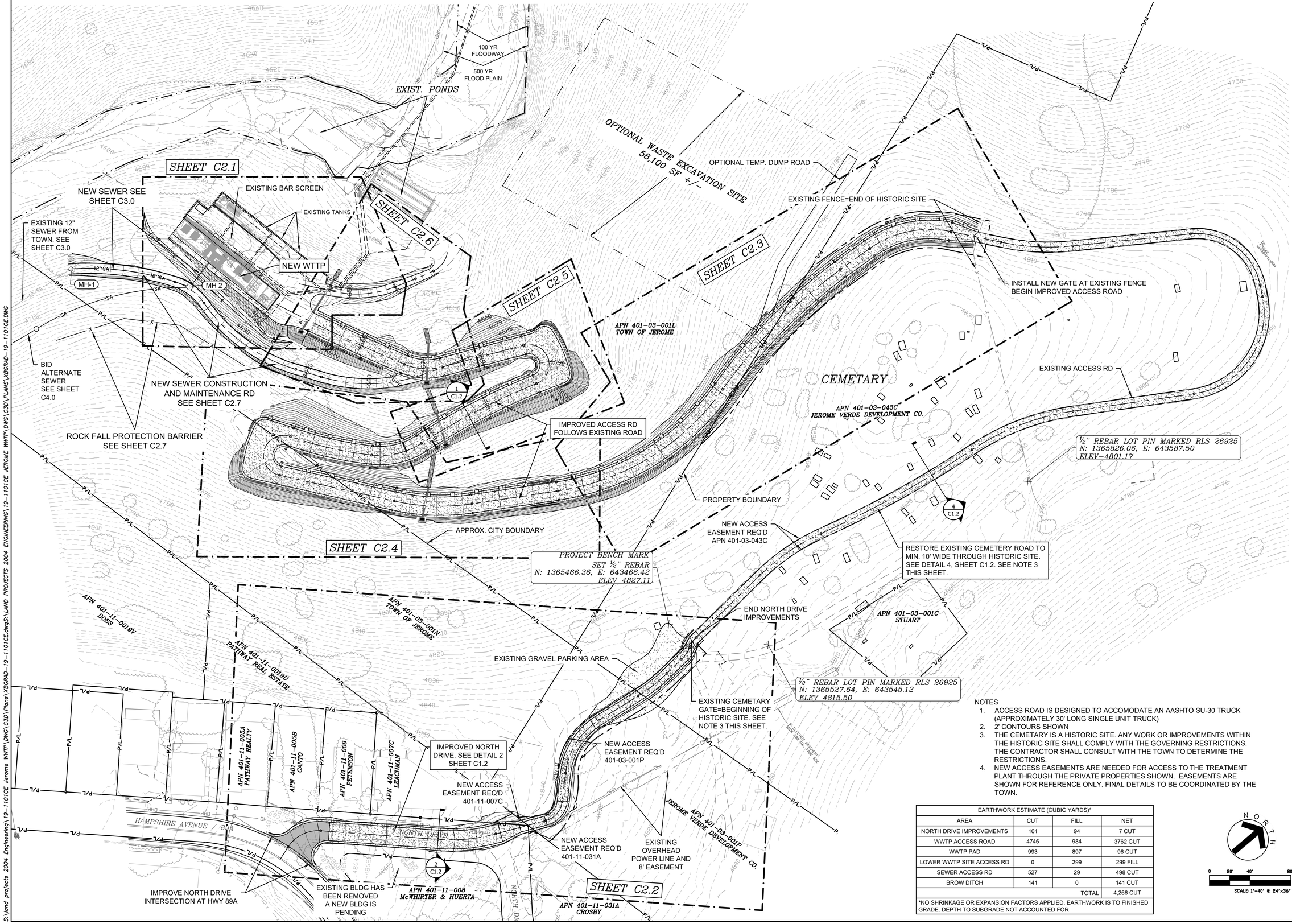

EARTHWORK ESTIMATE (CUBIC YARDS)*			
AREA	CUT	FILL	NET
NORTH DRIVE IMPROVEMENTS	101	94	7 CUT
WWTP ACCESS ROAD	4746	984	3762 CUT
WWTP PAD	993	897	96 CUT
LOWER WWTP SITE ACCESS RD	0	299	299 FILL
SEWER ACCESS RD	527	29	498 CUT
BROW DITCH	141	0	141 CUT
		TOTAL	4,266 CUT
*NO SHRINKAGE OR EXPANSION FACTORS APPLIED. EARTHWORK IS TO FINISHED GRADE. DEPTH TO SUBGRADE NOT ACCOUNTED FOR			

NOTES
1. ACCESS ROAD IS DESIGNED TO ACCOMODATE AN AASHTO SU-30 TRUCK (APPROXIMATELY 30' LONG SINGLE UNIT TRUCK)
2. 2' CONTOURS SHOWN
3. THE CEMETARY IS A HISTORIC SITE. ANY WORK OR IMPROVEMENTS WITHIN THE HISTORIC SITE SHALL COMPLY WITH THE GOVERNING RESTRICTIONS. THE CONTRACTOR SHALL CONSULT WITH THE TOWN TO DETERMINE THE RESTRICTIONS.
4. NEW ACCESS EASEMENTS ARE NEEDED FOR ACCESS TO THE TREATMENT PLANT THROUGH THE PRIVATE PROPERTIES SHOWN. EASEMENTS ARE SHOWN FOR REFERENCE ONLY. FINAL DETAILS TO BE COORDINATED BY THE TOWN.

NO	BY	DATE	REVISIONS	DATE	APP

Professional Engineer
CERTIFICATE NO. 49100
KRISHAN GEVINDA GINIGE
DATE SIGNED 10/31/25
ARIZONA, U.S.A.

PREPARED BY:
DESIGNED BY:
DRAWN BY: NMW
CHECKED BY: KG
SCALE: AS SHOWN
DATE: 10/31/25
JOB NO. 19-1101CE

TITLE: GRADING SITE MAP, SURVEY CONTROL

JOB: JEROME WWTP GRADING & UTILITIES PLANS — YAVAPAI COUNTY AZ

PREPARED BY:
SOUTHWESTERN ENVIRONMENTAL CONSULTANTS, INC
825 COVE PARKWAY
COTTONWOOD, AZ 86326
928-282-7787

SHEET
C2.0
10 OF 99 SHEETS

JOB NO. 19-1101CE

1374

SEC, Inc., All Rights Reserved. This document is protected under the United States Copyright Act. No part may be reproduced in any form or by any means or stored in a database or retrieval system, without the prior written permission of SEC, Inc. These plans/documents have been prepared using technical knowledge that would be applied by other qualified registrants who practice the same profession in the same area and at the same time. Efforts have been made to be as accurate as possible. However, plans/documents could contain unintentional technical inaccuracies, typographical errors or omissions. Users of these plans/documents should understand that it is highly probable that errors and omissions will occur in any plan/document preparation process.

S:\land projects 2004 Engineering\19-1101CE Jerome WWTP\DWG\C3D\Plans\XBGRAD-19-1101CE.dwgS:\LAND PROJECTS 2004 ENGINEERING\19-1101CE JEROME WWTP\DWG\C3D\PLANS\XBGRAD-19-1101CE.DWG

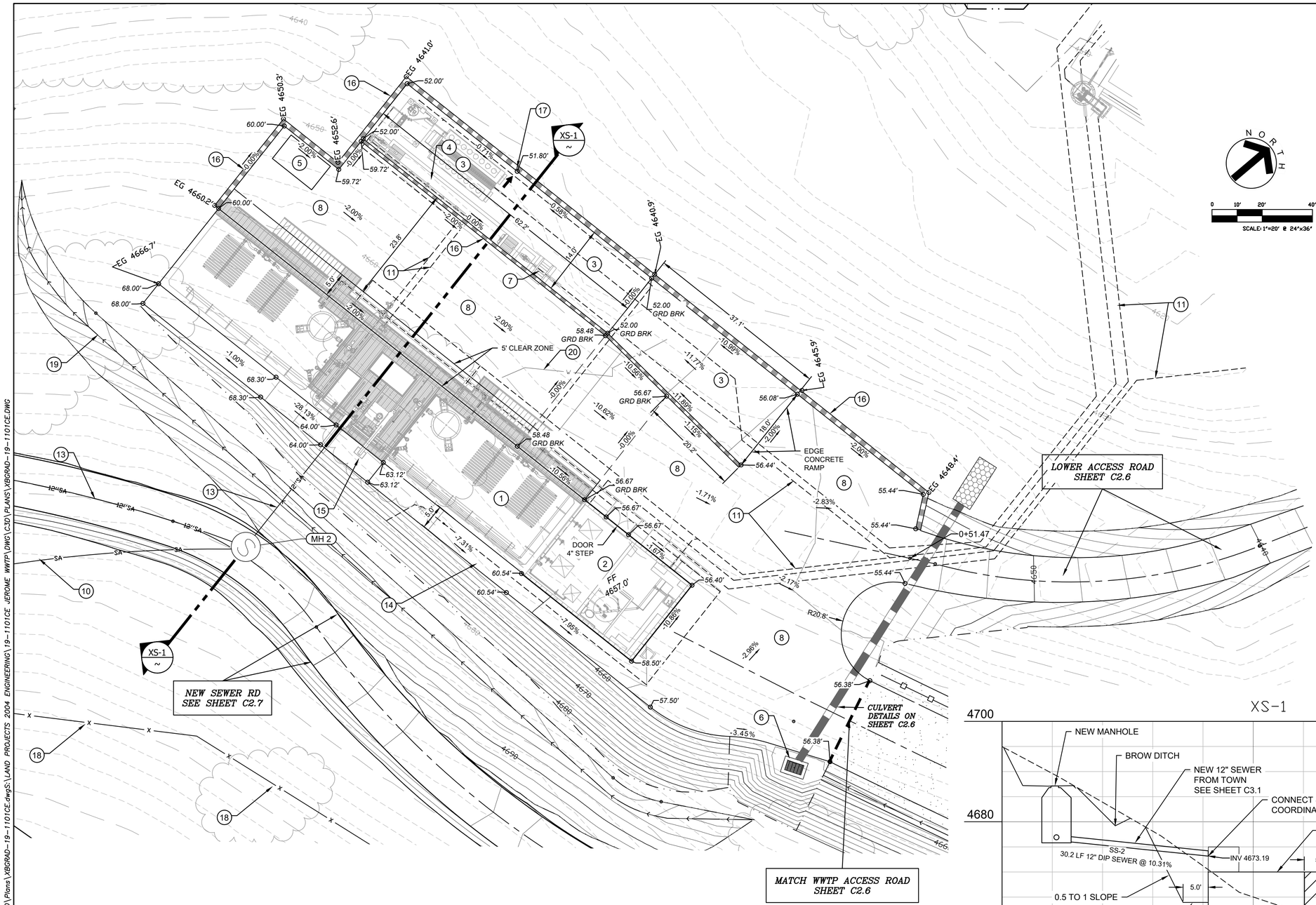

CALLOUTS-WWTP	
1	NEW WASTEWATER TREATMENT PLANT
2	BLOWER / OPERATOR BLDG PER WWTP PLANS
3	CONCRETE DUMPSTER PAD & RAMP FOR DEWATERING PER STRUCTURAL PLANS.
4	CHLORINE CONTACT PER WWTP PLANS
5	EMERGENCY BACKUP GENERATOR PER WWTP PLANS
6	CATCH BASIN & DRAIN PIPE. SEE SHEET C2.6
7	PROVIDE STAIRS & HANDRAILS TO DUMPSTER PAD PER WWTP PLANS
8	TREATEMENT PLANT PAD. 6" AB OVER 8" COMPACTED SUBGRADE.
9	NOT USED.
10	BID ALTERNATE SEWER. SEE SHEET C4.0
11	PIPING PER WWTP PLANS
12	EXISTING 12" SEWER FROM TOWN. SEE SHEET C3.0
13	NEW 12" SEWER FROM TOWN. SEE SHEET C3.0
14	PROVIDE 5' WIDE PATH FOR SCREENINGS REMOVAL HAND CART
15	PLANT SCREENINGS REMOVAL PER WWTP PLANS
16	RETAINING WALL. FG ELEVATIONS PER PLAN. DETAILS PER STRUCTURAL PLANS. PROVIDE SAFETY RAILS FOR PEDESTRIAN FALL PROTECTION. SEE NOTE 4.
17	GRADE DEWATERING PAD TO DRAIN TO WALL OPENING OR SCUPPER. DETAILS TO BE COORDINATED BY STRUCTURAL ENGINEER.
18	BID ALTERNATE: INSTALL BOULDER CATCH FENCE. SEE SHEET C2.7.
19	1.5' DEEP BROW DITCH
20	EXISTING PVC WATER LINE. TO BE REMOVED OR RELOCATED PER TREATMENT PLANT PLANS. SEE NOTE 3.

NOTES
1. RETAINING WALL FINISHED GRADE ELEVATIONS SHOWN. TOP OF WALL AND FOOTING ELEVATIONS PER STRUCTURAL DETAILS. BY OTHERS.
2. 2' CONTOURS SHOWN
3. REFER TO TREATMENT PLANT PLANS, NOTES AND SPECIFICATIONS FOR ADDITIONAL CONSTRUCTION REQUIREMENTS AND DETAILS. BY OTHERS.
4. ALL RETAINING WALLS SHALL HAVE SAFETY RAILS PER MSD 145 OR OTHER SIMILAR MEANS FOR PEDESTRIAN FALL PROTECTION. TO BE COORDINATED BY STRUCTURAL ENGINEER.
5. ALL DITCHES, PONDS, DRAINAGE FLOW PATHS SHALL BE LINED WITH RIP RAP TO A HEIGHT OF MIN DEPTH. RIP RAP NOT SHOWN FOR CLARITY.
6. ALL RIP RAP D50=6" x 12" DEEP w/GEOTEXTILE FABRIC UNDERLAY UNLESS OTHERWISE SPECIFIED.
7. ALL SLOPES STEEPER THAN 2:1 SHALL HAVE EROSION PROTECTION PER GEOTECHNICAL ENGINEER RECOMMENDATIONS.

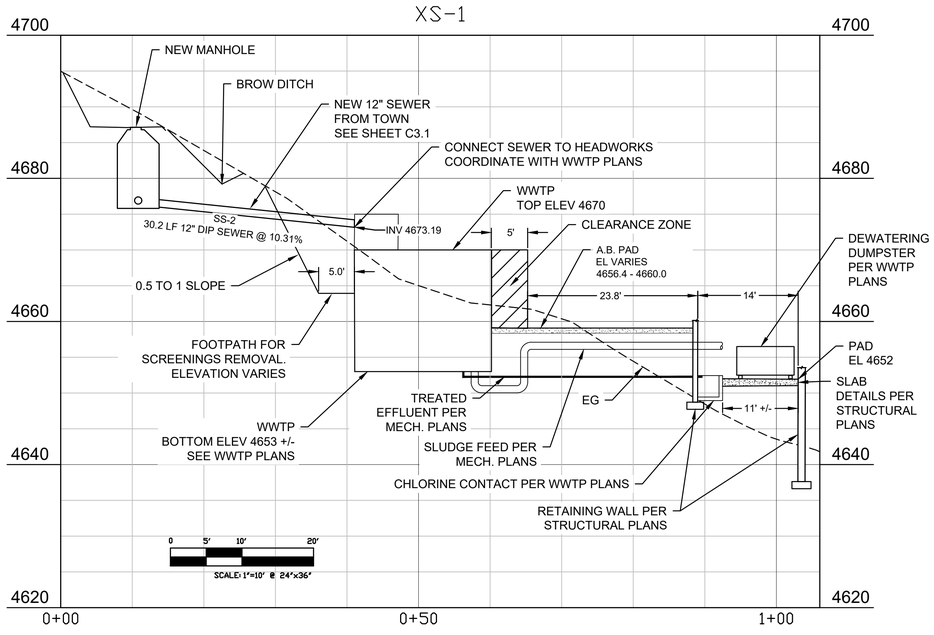

NO	BY	DATE	REVISIONS	DATE	APP

49106 KRISHAN GEVINDA GINIGE 10/31/25 REGISTERED ARIZONA, U.S.A. — Certificate No. Professional Engineer

PREPARED BY:
DESIGNED BY:
DRAWN BY: NMW
CHECKED BY: KG
SCALE: AS SHOWN
DATE: 10/31/25
JOB NO.: 19-1101CE

TITLE: WWTP SITE GRADING-10SC

JOB: JEROME WWTP GRADING & UTILITIES PLANS — YAVAPAI COUNTY AZ

PREPARED BY:
SOUTHWESTERN ENVIRONMENTAL CONSULTANTS, INC
825 COVE PARKWAY
COTTONWOOD, AZ 86326
928-282-7787

SHEET C2.1
11 OF 99 SHEETS

JOB NO. 19-1101CE 1375

SEC, Inc., All Rights Reserved. This document is protected under the United States Copyright Act. No part may be reproduced in any form or by any means or stored in a database or retrieval system, without the prior written permission of SEC, Inc. However, plans/documents could contain unintentional technical inaccuracies, typographical errors or omissions. Users of these plans/documents should understand that it is highly probable that errors and omissions will occur in any plan/document preparation process.

S:\land projects 2004 Engineering\19-1101CE Jerome WWTP\DWG\C3D\Plans\XBGRAD-19-1101CE.dwg S:\LAND PROJECTS 2004 ENGINEERING\19-1101CE JEROME WWTP\DWG\C3D\PLANS\XBGRAD-19-1101CE.DWG

MATCH SHEET C2.0

CALLOUTS-NORTH DRIVE	
1	INSTALL NEW WIDENED ROAD PER DETAIL 2, SHEET C1.2
2	REMOVE EXISTING TREE AS NEEDED TO ACCOMODATE NEW RADIUS AT HWY 89A
3	SAWCUT & REMOVE 2' ASPHALT FOR NEW CONCRETE CONSTRUCTION. REPLACE PER ADOT SPECS.
4	PROVIDE CONCRETE APRON AT CONNECTION TO HWY 89A. 6" CONCRETE OVER 6" AB. PROVIDE SINGLE MAT #4 BARS AT 18" OC BW, CENTERED IN SLAB. PROVIDE EXPANSION & CONTRACTION JOINTS PER ADOT STD DWG C-05.20.
5	MATCH EXISTING DRIVEWAY OR SIDE ROAD

NOTES
1. 2' CONTOURS SHOWN
2. A PERMIT IS REQUIRED FOR ALL WORK WITHIN ADOT RIGHT OF WAY.
3. NEW ACCESS EASEMENTS ARE REQUIRED AT PRIVATE PROPERTIES AS SHOWN IN THESE PLANS. SHOWN FOR REFERENCE ONLY. FINAL DETAILS TO BE COORDINATED BY THE TOWN.

BASELINE EXISTING CEMETERY ROAD
SEE SHEET C2.0

END NORTH DRIVE @ 5+25
BEGIN CEMETERY ROAD @ 15+22.53

EXISTING CEMETERY GATE

END=5+25
PT=5+21.64
4+85
R30.00'
PRC=5+09.33
PC=4+94.75
4+00
PT=4+75.51
R165.00'
PRC=4+39.57
R30.00'

BEGIN EXISTING GRAVEL PARKING AREA,
3+87 +/-

PT=3+54.20
4+00
R70.69'

EXISTING 8' POWER LINE ESMT

NEW ACCESS ESMT REQ'D
APN 401-03-001P

PC=3+30.83

BASELINE NORTH DRIVE

10'
PT=3+02.37
3+00
R22.00'
PRC=2+76.13
30' V.C.
R110.00'
PC=1+68.21
16'

TRANSITION LANE WIDTH FROM 9' TO 10'
STA 2+76.13 TO 3+02.37

USE 1:1 SLOPE AND/OR ADD WALL TO FIT NEW EASEMENT. PROVIDE SHOP DWG TO ENGINEER FOR APPROVAL PRIOR TO CONST.

NEW ACCESS EASEMENT REQ'D
APN 401-11-007C
185 SF +/-

0+60.84, 9.00' LT
FG=4868.29

0+25.64, 9.00' LT
FG=4874.10
PT=0+52.48
R30.00'
R20.00'
1+00
20' R/W
16.0'
2+00

0+14.34, 23.50' LT
FG=4876.52
PC=0+14.97
R16.00'
BEGIN=0+00
0+12.09, 34.29' RT
FG=4873.67

0+60.84, 9.00' RT
FG=4868.29

NEW ACCESS EASEMENT REQ'D
APN 401-11-031A
25 SF +/-

TRANSITION LANE WIDTH FROM 18' TO 9'
STA 2+30 TO 2+50

NOTE: THERE IS AN EXISTING WATER UTILITY IN THIS AREA. LOCATION AND DEPTH TBD AT TIME OF CONSTRUCTION

EXISTING BLDG HAS BEEN REMOVED
A NEW BLDG IS PENDING

APN 401-11-0019U
PATHWAY REAL ESTATE

APN 401-03-001N
TOWN OF JEROME

APN 401-11-005A
PATHWAY REALTY

APN 401-11-005B
CANTO

APN 401-11-006
PETERSON

APN 401-11-007C
LEACHMAN

APN 401-11-008
McWHIRTER & HUERTA

APN 401-11-031A
CROSBY

APN 401-03-001P
JEROME VERDE DEVELOPMENT CO.

N O R T H

0 10' 20' 40'
SCALE: 1"=20' @ 24"x36"

Profile View of NORTH DRIVE

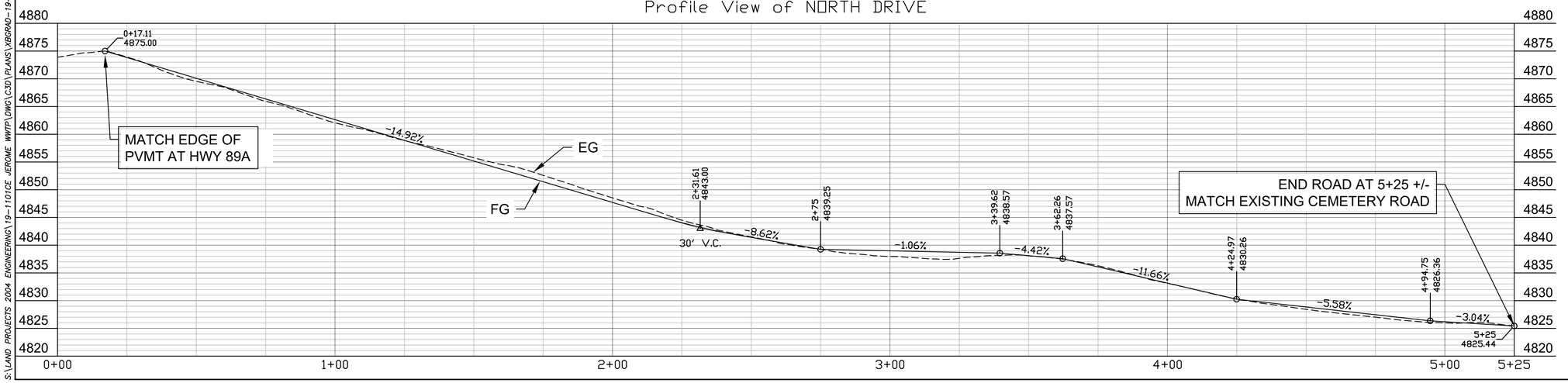

S:\LAND PROJECTS 2004 ENGINEERING\19-1101CE JEROME WWTP\DWG\C3D\PLANS\XBGRAD-19-1101CE.DWG

NO	BY	DATE	REVISIONS	DATE	APP

Professional Engineer
CERTIFICATE NO.
49106
KRISHAN GEVINDA GINIGE
10/31/25
DATE SIGNED
ARIZONA, U.S.A.

PREPARED BY:
DESIGNED BY:
DRAWN BY: NMW
CHECKED BY: KG
SCALE: AS SHOWN
DATE 10/31/25
JOB NO. 19-1101CE

TITLE
NORTH DR IMPROVEMENTS

JOB
JEROME WWTP
GRADING & UTILITIES PLANS
YAVAPAI COUNTY AZ

PREPARED BY:
SOUTHWESTERN ENVIRONMENTAL CONSULTANTS, INC
825 COVE PARKWAY
COTTONWOOD, AZ 86326
928-282-7787

SHEET
C2.2
12 OF 99 SHEETS

JOB NO. 19-1101CE
1376

Plans have been prepared using technical knowledge that would be applied by other qualified registrants who practice the same profession in the same area and at the same time. Efforts have been made to be as accurate as possible. However, plans/documents could contain unintentional technical inaccuracies, typographical errors or omissions. Users of these plans/documents should understand that it is highly probable that errors and omissions will occur in any plan/document preparation process.

© SEC, Inc., All Rights Reserved. This document is protected under the United States Copyright Act. No part may be reproduced in any form or by any means or stored in a database or retrieval system, without the prior written permission of SEC, Inc.

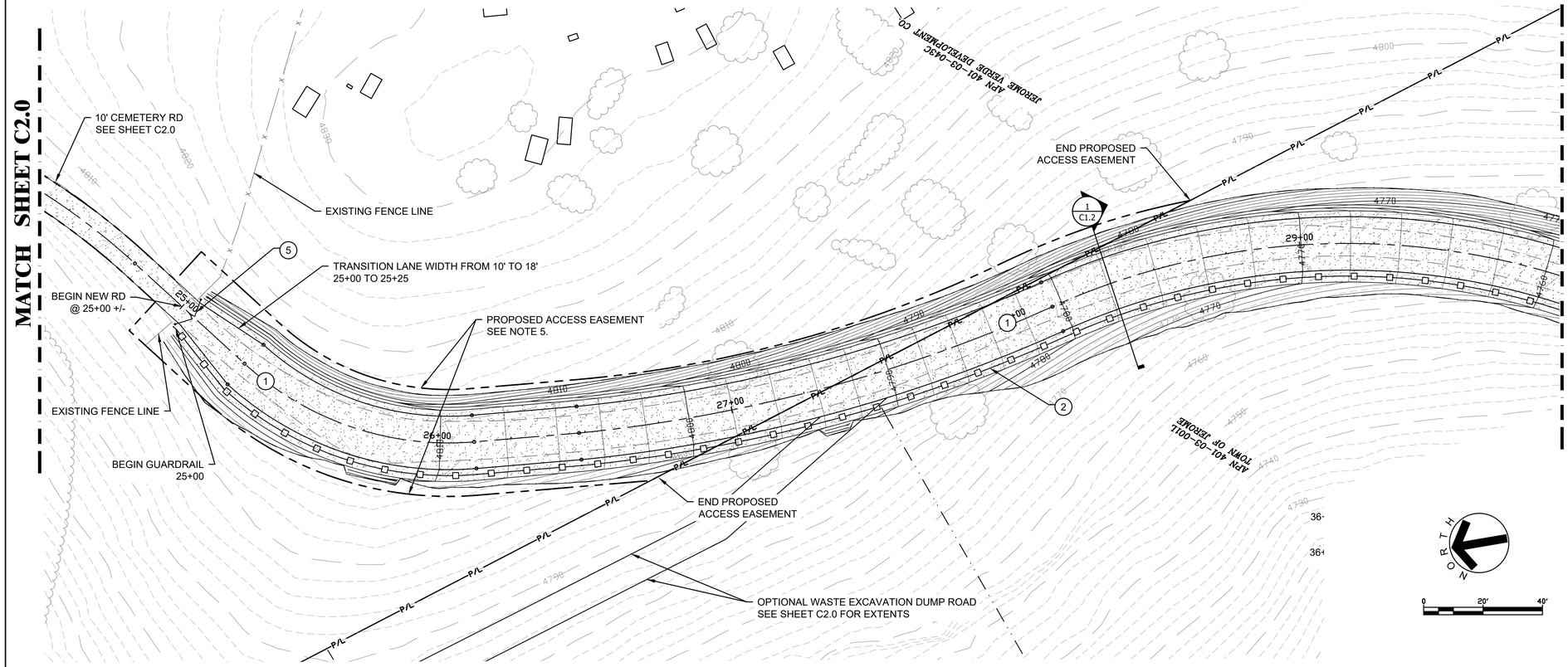

CALLOUTS-WWTP ACCESS RD	
1	INSTALL ACCESS ROAD PER DETAIL 1, SHEET C1.2
2	INSTALL GUARD RAIL PER ADOT STDS OR EQUAL
3	CATCH BASIN PER MSD 537, DOUBLE GRATE & 18" CMP. SEE PROFILE ON THIS SHEET
4	INSTALL 4' WIDE RIP RAP AT DRAIN PIPE OUTLET. SEE NOTE 2.
5	INSTALL 12' WIDE CHAIN LINK SWING GATE AT EXISTING FENCE LINE PER MSD 160 OR AS DIRECTED BY THE TOWN.

NOTES

1. THE CEMETARY IS A HISTORICAL SITE. ANY IMPROVEMENTS SHALL COMPLY WITH THE RESTRICTIONS FOR THE SITE. CONTRACTOR SHALL CONSULT WITH THE TOWN FOR DETAILS.
2. ALL RIP RAP SHALL BE D50=6" x 12" DEEP w/GEOTEXTILE FABRIC UNDERLAY UNLESS OTHERWISE INDICATED.
3. ALL SLOPES STEEPER THAN 2:1 SHALL HAVE EROSION PROTECTION PER GEOTECHNICAL ENGINEER RECOMMENDATIONS.
4. LINE ALL PONDS, DITCHES, DRAINAGE FLOW PATHS WITH RIP RAP TO HEIGHT=MIN. DEPTH. RIP RAP NOT SHOWN FOR CLARITY.
5. PROPOSED ACCESS EASEMENTS ARE REQUIRED THROUGH THE PRIVATE PROPERTIES SHOWN IN THESE PLANS. SHOWN FOR REFERENCE ONLY. FINAL DETAILS TO BE COORDINATED BY THE TOWN.

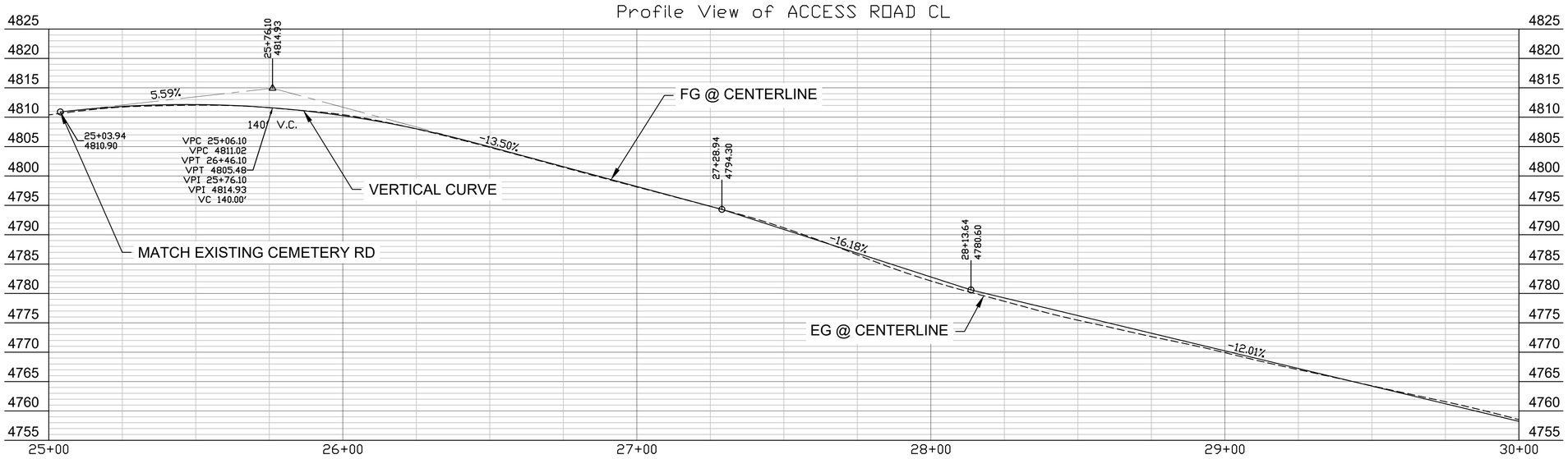

NO	BY	DATE	REVISIONS	DATE	APP



PREPARED BY:
DESIGNED BY:
DRAWN BY: NMW
CHECKED BY: KG
SCALE: AS SHOWN
DATE 10/31/25
JOB NO. 19-1101CE

TITLE
WWTP ACCESS RD P&P 25+00+TO 30+00
JEROME WWTP
GRADING & UTILITIES PLANS

JOB
YAVAPAI COUNTY AZ

PREPARED BY:
SEC Inc
SOUTHWESTERN ENVIRONMENTAL CONSULTANTS, INC
825 COVE PARKWAY
COTTONWOOD, AZ 86326
928-282-7787

SHEET
C2.3
13 OF 99 SHEETS

JOB NO. 19-1101CE
1377

SEC, Inc., All Rights Reserved. This document is protected under the United States Copyright Act. No part may be reproduced in any form or by any means or stored in a database or retrieval system, without the prior written permission of SEC, Inc. These plans/documents have been prepared using technical knowledge that would be applied by other qualified registrants who practice the same profession in the same area and at the same time. Efforts have been made to be as accurate as possible. However, plans/documents could contain unintentional technical inaccuracies, typographical errors or omissions. Users of these plans/documents should understand that it is highly probable that errors and omissions will occur in any plan/document preparation process.

S:\LAND PROJECTS 2004 ENGINEERING\19-1101CE JEROME WWTP\DWG\C3D\PLANS\XBGRAD-19-1101CE.DWG

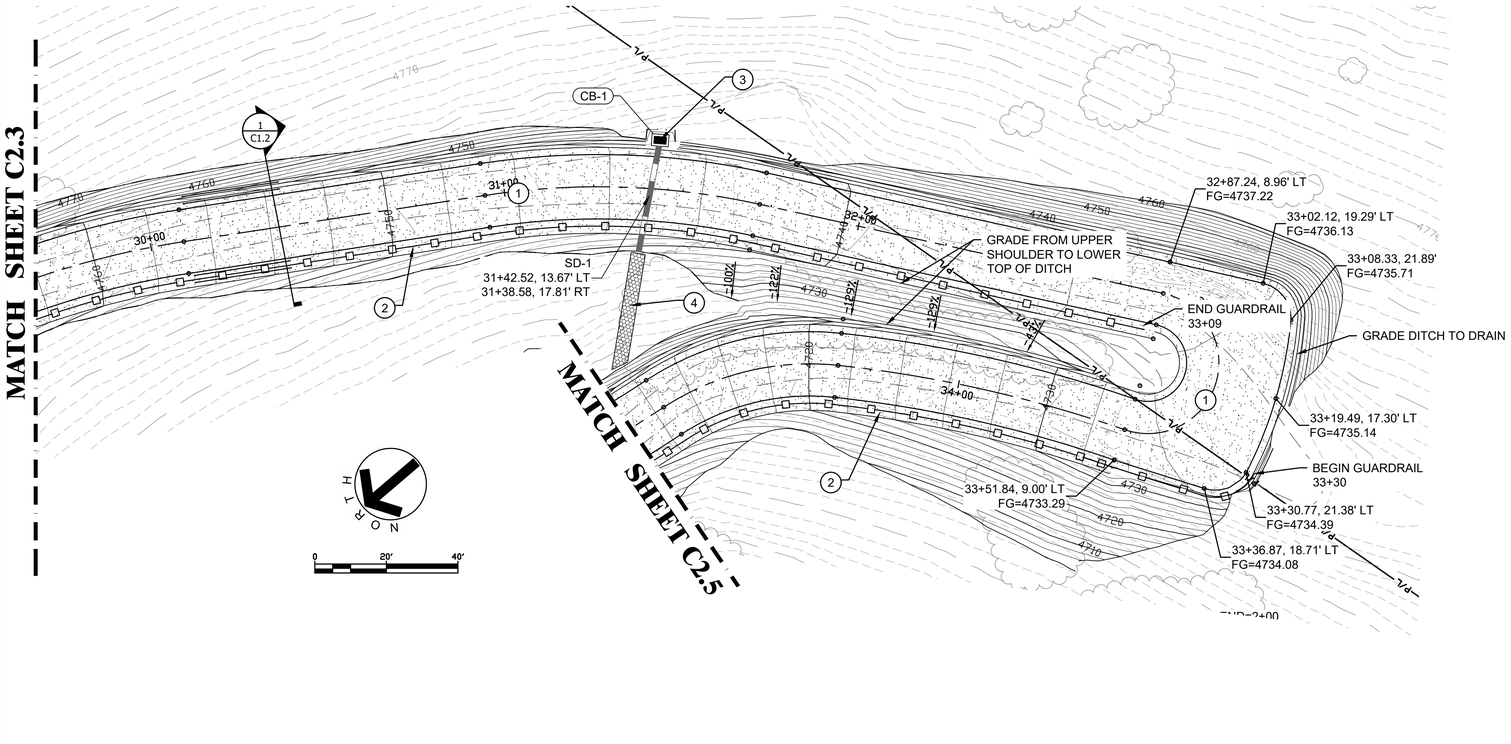

CALLOUTS-WWTP ACCESS RD	
1	INSTALL ACCESS ROAD PER DETAIL 1, SHEET C1.2
2	INSTALL GUARD RAIL PER ADOT STDS OR EQUAL
3	CATCH BASIN PER MSD 537, DOUBLE GRATE & 18" CMP. SEE PROFILE ON THIS SHEET
4	INSTALL 4' WIDE RIP RAP AT DRAIN PIPE OUTLET. SEE NOTE 2.
5	INSTALL 12' WIDE CHAIN LINK SWING GATE AT EXISTING FENCE LINE PER MSD 160 OR AS DIRECTED BY THE TOWN.

NOTES
1. THE CEMETARY IS A HISTORICAL SITE. ANY IMPROVEMENTS SHALL COMPLY WITH THE RESTRICTIONS FOR THE SITE. CONTRACTOR SHALL CONSULT WITH THE TOWN FOR DETAILS.
2. ALL RIP RAP SHALL BE D50=6" x 12" DEEP w/GEOTEXTILE FABRIC UNDERLAY UNLESS OTHERWISE INDICATED.
3. ALL SLOPES STEEPER THAN 2:1 SHALL HAVE EROSION PROTECTION PER GEOTECHNICAL ENGINEER RECOMMENDATIONS.
4. LINE ALL PONDS, DITCHES, DRAINAGE FLOW PATHS WITH RIP RAP TO HEIGHT=MIN. DEPTH. RIP RAP NOT SHOWN FOR CLARITY.
5. PROPOSED ACCESS EASEMENTS ARE REQUIRED THROUGH THE PRIVATE PROPERTIES SHOWN IN THESE PLANS. SHOWN FOR REFERENCE ONLY. FINAL DETAILS TO BE COORDINATED BY THE TOWN.

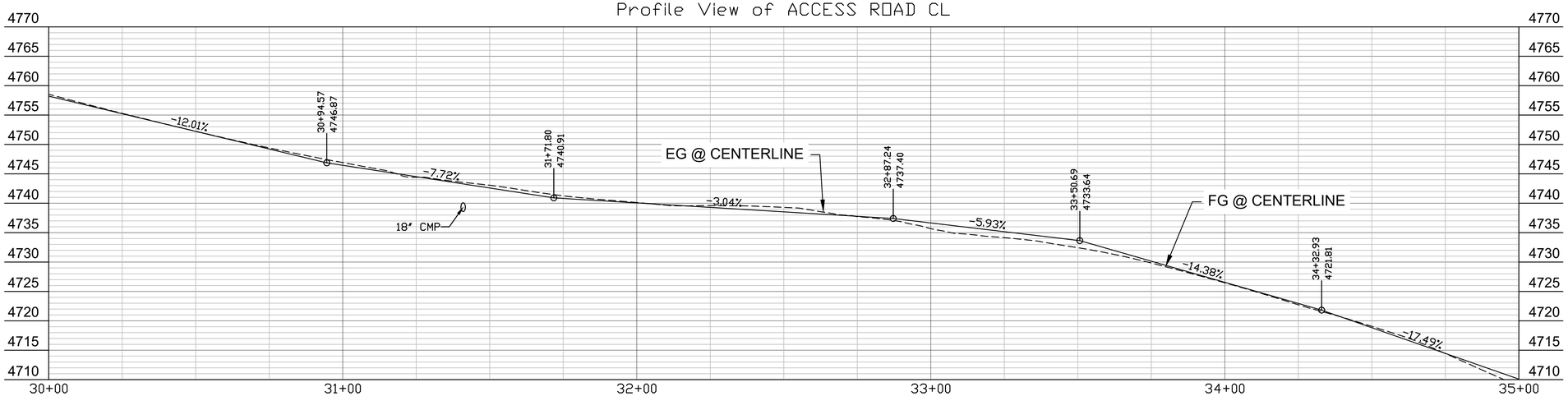

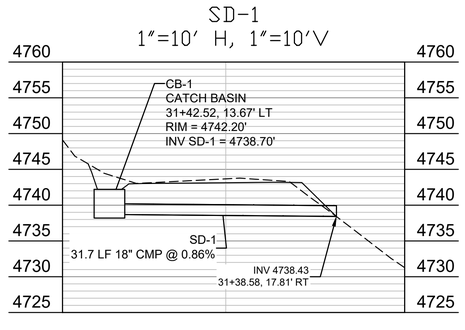

NO	BY	DATE	REVISIONS	DATE	APP

Professional Engineer
CERTIFICATE NO.
49106
KRISHAN GEVINDA GINIGE
10/31/25
DATE SIGNED
ARIZONA, U.S.A.

PREPARED BY:
DESIGNED BY:
DRAWN BY: NMW
CHECKED BY: KG
SCALE: AS SHOWN
DATE 10/31/25
JOB NO. 19-1101CE

TITLE
WWTP ACCESS RD P&P 30+00 TO 35+00

JOB
JEROME WWTP
GRADING & UTILITIES PLANS
YAVAPAI COUNTY AZ

PREPARED BY:
SOUTHWESTERN ENVIRONMENTAL CONSULTANTS, INC
825 COVE PARKWAY
COTTONWOOD, AZ 86326
928-282-7787

SHEET
C2.4
14 OF 99 SHEETS

JOB NO. 19-1101CE
1378

Copyright SEC, Inc. All Rights Reserved. This document is protected under the United States Copyright Act. No part may be reproduced in any form or by any means or stored in a database or retrieval system, without the prior written permission of SEC, Inc. These plans/documents have been prepared using technical knowledge that would be applied by other qualified registrants who practice the same profession in the same area and at the same time. Efforts have been made to be as accurate as possible. However, plans/documents could contain unintentional technical inaccuracies, typographical errors or omissions. Users of these plans/documents should understand that it is highly probable that errors and omissions will occur in any plan/document preparation process.

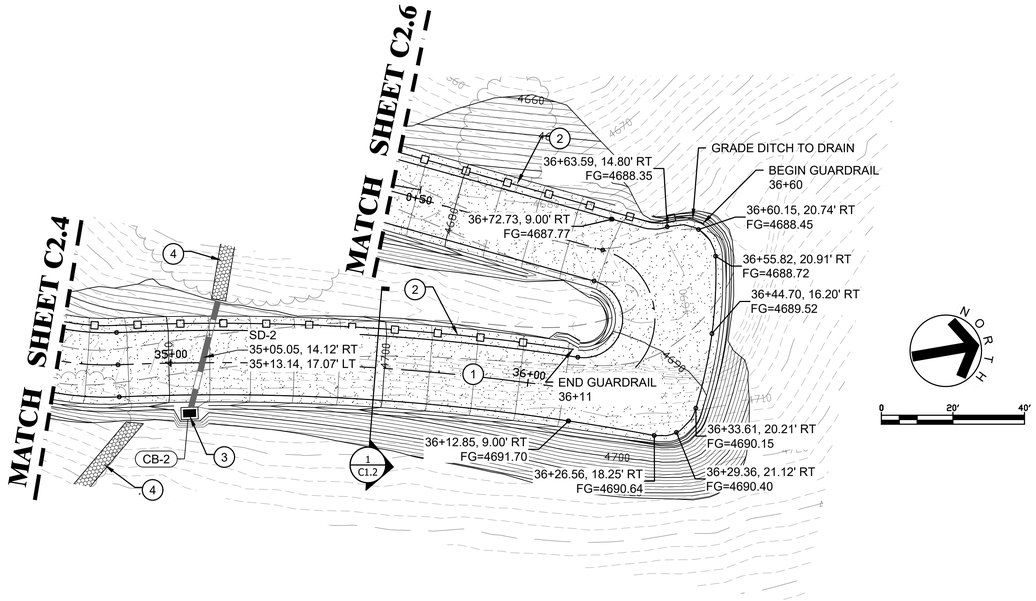

CALLOUTS-WWTP ACCESS RD	
1	INSTALL ACCESS ROAD PER DETAIL 1, SHEET C1.2
2	INSTALL GUARD RAIL PER ADOT STDS OR EQUAL
3	CATCH BASIN PER MSD 537, DOUBLE GRATE & 18" CMP. SEE PROFILE ON THIS SHEET
4	INSTALL 4' WIDE RIP RAP AT DRAIN PIPE OUTLET. SEE NOTE 2.
5	INSTALL 12' WIDE CHAIN LINK SWING GATE AT EXISTING FENCE LINE PER MSD 160 OR AS DIRECTED BY THE TOWN.

NOTES
1. THE CEMETARY IS A HISTORICAL SITE. ANY IMPROVEMENTS SHALL COMPLY WITH THE RESTRICTIONS FOR THE SITE. CONTRACTOR SHALL CONSULT WITH THE TOWN FOR DETAILS.
2. ALL RIP RAP SHALL BE D50=6" x 12" DEEP w/GEOTEXTILE FABRIC UNDERLAY UNLESS OTHERWISE INDICATED.
3. ALL SLOPES STEEPER THAN 2:1 SHALL HAVE EROSION PROTECTION PER GEOTECHNICAL ENGINEER RECOMMENDATIONS.
4. LINE ALL PONDS, DITCHES, DRAINAGE FLOW PATHS WITH RIP RAP TO HEIGHT=MIN. DEPTH. RIP RAP NOT SHOWN FOR CLARITY.
5. PROPOSED ACCESS EASEMENTS ARE REQUIRED THROUGH THE PRIVATE PROPERTIES SHOWN IN THESE PLANS. SHOWN FOR REFERENCE ONLY. FINAL DETAILS TO BE COORDINATED BY THE TOWN.

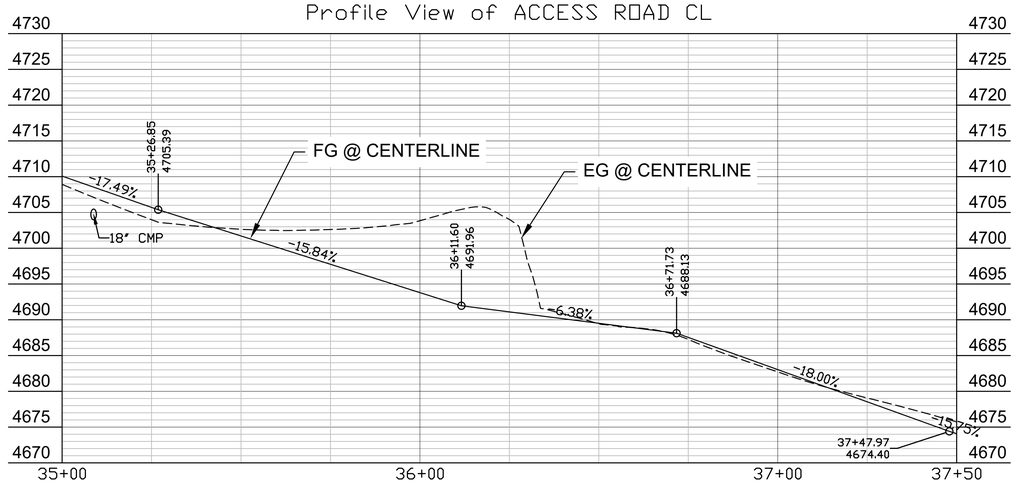

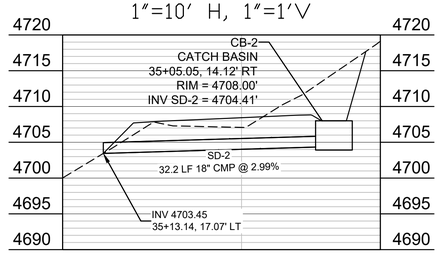

NO	BY	DATE	REVISIONS	DATE	APP

PREPARED BY:
DESIGNED BY:
DRAWN BY: NMW
CHECKED BY: KG
SCALE: AS SHOWN
DATE 10/31/25
JOB NO. 19-1101CE

TITLE
WWTP ACCESS RD P&P 35+00 TO 37+50

JOB
JEROME WWTP
GRADING & UTILITIES PLANS
YAVAPAI COUNTY AZ

PREPARED BY:
SOUTHWESTERN ENVIRONMENTAL CONSULTANTS, INC
825 COVE PARKWAY
COTTONWOOD, AZ 86326
928-282-7787

SHEET
C2.5
15 OF 99 SHEETS

JOB NO. 19-1101CE
1379

Registered Professional Engineer
CERTIFICATE NO.
49109
KRISHAN GEVINDA GINIGE
10/31/25
DATE SIGNED
ARIZONA, U.S.A.

© SEC, Inc., All Rights Reserved. This document is protected under the United States Copyright Act. No part may be reproduced in any form or by any means or stored in a database or retrieval system, without the prior written permission of SEC, Inc. These plans/documents have been prepared using technical knowledge that would be applied by other qualified registrants who practice the same profession in the same area and at the same time. Efforts have been made to be as accurate as possible. However, plans/documents could contain unintentional technical inaccuracies, typographical errors or omissions. Users of these plans/documents should understand that it is highly probable that errors and omissions will occur in any plan/document preparation process.

S:\LAND PROJECTS 2004 ENGINEERING\19-1101CE JEROME WWTP\DWG\C3D\PLANS\XBGRAD-19-1101CE.DWG

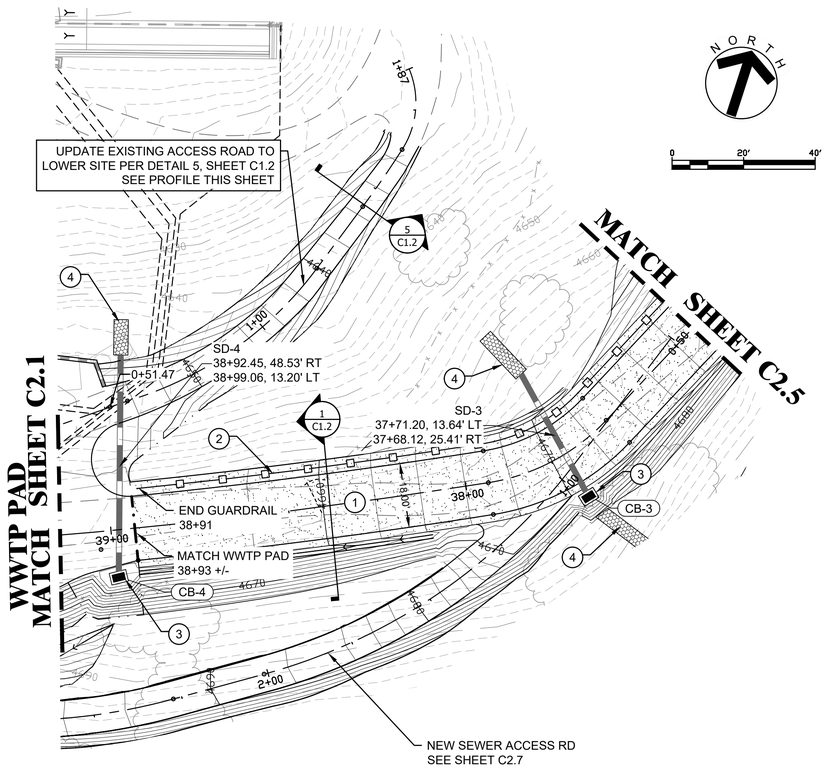

CALLOUTS-WWTP ACCESS RD	
1	INSTALL ACCESS ROAD PER DETAIL 1, SHEET C1.2
2	INSTALL GUARD RAIL PER ADOT STDS OR EQUAL
3	CATCH BASIN PER MSD 537, DOUBLE GRATE & 18" CMP. SEE PROFILE ON THIS SHEET
4	INSTALL 4' WIDE RIP RAP AT DRAIN PIPE OUTLET. SEE NOTE 2.
5	INSTALL 12' WIDE CHAIN LINK SWING GATE AT EXISTING FENCE LINE PER MSD 160 OR AS DIRECTED BY THE TOWN.

NOTES
1. THE CEMETARY IS A HISTORICAL SITE. ANY IMPROVEMENTS SHALL COMPLY WITH THE RESTRICTIONS FOR THE SITE. CONTRACTOR SHALL CONSULT WITH THE TOWN FOR DETAILS.
2. ALL RIP RAP SHALL BE D50=6" x 12" DEEP w/GEOTEXTILE FABRIC UNDERLAY UNLESS OTHERWISE INDICATED.
3. ALL SLOPES STEEPER THAN 2:1 SHALL HAVE EROSION PROTECTION PER GEOTECHNICAL ENGINEER RECOMMENDATIONS.
4. LINE ALL PONDS, DITCHES, DRAINAGE FLOW PATHS WITH RIP RAP TO HEIGHT=MIN. DEPTH. RIP RAP NOT SHOWN FOR CLARITY.
5. PROPOSED ACCESS EASEMENTS ARE REQUIRED THROUGH THE PRIVATE PROPERTIES SHOWN IN THESE PLANS. SHOWN FOR REFERENCE ONLY. FINAL DETAILS TO BE COORDINATED BY THE TOWN.

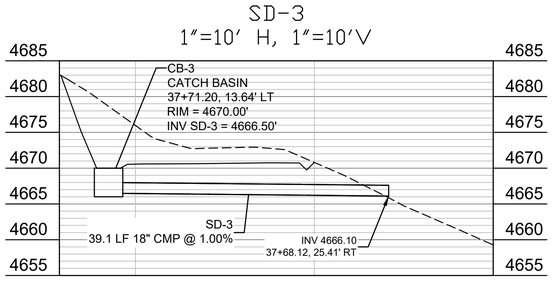

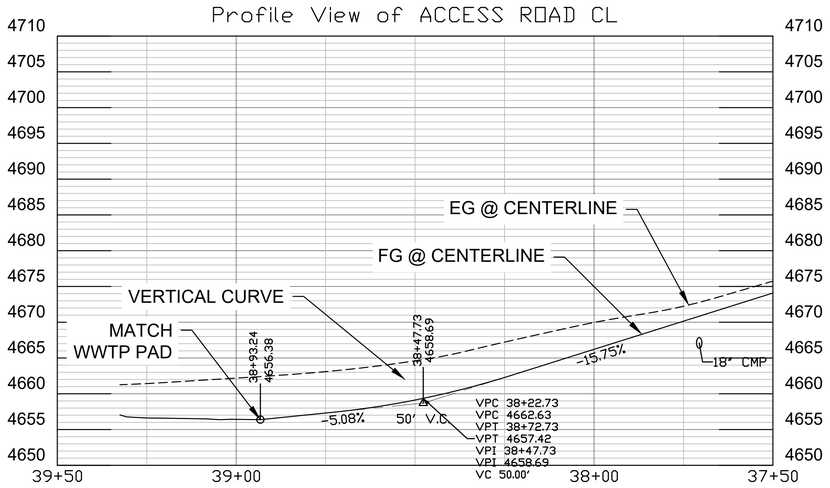

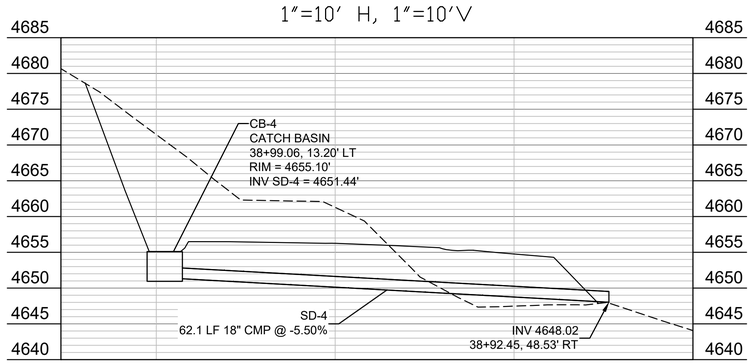

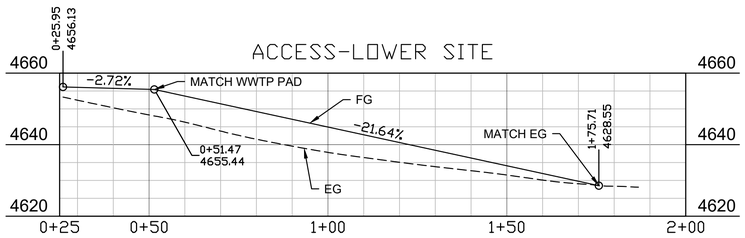

Item I.

NO	BY	DATE	REVISIONS	DATE	APP

Professional Engineer
CERTIFICATE NO.
49106
KRISHAN GEVINDA GINIGE
10/31/25
DATE SIGNED
ARIZONA, U.S.A.

PREPARED BY:
DESIGNED BY:
DRAWN BY: NMW
CHECKED BY: KG
SCALE: AS SHOWN
DATE 10/31/25
JOB NO. 19-1101CE

TITLE
RD P&P 37+50 TO
WWTP ACCESS RD P&P
39+75

JOB
JEROME WWTP
GRADING & UTILITIES PLANS
YAVAPAI COUNTY AZ

PREPARED BY:
SEC Inc.
SOUTHWESTERN ENVIRONMENTAL CONSULTANTS, INC
825 COVE PARKWAY
COTTONWOOD, AZ 86326
928-282-7787

SHEET
C2.6
16 OF 99 SHEETS

JOB NO. 19-1101CE
1380

© SEC, Inc., All Rights Reserved. This document is protected under the United States Copyright Act. No part may be reproduced in any form or by any means or stored in a database or retrieval system, without the prior written permission of SEC, Inc. These plans/documents have been prepared using technical knowledge that would be applied by other qualified registrants who practice the same profession in the same area and at the same time. Efforts have been made to be as accurate as possible. However, plans/documents could contain unintentional technical inaccuracies, typographical errors or omissions. Users of these plans/documents should understand that it is highly probable that errors and omissions will occur in any plan/document preparation process.

S:\LAND PROJECTS 2004 ENGINEERING\19-1101CE JEROME WWTP\DWG\C3D\PLANS\XBGRAD-19-1101CE.DWG

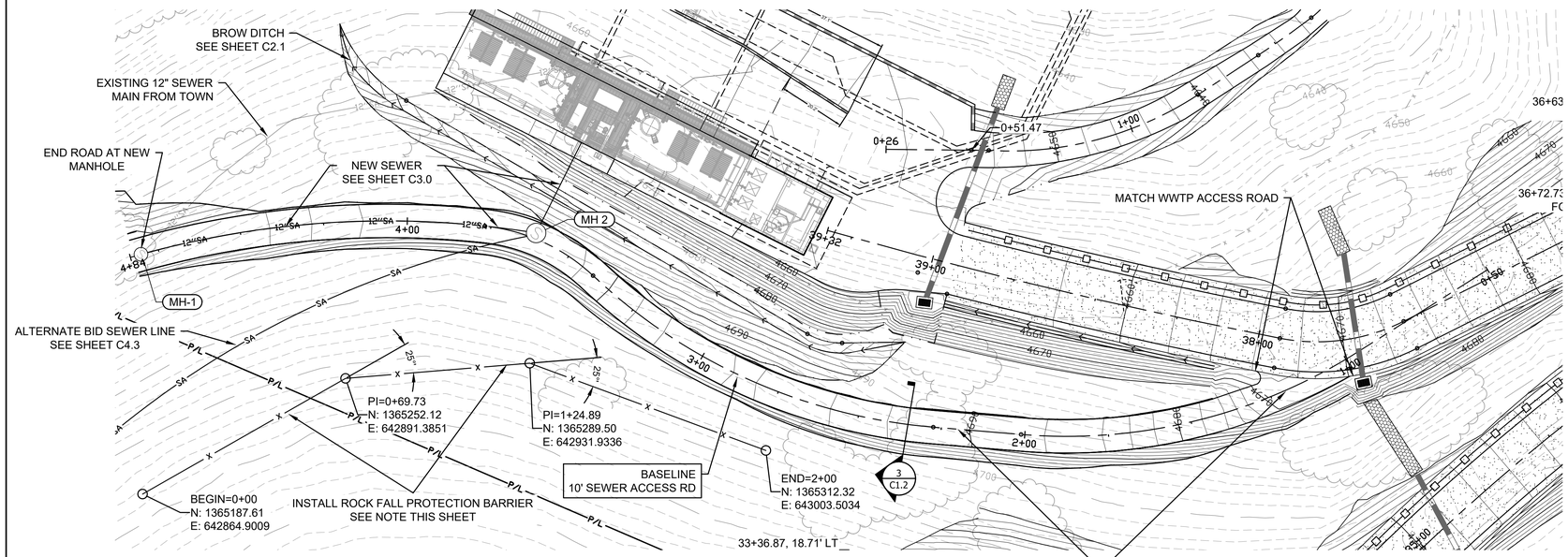

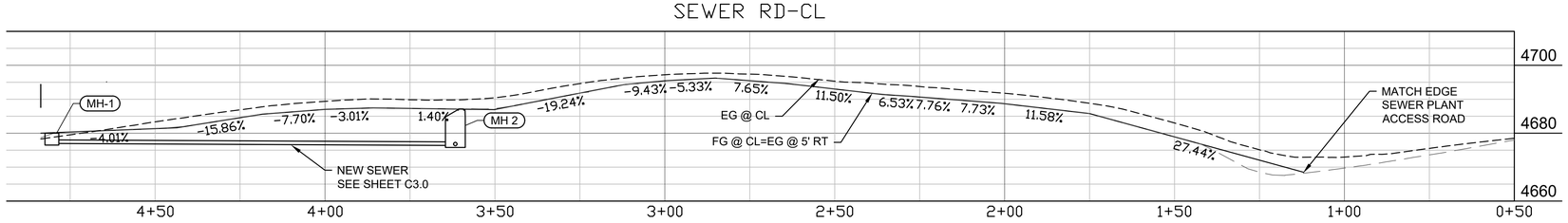

ROCK FALL PROTECTION BARRIER
PROVIDE ROCK FALL PROTECTION BARRIER. ALTERNATE BID ITEM. SEE PLAN SPECIFICATIONS FOR DETAILS.

NO	BY	DATE	REVISIONS	DATE	APP

49108
KRISHAN
GEVINDA
GINIGE
10/31/25
ARIZONA, U.S.A.

PREPARED BY:
DESIGNED BY:
DRAWN BY: NMW
CHECKED BY: KG
SCALE: AS SHOWN
DATE 10/31/25
JOB NO. 19-1101CE

TITLE
NEW SEWER ACCESS ROAD

JOB
JEROME WWTP
GRADING & UTILITIES PLANS
YAVAPAI COUNTY AZ

PREPARED BY:
SOUTHWESTERN ENVIRONMENTAL CONSULTANTS, INC
825 COVE PARKWAY
COTTONWOOD, AZ 86326
928-282-7787

SHEET
C2.7
17 OF 99 SHEETS

JOB NO. 19-1101CE
1381

Professional Engineer's Certification: I hereby certify that these documents were prepared by me or under my direct supervision and that I am a duly licensed professional engineer under the laws of the State of Arizona.

© SEC, Inc. All Rights Reserved. This document is protected under the United States Copyright Act. No part may be reproduced in any form or by any means or stored in a database or retrieval system, without the prior written permission of SEC, Inc. These plans/documents have been prepared using technical knowledge that would be applied by other qualified registrants who practice the same profession in the same area and at the same time. Efforts have been made to be as accurate as possible. However, plans/documents could contain unintentional technical inaccuracies, typographical errors or omissions. Users of these plans/documents should understand that it is highly probable that errors and omissions will occur in any plan/document preparation process.

S:\LAND PROJECTS 2004 ENGINEERING\19-1101CE JEROME WWTP\DWG\C3D\PLANS\XBGRAD-19-1101CE.DWG

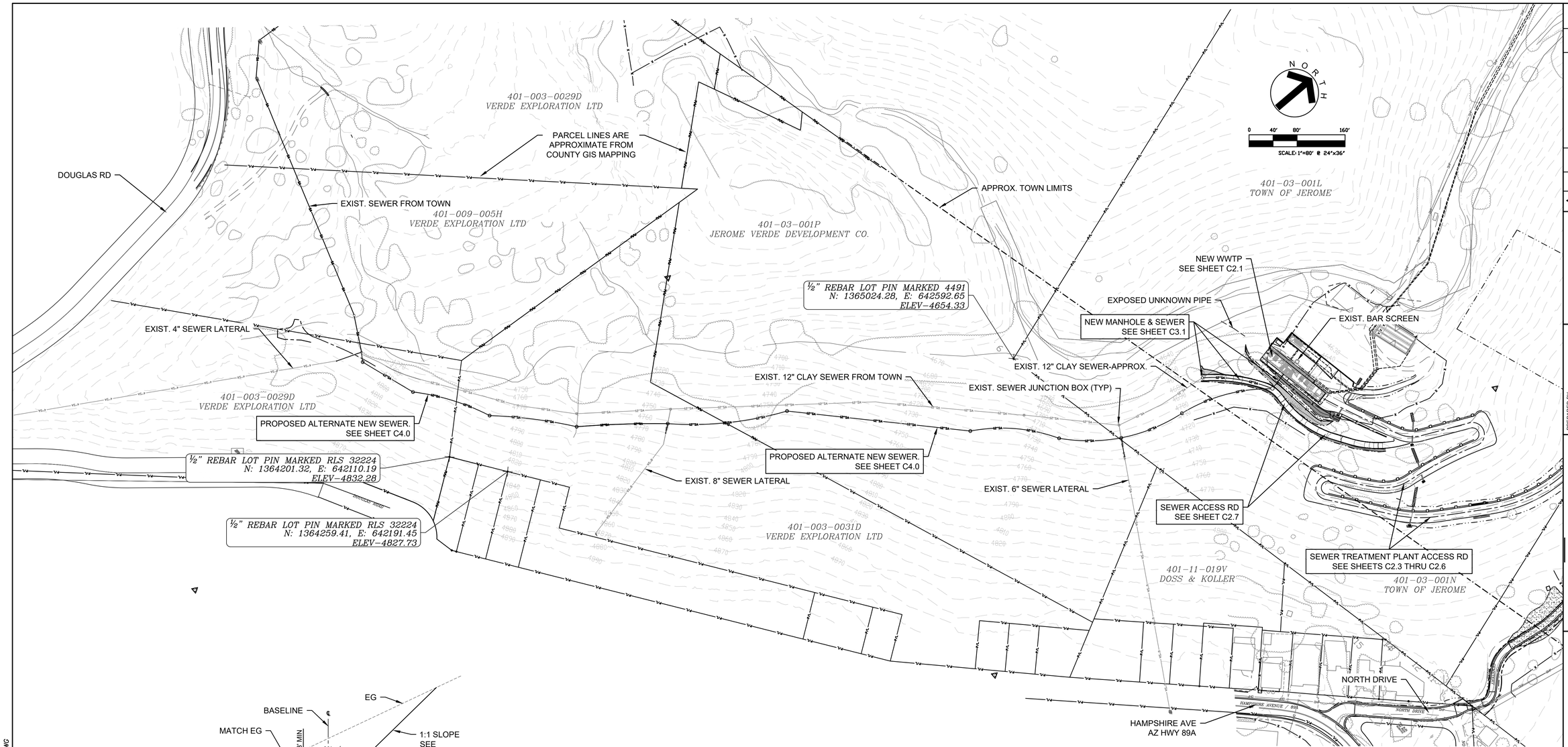

1 TYPICAL SEWER ROAD SECTION

1"=6'

CONSTRUCTION NOTES

1. THE EXISTING SEWER PIPES ARE VERY SHALLOW. EXTREME CAUTION IS REQUIRED TO ENSURE THE PIPES ARE PROTECTED DURING CONSTRUCTION. EXISTING SEWER TO REMAIN OPERATIONAL AT ALL TIMES UNTIL THE NEW SEWER IS ACTIVATED.
2. ALL TEMPORARY AND NEW SEWER PIPES AND STRUCTURES SHALL BE INSTALLED PER THE SPECIFICATIONS PROVIDED BY THE SEWER PLANT ENGINEER.

STRUCTURES					
STRUCTURE	DESC	RIM	INVERT	DEPTH (FT)	LOCATION
MH-1	MANHOLE-48"	4680.000'	OUT = 4677.00'	3.00	N: 1365243.77 E: 642820.46
MH 2	MANHOLE-60"	4687.137'	IN = 4676.40' OUT = 4676.30'	10.83	N: 1365321.33 E: 642909.50

PIPES			
PIPE	SIZE & TYPE	LENGTH	SLOPE
SS-1	12" FPVC	119.01'	0.50%
SS-2	12" DIP SEWER	30.20'	10.31%

ESTIMATE OF SEWER QTY'S		
ITEM	QTY	UNITS
12" PVC PIPE	100	LF
12" DIP	42	LF
48" MANHOLE	1	EA
60" DROP MANHOLE	1	EA

NO	BY	DATE	REVISIONS	DATE	APP

Registered Professional Engineer (Civil)
CERTIFICATE NO.
49108
KRISHAN GEVINDA GINIGE
10/31/25
DATE SIGNED
ARIZONA, U.S.A.

PREPARED BY:
DESIGNED BY:
DRAWN BY: NMW
CHECKED BY: KG
DATE: 10/31/25
SCALE: AS SHOWN
JOB NO. 19-1101CE

TITLE: NEW SEWER SITE MAP, SURVEY CONTROL

JOB: JEROME WWTP GRADING & UTILITIES PLANS

YAVAPAI COUNTY AZ

PREPARED BY:
SOUTHWESTERN ENVIRONMENTAL CONSULTANTS, INC
825 COVE PARKWAY
COTTONWOOD, AZ 86326
928-282-7787

SHEET
C3.0
18 OF 99 SHEETS

JOB NO. 19-1101CE
1382

SEC, Inc., All Rights Reserved. This document is protected under the United States Copyright Act. No part may be reproduced in any form or by any means or stored in a database or retrieval system, without the prior written permission of SEC, Inc. These plans/documents have been prepared using technical knowledge that would be applied by other qualified registrants who practice this same profession in the same area and at the same time. Efforts have been made to be as accurate as possible. However, plans/documents could contain unintentional technical inaccuracies, typographical errors or omissions. Users of these plans/documents should understand that it is highly probable that errors and omissions will occur in any plan/document preparation process.

S:\LAND PROJECTS 2004 ENGINEERING\19-1101CE JEROME WWTP\DWG\C3D\PLANS\XBSAN-19-1101CE.DWG

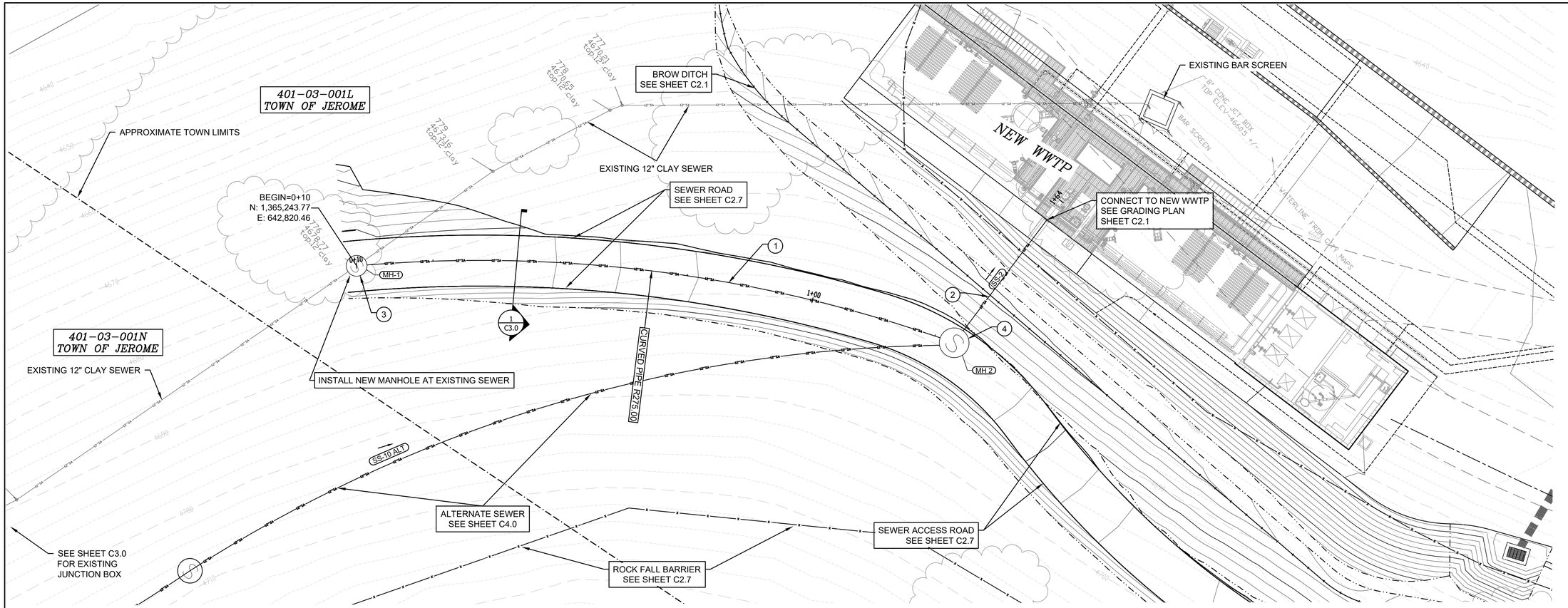

SEWER CALLOUTS. SEE CONSTRUCTION NOTES ON SHEET C3.0	
1	INSTALL 12" FPVC SEWER PIPE. CURVE PIPE @ 275' MIN. RADIUS. SEE NOTE 2, SHEET C3.0
2	INSTALL 12" DIP SEWER LINE
3	INSTALL 48" FLAT TOP SEWER MANHOLE PER MSD 420-1
4	INSTALL 60" SEWER MANHOLE PER MSD 420-1

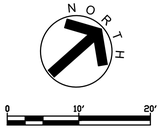

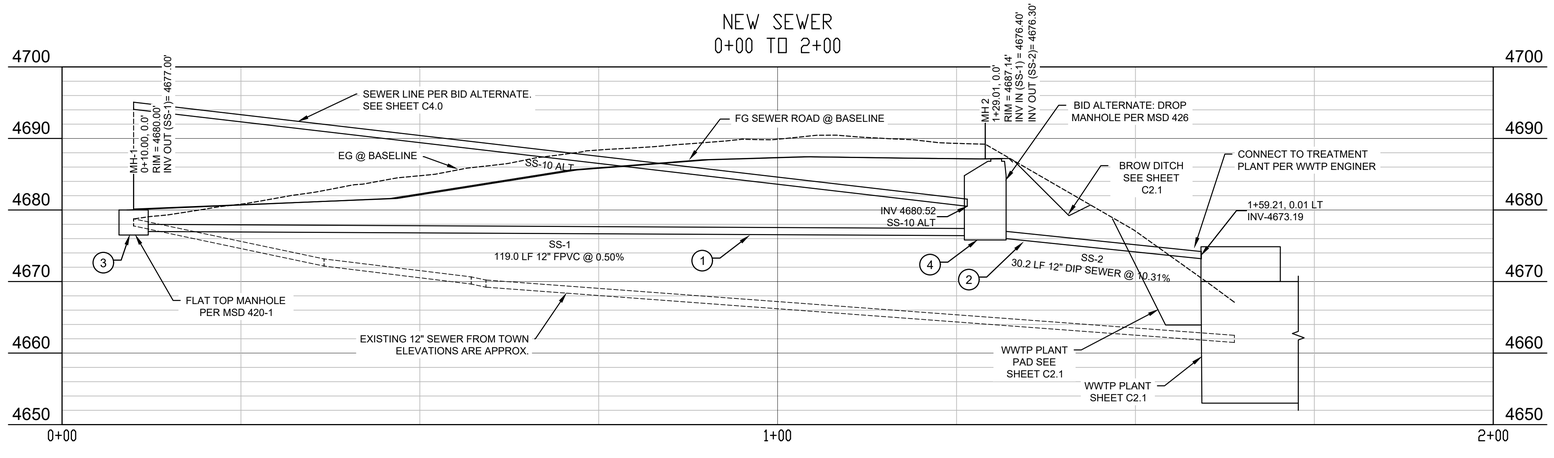

NO	BY	DATE	REVISIONS	DATE	APP

Professional Engineer
CERTIFICATE NO.
49100
KRISHAN
GEVINDA
GINIGE
10/31/25
DATE SIGNED
ARIZONA, U.S.A.

PREPARED BY:
DESIGNED BY:
DRAWN BY: NMW
CHECKED BY: KG
SCALE: AS SHOWN
DATE 10/31/25
JOB NO. 19-1101CE

TITLE
NEW SEWER P&P

JOB
JEROME WWTP
GRADING & UTILITIES PLANS
YAVAPAI COUNTY AZ

PREPARED BY:
SEC Inc.
SOUTHWESTERN ENVIRONMENTAL CONSULTANTS, INC
825 COVE PARKWAY
COTTONWOOD, AZ 86326
928-282-7787

SHEET
C3.1
19 OF 99 SHEETS

JOB NO. 19-1101CE
1383

SEC, Inc., All Rights Reserved. This document is protected under the United States Copyright Act. No part may be reproduced in any form or by any means or stored in a database or retrieval system, without the prior written permission of SEC, Inc. These plans/documents have been prepared using technical knowledge that would be applied by other qualified registrants who practice the same profession in the same area and at the same time. Efforts have been made to be as accurate as possible. However, plans/documents could contain unintentional technical inaccuracies, typographical errors or omissions. Users of these plans/documents should understand that it is highly probable that errors and omissions will occur in any plan/document preparation process.

S:\LAND PROJECTS 2004 ENGINEERING\19-1101CE JEROME WWTP\DWG\C3D\PLANS\XBSAN-19-1101CE.DWG

EXISTING EXPOSED PIPE AT WASH XING
EXISTING SEWER STRUCTURE
EXISTING SEWER
PARCEL LINES ARE APPROXIMATE PER COUNTY GIS MAPS
APPROX. TOWN LIMITS
EXISTING MINE RD
DOUGLAS RD
OPTIONAL ACCESS ROUTE
EXISTING 10" SEWER PIPE (EXPOSED AT WASH XING)
EXPOSED UNKNOWN PIPE
EXIST. JUNCTION BOX JB-1 CONNECT NEW SEWER
WEST TURNAROUND SEE SHEET C4.4
UNIDENTIFIED WASH
EXIST. 4" ABS SEWER LATERAL 1 SEE SHEET C4.4
EXIST. JUNCTION BOX JB-2
EXIST. JUNCTION BOX JB-3
EXISTING SEWER TO BE ABANDONED IN PLACE
EXIST. JUNCTION BOX JB-4
PROPOSED 12" SEWER
EXIST. 8" SEWER LATERAL 2 SEE SHEET C4.5
EXIST. 6" CLAY SEWER LATERAL 3 SEE SHEET C4.5
NEW STORM CATCH BASIN SEE SHEET C4.5
CONNECT TO MANHOLE 2. SEE SHEET C3.1
EXIST. BAR SCREEN
NEW WWTP SEE SHEET C2.1
SEWER ACCESS RD SEE SHEET C2.7
SEWER TREATMENT PLANT ACCESS RD SEE SHEETS C2.3 THRU C2.6
NORTH DRIVE
HAMPSHIRE AVENUE / 60S
HAMPSHIRE AVE
AZ HWY 89A
DOUGLAS RD

SHEET C4.1
SHEET C4.2
SHEET C4.3
SHEET C4.4

401-003-0029D
VERDE EXPLORATION LTD

401-009-005H
VERDE EXPLORATION LTD

401-03-001P
JEROME VERDE DEVELOPMENT CO.

401-03-001L
TOWN OF JEROME

401-003-0031D
VERDE EXPLORATION LTD

401-11-019V
DOSS & KOLLER

401-03-001N
TOWN OF JEROME

½" REBAR LOT PIN MARKED RLS 32224
N: 1364201.32, E: 642110.19
ELEV=4832.28

½" REBAR LOT PIN MARKED RLS 32224
N: 1364259.41, E: 642191.45
ELEV=4827.73

½" REBAR LOT PIN MARKED 4491
N: 1365024.28, E: 642592.65
ELEV=4654.33

MH-1 ALT, MH-2 ALT, MH-3 ALT, MH-4 ALT, MH-5 ALT, MH-6 ALT, MH-7 ALT, MH-8 ALT, MH-9 ALT, MH-10 ALT
SS-1 ALT, SS-2 ALT, SS-3 ALT, SS-4 ALT, SS-5 ALT, SS-6 ALT, SS-7 ALT, SS-7A ALT, SS-8 ALT, SS-9 ALT, SS-10 ALT
SS-LAT-2-2

0 40' 80' 160'
SCALE: 1"=80' @ 24"x36"

NO	BY	DATE	REVISIONS	DATE	APP

PREPARED BY:
DESIGNED BY: MW
DRAWN BY:
CHECKED BY: KG
DATE: 10/31/25
SCALE: AS SHOWN
JOB NO. 19-1101CE

TITLE: ALT SEWER SITE MAP, SURVEY CONTROL

JOB: JEROME WWTP GRADING & UTILITIES PLANS
YAVAPAI COUNTY AZ

PREPARED BY:
SOUTHWESTERN ENVIRONMENTAL CONSULTANTS, INC
825 COVE PARKWAY
COTTONWOOD, AZ 86326
928-282-7787

SHEET
C4.0
20 OF 99 SHEETS

JOB NO. 19-1101CE
1384

STRUCTURES					
STRUCTURE	DESC	RIM	INVERT	DEPTH (FT)	LOCATION
CO-EX-1-NEW	CLEANOUT	4802.180'	OUT = 4801.46'	0.72	N: 1364160.99 E: 641866.49
CO-EX-2-NEW	CLEANOUT	4770.445'	OUT = 4768.90'	1.55	N: 1364501.75 E: 642312.84
CO-EX3-NEW	CLEANOUT	4728.065'	OUT = 4727.55'	0.52	N: 1365059.93 E: 642836.62
MH-1 ALT	MANHOLE-48"	4789.609'	IN = 4784.55' OUT = 4784.45'	5.16	N: 1364193.22 E: 641895.93
MH-2 ALT	MANHOLE-48"	4787.913'	IN = 4782.96' OUT = 4782.86'	5.05	N: 1364224.86 E: 641988.17
MH-3 ALT	MANHOLE-48"	4780.910'	IN = 4775.35' OUT = 4775.25'	5.66	N: 1364296.85 E: 642100.74
MH-4 ALT	MANHOLE-48"	4772.099'	IN = 4766.74' OUT = 4766.64'	5.46	N: 1364395.50 E: 642208.64
MH-5 ALT	MANHOLE-48"	4759.803'	IN = 4754.64' IN = 4754.85' OUT = 4754.54'	5.26	N: 1364514.63 E: 642302.84
MH-6 ALT	MANHOLE-48"	4754.907'	IN = 4750.41' OUT = 4750.31'	4.59	N: 1364679.90 E: 642415.26
MH-7 ALT	MANHOLE-48"	4729.609'	IN = 4724.18' OUT = 4724.08'	5.53	N: 1364891.34 E: 642638.12
MH-8 ALT	MANHOLE-48"	4712.834'	IN = 4706.04' OUT = 4705.94'	6.89	N: 1364996.38 E: 642743.01
MH-9 ALT	MANHOLE-48"	4705.547'	IN = 4699.49' IN = 4700.39' OUT = 4699.39'	6.16	N: 1365075.93 E: 642809.37
MH-10 ALT	MANHOLE-48"	4704.172'	IN = 4699.06' OUT = 4698.96'	5.21	N: 1365179.64 E: 642843.49

PIPES				
PIPE	SIZE & TYPE	LENGTH	SLOPE	RADIUS
SS-1 ALT	NEW 12" FPVC SEWER	16.54'	15.36%	0.00
SS-2 ALT	NEW 12" FPVC SEWER	97.51'	1.53%	8856.68
SS-3 ALT	NEW 12" FPVC SEWER	134.32'	5.59%	378.94
SS-4 ALT	NEW 12" FPVC SEWER	151.93'	7.89%	1678.96
SS-5 ALT	NEW 12" FPVC SEWER	200.94'	2.06%	563.97
SS-6 ALT	NEW 12" FPVC SEWER	307.21'	8.51%	28124.53
SS-7 ALT	NEW 12" FPVC SEWER	150.27'	12.01%	277.65
SS-7A ALT	NEW 12" FPVC SEWER	146.41'	5.81%	779.23
SS-8 ALT	NEW 12" FPVC SEWER	104.13'	6.20%	296.23
SS-9 ALT	NEW 12" FPVC SEWER	109.85'	0.30%	286.54
SS-10 ALT	NEW 12" FPVC SEWER	155.46'	11.86%	278.54
SS-LAT-3-2	NEW 6' SEWER	27.25'	99.44%	0.00
SS-LAT 1-1	NEW 4' DIP SEWER	25.88'	1.00%	0.00
SS-LAT 1-2	NEW 4' SEWER	16.70'	80.70%	0.00
SS LAT-2-2	NEW 8' SEWER	12.60'	110.87%	0.00
SS LAT-3-1	NEW 6' SEWER	4.35'	1.77%	0.00
SS LAT 2-1	NEW 8' SEWER	3.71'	2.00%	0.00

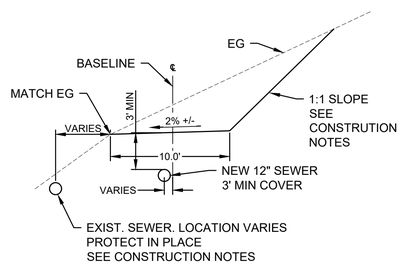

1 TYPICAL CONSTRUCTION ROAD SECTION
1"=6'

CONSTRUCTION NOTES
1. THE EXISTING SEWER IS VERY SHALLOW. EXTREME CAUTION IS REQUIRED TO ENSURE THE PIPE IS PROTECTED DURING CONSTRUCTION. EXISTING SEWER TO REMAIN OPERATIONAL AT ALL TIMES UNTIL THE NEW SEWER IS ACTIVATED.
2. THE EXISTING LATERAL SEWERS SHALL BE TEMPORARILY RE-ROUTED AS NEEDED DURING CONSTRUCTION. TO REMAIN OPERATIONAL UNTIL THE NEW SEWER IS ACTIVATED
3. WASTE MATERIAL FROM THE SEWER AND ROAD CONSTRUCTION SHALL BE REMOVED FROM PRIVATELY OWNED PROPERTIES.
4. CUT SLOPES STEEPER THAN 2:1 SHOULD BE EVALUATED AND APPROVED BY GEOTECHNICAL ENGINEER.
5. ALL TEMPORARY AND NEW SEWER PIPES AND STRUCTURES SHALL BE INSTALLED PER THE SPECIFICATIONS PROVIDED BY THE SEWER PLANT ENGINEER.
6. NEW EASEMENTS ARE NEEDED FOR BOTH EXISTING AND PROPOSED SEWER ACROSS PRIVATE PROPERTIES. TO BE COORDINATED BY THE TOWN.

EARTHWORK ESTIMATE (CUBIC YARDS)*			
	CUT	FILL	NET
SEWER ROAD	4,043	33	4010 CUT
*NO SHRINKAGE OR EXPANSION FACTORS APPLIED. EARTHWORK IS TO FINISHED GRADE. DEPTH TO SUBGRADE AND PIPE TRENCHING NOT ACCOUNTED FOR			

ESTIMATE OF SEWER QTY'S		
ITEM	QTY	UNITS
12" FPVC PIPE	1,568	LF
4" PVC SEWER	43	LF
6" PVC SEWER	32	LF
8" PVC SEWER	16	LF
48" MANHOLE	10	EA
CLEANOUT	3	EA

Registered Professional Engineer (Civil) CERTIFICATE NO. 49108 KRISHAN GEVINDA GINIGE 10/31/25 DATE SIGNED ARIZONA, U.S.A.

© SEC, Inc., All Rights Reserved. This document is protected under the United States Copyright Act. No part may be reproduced in any form or by any means or stored in a database or retrieval system, without the prior written permission of SEC, Inc. These plans/documents could contain unintentional technical inaccuracies, typographical errors or omissions. Users of these plans/documents should understand that it is highly probable that errors and omissions will occur in any plan/document preparation process. However, plans/documents could contain unintentional technical inaccuracies, typographical errors or omissions. Users of these plans/documents should understand that it is highly probable that errors and omissions will occur in any plan/document preparation process.

S:\LAND PROJECTS 2004 ENGINEERING\19-1101CE JEROME WWTP\DWG\C3D\PLANS\XBSAN-ALT-19-1101CE.DWG

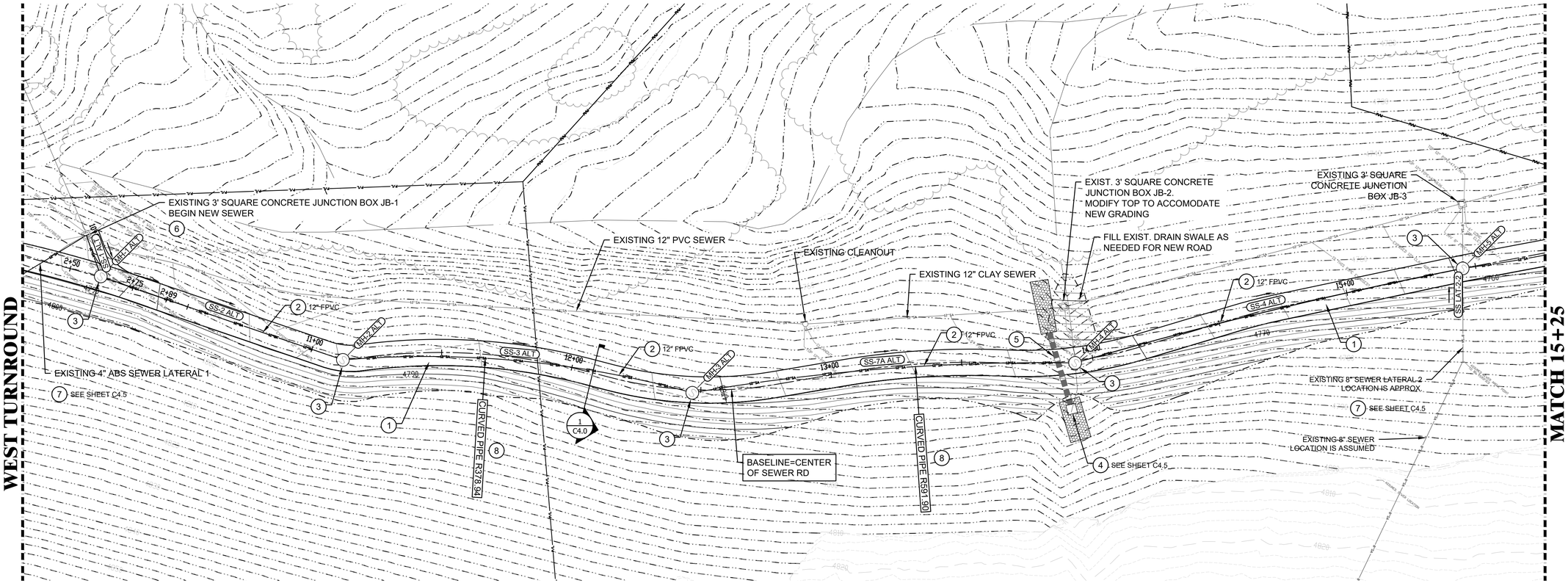

SEWER CALLOUTS. SEE CONSTRUCTION NOTES ON SHEET C4.0	
1	EXCAVATE SEWER CONSTRUCTION ROAD PER DETAIL 1, SHEET C4.0
2	INSTALL SEWER PIPE. SIZE AND TYPE PER PLAN. SEE NOTE 5, SHEET C4.0
3	INSTALL 48" SEWER MANHOLE PER MSD 420-1
4	INSTALL CATCH BASIN. SEE SHEET C4.5
5	INSTALL CULVERT. SEE SHEET C4.5
6	CONNECT NEW SEWER PIPE TO EXISTING JUNCTION BOX. CONTRACTOR TO PROVIDE DETAILS & SHOP DRAWINGS TO PROJECT ENGINEER FOR APPROVAL PRIOR TO CONNECTION.
7	PROTECT EXISTING SEWER LATERAL IN PLACE. CONNECT TO NEW SEWER WHEN ACTIVE. SEE PROFILES FOR DETAILS
8	INSTALL CURVED SEWER PIPE. RADIUS PER PLAN. SEE NOTE 5, SHEET C4.0.

CONSTRUCTION NOTES

1. THE EXISTING SEWER PIPES ARE VERY SHALLOW. EXTREME CAUTION IS REQUIRED TO ENSURE THE PIPES ARE PROTECTED DURING CONSTRUCTION. EXISTING SEWER TO REMAIN OPERATIONAL AT ALL TIMES UNTIL THE NEW SEWER IS ACTIVATED.
2. THE EXISTING LATERAL SEWERS SHALL BE TEMPORARILY RE-ROUTED AS NEEDED DURING CONSTRUCTION UNTIL THE NEW SEWER IS ACTIVATED.
3. WASTE MATERIAL FROM THE SEWER AND ROAD CONSTRUCTION SHALL BE REMOVED FROM PRIVATELY OWNED PROPERTIES.
4. CUT SLOPES STEEPER THAN 2:1 SHOULD BE EVALUATED AND APPROVED BY GEOTECHNICAL ENGINEER.
5. ALL TEMPORARY AND NEW SEWER PIPES AND STRUCTURES SHALL BE INSTALLED PER THE SPECIFICATIONS PROVIDED BY THE SEWER PLANT ENGINEER.
6. NEW EASEMENTS ARE NEEDED FOR BOTH EXISTING AND PROPOSED SEWER ACROSS PRIVATE LAND. TO BE COORDINATED BY THE TOWN.

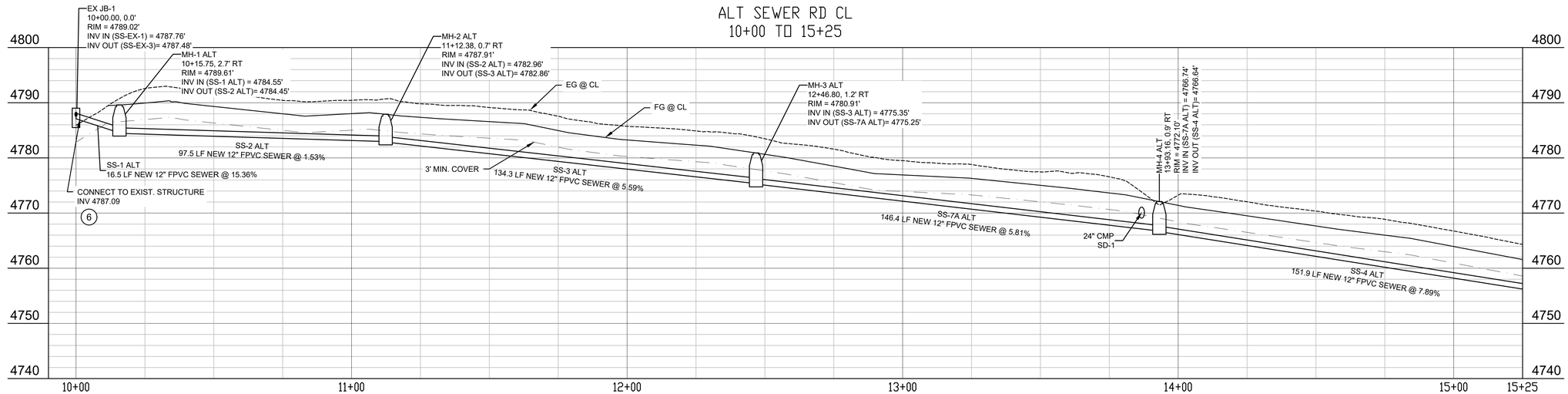

Professional Engineer
CERTIFICATE NO.
49100
KRISHAN GEVINDA GINIGE
10/31/25
DATE SIGNED
ARIZONA, U.S.A.

NO	BY	DATE	REVISIONS	DATE	APP

PREPARED BY:
DESIGNED BY:
DRAWN BY: NMW
CHECKED BY: KG
SCALE: AS SHOWN
DATE 10/31/25
JOB NO. 19-1101CE

TITLE
ALT SEWER P&P 10+00 TO 15+25

JOB
JEROME WWTP
GRADING & UTILITIES PLANS
YAVAPAI COUNTY AZ

PREPARED BY:
SOUTHWESTERN ENVIRONMENTAL CONSULTANTS, INC
825 COVE PARKWAY
COTTONWOOD, AZ 86326
928-282-7787

SHEET
C4.1
21 OF 99 SHEETS

JOB NO. 19-1101CE

© SEC, Inc. All Rights Reserved. This document is protected under the United States Copyright Act. No part may be reproduced in any form or by any means or stored in a database or retrieval system, without the prior written permission of SEC, Inc. These plans/documents have been prepared using technical knowledge that would be applied by other qualified registrants who practice the same profession in the same area and at the same time. Efforts have been made to be as accurate as possible. However, plans/documents could contain unintentional technical inaccuracies, typographical errors or omissions. Users of these plans/documents should understand that it is highly probable that errors and omissions will occur in any plan/document preparation process.

S:\LAND PROJECTS 2004 ENGINEERING\19-1101CE JEROME WWTP\DWG\C3D\PLANS\XBSAN-ALT-19-1101CE.DWG

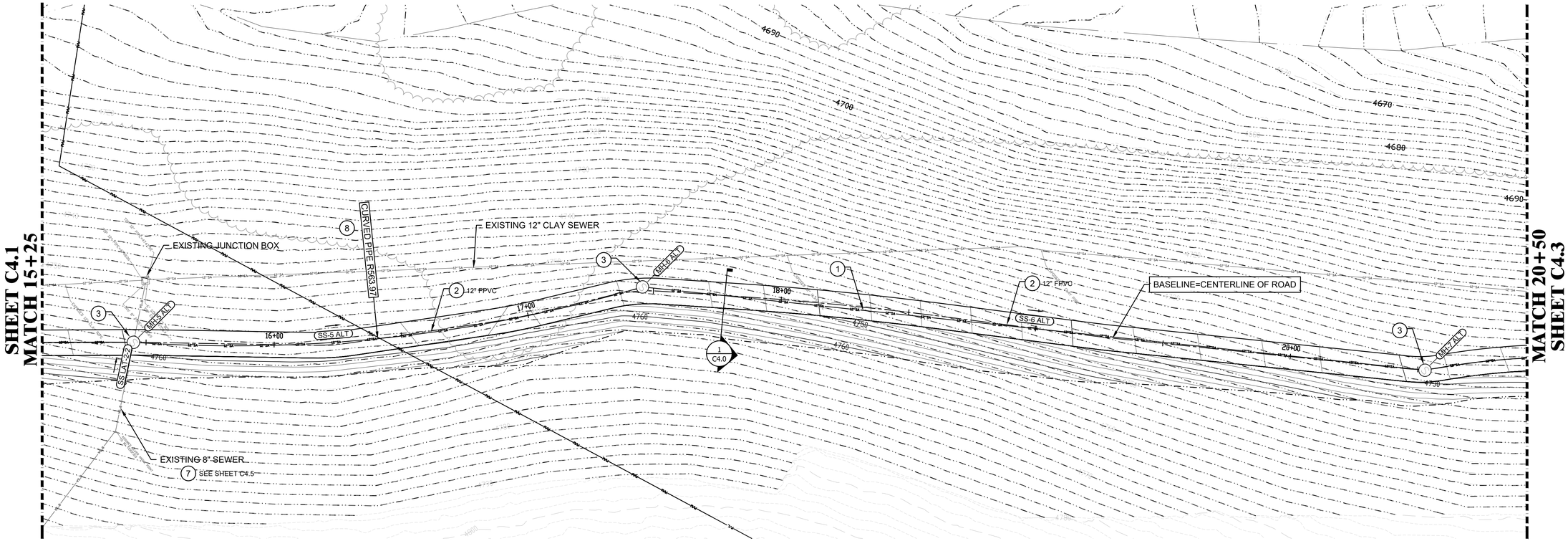

SEWER CALLOUTS. SEE CONSTRUCTION NOTES ON SHEET C4.0	
1	EXCAVATE SEWER CONSTRUCTION ROAD PER DETAIL 1, SHEET C4.0
2	INSTALL SEWER PIPE. SIZE AND TYPE PER PLAN. SEE NOTE 5, SHEET C4.0
3	INSTALL 48" SEWER MANHOLE PER MSD 420-1
4	INSTALL CATCH BASIN. SEE SHEET C4.5
5	INSTALL CULVERT. SEE SHEET C4.5
6	CONNECT NEW SEWER PIPE TO EXISTING JUNCTION BOX. CONTRACTOR TO PROVIDE DETAILS & SHOP DRAWINGS TO PROJECT ENGINEER FOR APPROVAL PRIOR TO CONNECTION.
7	PROTECT EXISTING SEWER LATERAL IN PLACE. CONNECT TO NEW SEWER WHEN ACTIVE. SEE PROFILES FOR DETAILS
8	INSTALL CURVED SEWER PIPE. RADIUS PER PLAN. SEE NOTE 5, SHEET C4.0.

CONSTRUCTION NOTES

1. THE EXISTING SEWER PIPES ARE VERY SHALLOW. EXTREME CAUTION IS REQUIRED TO ENSURE THE PIPES ARE PROTECTED DURING CONSTRUCTION. EXISTING SEWER TO REMAIN OPERATIONAL AT ALL TIMES UNTIL THE NEW SEWER IS ACTIVATED.
2. THE EXISTING LATERAL SEWERS SHALL BE TEMPORARILY RE-ROUTED AS NEEDED DURING CONSTRUCTION UNTIL THE NEW SEWER IS ACTIVATED.
3. WASTE MATERIAL FROM THE SEWER AND ROAD CONSTRUCTION SHALL BE REMOVED FROM PRIVATELY OWNED PROPERTIES.
4. CUT SLOPES STEEPER THAN 2:1 SHOULD BE EVALUATED AND APPROVED BY GEOTECHNICAL ENGINEER.
5. ALL TEMPORARY AND NEW SEWER PIPES AND STRUCTURES SHALL BE INSTALLED PER THE SPECIFICATIONS PROVIDED BY THE SEWER PLANT ENGINEER.
6. NEW EASEMENTS ARE NEEDED FOR BOTH EXISTING AND PROPOSED SEWER ACROSS PRIVATE LAND. TO BE COORDINATED BY THE TOWN.

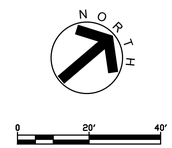

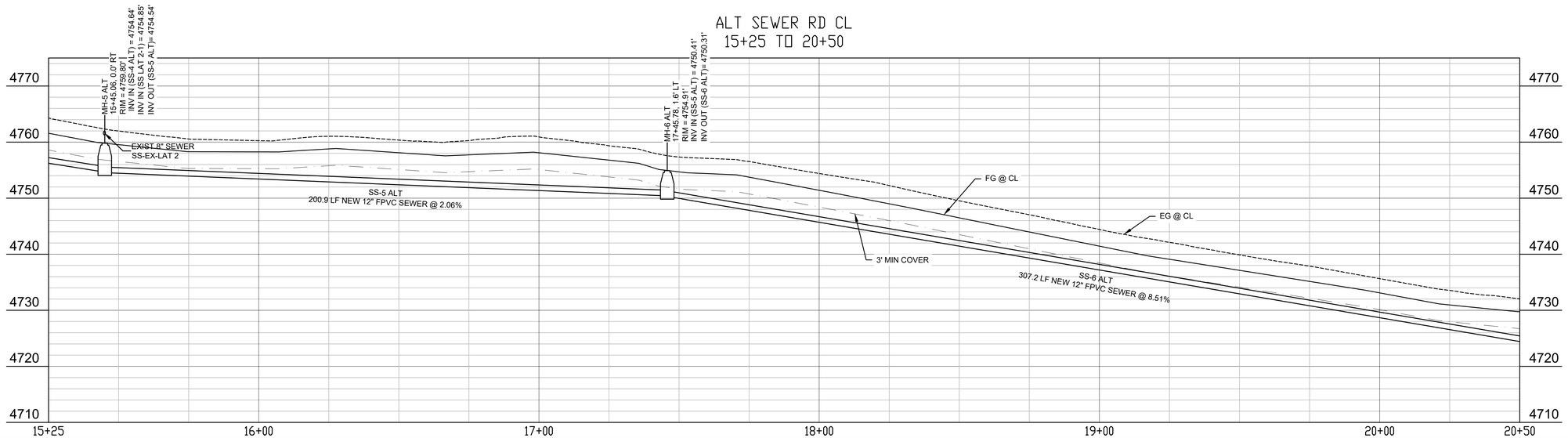

S:\LAND PROJECTS 2004 ENGINEERING\19-1101CE JEROME WWTP\DWG\C3D\PLANS\XBSAN-ALT-19-1101CE.DWG

Item I.

NO	BY	DATE	REVISIONS	DATE	APP

Registered Professional Engineer
CERTIFICATE NO.
49108
KRISHAN GEVINDA GINIGE
10/31/25
DATE SIGNED
ARIZONA, U.S.A.

PREPARED BY:
DESIGNED BY:
DRAWN BY: NMW
CHECKED BY: KG
DATE 10/31/25
SCALE: AS SHOWN
JOB NO. 19-1101CE

TITLE
ALT SEWER P&P 15+25 TO 20+50

JOB
JEROME WWTP
GRADING & UTILITIES PLANS
YAVAPAI COUNTY AZ

PREPARED BY:
SEC Inc.
SOUTHWESTERN ENVIRONMENTAL CONSULTANTS, INC
825 COVE PARKWAY
COTTONWOOD, AZ 86326
928-282-7787

SHEET
C4.2
22 OF 99 SHEETS

JOB NO. 19-1101CE
1386

© SEC, Inc., All Rights Reserved. This document is protected under the United States Copyright Act. No part may be reproduced in any form or by any means or stored in a database or retrieval system, without the prior written permission of SEC, Inc. These plans/documents have been prepared using technical knowledge that would be applied by other qualified registrants who practice the same profession in the same area and at the same time. Efforts have been made to be as accurate as possible. However, plans/documents could contain unintentional technical inaccuracies, typographical errors or omissions. Users of these plans/documents should understand that it is highly probable that errors and omissions will occur in any plan/document preparation process.

SHEET C4.2
MATCH 20+50

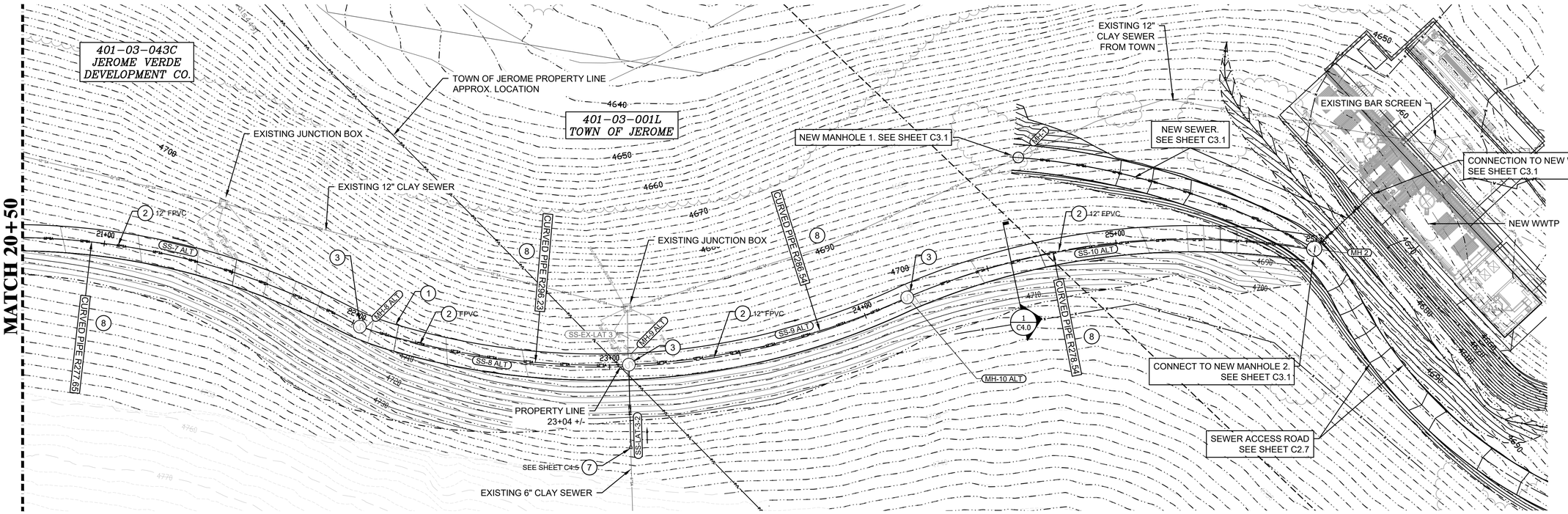

SEWER CALLOUTS. SEE CONSTRUCTION NOTES ON SHEET C4.0	
1	EXCAVATE SEWER CONSTRUCTION ROAD PER DETAIL 1, SHEET C4.0
2	INSTALL SEWER PIPE. SIZE AND TYPE PER PLAN. SEE NOTE 5, SHEET C4.0
3	INSTALL 48" SEWER MANHOLE PER MSD 420-1
4	INSTALL CATCH BASIN. SEE SHEET C4.5
5	INSTALL CULVERT. SEE SHEET C4.5
6	CONNECT NEW SEWER PIPE TO EXISTING JUNCTION BOX. CONTRACTOR TO PROVIDE DETAILS & SHOP DRAWINGS TO PROJECT ENGINEER FOR APPROVAL PRIOR TO CONNECTION.
7	PROTECT EXISTING SEWER LATERAL IN PLACE. CONNECT TO NEW SEWER WHEN ACTIVE. SEE PROFILES FOR DETAILS
8	INSTALL CURVED SEWER PIPE. RADIUS PER PLAN. SEE NOTE 5, SHEET C4.0.

CONSTRUCTION NOTES

1. THE EXISTING SEWER PIPES ARE VERY SHALLOW. EXTREME CAUTION IS REQUIRED TO ENSURE THE PIPES ARE PROTECTED DURING CONSTRUCTION. EXISTING SEWER TO REMAIN OPERATIONAL AT ALL TIMES UNTIL THE NEW SEWER IS ACTIVATED.
2. THE EXISTING LATERAL SEWERS SHALL BE TEMPORARILY RE-ROUTED AS NEEDED DURING CONSTRUCTION UNTIL THE NEW SEWER IS ACTIVATED.
3. WASTE MATERIAL FROM THE SEWER AND ROAD CONSTRUCTION SHALL BE REMOVED FROM PRIVATELY OWNED PROPERTIES.
4. CUT SLOPES STEEPER THAN 2:1 SHOULD BE EVALUATED AND APPROVED BY GEOTECHNICAL ENGINEER.
5. ALL TEMPORARY AND NEW SEWER PIPES AND STRUCTURES SHALL BE INSTALLED PER THE SPECIFICATIONS PROVIDED BY THE SEWER PLANT ENGINEER.
6. NEW EASEMENTS ARE NEEDED FOR BOTH EXISTING AND PROPOSED SEWER ACROSS PRIVATE LAND. TO BE COORDINATED BY THE TOWN.

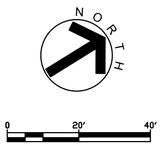

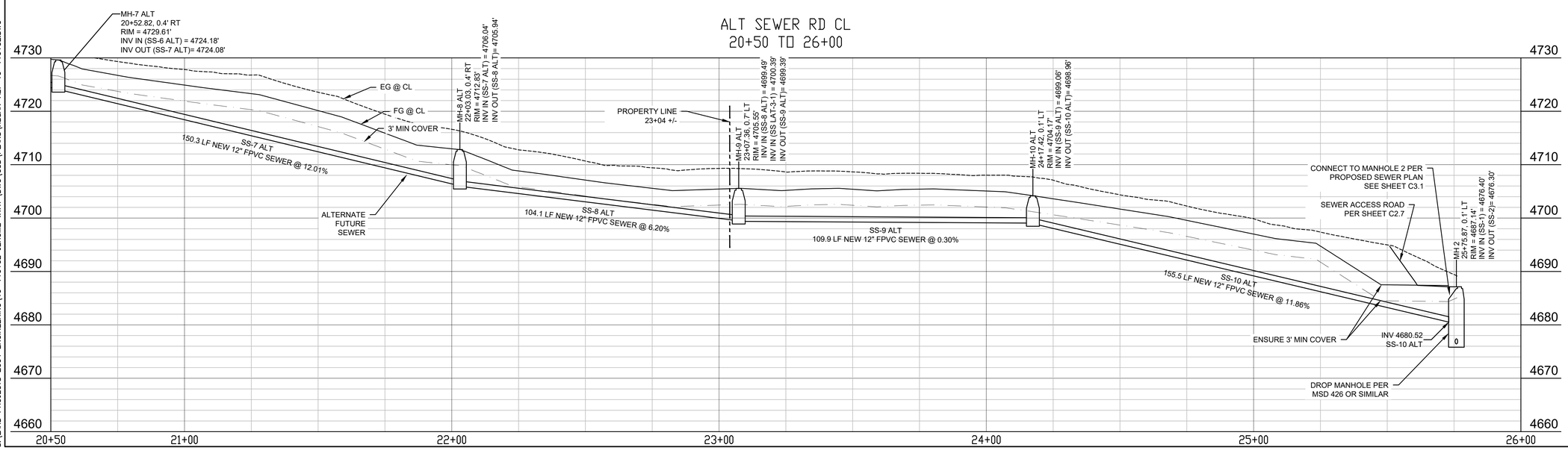

NO	BY	DATE	REVISIONS	DATE	APP

Professional Engineer
49108
KRISHAN GEVINDA GINIGE
10/31/25
REGISTERED
ARIZONA, U.S.A.

PREPARED BY:
DESIGNED BY:
DRAWN BY: NMW
CHECKED BY: KG
SCALE: AS SHOWN
DATE 10/31/25
JOB NO. 19-1101CE

TITLE
ALT SEWER P&P 20+50 TO 26+00

JOB
JEROME WWTP
GRADING & UTILITIES PLANS
YAVAPAI COUNTY AZ

PREPARED BY:
SOUTHWESTERN ENVIRONMENTAL CONSULTANTS, INC
825 COVE PARKWAY
COTTONWOOD, AZ 86326
928-282-7787

SHEET
C4.3
23 OF 99 SHEETS

JOB NO. 19-1101CE
1387

These plans/documents have been prepared using technical knowledge that would be applied by other qualified registrants who practice the same profession in the same area and at the same time. Efforts have been made to be as accurate as possible. However, plans/documents could contain unintentional technical inaccuracies, typographical errors or omissions. Users of these plans/documents should understand that it is highly probable that errors and omissions will occur in any plan/document preparation process.

SEC, Inc., All Rights Reserved. This document is protected under the United States Copyright Act. No part may be reproduced in any form or by any means or stored in a database or retrieval system, without the prior written permission of SEC, Inc.

S:\LAND PROJECTS 2004 ENGINEERING\19-1101CE JEROME WWTP\DWG\C3D\PLANS\XBSAN-ALT-19-1101CE.DWG

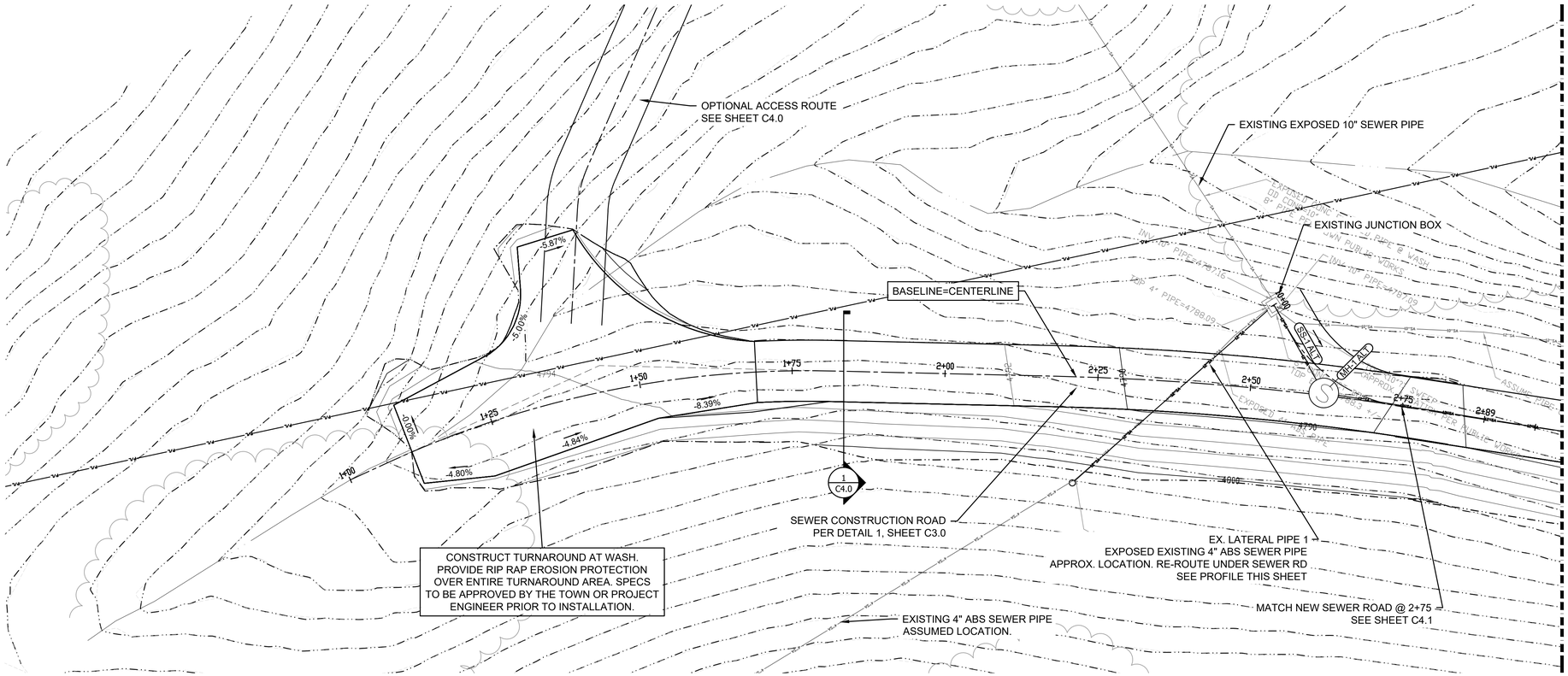
OPTIONAL ACCESS ROUTE
SEE SHEET C4.0
EXISTING EXPOSED 10" SEWER PIPE
EXISTING JUNCTION BOX
BASELINE=CENTERLINE
MATCH SEWER ROAD
SEE SHEET C4.1
-5.87%
-5.00%
-8.39%
-4.84%
-4.80%
-0.00%
1+00
1+25
1+50
1+75
2+00
2+25
2+50
2+75
2+89
4800
4794
4790
4788.09
4787.76
4787.90
4788.98
4789.09
4789.16
4789.19
4789.23
4789.25
4789.26
4789.27
4789.28
4789.29
4789.30
4789.31
4789.32
4789.33
4789.34
4789.35
4789.36
4789.37
4789.38
4789.39
4789.40
4789.41
4789.42
4789.43
4789.44
4789.45
4789.46
4789.47
4789.48
4789.49
4789.50
4789.51
4789.52
4789.53
4789.54
4789.55
4789.56
4789.57
4789.58
4789.59
4789.60
4789.61
4789.62
4789.63
4789.64



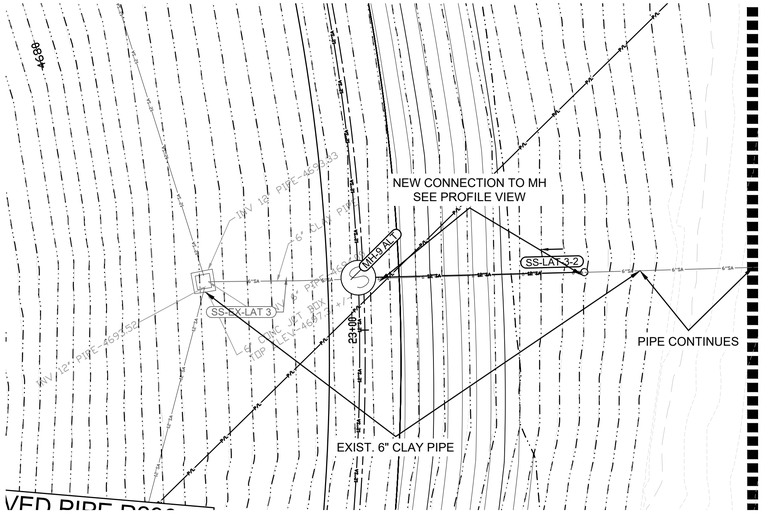



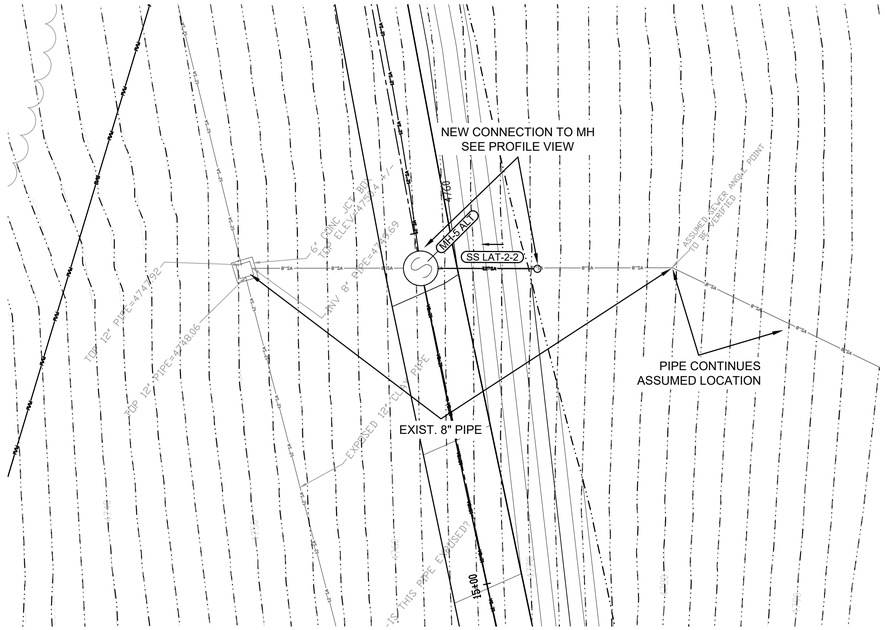

CONSTRUCTION NOTES

1. THE EXISTING SEWER PIPES ARE VERY SHALLOW. EXTREME CAUTION IS REQUIRED TO ENSURE THE PIPES ARE PROTECTED DURING CONSTRUCTION. EXISTING SEWER TO REMAIN OPERATIONAL AT ALL TIMES UNTIL THE NEW SEWER IS ACTIVATED.
2. THE EXISTING LATERAL SEWERS SHALL BE TEMPORARILY RE-ROUTED AS NEEDED DURING CONSTRUCTION UNTIL THE NEW SEWER IS ACTIVATED.
3. WASTE MATERIAL FROM THE SEWER AND ROAD CONSTRUCTION SHALL BE REMOVED FROM PRIVATELY OWNED PROPERTIES.
4. CUT SLOPES STEEPER THAN 2:1 SHOULD BE EVALUATED AND APPROVED BY GEOTECHNICAL ENGINEER.
5. ALL TEMPORARY AND NEW SEWER PIPES AND STRUCTURES SHALL BE INSTALLED PER THE SPECIFICATIONS PROVIDED BY THE SEWER PLANT ENGINEER.
6. NEW EASEMENTS ARE NEEDED FOR BOTH EXISTING AND PROPOSED SEWER ACROSS PRIVATE LAND. TO BE COORDINATED BY THE TOWN.

Item I.

NO	BY	DATE	REVISIONS	DATE	APP



PREPARED BY:
DESIGNED BY:
DRAWN BY: NMW
CHECKED BY: KG
DATE: 10/31/25
SCALE: AS SHOWN
JOB NO. 19-1101CE

TITLE
ALT SEWER LATERAL PROFILES

JOB
JEROME WWTP
GRADING & UTILITIES PLANS
YAVAPAI COUNTY AZ

PREPARED BY:
SOUTHWESTERN ENVIRONMENTAL CONSULTANTS, INC
825 COVE PARKWAY
COTTONWOOD, AZ 86326
928-282-7787

SHEET
C4.5
25 OF 99 SHEETS

JOB NO. 19-1101CE
1389

These plans have been prepared using technical knowledge that would be applied by other qualified registrants who practice the same profession in the same area and at the same time. Efforts have been made to be as accurate as possible. However, plans/documents could contain unintentional technical inaccuracies, typographical errors or omissions. Users of these plans/documents should understand that it is highly probable that errors and omissions will occur in any plan/document preparation process.

SEC, Inc., All Rights Reserved. This document is protected under the United States Copyright Act. No part may be reproduced in any form or by any means or stored in a database or retrieval system, without the prior written permission of SEC, Inc. These plans/documents have been prepared

S:\LAND PROJECTS 2004 ENGINEERING\19-1101CE JEROME WWTP\DWG\C3D\PLANS\XBSAN-ALT-19-1101CE.DWG



EXISTING EQUIPMENT AND COMPONENTS

1. BAR SCREEN
2. 2" PVC POTABLE WATERLINE
3. STORAGE TANKS (ABANDONED)
4. PRIMARY SETTLING TANK
5. DOSING TANK A
6. TRICKLING FILTER (TYP.)
7. REED BEDS (TYP.)
8. DOSING TANK B
9. CONSTRUCTED WETLAND CELLS (TYP.)
10. LEVEL ADJUST SUMP (TYP.)
11. CHLORINE CONTACT CHAMBERS

EXISTING SITE PLAN

NORTH

40 20 0 40 80

NO	BY	DATE	REVISIONS	DATE	APP.

Registered Professional Engineer (Civil) CERTIFICATE NO. 70097 Timothy B. Pierce Signed 12/31/25 ARIZONA, U.S.A. Expires 12/31/28

PREPARED BY: PACE
DESIGNED BY: NE
DRAWN BY: DS, WW
CHECKED BY: TP
SCALE: AS NOTED
DATE: NOV 2025
JOB NO. B614

TITLE: **EXISTING SITE PLAN**

THESE DRAWINGS ARE THE PROPERTY OF P.A.C.E. AND SHALL NOT BE REPRODUCED IN ANY MANNER NOR BE USED FOR CONSTRUCTION UNLESS STAMPED 'ISSUED FOR CONSTRUCTION'.

100% ISSUED FOR BID

JOB: TOWN OF JEROME WASTEWATER TREATMENT PLANT — YAVAPAI CO. AZ

PACE
Advanced Water Engineering
8723 E. VIA DE VENTURA, SUITE A-200, SCOTTSDALE, CA 85258
P: (480) 991-3955 | www.pacewater.com

PREPARED BY: TAYLOR B. PIERCE R.C.E. 70097 DATE

SHEET **M1.0**
26 OF 99 SHEETS

JOB NO. B614

W:\B614\Engineering\B614-30sheets\B614 - M1.0 EXISTING SITE PLAN.dwg - Tab: SITE PLAN - by reddington on 03/10/26 at 2:04:43 PM



CONSTRUCTION NOTES:

1. INSTALL TEMPORARY 12" BYPASS FOR THE EXISTING SEWER INFLUENT LINE.
2. REMOVE EXISTING BAR SCREEN AND RELOCATE UPSTREAM OF THE EXISTING PRIMARY SETTLING TANK.
3. INSTALL TEMPORARY BAR SCREEN AND 12" SEWER BYPASS LINE TO THE PRIMARY SETTLING TANK.
4. DEMOLISH AND REMOVE THE EXISTING TANK SAND FILTER, TANK CLARIFIER, STORAGE BUILDING, AND STATIC SCREEN.
5. CUT AND CAP EXISTING 2" WATER SERVICE TO THE WWTP.
6. DEMOLISH AND REMOVE THE EXISTING STORAGE SHED.
7. CUT AND CAP PIPE FROM THE PRIMARY SETTLING TANK TO THE EAST REED BED.
8. CUT AND CAP LINE FROM DOSING TANK A TO EAST TRICKLING FILTER.
9. LOCATE, CUT AND CAP LINE FROM SAND FILTER TANK.
10. CUT, CAP AND PROTECT IN PLACE EAST TRICKLING FILTER.
11. CUT AND CAP DRAIN LINE FROM EAST TRICKLING FILTER UPSTREAM OF WEST TRICKLING FILTER LINE TIE-IN LOCATION.
12. REMOVE ALL EXISTING PIPING WITHIN THE EAST REED BED.
13. CUT AND CAP EAST REED BED DRAIN LINE AT THE EXISTING MANHOLE.
14. PROTECT IN PLACE.
15. REMOVE APPROX. 140 LF OF EXISTING FENCE.

NOTES:
1. CONTRACTOR TO PROVIDE A SEQUENCE OF CONSTRUCTION TO ENGINEER FOR REVIEW PRIOR TO CONSTRUCTION. CONTRACTOR SHALL BE RESPONSIBLE FOR ALL MEANS AND METHODS.

DEMOLITION PLAN PH-I

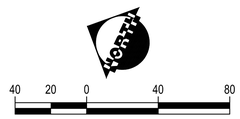

NO	BY	DATE	REVISIONS	DATE	APP.

THESE DRAWINGS ARE THE PROPERTY OF P.A.C.E. AND SHALL NOT BE REPRODUCED IN ANY MANNER NOR BE USED FOR CONSTRUCTION UNLESS STAMPED 'ISSUED FOR CONSTRUCTION'.

Registered Professional Engineer (Civil) CERTIFICATE NO. 70097 Taylor B. Pierce Signed ARIZONA, U.S.A. Expires 12/31/28

PREPARED BY:	PACE
DESIGNED BY:	NE
DRAWN BY:	DS, WW
CHECKED BY:	TP
SCALE:	AS NOTED
DATE	NOV 2025
JOB NO.	B614

TITLE: **DEMOLITION PLAN PH-I**

JOB: TOWN OF JEROME
WASTEWATER
TREATMENT PLANT
YAVAPAI CO. AZ

100% ISSUED FOR BID

PREPARED BY: TAYLOR B. PIERCE R.C.E 70097 DATE

PACE
Advanced Water Engineering
8723 E. Via de Commercio, Suite 2-114 Scottsdale, CA 85258
P. (408) 991-3395 | www.pacewater.com

SHEET
M1.1
27 OF 99 SHEETS

JOB NO. B614

W:\B614\Engineering\B614-30\sheets\B614 - M1.1 DEMO PLANS PH-I.dwg - Tab: M1.1 - by reddington on 11/17/25 at 10:25:59 AM



CONSTRUCTION NOTES:

1. REMOVE TEMPORARY BYPASS PIPING FROM THE INFLUENT LINE ONCE FLOW HAS BEEN DIVERTED THROUGH NEW WWTP.
2. DEMOLISH AND REMOVE EXISTING PRIMARY SETTLING TANK. REMOVE ALL ABOVE GRADE PIPING & CAP AND ABANDON IN PLACE ALL BELOW GRADE PIPING.
3. DEMOLISH AND REMOVE EXISTING DOSING TANK A. REMOVE ALL ABOVE GRADE PIPING & CAP AND ABANDON IN PLACE ALL BELOW GRADE PIPING.
4. REMOVE ALL ABOVE GRADE PIPING & CAP AND ABANDON IN PLACE ALL BELOW GRADE PIPING. ABANDON IN PLACE WEST TRICKLING FILTER.
5. CAP AND ABANDON IN PLACE EXISTING SEPTIC TANK. REMOVE ALL ABOVE GRADE PIPING & CAP AND ABANDON IN PLACE ALL BELOW GRADE PIPING.
6. ABANDON IN PLACE EXISTING WEST REED BED. REMOVE ALL ABOVE GRADE PIPING & CAP AND ABANDON IN PLACE ALL BELOW GRADE PIPING.
7. CAP AND ABANDON IN PLACE EXISTING MANHOLE. CUT AND CAP ALL PIPING BELOW GRADE AND ABANDON IN PLACE.
8. CAP AND ABANDON IN PLACE EXISTING DOSING TANK B. REMOVE ALL ABOVE GRADE PIPING & CAP AND ABANDON IN PLACE ALL BELOW GRADE PIPING.
9. ABANDON IN PLACE EXISTING WEST WETLAND CELL. REMOVE ALL ABOVE GRADE PIPING & CAP AND ABANDON IN PLACE ALL BELOW GRADE PIPING. REUSE TRAFFIC BARRIER FOR NEW OVERFLOW BASIN.
10. REMOVE ALL PIPING WITHIN THE THREE EAST WETLAND BASINS & CUT, CAP, AND ABANDON IN PLACE ALL PIPING OUTSIDE THE BASINS.
11. CAP AND ABANDON IN PLACE EAST LEVEL ADJUST SUMPS. CUT, CAP AND ABANDON IN PLACE ALL BELOW GRADE PIPING.
12. CAP AND ABANDON IN PLACE WEST LEVEL ADJUST SUMP. CUT, CAP AND ABANDON IN PLACE ALL BELOW GRADE PIPING.
13. CAP AND ABANDON IN PLACE EXISTING CHLORINE CONTACT CHAMBER. CUT, CAP AND ABANDON IN PLACE ALL BELOW GRADE PIPING.

DEMOLITION PLAN PH-II

NORTH

40 20 0 40 80

NO	BY	DATE	REVISIONS	DATE	APP.

THESE DRAWINGS ARE THE PROPERTY OF P.A.C.E. AND SHALL NOT BE REPRODUCED IN ANY MANNER NOR BE USED FOR CONSTRUCTION UNLESS STAMPED 'ISSUED FOR CONSTRUCTION'.

Registered Professional Engineer (Civil) CERTIFICATE NO. 70097 TAYLOR B. PIERCE Signed ARIZONA, U.S.A. Expires 12/31/28

PREPARED BY: PACE
DESIGNED BY: NE
DRAWN BY: DS, WW
CHECKED BY: TP
SCALE: AS NOTED
DATE: NOV 2025
JOB NO.: B614

TITLE: DEMOLITION PLAN PH-II

JOB: TOWN OF JEROME WASTEWATER TREATMENT PLANT — YAVAPAI CO. AZ

100% ISSUED FOR BID

PREPARED BY: TAYLOR B. PIERCE R.C.E 70097 DATE

PACE
Advanced Water Engineering
8723 E. VIA DE COMMERCIO, 1ST FLOOR | SCOTTSDALE, CA 85258
P. (480) 991-3595 | www.pacewater.com

SHEET
M1.2
28 OF 99 SHEETS

JOB NO. B614

W:\B614\Engineering\B614-30sheet\B614 - M1.2 DEMO PLANS PHII.dwg - Tab: M1.2 - by reddington on 03/10/26 at 12:57:22 PM

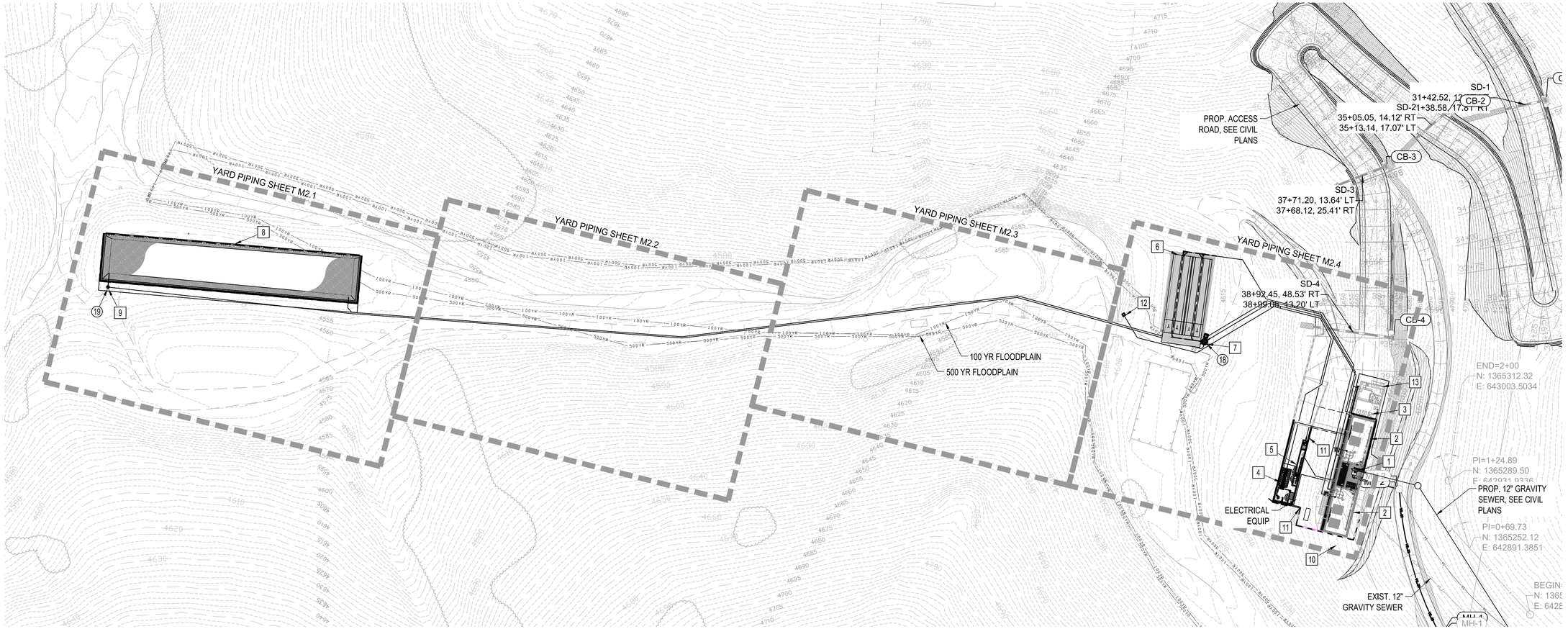

CONSTRUCTION NOTES:

1. HEADWORKS PER SHEET M3.0.
2. SEQUENCING BATCH REACTOR PER SHEET M3.0.
3. BLOWER ROOM PER SHEET M7.0.
4. DEWATERING PAD PER SHEET M5.3.
5. CHLORINE CONTACT CHANNEL PER SHEET M4.0.
6. SLUDGE DRYING BED PER SHEET M5.0.
7. DRYING BED LIFT STATION PER SHEET M5.2.
8. EMERGENCY OVERFLOW BASIN PER SHEET M6.0.
9. PACKAGED OVERFLOW LIFT STATION PER DETAIL A SHEET M8.2.
10. REPLACE 140± LF OF PERIMETER FENCING TO MATCH.
11. RETAINING WALL PER STRUCTURAL SHEET S2.10.
12. PRECAST CONCRETE EFFLUENT SAMPLE BOX PER SHEET M5.0.
13. OPERATIONS ROOM PER SHEET M7.0.

PROPOSED SITE PLAN

NORTH

40 20 0 40 80

100% ISSUED FOR BID

CALL TWO WORKING DAYS BEFORE YOU DIG
602-263-1100
1-800-STAKE-IT
(OUTSIDE MARICOPA COUNTY)

NO	BY	DATE	REVISIONS	DATE	APP.

Registered Professional Engineer (Civil) CERTIFICATE NO. 70097 Taylor B. Pierce Signed ARIZONA, U.S.A. Expires 12/31/28

THESE DRAWINGS ARE THE PROPERTY OF P.A.C.E. AND SHALL NOT BE REPRODUCED IN ANY MANNER NOR BE USED FOR CONSTRUCTION UNLESS STAMPED 'ISSUED FOR CONSTRUCTION'.

PREPARED BY: PACE
DESIGNED BY: NE
DRAWN BY: DS, WW
CHECKED BY: TP
SCALE: AS NOTED
DATE: NOV 2025
JOB NO.: B614

TITLE: **PROPOSED SITE PLAN**

JOB: TOWN OF JEROME WASTEWATER TREATMENT PLANT — YAVAPAI CO. AZ

PREPARED BY: TAYLOR B. PIERCE R.C.E 70097 DATE
PACE
Advanced Water Engineering
8123 E. VIA DE COMERCIO, SUITE A, SCOTTSDALE, CA 85258
P: (480) 991-3595 | W: www.pacewater.com

SHEET **M2.0**
29 OF 99 SHEETS

JOB NO. B614

W:\B614\Engineering\B614-33\sheets\B614 - M2.0 SITE PLANS.dwg - Tab: SITE PLAN - by redlington on 03/10/26 at 2:18:11 PM

CONSTRUCTION NOTES:

1. INSTALL 2" SCH. 80 PVC PIPE.
2. INSTALL 4" C900 PVC PIPE.
3. INSTALL 4" - 45° D.I. BEND W/ MJ CONNECTIONS W/ THRUST BLOCKS PER DETAIL C SHEET M8.0.
4. REPLACE 10± LF OF PERIMETER FENCING TO MATCH.
5. INSTALL 2" PVC COUPLING.
6. TRENCH AND BACKFILL PER DETAIL D, SHEET M8.1.
7. CONTRACTOR TO PROVIDE FITTINGS AS REQUIRED TO CONNECT TO LIFT STATION DISCHARGE PIPING

EARTHWORK ESTIMATE (UNADJUSTED)

CUT	1,465	Cu. Yd.
FILL	0	Cu. Yd.
NET	1,465	Cu. Yd. <CUT>

CONTRACTOR SHALL VERIFY EARTHWORK QUANTITIES

POINT TABLE			
PNT. #	NORTHING	EASTING	DESCRIPTION
1	1366308.34	642657.44	OF BSN BTM CNR
2	1366131.64	642724.07	OF BSN BTM CNR
3	1366299.09	642632.53	OF BSN BTM CNR
4	1366121.64	642697.12	OF BSN BTM CNR
5	1366295.09	642622.30	LS CTR

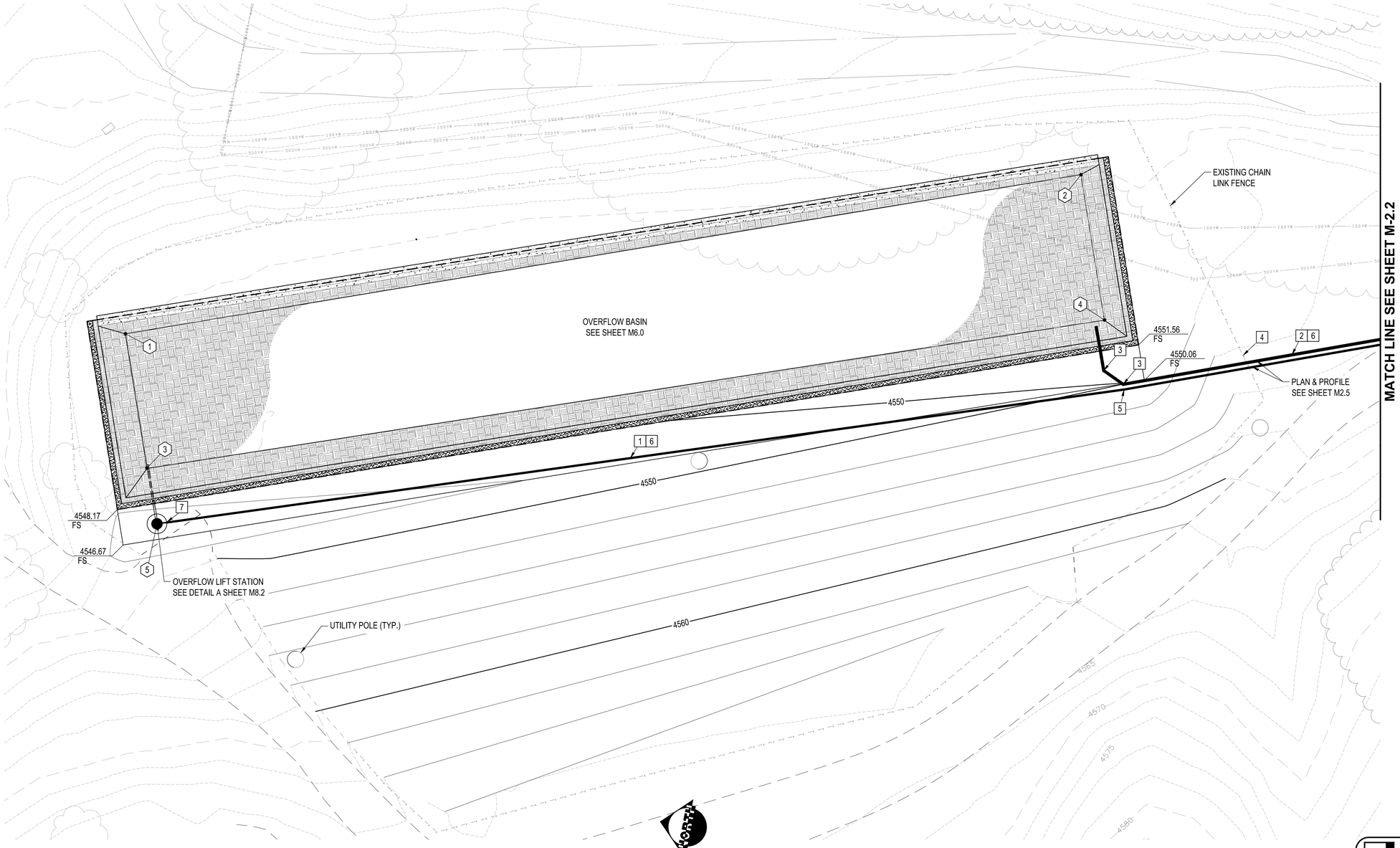

YARD PIPING & GRADING PLAN
SCALE: 1" = 10'

CALL TWO WORKING DAYS BEFORE YOU DIG
602-263-1100
1-800-STAKE-IT
(OUTSIDE MARICOPA COUNTY)

100% ISSUED FOR BID

NO	BY	DATE	REVISIONS	DATE	APP.

Registered Professional Engineer (Civil) CERTIFICATE NO. 70097 TAYLOR B. PIERCE Signed ARIZONA, U.S.A. Expires 12/31/28

THESE DRAWINGS ARE THE PROPERTY OF P.A.C.E. AND SHALL NOT BE REPRODUCED IN ANY MANNER NOR BE USED FOR CONSTRUCTION UNLESS STAMPED 'ISSUED FOR CONSTRUCTION'.

PREPARED BY: PACE
DESIGNED BY: NE
DRAWN BY: DS, WW
CHECKED BY: TP
SCALE: AS NOTED
DATE: NOV 2025
JOB NO.: B614

TITLE: YARD PIPING & GRADING PLAN

JOB: TOWN OF JEROME WASTEWATER TREATMENT PLANT
YAVAPAI CO. AZ

PREPARED BY: TAYLOR B. PIERCE R.C.E 70097 DATE
PACE
Advanced Water Engineering
8723 E. Via de Ventura Suite 110 SCOTTSDALE, CA 85258
P: (480) 991-3595 | www.pacewater.com

SHEET M2.1
30 OF 99 SHEETS

JOB NO. B614

W:\B614 Engineering\B614-30\sheets\B614 - M2.1 YARD PIPING - OLD VERSION RESTORED.dwg - Tab: M2.1 - by reddington on 03/10/26 at 2:03:53 PM

CONSTRUCTION NOTES:

1. INSTALL 2" SCH. 80 PVC PIPE.
2. INSTALL 2" - 11.25° SCH. 80 PVC BEND.
3. INSTALL 4" C900 PVC PIPE.
4. INSTALL 4" - 11.25° D.I. BEND W/ MJ CONNECTIONS W/ THRUST BLOCKS PER DETAIL C SHEET M8.0.
5. TRENCH AND BACKFILL PER DETAIL D, SHEET M8.1.

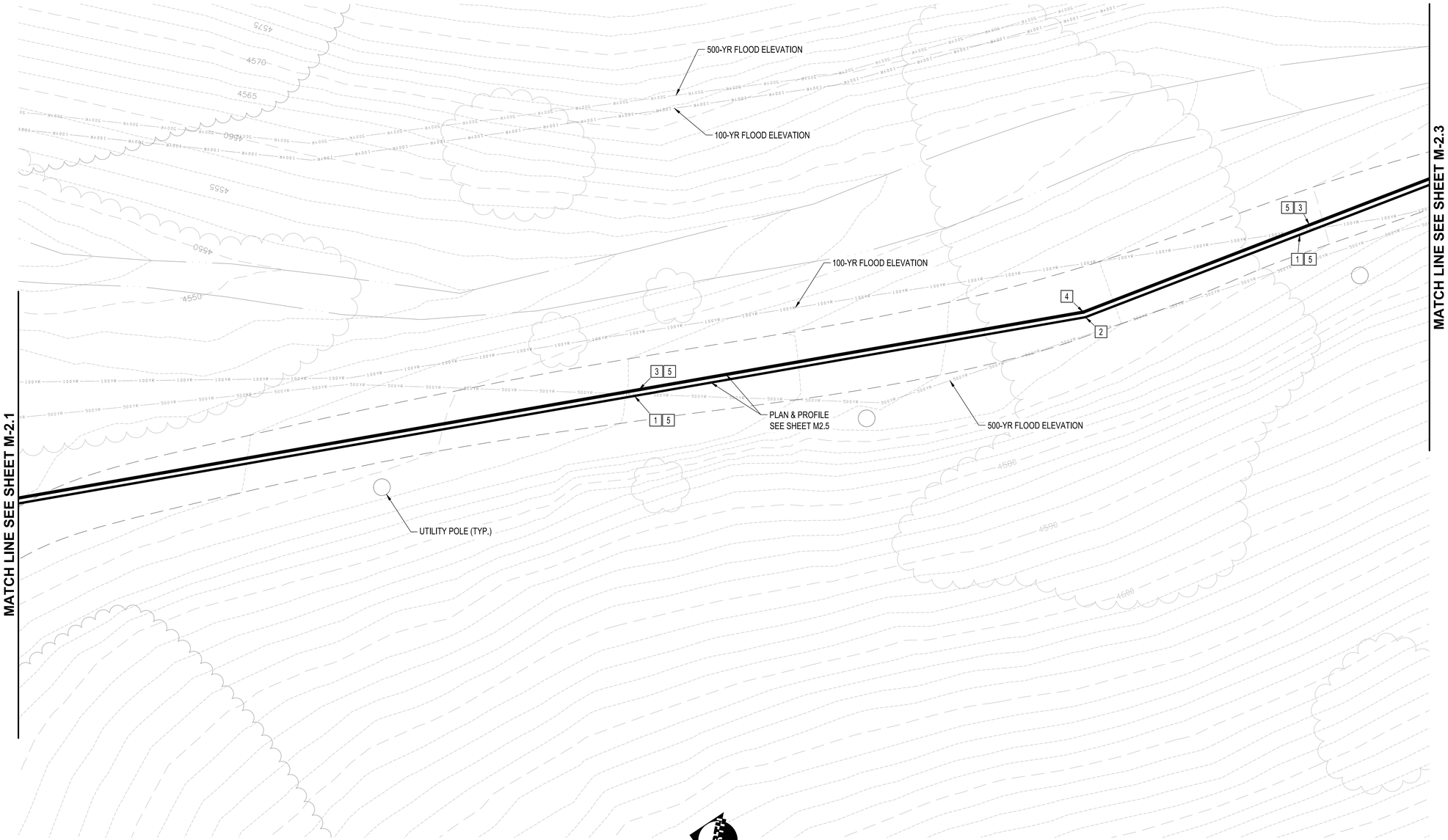

YARD PIPING PLAN
SCALE: 1" = 10'

NORTH
10 5 0 10 20

CALL TWO WORKING DAYS BEFORE YOU DIG
602-263-1100
1-800-STAKE-IT
(OUTSIDE MARICOPA COUNTY)

100% ISSUED FOR BID

NO	BY	DATE	REVISIONS	DATE	APP.

Registered Professional Engineer (Civil)
CERTIFICATE NO. 70097
TAYLOR B. PIERCE
ARIZONA U.S.A.
Signed
Expires 12/31/28

PREPARED BY: PACE
DESIGNED BY: NE
DRAWN BY: DS, WW
CHECKED BY: TP
SCALE: AS NOTED
DATE: NOV 2025
JOB NO. B614

THESE DRAWINGS ARE THE PROPERTY OF P.A.C.E. AND SHALL NOT BE REPRODUCED IN ANY MANNER NOR BE USED FOR CONSTRUCTION UNLESS STAMPED 'ISSUED FOR CONSTRUCTION'.

TITLE
YARD PIPING PLAN

JOB
TOWN OF JEROME
WASTEWATER
TREATMENT PLANT
YAVAPAI CO. AZ

PREPARED BY:
TAYLOR B. PIERCE R.C.E 70097 DATE

PACE
Advanced Water Engineering
8723 E. Via de Commercio, Suite 100, SCOTTSDALE, CA 85258
P: (480) 991-3595 | www.pacewater.com

SHEET
M2.2
31 OF 99 SHEETS

JOB NO. B614

W:\B614\Engineering\B614-30\sheets\B614 - M2.1 YARD PIPING - OLD VERSION RESTORED.dwg - Tab: M2.2 - by reddington on 03/10/26 at 2:05:53 PM

CONSTRUCTION NOTES:

1. INSTALL 2" SCH. 80 PVC PIPE.
2. INSTALL 2" - 22.5° SCH. 80 PVC BEND.
3. INSTALL 4" D.I. PIPE.
4. INSTALL 4" C900 PVC PIPE.
5. INSTALL 4" - 22.5° D.I. BEND W/ MJ FITTINGS W/ THRUST BLOCKS PER DETAIL C SHEET M8.0.
6. INSTALL CLEANOUT PER DETAIL I SHEET M8.3.
7. INSTALL PVC TO DIP TRANSITION COUPLING, ROMAC OR EQUAL.
8. TRENCH AND BACKFILL PER DETAIL D, SHEET M8.1.

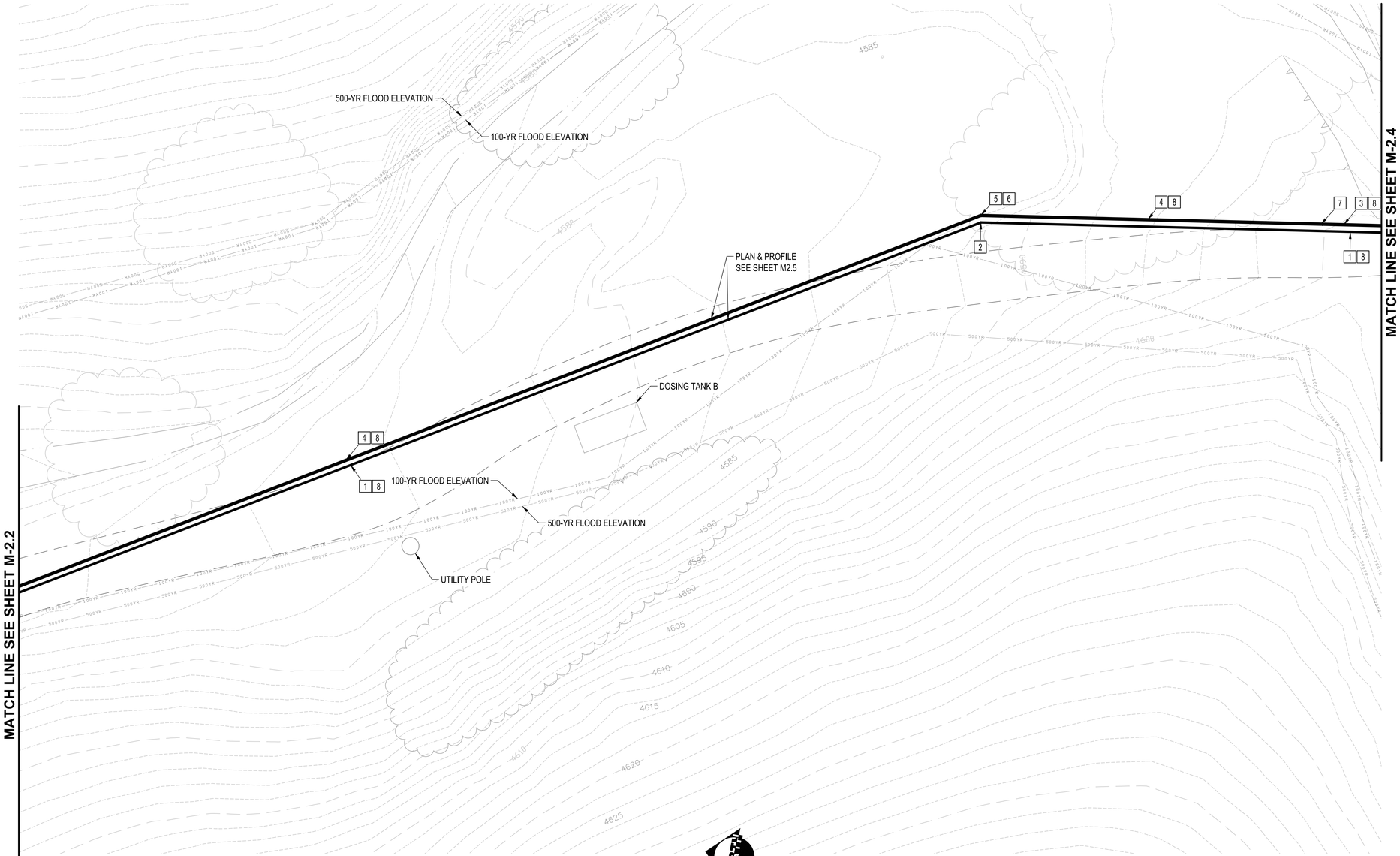

YARD PIPING PLAN
SCALE: 1" = 10'

NORTH
10 5 0 10 20

NO	BY	DATE	REVISIONS	DATE	APP.

THESE DRAWINGS ARE THE PROPERTY OF P.A.C.E. AND SHALL NOT BE REPRODUCED IN ANY MANNER NOR BE USED FOR CONSTRUCTION UNLESS STAMPED 'ISSUED FOR CONSTRUCTION'.

Registered Professional Engineer (Civil) CERTIFICATE NO. 70097 TAYLOR B. PIERCE Signed ARIZONA, U.S.A. Expires 12/31/28

PREPARED BY: PACE
DESIGNED BY: NE
DRAWN BY: DS, WW
CHECKED BY: TP
SCALE: AS NOTED
DATE: NOV 2025
JOB NO.: B614

TITLE: YARD PIPING

JOB: TOWN OF JEROME WASTEWATER TREATMENT PLANT
YAVAPAI CO. AZ

100% ISSUED FOR BID

PREPARED BY:
PACE
Advanced Water Engineering
8723 E. VIA de COMMERCIO, BLDG. 1A, SCOTTSDALE, CA 85258
P: (480) 991-3595 | www.pacewater.com
TAYLOR B. PIERCE R.C.E. 70097 DATE

SHEET
M2.3
32 OF 99 SHEETS

JOB NO. B614

W:\B614\Engineering\B614-3\sheets\B614 - M2.1 YARD PIPING - OLD VERSION RESTORED.dwg - Tab: M2.3 - by neddington on 03/10/26 at 2:03:53 PM

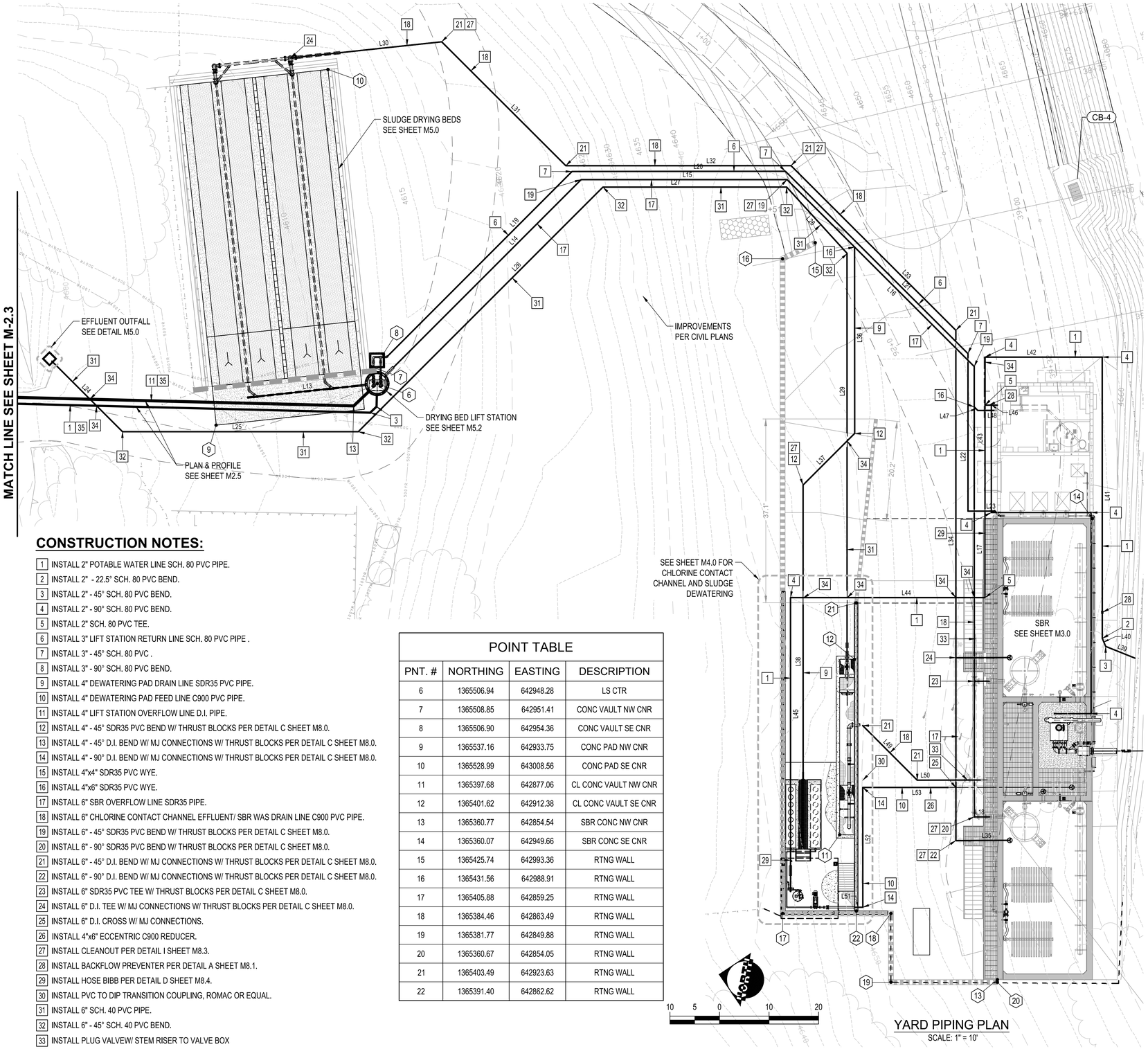

YARD PIPING PLAN
SCALE: 1" = 10'

CONSTRUCTION NOTES:

1. INSTALL 2" POTABLE WATER LINE SCH. 80 PVC PIPE.
2. INSTALL 2" - 22.5° SCH. 80 PVC BEND.
3. INSTALL 2" - 45° SCH. 80 PVC BEND.
4. INSTALL 2" - 90° SCH. 80 PVC BEND.
5. INSTALL 2" SCH. 80 PVC TEE.
6. INSTALL 3" LIFT STATION RETURN LINE SCH. 80 PVC PIPE .
7. INSTALL 3" - 45° SCH. 80 PVC .
8. INSTALL 3" - 90° SCH. 80 PVC BEND.
9. INSTALL 4" DEWATERING PAD DRAIN LINE SDR35 PVC PIPE.
10. INSTALL 4" DEWATERING PAD FEED LINE C900 PVC PIPE.
11. INSTALL 4" LIFT STATION OVERFLOW LINE D.I. PIPE.
12. INSTALL 4" - 45° SDR35 PVC BEND W/ THRUST BLOCKS PER DETAIL C SHEET M8.0.
13. INSTALL 4" - 45° D.I. BEND W/ MJ CONNECTIONS W/ THRUST BLOCKS PER DETAIL C SHEET M8.0.
14. INSTALL 4" - 90° D.I. BEND W/ MJ CONNECTIONS W/ THRUST BLOCKS PER DETAIL C SHEET M8.0.
15. INSTALL 4"x4" SDR35 PVC WYE.
16. INSTALL 4"x6" SDR35 PVC WYE.
17. INSTALL 6" SBR OVERFLOW LINE SDR35 PIPE.
18. INSTALL 6" CHLORINE CONTACT CHANNEL EFFLUENT/ SBR WAS DRAIN LINE C900 PVC PIPE.
19. INSTALL 6" - 45° SDR35 PVC BEND W/ THRUST BLOCKS PER DETAIL C SHEET M8.0.
20. INSTALL 6" - 90° SDR35 PVC BEND W/ THRUST BLOCKS PER DETAIL C SHEET M8.0.
21. INSTALL 6" - 45° D.I. BEND W/ MJ CONNECTIONS W/ THRUST BLOCKS PER DETAIL C SHEET M8.0.
22. INSTALL 6" - 90° D.I. BEND W/ MJ CONNECTIONS W/ THRUST BLOCKS PER DETAIL C SHEET M8.0.
23. INSTALL 6" SDR35 PVC TEE W/ THRUST BLOCKS PER DETAIL C SHEET M8.0.
24. INSTALL 6" D.I. TEE W/ MJ CONNECTIONS W/ THRUST BLOCKS PER DETAIL C SHEET M8.0.
25. INSTALL 6" D.I. CROSS W/ MJ CONNECTIONS.
26. INSTALL 4"x6" ECCENTRIC C900 REDUCER.
27. INSTALL CLEANOUT PER DETAIL I SHEET M8.3.
28. INSTALL BACKFLOW PREVENTER PER DETAIL A SHEET M8.1.
29. INSTALL HOSE BIBB PER DETAIL D SHEET M8.4.
30. INSTALL PVC TO DIP TRANSITION COUPLING, ROMAC OR EQUAL.
31. INSTALL 6" SCH. 40 PVC PIPE.
32. INSTALL 6" - 45° SCH. 40 PVC BEND.
33. INSTALL PLUG VALVEW/ STEM RISER TO VALVE BOX
34. POTABLE WATER & SEWER SEPERATION PER DETAIL F SHEET M8.3
35. TRENCH AND BACKFILL PER DETAIL D, SHEET M8.1.

POINT TABLE

PNT. #	NORTHING	EASTING	DESCRIPTION
6	1365506.94	642948.28	LS CTR
7	1365508.85	642951.41	CONC VAULT NW CNR
8	1365506.90	642954.36	CONC VAULT SE CNR
9	1365537.16	642933.75	CONC PAD NW CNR
10	1365528.99	643008.56	CONC PAD SE CNR
11	1365397.68	642877.06	CL CONC VAULT NW CNR
12	1365401.62	642912.38	CL CONC VAULT SE CNR
13	1365360.77	642854.54	SBR CONC NW CNR
14	1365360.07	642949.66	SBR CONC SE CNR
15	1365425.74	642993.36	RTNG WALL
16	1365431.56	642988.91	RTNG WALL
17	1365405.88	642859.25	RTNG WALL
18	1365384.46	642863.49	RTNG WALL
19	1365381.77	642849.88	RTNG WALL
20	1365360.67	642854.05	RTNG WALL
21	1365403.49	642923.63	RTNG WALL
22	1365391.40	642862.62	RTNG WALL

LINE DATA

LINE #	DISTANCE	BEARING	START POINT	END POINT
L13	22.48'	S17°18'33"E	N 1365530.33, E 642940.99	N 1365508.86, E 642947.68
L14	56.23'	S56°12'23"E	N 1365505.83, E 642949.94	N 1365474.55, E 642996.68
L15	41.55'	S11°12'16"E	N 1365474.55, E 642996.68	N 1365433.79, E 643004.75
L16	53.40'	S33°46'31"W	N 1365433.79, E 643004.75	N 1365389.40, E 642975.07
L17	90.91'	S78°47'08"W	N 1365389.40, E 642975.07	N 1365371.72, E 642885.90
L18	3.06'	S11°12'16"E	N 1365371.72, E 642885.90	N 1365368.72, E 642886.49
L19	52.66'	S56°14'49"E	N 1365505.95, E 642954.14	N 1365476.69, E 642997.93
L20	43.07'	S11°14'49"E	N 1365476.69, E 642997.93	N 1365434.44, E 643006.33
L21	52.08'	S33°46'38"W	N 1365434.44, E 643006.33	N 1365391.15, E 642977.37
L22	31.78'	S78°47'08"W	N 1365391.15, E 642977.37	N 1365384.97, E 642946.20
L23	5.63'	S11°12'52"E	N 1365384.97, E 642946.20	N 1365379.45, E 642947.29
L24	19.82'	S33°47'52"W	N 1365571.96, E 642939.80	N 1365555.49, E 642928.78
L25	47.61'	S11°12'09"E	N 1365555.49, E 642928.78	N 1365508.79, E 642938.03
L26	69.82'	S56°12'21"E	N 1365508.79, E 642938.03	N 1365469.95, E 642996.05
L27	37.08'	S11°11'56"E	N 1365469.95, E 642996.05	N 1365433.58, E 643003.25
L28	18.14'	S36°24'57"W	N 1365433.58, E 643003.25	N 1365418.98, E 642992.48
L29	91.27'	S78°48'35"W	N 1365418.98, E 642992.48	N 1365401.27, E 642902.95
L30	30.72'	S17°17'44"E	N 1365536.89, E 643009.37	N 1365507.56, E 643018.50
L31	35.41'	S33°46'20"W	N 1365507.56, E 643018.50	N 1365478.13, E 642998.82
L32	45.45'	S11°13'40"E	N 1365478.13, E 642998.82	N 1365433.55, E 643007.67
L33	47.02'	S33°47'44"W	N 1365433.55, E 643007.67	N 1365394.47, E 642981.52
L34	103.00'	S78°47'25"W	N 1365394.47, E 642981.52	N 1365374.45, E 642880.48
L35	10.88'	S11°24'18"E	N 1365374.45, E 642880.48	N 1365363.79, E 642882.63
L36	37.61'	N78°47'08"E	N 1365410.46, E 642957.14	N 1365417.77, E 642994.04
L37	14.74'	S56°12'52"E	N 1365418.65, E 642944.90	N 1365410.46, E 642957.14
L38	59.50'	N78°47'08"E	N 1365407.08, E 642886.53	N 1365418.65, E 642944.90
L39	6.37'	S10°40'27"W	N 1365352.41, E 642924.80	N 1365346.15, E 642923.62
L40	1.74'	S55°40'27"W	N 1365353.39, E 642926.23	N 1365352.41, E 642924.80
L41	56.80'	S78°47'44"W	N 1365364.43, E 642981.96	N 1365353.39, E 642926.23
L42	23.67'	S11°12'16"E	N 1365387.65, E 642977.36	N 1365364.43, E 642981.96
L43	48.55'	N78°47'44"E	N 1365378.21, E 642929.73	N 1365387.65, E 642977.36
L44	39.25'	S11°12'16"E	N 1365416.71, E 642922.10	N 1365378.21, E 642929.73
L45	59.28'	N78°47'44"E	N 1365405.19, E 642863.95	N 1365416.71, E 642922.10
L46	2.50'	N11°12'16"W	N 1365383.31, E 642968.33	N 1365385.76, E 642967.84
L47	1.00'	N33°47'44"E	N 1365386.98, E 642966.52	N 1365387.82, E 642967.07
L48	3.25'	N11°11'39"W	N 1365383.80, E 642967.15	N 1365386.98, E 642966.52
L49	15.57'	S33°47'44"W	N 1365397.42, E 642899.59	N 1365384.48, E 642890.93
L50	14.13'	S11°20'19"E	N 1365384.48, E 642890.93	N 1365370.63, E 642893.71
L51	1.67'	S11°12'52"E	N 1365391.90, E 642863.29	N 1365390.26, E 642863.62
L52	24.20'	N78°47'08"E	N 1365390.26, E 642863.62	N 1365394.97, E 642887.36
L53	42.17'	S11°12'24"E	N 1365394.97, E 642887.36	N 1365353.60, E 642895.55

NO	BY	DATE	REVISIONS	DATE	APP.

Registered Professional Engineer (Civil)
CERTIFICATE NO. 71527
Timothy R. Pace
Signed
ARIZONA, U.S.A.
Expires 12/31/28

THESE DRAWINGS ARE THE PROPERTY OF P.A.C.E. AND SHALL NOT BE REPRODUCED IN ANY MANNER NOR BE USED FOR CONSTRUCTION UNLESS STAMPED 'ISSUED FOR CONSTRUCTION'.

PREPARED BY: PACE
DESIGNED BY: NE
DRAWN BY: DS, WW
CHECKED BY: TP
SCALE: AS NOTED
DATE: NOV 2025
JOB NO.: B614

TITLE: YARD PIPING

JOB: TOWN OF JEROME
WASTEWATER
TREATMENT PLANT
YAVAPAI CO. AZ

100% ISSUED FOR BID

PACE
Advanced Water Engineering
8723 E. Via de Commercio, Suite 104, Scottsdale, AZ 85258
P: (480) 991-3595 | www.pacewater.com
R.C.E 70097
PREPARED BY: TAYLOR B. PIERCE
DATE

SHEET M2.4
33 OF 99 SHEETS

JOB NO. B614

CALL TWO WORKING DAYS BEFORE YOU DIG
602-263-1100
1-800-STAKE-IT
(OUTSIDE MARICOPA COUNTY)

W:\B614-Engineering\B614-3\sheets\B614 - M2.1 YARD PIPING - OLD VERSION RESTORED.dwg - Tab: M2.4 - by reddington on 03/10/26 at 2:03:53 PM

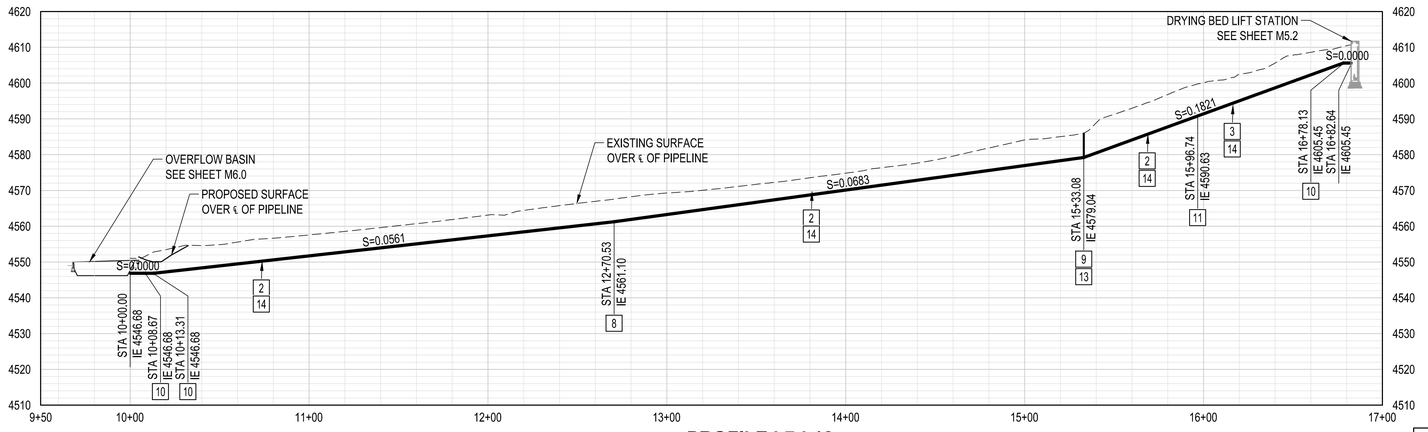

PROFILE L7-L12

SCALE: HORZ: 1" = 40'
VERT: 1" = 20'

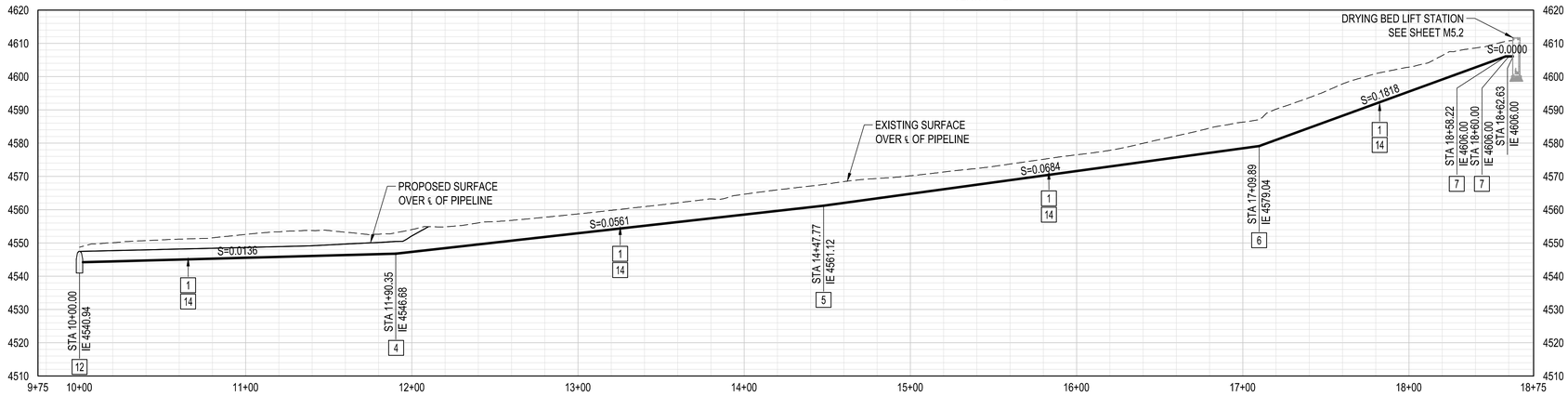

PROFILE L1-L6

SCALE: HORZ: 1" = 40'
VERT: 1" = 20'

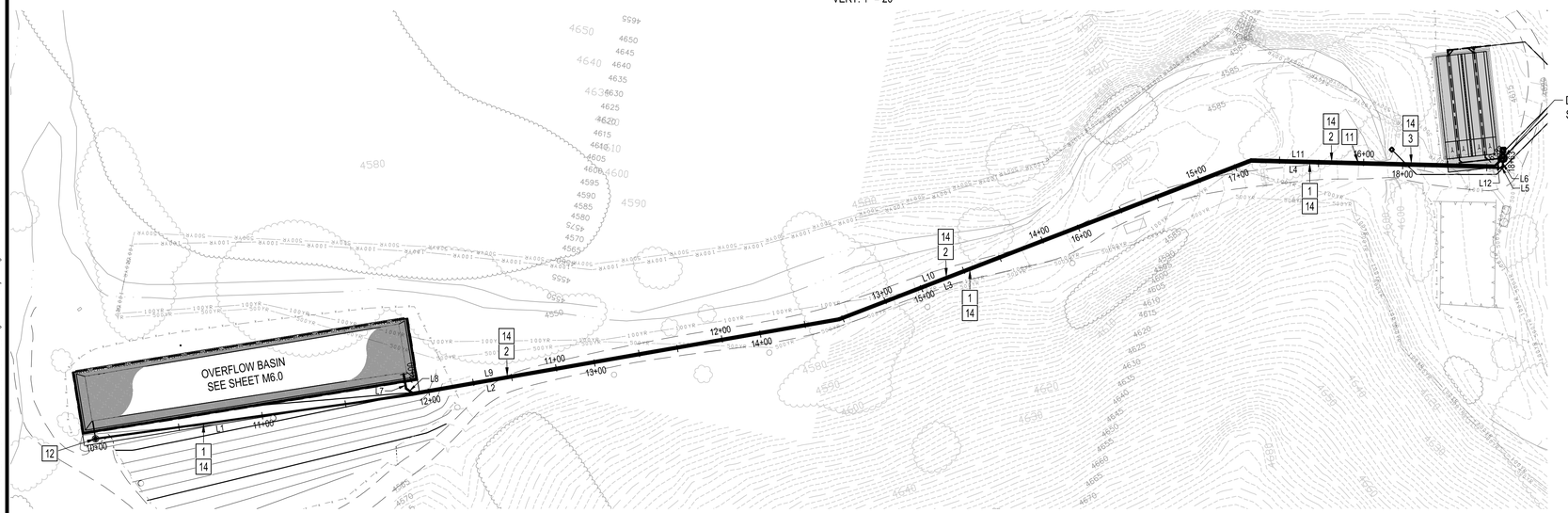

PLAN

SCALE: 1" = 40'

CONSTRUCTION NOTES:

1. INSTALL 2" SCH. 80 PVC PIPE.
2. INSTALL 4" C900 PVC PIPE.
3. INSTALL 4" D.I. PIPE.
4. INSTALL 2" PVC COUPLING.
5. INSTALL 2" - 11.25° SCH. 80 PVC BEND.
6. INSTALL 2" - 22.5° SCH. 80 PVC BEND.
7. INSTALL 2" - 45° SCH. 80 PVC BEND.
8. INSTALL 4" - 11.25° D.I. BEND W/ MJ CONNECTIONS W/ THRUST BLOCKS PER DETAIL C SHEET M8.0.
9. INSTALL 4" - 22.5° D.I. BEND W/ MJ CONNECTIONS W/ THRUST BLOCKS PER DETAIL C SHEET M8.0.
10. INSTALL 4" - 45° D.I. BEND W/ MJ CONNECTIONS W/ THRUST BLOCKS PER DETAIL C SHEET M8.0.
11. INSTALL PVC TO DIP TRANSITION COUPLING, ROMAC OR EQUAL.
12. INSTALL OVERFLOW LIFT STATION PER DETAIL A, SHEET M8.2.
13. INSTALL CLEANOUT PER DETAIL I SHEET M8.3.
14. TRENCH AND BACKFILL PER DETAIL D, SHEET M8.1.

LINE DATA

LINE #	DISTANCE	BEARING	START POINT	END POINT
L1	190.35'	S19°06'20"E	N 1366295.09, E 642622.30	N 1366115.23, E 642684.60
L2	257.42'	S21°06'20"E	N 1366115.23, E 642684.60	N 1365875.07, E 642777.30
L3	262.12'	S32°14'38"E	N 1365875.07, E 642777.30	N 1365653.38, E 642917.15
L4	148.33'	S9°44'37"E	N 1365653.38, E 642917.15	N 1365507.19, E 642942.25
L5	1.78'	S54°44'37"E	N 1365507.19, E 642942.25	N 1365506.16, E 642943.70
L6	2.63'	N80°21'09"E	N 1365506.16, E 642943.70	N 1365506.60, E 642946.29
L7	8.67'	S69°03'53"W	N 1366122.94, E 642695.54	N 1366119.84, E 642687.44
L8	4.64'	S23°54'58"W	N 1366119.84, E 642687.44	N 1366115.60, E 642685.56
L9	257.22'	S21°06'20"E	N 1366115.60, E 642685.56	N 1365875.63, E 642778.18
L10	262.55'	S32°17'02"E	N 1365875.63, E 642778.18	N 1365653.67, E 642918.41
L11	145.05'	S9°44'32"E	N 1365653.67, E 642918.41	N 1365510.71, E 642942.95
L12	4.51'	S54°44'04"E	N 1365510.71, E 642942.95	N 1365508.11, E 642946.64

NO	BY	DATE	REVISIONS	DATE	APP.

Professional Engineer (Civil)
CERTIFICATE NO.
Registered
Signed
ARIZONA, U.S.A.
Expires 12/31/28

PREPARED BY: PACE
DESIGNED BY: NE
DRAWN BY: DS, WW
CHECKED BY: TP
SCALE: AS NOTED
DATE: NOV 2025
JOB NO. B614

THESE DRAWINGS ARE THE PROPERTY OF P.A.C.E. AND SHALL NOT BE REPRODUCED IN ANY MANNER NOR BE USED FOR CONSTRUCTION UNLESS STAMPED 'ISSUED FOR CONSTRUCTION'.

TITLE
PLAN & PROFILE

100% ISSUED FOR BID

JOB
TOWN OF JEROME
WASTEWATER
TREATMENT PLANT
AZ
YAVAPAI CO.

PREPARED BY:
PACE
Advanced Water Engineering
6723 E. VIA de COMERCIO, SCOTTSDALE, CA 85258
P: (480) 991-3595 | www.pacewater.com
TAYLOR B. PIERCE R.C.E 70097 DATE

SHEET
M2.5
34 OF 99 SHEETS
JOB NO. B614

CALL TWO WORKING DAYS BEFORE YOU DIG
602-263-1100
1-800-STAKE-IT
(OUTSIDE MARICOPA COUNTY)

W:\B614\Engineering\B614-3\sheets\B614 - M2.1 YARD PIPING - OLD VERSION (RESTORED).dwg - Tab: M2.5 - by reddington on 03/10/26 at 2:03:53 PM

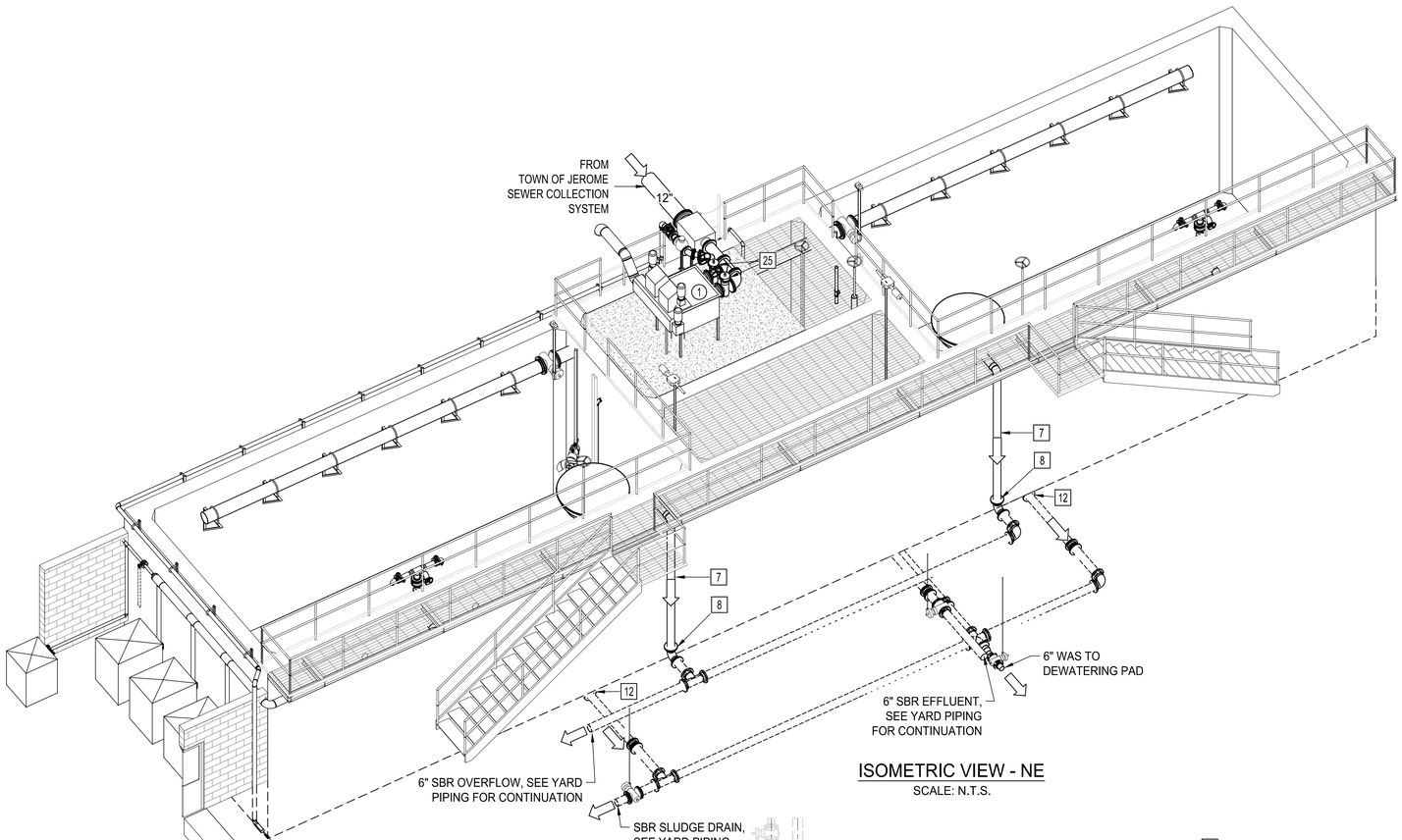

ISOMETRIC VIEW - NE

SCALE: N.T.S.

NOTE:
ROOF AND FOUNDATION SLABS
NOT SHOWN FOR CLARITY.

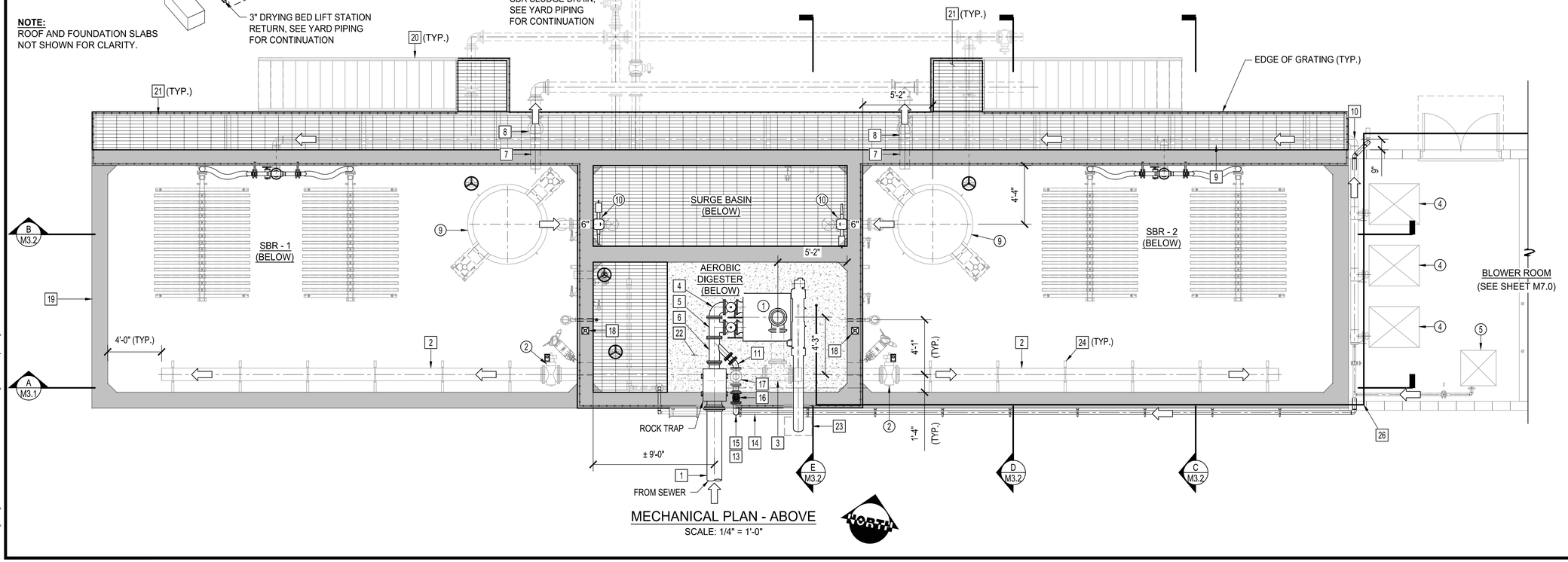

MECHANICAL PLAN - ABOVE

SCALE: 1/4" = 1'-0"

CONSTRUCTION NOTES:

1. INSTALL 12" D.I. PIPE (FLG'D).
2. INSTALL 10" D.I. PIPE (FLG'D).
3. INSTALL 10" D.I. TEE (FLG'D).
4. INSTALL 8" - 90° D.I. BEND (FLG'D).
5. INSTALL 8" D.I. TEE (FLG'D).
6. INSTALL 8"x4" D.I. REDUCING WYE (FLG'D).
7. INSTALL 6" SDR35 PVC PIPE.
8. INSTALL 6" - 90° SDR35 PVC BEND (MJ).
9. INSTALL 6" SCH. 10 CARBON STEEL PIPE.
10. INSTALL 6" - 90° SCH. 10 CARBON STEEL BEND.
11. INSTALL 4" - 45° D.I. BEND (FLG'D).
12. INSTALL 6" - 90° D.I. BEND (MJ).
13. INSTALL 4"x 3" D.I. REDUCER (FLG'D).
14. INSTALL 3" SCH. 80 PVC PIPE.
15. INSTALL 4" - 90° SCH. 80 PVC BEND.
16. INSTALL 4" PVC PLUG VALVE.
17. INSTALL 4" SCH. 80 PVC CHECK VALVE.
18. INSTALL DAVIT CRANE BASE (APPROX. LOCATION).
19. SBR STRUCTURE (SEE STRUCTURAL).
20. STAIRS & RAILING PER MANUFACTURER.
21. GRATING PER MANUFACTURER.
22. CONCRETE SLAB PER STRUCTURAL.
23. WASTE BIN (BY OTHERS).
24. INSTALL PIPE SUPPORTS PER DETAIL A SHT M8.5
25. INSTALL 8" PLUG VALVE, FLG'D.
26. INSTALL 2" SCH. 80 PVC POTABLE WATER

NO	BY	DATE	REVISIONS	DATE	APP.

Registered Professional Engineer (Civil)
CERTIFICATE NO. 70097
Timothy B. Pierce
Signed
ARIZONA, U.S.A.
Expires 12/31/28

THESE DRAWINGS ARE THE PROPERTY OF P.A.C.E. AND SHALL NOT BE REPRODUCED IN ANY MANNER NOR BE USED FOR CONSTRUCTION UNLESS STAMPED 'ISSUED FOR CONSTRUCTION'.

PREPARED BY:	PACE
DESIGNED BY:	NE
DRAWN BY:	DS, WW
CHECKED BY:	TP
SCALE:	AS NOTED
DATE	NOV 2025
JOB NO.	B614

TITLE
SBR MECHANICAL PLAN

JOB
TOWN OF JEROME
WASTEWATER
TREATMENT PLANT
YAVAPAI CO. AZ

100% ISSUED FOR BID

PREPARED BY:
PACE
Advanced Water Engineering
8723 E. VIA DE COMMERCIO, 3RD FLOOR, SCOTTSDALE, CA 85258
P: (480) 991-3595 | www.pacewater.com
TAYLOR B. PIERCE R.C.E. 70097 DATE

SHEET
M3.0
35 OF 99 SHEETS

JOB NO. B614

W:\B614\Engineering\B614-3\Sheets\B614 - M3.0 MECHANICAL PLAN.dwg - Tab: M3.0 - by neddington on 02/19/26 at 9:31:42 AM

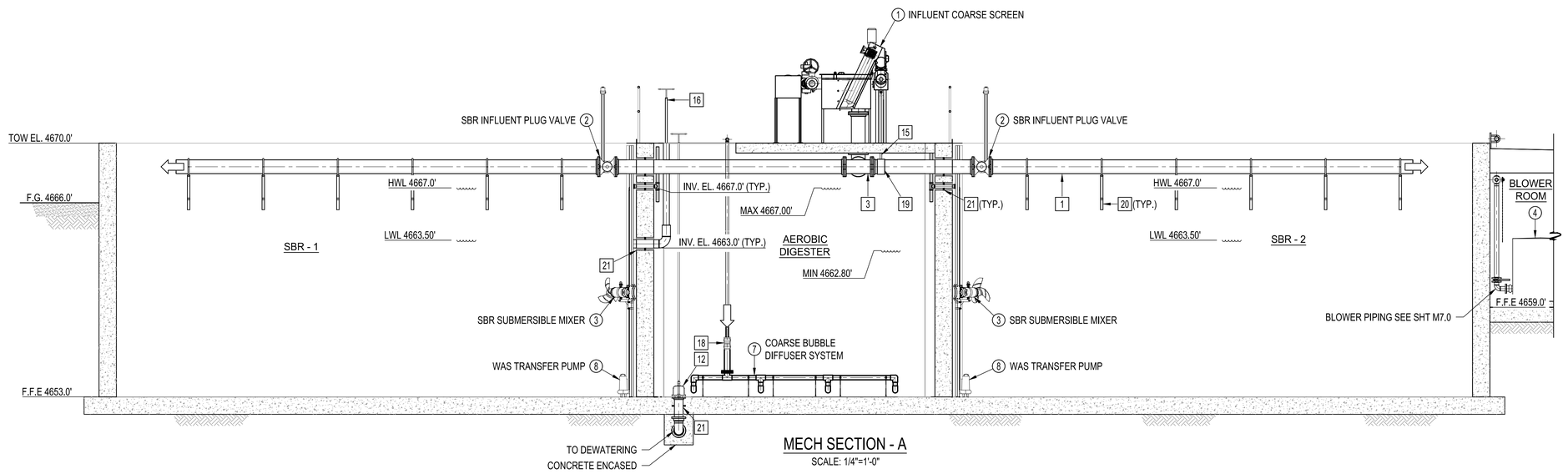

MECH SECTION - A

SCALE: 1/4"=1'-0"

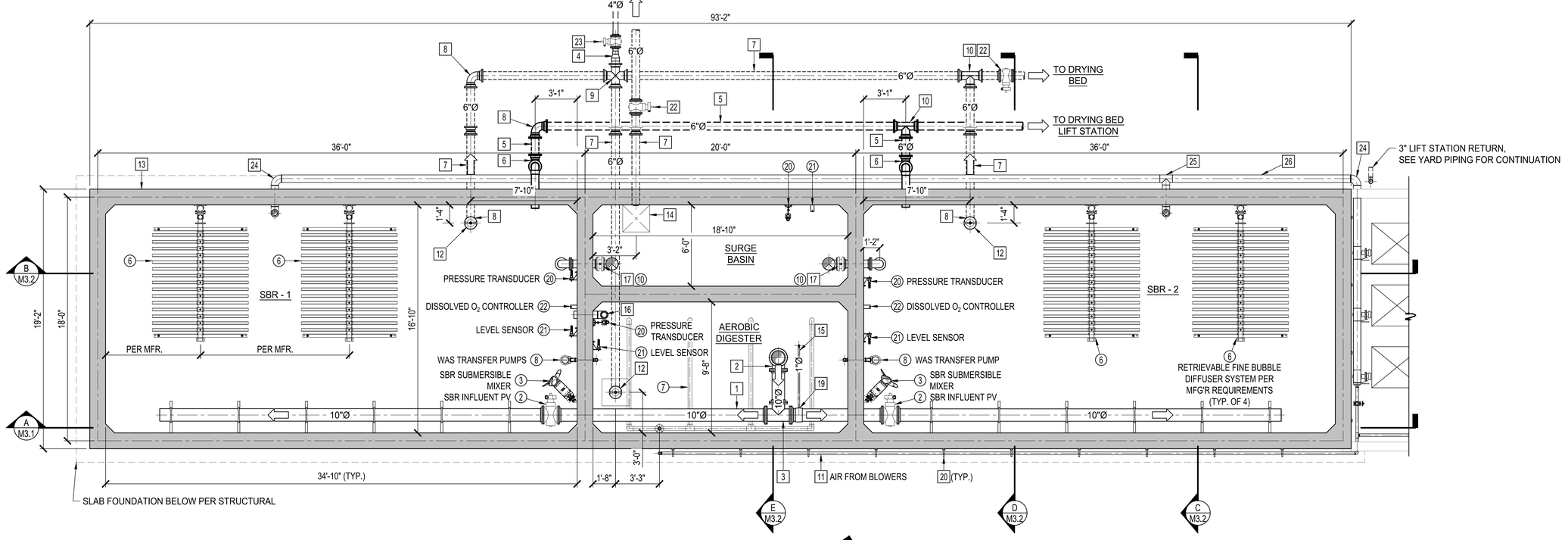

MECHANICAL PLAN - BELOW

SCALE: 1/4" = 1'-0"

CONSTRUCTION NOTES:

1. INSTALL 10" INFLUENT D.I. PIPE (FLG'D).
2. INSTALL 10" - 90° D.I. BEND (FLG'D).
3. INSTALL 10" D.I. TEE (FLG'D).
4. INSTALL 6" x 4" PVC REDUCER.
5. INSTALL 6" SDR35 PVC PIPE.
6. INSTALL 6" - 90° SDR35 PVC BEND (MJ).
7. INSTALL 6" C900 PVC PIPE.
8. INSTALL 6" - 90° D.I. BEND (MJ).
9. INSTALL 6" C900 PVC CROSS (MJ).
10. INSTALL 6" C900 PVC TEE (MJ).
11. INSTALL 3" SCH. 80 PVC PIPE.
12. INSTALL MUD VALVE w/ STEM RISER (SIZE PER PLAN).
13. SBR STRUCTURE (SEE S2.0).
14. INSTALL 2' x 2' SUMP PER STRUCTURAL PLANS.
15. INSTALL 1" DRAIN LINE FROM SCREEN.
16. INSTALL 6" TELESCOPING VALVE W/ HANDWHEEL.
17. INSTALL 6" BUTTERFLY VALVE W/ ACTUATOR (VENDOR PROVIDED).
18. INSTALL 2"x4" SS TO PVC CONCENTRIC REDUCER (SEE SECTION - A)
19. INSTALL TAP PER PLAN.
20. INSTALL PIPE SUPPORTS PER DETAIL A ON SHEET M8.5.
21. PIPE PENETRATION PER DETAIL G ON SHEET M8.4
22. INSTALL 6" PLUG VALVE.
23. INSTALL 4" PLUG VALVE.
24. INSTALL 6" SCH. 10 CARBON STEEL 90 DEG BEND.
25. INSTALL 6" SCH. 10 CARBON STEEL TEE.
26. INSTALL 6" SCH. 10 CARBON STEEL PIPE.

NO	BY	DATE	REVISIONS	DATE	APP.

Registered Professional Engineer (Civil) CERTIFICATE NO. 70097 Timothy Pierce Signed 10-31-25 ARIZONA, U.S.A. Expires 12/31/28

PREPARED BY: PACE
DESIGNED BY: NE
DRAWN BY: DS, WW
CHECKED BY: TP
SCALE: AS NOTED
DATE: NOV 2025
JOB NO.: B614

THESE DRAWINGS ARE THE PROPERTY OF P.A.C.E. AND SHALL NOT BE REPRODUCED IN ANY MANNER NOR BE USED FOR CONSTRUCTION UNLESS STAMPED 'ISSUED FOR CONSTRUCTION'.

TITLE: **SBR MECHANICAL PLAN**

JOB: TOWN OF JEROME
WASTEWATER
TREATMENT PLANT
YAVAPAI CO. AZ

100% ISSUED FOR BID

PREPARED BY: TAYLOR B. PIERCE R.C.E 70097 DATE

PACE
Advanced Water Engineering
8723 E. Via de Commercio, Suite 1 | Scottsdale, CA 85258
P: (480) 991-3995 | www.pacewater.com

SHEET **M3.1**
36 OF 99 SHEETS

JOB NO. B614

W:\B614\Engineering\B614-3\Sheets\B614 - M3.0 MECHANICAL PLAN.dwg - Tab: M3.1 - by reddington on 02/19/26 at 9:31:42 AM

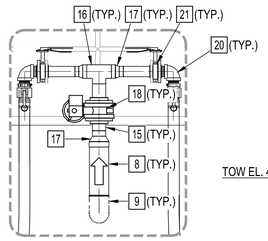

DETAIL - A
SCALE: 1/2"=1'-0"

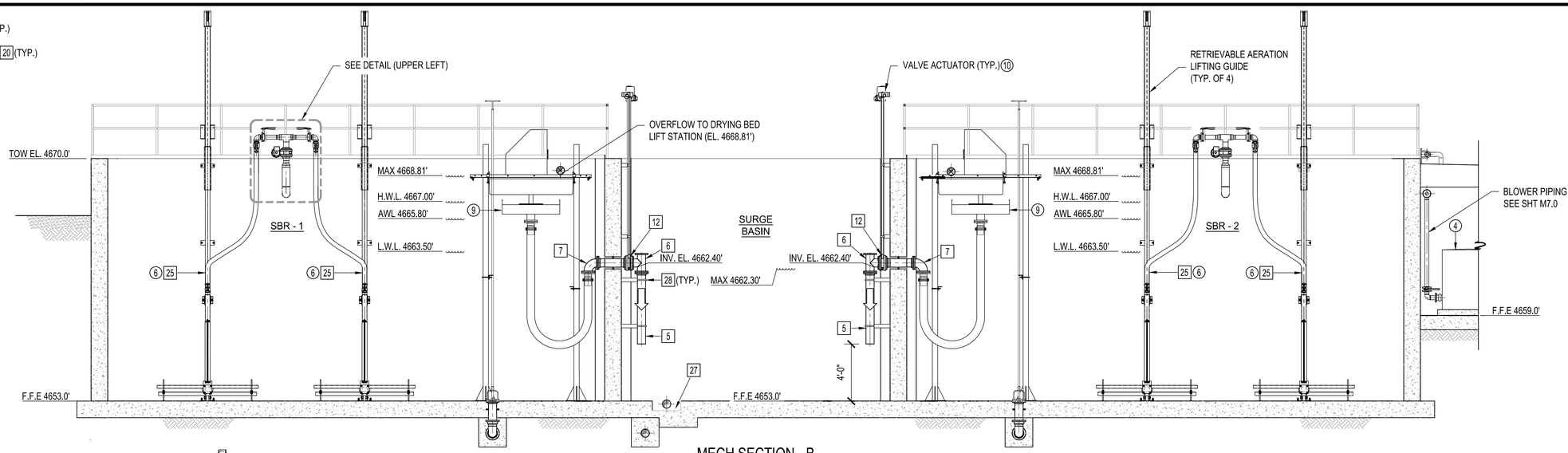

MECH SECTION - B
SCALE: 1/4"=1'-0"

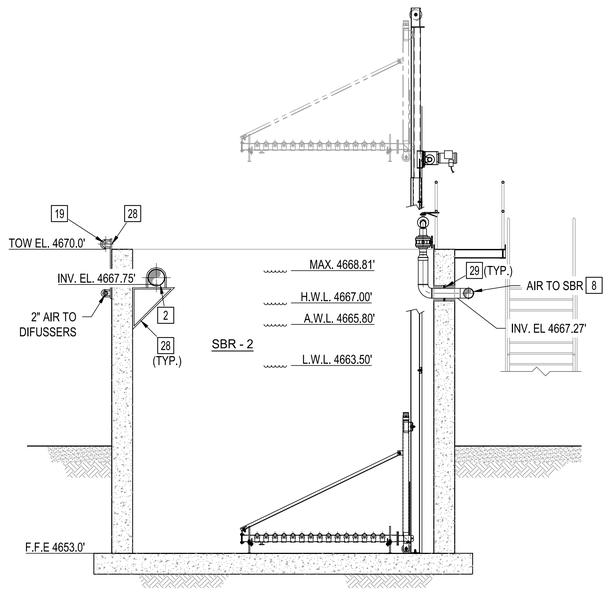

MECH SECTION - C
SCALE: 1/4"=1'-0"

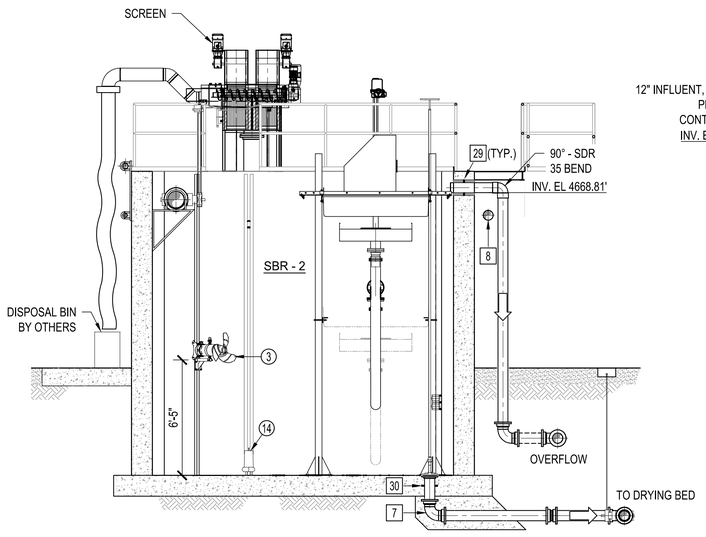

MECH SECTION - D
SCALE: 1/4"=1'-0"

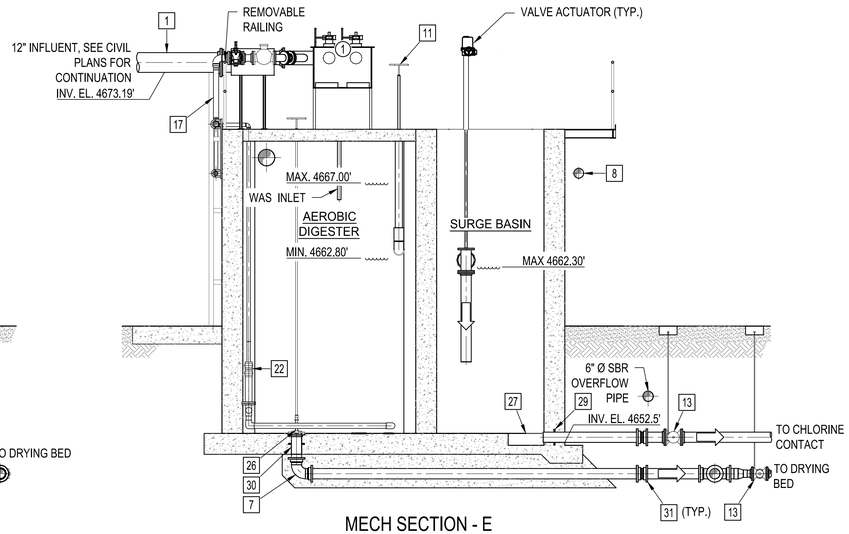

MECH SECTION - E
SCALE: 1/4"=1'-0"

CONSTRUCTION NOTES:

1. INSTALL12" D.I. PIPE (FLG'D).
2. INSTALL 10" INFLUENT D.I. PIPE (FLG'D).
3. INSTALL 10" - 90° D.I. BEND (FLG'D).
4. INSTALL 10" D.I. TEE (FLG'D).
5. INSTALL 6" D.I. PIPE (FLG'D).
6. INSTALL 6" D.I. TEE (FLG'D)
7. INSTALL 6" - 90° D.I. BEND (FLG'D).
8. INSTALL 6" SCH. 10 CARBON STEEL PIPE.
9. INSTALL 6" - 90° CARBON STEEL BEND.
10. INSTALL 6" - 90° CARBON STEEL BEND (FLG'D).
11. INSTALL 6" TELESCOPING VALVE W/ HANDWHEEL.
12. INSTALL 6" BUTTERFLY VALVE W/ ACTUATOR PER SPECIFICATIONS.
13. INSTALL BURRIED-SERVICE 6" PLUG VALVE WITH VALVE CAN AND NUT EXTENSION.
14. INSTALL 4" D.I. PIPE (FLG'D).
15. INSTALL 4" SCH. 10 CARBON STEEL PIPE.
16. INSTALL 4" SCH. 10 CARBON STEEL TEE.
17. INSTALL 4" x 3" SCH. 10 CARBON STEEL CONCENTRIC REDUCER.
18. INSTALL 4" ELECTRICALLY ACTUATED BUTTERFLY VALVE (VENDOR PROVIDED)
19. INSTALL 3" SCH. 80 PVC PIPE.
20. INSTALL 3" - 90° CARBON STEEL BEND (GROOVED).
21. INSTALL 3" BUTTERFLY VALVE PER SPECIFICATIONS.
22. INSTALL 2"x4" SS TO PVC CONCENTRIC REDUCER (SEE SECTION - A)
23. INSTALL 2" SCH. 10 CARBON STEEL PIPE.
24. INSTALL 2" SCH. 10 WELDED CARBON STEEL 90° BEND.
25. INSTALL RETRIEVABLE DIFFUSER ASSEMBLY w/ FLEXIBLE HOSE.
26. INSTALL MUD VALVE w/ EXTENSION PER PLAN.
27. INSTALL 2'x2' SUMP PER STRUCTURAL PLANS.
28. INSTALL PIPE SUPPORTS PER DETAIL A ON SHEET M8.5.
29. INSTALL PIPE PENETRATION PER DETAIL G SHEET M8.4.
30. INSTALL PIPE PENETRATION PER DETAIL F SHEET M8.3.
31. INSTALL DEFLECTION COUPLING.

NO	BY	DATE	REVISIONS	DATE	APP.

Registered Professional Engineer (Civil) CERTIFICATE NO. 70097 Signed TAYLOR B. PIERCE ARIZONA, U.S.A. Expires 12/31/28

THESE DRAWINGS ARE THE PROPERTY OF P.A.C.E. AND SHALL NOT BE REPRODUCED IN ANY MANNER NOR BE USED FOR CONSTRUCTION UNLESS STAMPED 'ISSUED FOR CONSTRUCTION'.

PREPARED BY:	PACE
DESIGNED BY:	NE
DRAWN BY:	DS, WW
CHECKED BY:	TP
SCALE:	AS NOTED
DATE	NOV 2025
JOB NO.	B614

TITLE: **SBR MECHANICAL SECTIONS**

JOB: TOWN OF JEROME WASTEWATER TREATMENT PLANT — YAVAPAI CO. AZ

100% ISSUED FOR BID

PREPARED BY: TAYLOR B. PIERCE R.C.E 70097 DATE

PACE
Advanced Water Engineering
8723 E. Via de Ventura Suite 150 | SCOTTSDALE, CA 85258
P: (480) 991-3995 | www.paceaz.com

SHEET **M3.2**
37 OF 99 SHEETS

JOB NO. B614

W:\B614\Engineering\B614-30sheets\B614 - M3.2 MECHANICAL SECTIONS.dwg - Tab: M3.2 - by raddington on 11/17/25 at 2:34:34 PM

CONSTRUCTION NOTES:

1. INSTALL CONCRETE CHLORINE CONTACT CHANNEL PER STRUCTURAL SHT S1.5.
2. INSTALL TABLET EROSION CHLORINATION EQUIPMENT.
3. INSTALL TABLET EROSION DE-CHLORINATION EQUIPMENT.
4. INSTALL SOLID METAL GRATING WALKWAY PER SPECIFICATION 05 53 00.
5. INSTALL UPWARD WEIR GATE PER SPECIFICATION 40 0513.53.
6. INSTALL 6" FLOW METER.
7. INSTALL 6" ACTUATED BUTTERFLY VALVE.
8. INSTALL 3' x 3' CAST IN PLACE BOX & TRAFFIC RATED COVER.
9. INSTALL 6" D.I. PIPE.
10. INSTALL 6" - 90° D.I. BEND.
11. INSTALL 6" - 90° SCH. 40 PVC BEND.
12. INSTALL PIPE SUPPORTS PER DETAIL A SHEET M8.5.
13. INSTALL PVC FLANGE ADAPTER.
14. INSTALL 6" SCH. 40 PVC PIPE.
15. INSTALL 4" ELECTRICALLY ACTUATED PLUG VALVE.
16. INSTALL DEWATERING FEED PUMP.
17. INSTALL DRY POLYMER MAKE-DOWN AND FEED UNIT.
18. INSTALL POLYMER METERING PUMP.
19. INSTALL BAGGER SYSTEM CONTROL PANEL.
20. INSTALL 2" X 1" PVC REDUCING BUSHING.
21. INSTALL 2" SCH. 80 PVC TEE.
22. INSTALL 2" - 90° SCH. 80 PVC BEND.
23. INSTALL PVC CAP.
24. INSTALL 4" X 2" DI REDUCER.
25. INSTALL SHADE STRUCTURE (PER STRUCTURAL SHT S2.10).
26. INSTALL 30" ALUMINUM STEP-UP STAIRCASE.
27. INSTALL METAL GRATING WALKWAY PER SPECIFICATION 05 53 00.
28. INSTALL PIPE PENETRATION PER DETAIL G, SHEET M8.4.

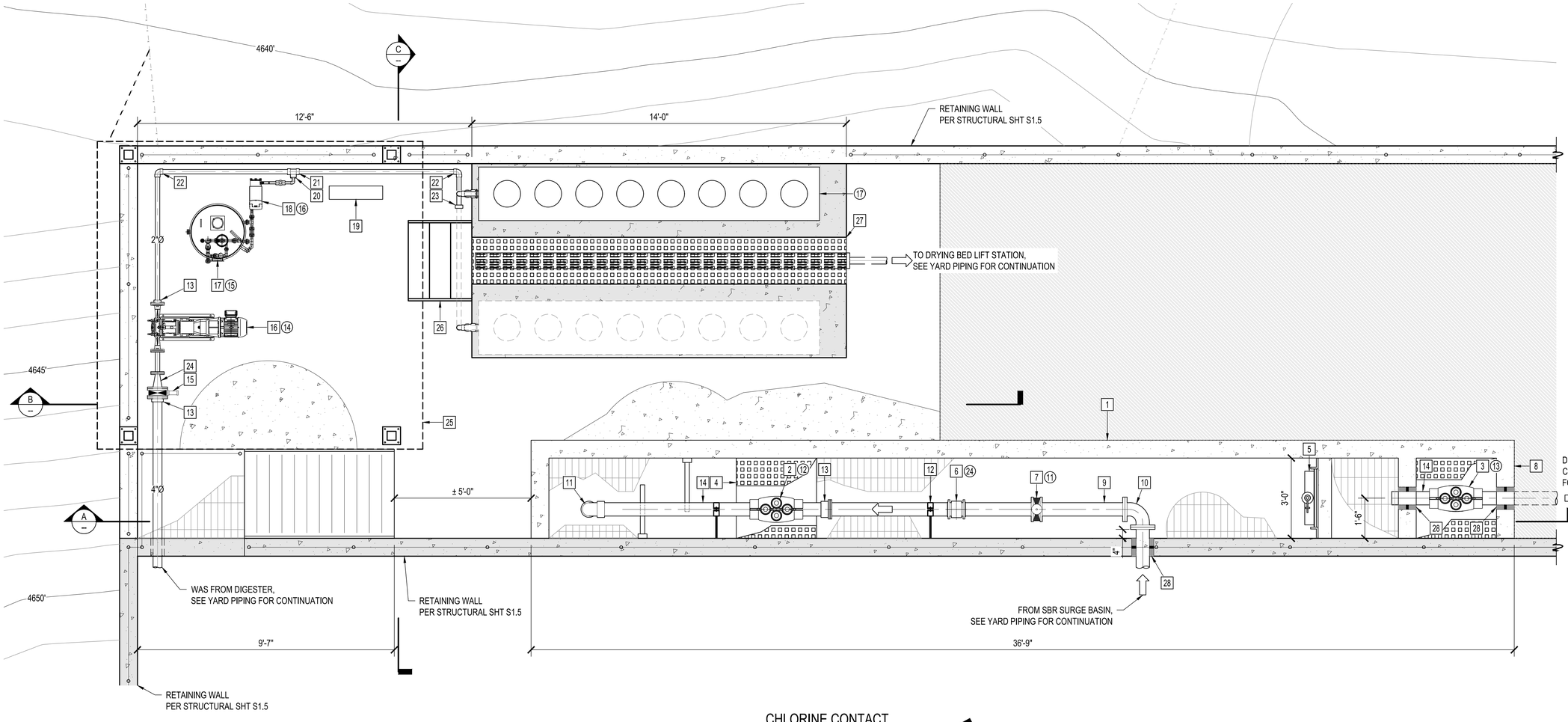

CHLORINE CONTACT
CHANNEL PLAN
SCALE: 1/2"=1'-0"

NORTH

NO	BY	DATE	REVISIONS	DATE	APP.

Registered Professional Engineer (Civil)
CERTIFICATE NO. 70097
Timothy B. Pierce
Signed
ARIZONA, U.S.A.
Expires 12/31/28

THESE DRAWINGS ARE THE PROPERTY OF P.A.C.E. AND SHALL NOT BE REPRODUCED IN ANY MANNER NOR BE USED FOR CONSTRUCTION UNLESS STAMPED 'ISSUED FOR CONSTRUCTION'.

PREPARED BY: PACE
DESIGNED BY: NE
DRAWN BY: DS, WW
CHECKED BY: TP
SCALE: AS NOTED
DATE: NOV 2025
JOB NO.: B614

TITLE: **DEWATERING & CCC MECH PLAN**

JOB: TOWN OF JEROME WASTEWATER TREATMENT PLANT — YAVAPAI CO. AZ

100% ISSUED FOR BID

PREPARED BY:
PACE
Advanced Water Engineering
8723 E. VIA de VENTURA, SUITE 290 | SCOTTSDALE, CA 85258
P: (480) 991-3995 | www.pacewater.com
TAYLOR B. PIERCE R.C.E 70097 DATE

SHEET **M4.0**
38 OF 99 SHEETS

JOB NO. B614

W:\B614\Engineering\B614-30sheets\B614 - M4.0 CCC MECH PLAN AND SECTIONS.dwg - Tab: PLAN VIEW - by reddington on 03/02/26 at 8:58:43 AM

CONSTRUCTION NOTES:

1. INSTALL CONCRETE CHLORINE CONTACT CHANNEL PER STRUCTURAL SHT S1.5.
2. INSTALL TABLET EROSION CHLORINATION EQUIPMENT.
3. INSTALL TABLET EROSION DE-CHLORINATION EQUIPMENT.
4. INSTALL SOLID METAL GRATING WALKWAY PER SPECIFICATION 05 53 00.
5. INSTALL UPWARD WEIR GATE PER SPECIFICATION 40 0513.53.
6. INSTALL 6" FLOW METER.
7. INSTALL 6" ACTUATED BUTTERFLY VALVE.
8. GROUT FILL & SLOPE TO INVERT.
9. INSTALL 6" D.I. PIPE.
10. INSTALL 6" - 90° D.I. BEND.
11. INSTALL PIPE SUPPORTS PER DETAIL A SHEET M8.5.
12. INSTALL 6" - 90° SCH. 40 PVC BEND.
13. INSTALL PVC FLANGE ADAPTER
14. INSTALL 6" SCH. 40 PVC PIPE.
15. INSTALL PIPE PENETRATION PER DETAIL G SHEET M8.4.

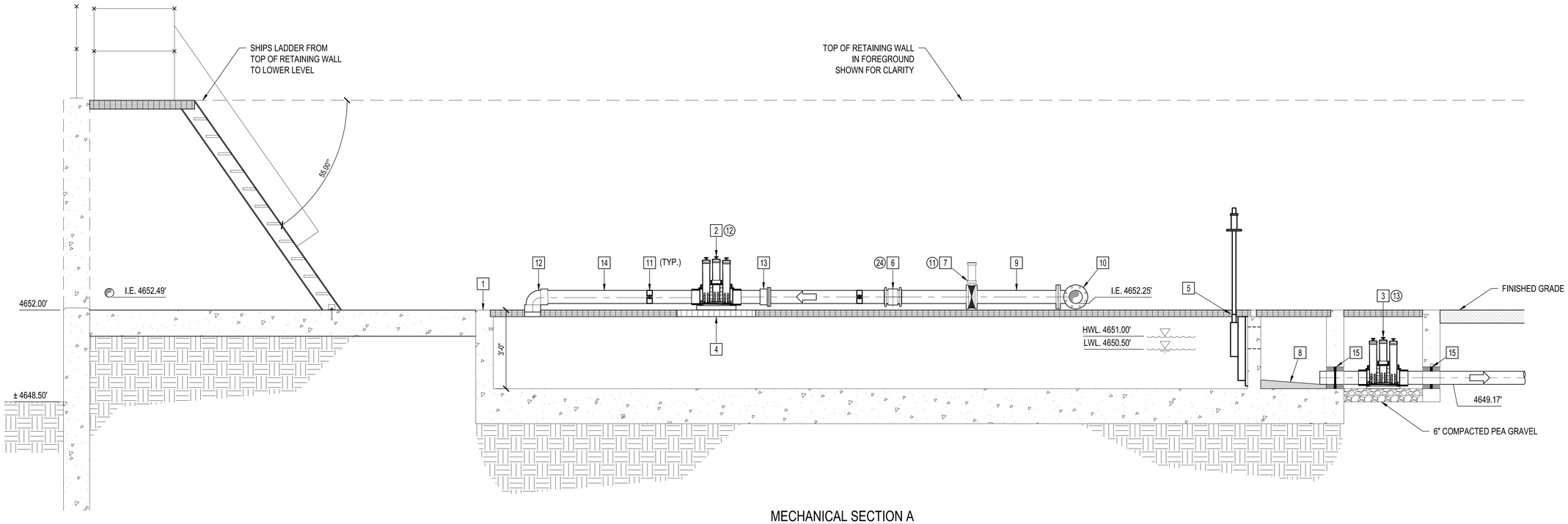

MECHANICAL SECTION A

SCALE: 1/2"=1'-0"

NO	BY	DATE	REVISIONS	DATE	APP.

THESE DRAWINGS ARE THE PROPERTY OF P.A.C.E. AND SHALL NOT BE REPRODUCED IN ANY MANNER NOR BE USED FOR CONSTRUCTION UNLESS STAMPED 'ISSUED FOR CONSTRUCTION'.

Registered Professional Engineer (Civil) CERTIFICATE NO. 70097 TAYLOR B. PIERCE Signed ARIZONA, U.S.A. Expires 12/31/28

PREPARED BY: PACE
DESIGNED BY: NE
DRAWN BY: DS, WW
CHECKED BY: TP
SCALE: AS NOTED
DATE: NOV 2025
JOB NO.: B614

TITLE: CHLORINE CONTACT BASIN SECTION

JOB: TOWN OF JEROME WASTEWATER TREATMENT PLANT — YAVAPAI CO., AZ

100% ISSUED FOR BID

PREPARED BY: TAYLOR B. PIERCE R.C.E 70097 DATE

PACE
Advanced Water Engineering
8723 E. Via de Commercio, Suite 104 | Scottsdale, AZ 85258
P: (480) 991-3595 | www.pacewater.com

SHEET M4.1
39 OF 99 SHEETS

JOB NO. B614

W:\B614\Engineering\B614-30\sheets\B614 - MM.0 CCC MECH PLAN AND SECTIONS.dwg - Tab: SECTION 1 - by reddington on 03/02/26 at 9:58:43 AM

CONSTRUCTION NOTES:

1. INSTALL CONCRETE CHLORINE CONTACT CHANNEL PER STRUCTURAL SHT S1.5.
2. INSTALL SOLID METAL GRATING WALKWAY PER SPECIFICATION 05 53 00.
3. INSTALL 6" D.I. PIPE.
4. INSTALL SLUDGE BAGGER SYSTEM.
5. INSTALL SHADE STRUCTURE (PER STRUCTURAL SHT S2.10).
6. INSTALL 14 LF TRENCH DRAIN, NEI MODEL R4996-A8. OR ENGINEER APPROVED EQUAL.
7. INSTALL METAL GRATING WALKWAY PER SPECIFICATION 05 53 00.
8. INSTALL 1" PVC CHECK VALVE.
9. INSTALL 1" BALL VALVE.
10. INSTALL 1" - 90° SCH. 80 PVC BEND.
11. INSTALL 2" SCH. 80 PVC PIPE.
12. INSTALL BAGGER SYSTEM CONTROL PANEL.
13. INSTALL POLYMER METERING PUMP.
14. INSTALL DRY POLYMER MAKE-DOWN AND FEED UNIT.
15. INSTALL DEWATERING FEED PUMP.
16. INSTALL 3" - 90° SCH. 80 PVC BEND.
17. INSTALL 3" SCH. 80 PVC PIPE.
18. INSTALL 3" SCH.80 PVC TEE.
19. INSTALL PVC CAP.
20. RETAINING WALL, PER STRUCTURAL PLANS
21. INSTALL 30" ALUMINUM STEP-UP STAIRCASE.
22. INSTALL 2" - 90° SCH. 80 PVC BEND.
23. PIPE PENETRATION PER G SHEET M8.4.

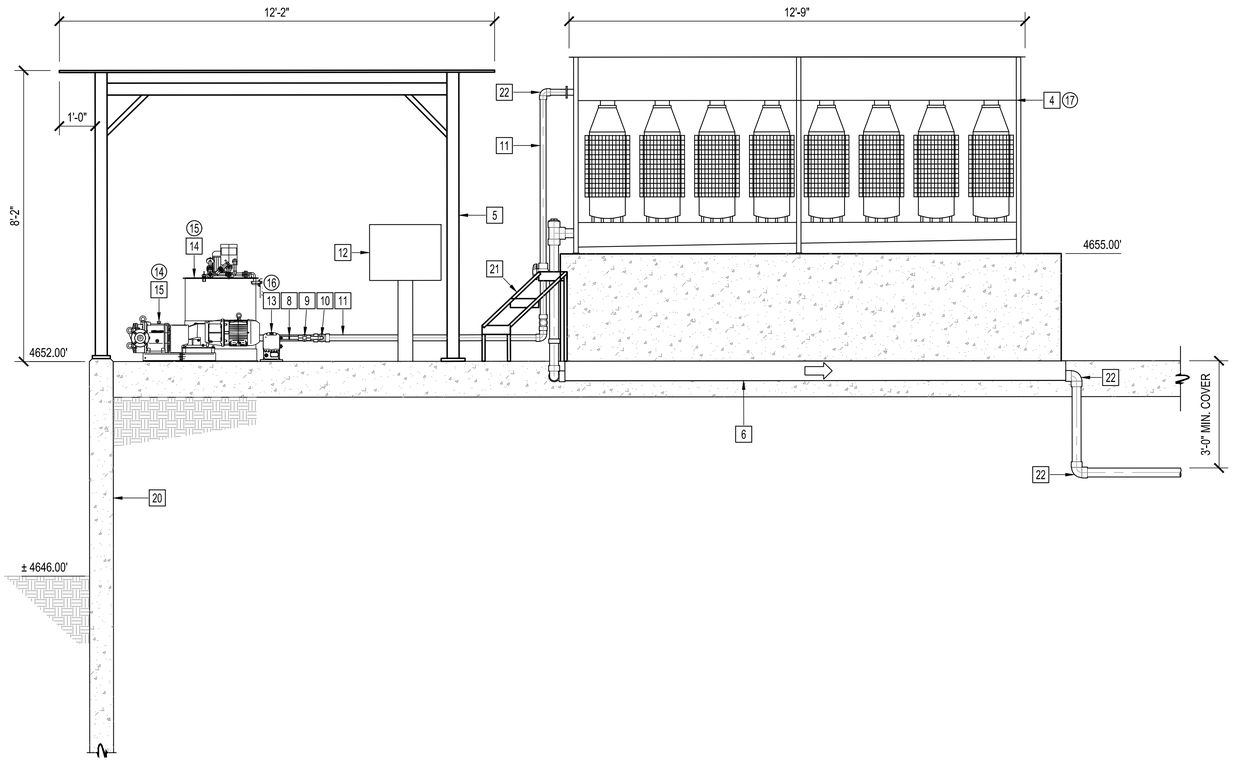

MECHANICAL SECTION B
SCALE: 1/2"=1'-0"

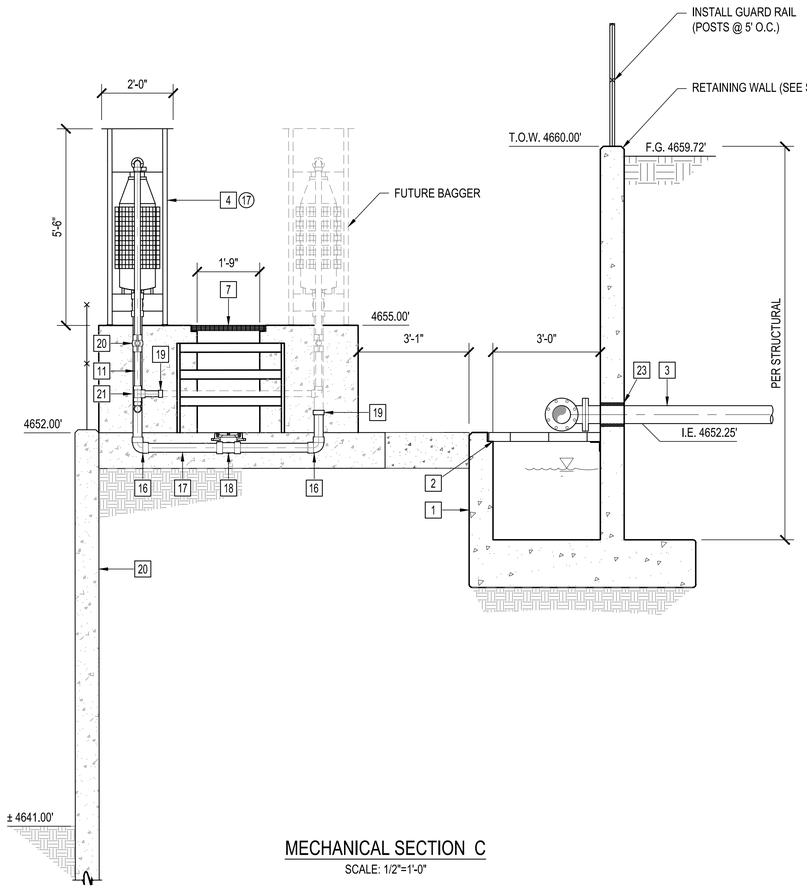

MECHANICAL SECTION C
SCALE: 1/2"=1'-0"

NO	BY	DATE	REVISIONS	DATE	APP.

Registered Professional Engineer (Civil) CERTIFICATE NO. 70097 Timothy B. Pierce Signed ARIZONA U.S.A. Expires 12/31/28

PREPARED BY: PACE
DESIGNED BY: NE
DRAWN BY: DS, WW
CHECKED BY: TP
SCALE: AS NOTED
DATE: NOV 2025
JOB NO. B614

THESE DRAWINGS ARE THE PROPERTY OF P.A.C.E. AND SHALL NOT BE REPRODUCED IN ANY MANNER NOR BE USED FOR CONSTRUCTION UNLESS STAMPED 'ISSUED FOR CONSTRUCTION'.

TITLE
DEWATERING SECTION

JOB
TOWN OF JEROME
WASTEWATER
TREATMENT PLANT
YAVAPAI CO. AZ

100% ISSUED FOR BID

PREPARED BY:
PACE
Advanced Water Engineering
8723 E. VIA de VENTURA, SUITE 240 | SCOTTSDALE, CA 85258
P: (480) 991-3995 | www.pacewater.com
TAYLOR B. PIERCE R.C.E 70097 DATE

SHEET
M4.2
40 OF 99 SHEETS

JOB NO. B614

W:\B614\Engineering\B614-30sheets\B614 - M4.0 CCC MECH PLAN AND SECTIONS.dwg - Tab: SECTION 2 - by reddington on 03/02/26 at 9:58:43 AM

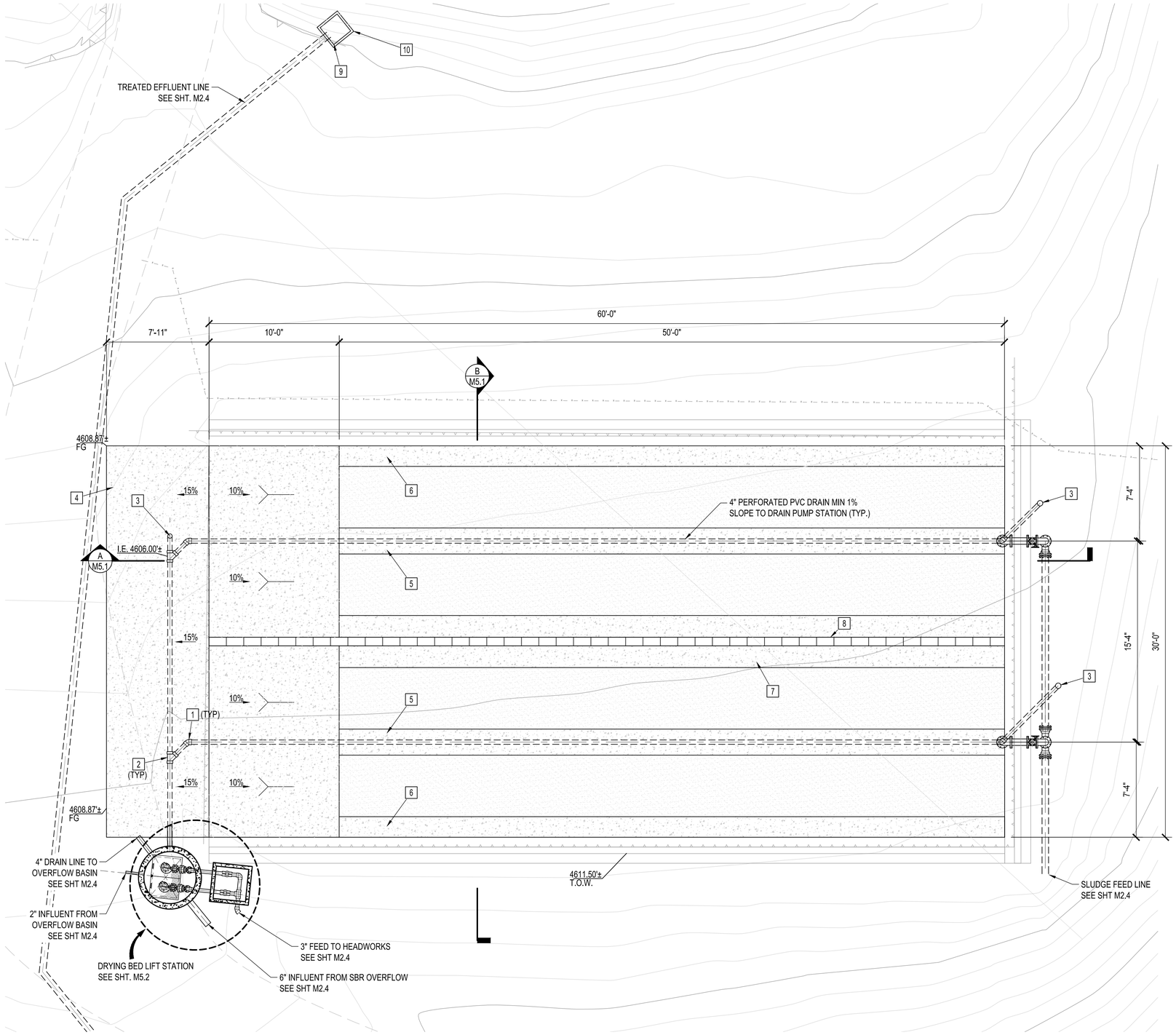

SLUDGE DRYING BED
PLAN VIEW
SCALE: 1/4" = 1'-0"

CONSTRUCTION NOTES:

1. INSTALL 4" - 45° SDR35 PVC BEND.
2. INSTALL 4"x4" SDR35 PVC WYE.
3. INSTALL 4" CLEANOUT PER DETAIL I SHEET M8.3.
4. INSTALL 8" THICK CONCRETE RAMP W #5 AT 12" O.C. EACH WAY, BOTTOM OVER 6" ABC.
5. INSTALL 2'-0" WIDE x8" THICK CONCRETE SLAB W/ 3 #5 CONT. AND #5 AT 16" O.C. TRANS., BOTTOM. TYPICAL OF 2.
6. INSTALL 1'-7" WIDE x8" THICK CONCRETE SLAB W/ 2 #5 CONT. AND #5 AT 16" O.C. TRANS., BOTTOM. TYPICAL OF 2.
7. INSTALL 3'-10" WIDE x12" THICK CONCRETE SLAB W/ 6 #5 CONT. AND #5 AT 16" O.C. TRANS., BOTTOM.
8. INSTALL CMU BLOCK WALL, #5 VERTICAL W/ DOWEL INTO CONCRETE PAD AT 48" O.C. ALTERNATING, GROUT WALL SOLID.
9. INSTALL AUTOSAMPLER, PROVIDED BY TOWN.
10. INSTALL 2'x2'x2' CATCH BASIN TYPE G W/ SINGLE GRATE AND 6" INLET/OUTLET.

NOTES:

1. SLOPE GRADE MIN. 5:1 AWAY AS NEEDED AROUND ENTIRE PERIMETER.
2. PROTECT IN PLACE EXISTING ROADWAY BARRIERS.

NO	BY	DATE	REVISIONS	DATE	APP.

Registered Professional Engineer (Civil)
CERTIFICATE NO. 70097
TAYLOR B. PIERCE
Signed
ARIZONA, U.S.A.
Expires 12/31/28

PREPARED BY: PACE
DESIGNED BY: NE
DRAWN BY: DS, WW
CHECKED BY: TP
SCALE: AS NOTED
DATE: NOV 2025
JOB NO.: B614

THESE DRAWINGS ARE THE PROPERTY OF P.A.C.E. AND SHALL NOT BE REPRODUCED IN ANY MANNER NOR BE USED FOR CONSTRUCTION UNLESS STAMPED 'ISSUED FOR CONSTRUCTION'.

TITLE
SLUDGE DRYING BEDS PLAN

100% ISSUED FOR BID

JOB
TOWN OF JEROME
WASTEWATER
TREATMENT PLANT
YAVAPAI CO. AZ

PREPARED BY:
TAYLOR B. PIERCE R.C.E 70097 DATE
PACE
Advanced Water Engineering
8723 E. Via de Commercio, Suite 1, Scottsdale, AZ 85258
P: (480) 991-3995 | www.pacewater.com

SHEET
M5.0
41 OF 99 SHEETS

JOB NO. B614

W:\B614\Engineering\B614-30\sheets\B614 - M5.0 SLUDGE DRYING BEDS PLAN.dwg - Tab: M5.0 - by neddington on 11/19/25 at 3:14:09 PM

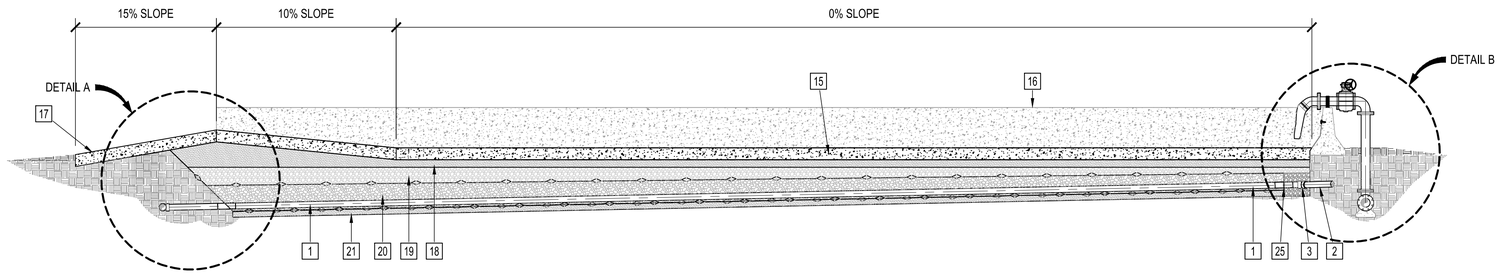

SLUDGE DRYING BED
SECTION - A
SCALE: 1/4" = 1'-0"

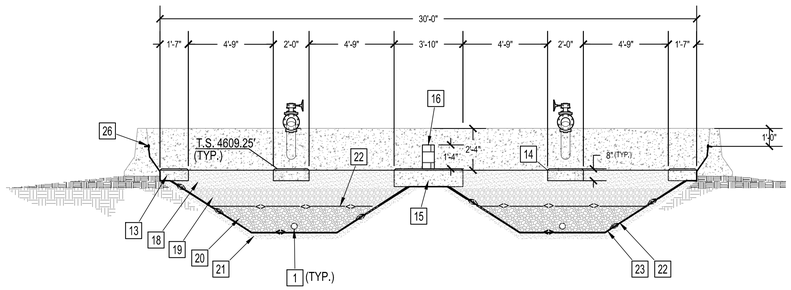

SLUDGE DRYING BED
SECTION - B
SCALE: 1/4" = 1'-0"

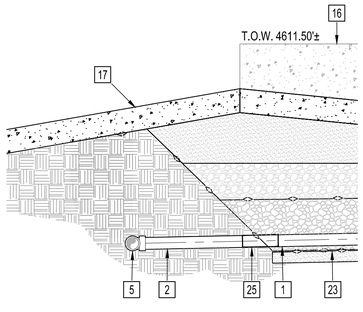

SLUDGE DRYING BED
DETAIL - A
SCALE: 1/2" = 1'-0"

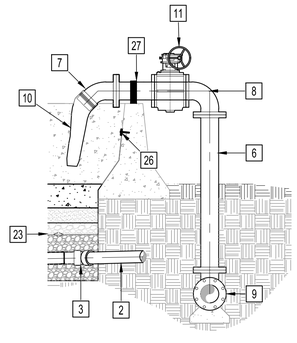

SLUDGE DRYING BED
DETAIL - B
SCALE: 1/2" = 1'-0"

CONSTRUCTION NOTES:

1. INSTALL 4" SDR 35 PVC PERFORATED PIPE.
2. INSTALL 4" SDR 35 PVC PIPE.
3. INSTALL 4" - 45° SDR35 PVC BEND.
4. INSTALL 4" - 90° LONG RADIUS SDR 35 PVC BEND.
5. INSTALL 4" SDR 35 PVC WYE.
6. INSTALL 6" D.I. PIPE.
7. INSTALL 6" - 45° D.I. BEND (FLG'D).
8. INSTALL 6" - 90° D.I. BEND (FLG'D).
9. INSTALL 6"x6"x6" D.I. TEE MJ x FLG'D CONNECTIONS W/ THRUST BLOCK PER DETAIL C SHEET M8.4.
10. INSTALL 6" RUBBER SKIRT W/ SS CLAMPS.
11. INSTALL 6" PLUG VALVE W/ HANDWHEEL.
12. INSTALL 4" CLEANOUT PER DETAIL I SHEET M8.3.
13. INSTALL 1'-7" WIDE x8" THICK CONCRETE SLAB W/ 2 #5 CONT. AND #5 AT 16" O.C. TRANS., BOTTOM. TYPICAL OF 2.
14. INSTALL 2'-0" WIDE x8" THICK CONCRETE SLAB W/ 3 #5 CONT. AND #5 AT 16" O.C. TRANS., BOTTOM. TYPICAL OF 2.
15. INSTALL 3'-10" WIDE x12" THICK CONCRETE SLAB W/ 6 #5 CONT. AND #5 AT 16" O.C. TRANS., BOTTOM.
16. INSTALL CMU BLOCK WALL, #5 VERTICAL W/ DOWEL INTO CONCRETE PAD AT 48" O.C. ALTERNATING, GROUT WALL SOLID.
17. INSTALL 8" THICK CONCRETE RAMP W #5 AT 12" O.C. EACH WAY, BOTTOM OVER 6" ABC.
18. INSTALL 12" SAND LAYER.
19. INSTALL 4-8 mm FINE GRAVEL.
20. INSTALL 1'-6" DEEP ¾" CRUSHED ROCK.
21. INSTALL 4" GRANULAR SAND LAYER.
22. INSTALL 100 mm GEOTEXTILE FABRIC PER SPECS.
23. INSTALL FLEXIBLE POLYPROPYLENE LINER PER SPECS.
24. INSTALL ANCHOR TRENCH PER DETAIL D SHEET M8.3.
25. INSTALL PIPE BOOT PER LINER MANUFACTURER RECOMMENDATIONS AND DETAIL E SHEET M8.3.
26. INSTALL HDPE LINER ANCHOR BOLT, ANCHOR TO EXISTING WALLS PER DETAIL C SHEET M8.3.
27. PIPE SUPPORT / STRAP

NOTES:

1. SLOPE GRADE MIN. 5:1 AWAY AS NEEDED AROUND ENTIRE PERIMETER.
2. PROTECT IN PLACE EXISTING ROADWAY BARRIERS.

NO	BY	DATE	REVISIONS	DATE	APP.

THESE DRAWINGS ARE THE PROPERTY OF P.A.C.E. AND SHALL NOT BE REPRODUCED IN ANY MANNER NOR BE USED FOR CONSTRUCTION UNLESS STAMPED 'ISSUED FOR CONSTRUCTION'.

Registered Professional Engineer (Civil) CERTIFICATE NO. 70097 Signed Taylor B. Pierce ARIZONA, U.S.A. Expires 12/31/28

PREPARED BY: PACE
DESIGNED BY: NE
DRAWN BY: DS, WW
CHECKED BY: TP
SCALE: AS NOTED
DATE: NOV 2025
JOB NO.: B614

TITLE: SLUDGE DRYING BEDS SECTIONS

100% ISSUED FOR BID

JOB: TOWN OF JEROME WASTEWATER TREATMENT PLANT — YAVAPAI CO. AZ

PREPARED BY: TAYLOR B. PIERCE — R.C.E. 70097 — DATE
PACE Advanced Water Engineering
8723 E. VIA DE COMMERCIO, 3RD FLOOR, SCOTTSDALE, CA 85258
P: (480) 991-3595 | www.pacewater.com

SHEET M5.1
42 OF 99 SHEETS

JOB NO. B614

W:\B614\Engineering\B614-3\Sheets\B614 - M5.0 SLUDGE DRYING BEDS PLAN.dwg - Tab: M5.1 - by maddington on 11/18/25 at 3:14:09 PM

CONSTRUCTION NOTES:

1. INSTALL 3" SCH. 80 PVC PIPE.
2. INSTALL 3" - 45° SCH. 80 PVC BEND.
3. INSTALL 3" - 90° DIP BEND.
4. INSTALL 3" SCH. 80 PVC TEE.
5. INSTALL 3" DIP PLUG VALVE.
6. INSTALL 3" DIP SWING CHECK VALVE.
7. INSTALL S.S PIPE SUPPORT PER DETAIL A SHEET M8.5.
8. INSTALL SUBMERSIBLE PUMP.
9. INSTALL 24"x36" ACCESS HATCH.
10. INSTALL LEVEL FLOAT ASSEMBLY AND SUPPORT STEM PER MANUFACTURER RECOMMENDATIONS.
11. INSTALL PUMP GUIDE RAIL SYSTEM PER MANUFACTURER RECOMMENDATIONS.
12. INSTALL PIPE PENETRATION PER DETAIL G SHEET M8.4.
13. INSTALL PRECAST 3' x 3' x 2' CONCRETE VAULT W/ ACCESS HATCH.
14. INSTALL 3" S.S. PIPE WELL AIR VENT PIPE W/ #20 MESH BUG SCREEN.
15. INSTALL 3+ PVC FLANGE ADAPTER.
16. INSTALL 3" - 90° DIP BEND.
17. INSTALL 3" DIP.
18. INSTALL PVC FLANGE ADAPTER.
19. COAT LIFT STATION AND PIPING FOR SEVERE H_2S CORROSION PER COATING SPECIFICATIONS
20. SUBGRADE PER GEOTECH REPORT

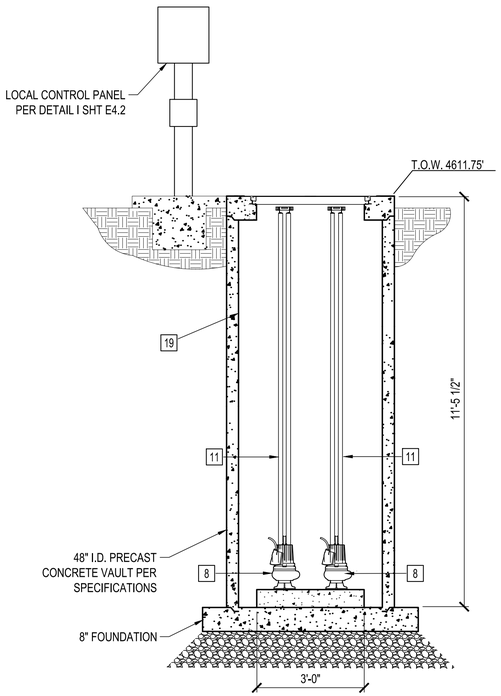

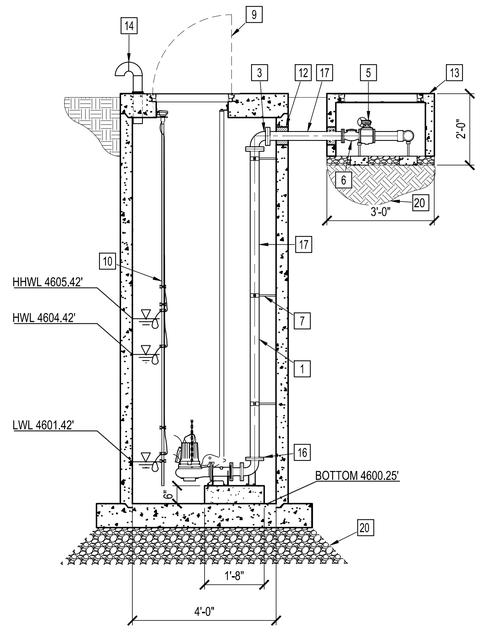

DRYING BED LIFT STATION
SECTIONS
SCALE: 1/2" = 1'-0"

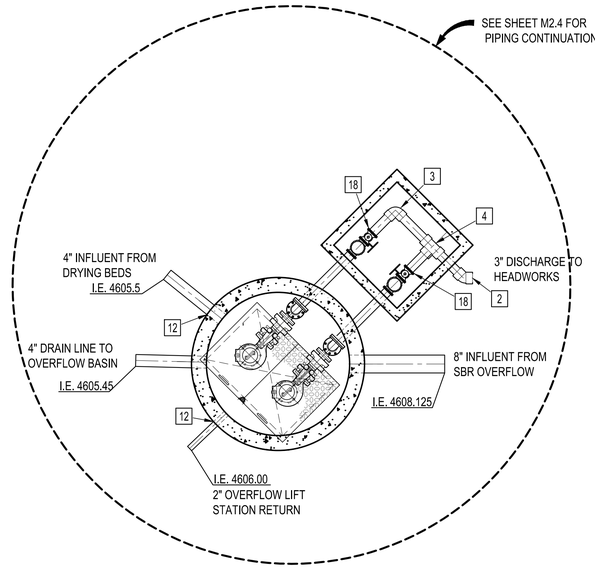

DRYING BED LIFT STATION
PLAN VIEW
SCALE: 1/2" = 1'-0"

NO	BY	DATE	REVISIONS	DATE	APP.

Registered Professional Engineer (Civil)
CERTIFICATE NO. 70097
TAYLOR B. PIERCE
Signed
ARIZONA, U.S.A.
Expires 12/31/28

THESE DRAWINGS ARE THE PROPERTY OF P.A.C.E. AND SHALL NOT BE REPRODUCED IN ANY MANNER NOR BE USED FOR CONSTRUCTION UNLESS STAMPED 'ISSUED FOR CONSTRUCTION'.

PREPARED BY: PACE
DESIGNED BY: NE
DRAWN BY: DS, WW
CHECKED BY: TP
SCALE: AS NOTED
DATE: NOV 2025
JOB NO.: B614

TITLE: DRYING BED LIFT STATION SECTIONS

JOB: TOWN OF JEROME
WASTEWATER
TREATMENT PLANT
YAVAPAI CO. AZ

100% ISSUED FOR BID

PREPARED BY:
PACE
Advanced Water Engineering
8723 E. VIA de COMMERCIO, SUITE 104, SCOTTSDALE, CA 85258
P: (408) 991-3595 | www.pacewater.com
TAYLOR B. PIERCE R.C.E 70097 DATE

SHEET
M5.2
43 OF 99 SHEETS

JOB NO. B614

W:\B614\Engineering\B614-3\Sheets\B614 - M5.0 SLUDGE DRYING BEDS PLAN.dwg - Tab: M5.2 - by noddington on 11/19/25 at 3:14:09 PM

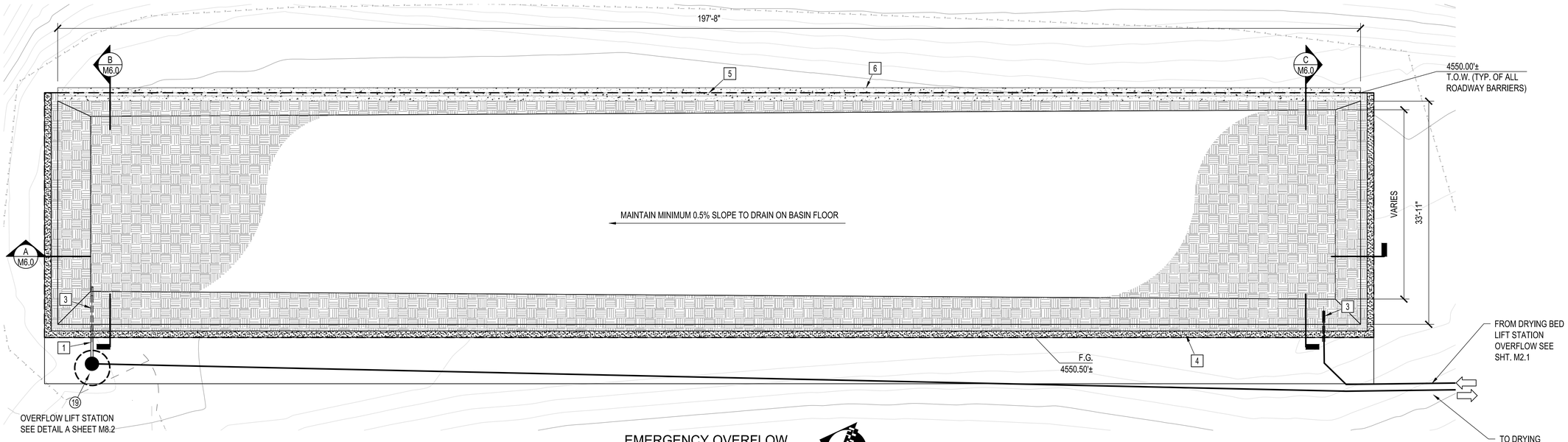

EMERGENCY OVERFLOW
BASIN PLAN VIEW
SCALE: 1/8" = 1'-0"

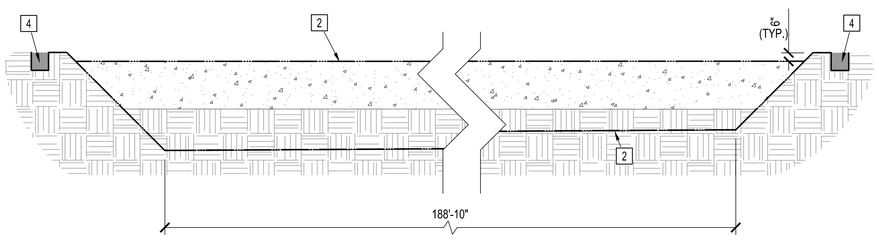

EMERGENCY OVERFLOW BASIN
SECTION - A
SCALE: 1/4" = 1'-0"

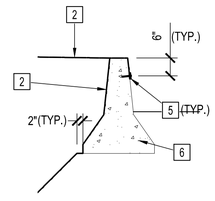

EMERGENCY OVERFLOW BASIN
DETAIL - A
SCALE: 1/2" = 1'-0"

CONSTRUCTION NOTES:

1. INSTALL 4" SDR 35 PVC PIPE.
2. INSTALL HDPE LINER PER SPECIFICATION 31 05 19.16.
3. INSTALL PIPE BOOT PER LINER MANUFACTURER RECOMMENDATIONS AND DETAIL E SHEET M8.3.
4. INSTALL ANCHOR TRENCH PER DETAIL D SHEET M8.3.
5. INSTALL HDPE LINER ANCHOR BOLT, ANCHOR TO EXISTING WALLS PER DETAIL C. SHEET M8.3.
6. PROTECT IN PLACE EXISTING ROADWAY BARRIERS.

NOTES:

1. GRADE ALL BASIN WALLS WITH 1:1 SLOPE TO BASIN FLOOR.
2. SLOPE GRADE MIN 5:1 AWAY AS NEEDED AROUND ENTIRE PERIMETER.
3. CONTRACTOR TO RELOCATE EXISTING ROADWAY BARRIERS FROM ABANDONED BASIN AS NEEDED.

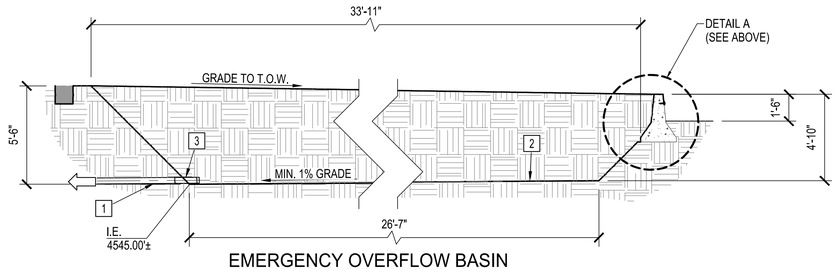

EMERGENCY OVERFLOW BASIN
SECTION - B
SCALE: 1/4" = 1'-0"

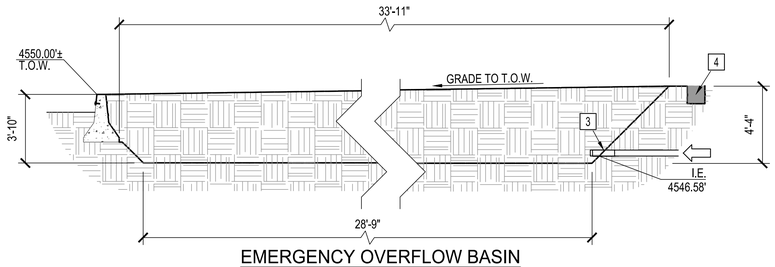

EMERGENCY OVERFLOW BASIN
SECTION - C
SCALE: 1/4" = 1'-0"

THESE DRAWINGS ARE THE PROPERTY OF P.A.C.E. AND SHALL NOT BE REPRODUCED IN ANY MANNER NOR BE USED FOR CONSTRUCTION UNLESS STAMPED 'ISSUED FOR CONSTRUCTION'.

NO	BY	DATE	REVISIONS	DATE	APP.

Registered Professional Engineer (Civil)
CERTIFICATE NO. 70097
Timothy B. Pierce
Signed
ARIZONA, U.S.A.
Expires 12/31/28

PREPARED BY: PACE
DESIGNED BY: NE
DRAWN BY: DS, WW
CHECKED BY: TP
SCALE: AS NOTED
DATE: NOV 2025
JOB NO.: B614

TITLE: EMERGENCY OVERFLOW BASIN PLAN AND SECTIONS

JOB: TOWN OF JEROME WASTEWATER TREATMENT PLANT — YAVAPAI CO. AZ

100% ISSUED FOR BID

PREPARED BY: TAYLOR B. PIERCE — R.C.E 70097 — DATE

PACE
Advanced Water Engineering
8723 E. VIA DE VENTURA, SUITE A-100, SCOTTSDALE, CA 85258
P: (480) 991-3995 | www.pacewater.com

SHEET
M6.0
44 OF 99 SHEETS

JOB NO. B614

W:\B614\Engineering\B614-30sheets\B614 - M6.0 EMERGENCY OVERFLOW STORAGE PLAN.dwg - Tab: M6.0 - by reddington on 11/19/25 at 2:37:31 PM

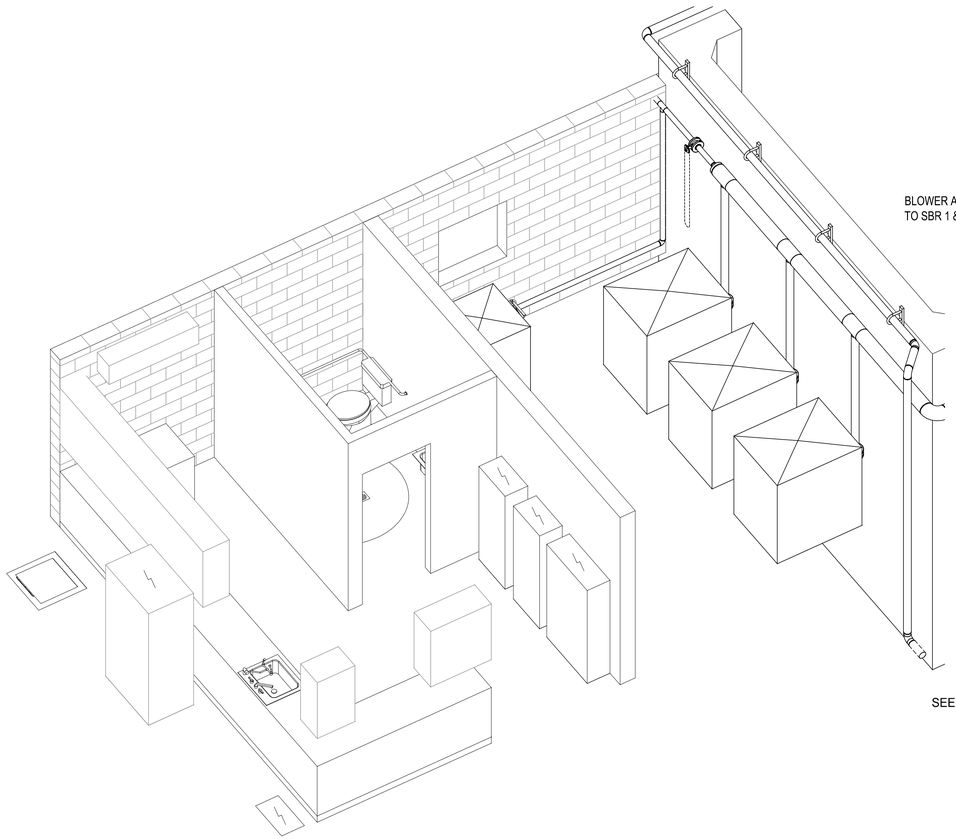

ISOMETRIC VIEW - NE
SCALE: N.T.S.

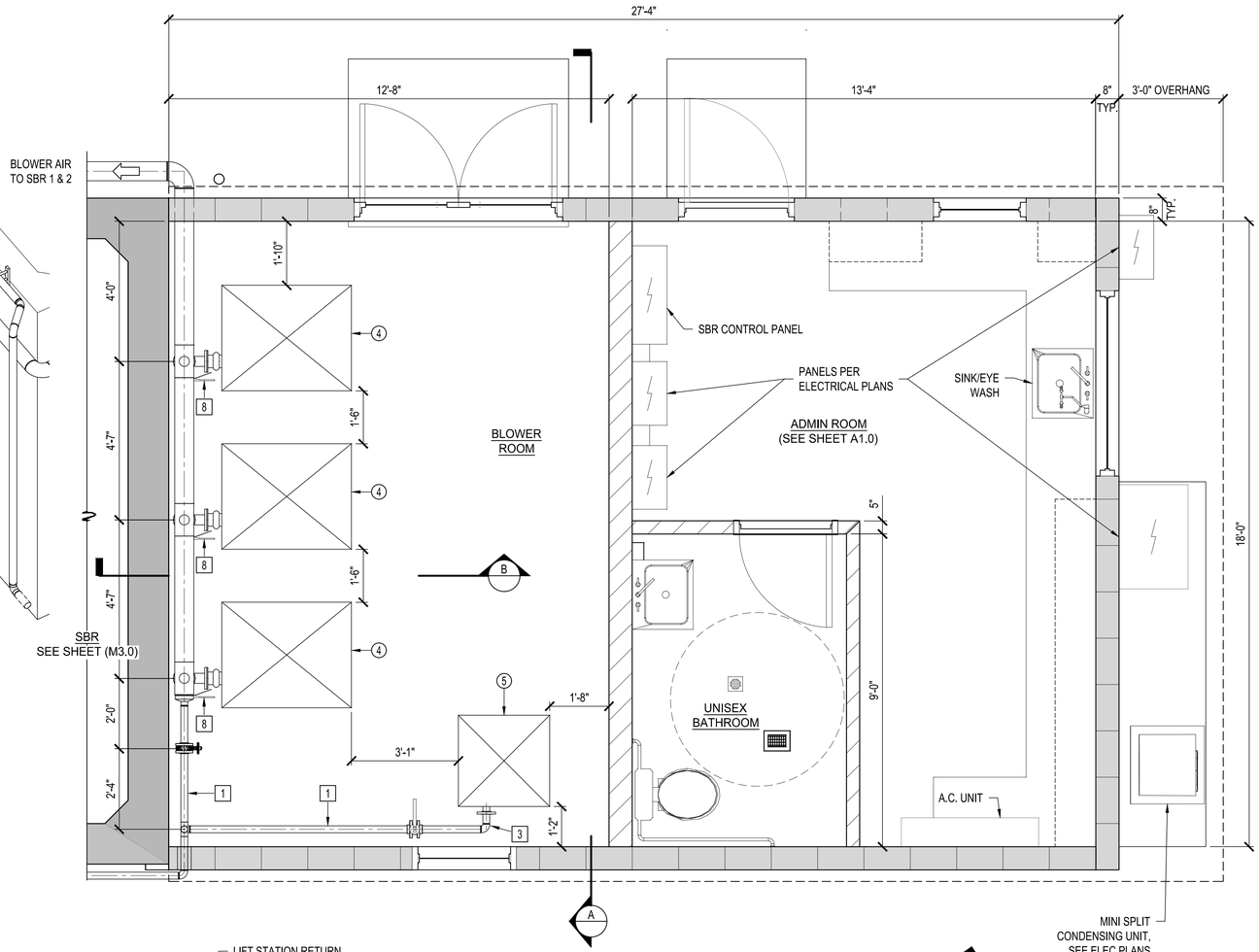

MECHANICAL PLAN - ABOVE
SCALE: 1/2" = 1'-0"

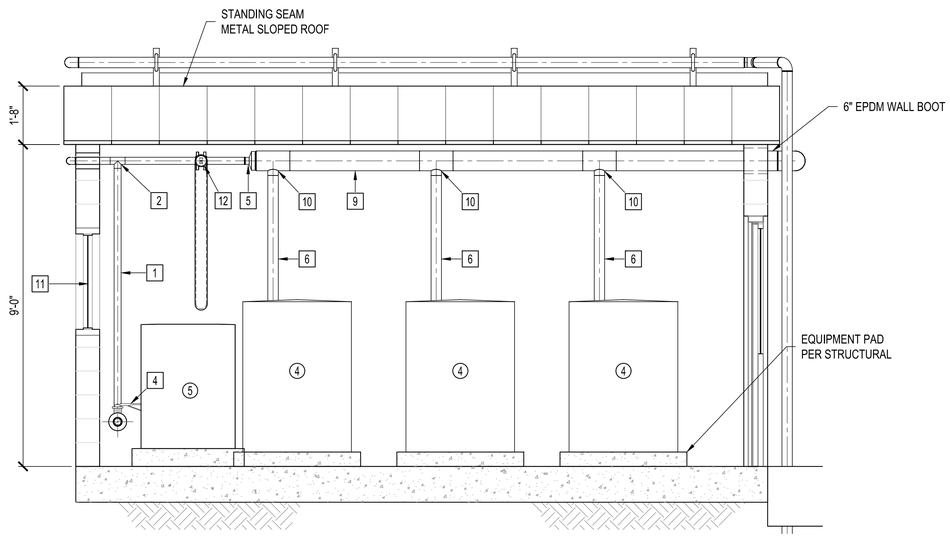

SECTION-A
SCALE: 1/2" = 1'-0"

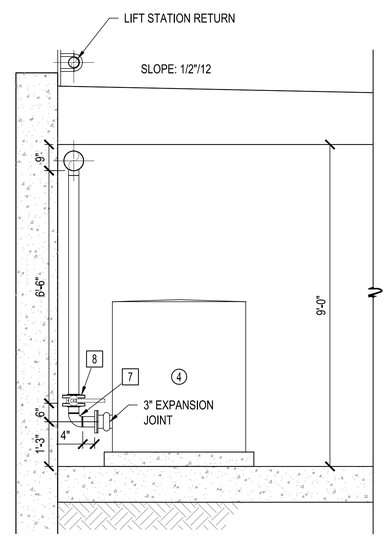

SECTION-B
SCALE: 1/2" = 1'-0"

CONSTRUCTION NOTES:

1. INSTALL 2" SCH. 10 CARBON STEEL PIPE.
2. INSTALL 2" SCH. 10 CARBON STEEL TEE.
3. INSTALL 2" - 90° SCH. 10 CARBON STEEL BEND
4. INSTALL 2" BUTTERFLY VALVE.
5. INSTALL 6"x2" SCH. 10 CARBON STEEL REDUCER.
6. INSTALL 3" SCH. 10 CARBON STEEL PIPE.
7. INSTALL 3" - 90° SCH. 10 CARBON STEEL BEND.
8. INSTALL 3" BUTTERFLY VALVE.
9. INSTALL 6" SCH. 10 CARBON STEEL PIPE.
10. INSTALL 6"x3"x6" SCH. 10 CARBON STEEL TEE.
11. INSTALL 3'x3' ACOUSTICAL LOUVER PER SPECIFICATION 08 9100.
12. INSTALL 2" BUTTERFLY VALVE WITH CHAIN WHEEL

NO	BY	DATE	REVISIONS	DATE	APP.

Registered Professional Engineer (Civil) CERTIFICATE NO. 70097 Signed TAYLOR B. PIERCE ARIZONA, U.S.A. Expires 12/31/28

PREPARED BY: PACE
DESIGNED BY: NE
DRAWN BY: DS, WW
CHECKED BY: TP
SCALE: AS NOTED
DATE: NOV 2025
JOB NO.: B614

THESE DRAWINGS ARE THE PROPERTY OF P.A.C.E. AND SHALL NOT BE REPRODUCED IN ANY MANNER NOR BE USED FOR CONSTRUCTION UNLESS STAMPED 'ISSUED FOR CONSTRUCTION'.

TITLE: **BLOWER OPS PLAN**

JOB: TOWN OF JEROME
WASTEWATER
TREATMENT PLANT
YAVAPAI CO. AZ

100% ISSUED FOR BID

PREPARED BY: PACE
Advanced Water Engineering
8723 E. Vía de Commercio, Suite 2-104 | SCOTTSDALE, CA 85258
P: (408) 991-3595 | www.pacewater.com
TAYLOR B. PIERCE R.C.E 70097 DATE

SHEET
M7.0
45 OF 99 SHEETS

JOB NO. B614

W:\B614-Engineering\B614-03\sheets\B614 - M7.0 BLOWER OPS PLAN AND SECTIONS.dwg - Tab: M7.0 - by reddington on 11/21/25 at 12:21:09 PM

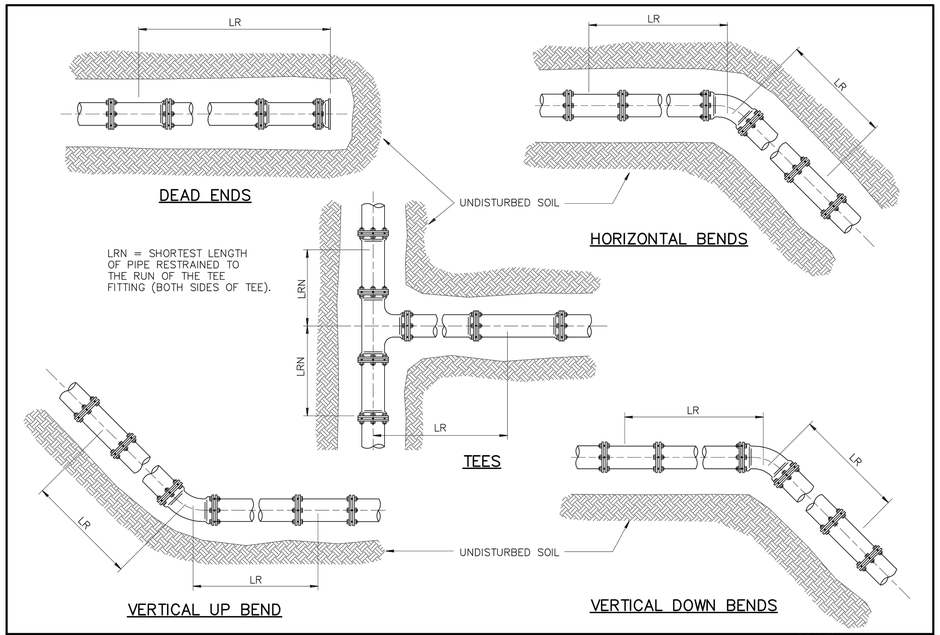

DETAIL NO.			REVISED	DETAIL NO.
303–1	MARICOPA ASSOCIATION of GOVERNMENTS STANDARD DETAIL ENGLISH	JOINT RESTRAINT FOR DUCTILE IRON, POLYETHYLENE WRAPPED DUCTILE IRON AND PVC WATER PIPES	01–01–2019	303–1

M.A.G. STANDARD DETAIL #303-1

N.T.S. | A

RESTRAINED LENGTHS, LR, FOR DUCTILE IRON PIPE

NOMINAL PIPE SIZE INCHES	HORIZONTAL BENDS			TEES		VERTICAL OFFSETS						DEAD ENDS
						90° BEND FITTINGS		45° BEND FITTINGS		22–1/2° BEND FITTINGS		
	90°	45°	22–1/2°	LRN=0'	LRN=10'	DOWN BEND	UP BEND	DOWN BEND	UP BEND	DOWN BEND	UP BEND	
4	18	7	4	30	8	31	18	13	7	6	3	31
6	25	10	5	43	20	44	25	18	10	9	5	44
8	32	13	6	56	34	58	32	24	13	11	6	58
10	38	16	8	68	45	69	38	29	16	14	8	69
12	45	19	9	80	57	81	45	34	19	16	9	81
14	51	21	10	91	68	92	51	38	21	18	10	92
16	57	24	11	103	79	104	57	43	24	21	11	104
18	62	26	12	113	90	115	62	48	26	23	12	115
20	68	28	14	125	100	126	68	52	28	25	14	126
24	79	33	16	145	121	147	79	61	33	29	16	147

RESTRAINED LENGTHS, LR, FOR DUCTILE IRON WITH POLYETHYLENE WRAP AND PVC PIPE

NOMINAL PIPE SIZE INCHES	HORIZONTAL BENDS			TEES		VERTICAL OFFSETS						DEAD ENDS
						90° BEND FITTINGS		45° BEND FITTINGS		22–1/2° BEND FITTINGS		
	90°	45°	22–1/2°	LRN=0'	LRN=10'	DOWN BEND	UP BEND	DOWN BEND	UP BEND	DOWN BEND	UP BEND	
4	26	11	5	69	18	72	26	30	11	14	5	72
6	36	15	7	99	47	102	36	42	15	20	7	102
8	47	19	9	130	78	133	47	55	19	26	9	133
10	56	23	11	157	103	159	56	66	23	32	11	159
12	65	27	13	185	131	187	65	77	27	37	13	187
14	74	31	15	211	156	214	74	89	31	42	15	214
16	82	34	16	238	183	241	82	100	34	48	16	241
18	90	37	18	263	207	266	90	110	38	53	18	266
20	98	41	20	289	233	292	98	121	41	58	20	292
24	113	47	22	337	280	340	113	141	47	68	22	340

NOTES:

1. ALL JOINTS WITHIN THE SPECIFIED LENGTH LR MUST BE RESTRAINED. ALL LENGTHS ARE GIVEN IN FEET.
2. THE MAXIMUM TEST PRESSURE SHALL NOT EXCEED 200 PSI
3. THE MINIMUM DEPTH OF BURY SHALL BE 3' TO TOP OF PIPE.
4. RESTRAINED LENGTHS MAY BE REDUCED WHEN SUPPORTED BY ENGINEERING CALCULATIONS.

DETAIL NO.			REVISED	DETAIL NO.
303–2	MARICOPA ASSOCIATION of GOVERNMENTS STANDARD DETAIL ENGLISH	JOINT RESTRAINT FOR DUCTILE IRON, POLYETHYLENE WRAPPED DUCTILE IRON AND PVC WATER PIPES	01–01–2019	303–2

M.A.G. STANDARD DETAIL #303-2

N.T.S. | B

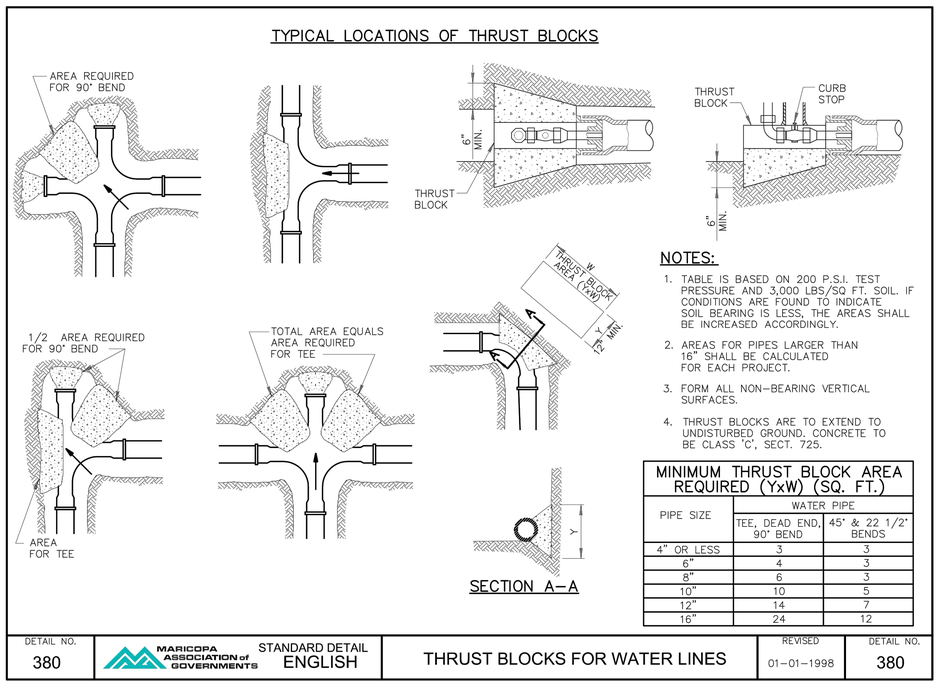

NOTES:

1. TABLE IS BASED ON 200 P.S.I. TEST PRESSURE AND 3,000 LBS/SQ FT. SOIL. IF CONDITIONS ARE FOUND TO INDICATE SOIL BEARING IS LESS, THE AREAS SHALL BE INCREASED ACCORDINGLY.
2. AREAS FOR PIPES LARGER THAN 16" SHALL BE CALCULATED FOR EACH PROJECT.
3. FORM ALL NON–BEARING VERTICAL SURFACES.
4. THRUST BLOCKS ARE TO EXTEND TO UNDISTURBED GROUND. CONCRETE TO BE CLASS 'C', SECT. 725.

MINIMUM THRUST BLOCK AREA REQUIRED (YxW) (SQ. FT.)

PIPE SIZE	WATER PIPE	
	TEE, DEAD END, 90° BEND	45° & 22 1/2° BENDS
4" OR LESS	3	3
6"	4	3
8"	6	3
10"	10	5
12"	14	7
16"	24	12

DETAIL NO.			REVISED	DETAIL NO.
380	MARICOPA ASSOCIATION of GOVERNMENTS STANDARD DETAIL ENGLISH	THRUST BLOCKS FOR WATER LINES	01–01–1998	380

M.A.G. STANDARD DETAIL #380

N.T.S. | C

PIPE SIZE	MIN BAR SIZE	"A"–DIMENSION HOOK	MIN. * BLOCK DIM.
6"	#6	6"	3' x 3' x 3'
8"	#6	9"	4' x 4' x 2.5'
12"	#8	9"	4' x 4' x 5'

* FOR 125 P.S.I. WORKING PRESSURE.

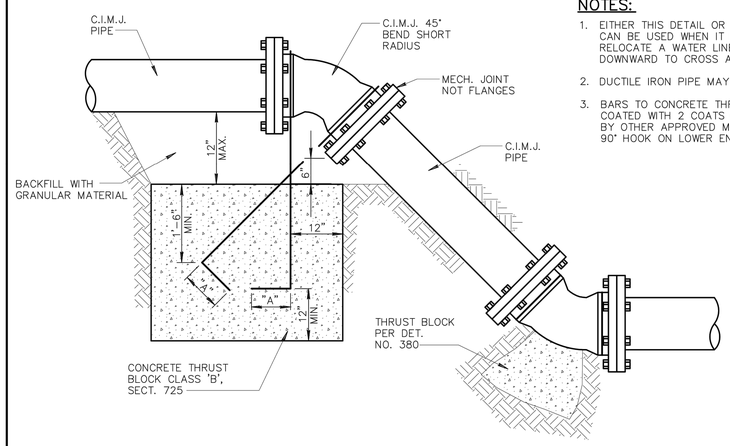

NOTES:

1. EITHER THIS DETAIL OR RESTRAINT RODS CAN BE USED WHEN IT IS ALLOWED TO RELOCATE A WATER LINE UPWARD OR DOWNWARD TO CROSS A CONFLICT.
2. DUCTILE IRON PIPE MAY BE USED.
3. BARS TO CONCRETE THRUST BLOCK TO BE COATED WITH 2 COATS COAL TAR, EPOXY OR BY OTHER APPROVED METHOD. BARS TO HAVE 90° HOOK ON LOWER END, AS PER TABLE.

DETAIL NO.			REVISED	DETAIL NO.
381	MARICOPA ASSOCIATION of GOVERNMENTS STANDARD DETAIL ENGLISH	ANCHOR BLOCKS FOR VERTICAL BENDS	01–01–1998	381

M.A.G. STANDARD DETAIL #381

N.T.S. | D

NO	BY	DATE	REVISIONS	DATE	APP.

Registered Professional Engineer (Civil) CERTIFICATE NO. 70097 Timothy B. Pace Signed ARIZONA, U.S.A. Expires 12/31/28

PREPARED BY: PACE
DESIGNED BY: NE
DRAWN BY: DS, WW
CHECKED BY: TP
SCALE: AS NOTED
DATE: NOV 2025
JOB NO. B614

THESE DRAWINGS ARE THE PROPERTY OF P.A.C.E. AND SHALL NOT BE REPRODUCED IN ANY MANNER NOR BE USED FOR CONSTRUCTION UNLESS STAMPED 'ISSUED FOR CONSTRUCTION'.

TITLE: MECHANICAL DETAILS I

JOB: TOWN OF JEROME WASTEWATER TREATMENT PLANT — YAVAPAI CO. AZ

100% ISSUED FOR BID

PREPARED BY: TAYLOR B. PIERCE — R.C.E 70097 — DATE

PACE
Advanced Water Engineering
8723 E. Via de Ventura, Suite A-110, SCOTTSDALE, CA 85258
P: (480) 991-3595 | www.pacewater.com

SHEET M8.0
46 OF 99 SHEETS

JOB NO. B614

W:\B614\Engineering\B614-3\sheets\B614 - M8.0 MECHANICAL DETAILS.dwg - Tab: M8.0 - by maddington on 02/23/26 at 12:41:49 PM

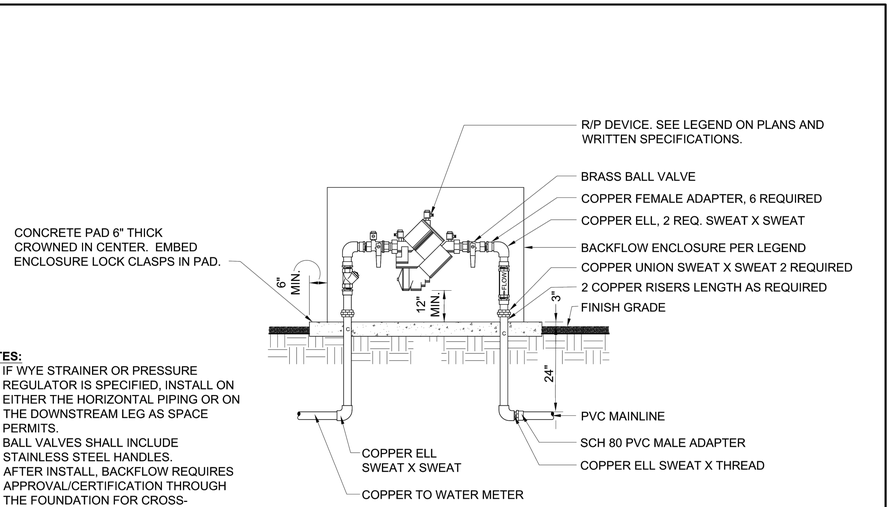

NOTES:

1. IF WYE STRAINER OR PRESSURE REGULATOR IS SPECIFIED, INSTALL ON EITHER THE HORIZONTAL PIPING OR ON THE DOWNSTREAM LEG AS SPACE PERMITS.
2. BALL VALVES SHALL INCLUDE STAINLESS STEEL HANDLES.
3. AFTER INSTALL, BACKFLOW REQUIRES APPROVAL/CERTIFICATION THROUGH THE FOUNDATION FOR CROSS-CONNECTION CONTROL AND HYDRAULIC RESEARCH (USC), OR A THIRD-PARTY CERTIFYING ENTITY THAT IS UNRELATED TO THE PRODUCT'S MANUFACTURER OR VENDOR, THAT IS APPROVED BY THE ARIZONA DEPARTMENT OF ENVIRONMENTAL QUALITY.

DETAIL NO.			REVISED	DETAIL NO.
611-1	MARICOPA ASSOCIATION of GOVERNMENTS STANDARD DETAIL ENGLISH	BACKFLOW PREVENTER ASSEMBLY (2" DIA. & SMALLER)	01-01-2023	611-1

M.A.G. STANDARD DETAIL #611-1

N.T.S. | A

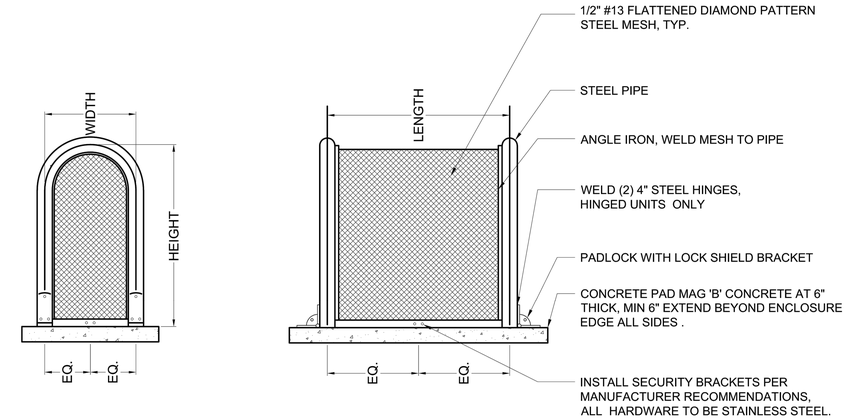

NOTES:

1. ENCLOSURE SHALL BE POWDER COATED BY MANUFACTURER.
2. SEE LEGEND FOR REQUIRED SIZE & COLOR.
3. CONTRACTOR SHALL SUPPLY CONCRETE PAD.

CENTERLINE DIMENSIONS	TYPE
12"W X 18"H X 12"L	LIFT OFF UNIT
12"W X 24"H X 24"L	LIFT OFF UNIT
12"W X 24"H X 32"L	LIFT OFF UNIT
12"W X 24"H X 42"L	HINGED UNIT
12"W X 30"H X 42"L	HINGED UNIT
18"W X 30"H X 48"L	HINGED UNIT

DETAIL NO.			REVISED	DETAIL NO.
611-3	MARICOPA ASSOCIATION of GOVERNMENTS STANDARD DETAIL ENGLISH	ENCLOSURE CAGE FOR BACKFLOW PREVENTER	01-01-2023	611-3

M.A.G. STANDARD DETAIL #611-3

N.T.S. | B

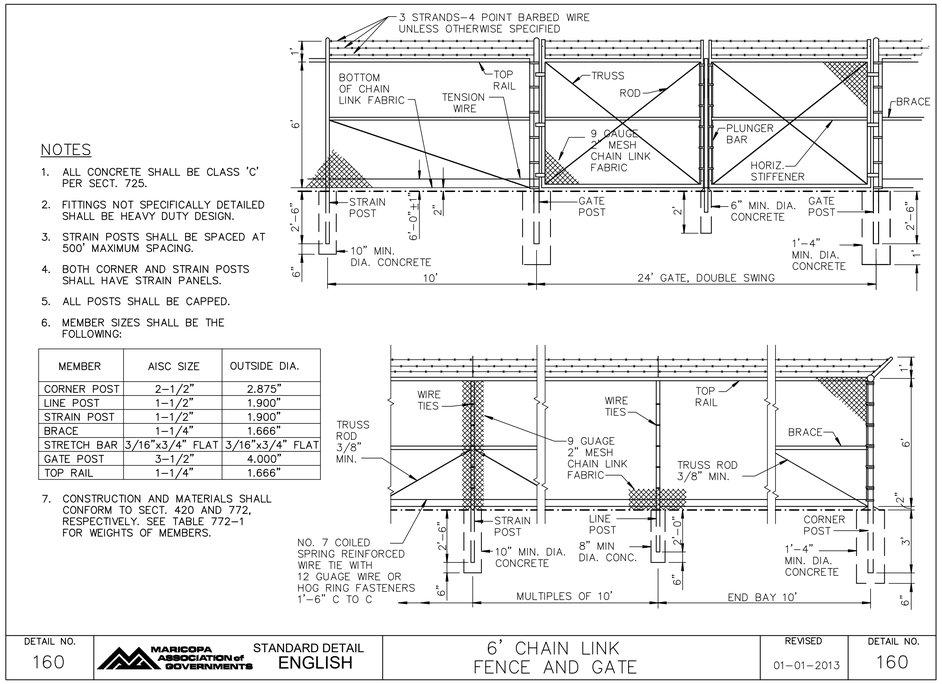

NOTES

1. ALL CONCRETE SHALL BE CLASS 'C' PER SECT. 725.
2. FITTINGS NOT SPECIFICALLY DETAILED SHALL BE HEAVY DUTY DESIGN.
3. STRAIN POSTS SHALL BE SPACED AT 500' MAXIMUM SPACING.
4. BOTH CORNER AND STRAIN POSTS SHALL HAVE STRAIN PANELS.
5. ALL POSTS SHALL BE CAPPED.
6. MEMBER SIZES SHALL BE THE FOLLOWING:

MEMBER	AISC SIZE	OUTSIDE DIA.
CORNER POST	2–1/2"	2.875"
LINE POST	1–1/2"	1.900"
STRAIN POST	1–1/2"	1.900"
BRACE	1–1/4"	1.666"
STRETCH BAR	3/16"x3/4" FLAT	3/16"x3/4" FLAT
GATE POST	3–1/2"	4.000"
TOP RAIL	1–1/4"	1.666"

7. CONSTRUCTION AND MATERIALS SHALL CONFORM TO SECT. 420 AND 772, RESPECTIVELY. SEE TABLE 772–1 FOR WEIGHTS OF MEMBERS.

DETAIL NO.			REVISED	DETAIL NO.
160	MARICOPA ASSOCIATION of GOVERNMENTS STANDARD DETAIL ENGLISH	6' CHAIN LINK FENCE AND GATE	01–01–2013	160

M.A.G. STANDARD DETAIL #160

N.T.S. | C

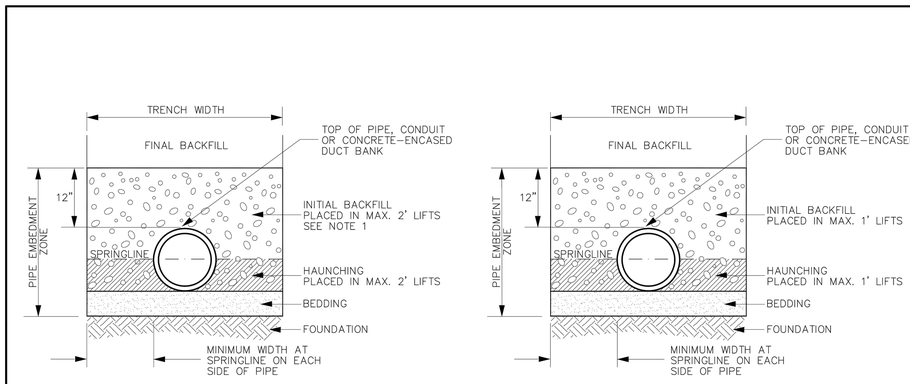

TRENCH-CROSS SECTION DETAIL
RIGID PIPE

TRENCH-CROSS SECTION DETAIL
FLEXIBLE PIPE

NOTES:

1. BEDDING, HAUNCHING AND INITIAL BACKFILL MATERIAL SHALL BE ABC PER SECTION 702. SEE SECTION 601 FOR ALTERNATIVE MATERIALS TO BE USED WITH AGENCY APPROVAL INCLUDING MAXIMUM 1–1/2" NATIVE MATERIAL FOR CONCRETE PIPE INITIAL BACKFILL.
2. SEE SECTION 601 FOR ADDITIONAL TRENCH WIDTH, EXCAVATION, BACKFILLING AND COMPACTION REQUIREMENTS.
3. SEE SECTION 601 FOR PIPE MATERIALS CONSIDERED AS RIGID OR FLEXIBLE.

DETAIL NO.			REVISED	DETAIL NO.
200-3	MARICOPA ASSOCIATION of GOVERNMENTS STANDARD DETAIL ENGLISH	TRENCH BACKFILL AND SURFACE REPLACEMENT	01-01-2023	200-3

M.A.G. STANDARD DETAIL #200-3

N.T.S. | D

NO	BY	DATE	REVISIONS	DATE	APP.

Registered Professional Engineer (Civil) CERTIFICATE NO. 70097 TAYLOR B. PIERCE Signed ARIZONA, U.S.A. Expires 12/31/28

THESE DRAWINGS ARE THE PROPERTY OF P.A.C.E. AND SHALL NOT BE REPRODUCED IN ANY MANNER NOR BE USED FOR CONSTRUCTION UNLESS STAMPED 'ISSUED FOR CONSTRUCTION'.

PREPARED BY: PACE
DESIGNED BY: NE
DRAWN BY: DS, WW
CHECKED BY: TP
SCALE: AS NOTED
DATE: NOV 2025
JOB NO.: B614

TITLE: MECHANICAL DETAILS II

JOB: TOWN OF JEROME WASTEWATER TREATMENT PLANT — YAVAPAI CO. AZ

100% ISSUED FOR BID

PREPARED BY: TAYLOR B. PIERCE R.C.E 70097 DATE

PACE
Advanced Water Engineering
8721 E. Via de Ventura, Suite 110, SCOTTSDALE, CA 85258
P: (480) 991-3595 | www.pacewater.com

SHEET M8.1
47 OF 99 SHEETS

JOB NO. B614

W:\B614\Engineering\B614-30\sheets\B614 - M8.0 MECHANICAL DETAILS.dwg - Tab: M8.1 - by maddingtonjon on 02/23/26 at 12:41:49 PM

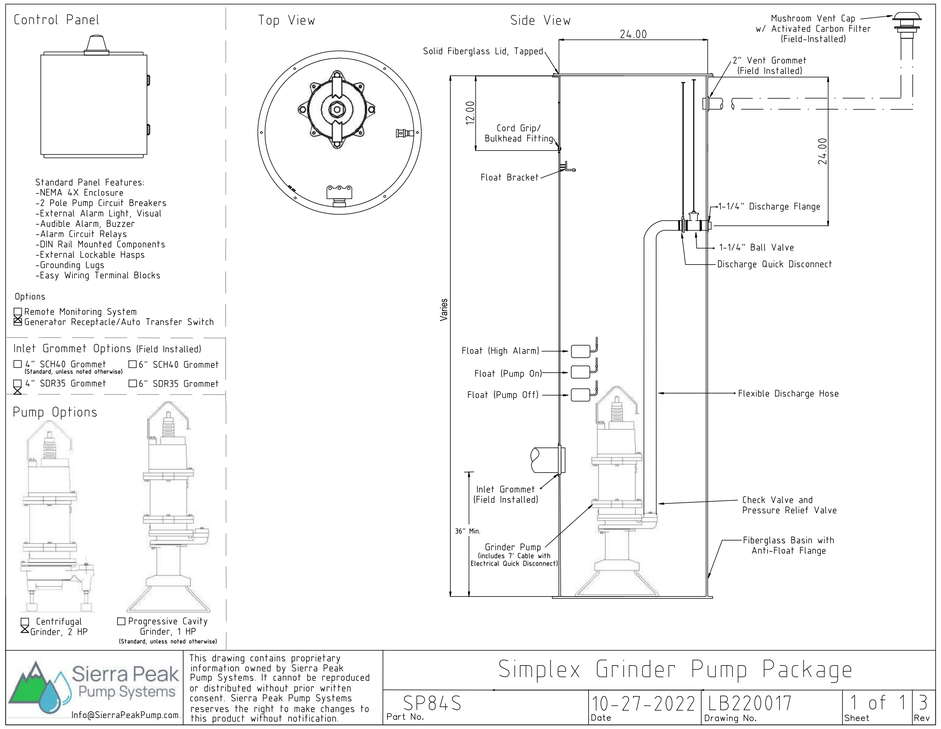

OVERFLOW LIFT STATION / OR EQUAL

N.T.S. | A

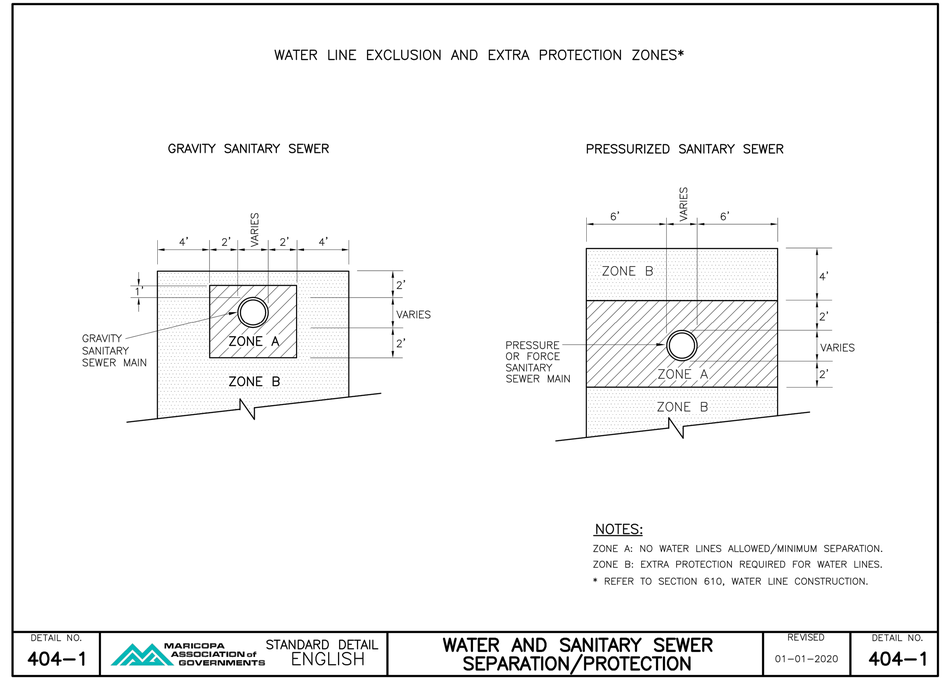

M.A.G. STANDARD DETAIL #404-1

N.T.S. | B

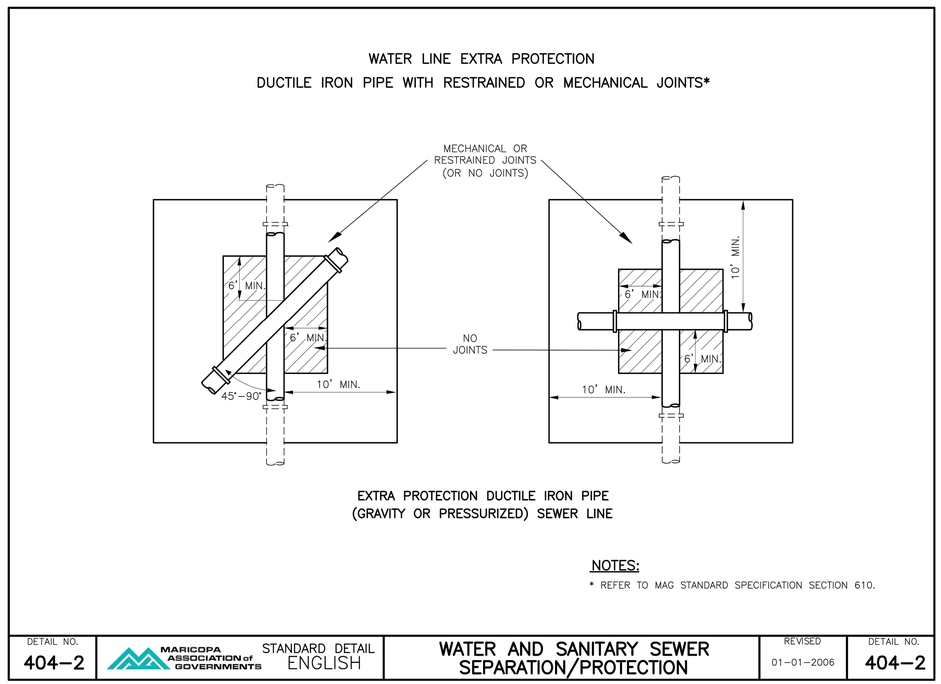

M.A.G. STANDARD DETAIL #404-2

N.T.S. | C

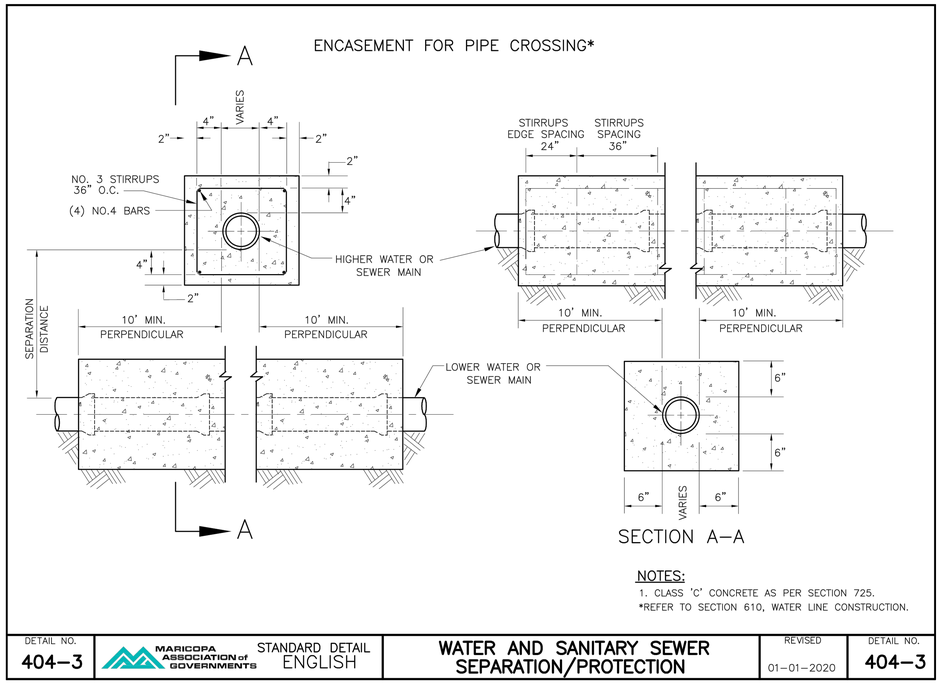

M.A.G. STANDARD DETAIL #404-3

N.T.S. | D

NO	BY	DATE	REVISIONS	DATE	APP.

Registered Professional Engineer (Civil) CERTIFICATE NO. 70097 Timothy B. Pierce Signed 12/31/25 ARIZONA, U.S.A. Expires 12/31/28

PREPARED BY: PACE
DESIGNED BY: NE
DRAWN BY: DS, WW
CHECKED BY: TP
SCALE: AS NOTED
DATE: NOV 2025
JOB NO.: B614

THESE DRAWINGS ARE THE PROPERTY OF P.A.C.E. AND SHALL NOT BE REPRODUCED IN ANY MANNER NOR BE USED FOR CONSTRUCTION UNLESS STAMPED 'ISSUED FOR CONSTRUCTION'.

TITLE: MECHANICAL DETAILS III

JOB: TOWN OF JEROME WASTEWATER TREATMENT PLANT YAVAPAI CO. AZ

100% ISSUED FOR BID

PREPARED BY: TAYLOR B. PIERCE R.C.E 70097 DATE
PACE Advanced Water Engineering
8723 E. Via de Commercio, Suite 110, SCOTTSDALE, CA 85258
P: (480) 991-3595 | www.pacewater.com

SHEET M8.2
48 OF 99 SHEETS

JOB NO. B614

W:\B614\Engineering\B614-30sheets\B614 - M8.0 MECHANICAL DETAILS.dwg - Tab: M8.2 - by naddington on 02/23/26 at 12:41:49 PM

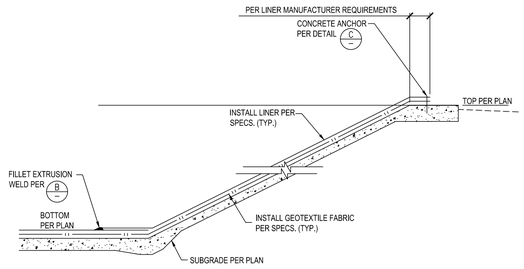

TYPICAL LINER SECTION 1"=1'-0" A

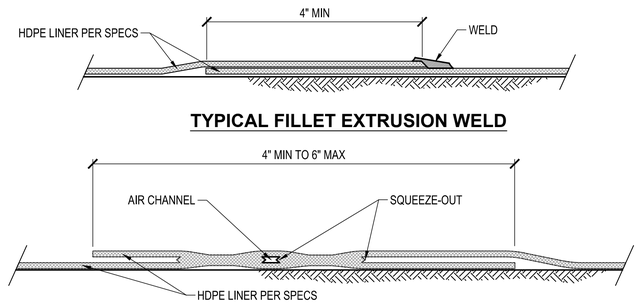

WELD DETAIL N.T.S. B

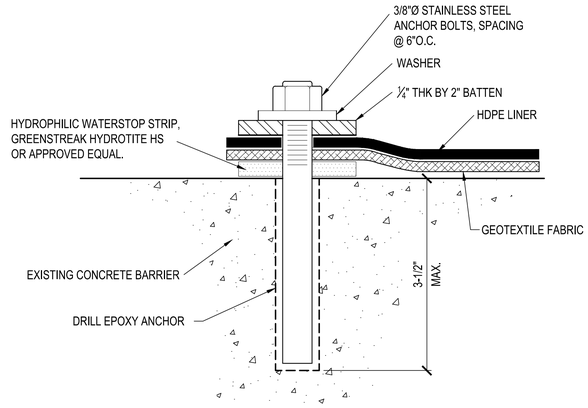

CONCRETE ANCHOR 1"=1'-0" C

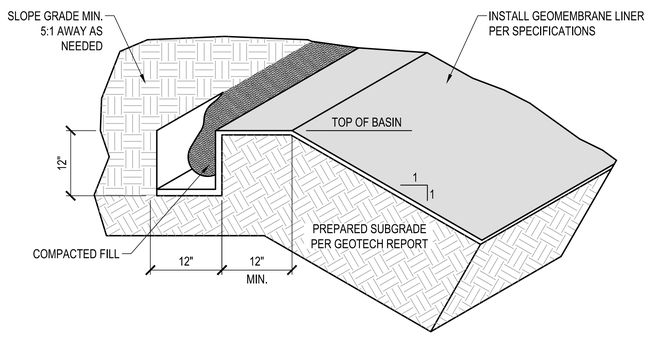

ANCHOR TRENCH N.T.S. D

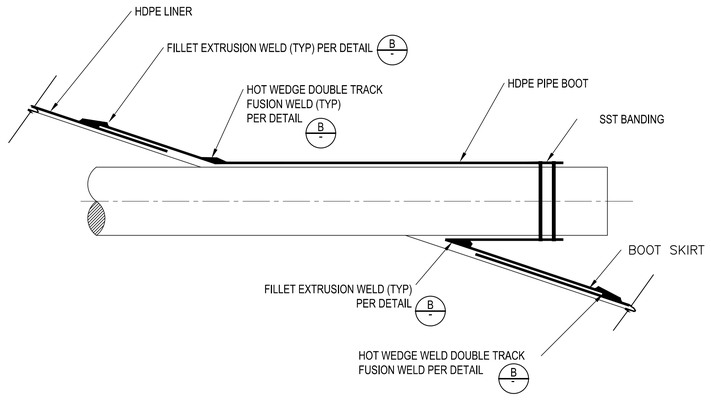

PIPE BOOT 1" = 1'-0" E

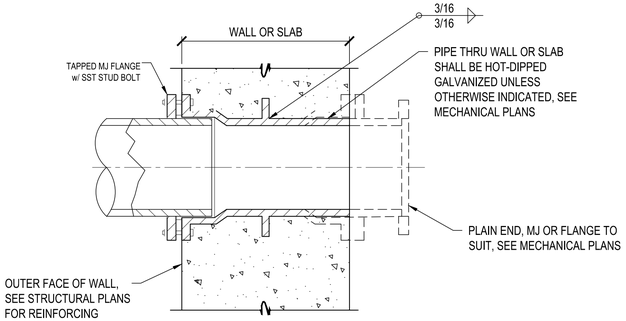

NOTE:
COAT PIPE WITH SPECIFIED PAINT SYSTEM PRIOR TO CONCRETE PLACEMENT

MECHANICAL JOINT WALL SLEEVE F

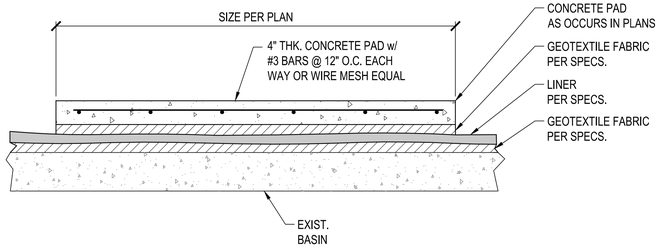

CONCRETE PAD OVER LINER 1"=1'-0" G

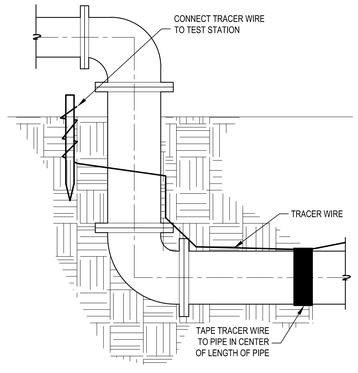

TRACER WIRE N.T.S. H

CONSTRUCTION NOTES

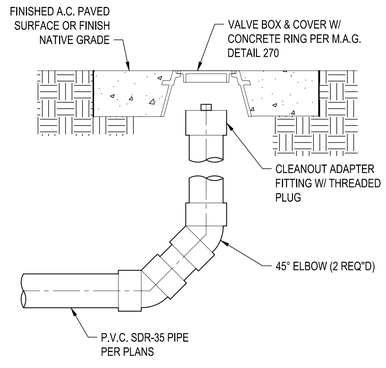

1. INSTALL CONCRETE COLLAR, CONTRACTOR SHALL CONTAIN A MIN. OF 6 1/2 SACKS OF CEMENT PER CUBIC YARD & ATTAIN A COMPRESSIVE STRENGTH OF 4,500 P.S.I. AFTER 28 DAYS IN ACCORDANCE W/ A.S.T.M. C39/C39M-99
2. INSTALL 6" SDR-35 P.V.C. PIPE & ELBOW FOR HEADER PIPE CLEANOUT. INSTALL 4" SDR-35 P.V.C. PIPE FOR PERFORATED PIPELINE CLEANOUT

NOTE:
CLEANOUT RING & COVER SHALL BE RAISED TO FINISH GRADE & SUPPORT COLLAR INSTALLED AFTER PAVING OR FINISH GRADING HAS BEEN COMPLETED. CONTRACTOR SHALL COMPACT THE AREA UNDER CONCRETE COLLAR TO THE SATISFACTION OF THE ENGINEER BEFORE PLACING CONCRETE.

CLEANOUT N.T.S. I

100% ISSUED FOR BID

NO	BY	DATE	REVISIONS	DATE	APP.

Registered Professional Engineer (Civil) CERTIFICATE NO. 70097 TAYLOR B. PIERCE Signed ARIZONA, U.S.A. Expires 12/31/28

PREPARED BY: PACE
DESIGNED BY: NE
DRAWN BY: DS, WW
CHECKED BY: TP
SCALE: AS NOTED
DATE: NOV 2025
JOB NO.: B614

THESE DRAWINGS ARE THE PROPERTY OF P.A.C.E. AND SHALL NOT BE REPRODUCED IN ANY MANNER NOR BE USED FOR CONSTRUCTION UNLESS STAMPED 'ISSUED FOR CONSTRUCTION'.

TITLE
MECHANICAL DETAILS IV

JOB
TOWN OF JEROME
WASTEWATER
TREATMENT PLANT
YAVAPAI CO. AZ

PACE
Advanced Water Engineering
8723 E. Via de Commercio, Suite 2, SCOTTSDALE, CA 85258
P: (480) 991-3995 | www.paceaz.com

PREPARED BY: TAYLOR B. PIERCE R.C.E 70097 DATE

SHEET
M8.3
49 OF 99 SHEETS

JOB NO. B614

W:\B614\Engineering\B614-30\sheets\B614 - M8.0 MECHANICAL DETAILS.dwg - Tab: M8.3 - by noddington on 02/23/26 at 12:41:49 PM

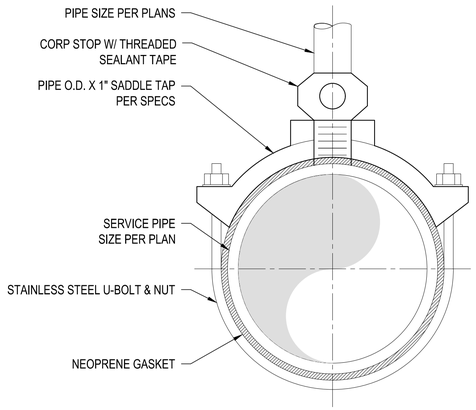

SADDLE TAP

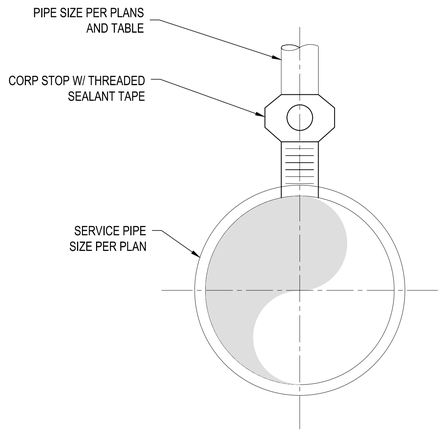

DIRECT TAP

SIZE (in.)	PRESSURE CLASS				
	150	200	250	300	350
	MAXIMUM RECOMMENDED DIRECT TAP SIZE (inch)				
3	-	-	-	-	3/4
4	-	-	-	-	3/4
6	-	-	-	-	1
8	-	-	-	-	1
10	-	-	-	-	1
12	-	-	-	-	1 1/4
14	-	-	1 1/4	1 1/2	1 1/2
16	-	-	1 1/2	2	2
18	-	-	2	2	2
20	-	-	2	2	2
24	-	2	2	2	2

PIPE TAP

N.T.S. **A**

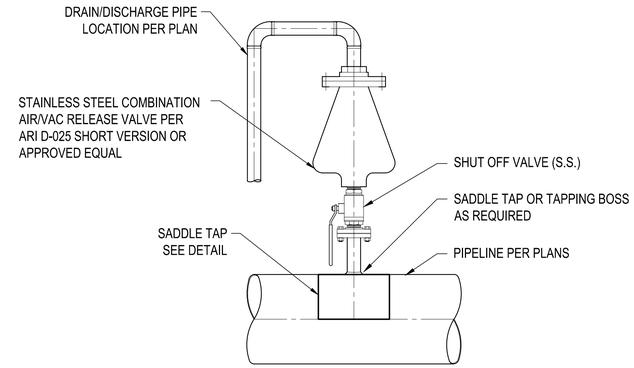

AIR/VAC RELEASE VALVE

N.T.S. **B**

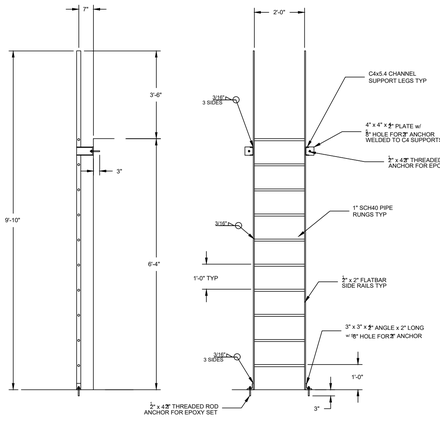

NOTES:

1. ALL MATERIALS SHALL BE CARBON STEEL.
2. ALL MATERIALS TO BE SHOP PRIMED W/ CARBOLINE 150 AFTER FABRICATION.

SHIP LADDER

N.T.S. **C**

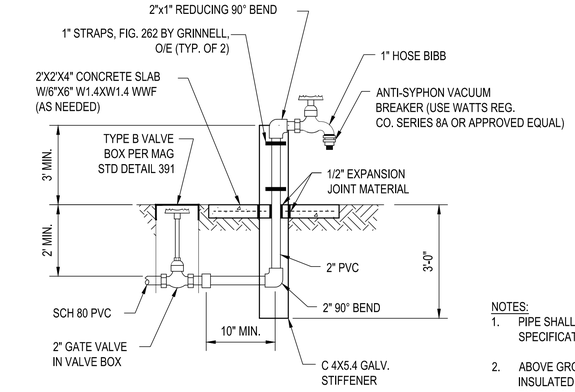

NOTES:

1. PIPE SHALL BE COLOR-CODED PER SPECIFICATIONS
2. ABOVE GROUND PIPING SHALL BE INSULATED PER SPECIFICATIONS. EXTEND INSULATION TO 12" BELOW GROUND.

HOSE BIB

N.T.S. **D**

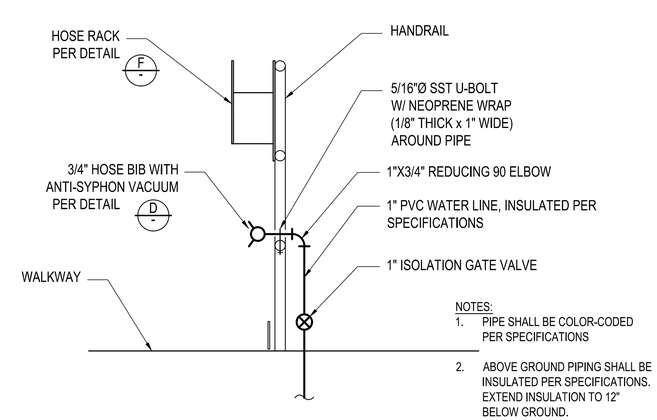

NOTES:

1. PIPE SHALL BE COLOR-CODED PER SPECIFICATIONS
2. ABOVE GROUND PIPING SHALL BE INSULATED PER SPECIFICATIONS. EXTEND INSULATION TO 12" BELOW GROUND.

RAIL MOUNTED HOSE VALVE

N.T.S. **E**

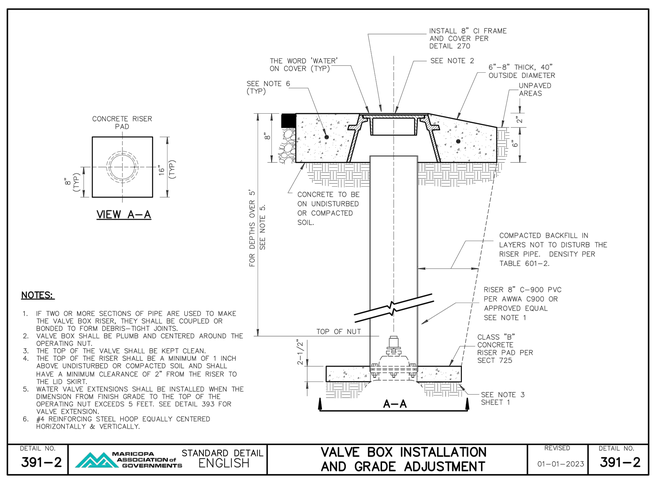

NOTES:

1. IF TWO OR MORE SECTIONS OF PIPE ARE USED TO MAKE THE VALVE BOX RISER, THEY SHALL BE COUPLED OR BONDED TO FORM DEBRIS-TIGHT JOINTS.
2. VALVE BOX SHALL BE PLUMB AND CENTERED AROUND THE OPERATING NUT.
3. THE TOP OF THE VALVE SHALL BE KEPT CLEAN.
4. THE TOP OF THE RISER SHALL BE A MINIMUM OF 1 INCH ABOVE UNDISTURBED OR COMPACTED SOIL AND SHALL HAVE A MINIMUM CLEARANCE OF 2" FROM THE RISER TO THE LID SKIRT.
5. WATER VALVE EXTENSIONS SHALL BE INSTALLED WHEN THE DIMENSION FROM FINISH GRADE TO THE TOP OF THE OPERATING NUT EXCEEDS 5 FEET. SEE DETAIL 393 FOR VALVE EXTENSION.
6. #4 REINFORCING STEEL HOOP EQUALLY CENTERED HORIZONTALLY & VERTICALLY.

DETAIL NO.	STANDARD DETAIL		REVISED	DETAIL NO.
391–2	MARICOPA ASSOCIATION of GOVERNMENTS	VALVE BOX INSTALLATION AND GRADE ADJUSTMENT	01–01–2023	391–2

VALVE BOX

N.T.S. **F**

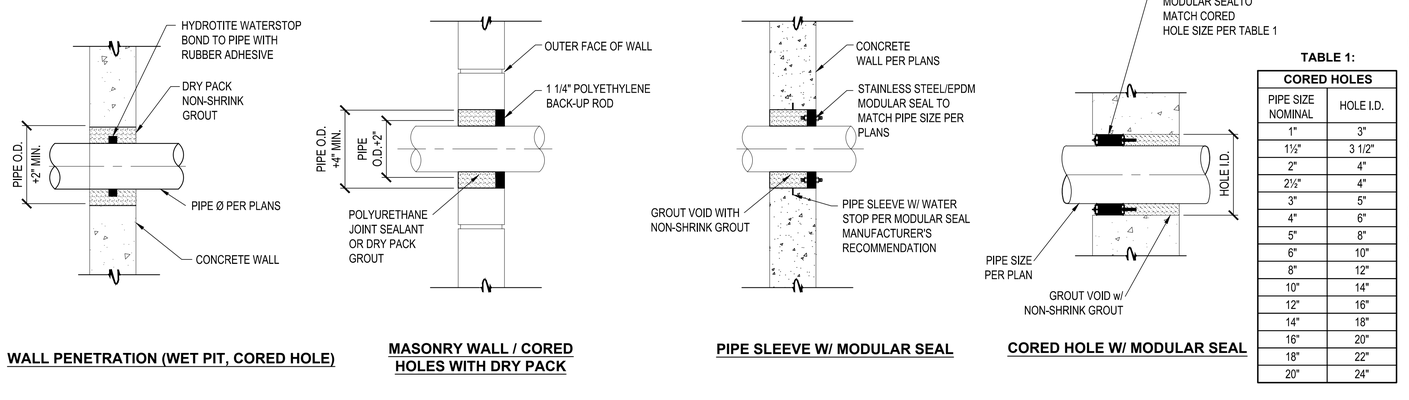

TABLE 1:

CORED HOLES	
PIPE SIZE NOMINAL	HOLE I.D.
1"	3"
1½"	3 1/2"
2"	4"
2½"	4"
3"	5"
4"	6"
5"	8"
6"	10"
8"	12"
10"	14"
12"	16"
14"	18"
16"	20"
18"	22"
20"	24"

PIPE PENETRATION DETAIL

N.T.S. **G**

100% ISSUED FOR BID

PREPARED BY: TAYLOR B. PIERCE R.C.E 70097 DATE

PACE
Advanced Water Engineering
8723 E. Via de Ventura, Suite 220, Scottsdale, CA 85258
P: (480) 991-3595 | www.pacewater.com

JOB: TOWN OF JEROME WASTEWATER TREATMENT PLANT YAVAPAI CO. AZ

TITLE: MECHANICAL DETAILS V

SHEET M8.4 50 OF 99 SHEETS

JOB NO. B614

NO	BY	DATE	REVISIONS	DATE	APP.

Registered Professional Engineer (Civil) CERTIFICATE NO. 70097 Timothy B. Pierce Signed 12/31/25 ARIZONA, U.S.A. Expires 12/31/28

PREPARED BY: PACE | DESIGNED BY: NE | DRAWN BY: DS, WW | CHECKED BY: TP | SCALE: AS NOTED | DATE: NOV 2025 | JOB NO.: B614

THESE DRAWINGS ARE THE PROPERTY OF P.A.C.E. AND SHALL NOT BE REPRODUCED IN ANY MANNER NOR BE USED FOR CONSTRUCTION UNLESS STAMPED 'ISSUED FOR CONSTRUCTION'.

W:\B614\Engineering\B614-Shtsheets\B614 - M8.0 MECHANICAL DETAILS.dwg - Tab: M8.4 - by reddington on 12/22/26 at 12:41:49 PM

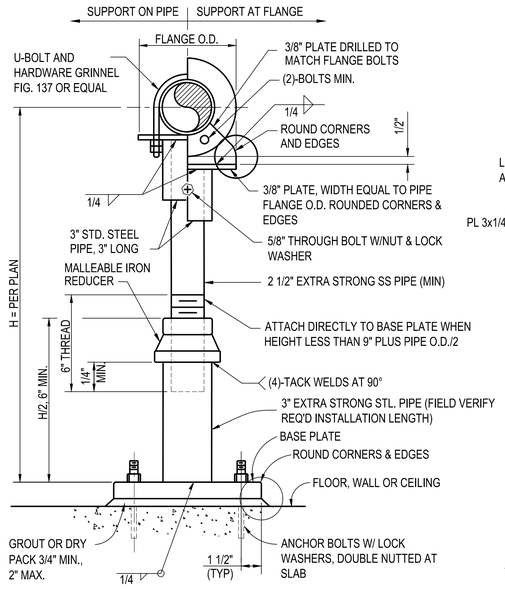

LOCATION	MEMBER	
	BASE PLATE	ANCHOR BOLTS
FLOOR	3/8 X 9 X 9	4-5/8"
CEILING	5/8 X 9 X 9	4-3/4"
WALL	5/8 X 9 X 9	4-3/4"

NOTES:
1. AS AN ALTERNATE, IF ADJUSTMENT IS NOT NECESSARY, DELETE 2 1/2" PIPE AND REDUCER AND WELD 3" STEEL PIPE DIRECTLY TO 3/8" PLATE ATTACHED TO PIPE FLANGE.
2. PIPE SUPPORT MAY BE ORIENTATED IN ANY DIRECTION.
3. FOR H > 3'-0", CONTRACTOR SHALL USE GRINNELL FIG. 264 AS APPROVED BY ENGINEER.

S1

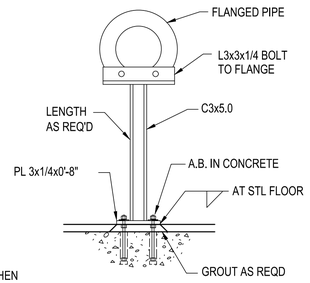

S2

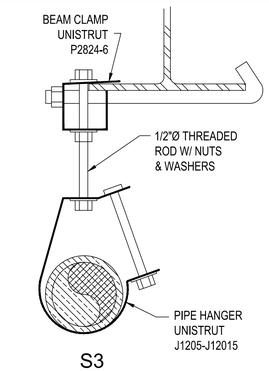

S3

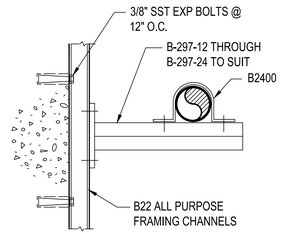

S4

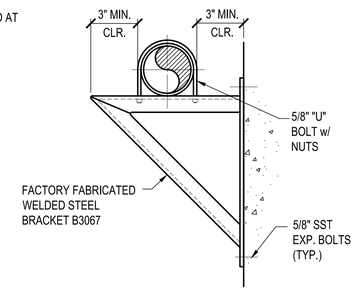

S5

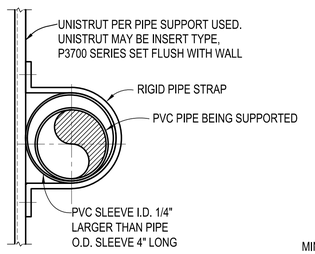

S6

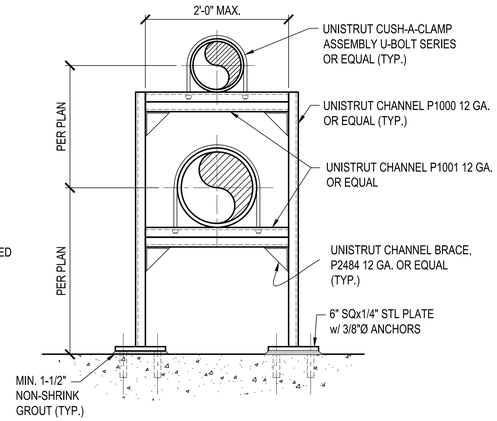

S7

GENERAL NOTES:

1. WHERE NO REFERENCE TO PIPE HANGERS OR SUPPORTS IS GIVEN ON THE DRAWINGS, THE CONTRACTOR SHALL USE THE APPROPRIATE HANGER OR SUPPORT SHOWN ON THIS DRAWING. MAXIMUM HANGER AND SUPPORT SPACING SHALL BE AS SHOWN IN SCHEDULE "A" ON THIS DRAWING. FIGURE NUMBERS ARE B-LINE, UNISTRUT OR GRINNELL.
2. ALL CONCRETE INSERTS, BRACKETS, CHANNELS, BOLTS, RODS, AND MISCELLANEOUS HARDWARE USED FOR PIPE HANGERS OR SUPPORTS SHALL BE 316 S.S., U.N.O.
3. CONCRETE CONTINUOUS INSERTS, B-LINE SERIES B52i, OR EQUAL, SHALL BE PROVIDED IN THE WALLS AND CEILINGS AS REQ'D OR AS NOTED ON THE DRAWINGS. INSERTS IN THE WALLS SHALL BE VERTICAL, UNLESS OTHERWISE NOTED AND SHALL BEGIN 6 INCHES ABOVE THE FLOOR AND END 6 INCHES BELOW THE CEILING. INSERTS IN THE CEILING SHALL BEGIN AND END 3 INCHES FROM WALLS AND BEAMS, WHERE PRACTICABLE. THE CENTERLINES OF WALL AND CEILING INSERTS SHALL ALIGN. MAXIMUM CENTER TO ENTER SPACING OF INSERTS SHALL BE 5'-0".
4. IN AREAS NOT COVERED UNDER NOTE 3, CONCRETE INSERTS SHALL BE B-LINE SERIES B3014N WITH APPROPRIATE NUT, B-LINE SERIES B521i CHANNEL EMBEDDED ANCHOR BOLTS, OR EQUAL. IN WITHOUT THE PRIOR WRITTEN APPROVAL OF THE ENGINEER (FOR EQUIPMENT LIFTING DEVICES, (SEE STRUCTURAL DRAWINGS).
5. SUPPORTS SHALL MEET MANUFACTURERS STANDARDIZATION SOCIETY OF THE VALVE AND FITTINGS INDUSTRY STANDARD PRACTICE SP58, LATEST EDITION.
6. HANGER BRACKET AND SUPPORT COMPONENTS MAY BE INTERCHANGED AS APPROVED BY THE ENGINEER.
7. TRAPEZE AND PIPE RACK COMPONENTS SHALL HAVE A MINIMUM STEEL THICKNESS OF 12 GAUGE. MAXIMUM DEFLECTION SHALL BE LIMITED TO 1/240 OF THE SPAN. CHANNEL COMPONENTS SHALL BE B-LINE SERIES B22 OR B22A, OR EQUAL.
8. CONCRETE INSERTS IN AREAS BELOW WATER SURFACE OR NORMALLY SUBJECT TO SUBMERGING SHALL BE EMBEDDED ANCHOR BOLTS, OR APPROVED EQUAL. IN NO CASE SHALL CONCRETE CONTINUOUS INSERTS BE USED IN THESE AREAS.
9. ALL PIPING, DUCTWORK, ACCESSORIES, APPURTENANCES, ETC. SHALL BE ANCHORED TO RESIST 200% OF THE APPLIED LOAD & A LATERAL SEISMIC FORCE OF 40 PERCENT OF ITS WEIGHT WITHOUT EXCESSIVE DEFLECTION.
10. CONTRACTOR SHALL VERIFY ALL SUPPORT DIMENSIONS AND LOCATIONS WITH APPROVED SHOP DRAWINGS FOR ITEMS BEING SUPPORTED BEFORE FABRICATION OR INSTALLATION OF SUPPORTS.

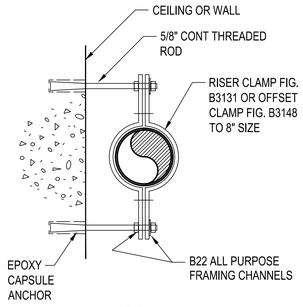

S8

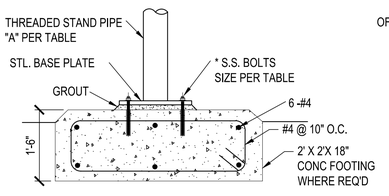

DIMENSIONS				
PIPE Ø SIZE	BOLT SIZE	STAND PIPE "A"	ADJ. PIPE "B"	FLANGE SUPPORT PLATE THK. "C"
4-12	1/2	3"	2 1/2"	1/4"
14-16	5/8	4"	3"	3/8"
18-36	7/8	6"	4"	3/8"

INSTALLATION NOTE:
PIPE SUPPORT SPACING, MATERIAL AND QUANTITY PER SPECS.

* BOLT EMBEDMENT DEPTH PER TABLE HEREON.

S1A

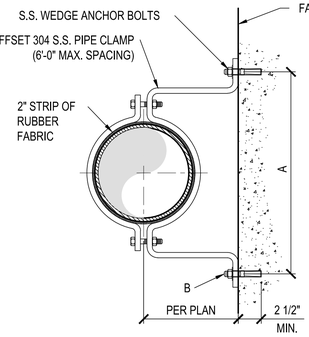

DIMENSIONS			
PIPE SIZE	A	HOLE SIZE B	BOLT SIZE
3	9 1/2	7/16	3/8
4	10 9/16	9/16	1/2
5	11 11/16	9/16	1/2
6	14 3/8	9/16	1/2
8	16 7/16	9/16	1/2
10	21 1/2	13/16	3/4
12	24 7/8	13/16	3/4
18	31	13/16	3/4
24	37	1 11/16	1

S9

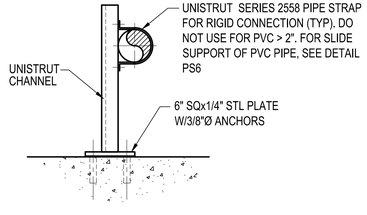

S12

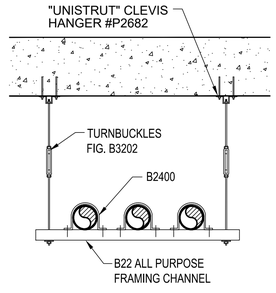

S10

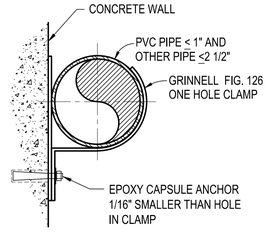

S11

SCHEDULE "A"

PIPE HANGER RODS AND SUPPORT SPACING

PIPE SIZE	ROD SIZE (INCHES)	MAX. SPAN (FT.) STEEL PIPE	COPPER PIPE	PVC PIPE	DUCTILE IRON PIPE	FIBERGLASS
UP TO 1"	3/8	6	5	5	-	-
1 1/4" TO 2"	3/8	10	8	5.5	10	-
2 1/2" TO 3 1/2"	1/2	10	8	6	10	-
4" TO 5"	5/8	10	-	8	10	-
6"	3/4	10	-	9	10	-
8" TO 12"	7/8	10	-	9	10	-
ABOVE 12"	1	10	-	9	10	-

BOLT DIAMETER	VERT BOLT EMBEDMENT LENGTH	HORIZ BOLT EMBEDMENT LENGTH	HEADED STUD FILLET WELD SIZE, "S".
1/2"	6"	4"	1/4"
5/8"	6"	4"	5/16"
3/4"	7"	5"	5/16"
7/8"	8"	6"	5/16"
1"	9"	7"	3/8"
1 1/8"	10"	8"	-----
1 1/4"	11"	9"	-----

TYP. ANCHOR AND EXPANSION BOLT SCHEDULE

NO	BY	DATE	REVISIONS	DATE	APP.

Registered Professional Engineer (Civil) CERTIFICATE NO. 70097 Timothy Pierce Signed ARIZONA, U.S.A. Expires 12/31/28

PREPARED BY: PACE
DESIGNED BY: NE
DRAWN BY: DS, WW
CHECKED BY: TP
SCALE: AS NOTED
DATE: NOV 2025
JOB NO.: B614

THESE DRAWINGS ARE THE PROPERTY OF P.A.C.E. AND SHALL NOT BE REPRODUCED IN ANY MANNER NOR BE USED FOR CONSTRUCTION UNLESS STAMPED "ISSUED FOR CONSTRUCTION".

TITLE: **MECHANICAL DETAILS VI**

100% ISSUED FOR BID

JOB: TOWN OF JEROME WASTEWATER TREATMENT PLANT — YAVAPAI CO. AZ

PREPARED BY: TAYLOR B. PIERCE — R.C.E. 70097 — DATE

PACE
Advanced Water Engineering
8723 E. VIA de VENTURA, BLDG. A, SUITE 220 SCOTTSDALE, CA 85258
P: (480) 991-3595 | www.pacewater.com

SHEET **M8.5**
51 OF 99 SHEETS

JOB NO. B614

PIPE SUPPORT DETAILS — N.T.S. — A

W:\B614\Engineering\B614-30sheet\B614 - M8.0 MECHANICAL DETAILS.dwg - Tab: M8.5 - by neddington on 02/22/26 at 12:41:49 PM

GENERAL STRUCTURAL NOTES

APPLY UNLESS NOTED OTHERWISE

PK ASSOCIATES, LLC
6900 E. Belleview Ave. #200
Greenwood Village, Colorado 80111
Phone: (720) 799-1058
Email: cadd@pkastructural.com
Website: www.pkastructural.com

BUILDING CODE:

2012 EDITION OF THE INTERNATIONAL BUILDING CODE WITH TOWN OF JEROME AMENDMENTS.

LOADS:

ROOF LIVE LOAD = 20 PSF (REDUCIBLE).
TOTAL ROOF DEAD LOAD = 20 PSF.
GROUND SNOWLOAD = 20 PSF.
ROOF SNOW = 18.5 PSF.

WIND:

THE STRUCTURE AND ITS COMPONENTS ARE DESIGNED FOR WIND LOADS AS DEFINED BY THE BUILDING CODE, WHERE:

BASIC WIND SPEED 120 MPH.
RISK CATEGORY: III.
WIND EXPOSURE: C.
VELOCITY PRESSURE, qz = 23.7 PSF AT h = 12' FT. (MEAN ROOF HEIGHT). DESIGN WIND PRESSURES COMPONENTS AND CLADDING:

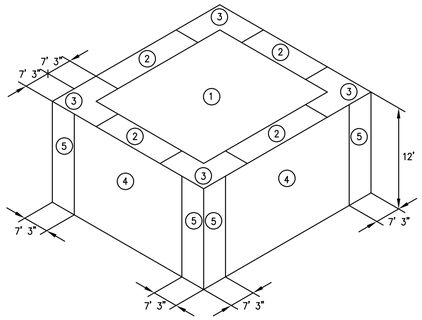

*PRESSURES SHOWN ARE ULTIMATE. MULTIPLY BY 0.6 FOR SERVICE LEVEL PRESSURES.

LOCATION	ZONE	EFFECTIVE WIND AREA (SF)	DESIGN WIND PRESSURE (PSF)*	
ROOF	1	10	+16.0	−54.9
		20	+16.0	−50.9
		50	+16.0	−45.6
		100	+16.0	−41.6
	2	10	+16.0	−74.2
		20	+16.0	−69.1
		50	+16.0	−62.3
		100	+16.0	−57.1
	3	10	+16.0	−103.3
		20	+16.0	−93.0
		50	+16.0	−79.4
		100	+16.0	−69.1
WALLS	4	10	+31.1	−30.4
		20	+29.1	−29.1
		50	+26.3	−27.2
		100	+24.2	−25.8
		500	+19.4	−22.6
	5	10	+31.1	−63.7
		20	+29.1	−58.1
		50	+26.3	−50.8
		100	+24.2	−45.2
		500	+19.4	−32.3
PARAPET	INTERIOR	10	+103.3	−58.1
		50	+88.6	−53.5
		100	+81.4	−50.0
	EXTERIOR	10	+132.4	−87.2
		50	+105.7	−77.0
		100	+93.3	−69.4

ZONE1: INTERIOR AREA OF ROOF AWAY FROM BUILDING EXTERIOR WALLS.
ZONE2: ROOF AREAS WITHIN 7'−3" OF EXTERIOR WALLS.
ZONE3: ROOF AREAS WITHIN 7'−3" OF BUILDING CORNERS.
ZONE4: EXTERIOR WALLS AWAY FROM BUILDING CORNERS.
ZONE5: EXTERIOR WALLS WITHIN 7'−3" OF BUILDING CORNERS.
−DESIGN WIND PRESSURES − PLUS AND MINUS SIGNS SIGNIFY PRESSURE ACTING TOWARD AND AWAY FROM EXTERIOR SURFACE.
−LINEAR INTERPOLATION BETWEEN VALUES OF TRIBUTARY AREA IS PERMISSIBLE.

SEISMIC:

RISK CATEGORY = III.
SEISMIC IMPORTANCE FACTOR: Ie = 1.25.
DESIGN CATEGORY = B.
SITE CLASS C.
SS = 0.31, S1 = 0.097, R = 3.5.
Sds = 0.269, Sd1 = 0.097.
BASIC SEISMIC−FORCE−RESISTING SYSTEM (INTERMEDIATE REINFORCED MASONRY SHEAR WALLS).
ANALYSIS PROCEDURE USED (EQUIVALENT LATERAL FORCE PROCEDURE).
CS = 0.096 (FACTORED).

FOUNDATIONS:

SOIL REPORT BY WESTERN TECHNOLOGIES INC; JOB NO.2522JW197; DATED OCTOBER 25, 2022; SPREAD FOOTINGS SHALL BEAR ON FIRM, UNDISTURBED SOIL AT BELOW GRADE TANKS AND 1' OF 2 SACK SLURRY AT GRADE. IN ACCORDANCE WITH THE ABOVE REPORT, BOTTOM OF FOOTING TO BE 2'0" MINIMUM BELOW FINISHED GRADE. (THESE FOOTING DEPTHS ARE MINIMUMS AND THE CONTRACTOR SHALL COORDINATE WITH SOILS REPORT AND OTHER TRADES TO ENSURE THESE MINIMUMS ARE SUFFICIENT FOR THE WORK.) FINISHED GRADE IS DEFINED AS TOP OF SLAB FOR INTERIOR FOOTINGS AND LOWEST ADJACENT GRADE WITHIN 5 FEET FOR PERIMETER FOOTINGS. DESIGN SOIL BEARING VALUE = 2500 PSF. FOUNDATION EXCAVATIONS SHALL BE INSPECTED BY SOILS ENGINEER PRIOR TO PLACEMENT OF CONCRETE.

CONCRETE:

MINIMUM 28 DAY STRENGTH 5,000 PSI EXCEPT AS FOLLOWS: (TYPE II, U.N.O.)

WALLS ---------- 5,000 PSI
MILD REINFORCED SLAB ---------- 5,000 PSI
FOUNDATIONS ---------- 5,000 PSI

MECHANICALLY VIBRATE ALL CONCRETE WHEN PLACED, EXCEPT THAT SLABS ON GRADE NEED BE VIBRATED ONLY AROUND UNDER−FLOOR DUCTS, ETC. MAXIMUM SLUMP 4 1/2" FOR CONCRETE WITHOUT PLASTICIZER. IF PLASTICIZER IS USED, A HIGHER FINAL SLUMP MAY BE ALLOWED UPON STRUCTURAL ENGINEER'S APPROVAL. CAST CLOSURE POUR AROUND COLUMNS AFTER COLUMN DEAD LOAD IS APPLIED. UNLESS APPROVED OTHERWISE IN WRITING BY THE ARCHITECT, ALL CONCRETE SLABS ON GRADE SHALL BE BOUND BY CONTROL JOINTS (KEYED OR SAW CUT), SUCH THAT THE ENCLOSED AREA DOES NOT EXCEED 225 SQUARE FEET. KEYED CONTROL JOINTS NEED ONLY OCCUR AT EXPOSED EDGES DURING POURING, ALL OTHER JOINTS MAY BE SAW CUT. CONTRACTOR SHALL SUBMIT PROPOSED LOCATIONS FOR APPROVAL PRIOR TO CONSTRUCTION.

REINFORCING:

ASTM A615 (FY = 60 KSI) DEFORMED BARS FOR ALL BARS. ALL GRADE 60 REINFORCING TO BE WELDED SHALL BE ASTM A706. WELDED WIRE FABRIC PER ASTM A185, WIRE PER ASTM A82. NO TACK WELDING OF REINFORCING BARS ALLOWED WITHOUT PRIOR REVIEW OF PROCEDURE WITH THE STRUCTURAL ENGINEER. LATEST ACI CODE AND DETAILING MANUAL APPLY. CLEAR CONCRETE COVERAGES AS FOLLOWS UNLESS NOTED OTHERWISE IN THE CONCRETE FIRE RATING TABLE:

CAST AGAINST AND PERMANENTLY EXPOSED TO EARTH ---------- 3"
EXPOSED TO EARTH OR WEATHER
#6 OR LARGER ---------- 2"
#5 AND SMALLER ---------- 1 1/2"
FLAT SLAB ---------- 3/4"
ALL OTHER PER LATEST EDITION OF ACI 318.

LAP SPLICES IN CONCRETE:

LAP SPLICES, UNLESS NOTED OTHERWISE, SHALL BE CLASS "B" TENSION LAP SPLICES PER LATEST EDITION OF ACI 318. LAP SPLICES IN CONCRETE COLUMNS SHALL BE TENSION LAP SPLICES. STAGGER SPLICES A MINIMUM OF ONE LAP LENGTH. LAPS IN WELDED WIRE FABRIC SHALL BE MADE SO THAT THE OVERLAP, MEASURED BETWEEN OUTERMOST CROSS WIRES OF EACH FABRIC SHEET, IS NOT LESS THAN THE SPACING OF CROSS WIRES PLUS 2 INCHES. ALL WELDED WIRE FABRIC SHALL BE CHAIRED TO ENSURE PROPER CLEARANCES.

ALL SPLICE LOCATIONS SUBJECT TO APPROVAL BY THE STRUCTURAL ENGINEER. PROVIDE BENT CORNER BARS TO MATCH AND LAP WITH HORIZONTAL BARS AT ALL CORNERS AND INTERSECTIONS PER TYPICAL DETAILS. REINFORCING BAR SPACING GIVEN ARE MAXIMUM ON CENTERS. ALL BARS PER CRSI SPECIFICATIONS AND HANDBOOK. DOWEL ALL VERTICAL REINFORCING TO FOUNDATION WITH STANDARD 90−DEGREE HOOKS UNLESS NOTED OTHERWISE. SECURELY TIE ALL BARS IN LOCATION BEFORE PLACING CONCRETE.

MASONRY:

MECHANICALLY VIBRATE GROUT IN VERTICAL SPACES IMMEDIATELY AFTER POURING AND AGAIN ABOUT 5 MINUTES LATER. PROVIDE CLEANOUTS IF GROUT LIFT EXCEEDS 4'−0" IN BLOCK WALLS. MAXIMUM GROUT LIFT SHALL BE 8'−0". UNLESS NOTED OTHERWISE ON THE PLANS, PLACE CONTROL JOINTS IN MASONRY WALLS SUCH THAT NO STRAIGHT RUN OF WALL EXCEEDS 24'−0". CONTROL JOINTS SHALL NOT OCCUR WITHIN 8'−0" OF WALL CORNERS, INTERSECTIONS, ENDS, WITHIN 24" OF CONCENTRATED POINTS OF BEARING OR JAMBS, OR OVER OPENINGS UNLESS SPECIFICALLY SHOWN ON THE STRUCTURAL DRAWINGS. ALL MASONRY BELOW FINISHED FLOOR OR GRADE SHALL BE GROUTED SOLID. LAP SPLICES SHALL BE AS FOLLOWS:

BAR SIZE	#3	#4	#5	#6	#7	#8	#9
BAR LAPS (INCHES)	27	36	45	54	63	72	81

HOLLOW CONCRETE MASONRY UNITS SHALL CONFORM TO ASTM C90, NORMAL WEIGHT, RUNNING BOND, MORTAR TYPE S (1800 PSI), COMPRESSIVE STRENGTHS AS FOLLOWS:

F'M(PSI)	UNIT STRENGTH, NET (PSI)	GROUT (PSI)	LOCATION
2000	2000	2000	TYPICAL U.N.O.

VERTICAL REINFORCING:

1 #5 IN CENTER OF GROUT AT CENTER OF WALL, CONTINUOUS FULL HEIGHT OF WALL AT ALL CORNERS, INTERSECTIONS, WALL ENDS, BEAM BEARINGS, JAMBS, EACH SIDE OF CONTROL JOINTS AND AT INTERVALS NOT TO EXCEED 48" O.C. UNLESS NOTED OTHERWISE. TIE AT 8'−0" VERTICALLY, WITH SINGLE WIRE LOOP TIE BY A.A. WIRE PRODUCTS COMPANY. LAP SPLICES SHALL BE AS PER SCHEDULE UNDER "MASONRY" SECTION. DOWEL ALL VERTICAL REINFORCING TO FOUNDATION WITH DOWELS TO MATCH VERTICAL REINFORCING.

HORIZONTAL REINFORCING:

2 #5 IN MINIMUM 8" DEEP GROUTED CONTINUOUS BOND BEAM AT (ELEVATED FLOORS AND) ROOFLINE. 1 #5 IN MINIMUM 8" DEEP GROUTED CONTINUOUS BOND BEAM AT TOP OF PARAPET OR TOP OF A FREESTANDING WALL AND AT BOTTOM OF WALL. USE 1 #4 HORIZONTAL BOND BEAM AT 48" O.C. VERTICALLY SPACED FOR ALL WALLS WITHOUT RUNNING BOND (STACKED BOND). PLACE THESE BARS CONTINUOUS THRU CONTROL JOINTS PER TYPICAL DETAIL. PROVIDE BENT BARS PER TYPICAL DETAILS, TO MATCH HORIZONTAL BOND BEAM REINFORCING, AT CORNERS AND WALL INTERSECTION TO MAINTAIN BOND BEAM CONTINUITY. LAP SPLICES SHALL BE AS PER SCHEDULE UNDER "MASONRY" SECTION. DO NOT SPLICE WITHIN 8'−0" OF CONTROL JOINTS. USE STANDARD WEIGHT (NO. 9 GAGE WIRE) DUR−O−WAL OR DUR−O−WIRE (OR EQUIVALENT) LADDER TYPE JOINT REINFORCEMENT AT 16" O.C. IN MASONRY WALLS.

ANCHOR BOLTS:

ALL ANCHOR BOLTS SHALL BE ASTM F1554 GRADE 36 (WELDABLE), U.N.O., WHEN SPECIFIED ON PLAN, ALL ASTM F1554 GRADE ANCHOR BOLTS SHALL BE 511 (WELDABLE) ANCHOR BOLTS.

MAY BE BENT IN FIELD PER AISC REQUIREMENTS TO FIX DAMAGED ANCHOR BOLTS; FIELD BENT IS LIMITED TO 45° OR LESS. ANCHOR BOLTS CAN HAVE HEADED OR HOOKED BOLTS SHAPES. USE HEADED ANCHOR BOLTS WHERE ANCHOR BOLT SHAPE IS NOT SPECIFIED. ANCHOR BOLTS SHALL BE INSPECTED PER SPECIAL INSPECTION TABLE REQUIREMENTS.

STRUCTURAL STEEL:

STEEL SETIONS − MINIMUM GRADE AND STRENGTH

STEEL WIDE FLANGES	= ASTM A992 (50KSI)
STEEL CHANNELS	= ASTM A36 (36KSI)
STEEL ANGLES	= ASTM A36 (36KSI)
STEEL COLUMN BASE PLATES	= ASTM A992 (50KSI)
STEEL PLATES AT MOMENT FRAME AND BRACED FRAME CONNECTIONS	= ASTM A992 (50KSI)
STEEL PLATES (MISCELLLANEOUS)	= ASTM A36 (36KSI)
STEEL HSS (RECTANGLE)	= ASTM A500 (46KSI)
STEEL HSS (ROUND)	= ASTM A500 (42KSI)
STEEL PIPES	= ASTM A501 (36KSI) − OR − ASTM A53 (35KSI), TYPE E OR S

NOTE: ALL 36KSI STEEL MAY BE SUBSTITUTED WITH 50KSI STEEL UNLESS NOTED OTHERWISE.

ALL CONSTRUCTION PER LATEST AISC HANDBOOK. ALL REFERENCE TO HEADED STUDS SHALL BE HIGH STRENGTH HEADED STUDS. ATTACHMENT OF HEADED STUDS SHALL CONFORM TO ALL REQUIREMENTS OF THE LATEST EDITION OF THE "RECOMMENDED PRACTICES FOR STUD WELDING" AND THE "STRUCTURAL WELDING CODE" PUBLISHED BY AWS. ALL BOLTS, ANCHOR BOLTS, EXPANSION BOLTS, ETC. SHALL BE INSTALLED WITH STEEL WASHERS AT SLOTTED HOLES IN STEEL SECTIONS. ALL WELDING SHALL BE PERFORMED BY WELDERS HOLDING VALID CERTIFICATES AND HAVING CURRENT EXPERIENCE IN THE TYPE OF WELD SHOWN ON THE DRAWINGS OR NOTES. CERTIFICATES SHALL BE THOSE ISSUED BY AN ACCEPTED TESTING AGENCY. ALL WELDING DONE BY E70 SERIES LOW HYDROGEN RODS UNLESS NOTED OTHERWISE. FOR GRADE 60 REINFORCING BARS, USE E90 SERIES. ALL WELDING PER LATEST AMERICAN WELDING SOCIETY STANDARDS, (EXCEPT STEEL JOISTS AND JOIST GIRDERS SHALL COMPLY WITH SJI STANDARDS). THESE DRAWINGS DO NOT DISTINGUISH BETWEEN SHOP AND FIELD WELDS; THE CONTRACTOR MAY SHOP WELD OR FIELD WELD AT HIS DISCRETION. SHOP WELDS AND FIELD WELDS SHALL BE SHOWN ON THE SHOP DRAWINGS SUBMITTED FOR REVIEW. ALL FULL (COMPLETE) PENETRATION WELDS SHALL BE TESTED AND CERTIFIED BY AN INDEPENDENT TESTING LABORATORY. WHEN STRUCTURAL STEEL IS FURNISHED TO A SPECIFIED MINIMUM YIELD POINT GREATER THAN 36 KSI, THE ASTM OR OTHER SPECIFICATION DESIGNATION SHALL BE INCLUDED NEAR THE ERECTION MARK ON EACH SHIPPING ASSEMBLY OR IMPORTANT CONSTRUCTION COMPONENT, OVER ANY SHOP COAT OF PAINT, PRIOR TO SHIPMENT FROM THE FABRICATOR'S PLANT. STRUCTURAL STEEL COMPONENTS, AND FASTENERS AT ALL EXTERIOR CONDITIONS SHALL BE GALVANIZED OR PROTECTED AGAINST CORROSION USING APPROVED METHOD PUBLISHED BY AISC OR ANSI. WELDS ON GALVANIZED STEEL SHALL FOLLOW AWS D−19.0 SPECIFICATIONS.

STRUCTURAL BOLTS:

ALL STRUCTURAL BOLTS SHALL BE ASTM F3125 GRADE A325 TYPE 1 AND SHALL BE INSTALLED AS BEARING−TYPE CONNECTIONS WITH THREADS INCLUDED IN SHEAR PLANE (I.E. A TYPE "N" CONNECTION) UNLESS NOTED OTHERWISE. USE A325 TYPE 3 BOLTS AT ALL CONNECTIONS EXPOSED TO WEATHERING. USE SC (SLIP CRITICAL) AT ALL MOMENT FRAMES AND BRACED FRAMES. USE ASTM A354 BOLTS WHERE THE BOLT LENGTH REQUIRED FOR THE CONNECTION EXCEEDS THE MINIMUM LENGTH OF AN A325 BOLT. BOLTS MAY BE TIGHTENED USING ANY AISC APPROVED METHOD. ALL STRUCTURAL BOLTING SHALL BE INSPECTED BY AN INDEPENDENT TESTING LABORATORY TO ENSURE BOLT TENSION.

STEEL GRATING:

UNLESS NOTED OTHERWISE IN ARCHITECTURAL SPECIFICATIONS, USE PAINTED (GALVANIZED) STEEL GRATING WITH 2 1/2" X 3/16" BEARING BARS AT 1 3/16" O.C. AND CROSSBARS AT 4" O.C. GRATING SHALL BE ERECTED AND ATTACHED PER MANUFACTURER'S RECOMMENDATIONS.

ROOF DECK:

DECK SHALL BE 1 1/2" DEEP, 36" WIDE, 20 GAGE GALVANIZED STEEL, WITH MINIMUM YIELD STRESS OF 50 KSI, WITH MINIMUM S = 0.237 IN3 AND I = 0.231 IN4 PER FOOT OF WIDTH. DECK SHALL BE ERECTED IN ACCORDANCE WITH MANUFACTURER'S RECOMMENDATIONS AS 1 SPAN MINIMUM AND SHALL BE ATTACHED FOR A MINIMUM DIAPHRAGM SHEAR CAPACITY OF 650 PLF USING THE FOLLOWING MINIMUM ATTACHMENTS:

WELD DECK TO SUPPORTING MEMBERS WITH 4 − 5/8" DIAMETER OR 3/8" X 1" PUDDLE WELDS PER SHEET AT ENDS, END LAPS AND AT INTERMEDIATE SUPPORTS, AND AT 24" O.C. AT PERIMETER BEAMS AND OPENING EDGES RUNNING PARALLEL TO THE DECK. SIDE SEAM ATTACHMENT SHALL BE VSC2 AT 24" O.C.

CONSTRUCTION JOINTS:

ALL CONSTRUCTION JOINTS IN WALLS SHALL BE KEYED IN ACCORDANCE WITH THE TYPICAL CONSTRUCTION JOINT DETAILS SHOWN ON THE STRUCTURAL DRAWINGS OR, AT THE CONTRACTOR'S OPTION, SHALL BE INTENTIONALLY ROUGHENED IN ACCORDANCE WITH THE FOLLOWING: THE SURFACE OF ROUGHENED JOINTS SHALL BE SAND BLASTED OR ROUGHENED WITH A CHIPPING HAMMER TO EXPOSE THE AGGREGATE EMBEDDED IN THE PREVIOUS POUR. THE EXPOSED AGGREGATE SHALL PROTRUDE A MINIMUM OF 1/4 INCH. ALL SURFACES OF CONSTRUCTION JOINTS SHALL BE CLEANED AND LAITANCE REMOVED. IMMEDIATELY BEFORE NEW CONCRETE IS PLACED, ALL CONSTRUCTION JOINTS SHALL BE WETTED AND STANDING WATER REMOVED. VERTICAL CONSTRUCTION JOINTS IN WALLS SHALL BE HELD TO A MAXIMUM SPACING OF 60'−0". ALL CONSTRUCTION JOINTS IN SLABS, JOISTS, BEAMS, AND GIRDERS SHALL BE OFFSET A DISTANCE EQUAL TO TWICE THE WIDTH OF THE BEAM.

ACCORDANCE WITH THE TYPICAL SLAB ON DECK CONSTRUCTION JOINT DETAIL SHOWN ON THE STRUCTURAL DRAWINGS. BEAMS AND GIRDERS HAVE BEEN DESIGNED ASSUMING THE CONSTRUCTION JOINTS TO BE LOCATED IN THE MIDDLE THIRD OF THE BEAM, GIRDER, OR SLAB SPAN. ALL CONSTRUCTION, CONTROL, AND ISOLATION JOINTS FOR SLABS ON GRADE SHALL BE IN ACCORDANCE WITH THE TYPICAL SLAB ON GRADE DETAILS. THE CONTRACTOR SHALL SUBMIT THE PROPOSED LOCATIONS OF CONSTRUCTION JOINTS TO THE ENGINEER FOR ACCEPTANCE BEFORE STARTING CONSTRUCTION.

ELECTRICAL CONDUIT IN CONCRETE SLABS:

ELECTRICAL CONDUIT SHALL BE RIGID STEEL CONDUIT OR FLEXIBLE PLASTIC CONDUIT. ALUMINUM CONDUIT IS PROHIBITED. CONDUIT WITH A MAXIMUM OUTSIDE DIAMETER OF 1/6 TIMES THE SLAB THICKNESS MAY BE EMBEDDED IN ONE LAYER AT THE MID−DEPTH OF SLABS. MINIMUM CLEAR DISTANCE BETWEEN CONDUITS SHALL BE 3 TIMES CONDUIT DIAMETER. CONDUIT SHALL BE FIRMLY CHAIRED AND TIED TO PREVENT DISPLACEMENT DURING POURING. PLACE #3 AT 12 INCHES O.C. ADDITIONAL REINFORCING ABOVE AND BELOW, PERPENDICULAR TO THE CONDUIT. THE ADDED REINFORCING SHALL EXTEND 1'−0" PAST THE CONDUIT ON BOTH SIDES. FOR CONDUIT PLACED IN SLABS ON METAL DECKING, CONDUIT SHALL RUN IN THE METAL DECK FLUTES PER THE TYPICAL CONDUIT IN SLAB ON METAL DECK DETAIL.

CONCRETE INSERTS:

THIN SLAB TYPE INSERTS SHALL BE GALVANIZED AND HAVE THE FOLLOWING MINIMUM WORKING LOADS(A 4:1 RATIO OF ULTIMATE TO WORKING VALUES IS ASSUMED):

BOLT DIAMETER	WORKING LOAD SHEAR	TENSION
1/2"	1,000 LBS.	650 LBS.
5/8"	1,250 LBS.	700 LBS.
3/4"	1,600 LBS.	850 LBS.

COIL LOOP INSERTS SHALL BE GALVANIZED AND HAVE THE FOLLOWING MINIMUM WORKING LOADS(A 3:1 RATIO OF ULTIMATE TO WORKING VALUES IS ASSUMED):

BOLT DIAMETER	WORKING LOAD SHEAR	TENSION
1/2"	2,200 LBS.	2,820 LBS.
5/8"	3,000 LBS.	3,620 LBS.
3/4"	3,100 LBS.	3,660 LBS.

THREADED COIL RODS, COIL NUTS, ETC., USED IN CONJUNCTION WITH CONCRETE INSERTS, SHALL HAVE A WORKING LOAD EQUAL TO OR GREATER THAN THE CORRESPONDING CONCRETE INSERT. CONTRACTOR SHALL SUBMIT MANUFACTURER'S SIZE AND STRENGTH DATA PRIOR TO CONSTRUCTION TO THE STRUCTURAL ENGINEER THRU THE ARCHITECT. VALUES LISTED ABOVE ARE FOR RICHMOND STRUCTURAL CONNECTION INSERTS.

EXPANSION AND SCREW ANCHORS:

USE STUD TYPE EXPANSION ANCHOR WITH A SINGLE PIECE WEDGE ONLY WHERE NOTED ON PLANS. IF USE IS REQUESTED FOR OTHER THAN WHERE NOTED CONTACT STRUCTURAL ENGINEER THROUGH ARCHITECT FOR APPROVAL.

CONTRACTOR SHALL SUBMIT MANUFACTURER'S SIZE AND STRENGTH DATA TO ENGINEER THROUGH ARCHITECT PRIOR TO CONSTRUCTION. INSTALL ALL BOLTS AS OUTLINED IN MANUFACTURER'S SPECIFICATIONS, UTILIZING PROPER SIZE AND TYPE OF DRILL, CLEANING HOLE, DRIVING AND TIGHTENING BOLT.

IN CONCRETE:

ANCHORS USED MUST HAVE ICC APPROVAL AND INCLUDE HILTI KWIK BOLT TZ2 (ESR−4266), AND SIMPSON STRONG BOLT−2 (ESR−3037), AND DEWALT POWER−STUD+SD2 (ESR−2502), AND SIMPSON TITEN HD (ESR−2713), HILTI KWIK HUS−EZ (ESR−3027), AND DEWALT SCREW−BOLT+ (ESR−3889) OR APPROVED EQUAL.

IN MASONRY:

ANCHORS USED MUST HAVE ICC APPROVAL AND INCLUDE HILTI KWIK BOLT 3 (ESR−1385), AND SIMPSON STRONG BOLT−2 (ES−240), DEWALT POWER−STUD+SD1 (ESR−2966), HILTI KWIK HUS−EZ (ESR−3056) AND SIMPSON TITEN HD (ESR−1056), AND DEWALT SCREW−BOLT+ (ESR−4042) OR APPROVED EQUAL.

EPOXY ANCHORS IN CONCRETE AND MASONRY:

INJECTABLE ADHESIVE SHALL BE USED FOR INSTALLATION OF REINFORCING STEEL DOWELS OR THREADED ANCHOR RODS AND INSERTS INTO NEW OR EXISTING CONCRETE OR SOLID GROUTED CONCRETE MASONRY UNITS ONLY WHERE SPECIFIED ON PLANS. IF USE IS REQUESTED FOR OTHER THAN WHERE NOTED CONTACT STRUCTURAL ENGINEER THROUGH ARCHITECT FOR APPROVAL. ADHESIVE SHALL BE FURNISHED IN SIDE BY SIDE PACKS WHICH KEEP COMPONENT A AND COMPONENT B SEPARATE. USE ONLY INJECTION TOOLS AND STATIC MIXING NOZZLES RECOMMENDED BY MANUFACTURER. MANUFACTURER'S INSTRUCTIONS SHALL BE FOLLOWED.

IN CONCRETE:

ANCHORS USED MUST HAVE I.C.C. APPROVAL IN CRACKED CONCRETE AND INCLUDE SIMPSON SET−XP (ESR−2508), HILTI HIT−RE500−V3 (ESR−3814), DEWALT PURE110+ (ESR−3298) OR APPROVED EQUIVALENT. THE USE OF ANY EPOXY ANCHOR MUST BE APPROVED BY THE ENGINEER OF RECORD PRIOR TO INSTALLATION.

IN MASONRY:

ANCHORS USED MUST HAVE ICC APPROVAL AND INCLUDE SIMPSON SET (ESR−1772) AND HILTI HIT−HY 270 MAX (ESR−4143) AND DEWALT AC100+GOLD (ESR−3200) OR APPROVED EQUIVALENT. THE USE OF ANY EPOXY ANCHOR MUST BE APPROVED BY THE ENGINEER OR RECORD PRIOR TO INSTALLATION.

1. ADHESIVE ANCHORS INSTALLED IN HORIZONTAL TO VERTICALLY OVERHEAD ORIENTATION TO SUPPORT SUSTAINED TENSION LOADS SHALL BE DONE BY A CERTIFIED ADHESIVE ANCHOR INSTALLER (AAI) AS CERTIFIED THROUGH ACI (ACI 318−11 D.9.2.2) / (ACI 318−14 17.8.2.2) / (ACI 318−19 17.2.3) PROOF OF CURRENT CERTIFICATION SHALL BE SUBMITTED TO THE ENGINEER FOR APPROVAL PRIOR TO COMMENCEMENT OF INSTALLATION.
2. ADHESIVE ANCHORS MUST BE INSTALLED IN CONCRETE AGED A MINIMUM OF 21 DAYS (ACI 318−11 D.2.2) / (ACI 318−14 17.1.2) / (ACI 318−19 17.2.2).
3. THE REMOVAL AND RESETTING OF POST INSTALLED ANCHORS IS PROHIBITED (ACI 318−19 17.3.1).
4. PROVIDE SPECIAL INSPECTION FOR ALL MECHANICAL AND ADHESIVE ANCHORS PER THE APPLICABLE BUILDING CODE AND PER THE CURRENT ICC−ES REPORT (IBC 2012, 2015, 2018 TABLE 1705.3 TYPE 4, NOTE B).

STRUCTURAL FILL:

ALL FILL PLACED TO SUPPORT SLABS ON GRADE, BEHIND PERMANENT WALLS, AND AROUND ALL DRAINS SHALL CONSIST OF WELL GRADED, GRANULAR MATERIAL PER THE SPECIFICATIONS. SOILS FOR STRUCTURAL FILL SHALL BE APPROVED BY THE GEOTECHNICAL ENGINEER. STRUCTURAL FILL SHALL BE PLACED ON SOUND NATIVE MATERIAL. PROOF−ROLL CUT AREAS WHICH PROVIDE SUPPORT FOR PERMANENT STRUCTURES. AREAS WHICH ARE EXCESSIVELY YIELDING, AS DETERMINED BY THE CONTINUOUS OBSERVATION OF THE GEOTECHNICAL ENGINEER, SHALL BE OVEREXCAVATED AND REPLACED WITH STRUCTURAL FILL. STRUCTURAL FILL SHALL BE PLACED PER THE SPECIFICATION. USE LEAN CONCRETE FILL BELOW ALL PIPES EXISTING OUT OF BASEMENT WALL, FULL HEIGHT OF WALL. CONCRETE SHALL CONTAIN 2 SACKS OF CEMENT PER YARD.

LATERAL PRESSURE ON SUBGRADE WALLS:

THE DESIGN PRESSURES FOR SUBGRADE WALLS ARE BASED ON A "DRAINED" CONDITION. SEE CIVIL AND MECHANICAL DRAWINGS FOR SUBGRADE DRAINAGE SYSTEM. SEE GEOTECHNICAL REPORT FOR COMPACTION REQUIREMENTS AT SUBGRADE WALLS. SUBGRADE WALLS AND SUPPORTING SLABS SHALL HAVE ATTAINED THEIR FULL CONCRETE STRENGTH BEFORE PLACING ANY BACKFILL U.N.O. THE CONTRACTOR SHALL PROVIDE TEMPORARY BRACES FOR WALLS IF BACKFILL IS PLACED BEFORE WALLS AND SLABS ACHIEVE FULL CONCRETE STRENGTH.

NOTES ON CRACKING OF CONCRETE STRUCTURES:

CRACKING IS INHERENT TO THE MATERIAL PROPERTIES OF CONCRETE CONSTRUCTION (INCLUDING POST−TENSIONED CONCRETE STRUCTURES). WHILE EVERY EFFORT HAS BEEN MADE TO MINIMIZE THE EFFECTS OF UNSIGHTLY CRACKING, THE PRESENCE OF CRACKS ARE NORMAL AND UNAVOIDABLE. THE DESIGN OF THE CONCRETE STRUCTURAL ITEMS HAVE BEEN ANALYZED USING A "CRACKING SECTION." THE PRESENCE OF THE CRACKING SHOULD NOT BE CONSIDERED DETRIMENTAL TO THE STRUCTURE. CRACKS LARGER THAN 10 MILS SHALL BE FILLED AND SEALED WITH AN APPROVED CRACK FILLER TO PREVENT FUTURE DETERIORATION. ALLOWANCE SHALL BE MADE IN THE CONSTRUCTION BUDGET FOR SEALING OF SUCH CRACKS. IN SOME CASE, CRACKS DO NOT APPEAR UNTIL WELL AFTER CONSTRUCTION HAS BEEN COMPLETED. IT IS THE RESPONSIBILITY OF THE OWNER TO MAINTAIN THE STRUCTURE PROPERLY OVER THE LIFE OF THE STRUCTURE. CONCRETE CRACKS, SHOULD THEY OCCUR, SHALL BE FILLED AND SEALED TO PREVENT PREMATURE DETERIORATION OF THE STRUCTURE.

STRUCTURAL SHEET INDEX

SHEET	DESCRIPTION
S1.1	GENERAL STRUCTURAL NOTES
S1.2	GENERAL STRUCTURAL NOTES
S1.3	TYPICAL DETAILS
S1.4	TYPICAL DETAILS
S1.5	TYPICAL DETAILS
S1.6	TYPICAL DETAILS
S1.7	TYPICAL DETAILS
S2.00	FOUNDATION PLAN
S2.01	FRAMING PLAN
S2.10	FRAMING PLAN
S3.1	FOUNDATION DETAILS
S3.2	FOUNDATION DETAILS
S3.3	FRAMING DETAILS
S4.1	FRAMING DETAILS
S4.2	FRAMING DETAILS

NO	BY	DATE	REVISIONS	DATE	APP.
1					
2					
3					
4					
5					
6					

Registered Professional Engineer — CERTIFICATE NO. 70374 — JAMES APPLEYARD — Date Signed 10/31/25 — ARIZONA, U.S.A.

THESE DRAWINGS ARE THE PROPERTY OF P.A.C.E. AND SHALL NOT BE REPRODUCED IN ANY MANNER NOR BE USED FOR CONSTRUCTION UNLESS STAMPED "ISSUED FOR CONSTRUCTION".

PREPARED BY: PKA
DESIGNED BY: JA
DRAWN BY: NS
CHECKED BY: JA
SCALE: AS NOTED
DATE: SEP 2025
JOB NO.: 23364

TITLE: GENERAL STRUCTURAL NOTES

JOB: TOWN OF JEROME WASTEWATER TREATMENT PLANT — YAVAPAI AZ

ISSUED FOR BID

PREPARED BY: TAYLOR B. PIERCE — R.C.E 70097 — DATE

PACE
Advanced Water Engineering
8723 E. Via de Ventura, Suite J | Scottsdale, CA 85258
P: (480) 991-3995 | www.paceadvisor.com

SHEET S1.1
52 OF 99 SHEETS

JOB NO. 23364

GENERAL STRUCTURAL NOTES

APPLY UNLESS NOTED OTHERWISE

PK ASSOCIATES, LLC
6900 E. Belleview Ave. #200
Greenwood Village, Colorado 80111
Phone: (720) 799-1058
Email: cadd@pkastructural.com
Website: www.pkastructural.com

SHOP DRAWINGS:

SHOP DRAWINGS SHALL BE SUBMITTED FOR ALL STRUCTURAL ITEMS IN ADDITION TO ITEMS REQUIRED BY ARCHITECTURAL SPECIFICATIONS.

THE CONTRACTOR SHALL REVIEW ALL SHOP DRAWINGS PRIOR TO SUBMITTAL. ITEMS NOT IN ACCORDANCE WITH CONTRACT DOCUMENTS SHALL BE FLAGGED UPON HIS REVIEW.

VERIFY ALL DIMENSIONS WITH ARCHITECTURAL DRAWINGS AND ALL FINISHED GRADE WITH CIVIL DRAWINGS.

ANY CHANGES, SUBSTITUTIONS, OR DEVIATIONS FROM CONTRACT DOCUMENTS SHALL BE CLOUDED BY MANUFACTURER OR FABRICATOR. ANY OF THE AFOREMENTIONED WHICH ARE NOT CLOUDED OR FLAGGED BY SUBMITTING PARTIES, SHALL NOT BE CONSIDERED APPROVED AFTER ENGINEER'S REVIEW, UNLESS NOTED ACCORDINGLY.

THE ENGINEER HAS THE RIGHT TO APPROVE OR DISAPPROVE ANY CHANGES TO CONTRACT DOCUMENTS AT ANYTIME BEFORE OR AFTER SHOP DRAWING REVIEW.

THE SHOP DRAWINGS DO NOT REPLACE THE CONTRACT DOCUMENTS. ITEMS OMITTED OR SHOWN INCORRECTLY AND ARE NOT FLAGGED BY THE STRUCTURAL ENGINEER OR ARCHITECT ARE NOT TO BE CONSIDERED CHANGES TO CONTRACT DOCUMENTS. IT IS THE CONTRACTOR'S RESPONSIBILITY TO MAKE SURE ITEMS ARE CONSTRUCTED PER THE CONTRACT DOCUMENTS.

THE ADEQUACY OF ENGINEERING DESIGNS AND LAYOUT PERFORMED BY OTHERS RESTS WITH THE DESIGNING OR SUBMITTING AUTHORITY.

REVIEWING IS INTENDED ONLY AS AN AID TO THE CONTRACTOR IN OBTAINING CORRECT SHOP DRAWINGS. RESPONSIBILITY FOR CORRECTNESS SHALL REST WITH THE CONTRACTOR.

GENERAL:

ENTIRE CONTRACT DOCUMENTS SHALL BE USED TO CONSTRUCT BUILDING. SOME CRITICAL ITEMS REQUIRED BY OTHER DISCIPLINES MAY NOT BE SHOWN ON STRUCTURAL DRAWING (I.E. WALL, FLOOR AND ROOF OPENINGS, ARCHITECTURAL, MECHANICAL AND PLUMBING LOADS, SUPPORT PLATES ETC.)

ITEMS SHOWN BY OTHER DISCIPLINES WITH REFERENCE TO STRUCTURAL DRAWING BUT NOT SHOWN ON THESE STRUCTURAL DOCUMENTS SHALL BE CONSIDERED DESIGN BUILD ITEMS. CONTRACTOR SHALL SUBMIT DESIGN BY OTHERS FOR REVIEW.

THE STRUCTURAL CONSTRUCTION DOCUMENTS REPRESENT THE FINISHED STRUCTURE. THEY DO NOT INDICATE THE METHOD OF CONSTRUCTION. THE CONTRACTOR SHALL PROVIDE ALL MEASURES NECESSARY TO PROTECT THE STRUCTURE DURING CONSTRUCTION. SUCH MEASURES SHALL INCLUDE, BUT NOT BE LIMITED TO, BRACING, SHORING FOR LOADS DUE TO CONSTRUCTION EQUIPMENT, ETC. THE STRUCTURAL ENGINEER SHALL NOT BE RESPONSIBLE FOR THE CONTRACTOR'S MEANS, METHODS, TECHNIQUES, SEQUENCES FOR PROCEDURE OF CONSTRUCTION, OR THE SAFETY PRECAUTIONS AND THE PROGRAMS INCIDENT THERETO (NOR SHALL OBSERVATION VISITS TO THE SITE INCLUDE INSPECTION OF THESE ITEMS).

CONSTRUCTION MATERIALS SHALL BE SPREAD OUT IF PLACED ON FRAMED CONSTRUCTION. LOAD SHALL NOT EXCEED THE DESIGN LIVE LOAD PER SQUARE FOOT.

WHERE REFERENCE IS MADE TO VARIOUS TEST STANDARDS FOR MATERIALS, SUCH STANDARDS SHALL BE THE LATEST EDITION AND/OR ADDENDA.

ESTABLISH AND VERIFY ALL OPENINGS AND INSERTS FOR ARCHITECTURAL, MECHANICAL, PLUMBING AND ELECTRICAL WITH APPROPRIATE TRADES, DRAWINGS AND SUBCONTRACTORS PRIOR TO CONSTRUCTION.

OPTIONS ARE FOR CONTRACTOR'S CONVENIENCE. IF THE CONTRACTOR CHOOSES AN OPTION, THE CONTRACTOR SHALL BE RESPONSIBLE FOR ALL NECESSARY CHANGES AND SHALL COORDINATE ALL DETAILS.

NOTES AND DETAILS ON DRAWINGS SHALL TAKE PRECEDENCE OVER GENERAL STRUCTURAL NOTES AND TYPICAL DETAILS. WHERE NO DETAILS ARE SHOWN, CONSTRUCTION SHALL CONFORM TO SIMILAR WORK ON THE PROJECT.

ALL DIMENSIONS SHOWN (INCLUDING ELEVATIONS) ON STRUCTURAL DRAWINGS ARE TO ASSIST CONTRACTOR IN VERIFICATION. SCALING DIMENSIONS FROM DRAWINGS IS NOT PERMITTED. LOCATION OF ALL ITEMS SHALL BE DETERMINED BY DIMENSIONS OR NOTES ONLY; DO NOT USE GRAPHIC APPEARANCE TO ASSUME SPECIFIC LOCATIONS.

CONTRACTOR SHALL BE RESPONSIBLE FOR VERIFICATION OF ALL DIMENSIONS WITH ARCHITECTURAL AND FINISHED GRADE WITH CIVIL DRAWINGS PRIOR TO START OF CONSTRUCTION. RESOLVE ANY DISCREPANCY WITH THE ARCHITECT.

TYPICAL DETAILS MAY NOT NECESSARILY BE CUT ON PLANS, BUT APPLY UNLESS NOTED OTHERWISE.

WHERE DISCREPANCIES OCCUR BETWEEN PLANS, DETAILS, GENERAL STRUCTURAL NOTES AND SPECIFICATIONS, THE GREATER REQUIREMENTS SHALL GOVERN.

ANY ENGINEERING DESIGN, PROVIDED BY OTHERS AND SUBMITTED FOR REVIEW, SHALL BEAR THE SEAL OF AN ENGINEER REGISTERED IN THE STATE OF JURISDICTION.

SUPPLIER OF ENGINEERED STRUCTURAL COMPONENTS (I.E. STEEL JOISTS, STAIRS, PRECAST ITEMS) SHALL BE RESPONSIBLE FOR COMPLETE DESIGN AND SHALL USE ENTIRE CONTRACT DOCUMENTS TO INCLUDE ALL LOADS AND DETAIL REQUIREMENTS FROM ALL DISCIPLINES. SUPPLIER SHALL PROVIDE ADDITIONAL MATERIAL REQUIRED TO MEET ALL THEIR REQUIREMENTS FOR INSTALLATION (I.E. WIDER BEARING PLATES, SHIMS, ERECTION BOLTS ETC.).

STRUCTURAL STEEL SUPPLIER SHALL FURNISH BOLTS FOR OSHA CONNECTIONS (SEE DRAWINGS FOR DETAILS).

WALL SHORING SHALL BE INSTALLED PRIOR TO BACKFILLING BEHIND ALL BUILDING RETAINING WALLS, UNLESS ALL RESTRAINING SLABS ARE INSTALLED. USE HANDTAPPING ONLY WHEN WITHIN 8'–0", OR WITHIN HALF THE WALL HEIGHT OF BACKFILLED WALL.

CONTINUOUS FOUNDATION DRAIN PIPES (FRENCH DRAINS) OR WEEP HOLES SHALL BE PROVIDED BEHIND ALL BASEMENT WALLS AND ALL EXTERIOR RETAINING WALLS THAT RETAIN MORE THAN 3'–0" OF SOIL. WEEP HOLES WHERE USED SHALL BE 2" IN DIAMETER AT 6'–0" O.C. MAXIMUM.

BUILDING TOLERANCES:

STANDARD TOLERANCES SHALL BE BASED ON THE REQUIREMENTS OF THE AISC CODE OF STANDARD PRACTICE AND ACI 117, STANDARD SPECIFICATIONS FOR TOLERANCES FOR CONCRETE CONSTRUCTION AND MATERIALS.

SEQUENCING CONSTRUCTION AND LATERAL STABILITY:

THE STRUCTURAL COMPONENTS BY THEMSELVES ARE A NON-SELF-SUPPORTING STRUCTURE. LATERAL FORCES DUE TO WIND, EARTHQUAKE, OR SOIL ARE CARRIED BY THE ROOF AND FLOOR DIAPHRAGMS TO THE LATERAL SYSTEM. CERTAIN ELEMENTS SHOWN ON OR LOCAL STABILITY OF OTHER ELEMENTS (SUCH AS BEAMS, COLUMNS, AND WALLS). IF, DUE TO SEQUENCING OF CONSTRUCTION, THESE STABILITY ELEMENTS ARE NOT IN PLACE, THE CONTRACTOR SHALL RETAIN A LICENSED STRUCTURAL ENGINEER WHO SHALL INVESTIGATE WHERE TEMPORARY SHORING/BRACING IS REQUIRED, AND SHALL DESIGN THIS TEMPORARY SHORING/BRACING. THE CONTRACTOR SHALL PROVIDE THIS SHORING/BRACING UNTIL THE REQUIRED STRUCTURAL ELEMENTS AND THEIR CONNECTIONS HAVE BEEN INSTALLED AND REACH THEIR FINAL DESIGN STRENGTHS.

MISCELLANEOUS:

REFER TO ARCHITECTURAL, MECHANICAL, ELECTRICAL, CIVIL, ELEVATOR, OR OTHER SPECIALTY ENGINEERING DRAWINGS FOR DIMENSIONS NOT SHOWN, INCLUDING BUT NOT LIMITED TO: SIZE AND LOCATION OF CURBS, EQUIPMENT HOUSEKEEPING PADS, WALL AND FLOOR OPENINGS, BLOCKOUTS, FLOOR DEPRESSIONS, SUMPS, DRAINS, ANCHOR BOLTS, EMBEDDED ITEMS, ARCHITECTURAL TREATMENT, ETC. CONTRACTOR SHALL VERIFY DIMENSIONS AND RESOLVE DISCREPANCIES OR CONFLICTS PRIOR TO CONSTRUCTION. WHERE SECTIONS ARE INDICATED ON THE PLAN BY A NUMBER AND A DRAWING NUMBER THUS, 1/S5.01, THE INDICATED SECTION (1) IS SHOWN ON STRUCTURAL DRAWING S5.01.

ALL WINDOW SYSTEMS SHALL BE DESIGNED TO ACCOMMODATE VERTICAL DEFLECTION OF THE STRUCTURE OF 1/2" MINIMUM LIVE LOAD DEFLECTION, UNLESS GREATER VALUE IS NOTED ON PLANS OR DETAILS.

FLOOR FLATNESS/LEVELNESS SHALL MEET ARCHITECTURAL SPECIFICATIONS (1/4" IN 10 FOOT MINIMUM LEVELNESS UNLESS TIGHTER REQUIREMENT IN SPECIFICATIONS) IN HEIGHT FOR ALL STRUCTURAL SYSTEMS. CONTRACTOR SHALL INCLUDE COST FOR LEVELING ALL FLOORS. FOR ESTIMATING PURPOSES ONLY, ASSUME 1/2" THICK LEVELING AGENT OVER 15% OF FLOOR AREA.

FABRICATOR APPROVAL:

SPECIAL INSPECTIONS NOTED ABOVE APPLY TO SHOP FABRICATED ASSEMBLIES IN ADDITION TO ON-SITE WORK UNLESS THE FABRICATOR IS AN "APPROVED FABRICATOR" AS DEFINED IN 2022 CBC.

STRUCTURAL OBSERVATION:

ENGINEER OF RECORD SHALL PROVIDE VISUAL OBSERVATION OF THE STRUCTURAL SYSTEM, FOR GENERAL CONFORMANCE TO THE APPROVED PLANS AND SPECIFICATIONS, AT SIGNIFICANT CONSTRUCTION STAGES AND AT THE COMPLETION OF THE STRUCTURAL SYSTEM. CONTRACTOR IS REQUIRED FOR COORDINATING THE TIMING OF SITE VISITS AND SHALL INCLUDE A MINIMUM OF 3 VISITS. THESE VISITS ARE TO BE PAID BY THE CONTRACTOR. STRUCTURAL OBSERVATION DOES NOT INCLUDE OR WAIVE THE RESPONSIBILITY FOR THE INSPECTIONS REQUIRED BY THE BUILDING CODE (NOTED ABOVE).

INSTRUCTIONS TO BIDDERS CONTINGENCIES:

1. UNDER NO CIRCUMSTANCES SHALL THESE DRAWINGS BE "FINAL BID" UNTIL THE PROJECT IS FULLY PERMITTED.
2. ALL PRELIMINARY PRICING EFFORTS SHALL BE CONSIDERED TO BE ESTIMATES ONLY AND SHALL INCLUDE THE NECESSARY CONTINGENCIES, ALLOWANCES, ALTERNATES, ETC. AS APPROPRIATE TO ACCOUNT FOR MODIFICATIONS AND ADDITIONS THAT WILL OCCUR TO THE DRAWINGS DURING THE FINALIZATION OF THE DESIGN AND PERMITTING.
3. THE OWNER OR CONTRACTOR SHALL UTILIZE THE FOLLOWING MINIMUM CONTINGENCIES FOR EACH OF THE STRUCTURAL ELEMENT COSTS TO BE USED AT THE SOLE DISCRETION OF THE STRUCTURAL ENGINEER:

CONSTRUCTION DOCUMENTS/FINAL BID 3% MINIMUM

ALL OF THE "FINAL BID" CONTINGENCIES NOT USED BY THE STRUCTURAL ENGINEER SHALL BE REFUNDED TO THE OWNER PRIOR TO THE CLOSEOUT OF THE PROJECT.

4. ANY MODIFICATIONS, DELETIONS OR ELIMINATIONS TO THE STRUCTURAL BIDDING AND CONTINGENCY REQUIREMENTS, WITHOUT THE CONSENT OF THE STRUCTURAL ENGINEER, SHALL AUTOMATICALLY INDEMNIFY THE STRUCTURAL ENGINEER OF ANY COSTS THAT MAY ARISE DURING THE DESIGN AND CONSTRUCTION OF THE PROJECT.
5. WHERE DISCREPANCIES OCCUR WITHIN THE DRAWINGS THE CONTRACTOR WILL EITHER RESOLVE THE DISCREPANCIES WITH THE ARCHITECT BEFORE BIDDING OR INCLUDE THE GREATER COST ITEM IN THE BID AND RESOLVE THE DISCREPANCY PRIOR TO CONSTRUCTION.

NOTE TO CONTRACTOR REGARDING PRICING/BIDDING OF CITY SUBMITTAL DRAWINGS:

THESE DRAWINGS HAVE BEEN PREPARED FOR CITY SUBMITTAL, AND ARE NOT TO BE CONSIDERED 100% CONSTRUCTION DOCUMENTS UNTIL CITY PLAN REVIEW HAS BEEN COMPLETED AND FINAL BUILDING PERMIT HAS BEEN ISSUED. IF THESE DOCUMENTS ARE TO BE USED FOR PRICING, BID, OR STEEL MILL ORDER, THE CONTRACTOR SHALL PROVIDE IN THE PROJECT BUDGET AN ALLOWANCE FOR POTENTIAL CHANGES BETWEEN THE CITY SUBMITTAL DRAWINGS AND THE FINAL APPROVED SUBMITTAL AND CONSTRUCTION DOCUMENTS. ADDITIONALLY, MISCELLANEOUS ITEMS MAY NOT BE SHOWN ON THESE DRAWINGS. THESE ITEMS INCLUDE, BUT ARE NOT LIMITED TO, ELEVATOR AND EQUIPMENT SUPPORTS, BLOCKOUTS, ETC. REFER TO ARCHITECTURAL, MECHANICAL, ELECTRICAL, AND OTHER SPECIALTY DRAWINGS FOR ADDITIONAL INFORMATION. THE CONSTRUCTION BUDGET SHALL INCLUDE THESE ITEMS. THE STRUCTURAL ENGINEER WILL NOT BE RESPONSIBLE FOR CHANGE ORDER COSTS INCURRED (INCLUDING DISCARDED MATERIAL COSTS) DUE TO BIDDING OR STEEL MILL ORDER FROM THESE DRAWINGS. CONTACT STRUCTURAL ENGINEER FOR CLARIFICATION IF THE SCOPE AND QUANTITY OF ALLOWANCE TO BE CARRIED IS NOT CLEAR.

CONTRACTOR RESPONSIBILITY:

EACH CONTRACTOR OR SUB-CONTRACTOR RESPONSIBLE FOR THE CONSTRUCTION OF THE WIND AND/OR SEISMIC RESISTING SYSTEM THAT IS LISTED IN THE STATEMENT OF SPECIAL INSPECTIONS SHALL SUBMIT A WRITTEN STATEMENT OF RESPONSIBILITY TO THE BUILDING OFFICIAL AND THE OWNER PRIOR TO THE COMMENCEMENT OF WORK REQUIRING SPECIAL INSPECTION. THE CONTRACTOR'S STATEMENT OF RESPONSIBILITY SHALL CONTAIN ACKNOWLEDGMENT OF AWARENESS OF THE SPECIAL REQUIREMENTS CONTAINED IN THE STATEMENT OF SPECIAL INSPECTIONS.

DEFERRED SUBMITTALS: (PER 2012 IBC 107.3.4.1)

FOR THE PURPOSES OF THIS SECTION, DEFERRED SUBMITTALS ARE DEFINED AS THOSE PORTIONS OF THE DESIGN WHICH ARE NOT SUBMITTED AT THE TIME OF THE APPLICATION AND THAT ARE TO BE SUBMITTED TO THE BUILDING OFFICIAL WITHIN A SPECIFIED PERIOD.

DOCUMENTS FOR DEFERRED SUBMITTAL ITEMS SHALL BE SUBMITTED TO THE PROFESSIONAL IN RESPONSIBLE CHARGE FOR REVIEW. THE CONTRACTOR SHALL FORWARD THE REVIEWED DOCUMENTS TO BUILDING OFFICAL WITH A NOTATION INDICATING THAT THE DEFERRED SUBMITTAL DOCUMENTS HAVE BEEN REVIEWED AND BEEN FOUND TO BE IN GENERAL CONFORMANCE TO THE DESIGN OF THE BUILDING. THE DEFERRED SUBMITTAL ITEMS SHALL NOT BE INSTALLED UNTIL THE DESIGN AND SUBMITTAL DOCUMENTS HAVE BEEN APPROVED BY THE BUILDING OFFICIAL.

DEFERRED SUBMITTAL ITEMS:

ALUMINUM WALKWAY
GRATING
HANDRAILS/STAIRS
SHORING EXCAVATIONS
EQUIPMENT ATTACHMENTS, INCLUDING ADD'L FRAMING REQ'D

SPECIAL INSPECTION:

PER IBC CHAPTER 17, SPECIAL INSPECTION IS REQUIRED FOR THE FOLLOWING ITEMS:

CONCRETE: VERIFICATION AND INSPECTION	CONTINUOUS	PERIODIC	REFERRENCED STANDARD (NOTE 1)	IBC REFERENCE
1. Inspection of reinforcing steel, including prestressing tendons, and placement.	–	X	ACI 318: Ch. 20, 25.2 25.3, 26.6.1–26.6.3	1908.4
2. Reinforcing bar welding: a. Verify weldability of reinforcing bars other than ASTM A706; b. Inspect single-pass fillet welds, maximum 5/16"; and c. Inspect all other welds.	 – – X	 X X –	AWS D1.4 ACI 318: 26.6.4	---
3. Inspect anchors to be installed in concrete prior to and during placement of concrete where allowable loads have been increased or where strength design is used.	–	X	ACI 318: 17.8.2	---
4. Inspection of anchors post-installed in hardened concrete members. a. Adhesive anchors installed in horizontally or upwardly inclined orientations to resist sustained tension loads. b. Mechanical anchors and adhesive anchors not defined in 4.a.	 X –	 – X	 ACI 318: 17.8.2.4 ACI 318: 17.8.2	---
5. Verifying use of required design mix.	–	X	ACI318: Ch. 19, 26.4.3, 26.4.4	1904.1, 1904.2 1908.2, 1908.3
6. Prior to concrete placement, fabricate specimens for strength tests, per form slump and air content tests, and determine the temperature of the concrete.	X	–	ASTM C172 ASTM C31 ACI 318: 26.4, 26.12	1908.10
7. Inspection of concrete and shotcrete placement for proper application techniques.	X	–	ACI 318: 26.5	1908.6, 1908.7, 1908.8
8. Verify maintenance of specified curing temperature and techniques.	–	X	ACI 318: 26.5.3–26.5.5	1908.9
9. Inspect prestressed concrete for: a. Application of prestressing forces; and b. Grouting of bonded prestressing tendons	 X X	 – –	ACI 318: 26.10	 --- ---
10. Inspect erection of precast concrete members.	–	X	ACI 318: Ch. 26.8	---
11. Verification of in-situ concrete strength, prior to stressing of tendons in post-tensioned concrete and prior to removal of shores and forms from beams and structural slab.	–	X	ACI 318: 26.11.2	---
12. Inspect formwork for shape, location and dimensions of the concrete member being formed.	–	X	ACI 318: 26.11.1.2(b)	---

NOTES:
1. WHERE APPLICABLE, SEE ALSO SECTION 1707.1, SPECIAL INSPECTION FOR SEISMIC RESISTANCE.
2. TABLES TAKEN DIRECTLY FROM IBC FOR REFERENCE.

MASONRY INSPECTION TASK	FREQUENCY (a) LEVEL 3	REFERENCE FOR CRITERIA TMS 402	REFERENCE FOR CRITERIA TMS 602	IBC REFERENCE
1. As masonry construction begins, verify that the following are in compliance: a. Proportions of site-prepared mortar. b. Grade, type and size of reinforcement connectors and anchor bolts. c. Sample panel construction.	 P P C		 ART. 2.1, 2.6A, & 2.6C ART. 3.4 ART. 1.6D	
2. Prior to grouting, verify that the following are in compliance: a. Grout space. b. Placement of reinforcement, connectors, & anchor bolts. c. Proportions of site-prepared grout.	 C C P	 SEC. 6.1, 6.3.1, 6.3.6, & 6.3.7	 ART. 3.2D & 3.2F ART. 3.2E & 3.4 ART. 2.6B & 2.4 G.1.b	
3. Verify compliance of the following during construction: a. Materials and procedures with the approved submittals. b. Placement of masonry units and mortar joint construction. c. Size and location of structural members. d. Type, size, and location of anchors, including other details of anchorage of masonry to structural members, frames, or other construction. e. Welding of reinforcement. f. Preparation, construction, and protection of masonry during cold weather (temperature below 40°F (4.4°C) or hot weather (temperature above 90°F (32.2°C). g. Placement of grout is in compliance.	 P P P C C P C	 SEC. 1.2.1(e), 6.2.1, & 6.3.1 SEC. 6.1.6.1.2	 ART. 1.5 ART. 3.3B ART. 3.3F ART. 1.8C & 1.8D ART. 3.5	1705.04, 2104 & 2105
4. Observe preparation of grout specimens, mortar specimens, and/or prisms.	C		ART. 1.4 B.2.a.3, 1.4 B.2.b.3, 1.4 B.2.c.3, 1.4 b.3, & 1.4 B.4	

NOTES:
(a) Frequency refers to the frequency of inspection, which may be continuous during the listed task or periodically during the listed task, as defined in the table.
NR=Not Required, P=Periodic, C=Continuous
(b) Required for the first 5000 sq. ft. (465 sq. m.) of AAC masonry.
(c) Required after the first 5000 sq. ft. (465 sq. m.) of AAC masonry.

STEEL: VERIFICATION AND INSPECTION	CONTINUOUS	PERIODIC	REFERENCED STANDARD (NOTE1)	IBC REFERENCE
1. Material verification of high-strength bolts, nuts and washers: a. Identification markings to conform to ASTM standards specified in the approved construction documents. b. Manufacturer's certificate of compliance required.	 – –	 X X	APPLICABLE ASTM MATERIAL SPECS AISC 360, SEC. A3.3	
2. Inspection of high-strength bolting: a. Bearing-type connections. AISC 360, Section M2.5 1704.3.3	–	X		
3. Material verification of structural steel: a. Identification markings to conform to ASTM standards specified in the approved construction documents. b. Manufacturers' certified mill test reports.	–	–	AISC 360, SEC. M2.5 ASTM A 6 OR ASTM A 568	
4. Material verification of weld filler materials: a. Identification markings to conform to AWS specification in the approved construction documents. b. Manufacturer's certificate of compliance required.	 – –	 – –	AISC 360, SEC. A3.5	
5. Inspection of welding: a. Structural steel: 1) Complete and partial penetration groove welds. 2) Multipass fillet welds. 3) Single-pass fillet welds > 5/16" 4) Single-pass fillet welds = 5/16" 5) Floor and roof deck welds. b. Reinforcing steel: 1) Verification of weld ability of reinforcing steel other than ASTM A 706. 2) Reinforcing steel-resisting flexural and Axial forces in intermediate and special Moment frames, and boundary elements of Special reinforced concrete shear walls and shear reinforcement. 3) Shear reinforcement. 4) Other reinforcing steel.	 – X X X – – – – X X –	 – – – – X X – X – – X	 AWS D1.1 AWS D1.1 AWS D1.1 AWS D1.1 AWS D1.3 AWS D1.4 ACI 318: 3.5.2	
6. Inspection of steel frame joint details for compliance with approved construction documents: a. Details such as bracing and stiffening. b. Member locations. c. Application of joint details at each connection.	 – – – –	 X – – –		

NOTES:
1. WHERE APPLICABLE SEE ALSO SECTION 1701.1, SPECIAL INSPECTION FOR SEISMIC RESISTANCE.
2. TABLES TAKEN DIRECTLY FROM IBC FOR REFERENCE.

STEEL: CONSTRUCTION OTHER THAN STRUCTURAL STEEL: VERIFICATION AND INSPECTION	CONTINUOUS	PERIODIC	REFERENCED STANDARD (NOTE1)	IBC REFERENCE
1. Material verification of cold-formed steel deck: a. Identification markings to conform to ASTM standards specified in the approved construction documents. b. Manufacturer's certified test reports.	 – –	X	APPLICABLE ASTM MATERIAL STANDARDS	
2. Inspection of welding: a. Cold formed steel deck: 1) Floor and roof deck welds. b. Reinforcing steel: 1) Verification of weldability of reinforcing steel other than ASTM A 706. 2) Reinforcing steel resisting flexural and axial forces in intermediate and special moment frames, and boundary elements of special structural walls of concrete and shear reinforcement. 3) Shear reinforcement. 4) Other reinforcing steel.	 – – X – X	 X X – X –	 AWS D1.3 ACI 318: 3.5.2 AWS D1.4	
SOILS: 1. Verify materials below shallow foundations are adequate to achieve the design bearing apacity. 2. Verify excavations are extended to proper depth and have reached proper material. 3. Perform classification and testing of compacted fill materials. 4. Verify use of proper materials, densities and lift thicknesses during placement and compaction of compacted fill. 5. Prior to placement of compacted fill, inspect subgrade and verify that site has been properly prepared. Not the responsibility of the structural engineer. Special inspection certificate to be completed by geotechnical engineer.	 – – – X –	 X X X – X		
EXPANSION, SCREW, AND EPOXY BOLTS: 1. During placement of all expansion, screw, & epoxy bolts, for visual verification of hole diameter and depth and placement of bolt and/or epoxy.	–	X		

DUTIES AND RESPONSIBILITIES OF THE SPECIAL INSPECTOR:

A) THE SPECIAL INSPECTOR SHALL OBSERVE THE WORK ASSIGNED TO BE CERTAIN IT CONFORMS WITH THE APPROVED DESIGN DRAWINGS AND SPECIFICATION.

B) THE SPECIAL INSPECTOR SHALL FURNISH INSPECTION REPORTS TO THE BUILDING OFFICIAL, AND TO THE ENGINEER.

C) UPON COMPLETION OF THE ASSIGNED WORK THE ENGINEER OR ARCHITECT SHALL COMPLETE AND SIGN THE APPROPRIATE FORMS CERTIFYING THAT TO THE BEST OF HIS KNOWLEDGE THE WORK IS IN CONFORMANCE WITH THE APPROVED PLANS AND SPECIFICATIONS AND THE APPLICABLE WORKMANSHIP PROVISIONS OF THE CODE.

ISSUED FOR BID

THESE DRAWINGS ARE THE PROPERTY OF P.A.C.E. AND SHALL NOT BE REPRODUCED IN ANY MANNER NOR BE USED FOR CONSTRUCTION UNLESS STAMPED "ISSUED FOR CONSTRUCTION".

NO | BY | DATE | REVISIONS | DATE | APP.

Registered Professional Engineer (Civil) CERTIFICATE NO. 70374 JAMES APPLEYARD Date Signed 10/31/25 ARIZONA, U.S.A.

PREPARED BY: PKA
DESIGNED BY: JA
DRAWN BY: NS
CHECKED BY: JA
SCALE: AS NOTED
DATE: SEP 2025
JOB NO. 23364

TITLE: GENERAL STRUCTURAL NOTES

JOB: TOWN OF JEROME WASTEWATER TREATMENT PLANT
YAVAPAI AZ

PREPARED BY: PACE Advanced Water Engineering
8723 E. VIA de COMMERCIO, SUITE A-204 | SCOTTSDALE, CA 85258
P: (408) 991-3595 | www.pacewater.com
TAYLOR B. PIERCE R.C.E 70097 DATE

SHEET S1.2
53 OF 99 SHEETS
JOB NO. 23364

PK ASSOCIATES, LLC
6900 E. Belleview Ave. #200
Greenwood Village, Colorado 80111
Phone: (720) 799-1058
Email: cadd@pkastructural.com
Website: www.pkastructural.com

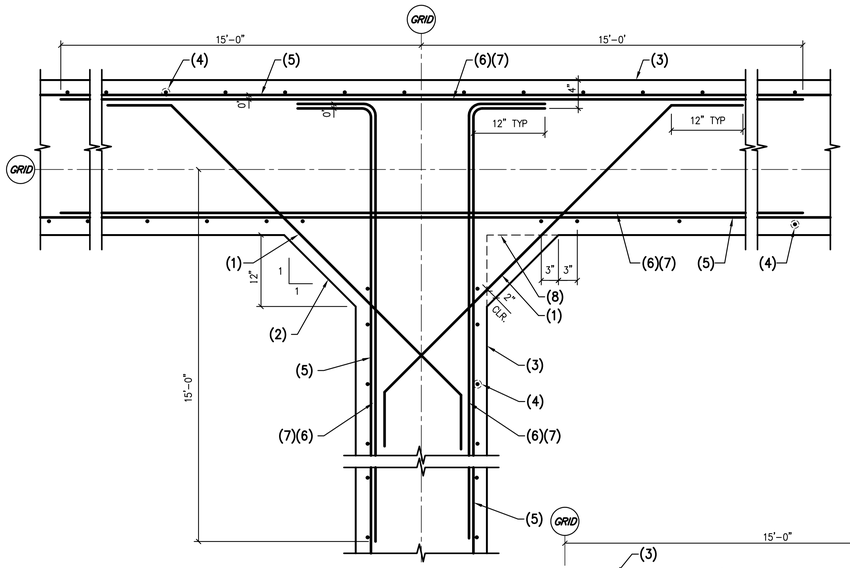

NOTES:
1. #4 AT 6" O.C. (NOT REQ'D AT 06A).
2. CHAMFER AT CORNER.
3. CONCRETE WALL.
4. VERTICAL WALL REINFORCING PER SHEET S3.1.
5. #6 AT 9" O.C. EACH FACE TYPICAL HORIZONTAL WALL REINFORCING. OPTION PROVIDE.
6. PROVIDE ADDITIONAL #6 AT 9" O.C. EACH FACE HORIZONTAL REINFORCING AT CORNERS (NET 4.5" O.C.).
7. PROVIDE ADDITIONAL HORIZONTAL REINFORCING FROM TOP OF WALL DOWN TO 5'-0" ABOVE MAT SLAB.
8. NO CHAMFER AT 06A.

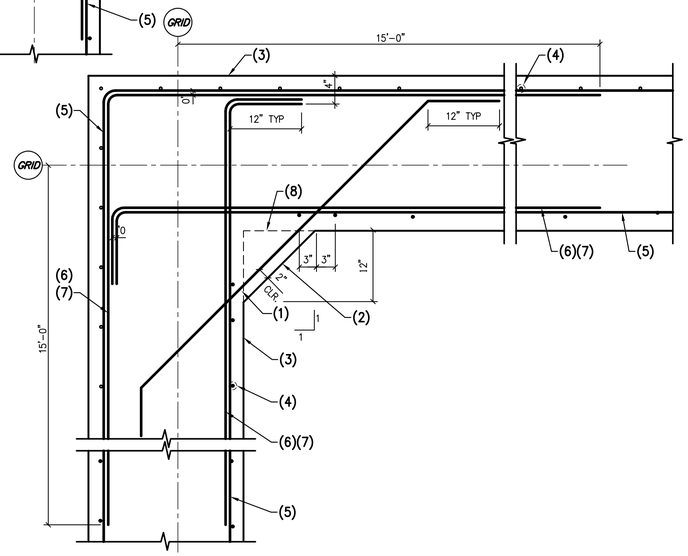

06 PLAN VIEW AT CONCRETE WALL INTERSECTIONS
06A AS NOTED
NO SCALE

BOLT DIAMETER	VERT BOLT EMBEDMENT LENGTH	HORIZ BOLT EMBEDMENT LENGTH	HEADED STUD FILLET WELD SIZE, "S".
1/2"	6"	4"	1/4"
5/8"	6"	4"	5/16"
3/4"	7"	5"	5/16"
7/8"	8"	6"	5/16"
1"	9"	7"	3/8"
1 1/8"	10"	8"	-----
1 1/4"	11"	9"	-----

NOTES:
PROVIDE ANCHORS, ANCHOR BOLTS AND EXPANSION BOLTS PER THIS SCHEDULE UNLESS NOTED ON PLANS OR DETAILS.

EXPANSION OR ADHESIVE BOLTS USED IN MASONRY SHALL HAVE I.C.B.O. APPROVAL IN MASONRY.

AT "ANCHORS" USE 3/16" FILLET WELD("S").

THICKNESS OF DRYPACK DOES NOT APPLY TOWARDS EMBEDMENT.

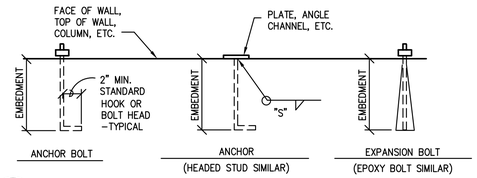

03 TYPICAL ANCHOR, ANCHOR BOLT, AND EXPANSION BOLT SCHEDULE
NO SCALE

STANDARD ASTM A615 (60 KSI) REBAR								
	CLASS B TENSION SPLICE LENGTHS						COMP. BARS	
CONC. PSI	f'c = 2,500 PSI/ f'c = 3,000 PSI		f'c = 4,000 PSI		f'c = 5,000 PSI AND HIGHER		f'c = ALL	
BAR LOCATION	REGULAR CLASS	TOP CLASS	REGULAR CLASS	TOP CLASS	REGULAR CLASS	TOP CLASS	STD LAP	ENCLOSED W/ SPIRAL TIES
SIZE								
#3	24"	31"	19"	24"	17"	22"	12"	12"
#4	32"	41"	25"	33"	23"	29"	15"	12"
#5	39"	51"	31"	41"	28"	36"	19"	14"
#6	47"	61"	37"	49"	34"	43"	23"	17"
#7	69"	89"	54"	71"	49"	63"	26"	20"
#8	78"	102"	62"	81"	56"	72"	30"	23"
#9	88"	115"	70"	91"	63"	81"	34"	25"
#10	100"	129"	79"	102"	70"	92"	38"	29"
#11	110"	143"	87"	113"	78"	102"	42"	32"

NOTES:
1. TOP BARS ARE ANY HORIZONTAL BARS PLACED SO THAT MORE THAN 12" OF FRESH CONCRETE IS CAST IN THE MEMBER BELOW THE REINFORCEMENT.
2. UNLESS NOTED OTHERWISE, LAP SPLICES IN CONCRETE BEAMS, SLABS AND WALLS SHALL BE CLASS "B" TENSION SPLICES. CONCRETE COLUMNS SHALL USE COMPRESSION LAP SPLICES.
3. CONTACT STRUCTURAL ENGINEER IF CENTER TO CENTER SPACING OF REINFORCING IS LESS THAN OR EQUAL TO 3 BAR DIAMETERS, <3db OR 2db CLEAR SPACING BETWEEN BARS.

01 LAP SCHEDULE FOR REINFORCING STEEL
NO SCALE

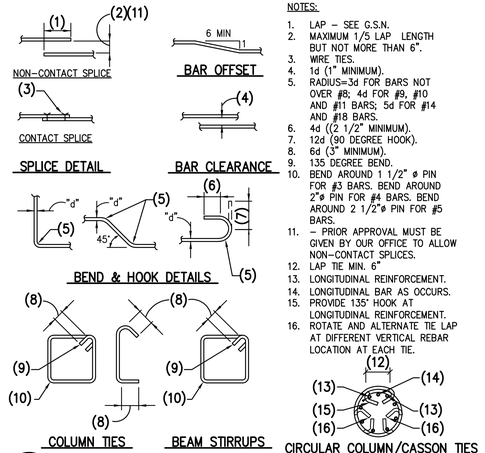

NOTES:
1. LAP – SEE G.S.N.
2. MAXIMUM 1/5 LAP LENGTH BUT NOT MORE THAN 6".
3. WIRE TIES.
4. 1d (1" MINIMUM).
5. RADIUS=3d FOR BARS NOT OVER #8; 4d FOR #9, #10 AND #11 BARS; 5d FOR #14 AND #18 BARS.
6. 4d ((2 1/2" MINIMUM).
7. 12d (90 DEGREE HOOK).
8. 6d (3" MINIMUM).
9. 135 DEGREE BEND.
10. BEND AROUND 1 1/2" ø PIN FOR #3 BARS. BEND AROUND 2"ø PIN FOR #4 BARS. BEND AROUND 2 1/2"ø PIN FOR #5 BARS.
11. – PRIOR APPROVAL MUST BE GIVEN BY OUR OFFICE TO ALLOW NON-CONTACT SPLICES.
12. LAP TIE MIN. 6"
13. LONGITUDINAL REINFORCEMENT.
14. LONGITUDINAL BAR AS OCCURS.
15. PROVIDE 135° HOOK AT LONGITUDINAL REINFORCEMENT.
16. ROTATE AND ALTERNATE TIE LAP AT DIFFERENT VERTICAL REBAR LOCATION AT EACH TIE.

04 TYPICAL CONCRETE REINFORCING BAR DETAILS
NO SCALE

STANDARD ASTM A615 (60 KSI) REBAR							
BAR SIZE	EMBEDMENT		EXTENSION		MINIMUM OUTSIDE DIAMETER OF BEND (INCHES)	CLASS A STRAIGHT BAR DEVELOPMENT	
	3000 PSI CONCRETE	5000 PSI CONCRETE & HIGHER	90° HOOK	180° HOOK		5000 PSI & HIGHER	3000 PSI
#3	6.00	6.00	4.5	2.5	3.00	13	17
#4	7.75	6.00	6.0	2.5	4.00	17	22
#5	9.75	7.50	7.5	2.5	5.00	22	28
#6	11.50	9.00	9.0	3.0	6.00	26	33
#7	13.50	10.50	10.5	3.5	7.00	38	48
#8	15.50	12.00	12.0	4.0	8.00	43	55
#9	17.50	13.50	13.75	4.75	11.28	48	62
#10	19.50	15.25	15.25	5.25	12.70	54	70
#11	21.75	16.75	17.00	5.75	14.10	60	78

NOTES:
1. EMBEDMENT LENGTH IS BASED ON 2 1/2" MINIMUM SIDE COVER AND 2" MINIMUM END COVER.
2. CONTACT STRUCTURAL ENGINEER IF CENTER TO CENTER SPACING OF REINFORCING IS LESS THAN OR EQUAL TO 3 BAR DIAMETERS <3db OR 2db CLEAR SPACING BETWEEN BARS.
3. WHERE CLEAR COVER <db, MULTIPLY EMBEDMENT AND STRAIGHT BAR DEVELOPMENT BY 1.5.

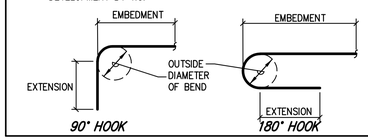

02 HOOKED DOWEL DEVELOPMENT LENGTH IN TENSION (INCHES)
NO SCALE

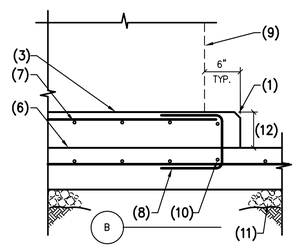

NOTES:
1. CHAMFER EDGES.
2. CONCRETE SLAB OR FINISHED GRADE WHERE OCCURS.
3. CONCRETE EQUIPMENT SLAB.
4. #4 AT 12" O.C. EACH WAY, TOP AND BOTTOM.
5. AT ABUTTING CONCRETE SLABS, INSTALL 1/2" EXPANSION JOINT MATERIAL ALL ROUND.
6. CONCRETE SLAB (ON GRADE AS SOIL OCCURS).
7. #4 AT 12" O.C. EACH WAY.
8. #3 AT EACH CORNER AND AT 48" O.C. MAX. x 6" 6" 6"
9. EDGE OF MECH'L UNIT.
10. #3 AT BEND, TYP.
11. SOIL AS OCCURS.
12. 4" MIN. VARIES AS REQ'D WHEN OVER A SLOPED SLAB.

08 CONCRETE EQUIPMENT PAD
NO SCALE

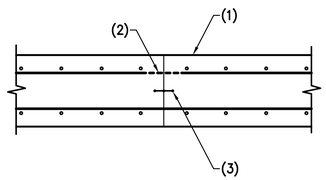

NOTES:
1. CONCRETE WALL.
2. CUT EVERY OTHER BAR ON EACH FACE OF WALL. STAGGER CUT BARS.
3. CONT. WATERSTOP, GREENSTREAK PVC RIBBED WITH CENTER BULB, MODEL #735 PER MECH'L, (OR APPROVED EQUAL.)

NOTE:
LOCATION OF VERTICAL WALL C.J. TO BE AT A MAXIMUM OF TWICE THE WALL HEIGHT.

07 PLAN – WALL C.J.
NO SCALE

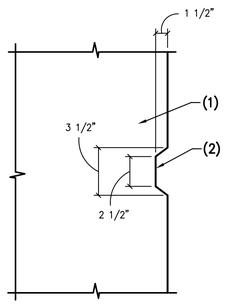

NOTES:
1. CONCRETE.
2. KEYED JOINT – REMOVE FORM MATERIAL PRIOR TO PLACING ADJACENT CONCRETE.

NOTE:
ALL DIMENSIONS ARE ± 1/2".

05 TYPICAL KEY IN CONCRETE
NO SCALE

NO	BY	DATE	REVISIONS	DATE	APP.

Registered Professional Engineer (Civil) CERTIFICATE NO. 70374 JAMES APPLEYARD 10/31/25 Date Signed ARIZONA, U.S.A.

PREPARED BY: PKA
DESIGNED BY: JA
DRAWN BY: NS
CHECKED BY: JA
DATE: SEP 2025
JOB NO.: 23364
SCALE: AS NOTED

TITLE: TYPICAL DETAILS

JOB: TOWN OF JEROME WASTEWATER TREATMENT PLANT YAVAPAI AZ

THESE DRAWINGS ARE THE PROPERTY OF P.A.C.E. AND SHALL NOT BE REPRODUCED IN ANY MANNER NOR BE USED FOR CONSTRUCTION UNLESS STAMPED "ISSUED FOR CONSTRUCTION".

ISSUED FOR BID

PREPARED BY:
PACE
Advanced Water Engineering
8723 E. VIA de VENTURA, SUITE 230 | SCOTTSDALE, CA 85258
P: (480) 991-3995 | www.pacewater.com
TAYLOR B. PIERCE R.C.E 70097 DATE

SHEET S1.3
54 OF 99 SHEETS

JOB NO. 23364

PK ASSOCIATES, LLC
6900 E. Belleview Ave. #200
Greenwood Village, Colorado 80111
Phone: (720) 799-1058
Email: cadd@pkastructural.com
Website: www.pkastructural.com

NO	BY	DATE	REVISIONS	DATE	APP.

THESE DRAWINGS ARE THE PROPERTY OF P.A.C.E. AND SHALL NOT BE REPRODUCED IN ANY MANNER NOR BE USED FOR CONSTRUCTION UNLESS STAMPED "ISSUED FOR CONSTRUCTION".

NOMINAL BEAM DEPTH "D"	NUMBER OF 1" DIA. ASTM, F3125 BOLTS
UP TO 7"	2
8" – 11"	2
12" – 14"	3
15" – 17"	4
18" – 20"	5
21" – 23"	6
24" – 29"	7
30" – 32"	8
33" – 35"	9
36"	10

FRAMING NOTES:

1. THE TYPICAL STEEL BEAM TO STEEL COLUMN OR STEEL BEAM TO STEEL BEAM CONNECTION CONSISTS OF 3/8" SINGLE SHEAR PLATES WITH 1"ø. ASTM F3125 BOLTS. USE 5/8" SHEAR PLATES WHERE "D" = 27" OR GREATER.
2. ALL BOLTS SHALL BE INSTALLED USING SHORT SLOTTED HOLES IN EITHER THE BEAM WEB OR THE SHEAR PLATE PER LATEST AISC SPECIFICATIONS.

18 BOLT SCHEDULE FOR TYPICAL STEEL CONNECTIONS
NO SCALE

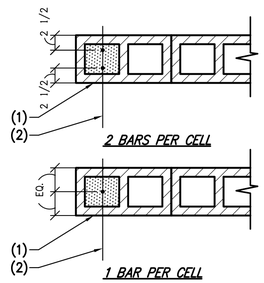

NOTES:

1. MASONRY WALL.
2. VERTICAL WALL REINFORCING.

NOTE:
SEE PLANS AND/OR TYPICAL DETAILS FOR NUMBER OF CELLS REINFORCED (GREATER REQUIREMENT GOVERNS).

15 TYPICAL REINFORCING PLACEMENT – EACH FACE
NO SCALE

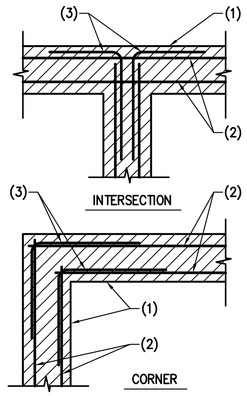

NOTES:

1. MASONRY WALL.
2. BOND BEAM REINFORCING.
3. CORNER BARS SAME SIZE AND SPACING AS HORIZONTAL REINFORCING – LAP PER G.S.N. (24" MINIMUM).

12 MASONRY BOND BEAM AT INTERSECTING WALLS
NO SCALE

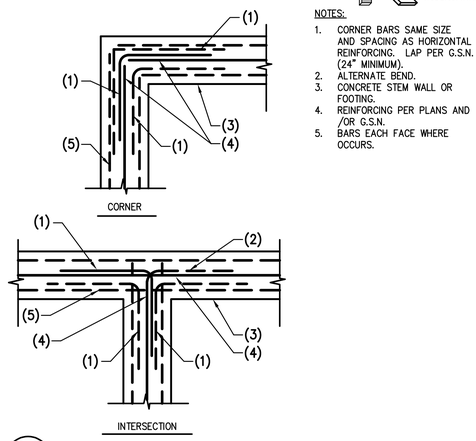

NOTES:

1. CORNER BARS SAME SIZE AND SPACING AS HORIZONTAL REINFORCING. LAP PER G.S.N. (24" MINIMUM).
2. ALTERNATE BEND.
3. CONCRETE STEM WALL OR FOOTING.
4. REINFORCING PER PLANS AND /OR G.S.N.
5. BARS EACH FACE WHERE OCCURS.

07 PLAN – CORNER REINFORCING IN CONCRETE GRADE BEAM WALL AND/OR FOOTING
NO SCALE

H	t	VERTICAL WALL REINFORCING		T	HEEL	TOE	FOOTING HEEL REINF.	SHEAR KEY		REMARKS
		WALL	DOWELS					Sd	Sw	
0'–0" TO 3'–0"	8"	#5 AT 18" O.C.	---	15"	0'–8"	0'–8"	---	---	---	SEE NOTE 1 & 2
3'–1" TO 5'–0"	8"	#5 AT 18" O.C.	---	12"	1'–1"	1'–1"	#5 AT 18" O.C.	12"	8"	SEE NOTE 1 & 2
5'–1" TO 7'–0"	8"	#5 AT 14" O.C.	---	12"	1'–7"	1'–6"	#5 AT 18" O.C.	24"	8"	SEE NOTE 1 & 2
7'–1" TO 9'–0"	8"	#5 AT 12" O.C.	#6 AT 12" O.C.	14"	2'–2"	2'–0"	#5 AT 12" O.C.	32"	8"	SEE NOTE 1 & 2
9'–1" TO 10'–0"	8"	#5 AT 12" O.C.	#7 AT 12" O.C.	20"	2'–8"	2'–6"	#5 AT 8" O.C.	32"	8"	SEE NOTE 1 & 2

NOTES:

1. USE #4 AT 12" O.C. HORIZONTALS.
2. LAP AND/OR EMBED ALL DOWELS 40 BAR DIAMETERS MINIMUM.

NOTE: REF DETAIL 20 FOR RETAINING WALLS ABOVE 10'–0" TALL

17 CONCRETE RETAINING WALL
NO SCALE

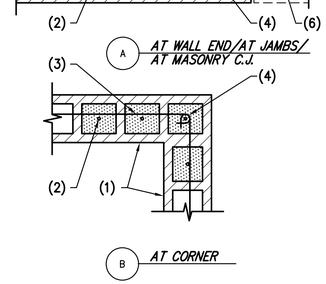

NOTES:

1. MASONRY WALL.
2. VERT. REINF. PER SCHEDULE.
3. HORIZ. REINF. PER SCHEDULE.
4. STANDARD HOOK PER TYP. DETAIL AT ENDS OF ALL WALLS.
5. MASONRY WALL AT C.J. AS OCCURS.
6. HORIZONTAL CONT. AT BOND BEAMS PER DETAIL 15.

16 PLAN VIEW – TYPICAL HORIZONTAL REINF. AT END OF WALL
NO SCALE

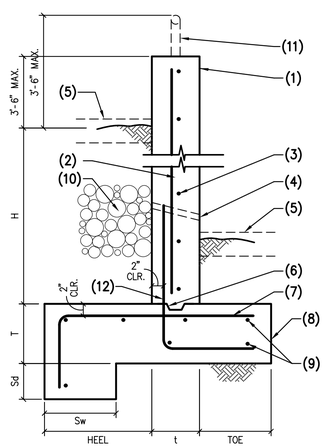

NOTES:

1. CONCRETE WALL.
2. VERTICAL WALL REINFORCING.
3. HORIZONTAL REINFORCING.
4. 1" DIA. WEEP HOLES AT 32" O.C.
5. FINISHED GRADE OR CONCRETE SLAB WHERE OCCURS.
6. CONTINUOUS KEY – SEE TYPICAL KEY IN CONCRETE DETAIL.
7. FOOTING HEEL REINFORCING.
8. CONCRETE FOOTING.
9. #4 AT 16" O.C.
10. 1 1/2" DIA. ROCK IN 12" X 12" X CONTINUOUS ROCK POCKET.
11. HANDRAIL ATTACHMENT BY OTHERS.
12. DOWELS TO MATCH AND LAP WALL REINFORCING U.N.O IN SCHEDULE.

17 CONCRETE RETAINING WALL
NO SCALE

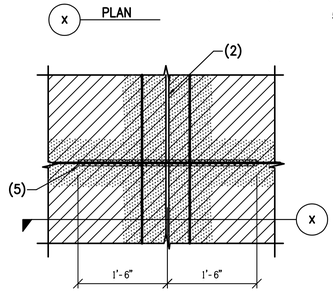

NOTES:

1. MASONRY WALL.
2. CONTROL JOINT.
3. CONTROL JOINT MATERIAL PER ARCHITECTURAL DRAWINGS AND SPECIFICATIONS.
4. 1 VERTICAL BAR EACH SIDE IN SOLID GROUTED CELLS TO MATCH VERTICAL WALL REINFORCING.
5. CONTINUOUS BOND BEAM BARS – WRAP BARS WITH MASTIC FOR BOND BREAK.

NOTE:
BOND BEAM BARS SHALL NOT BE LAPPED WITHIN 8'–0" OF CONTROL JOINT.

13 CONTROL JOINT IN MASONRY WALL
NO SCALE

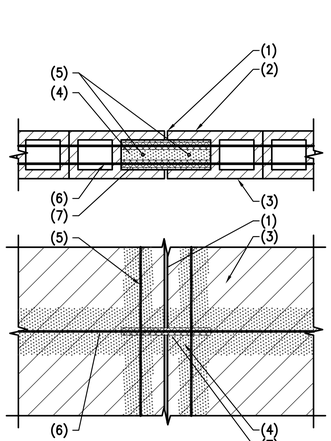

NOTES:

1. RAKE JOINT.
2. OPEN END MASONRY UNIT.
3. MASONRY WALL.
4. GROUT SOLID.
5. VERT. BAR EACH SIDE OF CONTROL JOINT TO MATCH VERT. WALL REINF.
6. HORIZ. REINF. CONT. THRU CONTROL JOINT.
7. WRAP HORIZ. BAR 8" EACH SIDE OF JOINT W/ MASTIC.

14 CONTROL JOINT IN MASONRY BEAM
NO SCALE

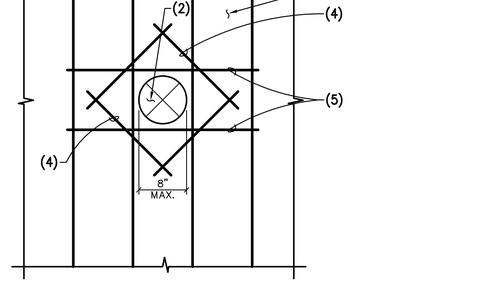

NOTES:

1. TYPICAL WALL REINF.
2. OPENING IN CONCRETE WALL.
3. CONCRETE WALL.
4. 1 – #5 DIAG. BARS IN THE CENTER OF WALL.
5. 1 – #5 TOP AND BOTTOM EACH FACE.

10 TYPICAL SMALL OPENING IN CONCRETE WALL
NO SCALE

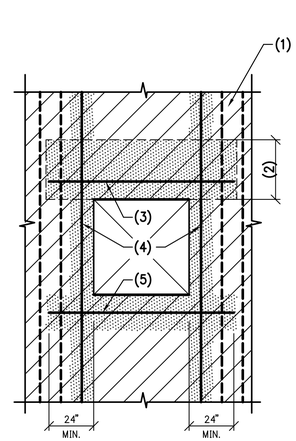

NOTES:

1. MASONRY WALL.
2. DEPTH OF MASONRY LINTEL BEAM – SEE PLANS AND DETAILS.
3. LINTEL REINFORCING.
4. VERTICAL BAR IN GROUTED CELL TO MATCH VERTICAL WALL REINFORCING – FULL HEIGHT OF WALL – SEE SCHEDULE BELOW, ONE BAR PER CELL.
5. 2 #5 BARS IN 8" DEEP SOLID GROUTED BOND BEAM – HOOK BARS UP AT CORNERS.

JAMB BARS	WALL OPENING
2	0'–0" → 4'–0"
3	4'–1" → 8'–0"
4	8'–1" → 10'–0"
5	10'–1" → 12'–0"
2 BARS IN FIRST 4 CELLS (8 BARS)	12'–1" → 16'–0"
2 BARS IN FIRST 6 CELLS (12 BARS)	16'–1" → 20'–0"
FOR OPENINGS LARGER THEN 20'–0" SEE PLAN. IF SPECIAL JAMB BARS ARE NOT SHOWN. USE WALL BRACES TO STRUCTURE.	

11 TYPICAL OPENING IN MASONRY WALL
NO SCALE

Registered Professional Engineer (Civil) CERTIFICATE NO. 70374 JAMES APPLEYARD Date Signed 10/31/25 ARIZONA, U.S.A.

PREPARED BY: PKA
DESIGNED BY: JA
DRAWN BY: NS
CHECKED BY: JA
SCALE: AS NOTED
DATE: SEP 2025
JOB NO.: 23364

TITLE: TYPICAL DETAILS

JOB: TOWN OF JEROME WASTEWATER TREATMENT PLANT
YAVAPAI AZ

ISSUED FOR BID

PREPARED BY:
PACE
Advanced Water Engineering
8723 E. Via de Commercio, Suite A, Scottsdale, AZ 85258
P: (408) 991-3595 | www.pacewater.com
TAYLOR B. PIERCE R.C.E 70097 DATE

SHEET
S1.4
55 OF 99 SHEETS

JOB NO. 23364

PK ASSOCIATES, LLC
6900 E. Belleview Ave. #200
Greenwood Village, Colorado 80111
Phone: (720) 799-1058
Email: cadd@pkastructural.com
Website: www.pkastructural.com

NOTES:

1. 8" CONCRETE WALL.
2. #7 DOWELS AT 8" O.C.
3. #5 AT 12" VERTICALS.
4. #4 AT 12" HORIZONTALS.
5. 28" MIN.
6. L2x2x1/4 W/ 1/2"ø H.S. AT 18" O.C.
7. GRATING AND ATTACHMENT BY OTHERS.
8. L3x3x1/4 WITH 1/2" HILTI KWIK HUS EZ SCREW ANCHORS AT 24" O.C.
9. CONCRETE FOOTING W/ #5 AT 12" O.C. E.W. TOP & BOTTOM.
10. 1/2"x8"x5" STEEL PLATE WITH 2- 1/2"ø H.S. AT 5" O.C.
11. HANDRAIL AND ATTACHMENT BY OTHERS.
12. CONCRETE SLAB OR FINISHED GRADE AS OCCURS.
13. WATERSTOP PER PACE PER SPECIFICATION SECTION 03 1500.

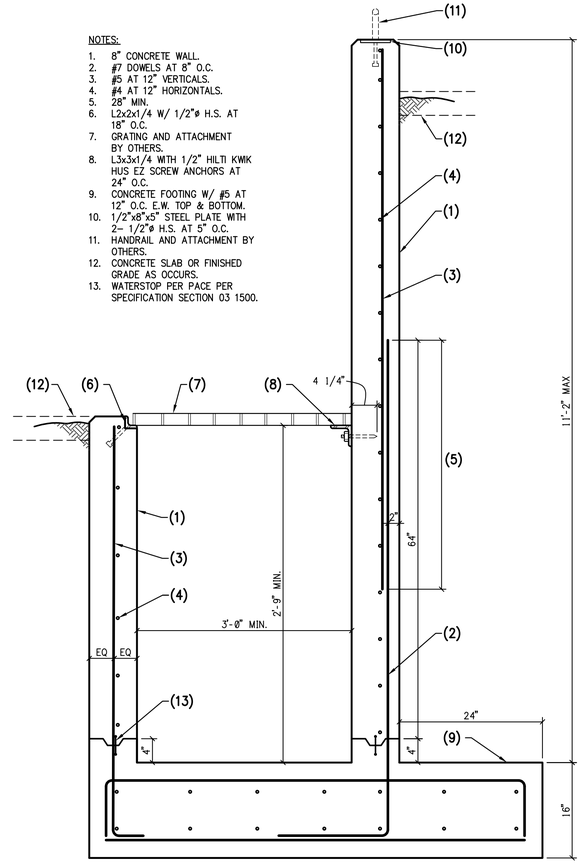

19 CONCRETE RETAINING WALL AT CHLORINE CONTACT CHANNEL
NO SCALE

NOTES:

1. 8" CONCRETE WALL.
2. #5 AT 12" O.C.
3. #8 AT 12" O.C.
4. 1" DIA. WEEP HOLES AT 32" O.C.
5. FINISHED GRADE OR CONCRETE SLAB WHERE OCCURS.
6. CONTINUOUS KEY – SEE TYPICAL KEY IN CONCRETE DETAIL.
7. #5 AT 8" O.C.
8. CONCRETE FOOTING.
9. HANDRAIL ATTACHMENT BY OTHERS.
10. 1 1/2" DIA. ROCK IN 12" X 12" X CONTINUOUS ROCK POCKET.

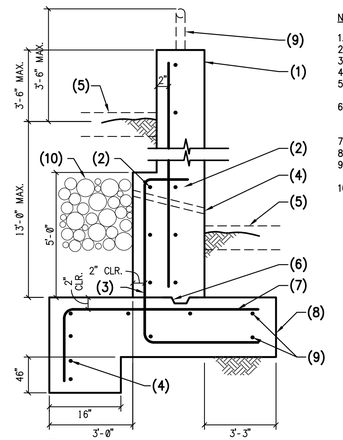

20 12'-0" TALL RETAINING WALL
NO SCALE

NO	BY	DATE	REVISIONS	DATE	APP.

Registered Professional Engineer (Civil) CERTIFICATE NO. 70374 JAMES APPLEYARD Date Signed 10/31/25 ARIZONA, U.S.A.

PREPARED BY: PKA
DESIGNED BY: JA
DRAWN BY: NS
CHECKED BY: JA
SCALE: AS NOTED
DATE: SEP 2025
JOB NO.: 23364

TITLE: TYPICAL DETAILS

JOB: TOWN OF JEROME WASTEWATER TREATMENT PLANT — YAVAPAI AZ

ISSUED FOR BID

PREPARED BY:
PACE
Advanced Water Engineering
8723 E. VIA DE COMMERCIO, 1ST FLOOR, SCOTTSDALE, CA 85258
P: (480) 991-3595 | W: www.pacewater.com
TAYLOR B. PIERCE — R.C.E. 70097 — DATE

SHEET
S1.5
56 OF 99 SHEETS

JOB NO. 23364

THESE DRAWINGS ARE THE PROPERTY OF P.A.C.E. AND SHALL NOT BE REPRODUCED IN ANY MANNER NOR BE USED FOR CONSTRUCTION UNLESS STAMPED "ISSUED FOR CONSTRUCTION".

FOR GENERAL PRICING INFORMATION ONLY, COMPLETE DESIGN AND SHOP DRAWINGS TO BE SUPPLIED AND SUBMITTED BY STUD SUPPLIER

PK ASSOCIATES, LLC
6900 E. Belleview Ave. #200
Greenwood Village, Colorado 80111
Phone: (720) 799-1058
Email: cadd@pkastructural.com
Website: www.pkastructural.com

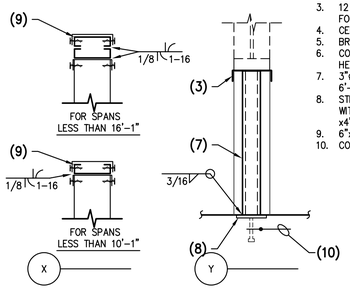

NOTES:
1. STEEL STUD.
2. STEEL HEADER PER SCHEDULE.
3. 12 GAGE STEEL STUD TRACK FOR SPANS LESS THAN 16'-1".
4. CEILING LINE.
5. BRACES PER DETAIL.
6. CONT. SPANDREL OPENING HEADER.
7. 3"ø. STEEL PIPE AT 6'-0" O.C.
8. STEEL PLATE 1/2"x5"x10" WITH 2- 1/2"ø HEADED STUDS x4" LONG AT 8" O.C.
9. 6"x16 GAGE (600 S200).
10. CONT. 1 #5 AT H.S.

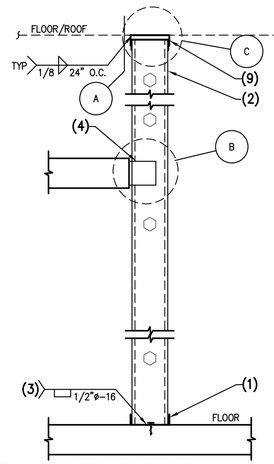

CF3 TYPICAL STEEL STUD ATTACHMENT

NO SCALE

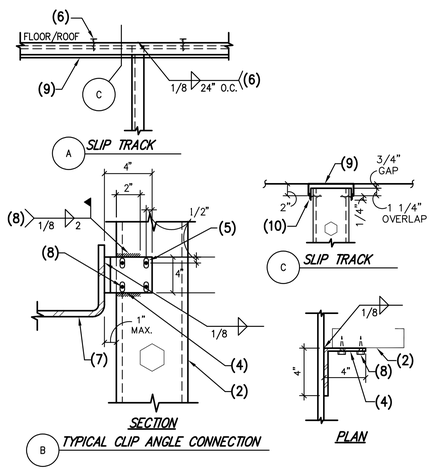

NOTES:
1. CONT. 16 GAGE "UNPUNCHED" STEEL TRACK. FOR ATTACHMENT SEE DETAIL 40.
2. STEEL STUD WALL.
3. USE 1/2"ø PUDDLE WELD AT 16" O.C. WHERE TRACK IS INSTALLED ON STEEL DECK (ROOF CONDITIONS).
4. STEEL CLIP ANGLE 4"x4"x12 GA. x 4" LONG AT EACH STUD.
5. PROVIDE 1" VERT. SLOTTED HOLE WHERE STUDS ARE FULL FLOOR HEIGHT.
6. HILTI SHOT PIN TO BOTTOM OF CONCRETE SLAB.
7. STEEL MEMBER (BENT PLATE AND BEAM FLANGE SHOWN OR CONTINUOUS EDGE ANGLE AT CONCRETE SLAB).
8. ALTERNATE TO WELD AT STUD TO CLIP ANGLE CONNECTION – 4 – #10 x 3/4" LONG SELF– TAPPING TEK SCREWS.
9. DEFLECTION TRACK TO ALLOW VERTICAL MOVEMENT – USE (2)– 16 GA. TRACKS BOTTOM TRACKS TO HAVE 2" LEGS. (ALLOW 3/4" DEFLECTION).
10. #10 x 3/4" LONG SELF–TAPPING SCREW EACH SIDE.

COLD FORMED STRUCTURAL STEEL FRAMING:

ALL COLD–FORMED STEEL FRAMING SHALL BE DESIGNED, FABRICATED AND ERECTED IN ACCORDANCE WITH MANUFACTURER'S RECOMMENDATIONS AND IN ACCORDANCE WITH THE LATEST EDITION OF "SPECIFICATIONS FOR THE DESIGN OF COLD–FORMED STEEL STRUCTURAL MEMBERS" BY THE AMERICAN IRON AND STEEL INSTITUTE.

STEEL FOR 14 AND 16 GAGE STUDS AND JOISTS, AND FOR ALL DIAGONAL TENSION STRAPS SHALL HAVE A MINIMUM YIELD STRENGTH OF 50 KSI. STEEL FOR ALL 18 AND 20 GAGE STUDS AND JOISTS, AND FOR ALL GAGES OF TRACK, ACCESSORIES AND BRIDGING SHALL HAVE A MINIMUM YIELD STRENGTH OF 33 KSI. STEEL SHALL BE GALVANIZED AT LOCATIONS EXPOSED TO WEATHER AND WHEREVER NOTED.

ALL STUD FRAMING (BOTH INTERIOR AND EXTERIOR) SHALL BE DESIGNED AND CONSTRUCTED TO ACCOMMODATE VERTICAL DEFLECTION OF THE STRUCTURE OF UP TO 1/2" LIVE LOAD DEFLECTION, UNLESS GREATER VALUE IS NOTED ON PLANS OR DETAILS. UTILIZE SLIP TRACK OR OTHER SIMILAR MEANS.

ALL STUDS SHALL BE SECURELY SEATED FOR FULL END BEARING ON TOP AND BOTTOM TRACK. UNLESS NOTED OTHERWISE, PROVIDE DOUBLE STUDS AT ALL JAMBS, CORNERS, INTERSECTIONS, BEAM BEARINGS AND JOIST BEARINGS. BRIDGING SHALL BE INSTALLED PER MANUFACTURER'S RECOMMENDATION WITH THE FOLLOWING MINIMUM REQUIREMENTS.

FOR WALLS WITH NO AXIAL LOAD, PROVIDE BRIDGING AT MID–HEIGHT FOR WALLS LESS THAN OR EQUAL TO 10'–0" HIGH, AND 5'–0" O.C. MAXIMUM FOR WALLS GREATER THAN 10'–0" HIGH. FOR AXIAL LOAD BEARING WALLS, PROVIDE BRIDGING EQUALLY SPACED AT 4'–0" MAXIMUM. IN ADDITION, BRIDGING SHALL BE PROVIDED AT ROOF LINES AND ELSEWHERE AS NOTED ON THE DRAWINGS. SOLID BLOCKING SHALL BE INSTALLED IN LIEU OF BRIDGING WHERE NOTED ON THE DRAWINGS.

STEEL STUD DETAILS AND GAGES DEPICATED ON STRUCTURAL DRAWINGS SHOW GENERAL STRUCTURAL REQUIREMENTS AND ARE FOR SCHEMATICS PURPOSE ONLY. THE CONTRACTOR SHALL BE REQUIRED TO SUBMIT SHOP DRAWINGS WITH DESIGN CALCULATIONS SEALED BY A REGISTERED ENGINEER FOR ALL STEEL STUD FRAMING AND ANY ADDITIONAL FRAMING MATERIALS REQUIRED FOR COMPLETE DESIGN SHALL BE INCORPORATED. CALCULATIONS SHALL INCLUDE DERIVATION OF WND LOADS PER SPECIFIED BUILDING CODE.

ALL WELDING SHALL BE PERFORMED BY WELDERS EXPERIENCED IN LIGHT GAGE STRUCTURAL STEEL FRAMING WORK. DO NOT NOTCH FLANGES OF JOISTS OR STUDS. DOUBLE UP FLOOR JOISTS AND BLOCKING UNDER PARTITIONS. PROVIDE BLOCKING AT SUPPORTS OF ALL JOISTS. DOUBLE UP STUDS AT JAMBS AND AS REQUIRED UNDER BEAMS IN BEARING WALLS.

TYPICAL STUDS SHALL BE DESIGNED FOR L/360 EXCEPT STUDS SUPPORTING VENEER SHALL BE DESIGN FOR MAXIMUM DEFLECTION OF L/600.

STEEL STUD SUPPLIER SHALL DESIGN AND SUPPLY STRUCTURAL STEEL AS REQUIRED FOR COMPLETE CONSTRUCTION OF VERTICAL WALL AWNINGS, SOFFITS, WING PLATES, FASCIA EXTENSIONS, ETC. ANY "RED METAL" OF FABRICATED STRUCTURAL STEEL REQUIRED TO COMPLETE WALL SYSTEMS SHALL BE DESIGNED AND INSTALLED BY STEEL STUD SUPPLIER.

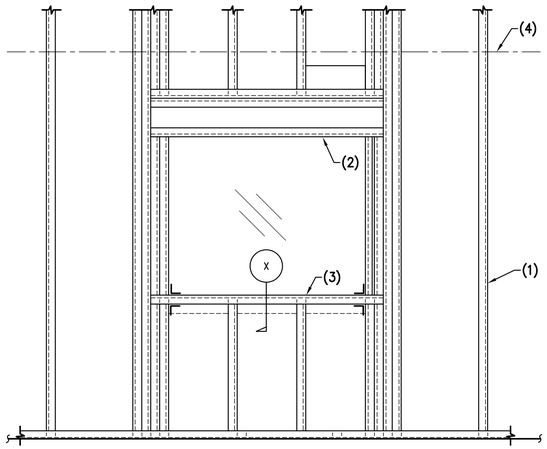

TYPICAL PUNCHED OPENING IN STUD WALL

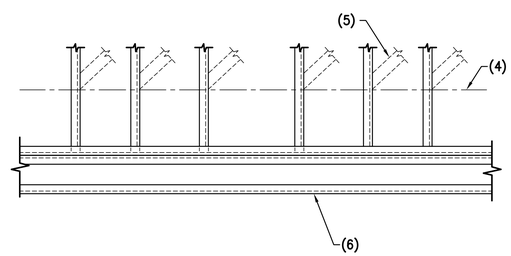

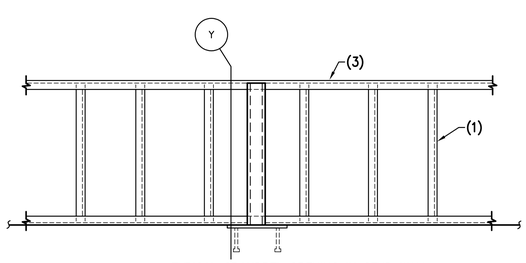

TYPICAL SPANDREL OPENING IN STUD WALL

CF7 TYPICAL OPENINGS IN STEEL STUD WALL

NO SCALE

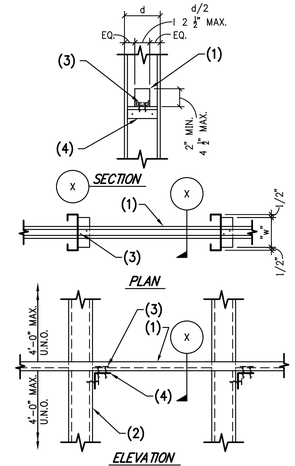

NOTES:
1. 1 1/2"x16GA.x 1/2" FLANGE CRC CONTINUOUS.
2. STUDS PER PLAN.
3. 2– #10 TEK SCREWS AT EACH STUD.
4. SIMPSON 'MSUBH3.25' CLIP WITH 2– #10 TEK SCREWS TO STUDS. ALT: L2x2x16GA.x 0'–5" LONG CLIP.

NOTE:
– 3– CRC BRIDGING PER FLOOR SEE TYPICAL DETAIL 56.
– AT LOCATIONS WHERE CRC IS INTERRUPTED SEE TYPICAL DETAIL 57.
– FOR TYPICAL NON–STRUCTURAL WALL BRIDGING SEE TYPICAL DETAIL 64.

CF6 TYPICAL BRIDGING DETAIL

NO SCALE

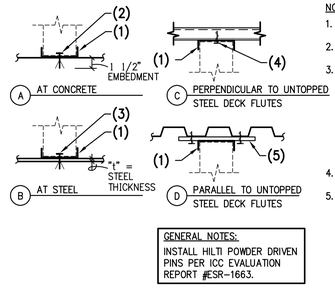

GENERAL NOTES:
INSTALL HILTI POWDER DRIVEN PINS PER ICC EVALUATION REPORT #ESR–1663.

NOTES:
1. STEEL TRACK. DEFLECTION TRACK AS OCCURS.
2. 3/8"ø SIMPSON DROP IN ANCHOR PER SCHEDULE.
3. 0.145ø HILTI X–EDNI POWDER DRIVEN PINS PER SCHEDULE. FOR "t"<1/2", FASTENERS MUST PENETRATE THRU STEEL BASE MATERIAL. FOR "t"=1/2", FASTENERS MUST PENETRATE 9/16" MIN. FOR "t">3/4", FASTENERS MUST PENETRATE 7/16" MIN.
4. #10x3/4" LONG TEKS SCREW PER SCHEDULE.
5. 12"x12x20 GAGE STEEL PLATE WITH 4 #10x 3/4" LONG TEKS SCREWS (ONE EACH CORNER). PLATE SPACING PER SCHEDULE.

TYPICAL TRACK ATTACHMENT

KEY	TYPE A	TYPE B	TYPE C	TYPE D
	ANCHOR SPACING	PIN SPACING	SCREW SPACING	PLATE SPACING
EXTERIOR	12" O.C.	12" O.C.	2 ROWS AT 6" O.C. (4" O.C. ROW SPACING)	12" O.C. (CONT. 12" WIDE PLATE)
INTERIOR	24" O.C.	16" O.C.	12" O.C.	48" O.C.

CF4 TYPICAL STEEL TRACK AT STRUCTURE

NO SCALE

MIN. STEEL STUD PROPERTIES GROSS

SIZE	GAGE	DESIGNATION	Sx(IN^3)	Ix(IN^4)	Fy (KSI)	SPACING	REMARKS L/360	REMARKS L/600
EXTERIOR								
8"	12	800S200–97	2.801	11.203	50	16" O.C.	27'–7"	23'–3"
8"	16	800S200–68	2.035	8.140	50	16" O.C.	24'–10"	20'–11"
6"	12	600S200–97	1.871	5.612	50	16" O.C.	21'–11"	18'–6"
6"	16	600S200–54	1.106	3.319	50	16" O.C.	18'–5"	15'–6"
6"	18	600S162–43	0.767	2.316	33	16" O.C.	16'–4"	13'–9"
6"	20	600S162–33	0.577	1.793	33	16" O.C.	13'–9"	12'–8"
INTERIOR								
6"	20–STRUCTURAL	600S162–33	0.598	1.793	33	16" O.C.	24'–0"	22'–0"
6"	20–STRUCTURAL	600S125–33	0.470	1.479	33	16" O.C.	22'–0"	20'–0"
ALL TRACKS SHALL BE SAME GAGE AS STUDS (18 GAGE MIN) W/ 2" FLANGE								

CF1 MINIMUM STEEL STUD PROPERTIES

NO SCALE

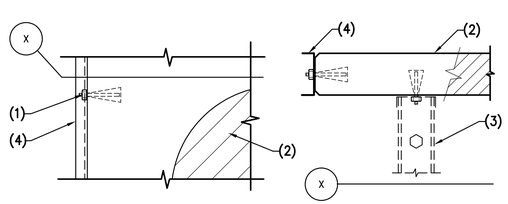

NOTES:
1. 1/2"ø EXP. BOLTS AT 24" O.C. DO NOT CUT VERTICAL REINFORCING.
2. CONCRETE OR MASONRY WALL.
3. LINE OF STEEL STUD WALL AS OCCURS.
4. STEEL STUDS.

CF5 TYPICAL STEEL STUD AT CONCRETE OR MASONRY WALL

NO SCALE

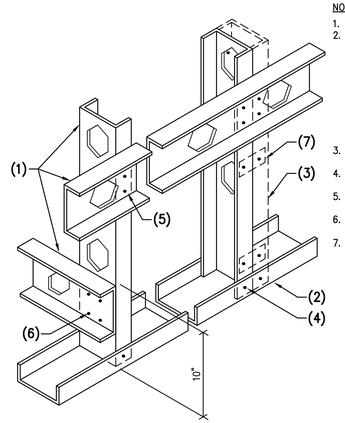

NOTES:
1. STEEL STUD.
2. UNPUNCHED STEEL STUD TRACK – ATTACHMENT REQUIRED 1 HILTI 3/4" LONG X–U TYPE POWDER DRIVEN PINS @ 8" O.C. (I.C.C. #ERS–1663) OR APPROVED EQUAL FOR ALL STUDS 6" OR SMALLER. FOR 8" STUDS USE 2 PINS AT 8: O.C. – TYP. U.N.O.
3. MULTIPLE STUDS WHERE SHOWN ON PLAN OR DETAILS.
4. #10x3/4" LONG TEKS SCREWS EACH SIDE.
5. 2 #10x3/4" LONG TEKS SCREWS.
6. 4 #10x3/4" LONG TEKS SCREWS.
7. 2"x20 GAGE FLAT STRAP BOTH SIDES AT 24" O.C. WITH 1 #10 SCREW AT EACH VERTICAL STUD.

CF2 TYPICAL STEEL STUD WALL – SCREW CONNECTION

NO SCALE

THESE DRAWINGS ARE THE PROPERTY OF P.A.C.E. AND SHALL NOT BE REPRODUCED IN ANY MANNER NOR BE USED FOR CONSTRUCTION UNLESS STAMPED "ISSUED FOR CONSTRUCTION".

NO	BY	DATE	REVISIONS	DATE	APP.

Registered Professional Engineer (Civil)
CERTIFICATE NO.
70374
JAMES APPLEYARD
10/31/25
Date Signed
ARIZONA, U.S.A.

PREPARED BY: PKA
DESIGNED BY: JA
DRAWN BY: NS
CHECKED BY: JA
SCALE: AS NOTED
DATE: SEP 2025
JOB NO. 23364

TITLE: TYPICAL DETAILS

JOB: TOWN OF JEROME WASTEWATER TREATMENT PLANT AZ YAVAPAI

ISSUED FOR BID

PREPARED BY:
PACE
Advanced Water Engineering
8723 E. VIA de COMMERCIO #A-1, SCOTTSDALE, CA 85258
P: (480) 991-3595 | www.pacewater.com
TAYLOR B. PIERCE R.C.E 70097 DATE

SHEET S1.6
57 OF 99 SHEETS

JOB NO. 23364

FOR GENERAL PRICING INFORMATION ONLY, COMPLETE DESIGN AND SHOP DRAWINGS TO BE SUPPLIED AND SUBMITTED BY STUD SUPPLIER

PK ASSOCIATES, LLC
6900 E. Belleview Ave. #200
Greenwood Village, Colorado 80111
Phone: (720) 799-1058
Email: cadd@pkastructural.com
Website: www.pkastructural.com

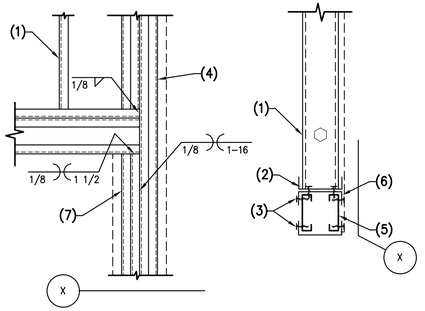

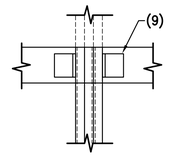

AT TOP OF STUD

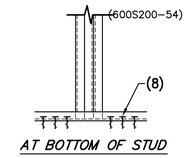

AT BOTTOM OF STUD

NOTES:

1. STEEL STUD WALL.
2. CONT. 16 GAGE TRACK W/ 2 – #12 TEK SCREWS AT 12" O.C. STAGGERED THROUGH TRACKS TO STUDS BELOW.
3. #12 TEK SCREWS AT 12" O.C., EACH LEG OF TRACK.
4. 2 (FULL HEIGHT) JAMB STUDS MIN. REFER TO SCHEDULE BELOW FOR ADDITIONAL STUDS WHERE REQUIRED.
5. STEEL HEADER PER SCHEDULE.
6. CONT. STEEL TRACK – TOP AND BOTTOM. REFER TO SCHEDULE FOR HEAVIER GAGE WHERE REQUIRED.
7. DOUBLE TRIMMER STUD, 16 GA. MIN. (ADD ONE ADDITIONAL STUDS AT EVERY 4'–0" OPENING. INCREASE AFTER 6'–0" WIDE).
8. TYPICAL PINS OR SCREWS AT 2" O.C. EACH SIDE FOR EVERY STUD IN THE GROUP.
9. TYPICAL CLIP ANGLE, ONE FOR EVERY TWO STUDS.

NOTE:

– FOR OPENING LARGER THAN SHOWN – SEE FRAMING PLAN
– ALL HEADER'S STUDS AND TRACKS SHALL BE UNPUNCHED MEMBERS.

OPENING	EXTERIOR WALLS		INTERIOR WALLS			
	HEADER SIZE (6" WALL)	JAMB STUDS (6" WALL)	HEADER SIZE		JAMB STUDS	
			4" WALL	6" WALL	4" WALL	6" WALL
0" – 4'–0"	2– 6"x20 GA (600S137–33) STUDS AND 2– 6"x18 GA (600T125–43) TRACKS	2– 6"x16 GA (600S200–54)	2– 6"x20 GA (600S137–33) STUDS AND 2– 4"x18 GA (400T125–43) TRACKS	2– 6"x20 GA (600S137–33) STUDS AND 2– 6"x18 GA (600T125–43) TRACKS	2– 4"x20 GA (400S137–33)	2– 6"x20 GA (600S137–33)
4'–1" – 6'–0"	2– 6"x20 GA (600S137–33) STUDS AND 2– 6"x18 GA (600T125–43) TRACKS	2– 6"x16 GA (600S200–54)	2– 6"x20 GA (600S137–33) STUDS AND 2– 4"x18 GA (400T125–43) TRACKS	2– 6"x20 GA (600S137–33) STUDS AND 2– 6"x18 GA (600T125–43) TRACKS	2– 4"x20 GA (400S137–33)	2– 6"x20 GA (600S137–33)
6'–1" – 8'–0"	2– 6"x18 GA (600S162–43) STUDS AND 2– 6"x18 GA (600T125–43) TRACKS	2– 6"x16 GA (600S200–54)	2– 6"x20 GA (600S137–33) STUDS AND 2– 4"x18 GA (400T125–43) TRACKS	2– 6"x20 GA (600S137–33) STUDS AND 2– 6"x18 GA (600T125–43) TRACKS	2– 4"x20 GA (400S137–33)	2– 6"x20 GA (600S137–33)
8'–1" – 10'–0"	2– 6"x16 GA (600S200–54) STUDS AND 2– 6"x18 GA (600T125–43) TRACKS	3– 6"x16 GA (600S200–54)	2– 6"x20 GA (600S137–33) STUDS AND 2– 4"x18 GA (400T125–43) TRACKS	2– 6"x20 GA (600S137–33) STUDS AND 2– 6"x18 GA (600T125–43) TRACKS	2– 4"x20 GA (400S137–33)	2– 6"x20 GA (600S137–33)
10'–1" – 12'–0"	3– 6"x16 GA (600S250–54) STUDS AND 2– 6"x16 GA (600T200–54) TRACKS	3– 6"x16 GA (600S200–54)	3– 6"x20 GA (600S137–33) STUDS AND 2– 4"x16 GA (400T150–54) TRACKS	3– 6"x20 GA (600S137–33) STUDS AND 2– 6"x18 GA (600T125–43) TRACKS	2– 4"x20 GA (400S137–33)	2– 6"x20 GA (600S137–33)
12'–1" – 14'–0"	3– 8"x16 GA (800S250–54) STUDS AND 2– 6"x14 GA (600T200–68) TRACKS	4– 6"x16 GA (600S200–54)	3– 8"x20 GA (800S137–33) STUDS AND 2– 4"x16 GA (400T200–54) TRACKS	3– 8"x20 GA (800S137–33) STUDS AND 2– 6"x18 GA (600T125–43) TRACKS	2– 4"x20 GA (400S137–33)	2– 6"x20 GA (600S137–33)
14'–1" – 16'–0"	3– 8"x14 GA (800S200–68) STUDS AND 3– 6"x14 GA (600T200–68) TRACKS	5– 6"x16 GA (600S200–54)	3– 8"x18 GA (800S137–43) STUDS AND 3– 4"x16 GA (400T200–54) TRACKS	3– 8"x18 GA (800S137–43) STUDS AND 2– 6"x18 GA (600T125–43) TRACKS	2– 4"x20 GA (400S162–33)	2– 6"x20 GA (600S137–33)
CONTINUOUS SPANDREL OPENING	2– 6"x18 GA (600S162–43) STUDS AND 2– 6"x18 GA (600T125–43) TRACKS	N/A USE BRACE PER DETAIL	2– 6"x20 GA (600S137–33) STUDS AND 2– 4"x18 GA (400T125–43) TRACKS	2– 6"x20 GA (600S137–33) STUDS AND 2– 6"x18 GA (600T125–43) TRACKS	N/A USE BRACE PER DETAIL	N/A USE BRACE PER DETAIL
DESIGN HEIGHT IS 16'–0" OR LESS, IF GREATER HEIGHT REQUIRED USE BRACES ACROSS OPENING. VERIFY BRACES ARE ABOVE CEILING LINE.						

CF6 *HEADER IN NON–BEARING STEEL STUD WALL*

NO SCALE

NO	BY	DATE	REVISIONS	DATE	APP.

Registered Professional Engineer (Civil) CERTIFICATE NO. 70374 JAMES APPLEYARD 10/31/25 Date Signed ARIZONA, U.S.A.

PREPARED BY: PKA
DESIGNED BY: JA
DRAWN BY: NS
CHECKED BY: JA
SCALE: AS NOTED
DATE: SEP 2025
JOB NO.: 23364

THESE DRAWINGS ARE THE PROPERTY OF P.A.C.E. AND SHALL NOT BE REPRODUCED IN ANY MANNER NOR BE USED FOR CONSTRUCTION UNLESS STAMPED "ISSUED FOR CONSTRUCTION".

TITLE: TYPICAL DETAILS

JOB: TOWN OF JEROME
WASTEWATER
TREATMENT PLANT
YAVAPAI AZ

ISSUED FOR BID

PREPARED BY:
PACE
Advanced Water Engineering
8723 E. Via de Ventura Suite 260 | SCOTTSDALE, CA 85258
P: (480) 991-3995 | www.paceadvisor.com
TAYLOR B. PIERCE R.C.E 70097 DATE

SHEET
S1.7
58 OF 99 SHEETS

JOB NO. 23364

PK ASSOCIATES, LLC
6900 E. Belleview Ave. #200
Greenwood Village, Colorado 80111
Phone: (720) 799-1058
Email: cadd@pkastructural.com
Website: www.pkastructural.com

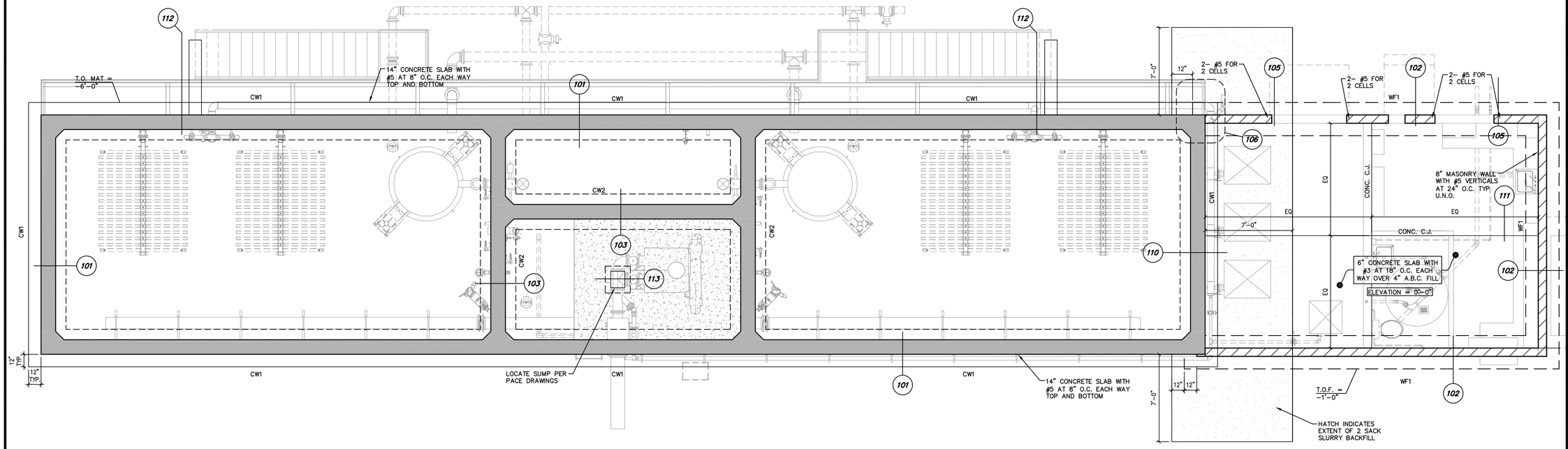

1 FOUNDATION PLAN

SCALE: 1/4"=1'-0"

CONCRETE WALL (CW) SCHEDULE

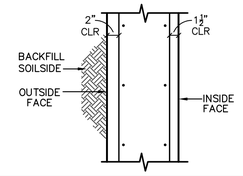

MARK	t	VERTICAL REINF.		HORIZONTAL REINF.		REMARKS
		INSIDE FACE	OUTSIDE FACE	INSIDE FACE	OUTSIDE FACE	
CW1	14"	#9 AT 6" O.C.	#5 AT 8" O.C.	#5 AT 8" O.C.	#5 AT 8" O.C.	TYP. U.N.O.
CW2	14"	#9 AT 6" O.C.	#9 AT 6" O.C.	#5 AT 8" O.C.	#5 AT 8" O.C.	TYP. U.N.O.

*NOTE: AT BOTTOM OF ALL WALLS PROVIDE SPECIAL HORIZONTAL REINFORCING AND U-BARS AT SHOWN IN DETAILS 119 AND 120 -TYPICAL

CONTINUOUS FOOTING (WF) SCHEDULE

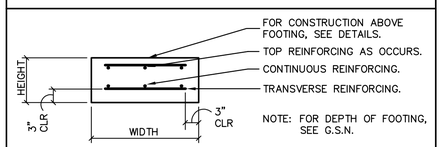

MARK	DIMENSIONS		FOOTING REINFORCING	REMARKS
	HEIGHT	WIDTH		
WF1	12"	2'-6"	3- #5 CONTINUOUS	---

ISSUED FOR BID

PREPARED BY: PACE
Advanced Water Engineering
8723 E. Via de Commercio Suite 1 SCOTTSDALE, CA 85258
P: (480) 991-3595 | www.pacewater.com
TAYLOR B. PIERCE R.C.E 70097 DATE

NO	BY	DATE	REVISIONS	DATE	APP.

Registered Professional Engineer CERTIFICATE NO. 70374 JAMES APPLEYARD 10/31/25 Date Signed ARIZONA, U.S.A.

PREPARED BY:	PKA
DESIGNED BY:	JA
DRAWN BY:	NS
CHECKED BY:	JA
SCALE:	AS NOTED
DATE	SEP 2025
JOB NO.	23364

THESE DRAWINGS ARE THE PROPERTY OF P.A.C.E. AND SHALL NOT BE REPRODUCED IN ANY MANNER NOR BE USED FOR CONSTRUCTION UNLESS STAMPED "ISSUED FOR CONSTRUCTION".

TITLE: FOUNDATION PLAN

JOB: TOWN OF JEROME WASTEWATER TREATMENT PLANT YAVAPAI AZ

SHEET S2.00
59 OF 99 SHEETS

JOB NO. 23364

PK ASSOCIATES, LLC
6900 E. Belleview Ave. #200
Greenwood Village, Colorado 80111
Phone: (720) 799-1058
Email: cadd@pkastructural.com
Website: www.pkastructural.com

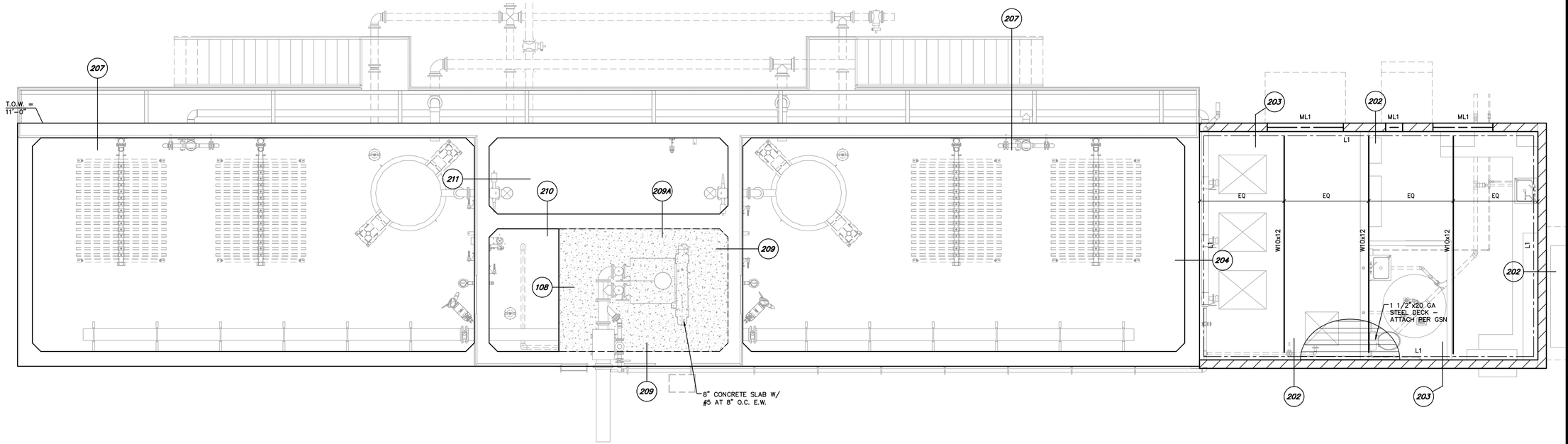

1 FRAMING PLAN

SCALE: 1/4"=1'-0"

LEDGER (L) SCHEDULE

STEEL: 1. ALL LEDGERS SHALL HAVE MINIMUM OF 2 WELD PLATES OR ANCHOR BOLTS AS NOTED BELOW.
2. WELD PLATES OR ANCHOR BOLTS SHALL BE LOCATED NOT LESS THAN 6" NOR MORE THAN 1'-4" FROM END OF LEDGER OR LEDGER SPLICE.

MARK	SIZE / TYPE	CONNECTION
L1	L4x4x1/4"	EMBED PER DETAIL 202 AND 204 AT 48" O.C.

MASONRY LINTEL (ML) SCHEDULE

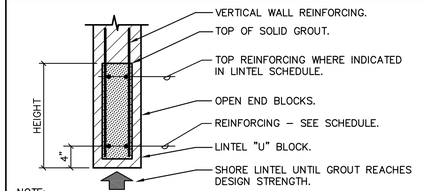

NOTE:
1. VERTICAL REINFORCING TO MATCH AND LAP WALL REINFORCING PER G.S.N.
2. EXTEND GROUT, OPEN END MASONRY UNITS AND REINFORCING 2'-0" PAST EACH JAMB. USE CORNER BARS WHERE 2'-0" CANNOT BE ACHIEVED.

MARK	HEIGHT	REINFORCING	REMARKS
ML1	16"	2- #5 BOTTOM	---

NO	BY	DATE	REVISIONS	DATE	APP.

Registered Professional Engineer (Civil) CERTIFICATE NO. 70374 JAMES APPLEYARD Date Signed 10/31/25 ARIZONA, U.S.A.

PREPARED BY: PKA
DESIGNED BY: JA
DRAWN BY: NS
CHECKED BY: JA
SCALE: AS NOTED
DATE: SEP 2025
JOB NO.: 23364

THESE DRAWINGS ARE THE PROPERTY OF P.A.C.E. AND SHALL NOT BE REPRODUCED IN ANY MANNER NOR BE USED FOR CONSTRUCTION UNLESS STAMPED "ISSUED FOR CONSTRUCTION".

TITLE: FRAMING PLAN

JOB: TOWN OF JEROME WASTEWATER TREATMENT PLANT YAVAPAI AZ

ISSUED FOR BID

PREPARED BY:
PACE
Advanced Water Engineering
8723 E. VIA de VENTURA, SUITE 290 | SCOTTSDALE, CA 85258
P: (480) 991-3595 | www.paceadvisor.com
TAYLOR B. PIERCE R.C.E 70097 DATE

SHEET S2.01
60 OF 99 SHEETS

JOB NO. 23364

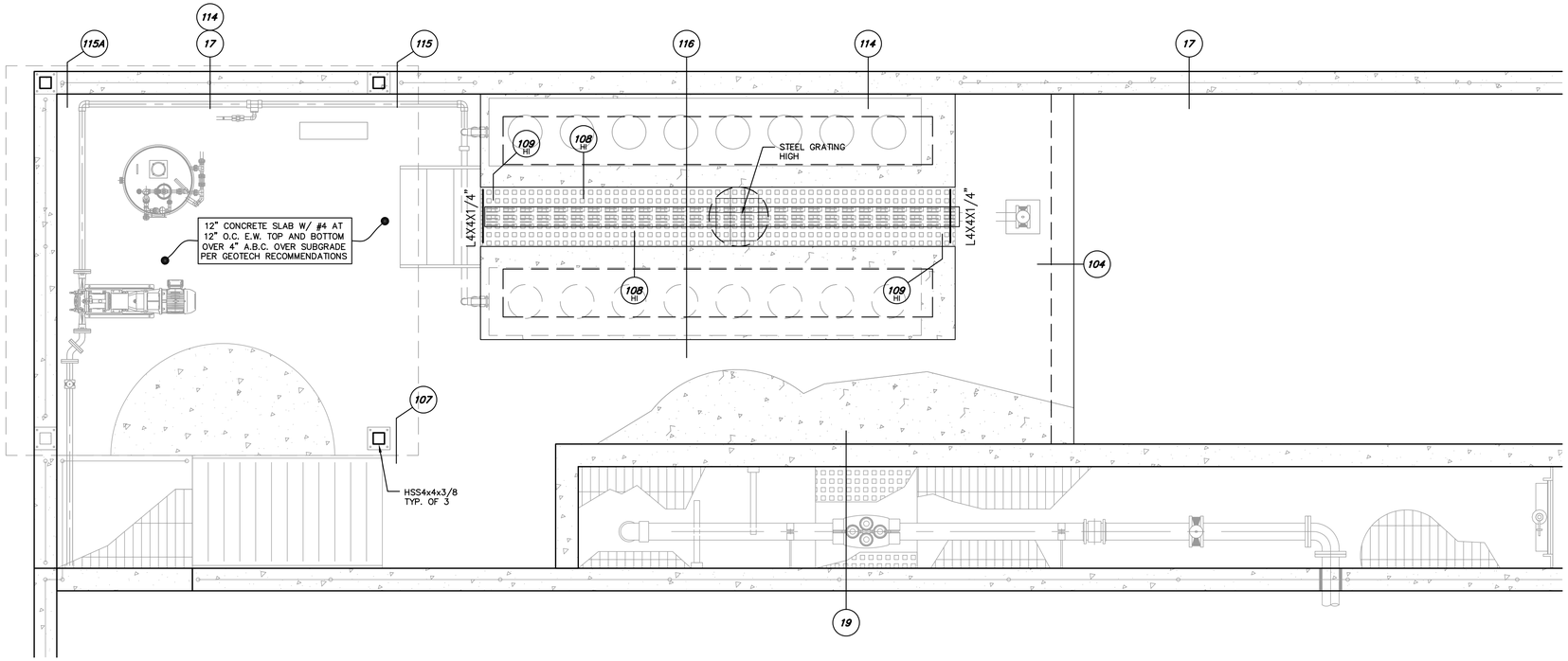

1 PLAN - DEWATERING PAD

SCALE: 1/2"=1'-0"

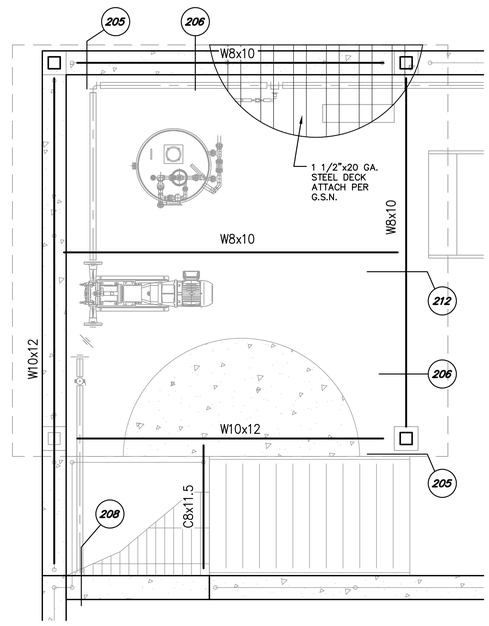

2 SHADE STRUCTURE - FRAMING PLAN

SCALE: 1/2"=1'-0"

PK ASSOCIATES, LLC
6900 E. Belleview Ave. #200
Greenwood Village, Colorado 80111
Phone: (720) 799-1058
Email: cadd@pkastructural.com
Website: www.pkastructural.com

NO	BY	DATE	REVISIONS	DATE	APP.

Registered Professional Engineer (Civil)
CERTIFICATE NO.
70374
JAMES APPLEYARD
Date Signed 10/31/25
ARIZONA, U.S.A.

PREPARED BY: PKA
DESIGNED BY: JA
DRAWN BY: NS
CHECKED BY: JA
SCALE: AS NOTED
DATE: SEP 2025
JOB NO. 23364

THESE DRAWINGS ARE THE PROPERTY OF P.A.C.E. AND SHALL NOT BE REPRODUCED IN ANY MANNER NOR BE USED FOR CONSTRUCTION UNLESS STAMPED 'ISSUED FOR CONSTRUCTION'.

TITLE
FRAMING PLAN

JOB
TOWN OF JEROME
WASTEWATER
TREATMENT PLANT
YAVAPAI AZ

ISSUED FOR BID

PREPARED BY:
PACE
Advanced Water Engineering
8723 E. VIA DE COMERCIO, STE A, SCOTTSDALE, CA 85258
P: (480) 991-3595 | W: www.pacewater.com
TAYLOR B. PIERCE R.C.E 70097 DATE

SHEET
S2.10
61 OF 99 SHEETS

JOB NO. 23364

NOTES:
1. CONCRETE SLAB/WALL.
2. CONT. L2x2x1/4" W/ 1/2"ø H.S. AT AT 18" O.C.
3. GRATING AND ATTACHMENT BY OTHERS.

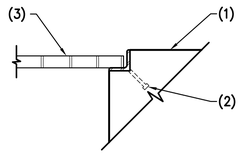

108 GRATING AT CONCRETE SLAB/WALL
NO SCALE

NOTES:
1. MASONRY WALL BEYOND.
2. CONCRETE SLAB WHERE OCCURS.
3. FINISHED GRADE.
4. SOLID GROUTED MASONRY STEM WALL AND CONCRETE FOOTING WITH REINFORCING CONTINUOUS FROM BEYOND.
5. CONCRETE SLAB ON GRADE, TOOLED EDGE AT OPENING.
6. DEPRESS STEM WALL 8" MIN.
7. VARIES – SEE PLANS FOR SIZE AND REINF.

NOTE:
– AT CONTRACTOR'S OPTION, USE CONCRETE STEM WALL W/ SAME REINFORCING.

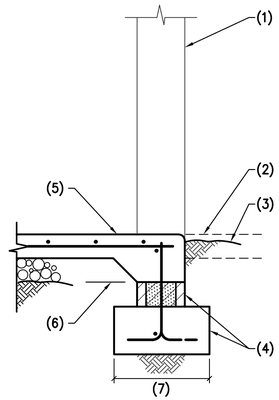

105 EXTERIOR MASONRY WALL FOOTING AT OPENING
NO SCALE

PK ASSOCIATES, LLC
6900 E. Belleview Ave. #200
Greenwood Village, Colorado 80111
Phone: (720) 799-1058
Email: cadd@pkastructural.com
Website: www.pkastructural.com

NOTES:
1. CONCRETE WALL.
2. CONCRETE FOOTING MAT SLAB
3. DOWELS TO MATCH AND LAP VERTICAL WALL REINFORCING.
4 CONCRETE SLAB OR FINISHED GRADE AS OCCURS.
5. CONTINUOUS KEYED JOINT.
6. 6" WATER STOP.
7. #5 BAR CONT. AT HOOK.
8. MIRA DRAIN BY CARLISE COATING AND WATERPROOFING, INC. OR APPROVED EQUAL.

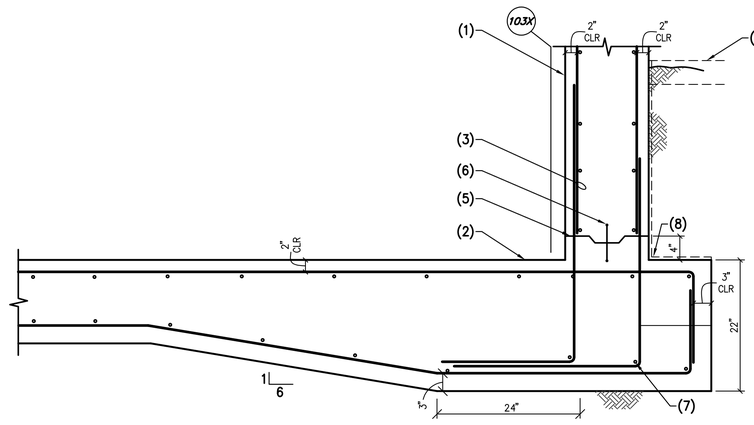

101 CONCRETE WALL AT EDGE OF MAT FOUNDATION
NO SCALE

NOTES:
1. CONCRETE WALL.
2. CONCRETE FOOTING.
3. FOOTING REINFORCING.
4. DOWELS TO MATCH AND LAP FOOTING REINFORCING.
5. 90° HOOK.

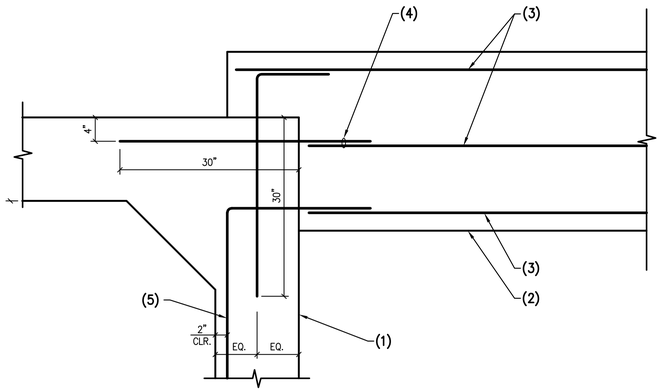

106 PLAN – CONCRETE FOOTING AT CONCRETE WALL
NO SCALE

NOTES:
1. STEEL ANGLE.
2. 1/4" STEEL PLATE.
3. GRATING AND ATTACHMENT BY OTHERS.

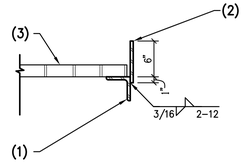

104 GRATING AT STEEL ANGLE
NO SCALE

NOTES:
1. 1 #4 CONTINUOUS.
2. FINISHED GRADE OR CONCRETE SLAB WHERE OCCURS.
3. CONCRETE FOOTING.
4. MASONRY WALL – GROUT SOLID BELOW GRADE.
5. DOWELS TO MATCH AND LAP VERTICAL WALL REINFORCING PER G.S.N. – ALTERNATE BENDS.
6. CONCRETE SLAB.
7. GRADE VARIES AS REQ'D. SOLID GROUT WALL BELOW GRADE.

NOTE:
AT CONTRACTOR'S OPTION, USE CONCRETE STEM WALL W/ SAME REINFORCING.

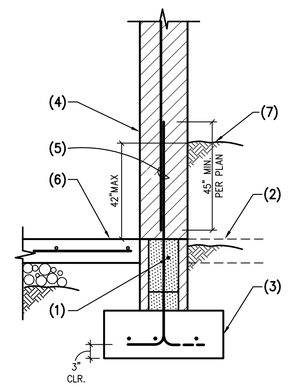

102 EXTERIOR MASONRY WALL FOOTING
NO SCALE

NOTES:
1. CONCRETE SLAB/WALL.
2. CONT. L2x2x1/4" STEEL ANGLE W/ 1/2"ø H.S. AT 4" O.C. AT STEEL ANGLE.
3. 1/2"x6"x6" STEEL PLATE W/ 2– 1/2"ø H.S. AT 4" O.C.
4. STEEL ANGLE.
5. GRATING AND ATTACHMENT BY OTHERS.

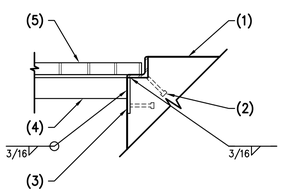

109 STEEL ANGLE AT CONCRETE WALL/SLAB
NO SCALE

NOTES:
1. STEEL COLUMN.
2. 1/2"x10"x10" STEEL PLATE W/ 4– 3/4"ø F1554 GR36 A.B. AT 7" O.C.
3. ±1 1/2" DRYPACK.
4. CONCRETE SLAB.

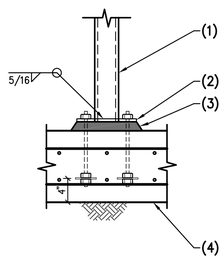

107 STEEL COLUMN AT CONCRETE SLAB
NO SCALE

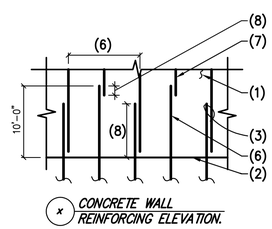

x CONCRETE WALL REINFORCING ELEVATION.

NOTES:
1. CONCRETE WALL.
2. CONCRETE FOOTING.
3. DOWELS TO MATCH AND LAP VERTICAL WALL REINFORCING.
4 #5 BAR CONTINUOUS AT HOOK.
5. CONTINUOUS KEYED JOINT.
6. DOWEL TO MATCH SCHEDULED WALL REINFORCING.
7. EVER OTHER VERTICAL BAR MAY LAP W/ A #5.
8. CLASS "B" TENSION LAP.

103 CONCRETE WALL AT MAT FOUNDATION
NO SCALE

ISSUED FOR BID

PREPARED BY:
PACE
Advanced Water Engineering
8723 E. VIA de VENTURA, SUITE A-200, SCOTTSDALE, CA 85258
P: (480) 991-3985 | www.paceadvisor.com
TAYLOR B. PIERCE R.C.E 70097 DATE

SHEET
S3.1
62 OF 99 SHEETS

JOB NO. 23364

JOB
TOWN OF JEROME
WASTEWATER
TREATMENT PLANT
YAVAPAI AZ

TITLE
FOUNDATION DETAILS

NO	BY	DATE	REVISIONS	DATE	APP.

Registered Professional Engineer (Civil)
CERTIFICATE NO.
70374
JAMES APPLEYARD
10/31/25
Date Signed
ARIZONA, U.S.A.

PREPARED BY:	PKA		
DESIGNED BY:	JA		
DRAWN BY:	NS	SCALE:	AS NOTED
CHECKED BY:	JA		
DATE			SEP 2025
JOB NO.			23364

THESE DRAWINGS ARE THE PROPERTY OF P.A.C.E. AND SHALL NOT BE REPRODUCED IN ANY MANNER NOR BE USED FOR CONSTRUCTION UNLESS STAMPED "ISSUED FOR CONSTRUCTION".

NOTES:
1. CONCRETE SLAB.
2. ALUMINUM GRATING.
3. 6" CONCRETE WALL/ SLAB W/ #4 AT 6"O.C. E.W.
4. WATERSTOP PER PACE DRAWINGS.
5. L3x3x1/4 W/ 1/2"ø HILTI SS KWIK BOLT T2 SCREW ANCHOR, OR APPROVED EQUAL. 2 ANCHORS EACH SIDE AT 9" O.C.

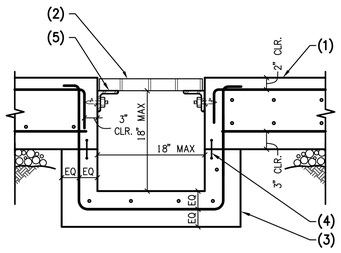

113 *SUMP PIT AT CONCRETE SLAB*

NO SCALE

NOTES:
1. CONCRETE WALL.
2. CONCRETE SLAB.
3. #5x30"x12" AT 12" O.C.
4. CONT. #5 AT BEND.

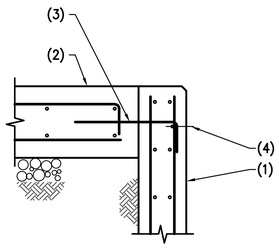

114 *CONCRETE SLAB AT CONCRETE WALL*

NO SCALE

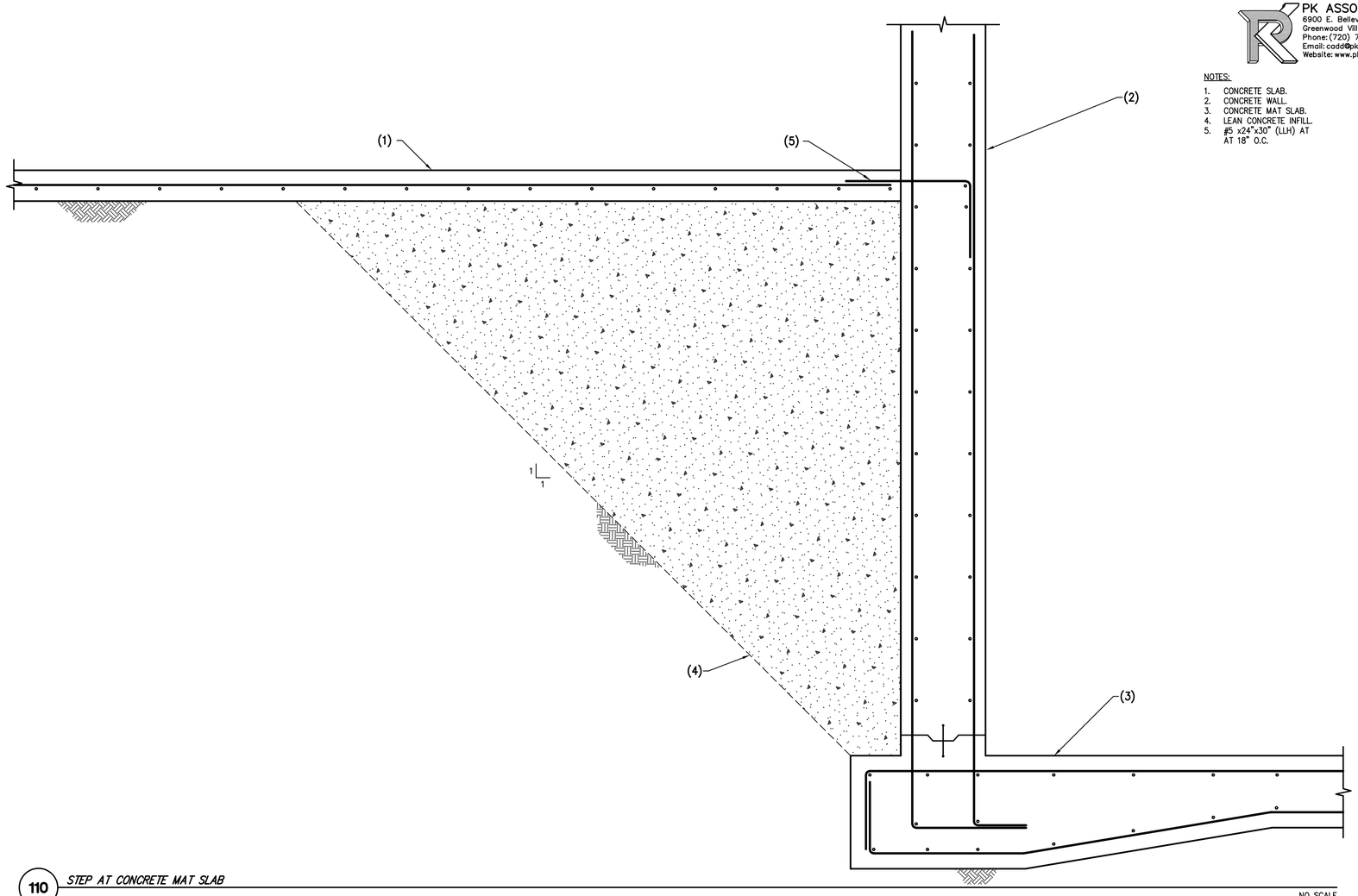

110 *STEP AT CONCRETE MAT SLAB*

NO SCALE

NOTES:
1. CONCRETE WALL.
2. CONCRETE SLAB.
3. #5x30"x12" AT 12" O.C.
4. CONT. #5 AT BEND.
5. STEEL POST.
6. 1/2"x12"x6" STEEL PLATE W/ 2– #5x30" A706 WELDABLE REBAR AT 9" O.C. AND 3/4"ø H.S. CENTERED.
7. 1/2" STEEL PLATE.
8. 2– #5x30" A706 WELDABLE REBAR.
9. 3/4"ø H.S.

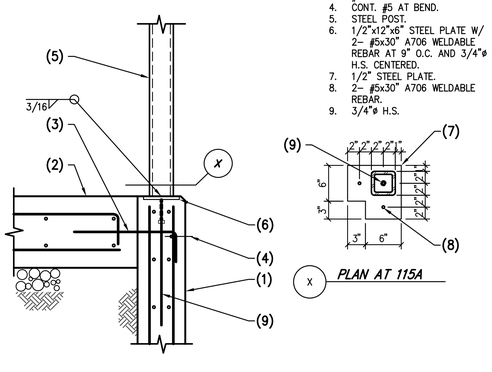

115 *CONCRETE SLAB AT CONCRETE WALL*

115A *AS NOTED*

NO SCALE

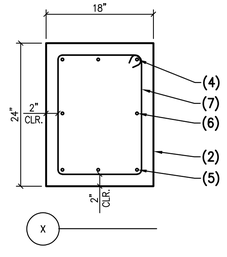

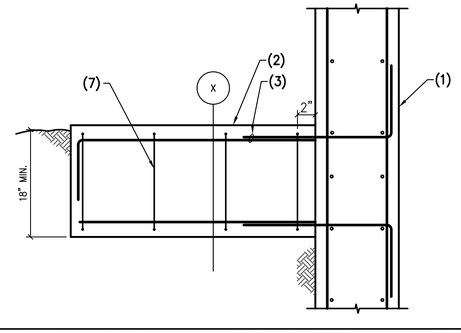

112 *STAIR FOOTING AT CONCRETE WALL*

NO SCALE

NOTES:
1. CONCRETE WALL.
2. STAIR CONCRETE FOOTING.
3. DOWELS TO MATCH AND LAP FOOTING REINFORCING.
4. 4– #6 TOP.
5. 3– #5 BOTTOM.
6. #5 EACH FACE.
7. #4 AT 12" O.C.

NOTES:
1. CONCRETE SLAB ON GRADE.
2. SAWCUT – 1/8" WIDE x 1/4 SLAB THICKNESS IN DEPTH – CUT SHALL BE MADE SOON ENOUGH TO PREVENT SHRINKAGE CRACKING, BUT NOT SO SOON AS TO CAUSE SPALLING OF THE CONCRETE WHILE SAWING. WORK MUST BE ACCOMPLISHED WITHIN 24 HOURS OF CONCRETE PLACEMENT.
3. CONTINUOUS KEY – SEE TYPICAL KEY IN CONCRETE DETAIL.
4. CUT 1/2" REINFORCEMENT ACROSS C.J. DO NOT CUT AT RAMP.

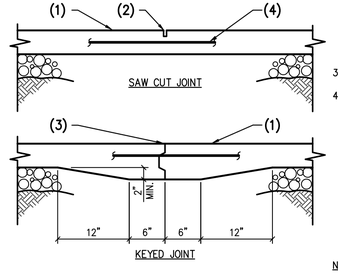

NOTE:
KEYED JOINTS NEED ONLY OCCUR AT EXPOSED EDGES DURING PLACEMENT UNLESS SPECIFICALLY NOTED ON THE PLANS. "TOOL WET JOINT", "ZIP STRIP", ETC. SHALL MATCH SAWCUT REQUIREMENTS.

111 *CONTROL JOINTS IN CONCRETE SLAB ON GRADE*

NO SCALE

NOTES:
1. CONCRETE SLAB.
2. CONCRETE WALL.
3. CONCRETE MAT SLAB.
4. LEAN CONCRETE INFILL.
5. #5 x24"x30" (LLH) AT AT 18" O.C.

PK ASSOCIATES, LLC
6900 E. Belleview Ave. #200
Greenwood Village, Colorado 80111
Phone: (720) 799–1058
Email: cadd@pkastructural.com
Website: www.pkastructural.com

NO	BY	DATE	REVISIONS	DATE	APP.

Registered Professional Engineer (Civil)
CERTIFICATE NO.
70374
JAMES APPLEYARD
Date Signed 10/31/25
ARIZONA, U.S.A.

PREPARED BY: PKA
DESIGNED BY: JA
DRAWN BY: NS
CHECKED BY: JA
SCALE: AS NOTED
DATE: SEP 2025
JOB NO.: 23364

THESE DRAWINGS ARE THE PROPERTY OF P.A.C.E. AND SHALL NOT BE REPRODUCED IN ANY MANNER NOR BE USED FOR CONSTRUCTION UNLESS STAMPED "ISSUED FOR CONSTRUCTION".

TITLE: **FOUNDATION DETAILS**

JOB: TOWN OF JEROME
WASTEWATER
TREATMENT PLANT
YAVAPAI AZ

ISSUED FOR BID

PREPARED BY:
PACE
Advanced Water Engineering
8723 E. VIA DE COMMERCIO, BLDG A, SCOTTSDALE, CA 85258
P: (480) 991-3595 | W: www.pacewater.com
TAYLOR B. PIERCE R.C.E. 70097 DATE

SHEET **S3.2**
63 OF 99 SHEETS

JOB NO. 23364

PK ASSOCIATES, LLC
6900 E. Belleview Ave. #200
Greenwood Village, Colorado 80111
Phone: (720) 799-1058
Email: cadd@pkastructural.com
Website: www.pkastructural.com

NOTES:

1. CONCRETE SLAB.
2. 8" CONCRETE WALL/SLAB W/ #5 AT 12" O.C. EACH WAY.
3. HIGH DENSITY FOAM.
4. GRATING AND ATTACHMENT PER SHEET M5.3.
5. DOWELS TO MATCH AND LAP WALL REINFORCING.
6. 2 CONT. #4.
7. #4x60" AT 12" O.C.
8. EQUIPMENT AND ATTACHMENT BY OTHERS.
9. CONCRETE WALL.

116 SECTION – DEWATERING PLAN

NO SCALE

ISSUED FOR BID

NO	BY	DATE	REVISIONS	DATE	APP.

THESE DRAWINGS ARE THE PROPERTY OF P.A.C.E. AND SHALL NOT BE REPRODUCED IN ANY MANNER NOR BE USED FOR CONSTRUCTION UNLESS STAMPED "ISSUED FOR CONSTRUCTION".

Registered Professional Engineer (Civil)
CERTIFICATE NO.
70374
JAMES APPLEYARD
10/31/25
Date Signed
ARIZONA, U.S.A.

PREPARED BY:	PKA
DESIGNED BY:	JA
DRAWN BY:	NS
CHECKED BY:	JA
DATE	SEP 2025
JOB NO.	23364
SCALE:	AS NOTED

TITLE
FOUNDATION DETAILS

JOB
TOWN OF JEROME
WASTEWATER
TREATMENT PLANT
YAVAPAI AZ

PREPARED BY:
PACE
Advanced Water Engineering
8723 E. VIA DE COMERCIO, STE A-104, SCOTTSDALE, CA 85258
P.: (480) 991-3595 | www.pacewater.com
TAYLOR B. PIERCE R.C.E 70097 DATE

SHEET
S3.3
64 OF 99 SHEETS

JOB NO. 23364

PK ASSOCIATES, LLC
6900 E. Belleview Ave. #200
Greenwood Village, Colorado 80111
Phone: (720) 799-1058
Email: cadd@pkastructural.com
Website: www.pkastructural.com

NOTES:
1. CONCRETE WALL.
2. CONCRETE SLAB.
3. #5x 36" ⌐ 36" AT SPACING TO MATCH SLAB REINFORCING.
4. CONT. BAR AT HOOK.
5. GRATING AT 209A PER DETAIL 108.

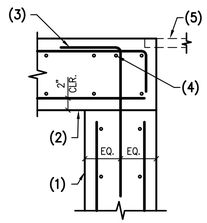

209 CONCRETE WALL AT CONCRETE WALL
209A AS NOTED
NO SCALE

NOTES:
1. STEEL BEAM.
2. STEEL DECK – SEE PLANS FOR DIRECTION.
3. 1/4" CONTINUOUS BENT PLATE.

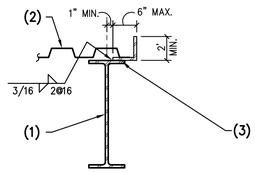

206 STEEL ROOF DECK AT STEEL BEAM
NO SCALE

NOTES:
1. CONCRETE WALL.
2. 1/2"x8"x4" STEEL PLATE W/ 2– 1/2"ø H.S. AT 5" O.C.
3. CONTINUOUS LEDGER ANGLE.
4. STEEL DECK.

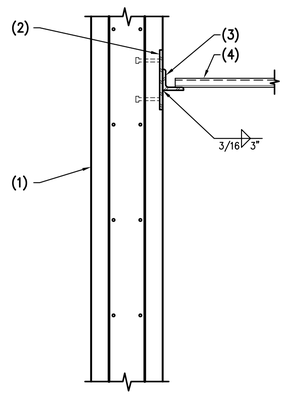

204 LEDGER ANGLE AND STEEL DECK AT CONCRETE WALL
NO SCALE

NOTES:
1. STEEL LEDGER ANGLE – FOR SIZE AND LOCATION, SEE PLAN.
2. STEEL PLATE 1/2"x3"x12" LONG.
3. STEEL PLATE 1/2"x3".

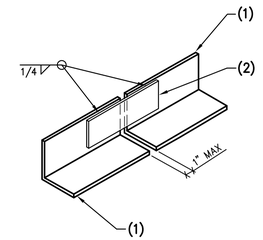

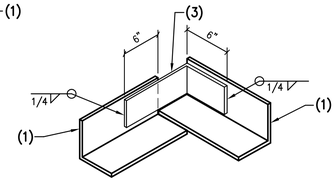

AT CORNERS

201 TYPICAL SPLICE IN CONTINUOUS STEEL LEDGER ANGLE
NO SCALE

NOTES:
1. CONCRETE WALL.
2. CONT. L2x2x1/4" W/ 1/2"ø H.S. AT 18" O.C.
3. GRATING AND ATTACHMENT BY OTHERS.

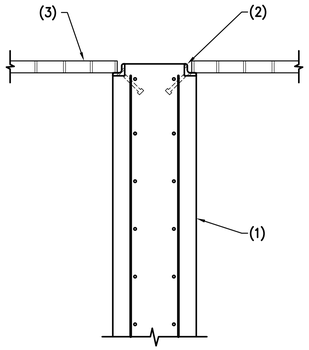

210 STEEL GRATING AT CONCRETE WALL
NO SCALE

NOTES:
1. CONCRETE WALL.
2. C6x8.2 AT 4'–0" O.C. MAX.
3. CONT. L4x4x1/4.
4. CONT. L2x2x1/4" W/ 1/2"ø H.S. AT 18" O.C.
5. GRATING AND ATTACHMENT BY OTHERS.
6. COPE TOP FLANGE.
7. 1/2"x8"x8" STEEL PLATE W/ 2– 3/4"ø H.S. AT 5" O.C.
8. 3– 3/4"ø H.S. AT 4" O.C. CENTERED ON CHANNEL.
9. HANDRAIL POST AND ATTACHMENT BY OTHERS. (4'–0" O.C. MAX).
10. 1/2"x8"x4" STEEL PLATE W/ 2– 3/4"ø H.S. AT 5" O.C.

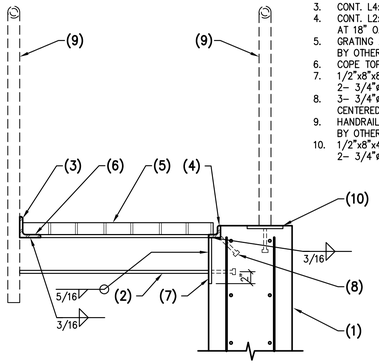

207 WALKWAY AT CONCRETE WALL
NO SCALE

NOTES:
1. HSS SQUARE OR RECTANGULAR COLUMN.
2. STEEL BEAM.
3. STEEL SHEAR PLATE. SEE TYP. BOLT SCHEDULE.
4. FOR SIZE, TYPE, AND NUMBER OF BOLTS, REFER TO TYP. BOLT SCHEDULE.
5. 1/2" STEEL CAP PLATE.
6. AT t ≤ 1/4" USE FILLET WELD SIZE TO MATCH "t". AT t > 1/4" USE 5/16" FILLET.
7. 1/2" STEEL BACKER PLATE x BEAM DEPTH x WIDTH OF COLUMN LESS 1".
8. TOP OF COLUMN AS OCCURS.
9. DEPTH TO MATCH JOIST SHOE.
10. BEAM BOTH SIDES WHERE OCCURS.

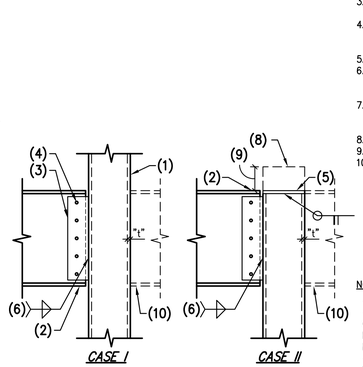

NOTES:
–DETAIL A MAY BE USED TYP. U.N.O.
–DETAIL B MAY BE USED AT CONTRACTOR'S OPTION WHERE HSS MIN. FLANGE THICKNESSES ARE MET PER SCHEDULE.
–WHERE COLUMNS ARE RECTANGULAR IN LIEU OF SQUARE, THE GREATER FLANGE LENGTH (I.E. WORST CASE) APPLIES PER SCHEDULE.
–CONTRACTOR MAY INCREASE PLAN COLUMN THICKNESS AT THEIR OPTION.

B SHEAR PLATE TO COLUMN

MINIMUM COLUMN FLANGE THICKNESS FOR DETAIL B

HSS MEMBER	THICKNESS ("t")
4x4	1/4"
5x5	1/4"
6x6	1/4"
7x7	1/4"
8x8	5/16"
9x9	5/16"
10x10	3/8"
12x12	3/8"
14x14	1/2"
16x16	1/2"

NOTES:
1. MASONRY WALL.
2. CONTINUOUS GROUTED BOND BEAM PER G.S.N.
3. CONTINUOUS LEDGER ANGLE.
4. STEEL DECK – FOR DIRECTION, SEE PLAN.
5. 1/2"x8"x4" STEEL PLATE W/ 2– 1/2"ø H.S. AT 5" O.C.

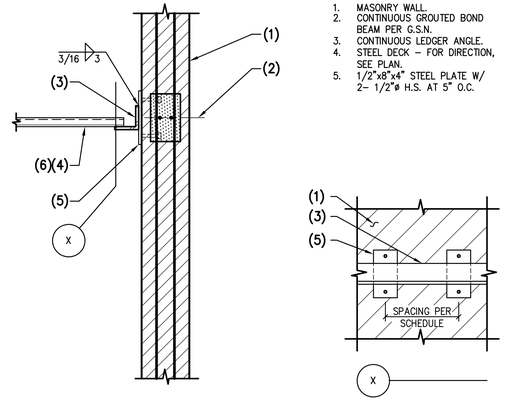

202 LEDGER ANGLE AND STEEL DECK AT MASONRY WALL
NO SCALE

NOTES:
1. CONCRETE WALL.
2. CONT. L2x2x1/4" W/ 1/2"ø H.S. AT 18" O.C.
3. GRATING AND ATTACHMENT BY OTHERS.
4. 1/2"x8"x4" STEEL PLATE W/ 2– 3/4"ø H.S. AT 5" O.C.
5. HANDRAIL POST AND ATTACHMENT BY OTHERS. (4'–0" O.C. MAX).

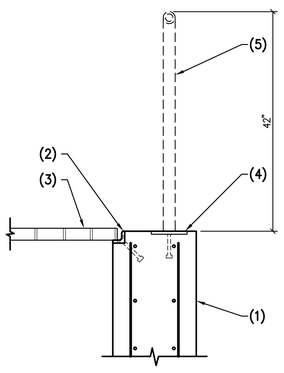

211 EDGE OF GRATING AT CONCRETE WALL
NO SCALE

NOTES:
1. STEEL BEAM.
2. CONCRETE WALL.
3. 3/8" STEEL SHEAR TAB.
4. 2– 1"ø BOLTS.
5. 1/2"x6"x14" STEEL PLATE W/ 3– 3/4"ø H.S. AT 5" O.C.

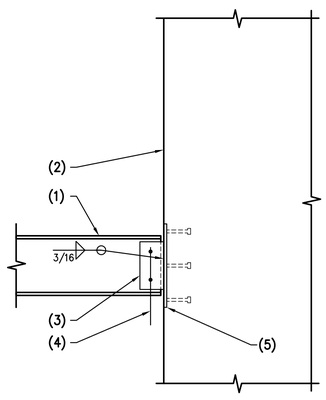

208 STEEL BEAM AT CONCRETE WALL
NO SCALE

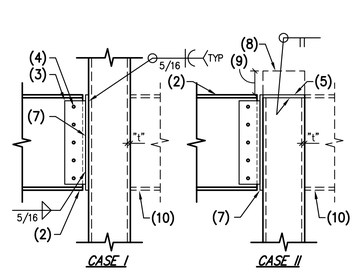

A SHEAR PLATE TO BACKER PLATE TO COLUMN

205 TYPICAL BEAM TO HSS STEEL COLUMN
NO SCALE

NOTES:
1. MASONRY WALL.
2. CONTINUOUS 8" DEEP GROUTED BOND BEAM.
3. SOLID GROUT 6" ALL AROUND ALL ANCHORS.
4. STEEL PLATE PER SCHEDULE BELOW.
5. STEEL BEAM.
6. 3/8" STEEL PLATE.
7. 1 1/2" SLOTTED HOLES.
8. FOR SIZE, TYPE, AND NUMBER OF BOLTS SEE TYPICAL BOLT SCHEDULE.

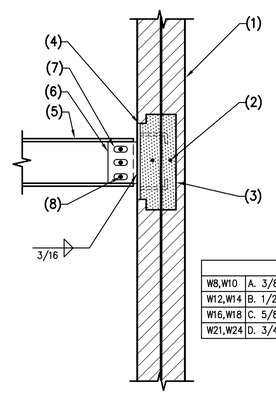

EMBED PLATE SCHEDULE	
W8,W10	A. 3/8"x4"x12" WITH 2– 3/4"ø H.S. AT 9" O.C.
W12,W14	B. 1/2"x8"x14" WITH 4– 3/4"ø H.S. AT 5"x11" O.C.
W16,W18	C. 5/8"x11"x19" WITH 6– 3/4"ø H.S. AT 8" O.C.
W21,W24	D. 3/4"x11"x27" WITH 8– 3/4"ø H.S. AT 8" O.C.

203 STEEL BEAM TO MASONRY WALL CONNECTION
NO SCALE

NO	BY	DATE	REVISIONS	DATE	APP.

Registered Professional Engineer (Civil)
CERTIFICATE NO.
70374
JAMES APPLEYARD
10/31/25
Date Signed
ARIZONA, U.S.A.

PREPARED BY: PKA
DESIGNED BY: JA
DRAWN BY: NS
CHECKED BY: JA
SCALE: AS NOTED
DATE: SEP 2025
JOB NO.: 23364

THESE DRAWINGS ARE THE PROPERTY OF P.A.C.E. AND SHALL NOT BE REPRODUCED IN ANY MANNER NOR BE USED FOR CONSTRUCTION UNLESS STAMPED "ISSUED FOR CONSTRUCTION".

TITLE: FRAMING DETAILS

JOB: TOWN OF JEROME WASTEWATER TREATMENT PLANT — YAVAPAI AZ

ISSUED FOR BID

PREPARED BY:
PACE
Advanced Water Engineering
8723 E. Via de Ventura, Suite 210 | SCOTTSDALE, CA 85258
P: (480) 991-3995 | | www.paceadvisor.com
TAYLOR B. PIERCE R.C.E 70097 DATE

SHEET
S4.1
65 OF 99 SHEETS

JOB NO. 23364

PK ASSOCIATES, LLC
6900 E. Belleview Ave. #200
Greenwood Village, Colorado 80111
Phone: (720) 799-1058
Email: cadd@pkastructural.com
Website: www.pkastructural.com

NOTES:

1. STEEL BEAM.
2. 3/8" STEEL SHEAR PLATE –USE 5/8" STEEL SHEAR PLATE WHERE "D" = 27" OR GREATER.
3. FOR SIZE, TYPE & NUMBER OF BOLTS, SEE TYPICAL BOLT SCHEDULE.
4. "D" = LESSER OF BEAM DEPTHS AS OCCURS.
5. WELD 3 SIDES TYPICAL – USE SAME CONNECTION AT STIFFENER PLATES WHEN REQUIRED.

NOTE:
AT ONE SIDED CONNECTIONS, INSTALL 3/8" STIFFENER PLATE OPPOSITE SHEAR PLATE.

212 *TYPICAL CONNECTION WIDE FLANGE BEAM TO BEAM*

NO SCALE

NO	BY	DATE	REVISIONS	DATE	APP.

Registered Professional Engineer (Civil)
CERTIFICATE NO.
70374
JAMES APPLEYARD
Date Signed 10/31/25
ARIZONA, U.S.A.

PREPARED BY: PKA
DESIGNED BY: JA
DRAWN BY: NS
CHECKED BY: JA
SCALE: AS NOTED
DATE: SEP 2025
JOB NO.: 23364

THESE DRAWINGS ARE THE PROPERTY OF P.A.C.E. AND SHALL NOT BE REPRODUCED IN ANY MANNER NOR BE USED FOR CONSTRUCTION UNLESS STAMPED "ISSUED FOR CONSTRUCTION".

TITLE
FRAMING DETAILS

JOB
TOWN OF JEROME
WASTEWATER
TREATMENT PLANT
YAVAPAI AZ

ISSUED FOR BID

PREPARED BY:
PACE
Advanced Water Engineering
9733 E. VIA de COMMERCIO, SUITE A-4, SCOTTSDALE, CA 85258
P: (480) 991-3595 | www.pacewater.com
TAYLOR B. PIERCE R.C.E 70097 DATE

SHEET
S4.2
66 OF 99 SHEETS

JOB NO. 23364

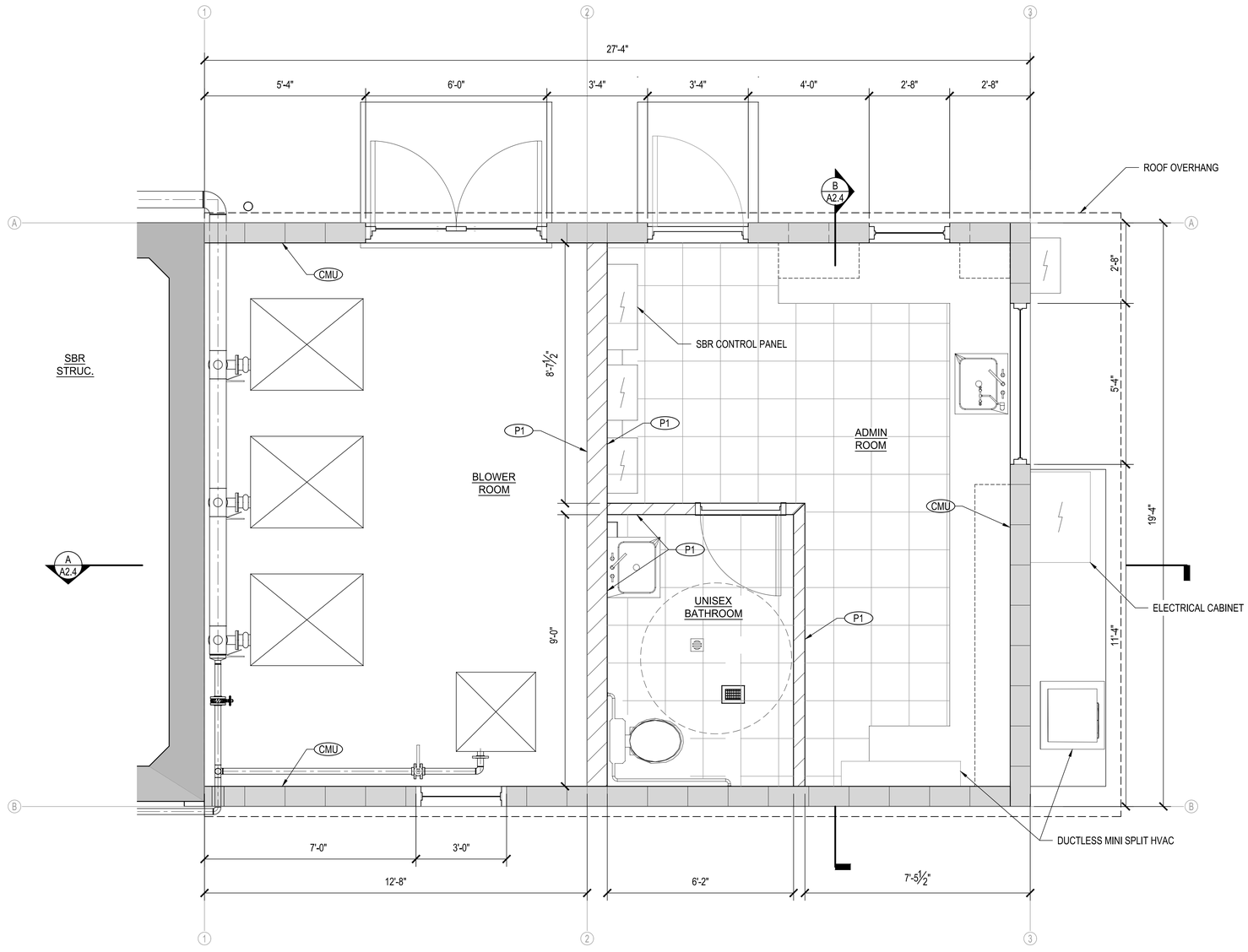

ARCH. PLAN
SCALE: 1/2" = 1'-0"

NORTH

GENERAL NOTES

1. ALL INTERIOR WALLS, EXTERIOR WALLS, AND CEILINGS SHALL BE INSULATED PER SPECIFICATION SECTION 07 2100 OF THE CONTRACT DOCUMENTS.

DOOR & WINDOW NOTES:

1. ALL EXITS SHALL OPEN FROM THE INSIDE WITHOUT THE USE OF A KEY AND/OR SPECIAL KNOWLEDGE (U.N.O.). MANUALLY OPERATED EDGE OR SURFACE MOUNTED FLUSH BOLTS AND SURFACE BOLTS ARE PROHIBITED.
2. PAINT STEEL DOORS AND FRAMES WITH ONE (1) COAT OF RUST INHIBITING PRIMER AND ONE (1) COAT OF SEMI-GLOSS ALKYD ENAMEL.
3. ALL INTERIOR DOORS TO BE SOLID CORE MASONITE DOOS IN "TIMELY" FRAMES (U.N.O.).
4. ALL DOOR HARDWARE TO BE AL SERIES "SCHLAGE" LEVER TYPE WITH FINISH PER OWNER'S DIRECTION. VERIFY KEYING WITH OWNER.
5. PROVIDE DOOR STOPS AS REQUIRED AT FLOOR AND/OR WALL.
6. ALL DOORS TO BE MASTER KEYED. VERIFY KEYING WITH OWNER.
7. ALL THRESHOLDS TO BE MAXIMUM HEIGHT OF 1/2".
8. DOOR LOCK AND LATCHES SHALL COMPLY WITH UBC SECTION 1004.3 AND ADA.
9. THE AUTHORITY HAVING JURISDICTION MAY INCREASE THE MAXIMUM EFFORT TO OPERATE FIRE DOORS IN ORDER TO ACHIEVE POSITIVE LATCHING, BUT NOT EXCEEDING THE 15 LP MAX.
10. MAXIMUM EFFORT TO OPERATE EXTERIOR DOORS IS 5 LBS.
11. HAND-ACTIVATED DOOR OPENING HARDWARE SHALL BE CENTERED BETWEEN 30" AND 44" A.F.F.
12. PROVIDE 1/4" TEMPERED GLASS AT ALL INTERIOR WINDOW LOCATIONS.
13. MAIN EXTERIOR DOORS: PROVIDE VISIBLE DURABLE SIGN ON THE EGRESS SIDE, ON OR ADJACENT TO THE DOOR, STATING: "THIS DOOR TO REMAIN UNLOCKED WHEN THE BUILDING IS OCCUPIED." THE SIGN SHALL BE IN LETTERS 1" HIGH ON A CONTRASTING BACKGROUND.

FLOOR PLAN NOTES:

1. ALL INSULATION SHALL HAVE FLAME SPREAD RATE NOT TO EXCEED 25 AND A SMOKE DENSITY NOT TO EXCEED 450 WHEN TESTED IN ACCORDANCE WITH STANDARD NO. 42-1.
2. PROVIDE 4'-0" HIGH ANGLE IRON DOOR GUARDS AT FLOOR OF EACH JAMB OF EACH OVERHEAD DOOR OPENING.
3. ALL NEW DRYWALL SHALL BE TAPED, TEXTURED, AND PAINTED WITH ONE (1) COAT VINYL ACRYLIC WALL SEALER AND TWO (2) COATS LO-GLO ACRYLIC SEMI-GLOSS ENAMEL. PROVIDE SAMPLE FOR OWNER'S APPROVAL. PROVIDE LIGHT KNOCKDOWN TEXTURE.
4. RESTROOM DRYWALL SHALL BE WATER RESISTANT TYPE X. RESTROOMS TO HAVE +4' HIGH 12"x12" GLAZED CERAMIC TILE BY "DAL TALE" OR EQUAL, FROM STANDARD COLOR SELECTION WAINSCOT. PAINT DRYWALL ABOVE WITH ONE (1) COAT PRIMER AND TWO (2) COATS SEMI-GLOSS ENAMEL PAINT. USE DUNN-EDWARDS OR FRAZEE.
5. BLOWER ROOM: PROVIDE SAWCUT CONTROL JOINTS AT 5'x5' MINIMUM FOR AREAS WITH SEALED CONCRETE FINISHED FLOOR. RESTROOM AND OPERATIONS ROOM TO RECEIVE 12"x12" VINYL COMPOSITE TILES. PROVIDE VCT AND CERAMIC TILE SAMPLES FOR OWNER'S SELECTION.
6. PROVIDE 4" CERAMIC TILE BASE TO MATCH FLOOR TILE. AT RESTROOM, PROVIDE 6" COVERED CERAMIC TILE BASE.
7. SEE PLUMBING DRAWING FOR FLOOR AREA DRAINAGE AND RESTROOM. PLUMBING DRAWINGS SHALL APPLY FOR APPLICABLE FIXTURES.

WALL FINISH LEGEND

P1 DUNN EDWARDS - FOSSIL

CMU CLEAR SEALER

INSTAL 4" HIGH RESILIENT BASE FOR ALL ROOMS.

FLOOR FINISH LEGEND

SEALED CONCRETE

12"X12" VINYL COMPOSITE TILES

NO	BY	DATE	REVISIONS	DATE	APP.

Registered Professional Engineer (Civil) CERTIFICATE NO. 70097 TAYLOR B. PIERCE Registered ARIZONA, U.S.A. Expires 12/31/28

PREPARED BY: PACE
DESIGNED BY: NE
DRAWN BY: DS, WW
CHECKED BY: TP
SCALE: AS NOTED
DATE: NOV 2025
JOB NO.: B614

THESE DRAWINGS ARE THE PROPERTY OF P.A.C.E. AND SHALL NOT BE REPRODUCED IN ANY MANNER NOR BE USED FOR CONSTRUCTION UNLESS STAMPED 'ISSUED FOR CONSTRUCTION'.

TITLE
BLOWER OPS ARCH PLAN

JOB
TOWN OF JEROME
WASTEWATER
TREATMENT PLANT
YAVAPAI CO. AZ

100% ISSUED FOR BID

PREPARED BY:
PACE
Advanced Water Engineering
8723 E. VIA DE VENTURA, SUITE A-100, SCOTTSDALE, CA 85258
P: (480) 991-3955 | www.pacewater.com
TAYLOR B. PIERCE R.C.E. 70097 DATE

SHEET
A1.0
67 OF 99 SHEETS

JOB NO. B614

W:\B614\Engineering\B614-30\sheets\B614 - A2.0 BLOWER OPS ARCH PLAN.dwg - Tab: A1.0 - by reddington on 11/21/25 at 12:26:37 PM

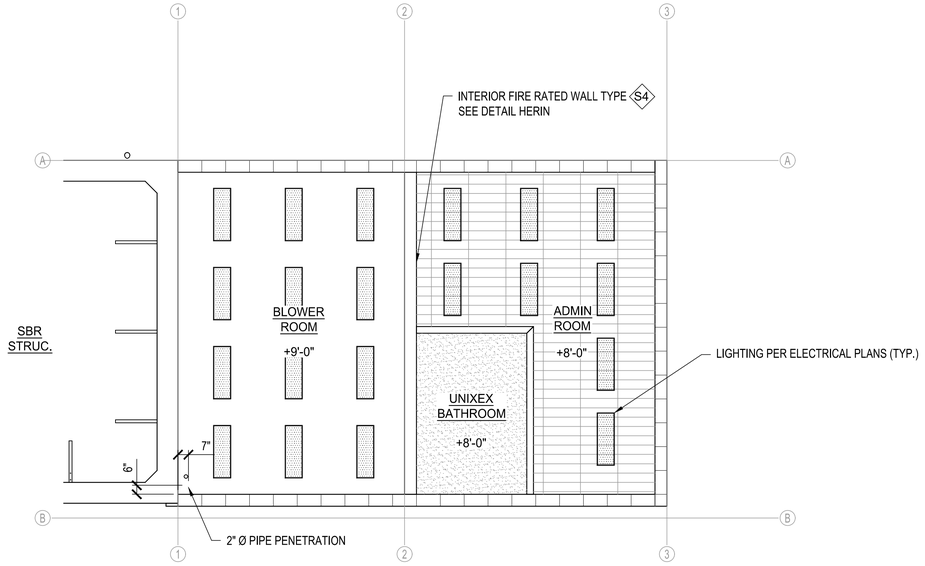

REFLECTED CEILING PLAN

SCALE: 1/4" = 1'-0"

CEILING NOTES:

1. T-BAR SUSPENSION SYSTEM TO BE PROVIDED BY ARMSTRONG OR EQUAL. SEE REFLECTED CEILING PLANS FOR LOCATIONS: 2'X4'X5/8" TILE AND CEILING HEIGHTS. CEILINGS TO BE LAID OUT CENTERED IN ROOMS IN BOTH DIRECTIONS AS SHOWN. HANG T-BAR SUSPENSION SYSTEM FROM ROOF JOISTS WITH DIAGONAL HANGERS TO PREVENT SAGGING. COLOR BY OWNER.
2. RESTROOM PER REFLECTED CEILING PLAN TO HAVE 5/8" DRYWALL CEILINGS. SUPPORT WITH 3-5/8"X22 GAUGE METAL STUDS AT 16" O.C. FOR SPANS 8' OR LESS. FOR SPANS OVER 8' USE 6"X22 GAUGE METAL STUDS AT 16".

CEILING FINISH LEGEND:

- 2'x4'x5/8" SUSPENDED T-BAR CEILING
- 5/8" DRYWALL CEILING
- EXPOSED CEILING
- 2' x 4' RECESSED FLORESCENT LIGHT FIXTURE

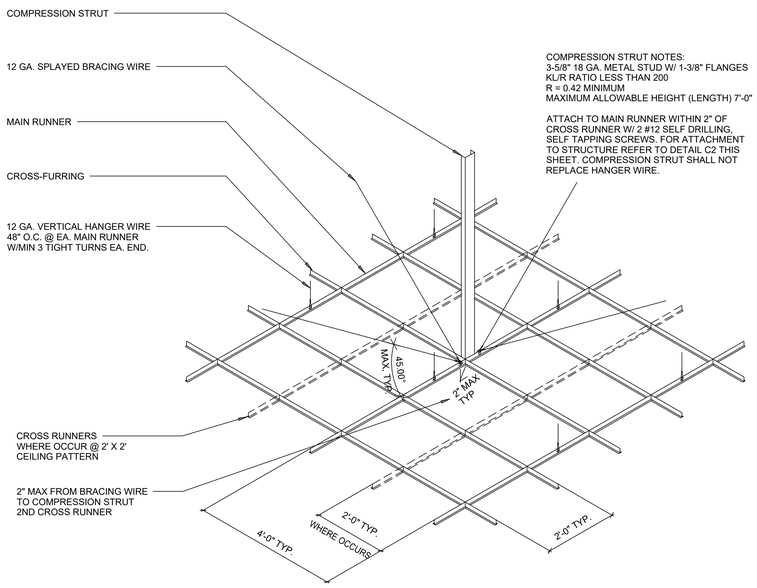

COMPRESSION STRUT NOTES:
3-5/8" 18 GA. METAL STUD W/ 1-3/8" FLANGES
KL/R RATIO LESS THAN 200
R = 0.42 MINIMUM
MAXIMUM ALLOWABLE HEIGHT (LENGTH) 7'-0"

ATTACH TO MAIN RUNNER WITHIN 2" OF CROSS RUNNER W/ 2 #12 SELF DRILLING, SELF TAPPING SCREWS. FOR ATTACHMENT TO STRUCTURE REFER TO DETAIL C2 THIS SHEET. COMPRESSION STRUT SHALL NOT REPLACE HANGER WIRE.

NOTE: PROVIDE SETS OF FOUR SPLAYED BRACING WIRES, ORIENTED 90 DEGREES FROM EACH OTHER, AND COMPRESSION STRUT AT A SPACING NOT MORE THAN 12'-0" x 12'-0" ON CENTER. PROVIDE 12 GAUGE MINIMUM SPLAYED BRACING WIRES FASTENED WITH NOT LESS THAN FOUR TIGHT TURNS IN 1-1/2 INCHES AT BOTH ENDS OF WIRE. SLOPE OF SPLAYED BRACING WIRES SHOULD NOT EXCEED 45 DEGREES FROM THE PLANE OF THE CEILING.

NOTE: PROVIDE HANGER WIRES AT A SPACING NOT MORE THAN 4'-0" X 4'-0" ON CENTER. PROVIDE 8 OR 12 GAUGE MINIMUM HANGER WIRE FASTENED WITH NOT LESS THAN THREE TIGHT TURNS IN 1-1/2 INCHES AT BOTH ENDS OF WIRE.

2'x4' SUSPENDED LAY-IN CEILING GRID

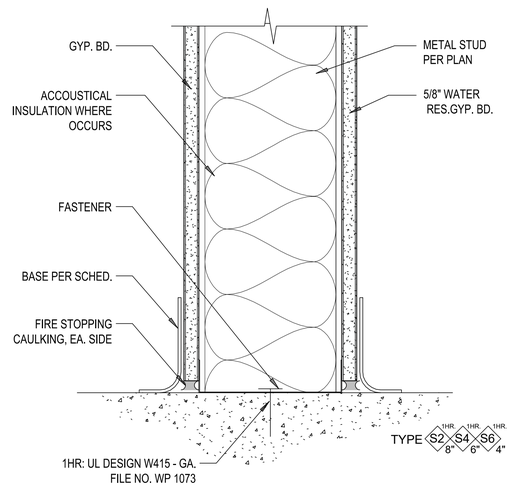

1HR: UL DESIGN W415 - GA.
FILE NO. WP 1073

INTERIOR RATED WALL

NO	BY	DATE	REVISIONS	DATE	APP.

Registered Professional Engineer (Civil)
CERTIFICATE NO. 45171
Timothy B. Pierce
Signed
ARIZONA, U.S.A.
Expires 12/31/28

PREPARED BY: PACE
DESIGNED BY: NE
DRAWN BY: DS, WW
CHECKED BY: TP
SCALE: AS NOTED
DATE: NOV 2025
JOB NO.: B614

THESE DRAWINGS ARE THE PROPERTY OF P.A.C.E. AND SHALL NOT BE REPRODUCED IN ANY MANNER NOR BE USED FOR CONSTRUCTION UNLESS STAMPED 'ISSUED FOR CONSTRUCTION'.

TITLE
BLOWER OPS ARCH REFLECTED CEILING PLAN

JOB
TOWN OF JEROME
WASTEWATER
TREATMENT PLANT
YAVAPAI CO. AZ

100% ISSUED FOR BID

PREPARED BY:
PACE
Advanced Water Engineering
8723 E. VIA DE VENTURA, SUITE 290 | SCOTTSDALE, CA 85258
P: (480) 991-3995 | www.pacewater.com
TAYLOR B. PIERCE R.C.E. 70097 DATE

SHEET
A2.0
68 OF 99 SHEETS

JOB NO. B614

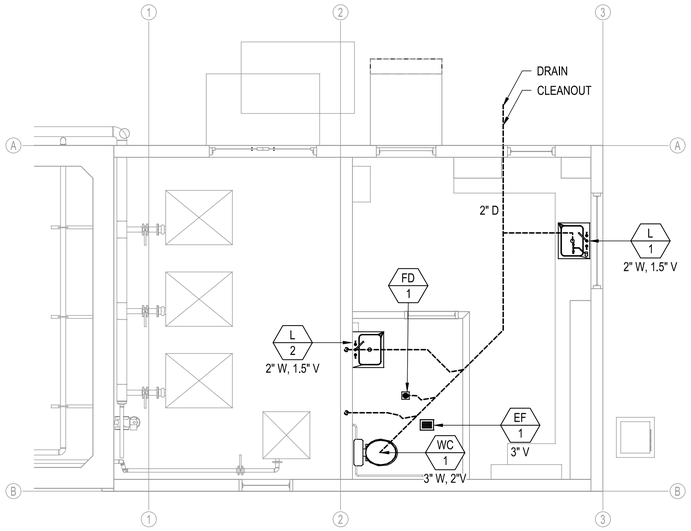

SEWER PLUMBING PLAN
SCALE: 1/4" = 1'-0"

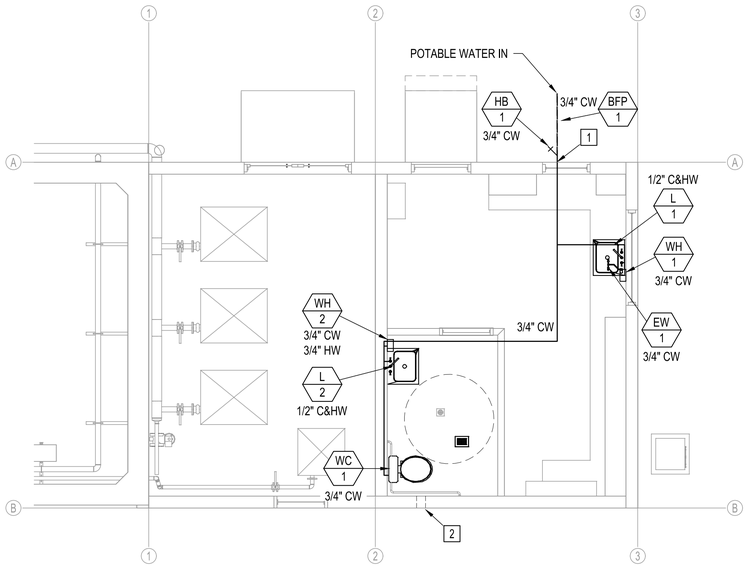

WATER PLUMBING PLAN
SCALE: 1/4" = 1'-0"

PLUMBING NOTES

1. ALL EQUIPMENT & FIXTURE COLD WATER AND HOT WATER CONNECTION SHALL BE INSTALLED W/ ISOLATION VALVE.
2. ALL PLUMBING AND HVAC LINES ARE SCHEMATIC. CONTRACTOR TO INSTALL PER BUILDING CODES.

CONSTRUCTION NOTES

1 INSTALL 2" REDUCED PRESSURE-TYPE BACKFLOW PREVENTER UNIT & ASSEMBLY COMPONENTS. BACKFLOW PREVENTER SHALL BE FEBCO, WATTS, WILKENS, OR APPROVED EQUAL.

2 INSTALL EXHAUST VENT DUCT, DISCHARGE TO WALL.

FIXTURE SCHEDULE

ITEM	FIXTURE	ROUGH-IN CONNECTIONS				DESCRIPTION
		COLD WATER	HOT WATER	WASTE	VENT	(ALL PLUMBING FIXTURES MUST BE APPROVED BY THE ENGINEER & OWNER PRIOR TO PURCHASING)
WC 1	WATER CLOSET (ADA)	1"	--	3"	2"	KOHLER OR AMERICAN STANDARD ADA HEIGHT ELONGATED WITH SLOAN AUTOMATIC FLUSH VALVE.
L 1	LAVATORY	1/2"	1/2"	2"	1-1/2"	ADA BARRIER FREE LAVATORY, COUNTER MOUNTED, WITH EXTRA HOLE FOR SOAP DISPENSER, METERED, SINGLE HANDLE SELF CLOSING FAUCET, LOOSE KEY STOPS WITH RIGID SUPPLIES, GRID DRAIN, P-TRAP.
L 2	SINK	1/2"	1/2"	2"	1-1/2"	ADA BARRIER FREE SINK, WALL MOUNTED, WITH EXTRA HOLE FOR SOAP DISPENSER, METERED, SINGLE HANDLE SELF CLOSING FAUCET, LOOSE KEY STOPS WITH RIGID SUPPLIES, GRID DRAIN, P-TRAP.
WH 1	WATER HEATER	3/4"	3/4"	--	--	RHEEM PERFORMANCE TANKLESS ELECTRIC WATER HEATER. 13 KW, 2.54 GPM
WH 2	WATER HEATER	3/4"	3/4"	--	--	RHEEM PERFORMANCE TANKLESS ELECTRIC WATER HEATER. 13 KW, 2.54 GPM
FD 1	FLOOR DRAIN	--	--	SEE PLAN FOR SIZE		ZURN NO. Z-415-NH-B-P, CAST IRON, COMPLETE WITH ROUND POLISHED NICKEL-BRONZE TOP, FLASHING COLLAR, AND P-TRAP.
HVAC 1	HVAC		--	--	--	1 TON, 12,000 BTU AIR CONDITIONER HEAT PUMP (COOLING/HEATING) SPLIT SYSTEM W/ THERMOSTAT, 16 SEER, 120V 1PH, 60 HZ. INDOOR AIR HANDLER TO BE HORIZONTALLY MOUNTED PER MFR REQUIREMENTS. AIR COMPRESSOR INSTALLED ON ROOF PER PLAN.
HB 1	HOSE BIBB	3/4"	--	--	--	HOSE BIBB MOUNTED 24" ABOVE FINISHED FLOOR.
EW 1	EYE WASH STATION	3/4"	--	--	--	EMERGENCY EYEWASH STATION, GUARDIAN G1000 FAUCET OR EQUAL.
EF 1	EF		--	--	4	100 CFM EXHAUST FAN W/ 100W LIGHT, BROAN MODEL 750 OR EQUAL.
BFP 1	BFP	--	--	--	--	3/4" BACK FLOW PREVENTER

NO	BY	DATE	REVISIONS	DATE	APP.

Registered Professional Engineer (Civil) CERTIFICATE NO. 76087 TAYLOR B. PIERCE Signed ARIZONA, U.S.A. Expires 12/31/28

PREPARED BY: PACE
DESIGNED BY: NE
DRAWN BY: DS, WW
CHECKED BY: TP
SCALE: AS NOTED
DATE: NOV 2025
JOB NO.: B614

THESE DRAWINGS ARE THE PROPERTY OF P.A.C.E. AND SHALL NOT BE REPRODUCED IN ANY MANNER NOR BE USED FOR CONSTRUCTION UNLESS STAMPED 'ISSUED FOR CONSTRUCTION'.

TITLE: **BLOWER OPS ARCH SEWER & PLUMBING PLAN**

JOB: TOWN OF JEROME WASTEWATER TREATMENT PLANT — YAVAPAI CO. AZ

100% ISSUED FOR BID

PREPARED BY: TAYLOR B. PIERCE R.C.E 70097 DATE

PACE
Advanced Water Engineering
8723 E. Via de Commercio, Suite 1, Anaheim Hills, CA 92808
P: (480) 991-3995 | www.pacewater.com

SHEET **A3.0**
69 OF 99 SHEETS

JOB NO. B614

W:\B614\Engineering\B614-30\sheets\B614 - A3.0 BLOWER OPS ARCH PLAN.dwg - Tab: A3.0 - by nwddington on 11/21/25 at 12:26:57 PM

CONSTRUCTION NOTES:

1. INSTALL ALUMINUM WINDOW SYSTEM.
2. INSTALL HOLLOW METAL DOOR AND FRAME PER PLAN.

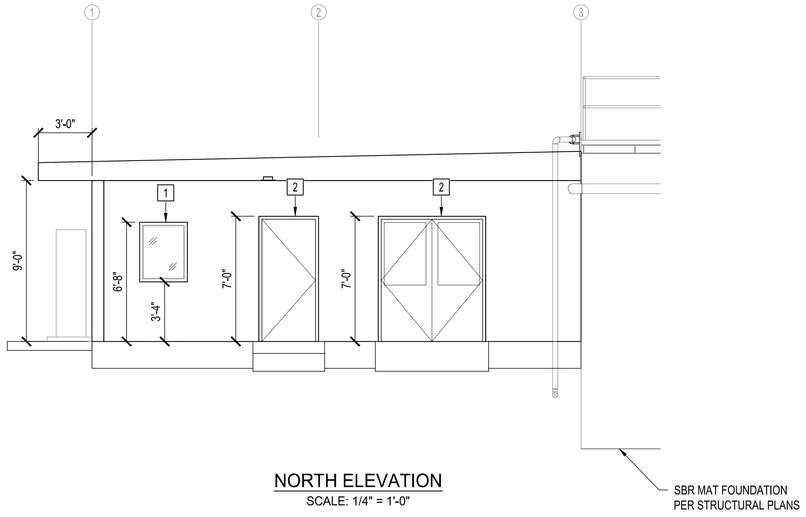

NORTH ELEVATION
SCALE: 1/4" = 1'-0"

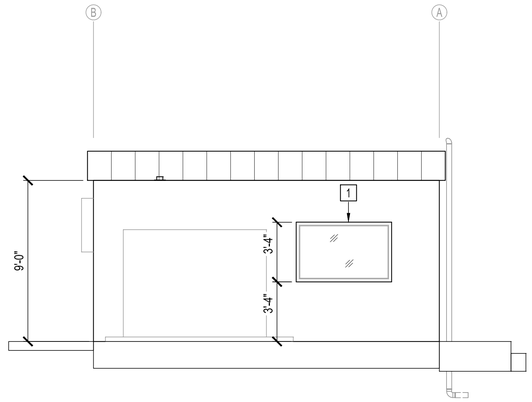

EAST ELEVATION
SCALE: 1/4" = 1'-0"

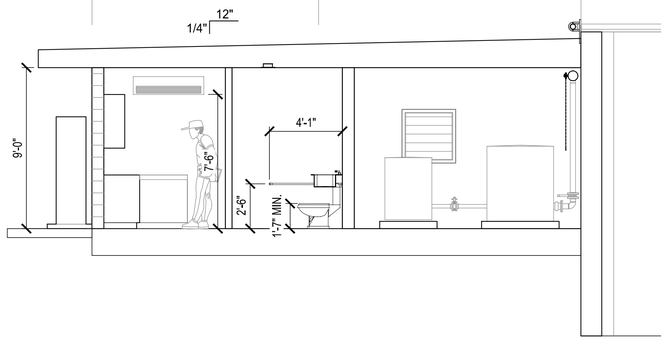

SECTION - A
SCALE: 1/4" = 1'-0"

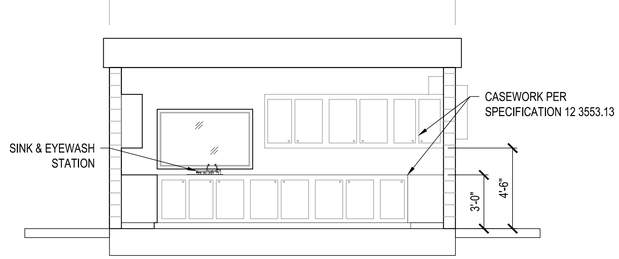

SECTION - B
SCALE: 1/4" = 1'-0"

THESE DRAWINGS ARE THE PROPERTY OF P.A.C.E. AND SHALL NOT BE REPRODUCED IN ANY MANNER NOR BE USED FOR CONSTRUCTION UNLESS STAMPED 'ISSUED FOR CONSTRUCTION'.

NO	BY	DATE	REVISIONS	DATE	APP.

Registered Professional Engineer (Civil) CERTIFICATE NO. 70097 TAYLOR B. PIERCE Signed STATE OF ARIZONA, U.S.A. Expires 12/31/28

PREPARED BY: PACE
DESIGNED BY: NE
DRAWN BY: DS, WW
CHECKED BY: TP
SCALE: AS NOTED
DATE: NOV 2025
JOB NO.: B614

TITLE: **BLOWER OPS ARCH ELEVATIONS & SECTIONS**

JOB: TOWN OF JEROME WASTEWATER TREATMENT PLANT — YAVAPAI CO. AZ

100% ISSUED FOR BID

PREPARED BY:
TAYLOR B. PIERCE R.C.E 70097 DATE

PACE
Advanced Water Engineering
8723 E. VIA DE COMMERCIO, BLDG. 1, SUITE 1, SCOTTSDALE, AZ 85258
P.: (480) 991-3595 | www.pacewater.com

SHEET
A4.0
70 OF 99 SHEETS

JOB NO. B614

W:\B614\Engineering\B614-30\sheets\B614 - A2.3 BLOWER OPS ARCH SECTIONS.dwg - Tab: A4.0 - by reddington on 11/17/25 at 9:58:04 AM

TOWN OF JEROME WWTP
ELECTRICAL
JEROME, ARIZONA

GENERAL ELECTRICAL NOTES

1. ELECTRICAL WORK SHALL COMPLY WITH THE NATIONAL ELECTRIC CODE (2011), FEDERAL, STATE AND LOCAL JURISDICTION CODES.

2. ALL WORK SHALL BE DONE IN A NEAT, WORKMANLIKE, FINISHED AND SAFE MANNER, ACCORDING TO THE LATEST PUBLISHED NATIONAL ELECTRICAL CONTRACTORS ASSOCIATION STANDARDS OF INSTALLATION, UNDER COMPETENT SUPERVISION.

3. VISIT THE SITE PRIOR TO BIDDING TO BECOME FAMILIAR WITH EXISTING CONDITIONS AND ALL OTHER FACTORS WHICH MAY AFFECT THE EXECUTION OF THIS WORK. INCLUDE ALL RELATED COSTS IN THE INITIAL BID PROPOSAL.

4. CONTRACTOR IS RESPONSIBLE FOR VERIFYING LOCATIONS OF ALL EXISTING UTILITIES AND AVOIDING DAMAGE TO SAME. CONTRACTOR SHALL BE RESPONSIBLE FOR DAMAGE TO UTILITIES CAUSED AS A RESULT OF HIS WORK. CALL (602) 263–1100 FOR BLUE STAKES. IRRIGATION LINES LESS THAN 2" WILL NOT BE MARKED AND SHALL BE REPAIRED IN KIND BY THE CONTRACTOR.

5. PROPER PROTECTION OF THE CONSTRUCTION AREA FOR SAFETY SHALL BE THE RESPONSIBILITY OF THE CONTRACTOR. COVER ALL TRENCHES AT THE END OF EACH WORK DAY. BARRICADES SHALL BE INSTALLED AS DIRECTED BY THE EPCOR OR THE PROJECT INSPECTOR. THE SITE AND ALL WORK SHALL CONFORM TO OSHA REQUIREMENTS.

6. CONTRACTOR SHALL PAY FOR PERMITS AND INSPECTIONS AS MAY BE REQUIRED AND PROVIDE A CERTIFICATE OF INSPECTION TO THE EPCOR.

7. PROTECT ALL MATERIAL AND EQUIPMENT INSTALLED AGAINST DAMAGE BY OTHER TRADES, WEATHER CONDITIONS OR ANY OTHER CAUSES. EQUIPMENT FOUND DAMAGED OR IN OTHER THAN NEW CONDITION WILL BE REJECTED AS DEFECTIVE. ALL COMPONENTS SHALL BE FREE OF DUST, GRIT AND FOREIGN MATERIALS, AND LEFT AS NEW BEFORE FINAL ACCEPTANCE OF WORK.

8. LEAVE THE SITE CLEAN, REMOVE ALL DEBRIS, EMPTY CARTONS, TOOLS, CONDUIT, WIRE SCRAPS AND ALL MISCELLANEOUS SPARE EQUIPMENT AND MATERIALS USED IN THE WORK DURING CONSTRUCTION.

9. IT IS THE OBLIGATION OF THE CONTRACTOR TO ORGANIZE HIS WORK SO THAT A COMPLETE ELECTRICAL, INSTRUMENTATION, AND/OR CONTROL SYSTEM FOR THE FACILITY WILL BE PROVIDED AND SUPPORTED BY ACCURATE SHOP AND RECORD DRAWINGS, AND ALL O & M MANUALS.

10. ALL UNDERGROUND CONDUIT SHALL BE SCHEDULE 40 PVC, BURIED 24" MINIMUM BELOW FINISHED GRADE, UNLESS SPECIFICALLY NOTED OTHERWISE ON PLANS OR IN DETAILS.

11. PROVIDE EMT INDOOR AND GRS OUTDOOR FOR ABOVE GROUND CONDUIT. WHERE METALLIC CONDUITS COME IN CONTACT WITH DIRT, THEY SHALL BE HALF LAP WRAPPED WITH SCOTCH 50 TAPE TO 12" AFG. FITTINGS SHALL BE STEEL, THREADED TYPE WITH INSULATED THROATS. SECURELY ATTACH ALL SURFACE MOUNTED CONDUIT EVERY 10 FEET AND WITHIN 3 FEET OF EACH JUNCTION BOX, PER NEC ARTICLE 344.30. OUTDOOR FLEX CONDUIT SHALL BE LIQUID TITE UV RESISTANT (BLACK) FLEX CONDUIT.

12. UNDERGROUND VERTICAL AND HORIZONTAL 90 DEGREE BEND CONDUIT SHALL BE GRS HALF LAPPED WRAPPED WITH SCOTCHRAP 50 10–MIL TAPE TO 18" MIN ABOVE GRADE WITH A RADIUS OF NOT LESS THAN 18" (FACTORY BENDS ONLY SHALL BE USED)

13. UNDERGROUND CONDUITS SHALL BE A MINIMUM 1".

14. ALL FEEDERS AND BRANCH CIRCUIT WIRE SHALL BE COPPER TYPE XHHW (75 DEGREE C) FOR BELOW GRADE INSTALLATIONS (AND CONDUIT RISERS) AND THHN/THWN (75 DEGREE C) FOR ABOVE GRADE INSTALLATIONS. MINIMUM SIZE SHALL BE #12 AWG, UNLESS SPECIFICALLY NOTED OTHERWISE ON PLANS OR IN DETAILS. ALL WIRING SHALL BE IN CONDUIT.

15. A SEPARATE GREEN INSULATED EQUIPMENT GROUNDING CONDUCTOR (BOND) SHALL BE INSTALLED WITHIN EACH RACEWAY PER NEC CODE.

16. WHEN A PANEL IS SUPPLIED BY A FEEDER OR BRANCH CIRCUIT, ANY INSTALLED GROUNDED CONDUCTOR SHALL NOT BE CONNECTED TO THE EQUIPMENT GROUNDING CONDUCTOR (GEC) OR TO THE GROUNDING ELECTRODE(S) PER NEC ARTICLE 250.32(B).

17. BOND ALL ENCLOSURES PER NEC ARTICLE 250.96.

18. CONTRACTOR SHALL PLAN AND INSTALL WORK IN SUCH A MANNER AS TO CONFORM TO THE STRUCTURE, AVOID OBSTRUCTIONS, PRESERVE HEADROOM AND KEEP OPENINGS AND PASSAGEWAYS CLEAR.

19. CONTRACTOR SHALL PROVIDE ALL LABOR, MATERIAL, ETC. NECESSARY FOR A COMPLETE AND WORKABLE ELECTRICAL SYSTEM WHETHER OR NOT THESE ITEMS ARE SPECIFICALLY NOTED ON THESE DRAWINGS. INCIDENTAL ITEMS NOT INDICATED ON THE DRAWINGS, NOR MENTIONED IN SPECIFICATIONS THAT CAN BE LEGITIMATELY AND REASONABLY INFERRED TO BELONG TO THE WORK DESCRIBED OR BE NECESSARY IN GOOD PRACTICE TO PROVIDE A COMPLETE SYSTEM, SHALL BE FURNISHED AND INSTALLED AS THOUGH ITEMIZED HERE IN EVERY DETAIL.

20. CONTRACTOR IS RESPONSIBLE FOR AND SHALL PROVIDE ALL LABOR, MATERIAL, TRENCHING, CONDUIT, TRANSFORMER PAD AND OTHER REQUIRED EQUIPMENT PER UTILITY COMPANY PLANS AND SPECIFICATIONS NECESSARY FOR A COMPLETE UNDERGROUND CONDUIT SYSTEM FROM THE UTILITY POINT OF SERVICE TO THE UTILITY CO. TRANSFORMER AND FROM THE UTILITY CO. TRANSFORMER TO THE ELECTRICAL SERVICE ENTRANCE SECTION.

21. ALL TRENCHING, CONDUITS, ETC. SHALL BE ROUTED AND INSTALLED IN SUCH A MANNER THAT WILL NOT DAMAGE EXISTING FACILITIES. SHOULD DAMAGE OCCUR, IT WILL BE THE CONTRACTORS RESPONSIBILITY TO REPAIR DAMAGE TO THE SATISFACTION OF THE EPCOR OR INSPECTOR.

22. ALL CONDUIT RUNS SHOWN ON THIS PLAN ARE SCHEMATIC IN NATURE. THE CONTRACTOR SHALL MAKE SURE THAT ALL CONDUIT, ETC. FALLS WITHIN THE CONSTRUCTION AREA/RIGHT OF WAY. (THIS INCLUDES MAINTAINING ALL REQUIRED CLEARANCES.)

23. WHEN CROSSING PATHWAYS OR SIDEWALKS, CONTRACTOR SHALL BORE UNDER EXISTING CONCRETE WALKS AND SAWCUT ASPHALT WALKS. ASPHALT WALKS SHALL BE REPLACED IN KIND.

24. CONTRACTOR SHALL GUARANTEE WORK INSTALLED UNDER THE CONTRACT TO BE FREE FROM DEFECTIVE WORKMANSHIP AND MATERIALS, USUAL WEAR EXPECTED, AND SHOULD ANY SUCH DEFECTS DEVELOP WITHIN A PERIOD OF ONE YEAR ACCEPTANCE OF THE PROJECT BY THE EPCOR, THE CONTRACTOR SHALL REPAIR AND/OR REPLACE ANY DEFECTIVE ITEMS AND DAMAGE RESULTING FROM FAILURE OF THESE ITEMS, AT NO EXPENSE WHATSOEVER TO THE EPCOR.

25. CONTRACTOR SHALL IDENTIFY EQUIPMENT PANELS, DISCONNECTS, PANELS, INSTRUMENTS ETC. USING P&ID NOMENCLATURE WITH 3/32–INCH THICK LAMINATED PHENOLIC TYPE NAMEPLATES WITH 1/4–INCH MINIMUM HEIGHT LETTERS. NAMEPLATE TO BE BLACK MATTE FINISH SURFACE WITH WHITE LETTER ENGRAVING AND BE UV RESISTANT. ATTACH NAMEPLATE TO THE OUTSIDE PANEL FACE WITH TWO STAINLESS STEEL SELF–TAPPING SCREWS. NAMEPLATE SHALL READ THE EQUIPMENT NAME AND P&ID NOMENCLATURE. SEE NEC ARTICLE 230.70(B) FOR SERVICE EQUIPMENT.

26. ALL CIRCUITS SHALL BE LEGIBLY IDENTIFIED AT THE PANEL, JUNCTION BOXES AND AT ALL EQUIPMENT IN A PERMANENT MANNER (I.E. ETCHED PLATES, CONDUCTOR TAG, PERMANENT MARKER, ETC.). THE LABELING SHALL INCLUDE PANEL CIRCUIT NUMBER, "TO" AND "FROM" IDENTIFICATION, AND MARKED "SPARE" WHERE APPLICABLE.

27. CONTRACTOR SHALL TEST ELECTRICAL SYSTEM FOR SHORT CIRCUITS AND MEGGER TEST FEEDERS AND BRANCH CIRCUIT WIRING. CONTRACTOR SHALL INSURE LOW IMPEDANCE GROUND PATH SYSTEM. PROVIDE CERTIFIED TEST RESULTS FOR MEGGER TEST TO EPCOR UPON COMPLETION OF PROJECT.

28. CONTRACTOR SHALL PERFORM HIGH POTENTIAL (HIPOT) TESTING WHEN REQUIRED BY LOCAL JURISDICTION OR EPCOR.

29. CONTRACTOR SHALL PROVIDE A GROUND–FAULT COORDINATION STUDY AND PERFORM RECOMMENDED SETTINGS ON NEW OVERCURRENT PROTECTION DEVICES, PROVIDE LABELS ON EQUIPMENT INDICATING SETTINGS.

30. CONTRACTOR SHALL PROVIDE AN ARC–FLASH STUDY, PROVIDE ALL APPLICABLE LABELS ON NEW EQUIPMENT AFTER STUDY IS COMPLETED.

31. ALL CONDUIT AND J–BOXES SHOWN SHALL BE CONCEALED WHEN POSSIBLE. WHEN NOT POSSIBLE, CONDUIT AND J–BOXES MAY BE SURFACE MOUNTED WITH PERMISSION OF THE EPCOR OR EPCOR'S REPRESENTATIVE.

32. CONTRACTOR SHALL COORDINATE ALL EQUIPMENT CONNECTIONS WITH EQUIPMENT SUPPLIER PRIOR TO ROUGH–IN. PROVIDE ADDITIONAL FUSED DISCONNECT SWITCHES AND CONTROLS IF OVERCURRENT PROTECTION OR CONTROLS IS NOT INTEGRAL WITH UNITS.

33. ALL EQUIPMENT SHALL BE FUSE SIZED PER MANUFACTURES RECOMMENDATIONS AND U.L. APPROVAL.

34. ELECTRICAL DEVICES, DISCONNECT SWITCHES, ETC., SHALL BE SUPPORTED INDEPENDENT OF AND ISOLATED FROM EQUIPMENT VIBRATIONS.

35. FULL LOAD AMPS (FLA) SIZES, AS NOTED IN THESE DRAWINGS, ARE BASED ON SPECIFIED EQUIPMENT DATA. CONTRACTOR SHALL VERIFY NAMEPLATE FLA OF EQUIPMENT SUPPLIED AND COORDINATE ACCORDINGLY PER EQUIPMENT SUPPLIERS RECOMMENDATIONS.

36. ALL OUTDOOR ELECTRICAL EQUIPMENT SHALL BE NEMA–3R OR NEMA–4 ENCLOSURES.

37. CONDUITS OR RACEWAYS ROUTED FROM INDOORS TO OUTDOORS OR AS DESCRIBED IN NEC 300.7(A), SHALL BE SEALED WITH A PLIABLE SEALING COMPOUND AT A CONDUIT BODY OR AT A JUNCTION BOX BEFORE THE CONDUIT ENTERS THE COLDER ENVIRONMENT.

38. CONDUITS OR RACEWAYS INSTALLED IN AREAS WHERE ELEVATION CHANGES MAY CAUSE WATER OR MOISTURE TO ENTER THE ELECTRICAL EQUIPMENT THROUGH THE CONDUIT SHALL BE SEALED WITH A HERMETIC CONDUIT SEAL AT BOTH ENDS OF THE CONDUIT OR RACEWAY.

39. MATERIALS SHALL BE NEW AND OF THE BEST QUALITY WITH MANUFACTURER'S NAME PRINTED THEREON. MATERIALS SHALL BE MANUFACTURED IN ACCORDANCE WITH NEMA, ANSI, UNDERWRITER'S LABORATORY OR OTHER APPLICABLE STANDARDS AND RATED FOR HEAVY DUTY SERVICE.

40. ALL WIRING DEVICES SHALL BE SPECIFICATION GRADE. ALL 15 AND 20 AMP, 125 AND 250 VOLT, NONLOCKING RECEPTACLES INSTALLED OUTDOORS SHALL BE LISTED WEATHER–RESISTANT TYPE. ALL WEATHERPROOF WHILE IN–USE RECEPTACLE COVERS SHALL BE METAL.

41. SELECTION OF MATERIALS SHALL BE IN STRICT ACCORDANCE WITH THE DRAWINGS AND/OR SPECIFICATIONS. THE USE OF MANUFACTURER'S NAME, MODEL, AND NUMBER IS INTENDED TO ESTABLISH STYLE, QUALITY, APPEARANCE, USEFULNESS AND BID PRICE. CONTRACTOR SHALL SUBMIT TO THE EPCOR OR EPCOR'S REPRESENTATIVE FOR REVIEW AND APPROVAL (PRIOR TO ORDERING MATERIALS) COPIES OF EQUIPMENT SHOP DRAWINGS AS FOLLOWS: 1) LIGHT FIXTURES, 2) PUMP CONTROL PANEL 3) RTU/PLC 4) SERVICE ENTRANCE SECTION, 5) ELECTRICAL EQUIPMENT, 6) DISCONNECT SWITCHES, 7) TIME CLOCKS AND OTHER CONTROLS, 8) LIGHTING CONTACTORS AND 9) PULL BOXES. AT THE TIME OF EACH SUBMITTAL, THE CONTRACTOR SHALL DEFINE AND DELINEATE IN WRITING ANY DEVIATIONS FROM THE CONTRACT DOCUMENTS. THE REVIEW WILL BE ONLY FOR CONFORMANCE WITH THE DESIGN CONCEPT OF THE WORK AND FOR COMPLIANCE WITH THE INFORMATION CONTAINED IN THE CONTRACT DOCUMENTS. THE REVIEW OF A SPECIFIED ITEM, AS SUCH, WILL NOT INDICATE REVIEW OF THE ASSEMBLY IN WHICH THE ITEM FUNCTIONS. REVIEW BY THE EPCOR OR EPCOR'S REPRESENTATIVE WILL NOT RELIEVE THE CONTRACTOR FROM RESPONSIBILITY FOR ANY ERRORS OR OMISSIONS IN THE SUBMITTALS NOR FROM HIS RESPONSIBILITY FOR COMPLYING WITH THE CONTRACT DOCUMENTS.

42. THE SUBMITTALS SHALL BE NEATLY GROUPED AND ORGANIZED. PERTINENT INFORMATION SHALL BE HIGHLIGHTED, AND THE SPECIFIC PRODUCT SHALL BE IDENTIFIED. ALL SUBMITTALS SHALL BE COMPLETE, AND PRESENTED IN ONE PACKAGE. THE SUBMITTAL SHALL INCLUDE A COMPLETE LIST OF THE EQUIPMENT AND MATERIALS, INCLUDING THE MANUFACTURER'S NAME, PRODUCT SPECIFICATION, DESCRIPTIVE DATA, TECHNICAL LITERATURE, PERFORMANCE CHARTS, CATALOG CUTS, INSTALLATION INSTRUCTIONS, AND SPARE PART RECOMMENDATIONS FOR EACH DIFFERENT ITEM OF THE EQUIPMENT SPECIFIED.

43. ELECTRICAL CONTRACTOR SHALL HAVE A MINIMUM OF 5 YEARS EXPERIENCE WORKING IN THE WATER/WASTEWATER INDUSTRY AND PROVIDE REFERENCES.

ENGINEER OF RECORD

PACE ADVANCED WATER ENGINEERING
8723 E. VIA DE COMMERCIO, #A–204
SCOTTSDALE, AZ 85258
PHONE: (480) 991–3595
CONTACT: TAYLOR PIERCE
CONTACT: TPIERCE@PACEWATER.COM

PROJECT ADDRESS

TOWN OF JEROME WASTEWATER TREATMENT PLANT
SEWER PLANT ROAD
JEROME, AZ 86331

ELECTRICAL ENGINEER

WRIGHT ENGINEERING CORPORATION
165 EAST CHILTON DRIVE
CHANDLER, AZ 85225
PHONE: (480) 497–5829
CONTACT: JACOB BIELEFELDT
EMAIL: JBIELEFELDT@WRIGHTENGINEERING.US

PRINCIPAL OWNER

TOWN OF JEROME
600 CLARK STREET, P.O. BOX 335
JEROME, AZ 86331

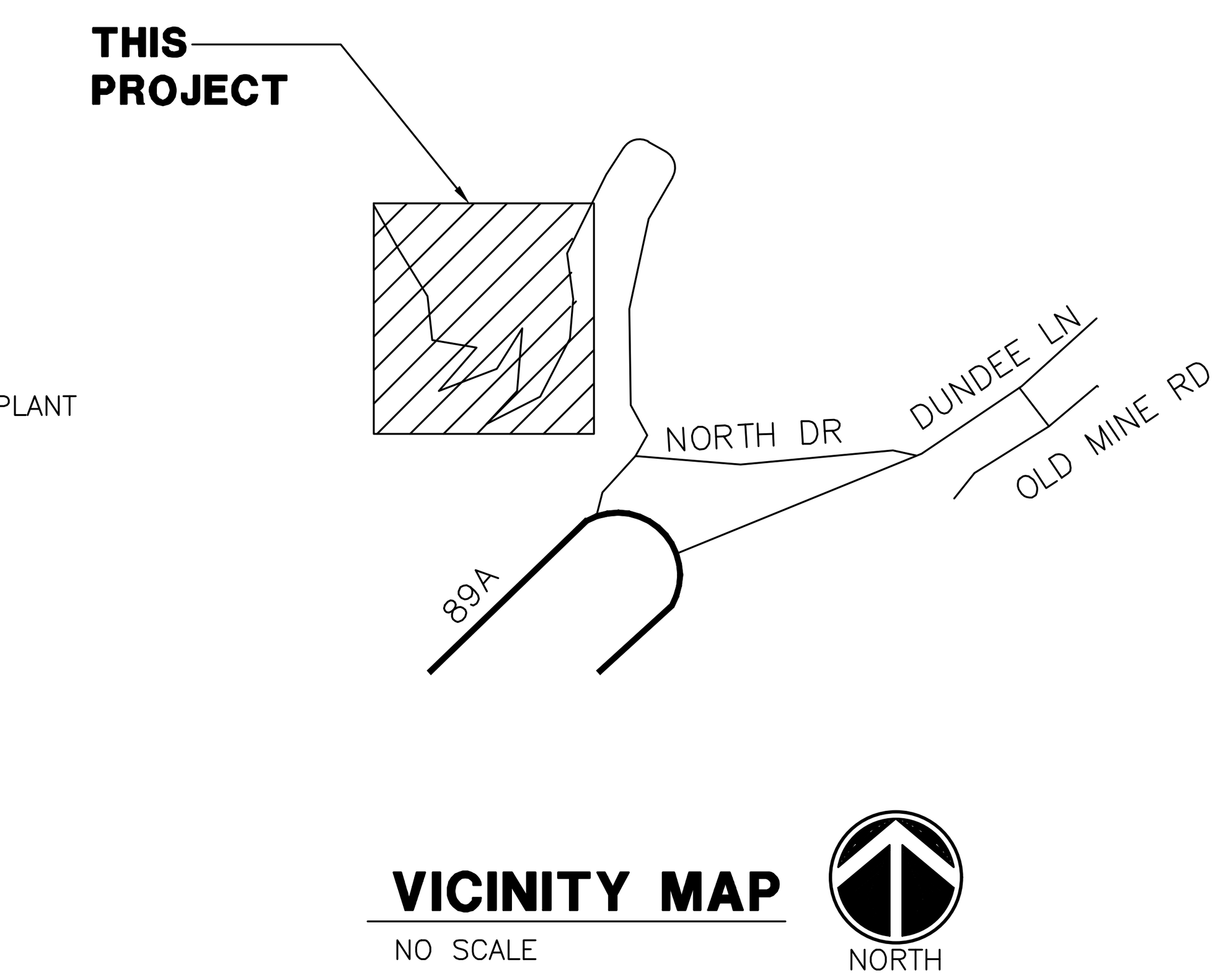

VICINITY MAP
NO SCALE

SHEET INDEX

SHEET E1.1 ELECTRICAL COVER SHEET
SHEET E1.2 ELECTRICAL NOTES + LEGEND
SHEET E2.1 ELECTRICAL SINGLE LINE DIAGRAM I
SHEET E2.2 ELECTRICAL SINGLE LINE DIAGRAM II
SHEET E2.3 ELECTRICAL LOAD CALCULATIONS
SHEET E2.4 ELECTRICAL CONDUIT + WIRE TABLES I
SHEET E2.5 ELECTRICAL CONDUIT + WIRE TABLES II
SHEET E3.1 ELECTRICAL PROPOSED SITE PLAN
SHEET E3.2 ELECTRICAL SBR PLAN
SHEET E3.3 ELECTRICAL DEWATERING PAD
SHEET E3.4 ELECTRICAL BLOWER OPS
SHEET E3.5 ELECTRICAL DRYING BED LIFT STATION
SHEET E3.6 ELECTRICAL OVERFLOW BASIN
SHEET E4.1 ELECTRICAL DETAILS I
SHEET E4.2 ELECTRICAL DETAILS II
SHEET E4.3 ELECTRICAL DETAILS III
SHEET E4.4 ELECTRICAL DETAILS IV
SHEET E4.5 ELECTRICAL DETAILS V
SHEET E4.6 ELECTRICAL DETAILS VI
SHEET E5.1 ELECTRICAL SCHEMATICS I
SHEET E5.2 ELECTRICAL SCHEMATICS II
SHEET E5.3 ELECTRICAL SCHEMATICS III

LIGHT FIXTURE SCHEDULE

SYMBOL	LETTER ID	MANUFACTURER	CATALOG NUMBER	FINISH COLOR	VOLTS	LAMP	LUMENS (MIN)	CCT	MOUNTING HEIGHT	TYPE	DETAIL
	A	LITHONIA LIGHTING	DSX1–LED–P2–30K–80CRI–T5W–MVOLT–PER –SPD20KV–DF–HA–CCE–DBLXD WITH PHOTOCELL, CONTRACTOR SHALL INSTALL IN LINE WITH LIGHT SWITCH TO OVERRIDE.	BLACK	240	68W LED	9,940	3000K	15'–0"	AREA LIGHT	POLE MOUNTED, SEE DETAIL D SHEET SE4.1
	B	LITHONIA LIGHTING	2VTL2–48L–ADP–LP940–BDP	WHITE	120	38.3W LED	4,116	4000K	*	BUILDING CEILING TROFFER 2X2	*CEILING MOUNTED, COORDINATE SURFACE TYPE BY OTHERS.
	C	LITHONIA LIGHTING	WDGE2 LED–P4 30K–80CRI–TFTM–MVOLT–PE–CCE–PIR–DBLXD– (2 OVER DOOR SHALL HAVE BATTERY BACK UP E10WH), CONTRACTOR SHALL INSTALL IN LINE WITH LIGHT SWITCH TO OVERRIDE.	BLACK	120	47W LED	4,002	3000K	*	BUILDING WALLPACK LIGHT	*WALL MOUNTED, 1 FOOT ABOVE DOOR
	D	LITHONIA LIGHTING	FEX–L24–9000LM–FGFL–WD–MVOLT–30K–90 CRI–SPD10KV–IP67–DNAXD CR	BLACK	120	62.5W LED	6,424	3000K	*	CANOPY LIGHT	*CEILING
	E	LITHONIA LIGHTING	AFF–OEL–DWHGXD–UVOLT–LTP–SDRT–FCT–	BLACK	120	2.5W LED	N/A	N/A	*	EMERGENCY EXIT LIGHT	*WALL MOUNTED ABOVE DOOR.
	F	WAC LIGHTING	WS–180137–30K–90–2130	MATCH WATER FAUCET FIXTURE FINISH	120	28W LED	2,130	3000K	*	BUILDING RESTROOM LIGHT	*WALL MOUNTED ABOVE MIRROR.
	G	HOLOPHANE	HPFS–P3–55PG–MVOLT–30K–YMS–20KV–CN P123FT–UBV–DBLXD	BLACK	240	83W LED	12,627	3000K	*	SBR CATWALK FLOODLIGHT, CLASS 1 DIVISION 2	*SEE DETAIL.

NOTE: CONTRACTOR SHALL VERIFY ARCHITECTURE ELEMENTS FOR MOUNTING AND INSTALLATION PRIOR TO ORDERING. CONTRACTOR MAY SUBMIT ALTERNATIVES FOR ENGINEER APPROVED EQUAL.

ISSUED FOR BID

WRIGHT engineering corporation
ELECTRICAL ENGINEERING AND DESIGN
165 EAST CHILTON DRIVE
CHANDLER, ARIZONA 85225
PHONE: 480.497.5829
FAX: 480.497.5807
www.wrightengineering.us
Wright Project # 23319

CALL TWO WORKING DAYS BEFORE YOU DIG
602-263-1100
1-800-STAKE-IT
(OUTSIDE MARICOPA COUNTY)

NO	BY	DATE	REVISIONS	DATE	APP.

Registered Professional Engineer (Electrical) Certificate No. 73954 JACOB BIELEFELDT Date Signed 11-24-2025 Expires 9–30–27

PREPARED BY: WRIGHT ENGINEERING
DESIGNED BY: JHB
DRAWN BY: XAG
CHECKED BY: JHB SCALE: AS NOTED
DATE NOV 2025
JOB NO. B614

TITLE: ELECTRICAL COVER SHEET

JOB: TOWN OF JEROME WASTEWATER TREATMENT PLANT
YAVAPAI CO. AZ

PREPARED BY: PACE Advanced Water Engineering
8723 E. VIA de COMMERICO, SUITE A-204 | SCOTTSDALE, CA 85258
P: (408) 991-3595 | www.pacewater.com

SHEET E1.1
71 OF 99 SHEETS
JOB NO. B614

THESE DRAWINGS ARE THE PROPERTY OF P.A.C.E. AND SHALL NOT BE REPRODUCED IN ANY MANNER NOR BE USED FOR CONSTRUCTION UNLESS STAMPED "ISSUED FOR CONSTRUCTION".

H:\2023\23319-Jerome WWTP\23319-E.dwg - Tab: E1.1 - by jacobb on 11/24/25 at 6:56:46 PM

ELECTRICAL SYMBOLS

SINGLE LINE DIAGRAMS

- (A) AMMETER
- (V) VOLTMETER
- (M) METER
- (KWH) KILOWATT HOUR METER
- AS AMMETER SWITCH
- VS VOLTMETER SWITCH
- GFP GROUND FAULT PROTECTION
- POWER TRANSFORMER SEE NOTE 1.
- A-24 CIRCUIT BREAKER, 3 POLE UNLESS OTHERWISE INDICATED
- DISCONNECT SWITCH, 3 POLE UNLESS OTHERWISE INDICATED
- OIL FUSE CUTOUTS
- FUSE SEE NOTE 3.
- TRANSFER SWITCH, AUTOMATIC
- RV SIZE 1 MAGNETIC MOTOR STARTER."1" INDICATES SIZE 1. RV INDICATES REDUCED VOLTAGE. 2S INDICATES 2 SPEED. R INDICATES REVERSING.
- MAGNETIC CONTACTOR
- (12) CONDUIT NUMBER 12. SEE CONDUIT AND WIRING SCHEDULE FOR SIZES AND QUANTITIES OF CONDUIT AND WIRES.
- GND GROUND
- K KIRK KEY INTERLOCKING OF EQUIPMENT
- 2 HP EQUIPMENT FURNISHED, INSTALLED AND CONNECTED UNDER ANOTHER SECTION OF THE CONTRACT.
- PFR PHASE FAILURE RELAY
- SA SURGE ARRESTER
- (#) EXISTING MOTOR (HP SHOWN)
- (#) NEW MOTOR (ESTIMATED HP SHOWN)
- (#) FUTURE MOTOR (ESTIMATED HP SHOWN)
- (1) MANHOLE
- EYS SEAL

NOTES: (ELECTRICAL SYMBOLS)

1. POWER TRANSFORMERS SHALL BE DRY TYPE 480-208Y/120 VOLTS, 3 PHASE 4 WIRE UNLESS OTHERWISE INDICATED.
2. CONTROL TRANSFORMER SHALL BE DRY TYPE 480-120 VOLTS 1 PHASE UNLESS OTHERWISE INDICATED. SEE CONTROL WIRING DIAGRAMS FOR USE OF 120 VOLT CONTROL CIRCUITS CONTROL TRANSFORMERS SHALL BE SIZED TO HANDLE THE LOADS OF ALL RELAYS, PILOT LIGHTS, ETC. CONNECTED THERE TO PLUS 50 VA EXTRA CAPAOWNER.
3. LOCATED IN OR ON MOTOR CONTROL CENTER UNLESS OTHERWISE INDICATED.

CONTROL WIRING DIAGRAMS

NORMALLY OPEN | NORMALLY CLOSED | DEVICE

- CONTACT
- LIMIT SWITCH
- LIMIT SWITCH HELD CLOSED
- LIMIT SWITCH HELD OPEN
- PRESSURE OR VACUUM SWITCH
- LIQUID LEVEL SWITCH
- TEMPERATURE ACTUATED SWITCH
- FLOW SWITCH (AIR, WATER, ETC.)
- PUSH BUTTON SINGLE CIRCUIT MOMENTARY CONTACT. SEE NOTE 3.
- PUSH BUTTON SINGLE CIRCUIT LOCK-OUT(LOCATED AT MOTOR UNLESS OTHERWISE NOTED)
- TIMED CONTACT- CONTACT ACTION RELAY ON ENERGIZATION.
- TIMED CONTACT- CONTACT ACTION RELAY ON DE-ENERGIZATION.
- ON-OFF SWITCH. SEE NOTE 3.
- ESB EMERGENCY STOP PUSH BUTTON (MAINTAINED CONTACT)
- STOP START STOP -START PUSH-BUTTON STATION (MAINTAINED CONTACTS). SEE NOTE 3.
- H O A HAND-OFF-AUTO SELECTOR SWITCH SEE NOTE 3. (THREE POSITION).
- TWO POSITION SELECTOR SWITCH SEE NOTE 3.
- (R) PILOT LIGHT, Y=YELLOW, R=RED, A=AMBER, SEE NOTE 3. B=BLUE, W=WHITE, G=GREEN.
- BELL
- HORN OR SIREN
- (CR) CONTROL RELAY SEE NOTE 3.
- (M) STARTER COIL. SEE NOTE 3.
- (TDR) TIME DELAY RELAY. (0-30 SECONDS UNLESS OTHERWISE NOTED). SEE NOTE 3.
- OL'S MOTOR STARTER OVERLOAD RELAY CONTACTS
- CONTROL TRANSFORMER. SEE NOTES 2
- MANUAL MOTOR STARTER
- SOLENOID OPERATED CONTROL VALVE
- (1) 120 VOLT, 1 PHASE, MOTOR (UNLESS OTHERWISE NOTED)
- (RTM) RUNNING TIME METER. SEE NOTE 3. (ELAPSED TIME METER)
- SPACE HEATERS. (LOCATED AT MOTOR UNLESS OTHERWISE NOTED).
- TERMINALS IN MOTOR CONTROL CENTER/MCP; CONTACT OR DEVICE REMOTE FROM MOTOR CONTROL CENTER/MCP
- TERMINALS IN MOTOR CONTROL CENTER/MCP; CONTACT IN MOTOR CONTROL CENTER FOR CONNECTION TO REMOTE DEVICE/MCP
- DEVICE SIGNAL OUTPUT
- DEVICE SIGNAL INPUT

PLANS

- CONDUIT RUN CONCEALED UNDER SLAB OR BELOW GRADE. (CONCEALED IN SLAB WHERE SO NOTED OR WHERE ALLOWED PER SPECIFICATIONS).
- CONDUIT RUN EXPOSED UNLESS OTHERWISE NOTED
- EXISTING CONDUIT RUN
- HASH MARKS INDICATE QUANTITY OF #12 WIRES IN CONDUIT (PLUS 1#12 GROUND WIRE) EXCEPT NO HASH MARKS=3/4", 2#12 (PLUS 1#12 GROUND WIRE) UNLESS OTHERWISE NOTED.
  - 3/4", 3#12; 1", 6#12
  - 3/4", 4#12; 1", 7#12
  - 3/4", 5#12; 1", 8#12
- L(1,3) HOMERUN TO PANEL L, CIRCUITS 1 AND 3
- GROUND WIRE
- CONDUIT UP (OUT TOP OF EQUIPMENT)
- CONDUIT DOWN (OUT BOTTOM OF EQUIPMENT)
- CONDUIT STUBBED OUT AND CAPPED
- LIGHTING FIXTURE MOUNTED ON POLE OR POST OR ABOVE PLATFORM
- CEILING MOUNTED LIGHTING FIXTURE
- BRACKET MOUNTED LIGHTING FIXTURE
- FLOODLIGHT
- FLUORESCENT LIGHTING FIXTURE
- POLE MOUNTED LIGHT FIXTURE
- EXIT LIGHT
- RECESSED LIGHTING FIXTURE
- LIGHTING FIXTURES CONNECTED TO EMERGENCY CIRCUITS
- A 1/100 LIGHTING FIXTURE TYPE A, 100 WATTS, WITH 1 LAMP. SEE LIGHTING FIXTURE SCHEDULE
- \$ SINGLE POLE, SINGLE THROW TOGGLE SWITCH
- $\$_2$ DOUBLE POLE, SINGLE THROW TOGGLE SWITCH
- $\$_3$ THREE-WAY TOGGLE SWITCH
- $\$_4$ FOUR-WAY TOGGLE SWITCH
- $\$_M$ MANUAL MOTOR STARTER
- (switches above: AT +48" OR AS NOTED)
- $\$_a$ OUTLETS SHOWN WITH SUBSCRIPT "a" ADJACENT TO THEM SHALL BE CONTROLLED BY S a
- DUPLEX CONVENIENCE RECEPTACLE AT +12" OR AS NOTED
- SINGLE CONVENIENCE RECEPTACLE AT +12" OR AS NOTED
- SPECIAL PURPOSE RECEPTACLE AT +12" OR AS NOTED, RATING AS INDICATED
- JUNCTION BOX, SIZE AS REQUIRED BY CODE
- THERMOSTAT OUTLET AT +54"
- CLOCK OUTLET AT +7'-6" OR AS NOTED
- TELEPHONE OUTLET AT +12" OR AS NOTED
- TELEPHONE FLOOR OUTLET
- HORN
- P CONTROL DEVICE
  - P = PRESSURE SWITCH
  - ZS = LIMIT SWITCH
  - L = LEVEL SWITCH
  - V = CONTROL VALVE
- CONTROL STATION: PUSH-BUTTON STATION OR SELECTOR SWITCH. SEE CONTROL WIRING DIAGRAMS FOR REQUIREMENTS.
- (M) EXISTING MOTOR
- (M) NEW MOTOR
- (M) FUTURE MOTOR
- GROUND WELL
- GROUND ROD
- DISCONNECT SWITCH. SEE SINGLE LINE DIAGRAM FOR SIZE.
- LIGHTING PANEL. SURFACE MOUNTED.
- SWITCHBOARD, DISTRIBUTION PANEL OR MOTOR CONTROL CENTER
- (12) CONDUIT NUMBER 12. SEE CONDUIT AND WIRING SCHEDULE FOR SIZES AND QUANTITIES OF CONDUIT AND WIRES.
- +12" INDICATES HEIGHT FROM FINISHED FLOOR OR GRADE TO CENTERLINE OF DEVICE.
- (1) INDICATES TO REFER TO NOTE (1) ON DRAWING
- W.P. WEATHERPROOF. PROVIDE GASKETS AS REQUIRED
- C.O. CONDUIT ONLY
- FE-184 INSTRUMENTATION DEVICE. SEE PROCESS AND INSTRUMENTATION DRAWINGS FOR DESCRIPTIONS.
- PULL BOX (SIZE AS REQUIRED)
- OUTPUT TERMINAL
- INPUT TERMINAL

CONSTRUCTION NOTES

(1) REMOVE ALL EXISTING CUSTOMER OWNED OVERHEAD ELECTRICAL AND POWER POLE AND DISPOSE OF PROPERLY. COORDINATE WITH OWNER FOR SCHEDULING.

(2) REMOVE EXISTING SES AND PANEL AND DISPOSE OF PROPERLY. COORDINATE DISCONNECTION OF THE METER AND SECONDARY CONDUCTORS WITH APS

(3) DE-ENERGIZE EXISTING LAB BUILDING UPON COMPLETION OF CONSTRUCTION OF THE NEW LAB. REMOVE ALL EXISTING CONDUCTORS AND ELECTRICAL EQUIPMENT AND DISPOSE OF PROPERLY. COORDINATE ALL WORK WITH OWNER AND POWER COMPANY PRIOR TO DE-ENERGIZATION.

(4) COORDINATE WITH APS TO REPLACE THE EXISTING POLE MOUNTED SINGLE PHASE TRANSFORMER. APS TO INSTALL THREE PHASE TRANSFORMERS. CONTRACTOR SHALL VERIFY LOCATION OF NEW TRANSFORMER WITH APS. APS PLANS WILL DETERMINE EXACT LOCATION AND TAKE PRECEDENCE OVER THESE DRAWINGS. COORDINATE ALL WORK WITH APS.

(5) APS SERVICE LINE. TRENCH AND INSTALL CONDUIT PER APS SPECIFICATIONS. POWER COMPANY PLANS WILL DETERMINE EXACT LOCATION OF CONDUIT AND TAKE PRECEDENCE OVER THESE DRAWINGS.

(6) SES, 400 AMP, 277/480V, 3Ø, 4W, SEE DETAIL 1 ON E4.1.

(7) MINI-POWER ZONE AND PANELBOARD. SEE DETAIL 1 ON E4.1.

(8) ATS 400A 277/480V, 3Ø, 4W, SEE DETAIL 2 ON SHEET E4.1.

(9) GENERATOR 125KW, 277/480V, 3Ø, 4W, SEE DETAIL 1 ON E4.3.

(10) TRANSFORMER 50KVA 480V – 120/240V 1Ø, SEE DETAIL 2 ON SHEET E4.1.

(11) PANELBOARD, 120/240V, 1Ø, 3W, SEE DETAIL 2 ON E4.1.

(12) DISTRIBUTION PANEL DSP-1 400A 277/480V, 3Ø, 4W, SEE DETAIL 2 ON SHEET E4.1.

(13) ELECTRICAL CONTRACTOR SHALL INSTALL POWER FEED TO MINI SPLIT AIR CONDITIONER AND HEAT PUMP & MAKE ALL 240V CONNECTIONS.

(14) TANKLESS WATER HEATER & DISCONENCT. ELECTRICAL CONTRACTOR SHALL MAKE ALL POWER AND CONTROL CONNECTIONS PER THESE PLANS AND SPECIFICATIONS AND THE MANUFACTURERS REQUIREMENTS.

(15) GROUNDING ELECTRODE CONDUCTORS, GROUND ROD, AND INSPECTION WELL FOR ONLY THE FIRST GROUND ROD, PER SINGLE LINE DIAGRAMS AND DETAILS ON SHEET E4.6.

(16) LIGHTNING PROTECTION SYSTEM, PER NFPA AND DETAIL 6 ON SHEET E4.6

(17) CLASSIFIED SEAL OFF LISTED FOR CLASS 1 DIV 1. LOCATE WITHIN 10 FEET OF CLASSIFIED AREA BOUNDARY. PVC COATED RMS EYS TYPE OR EQUIVALENT. SEAL SHALL HAVE SEALING COMPOUND CHICO, OR EQUAL.

(20) 20A HEADWORKS CONTROL PANEL, BY VENDOR CLASS 1 DIVISION 2 LISTED. ELECTRICAL CONTRACTOR SHALL MAKE ALL POWER AND CONTROL CONNECTIONS PER THESE PLANS AND SPECIFICATIONS AND THE MANUFACTURERS REQUIREMENTS. SEE DETAIL 1 ON SHEET E4.4.

(21) INFLUENT COARSE SCREEN MOTOR. ELECTRICAL CONTRACTOR SHALL MAKE ALL POWER AND CONTROL CONNECTIONS PER THESE PLANS AND SPECIFICATIONS AND THE MANUFACTURERS REQUIREMENTS.

(22) INFLUENT CONVEYOR MOTOR. ELECTRICAL CONTRACTOR SHALL MAKE ALL POWER AND CONTROL CONNECTIONS PER THESE PLANS AND SPECIFICATIONS AND THE MANUFACTURERS REQUIREMENTS.

(23) POTABLE SOLENOID VALVE AT HEADWORKS. ELECTRICAL CONTRACTOR SHALL MAKE ALL POWER AND CONTROL CONNECTIONS PER THESE PLANS AND SPECIFICATIONS AND THE MANUFACTURERS REQUIREMENTS.

(24) ULTRASONIC LEVEL TRANSDUCER. ELECTRICAL CONTRACTOR SHALL MAKE ALL POWER AND CONTROL CONNECTIONS PER THESE PLANS AND SPECIFICATIONS AND THE MANUFACTURERS REQUIREMENTS.

(30) SBR PANEL BY VENDOR, ELECTRICAL CONTRACTOR SHALL MAKE ALL POWER AND CONTROL CONNECTIONS PER THESE PLANS AND SPECIFICATIONS AND THE MANUFACTURERS REQUIREMENTS.

(31) SBR INFLUENT VALVE. ELECTRICAL CONTRACTOR SHALL MAKE ALL POWER AND CONTROL CONNECTIONS PER THESE PLANS AND SPECIFICATIONS AND THE MANUFACTURERS REQUIREMENTS.

(32) SBR SUBMERSIBLE MIXER. ELECTRICAL CONTRACTOR SHALL MAKE ALL POWER AND CONTROL CONNECTIONS PER THESE PLANS AND SPECIFICATIONS AND THE MANUFACTURERS REQUIREMENTS.

(33) WAS TRANSFER PUMP. ELECTRICAL CONTRACTOR SHALL MAKE ALL POWER AND CONTROL CONNECTIONS PER THESE PLANS AND SPECIFICATIONS AND THE MANUFACTURERS REQUIREMENTS.

(34) DECANT MOTOR. ELECTRICAL CONTRACTOR SHALL MAKE ALL POWER AND CONTROL CONNECTIONS PER THESE PLANS AND SPECIFICATIONS AND THE MANUFACTURERS REQUIREMENTS.

(35) SBR DECANT VALVE. ELECTRICAL CONTRACTOR SHALL MAKE ALL POWER AND CONTROL CONNECTIONS PER THESE PLANS AND SPECIFICATIONS AND THE MANUFACTURERS REQUIREMENTS.

(36) DO TRANSMITTER AND ANALYZER. ELECTRICAL CONTRACTOR SHALL MAKE ALL POWER AND CONTROL CONNECTIONS PER THESE PLANS AND SPECIFICATIONS AND THE MANUFACTURERS REQUIREMENTS.

(37) SUBMERSIBLE PRESSURE TRANSDUCER. ELECTRICAL CONTRACTOR SHALL MAKE ALL POWER AND CONTROL CONNECTIONS PER THESE PLANS AND SPECIFICATIONS AND THE MANUFACTURERS REQUIREMENTS.

(38) LEVEL FLOAT. ELECTRICAL CONTRACTOR SHALL MAKE ALL POWER AND CONTROL CONNECTIONS PER THESE PLANS AND SPECIFICATIONS AND THE MANUFACTURERS REQUIREMENTS.

(39) SBR MOTOR CONTROL PANEL, PROVIDE AND INSTALL. ELECTRICAL CONTRACTOR SHALL MAKE ALL POWER AND CONTROL CONNECTIONS PER THESE PLANS AND SPECIFICATIONS AND THE MANUFACTURERS REQUIREMENTS.

(40) SBR EFFLUENT VALVE. ELECTRICAL CONTRACTOR SHALL MAKE ALL POWER AND CONTROL CONNECTIONS PER THESE PLANS AND SPECIFICATIONS AND THE MANUFACTURERS REQUIREMENTS.

(41) FLOW METER. ELECTRICAL CONTRACTOR SHALL MAKE ALL POWER AND CONTROL CONNECTIONS PER THESE PLANS AND SPECIFICATIONS AND THE MANUFACTURERS REQUIREMENTS.

(42) SBR AIR VALVE. ELECTRICAL CONTRACTOR SHALL MAKE ALL POWER AND CONTROL CONNECTIONS PER THESE PLANS AND SPECIFICATIONS AND THE MANUFACTURERS REQUIREMENTS.

(50) VARIABLE FREQUENCY DRIVE. ELECTRICAL CONTRACTOR SHALL MAKE ALL POWER AND CONTROL CONNECTIONS PER THESE PLANS AND SPECIFICATIONS AND THE MANUFACTURERS REQUIREMENTS.

(51) SBR AERATION BLOWER WITH INTEGRAL DISCONNECT. ELECTRICAL CONTRACTOR SHALL MAKE ALL POWER AND CONTROL CONNECTIONS PER THESE PLANS AND SPECIFICATIONS AND THE MANUFACTURERS REQUIREMENTS.

(52) DIGESTER AERATION BLOWER WITH INTEGRAL DISCONNECT. ELECTRICAL CONTRACTOR SHALL MAKE ALL POWER AND CONTROL CONNECTIONS PER THESE PLANS AND SPECIFICATIONS AND THE MANUFACTURERS REQUIREMENTS.

(53) PRESSURE TRANSDUCER. ELECTRICAL CONTRACTOR SHALL MAKE ALL POWER AND CONTROL CONNECTIONS PER THESE PLANS AND SPECIFICATIONS AND THE MANUFACTURERS REQUIREMENTS.

(54) TEMPERATURE TRANSDUCER. ELECTRICAL CONTRACTOR SHALL MAKE ALL POWER AND CONTROL CONNECTIONS PER THESE PLANS AND SPECIFICATIONS AND THE MANUFACTURERS REQUIREMENTS.

(60) 20A SLUDGE BAGGING SYSTEM CONTROL PANEL, BY VENDOR. ELECTRICAL CONTRACTOR SHALL MAKE ALL POWER AND CONTROL CONNECTIONS PER THESE PLANS AND SPECIFICATIONS AND THE MANUFACTURERS REQUIREMENTS.

(61) POTABLE WATER VALVE. ELECTRICAL CONTRACTOR SHALL MAKE ALL POWER AND CONTROL CONNECTIONS PER THESE PLANS AND SPECIFICATIONS AND THE MANUFACTURERS REQUIREMENTS.

(62) POLYMER METERING PUMP. ELECTRICAL CONTRACTOR SHALL MAKE ALL POWER AND CONTROL CONNECTIONS PER THESE PLANS AND SPECIFICATIONS AND THE MANUFACTURERS REQUIREMENTS.

(63) DRY POLYMER MIXER. ELECTRICAL CONTRACTOR SHALL MAKE ALL POWER AND CONTROL CONNECTIONS PER THESE PLANS AND SPECIFICATIONS AND THE MANUFACTURERS REQUIREMENTS.

(64) DEWATERING FEED PUMP. ELECTRICAL CONTRACTOR SHALL MAKE ALL POWER AND CONTROL CONNECTIONS PER THESE PLANS AND SPECIFICATIONS AND THE MANUFACTURERS REQUIREMENTS.

(70) 30A DRYING BED LIFT PUMP CONTROL PANEL, 480V, 3Ø, 4W. ELECTRICAL CONTRACTOR SHALL MAKE ALL POWER AND CONTROL CONNECTIONS PER THESE PLANS AND SPECIFICATIONS AND THE MANUFACTURERS REQUIREMENTS. SEE DETAIL 1 ON SHEET E4.4.

(71) DRYING BED LIFT PUMP. ELECTRICAL CONTRACTOR SHALL MAKE ALL POWER AND CONTROL CONNECTIONS PER THESE PLANS AND SPECIFICATIONS AND THE MANUFACTURERS REQUIREMENTS. SEE DETAIL 4 ON SHEET E4.5.

(72) LEVEL FLOAT. ELECTRICAL CONTRACTOR SHALL MAKE ALL POWER AND CONTROL CONNECTIONS PER THESE PLANS AND SPECIFICATIONS AND THE MANUFACTURERS REQUIREMENTS. SEE DETAIL 4 ON SHEET E4.5.

(80) OVERFLOW LIFT PUMP CONTROL PANEL, BY VENDOR. 240V, 1Ø, 3W. ELECTRICAL CONTRACTOR SHALL MAKE ALL POWER AND CONTROL CONNECTIONS PER THESE PLANS AND SPECIFICATIONS AND THE MANUFACTURERS REQUIREMENTS. SEE DETAIL 1 ON SHEET E4.4.

(81) OVERFLOW LIFT PUMP. ELECTRICAL CONTRACTOR SHALL MAKE ALL POWER AND CONTROL CONNECTIONS PER THESE PLANS AND SPECIFICATIONS AND THE MANUFACTURERS REQUIREMENTS. SEE DETAIL 4 ON SHEET E4.5.

(82) LEVEL FLOAT. ELECTRICAL CONTRACTOR SHALL MAKE ALL POWER AND CONTROL CONNECTIONS PER THESE PLANS AND SPECIFICATIONS AND THE MANUFACTURERS REQUIREMENTS. SEE DETAIL 4 ON SHEET E4.5.

(90) JOINT TRENCH WITH WATER LINES. MAINTAIN 24-INCH SEPARATION. SEE DETAIL 3 ON SHEET E4.3.

(91) STACKED #7 CONCRETE PULL BOX. INSTALL AS SHOWN OR AS NEEDED IF CONDUIT RUNS WILL EXCEED 360 DEGREE OF BENDS OR THE LENGTH EXCEEDS 400 FEET. INSTALL 1 FOR POWER AND 1 FOR CONTROL. SEE DETAIL 5 ON SHEET E4.3.

(92) STANCHION MOUNTED NEMA 4X SST JUNCTION BOXES. MAINTAIN 3' CLEARANCE IN FRONT OF EQUIPMENT. EXTRA SLACK SHALL REMAIN IN THE J-BOX FOR FUTURE LEVEL ADJUSTMENT. SEE DETAIL 2 ON SHEET E4.2 AND DETAIL 1 ON SHEET E4.4.

(93) TRAFFIC BOLLARD TO BE INSTALLED PER CIVIL PLANS. LOCATE OUT OF 4 FOOT WORKING SPACE ENVELOPE PER NEC.

(94) NON-FUSED DISCONNECT, NEMA 4X FOR OUTDOOR AND CLASS 1 DIV 1 WITHIN CLASSIFIED BOUNDARY. IF LOCATION IS ABOVE BOUNDARY, NEMA 4X WITH CLASSIFIED SEAL OFFS IS ACCEPTABLE. PROVIDE PERMANENT LABEL SUITABLE FOR CORROSIVE ENVIRONMENTS AND UV RESISTANT. MATCH LABEL NAMING CONVENTION WITH P&ID. SEE DETAIL 5 ON SHEET E4.2 & SEE DETAIL 1 ON SHEET E4.4.

(95) ROTARY TYPE DISCONNECT, NEMA 4X FOR OUTDOOR AND CLASS 1 DIV 1 WITHIN CLASSIFIED BOUNDARY. IF LOCATION IS ABOVE BOUNDARY, NEMA 4X WITH CLASSIFIED SEAL OFFS IS ACCEPTABLE. PROVIDE PERMANENT LABEL SUITABLE FOR CORROSIVE ENVIRONMENTS AND UV RESISTANT. MATCH LABEL NAMING CONVENTION WITH P&ID. SEE DETAIL 5 ON SHEET E4.2 & SEE DETAIL 1 ON SHEET E4.4.

(96) E-STOP, NEMA 4X FOR OUTDOOR AND CLASS 1 DIV 1 WITHIN CLASSIFIED BOUNDARY. IF LOCATION IS ABOVE BOUNDARY, NEMA 4X WITH CLASSIFIED SEAL OFFS IS ACCEPTABLE. PROVIDE PERMANENT LABEL SUITABLE FOR CORROSIVE ENVIRONMENTS AND UV RESISTANT. MATCH LABEL NAMING CONVENTION WITH P&ID. SEE DETAIL 5 ON SHEET E4.2.

(97) 20A 120V GFCI DUPLEX RECEPTACLE WITH METAL WEATHERPROOF WHILE-IN-USE AND LOCKABLE COVER INSTALLED PER DETAIL 1 ON SHEET E4.2.

(98) 20A 120V GFCI DUPLEX RECEPTACLE WITH METAL WEATHERPROOF WHILE-IN-USE AND LOCKABLE COVER INSTALLED ONTO LIGHT POLE. SEE DETAIL 2 ON SHEET E4.5.

(99) CLASSIFIED AREA VERIFY BOUNDARY WITH THE NFPA. INSTALL ANY PANELS, DISCONNECTS, SPLICES, ARC MAKING EQUIPMENT OUT OF THE BOUNDARY, WHERE NOT POSSIBLE THEN INSTALL CLASS 1 DIV 1 LISTED EQUIPMENT. ALL CONDUIT WITHIN BOUNDARY SHALL BE CLASS 1 DIV 1 OR 2 RATED AS REQUIRED BY THE BOUNDARY. USE PVC COATED THREADED RMC CONDUIT, INSTALL STAINLESS STEEL 316 ENCLOSURES, HARDWARE AND EQUIPMENT WITHIN 10 FEET OF THE BOUNDARY. INSTALL CLASSIFIED SEAL OFFS WITHIN 10 FEET OF THE BOUNDARY, AT A PANEL OR JUNCTION BOX IS PREFERRED.

WRIGHT engineering corporation
ELECTRICAL ENGINEERING AND DESIGN
165 EAST CHILTON DRIVE
CHANDLER, ARIZONA 85225
PHONE: 480.497.5829
FAX: 480.497.5807
www.wrightengineering.us
Wright Project # 23319

CALL TWO WORKING DAYS BEFORE YOU DIG
602-263-1100
1-800-STAKE-IT
(OUTSIDE MARICOPA COUNTY)

ISSUED FOR BID

NO	BY	DATE	REVISIONS	DATE	APP.

Registered Professional Engineer (Electrical) Certificate No. 73954 JACOB BIELEFELDT Date Signed 11-24-2025 Expires 9-30-27

PREPARED BY: WRIGHT ENGINEERING
DESIGNED BY: JHB
DRAWN BY: XAG
CHECKED BY: JHB
SCALE: AS NOTED
DATE: NOV 2025
JOB NO. B614

TITLE: ELECTRICAL NOTES + LEGEND

JOB: TOWN OF JEROME WASTEWATER TREATMENT PLANT, YAVAPAI CO. AZ

PREPARED BY: PACE Advanced Water Engineering
8723 E. VIA de COMMERCIO, SUITE A-204 | SCOTTSDALE, CA 85258
P: (408) 991-3595 | www.pacewater.com

SHEET E1.2
72 OF 99 SHEETS
JOB NO. B614

THESE DRAWINGS ARE THE PROPERTY OF P.A.C.E. AND SHALL NOT BE REPRODUCED IN ANY MANNER NOR BE USED FOR CONSTRUCTION UNLESS STAMPED "ISSUED FOR CONSTRUCTION".

H:\2023\23319-Jerome WWTP\23319-E.dwg - Tab: E1.2 - by jacobb on 11/24/25 at 6:56:46 PM

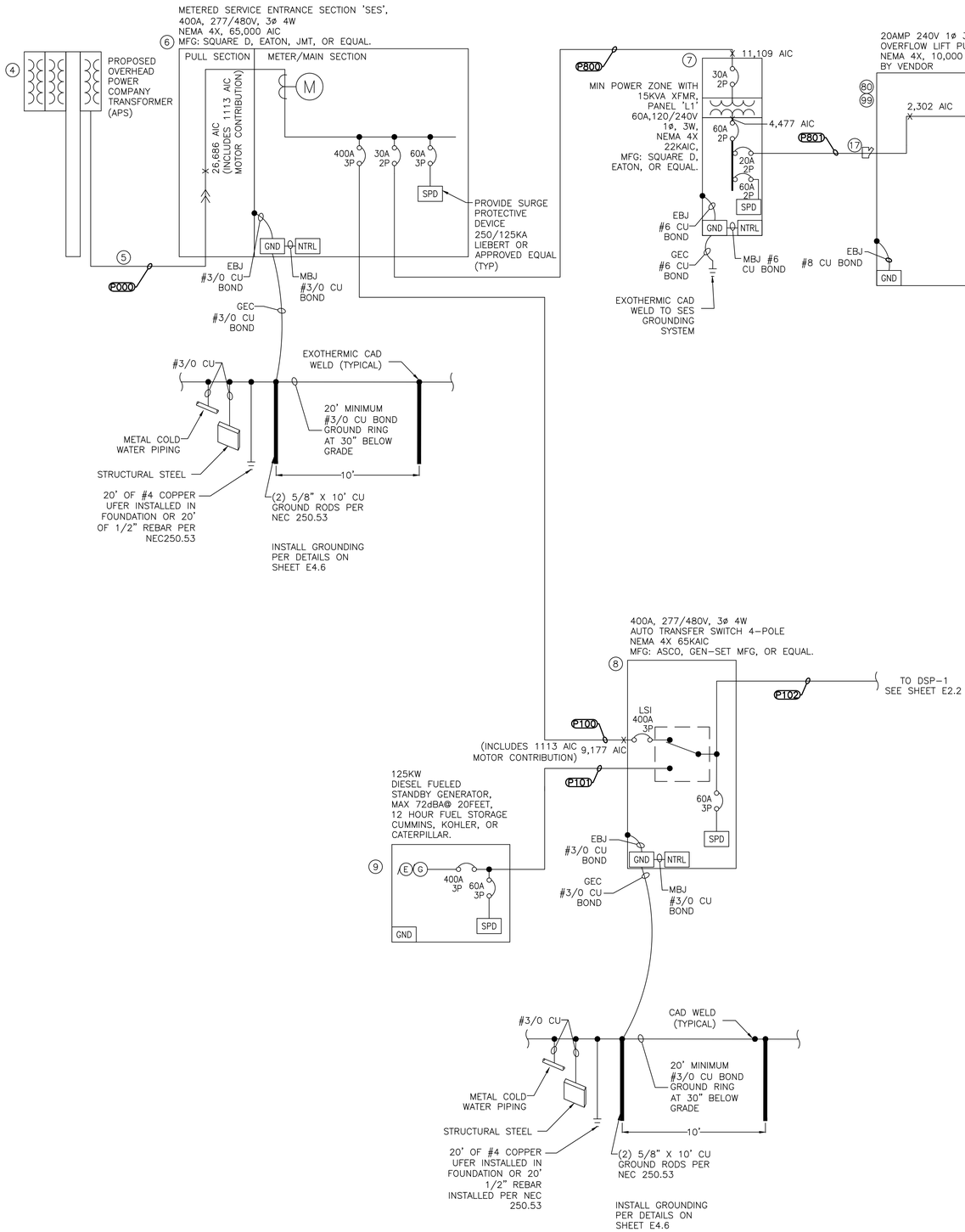

CONSTRUCTION NOTES

4. COORDINATE WITH APS TO REPLACE THE EXISTING POLE MOUNTED SINGLE PHASE TRANSFORMER. APS TO INSTALL THREE PHASE TRANSFORMERS. CONTRACTOR SHALL VERIFY LOCATION OF NEW TRANSFORMER WITH APS. APS PLANS WILL DETERMINE EXACT LOCATION AND TAKE PRECEDENCE OVER THESE DRAWINGS. COORDINATE ALL WORK WITH APS.
5. APS SERVICE LINE. TRENCH AND INSTALL CONDUIT PER APS SPECIFICATIONS. POWER COMPANY PLANS WILL DETERMINE EXACT LOCATION OF CONDUIT AND TAKE PRECEDENCE OVER THESE DRAWINGS.
6. SES, 400 AMP, 277/480V, 3ø, 4W, SEE DETAIL 1 ON E4.1.
7. MINI-POWER ZONE AND PANELBOARD. SEE DETAIL 1 ON E4.1.
8. ATS 400A 277/480V, 3ø, 4W, SEE DETAIL 2 ON SHEET E4.1.
9. GENERATOR 125KW, 277/480V, 3ø, 4W, SEE DETAIL 1 ON E4.3.
17. CLASSIFIED SEAL OFF LISTED FOR CLASS 1 DIV 1. LOCATE WITHIN 10 FEET OF CLASSIFIED AREA BOUNDARY. PVC COATED RMS EYS TYPE OR EQUIVALENT. SEAL SHALL HAVE SEALING COMPOUND CHICO, OR EQUAL.
80. OVERFLOW LIFT PUMP CONTROL PANEL, BY VENDOR. 240V, 1ø, 3W. ELECTRICAL CONTRACTOR SHALL MAKE ALL POWER AND CONTROL CONNECTIONS PER THESE PLANS AND SPECIFICATIONS AND THE MANUFACTURERS REQUIREMENTS. SEE DETAIL 1 ON SHEET E4.4.
81. OVERFLOW LIFT PUMP. ELECTRICAL CONTRACTOR SHALL MAKE ALL POWER AND CONTROL CONNECTIONS PER THESE PLANS AND SPECIFICATIONS AND THE MANUFACTURERS REQUIREMENTS. SEE DETAIL 4 ON SHEET E4.5.
99. CLASSIFIED AREA VERIFY BOUNDARY WITH THE NFPA. INSTALL ANY PANELS, DISCONNECTS, SPLICES, ARC MAKING EQUIPMENT OUT OF THE BOUNDARY, WHERE NOT POSSIBLE THEN INSTALL CLASS 1 DIV 1 LISTED EQUIPMENT. ALL CONDUIT WITHIN BOUNDARY SHALL BE CLASS 1 DIV 1 OR 2 RATED AS REQUIRED BY THE BOUNDARY. USE PVC COATED THREADED RMC CONDUIT. INSTALL STAINLESS STEEL 316 ENCLOSURES, HARDWARE AND EQUIPMENT WITHIN 10 FEET OF THE BOUNDARY. INSTALL CLASSIFIED SEAL OFFS WITHIN 10 FEET OF THE BOUNDARY, AT A PANEL OR JUNCTION BOX IS PREFERRED.

1A SINGLE LINE DIAGRAM
NO SCALE

277/480V 3ø 4W

NO	BY	DATE	REVISIONS	DATE	APP.

Registered Professional Engineer (Electrical) Certificate No. 73954 JASON BELLEDIN Date Signed 9-30-27 Expires 9-30-27

PREPARED BY: WRIGHT ENGINEERING
DESIGNED BY: JHB
DRAWN BY: XAG
CHECKED BY: JHB
SCALE: AS NOTED
DATE: NOV 2025
JOB NO.: B614

THESE DRAWINGS ARE THE PROPERTY OF P.A.C.E. AND SHALL NOT BE REPRODUCED IN ANY MANNER NOR BE USED FOR CONSTRUCTION UNLESS STAMPED "ISSUED FOR CONSTRUCTION".

TITLE: ELECTRICAL SINGLE LINE DIAGRAM I

JOB: TOWN OF JEROME WASTEWATER TREATMENT PLANT YAVAPAI CO. AZ

ISSUED FOR BID

PREPARED BY:
PACE Advanced Water Engineering
8723 E. Via de Commercio, Suite 104, Scottsdale, CA 85258
p. (408) 991-3595 | www.pacewater.com

SHEET E2.1
73 OF 99 SHEETS

JOB NO. B614

WRIGHT engineering corporation
ELECTRICAL ENGINEERING AND DESIGN
165 EAST CHILTON DRIVE
CHANDLER, ARIZONA 85225
PHONE: 480.497.5829
FAX: 480.497.5807
www.wrightengineering.us
Wright Project # 23319

CALL TWO WORKING DAYS BEFORE YOU DIG
602-263-1100
1-800-STAKE-IT
(OUTSIDE MARICOPA COUNTY)

H:\2025\2513-Jerome WW TP\2513-E-Dwg Feb 03 1 - by pedro at 11/4/25 at 8:58:48 PM

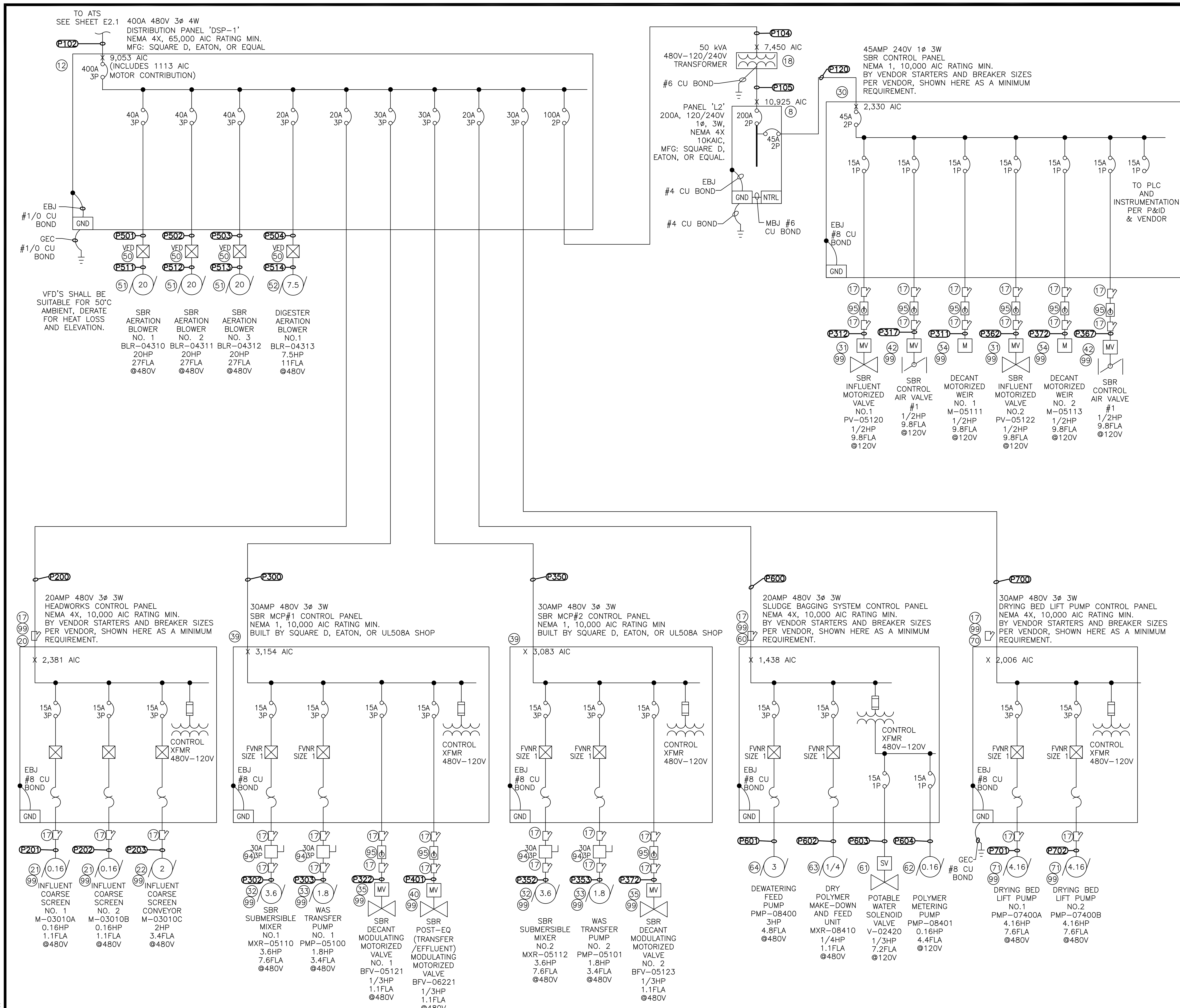

1B SINGLE LINE DIAGRAM
NO SCALE

CONSTRUCTION NOTES

(12) DISTRIBUTION PANEL DSP-1 400A 277/480V, 3ø, 4W, SEE DETAIL 2 ON SHEET E4.1.

(17) CLASSIFIED SEAL OFF LISTED FOR CLASS 1 DIV 1. LOCATE WITHIN 10 FEET OF CLASSIFIED AREA BOUNDARY. PVC COATED RMS EYS TYPE OR EQUIVALENT. SEAL SHALL HAVE SEALING COMPOUND CHICO, OR EQUAL.

(20) 20A HEADWORKS CONTROL PANEL, BY VENDOR CLASS 1 DIVISION 2 LISTED. ELECTRICAL CONTRACTOR SHALL MAKE ALL POWER AND CONTROL CONNECTIONS PER THESE PLANS AND SPECIFICATIONS AND THE MANUFACTURERS REQUIREMENTS. SEE DETAIL 1 ON SHEET E4.4.

(21) INFLUENT COARSE SCREEN MOTOR. ELECTRICAL CONTRACTOR SHALL MAKE ALL POWER AND CONTROL CONNECTIONS PER THESE PLANS AND SPECIFICATIONS AND THE MANUFACTURERS REQUIREMENTS.

(22) INFLUENT CONVEYOR MOTOR. ELECTRICAL CONTRACTOR SHALL MAKE ALL POWER AND CONTROL CONNECTIONS PER THESE PLANS AND SPECIFICATIONS AND THE MANUFACTURERS REQUIREMENTS.

(30) SBR PANEL BY VENDOR, ELECTRICAL CONTRACTOR SHALL MAKE ALL POWER AND CONTROL CONNECTIONS PER THESE PLANS AND SPECIFICATIONS AND THE MANUFACTURERS REQUIREMENTS.

(31) SBR INFLUENT VALVE. ELECTRICAL CONTRACTOR SHALL MAKE ALL POWER AND CONTROL CONNECTIONS PER THESE PLANS AND SPECIFICATIONS AND THE MANUFACTURERS REQUIREMENTS.

(32) SBR SUBMERSIBLE MIXER. ELECTRICAL CONTRACTOR SHALL MAKE ALL POWER AND CONTROL CONNECTIONS PER THESE PLANS AND SPECIFICATIONS AND THE MANUFACTURERS REQUIREMENTS.

(33) WAS TRANSFER PUMP. ELECTRICAL CONTRACTOR SHALL MAKE ALL POWER AND CONTROL CONNECTIONS PER THESE PLANS AND SPECIFICATIONS AND THE MANUFACTURERS REQUIREMENTS.

(34) DECANT MOTOR. ELECTRICAL CONTRACTOR SHALL MAKE ALL POWER AND CONTROL CONNECTIONS PER THESE PLANS AND SPECIFICATIONS AND THE MANUFACTURERS REQUIREMENTS.

(35) SBR DECANT VALVE. ELECTRICAL CONTRACTOR SHALL MAKE ALL POWER AND CONTROL CONNECTIONS PER THESE PLANS AND SPECIFICATIONS AND THE MANUFACTURERS REQUIREMENTS.

(39) SBR MOTOR CONTROL PANEL, PROVIDE AND INSTALL. ELECTRICAL CONTRACTOR SHALL MAKE ALL POWER AND CONTROL CONNECTIONS PER THESE PLANS AND SPECIFICATIONS AND THE MANUFACTURERS REQUIREMENTS.

(40) SBR EFFLUENT VALVE. ELECTRICAL CONTRACTOR SHALL MAKE ALL POWER AND CONTROL CONNECTIONS PER THESE PLANS AND SPECIFICATIONS AND THE MANUFACTURERS REQUIREMENTS.

(42) SBR AIR VALVE. ELECTRICAL CONTRACTOR SHALL MAKE ALL POWER AND CONTROL CONNECTIONS PER THESE PLANS AND SPECIFICATIONS AND THE MANUFACTURERS REQUIREMENTS.

(50) VARIABLE FREQUENCY DRIVE. ELECTRICAL CONTRACTOR SHALL MAKE ALL POWER AND CONTROL CONNECTIONS PER THESE PLANS AND SPECIFICATIONS AND THE MANUFACTURERS REQUIREMENTS.

(51) SBR AERATION BLOWER WITH INTEGRAL DISCONNECT. ELECTRICAL CONTRACTOR SHALL MAKE ALL POWER AND CONTROL CONNECTIONS PER THESE PLANS AND SPECIFICATIONS AND THE MANUFACTURERS REQUIREMENTS.

(52) DIGESTER AERATION BLOWER WITH INTEGRAL DISCONNECT. ELECTRICAL CONTRACTOR SHALL MAKE ALL POWER AND CONTROL CONNECTIONS PER THESE PLANS AND SPECIFICATIONS AND THE MANUFACTURERS REQUIREMENTS.

(60) 20A SLUDGE BAGGING SYSTEM CONTROL PANEL, BY VENDOR. ELECTRICAL CONTRACTOR SHALL MAKE ALL POWER AND CONTROL CONNECTIONS PER THESE PLANS AND SPECIFICATIONS AND THE MANUFACTURERS REQUIREMENTS.

(61) POTABLE WATER VALVE. ELECTRICAL CONTRACTOR SHALL MAKE ALL POWER AND CONTROL CONNECTIONS PER THESE PLANS AND SPECIFICATIONS AND THE MANUFACTURERS REQUIREMENTS.

(62) POLYMER METERING PUMP. ELECTRICAL CONTRACTOR SHALL MAKE ALL POWER AND CONTROL CONNECTIONS PER THESE PLANS AND SPECIFICATIONS AND THE MANUFACTURERS REQUIREMENTS.

(63) DRY POLYMER MIXER. ELECTRICAL CONTRACTOR SHALL MAKE ALL POWER AND CONTROL CONNECTIONS PER THESE PLANS AND SPECIFICATIONS AND THE MANUFACTURERS REQUIREMENTS.

(64) DEWATERING FEED PUMP. ELECTRICAL CONTRACTOR SHALL MAKE ALL POWER AND CONTROL CONNECTIONS PER THESE PLANS AND SPECIFICATIONS AND THE MANUFACTURERS REQUIREMENTS.

(70) 30A DRYING BED LIFT PUMP CONTROL PANEL, 480V, 3ø, 4W. ELECTRICAL CONTRACTOR SHALL MAKE ALL POWER AND CONTROL CONNECTIONS PER THESE PLANS AND SPECIFICATIONS AND THE MANUFACTURERS REQUIREMENTS. SEE DETAIL 1 ON SHEET E4.4.

(71) DRYING BED LIFT PUMP. ELECTRICAL CONTRACTOR SHALL MAKE ALL POWER AND CONTROL CONNECTIONS PER THESE PLANS AND SPECIFICATIONS AND THE MANUFACTURERS REQUIREMENTS. SEE DETAIL 4 ON SHEET E4.5.

(94) NON-FUSED DISCONNECT, NEMA 4X FOR OUTDOOR AND CLASS 1 DIV 1 WITHIN CLASSIFIED BOUNDARY. IF LOCATION IS ABOVE BOUNDARY, NEMA 4X WITH CLASSIFIED SEAL OFFS IS ACCEPTABLE. PROVIDE PERMANENT LABEL SUITABLE FOR CORROSIVE ENVIRONMENTS AND UV RESISTANT. MATCH LABEL NAMING CONVENTION WITH P&ID. SEE DETAIL 5 ON SHEET E4.2 & SEE DETAIL 1 ON SHEET E4.4.

(95) ROTARY TYPE DISCONNECT, NEMA 4X FOR OUTDOOR AND CLASS 1 DIV 1 WITHIN CLASSIFIED BOUNDARY. IF LOCATION IS ABOVE BOUNDARY, NEMA 4X WITH CLASSIFIED SEAL OFFS IS ACCEPTABLE. PROVIDE PERMANENT LABEL SUITABLE FOR CORROSIVE ENVIRONMENTS AND UV RESISTANT. MATCH LABEL NAMING CONVENTION WITH P&ID. SEE DETAIL 5 ON SHEET E4.2 & SEE DETAIL 1 ON SHEET E4.4.

(99) CLASSIFIED AREA VERIFY BOUNDARY WITH THE NFPA. INSTALL ANY PANELS, DISCONNECTS, SPLICES, ARC MAKING EQUIPMENT OUT OF THE BOUNDARY, WHERE NOT POSSIBLE THEN INSTALL CLASS 1 DIV 1 LISTED EQUIPMENT. ALL CONDUIT WITHIN BOUNDARY SHALL BE CLASS 1 DIV 1 OR 2 RATED AS REQUIRED BY THE BOUNDARY. USE PVC COATED THREADED RMC CONDUIT, INSTALL STAINLESS STEEL 316 ENCLOSURES, HARDWARE AND EQUIPMENT WITHIN 10 FEET OF THE BOUNDARY. INSTALL CLASSIFIED SEAL OFFS WITHIN 10 FEET OF THE BOUNDARY, AT A PANEL OR JUNCTION BOX IS PREFERRED.

ISSUED FOR BID

WRIGHT engineering corporation
ELECTRICAL ENGINEERING AND DESIGN
165 EAST CHILTON DRIVE
CHANDLER, ARIZONA 85225
PHONE: 480.497.5829
FAX: 480.497.5807
www.wrightengineering.us
Wright Project # 23319

CALL TWO WORKING DAYS BEFORE YOU DIG
602-263-1100
1-800-STAKE-IT
(OUTSIDE MARICOPA COUNTY)

NO	BY	DATE	REVISIONS	DATE	APP.

Registered Professional Engineer (Electrical) Certificate No. 73954 JACOB BIELEFELDT Date Signed 11-24-2025 Expires 9-30-27

PREPARED BY: WRIGHT ENGINEERING
DESIGNED BY: JHB
DRAWN BY: XAG
CHECKED BY: JHB

SCALE: AS NOTED
DATE NOV 2025
JOB NO. B614

TITLE: ELECTRICAL SINGLE LINE DIAGRAM II

JOB: TOWN OF JEROME WASTEWATER TREATMENT PLANT
YAVAPAI CO. AZ

PREPARED BY: PACE Advanced Water Engineering
8723 E. VIA de COMMERCIO, SUITE A-204 | SCOTTSDALE, CA 85258
P: (408) 991-3595 | www.pacewater.com

SHEET E2.2
74 OF 99 SHEETS
JOB NO. B614

THESE DRAWINGS ARE THE PROPERTY OF P.A.C.E. AND SHALL NOT BE REPRODUCED IN ANY MANNER NOR BE USED FOR CONSTRUCTION UNLESS STAMPED "ISSUED FOR CONSTRUCTION".

Item I.

SES LOAD CALCULATION SUMMARY

LOAD DESCRIPTION	LOAD	STANDBY
MCC–A	256.6	256.6
PANEL L1	5.0	0
TOTAL AMPS AT 480V 3ø	261.6	256.6
TOTAL KVA AT 480V 3ø	217.5	217.5

MCC LOAD CALCULATION SUMMARY

LOAD DESCRIPTION	LOAD	STANDBY
SBR AERATION BLOWER NO. 1 BLR–04310 (20HP)	27.0	27.0
SBR AERATION BLOWER NO. 2 BLR–04311 (20HP)	27.0	27.0
SBR AERATION BLOWER NO. 3 BLR–04312 (20HP)	27.0	27.0
DIGESTION AERATION BLOWER NO. 1 BLR–04313 (7.5HP)	11.0	11.0
SBR SUBMERSIBLE MIXER NO. 1 MXR–05110 (3.6HP)	7.6	7.6
SBR SUBMERSIBLE MIXER NO. 2 MXR–05112 (3.6HP)	7.6	7.6
WAS TRANSFER PUMP NO. 1 PMP–05100 (1.8HP)	3.4	3.4
WAS TRANSFER PUMP NO. 2 PMP–05101 (1.8HP)	3.4	3.4
SBR DECANT MODULATING VALVE NO. 1 BFV–05121 (1/3HP)	1.1	1.1
SBR DECANT VALVE NO. 2 BFV–05123 (1/3HP)	1.1	1.1
SBR POST–EQ VALVE BFV–05121 (1/3HP)	1.1	1.1
DRYING BED LIFT PUMP CONTROL PANEL	19.1	19.1
HEADWORKS CONTROL PANEL	5.6	5.6
SLUDGE BAGGING SYSTEM CONTROL PANEL	12.1	12.1
PANEL 'L2'	95.7	95.7
25% OF THE LARGEST MOTOR	**6.8**	**6.8**
TOTAL AMPS / 480V 3ø	256.6	256.6
TOTAL KVA AT / ø	213.3	213.3

DRYING BED LIFT PUMP CONTROL PANEL LOAD CALCULATION SUMMARY

LOAD DESCRIPTION	LOAD	STANDBY
DRYING BED LIFT PUMP NO. 1 PMP–07400A (4.16HP)	7.6	7.6
DRYING BED LIFT PUMP NO. 2 PMP–07400B (4.16HP)	7.6	7.6
CONTROL	2.0	2.0
25% OF THE LARGEST MOTOR	1.9	1.9
TOTAL AMPS / 480V 3ø	19.1	19.1
TOTAL KVA AT / ø	15.9	15.9

HEADWORKS CONTROL PANEL LOAD CALCULATION SUMMARY

LOAD DESCRIPTION	LOAD	STANDBY
INFLUENT COARSE SCREEN NO. 1 M–03010A (.16HP)	1.1	1.1
INFLUENT COARSE SCREEN NO. 2 M–03010B (.16HP)	1.1	1.1
INFLUENT COARSE SCREEN CONVERYOR M–03010C (1/2HP)	1.1	1.1
CONTROL	2.0	2.0
25% OF THE LARGEST MOTOR	**0.3**	**0.3**
TOTAL AMPS / 480V 3ø	5.6	5.6
TOTAL KVA AT / ø	4.6	4.6

SLUDGE BAGGING SYSTEM CONTROL PANEL LOAD CALCULATION SUMMARY

LOAD DESCRIPTION	LOAD	STANDBY
DEWATERING FEED PUMP PMP–08400 (3HP)	4.8	4.8
DRY POLYMER MAKE–DOWN AND FEED UNIT MXR–08410 (1/4HP)	1.1	1.1
CONTROL	5.0	5.0
25% OF THE LARGEST MOTOR	**1.2**	**1.2**
TOTAL AMPS / 480V 3ø	12.1	12.1
TOTAL KVA AT / ø	10.1	10.1

SBR CONTROL PANEL LOAD CALCULATION SUMMARY

LOAD DESCRIPTION	LOAD Aø	LOAD Bø	STANDBY
SBR INFLUENT VALVE NO. 1 PV–05120 (1/2HP)	9.8		9.8
SBR INFLUENT VALVE NO. 2 PV–05122 (1/2HP)		9.8	9.8
DECANT MOTOR NO. 1 M–05111 (1/2HP)	9.8		9.8
DECANT MOTOR NO. 2 M–05113 (1/2HP)		9.8	9.8
SBR AIR VALVE #1 (1/2 HP)	9.8		9.8
SBR AIR VALVE #2 (1/2 HP)		9.8	9.8
CONTROL	2.0		2.0
25% OF THE LARGEST MOTOR	**2.5**		**2.5**
TOTAL AMPS / 120V 1ø	33.9	29.4	33.9
TOTAL KVA AT / ø	4.1	3.5	4.1

PANEL NAME: L1			120/240V, 1ø, 3W				60A MAIN BKR		
LOCATION: SEE SITE PLAN			TYPE: PLUG–IN				PEDESTAL MTD., NEMA 4X		
CKT NO.	BKR SIZE	DESCRIPTION	LOAD	Aø	Bø	LOAD	DESCRIPTION	BKR SIZE	CKT NO.
1	20/	OVERFLOW LIFT PUMP MOTOR CONTROL PANEL	1200	1200		0	SPARE	20/1	2
3	/2		1200		1200	0	SPARE	20/1	4
5	20/1	SPARE	0	0		0	SPARE	20/1	6
CODE TOTAL VA/ø				1200	1200	*INDICATES LOAD @ 125%			
CODE TOTAL AMPS/ø				10.0	10.0	22,000 AIC BREAKERS			

PANEL NAME: L2			120/240V, 1ø, 3W				200A MAIN BKR		
LOCATION: BUILDING			TYPE: PLUG–IN				WALL MTD., NEMA 4X		
CKT NO.	BKR SIZE	DESCRIPTION	LOAD	Aø	Bø	LOAD	DESCRIPTION	BKR SIZE	CKT NO.
1	20/1	*BUILDING EXTERIOR LIGHTS	235	435		200	FLOW METER	20/1	2
3	20/1	*LAB LIGHTS + BLOWER ROOM + EM LIGHT	963		5031	4068	SBR CONTROL PANEL	45/	4
5	20/1	BLOWER ROOM + EXTERIOR RECEPTACLE	900	4428		3528		/2	6
7	20/1	*RESTROOM LIGHTS + EXHAUST FAN + RECEPTACLE	420		1620	1200	GENERATOR ON BOARD PANEL	60/	8
9	20/1	LAB RECEPTACLES 3	1080	2280		1200		/2	10
11	20/1	LAB RECEPTACLES 4	1440		7940	6500	LAB TANKLESS WATER HEATER	60/	12
13	20/	*SBR AREA LIGHTING*	302	6802		6500		/2	14
15	/2		302		6802	6500	RR TANKLESS WATER HEATER	60/	16
17	20/	A/C UNIT OUTDOOR	1759	8259		6500		/2	18
19	/2		1759		1759	0	BUSSED SPACE		20
21	20/1	A/C UNIT INDOOR	600	600		0	BUSSED SPACE		22
23		BUSSED SPACE	0		0	0	BUSSED SPACE		24
25		BUSSED SPACE	0	0		0	BUSSED SPACE		26
27		BUSSED SPACE	0		0	0	BUSSED SPACE		28
29		BUSSED SPACE	0	0		0	BUSSED SPACE		30
31		BUSSED SPACE	0		0	0	BUSSED SPACE		32
33		BUSSED SPACE	0	0		0	BUSSED SPACE		34
35		BUSSED SPACE	0		0	0	BUSSED SPACE		36
37		BUSSED SPACE	0	0		0	BUSSED SPACE		38
39		BUSSED SPACE	0		0	0	BUSSED SPACE		40
41		BUSSED SPACE	0	0		0	BUSSED SPACE		42
CODE TOTAL VA/ø				22804	23152	*INDICATES LOAD @ 125%			
CODE TOTAL AMPS/ø				190.0	192.9	22,000 AIC BREAKERS			

WRIGHT engineering corporation
ELECTRICAL ENGINEERING AND DESIGN
165 EAST CHILTON DRIVE
CHANDLER, ARIZONA 85225
PHONE: 480.497.5829
FAX: 480.497.5807
www.wrightengineering.us
Wright Project # 23319

CALL TWO WORKING DAYS BEFORE YOU DIG
602-263-1100
1-800-STAKE-IT
(OUTSIDE MARICOPA COUNTY)

NO	BY	DATE	REVISIONS	DATE	APP.

Registered Professional Engineer (Electrical) Certificate No. 73954 JASON BILLEDT 09-30-27 Expires 9-30-27

PREPARED BY: WRIGHT ENGINEERING
DESIGNED BY: JHB
DRAWN BY: XAG
CHECKED BY: JHB
SCALE: AS NOTED
DATE: NOV 2025
JOB NO.: B614

THESE DRAWINGS ARE THE PROPERTY OF P.A.C.E. AND SHALL NOT BE REPRODUCED IN ANY MANNER NOR BE USED FOR CONSTRUCTION UNLESS STAMPED "ISSUED FOR CONSTRUCTION".

TITLE: ELECTRICAL LOAD CALCULATIONS

JOB: TOWN OF JEROME WASTEWATER TREATMENT PLANT
YAVAPAI CO. AZ

ISSUED FOR BID

PREPARED BY:
PACE
Advanced Water Engineering
8723 E. VIA de COMERCIO, SUITE A, SCOTTSDALE, CA 85258
P: (480) 991-3595 | www.pacewater.com

SHEET
E2.3
75 OF 99 SHEETS

JOB NO. B614

CONDUIT AND WIRE SCHEDULE FOR POWER

CONDUIT NO.	CONDUIT SIZE	WIRE POWER	WIRE GROUND	FROM	TO	REMARKS
POWER COMPANY						
P000	PER POWER COMPANY (APS) PLANS AND SPECIFICATIONS			POWER COMPANY TRANSFORMER	SES	
MAIN POWER						
P100	(2) 3.5"	4-#350KCMIL (2) PARALLEL	1-#3/0 (2) PARALLEL	SES	AUTOMATIC TRANSFER SWITCH	(2) PARALLEL CONDUCTORS TOTAL DISTANCE 1085'
P101	(2)3"	4-#3/0 (2) PARALLEL	1-#2 (2) PARALLEL	GENERATOR	AUTOMATIC TRANSFER SWITCH	(2) PARALLEL CONDUCTORS
P102	(2)3"	4-#3/0 (2) PARALLEL	1-#2 (2) PARALLEL	AUTOMATIC TRANSFER SWITCH	DSP-1	(2) PARALLEL CONDUCTORS
P103	1"	3-#10	1-#10	PANEL 'L2'	GENERATOR'S ON-BOARD PANEL	
P104	1.5"	2-#2	1-#8	DISTRIBUTION PANEL DSP-1	50KVA TRANSFORMER T2	
P105	2"	3-#3/0	1-#6	50KVA TRANSFORMER T2	PANEL 'L2'	
P120	1"	3-#6	1-#10	PANEL 'L2'	SBR PANEL	
P121	1"	2-#12	1-#12	PANEL 'L2'	AREA LIGHT	CKT. L2-7
P122	1"	2-#12	1-#12	PANEL 'L2'	BUILDING MISC.	SEE SITE FOR CKT.
P123	1"	2-#12	1-#12	PANEL 'L2'	SITE RECEPTACLE	CKT. L2-9
P131	1"	PULL ROPE		SEE SITE PLAN		SPARE
P132	2"	PULL ROPE		SEE SITE PLAN		SPARE
P133	3.5"	PULL ROPE		SEE SITE PLAN		SPARE
HEADWORKS STATION						
P200	1"	3-#10	1-#10	DISTRIBUTION PANEL DSP-1	HEADWORKS CONTROL PANEL	
P201	1"	3-#12	1-#12	HEADWORKS STATION CONTROL PANEL	INFLUENT COARSE SCREEN	M-03010A
P202	1"	3-#12	1-#12	HEADWORKS STATION CONTROL PANEL	INFLUENT COARSE SCREEN	M-03010B
P203	1"	3-#12	1-#12	HEADWORKS STATION CONTROL PANEL	INFLUENT COARSE SCREEN CONVEYOR	M-03010C
P204	1"	2-#12	1-#12	HEADWORKS STATION CONTROL PANEL	SOLENOID VALVE	V-02020

CONDUIT AND WIRE SCHEDULE FOR POWER

CONDUIT NO.	CONDUIT SIZE	WIRE POWER	WIRE GROUND	FROM	TO	REMARKS
SEQUENCING BATCH REACTOR						
P300	1"	3-#10	1-#10	DISTRIBUTION PANEL DSP-1	MCP#1	
P301A	1"	3-#12	1-#12	MCP#1	J-BOX P1	MXR-05110
		3-#12	1-#12			PMP-05100
		3-#12	1-#12			BFV-05121
P301B	1"	2-#12	1-#12	SBR CONTROL PANEL		M-05111
		2-#12	1-#12			PV-05120
		2-#12	1-#12			SBR AIR VALVE #1
P302	1"	3-#12	1-#12	J-BOX P1	SBR MIXER #1	MXR-05110
P303	1"	3-#12	1-#12		WAS TRANSFER PUMP #1	PMP-05100
P322	1"	3-#12	1-#12		DECANTER VALVE #1	BFV-05121
P311	1"	2-#12	1-#12		DECANTER #1	M-05111
P312	1"	2-#12	1-#12		SBR INFLUENT VALVE #1	PV-05120
P317	1"	2-#12	1-#12		SBR AIR VALVE #1	
P350	1"	3-#12	1-#12	DISTRIBUTION PANEL DSP-1	MCP#2	
P351A	1"	3-#12	1-#12	MCP#2	J-BOX P2	MXR-05112
		3-#12	1-#12			PMP-05101
		3-#12	1-#12			BFV-05123
P351B	1"	2-#12	1-#12	SBR CONTROL PANEL		M-05113
		2-#12	1-#12			PV-05122
		2-#12	1-#12			SBR AIR VALVE #2
P352	1"	3-#12	1-#12	J-BOX P2	SBR MIXER #2	MXR-05112
P353	1"	3-#12	1-#12		WAS TRANSFER PUMP #2	PMP-05101
P372	1"	3-#12	1-#12		DECANTER VALVE #2	BFV-05123
P361	1"	2-#12	1-#12		DECANTER #2	M-05113
P362	1"	2-#12	1-#12		SBR INFLUENT VALVE #2	PV-05122
P367	1"	2-#12	1-#12		SBR AIR VALVE #2	

CONDUIT AND WIRE SCHEDULE FOR POWER

CONDUIT NO.	CONDUIT SIZE	WIRE POWER	WIRE GROUND	FROM	TO	REMARKS
CHLORINE CONTACT AND DIGESTER						
P400	3"	2-#12	1-#12	PANEL 'L2'	FLOW METER	FM-06240
P401	3"	2-#12	1-#12	DISTRIBUTION PANEL DSP-1	BUTTERFLY VALVE	BFV-06221
BLOWER ROOM						
P501	1"	3-#8	1-#8	DISTRIBUTION PANEL DSP-1	AERATION BLOWER VFD #1	BLR-04310
P511	1"	3-#8	1-#8	AERATION BLOWER VFD #1	BLR-04310	
P502	1"	3-#8	1-#8	DISTRIBUTION PANEL DSP-1	AERATION BLOWER VFD #2	BLR-04311
P512	1"	3-#8	1-#8	AERATION BLOWER VFD #2	BLR-04311	
P503	1"	3-#8	1-#8	DISTRIBUTION PANEL DSP-1	AERATION BLOWER VFD #3	BLR-04312
P513	1"	3-#8	1-#8	AERATION BLOWER VFD #3	BLR-04312	
P504	1"	3-#12	1-#12	DISTRIBUTION PANEL DSP-1	DIGESTION BLOWER VFD #4	BLR-04313
P514	1"	3-#12	1-#12	DIGESTION BLOWER VFD #4	BLR-04313	
DEWATERING						
P600	1"	3-#10	1-#10	DISTRIBUTION PANEL DSP-1	SLUDGE BAGGING SYSTEM CONTROL PANEL	
P601	1"	3-#12	1-#12	SLUDGE BAGGING SYSTEM CONTROL PANEL	DEWATERING FEED PUMP	PMP-08400
P602	1"	3-#12	1-#12	SLUDGE BAGGING SYSTEM CONTROL PANEL	DRY POLYMER MIXING UNIT	MXR-08410
P603	1"	2-#12	1-#12	SLUDGE BAGGING SYSTEM CONTROL PANEL	POTABLE WATER VALVE	V-02420
P604	1"	2-#12	1-#12	SLUDGE BAGGING SYSTEM CONTROL PANEL	POLYMER PUMP	PMP-08401
DRYING BED LIFT STATION						
P700	2"	3-#8	1-#8	DISTRIBUTION PANEL DSP-1	DRYING BED LIFT STATION CONTROL PANEL	TOTAL DISTANCE 225'
P701	1"	3-#12	1-#12	DRYING BED LIFT STATION CONTROL PANEL	DRYING BED LIFT PUMP	PMP-07400A
P702	1"	3-#12	1-#12	DRYING BED LIFT STATION CONTROL PANEL	DRYING BED LIFT PUMP	PMP-07400B
P703	1"	3-#12	1-#12	DRYING BED LIFT STATION CONTROL PANEL	RECEPTACLE & AREA LIGHT	
OVERFLOW LIFT STATION						
P800	1"	2-#10	1-#10	SES	PANEL 'L1'	
P801	1"	2-#12	1-#12	PANEL 'L1'	OVERFLOW CONTROL PANEL	
P802	1"	2-#12	1-#12	OVERFLOW CONTROL PANEL	OVERFLOW PUMP	PMP-07401

NO	BY	DATE	REVISIONS	DATE	APP.

THESE DRAWINGS ARE THE PROPERTY OF P.A.C.E. AND SHALL NOT BE REPRODUCED IN ANY MANNER NOR BE USED FOR CONSTRUCTION UNLESS STAMPED "ISSUED FOR CONSTRUCTION".

Registered Professional Engineer (Electrical) Certificate No. 73954 JAMES BELLEVUE JOHNSON Date Signed Expires 9-30-27

PREPARED BY: WRIGHT ENGINEERING
DESIGNED BY: JHB
DRAWN BY: XAG
CHECKED BY: JHB
SCALE: AS NOTED
DATE: NOV 2025
JOB NO.: B614

TITLE: ELECTRICAL CONDUIT + WIRE TABLES I

JOB: TOWN OF JEROME WASTEWATER TREATMENT PLANT YAVAPAI CO. AZ

PREPARED BY: PACE Advanced Water Engineering
8723 E. Via de Commercio, Suite 104, Scottsdale, CA 85258
p. (408) 991-3595 | www.pacewater.com

ISSUED FOR BID

SHEET E2.4
76 OF 99 SHEETS

JOB NO. B614

WRIGHT engineering corporation
ELECTRICAL ENGINEERING AND DESIGN
165 EAST CHILTON DRIVE
CHANDLER, ARIZONA 85225
PHONE: 480.497.5829
FAX: 480.497.5807
www.wrightengineering.us
Wright Project # 23319

CALL TWO WORKING DAYS BEFORE YOU DIG
602-263-1100
1-800-STAKE-IT
(OUTSIDE MARICOPA COUNTY)

H:\2025\23319-Jerome WWTP\25-E.dwg, Tab: E2.4 - by jmolitor on 11/04/25 at 2:56:48 PM

CONDUIT AND WIRE SCHEDULE FOR CONTROL

CONDUIT NO.	CONDUIT SIZE	POWER	GROUND	CONTROL	FROM	TO	REMARKS
GENERATOR/SES							
C101	3/4"		#14	(2)#14	AUTOMATIC TRANSFER SWITCH	GENERATOR	
C102	3/4"		#14	(2)#14	SBR CONTROL PANEL	AUTOMATIC TRANSFER SWITCH	
C103	3/4"		#14	(6)#14	SBR CONTROL PANEL	GENERATOR	
C104	3/4"		#14	(2)#14	GENERATOR	E-STOP	EST-01000
C105	2"	PULL ROPE			SBR CONTROL PANEL	MCC	
C106	1"	PULL ROPE			SEE SITE PLAN		SPARE
HEADWORKS STATION							
C200	3/4"		#14	(2)#14	SBR CONTROL PANEL	HEADWORKS CONTROL PANEL	
C201	3/4"		#14	(2)#14	HEADWORKS CONTROL PANEL	INFLUENT COARSE SCREEN	EST-03010A
C202	3/4"		#14	(2)#14	HEADWORKS CONTROL PANEL	INFLUENT COARSE SCREEN	EST-03010B
C203	3/4"		#14	(2)#14	HEADWORKS CONTROL PANEL	INFLUENT COARSE SCREEN CONVEYOR	EST-03010C
C204	3/4"		#14	(6)#14	HEADWORKS CONTROL PANEL	V-02020	ZSO-03023,ZSC-03023, HS-03023
C205	1.5"			(4) FACTORY CABLE	HEADWORKS CONTROL PANEL	CONDUIT BODY	LE-03031
C206	3/4"			FACTORY CABLE	HEADWORKS CONTROL PANEL	LEVEL SENSOR	LE-03031
C207	3/4"			FACTORY CABLE	HEADWORKS CONTROL PANEL	LEVEL SENSOR	LE-03032
C208	3/4"			FACTORY CABLE	HEADWORKS CONTROL PANEL	LEVEL SENSOR	LE-03033
C209	3/4"			FACTORY CABLE	HEADWORKS CONTROL PANEL	LEVEL SENSOR	LE-03034

TP=TWISTED SHIELDED PAIR

CONDUIT AND WIRE SCHEDULE FOR CONTROL

CONDUIT NO.	CONDUIT SIZE	POWER	GROUND	CONTROL	FROM	TO	REMARKS
SEQUENCING BATCH REACTOR							
C300	1"		#14	(6)#14	SBR CONTROL PANEL	MCP#1	MXR-05110
				(6)#14			PMP-05100
C350	1"		#14	(6)#14	SBR CONTROL PANEL	MCP#2	MXR-05112
				(6)#14			PMP-05101
C301	1"		#14	(4)#14	MCP#1	J-BOX C1	ME & TE-05110
				(4)#14			ME & TE-05100
C351	1"		#14	(4)#14	MCP#2	J-BOX C2	ME & TE-05112
				(4)#14			ME & TE-05101
C302	1"			FACTORY CABLE	J-BOX C1	MXR-05110	ME & TE-05110
C303	1"			FACTORY CABLE		PMP-05100	ME & TE-05100
C352	1"			FACTORY CABLE	J-BOX C2	MXR-05112	ME & TE-05112
C353	1"			FACTORY CABLE		PMP-05101	ME & TE-05101
C310	1.5"		#14	(8)#14	SBR CONTROL PANEL	J-BOX C1	M-05111
				(8)#14			PV-05120
				(2)#14			LSH-05131A
				(2)#14			LSL-05131B
				(4)#14			SBR AIR VALVE #1
C360	1.5"		#14	(8)#14		J-BOX C2	M-05113
				(8)#14			PV-05122
				(2)#14			LSH-05133A
				(2)#14			LSL-05133B
				(4)#14			SBR AIR VALVE #2
C311	1"			FACTORY CABLE	J-BOX C1	DECANTER #1	M-05111
C312	1"			(8)#14		SBR INFLUENT VALVE #1	PV-05120
C313				FACTORY CABLE		HIGH LEVEL FLOAT #3	LSH-05231
C314	1"			(2) FACTORY CABLE		CONDUIT BODY 1	LSH-05131A, LSH-05131B
C315	3/4"			FACTORY CABLE	CONDUIT BODY 1	HIGH LEVEL FLOAT #1	LSH-05131A
C316	3/4"			FACTORY CABLE		LOW LEVEL FLOAT #1	LSL-05131B
C317	3/4"			(4)#14	J-BOX C1	SBR AIR VALVE #1	
C361	1"			FACTORY CABLE	J-BOX C2	DECANTER #2	M-05113
C362	1"			(8)#14		SBR INFLUENT VALVE #2	PV-05122
C363				FACTORY CABLE		HIGH LEVEL FLOAT #4	LSH-05233
C364	1"			(2) FACTORY CABLE		CONDUIT BODY 2	LSH-05133A, LSH-05133B
C365	3/4"			FACTORY CABLE	CONDUIT BODY 2	HIGH LEVEL FLOAT #2	LSH-05133A
C366	3/4"			FACTORY CABLE		LOW LEVEL FLOAT #2	LSL-05133B
C367	3/4"			(4)#14	J-BOX C2	SBR AIR VALVE #2	
C320	1"			#16 TP	SBR CONTROL PANEL	J-BOX C1	LE-05130
				#16 TP			BFV-05121
				#16 TP			LE-05230
				#16 TP			AT-05160A
C370	1"			#16 TP	SBR CONTROL PANEL	J-BOX C2	LE-05132
				#16 TP			BFV-05123
				#16 TP			LE-05232
				#16 TP			AT-05161A
C321	3/4"			FACTORY CABLE	J-BOX C1	LEVEL SENSOR #1	LE-05130
C322	3/4"			#16 TP		DECANTER VALVE	BFV-05121
C323				FACTORY CABLE		LEVEL SENSOR #3	LE-05230
C324	3/4"			#16 TP		D.O. ANALYZER	AT-05160A
C325				FACTORY CABLE	D.O. ANALYZER	D.O. SENSOR	AE-05160B
C371	3/4"			FACTORY CABLE	J-BOX C2	LEVEL SENSOR #2	LE-05132
C372	3/4"			#16 TP		DECANTER VALVE	BFV-05123
C373				FACTORY CABLE		LEVEL SENSOR #4	LE-05232
C374	3/4"			#16 TP		D.O. ANALYZER	AT-05161A
C375				FACTORY CABLE	D.O. ANALYZER	D.O. SENSOR	AE-05161B

TP=TWISTED SHIELDED PAIR

CONDUIT AND WIRE SCHEDULE FOR CONTROL

CONDUIT NO.	CONDUIT SIZE	POWER	GROUND	CONTROL	FROM	TO	REMARKS
CHLORINE CONTACT							
C400	3/4"			#16TP	SBR CONTROL PANEL	FLOW METER	FM-06240 CHLORINE CONTACT
C401	1"			(2)#16TP	SBR CONTROL PANEL	V-02420	ZSO-06221, ZSC-06221, HS-06221 CHLORINE CONTACT
BLOWER ROOM							
C501			#14	(4)#14, (2)#16TP, CAT6	SBR CONTROL PANEL	BLOWER VFD BLR-04310	
C502			#14	(4)#14, (2)#16TP, CAT6		BLOWER VFD BLR-04311	
C503			#14	(4)#14, (2)#16TP, CAT6		BLOWER VFD BLR-04312	
C504			#14	(4)#14, (2)#16TP, CAT6		BLOWER VFD BLR-04313	
C511	3/4"		#14	(2)#14	BLOWER VFD BLR-04310	MOTOR RTD	TS-04310
C512	3/4"		#14	(2)#14	BLOWER VFD BLR-04311	MOTOR RTD	TS-04311
C513	3/4"		#14	(2)#14	BLOWER VFD BLR-04312	MOTOR RTD	TS-04312
C514	3/4"		#14	(2)#14	BLOWER VFD BLR-04313	MOTOR RTD	TS-04313
C520	1"		#14	(16)#14	SBR CONTROL PANEL	J-BOX	TT-04310, TT-04311, TT-04312, TT-04313
C530	1"			(4)#16TP			PT-04310, PT-04311, PT-04312, PT-04313
C521	3/4"		#14	(2)#14	J-BOX	THERMOSTAT AIR LINE BLOWER BLR-04310	TT-04310
C522	3/4"		#14	(2)#14		THERMOSTAT AIR LINE BLOWER BLR-04311	TT-04311
C523	3/4"		#14	(2)#14		THERMOSTAT AIR LINE BLOWER BLR-04312	TT-04312
C524	3/4"		#14	(2)#14		THERMOSTAT AIR LINE BLOWER BLR-04313	TT-04313
C531	3/4"			#16TP	J-BOX	PRESSURE TRANSDUCER AIR LINE BLOWER BLR-04310	PT-04310, PT-04311, PT-04312, PT-04313
C532	3/4"			#16TP		PRESSURE TRANSDUCER AIR LINE BLOWER BLR-04311	PT-04310, PT-04311, PT-04312, PT-04313
C533	3/4"			#16TP		PRESSURE TRANSDUCER AIR LINE BLOWER BLR-04312	PT-04310, PT-04311, PT-04312, PT-04313
C534	3/4"			#16TP		PRESSURE TRANSDUCER AIR LINE BLOWER BLR-04313	PT-04310, PT-04311, PT-04312, PT-04313
DEWATERING							
C600	1"		#14	(4)#14	SBR CONTROL PANEL	SLUDGE BAGGING SYSTEM CONTROL PANEL	
C601	3/4"		#14	(2)#14	SLUDGE BAGGING SYSTEM CONTROL PANEL	DEWATERING PUMP	PMP-08400, VERIFY CABLE TYPE WITH VENDOR
C602	3/4"		#14	(2)#14	SLUDGE BAGGING SYSTEM CONTROL PANEL	DRY POLYMER MIXING UNIT	MXR-08410, VERIFY CABLE TYPE WITH VENDOR
C603	3/4"		#14	(2)#14	SLUDGE BAGGING SYSTEM CONTROL PANEL	INFLUENT PLUG VALVE	V-02420, VERIFY CABLE TYPE WITH VENDOR
C604	3/4"		#14	(2)#14	SLUDGE BAGGING SYSTEM CONTROL PANEL	POLYMER PUMP	PMP-08401, VERIFY CABLE TYPE WITH VENDOR
DRYING BED LIFT STATION							
C700	1"		#14	(4)#14	SBR CONTROL PANEL	DRYING BED LIFT STATION CONTROL PANEL	
C701	1"		FACTORY CABLE		DRYING BED LIFT STATION CONTROL PANEL	PMP-07400A	
C702	1"		FACTORY CABLE		DRYING BED LIFT STATION CONTROL PANEL	PMP-07400B	
C706	1"		(3) FACTORY CABLE		DRYING BED LIFT STATION CONTROL PANEL	LEVEL FLOATS	LSHH-07430A, LSH-07430B, LSL-07430C
OVERFLOW LIFT STATION							
C801	1"		#14	(4)#14	SBR CONTROL PANEL	DRYING BED LIFT STATION CONTROL PANEL	
C802	1"		FACTORY CABLE		DRYING BED LIFT STATION CONTROL PANEL	PMP-07401	
C803	1"		(2) FACTORY CABLE		DRYING BED LIFT STATION CONTROL PANEL	LEVEL FLOATS	LSHH-07431A, LSL-07431B

TP=TWISTED SHIELDED PAIR

NO	BY	DATE	REVISIONS	DATE	APP.

Registered Professional Engineer (Electrical) Certificate No. 73954 JASON BILLEDEAU 09-30-27 Expires 9-30-27

PREPARED BY: WRIGHT ENGINEERING
DESIGNED BY: JHB
DRAWN BY: XAG
CHECKED BY: JHB
SCALE: AS NOTED
DATE: NOV 2025
JOB NO.: B614

THESE DRAWINGS ARE THE PROPERTY OF P.A.C.E. AND SHALL NOT BE REPRODUCED IN ANY MANNER NOR BE USED FOR CONSTRUCTION UNLESS STAMPED "ISSUED FOR CONSTRUCTION".

TITLE
ELECTRICAL
CONDUIT + WIRE TABLES II

JOB
TOWN OF JEROME
WASTEWATER
TREATMENT PLANT
YAVAPAI CO. AZ

ISSUED FOR BID

PREPARED BY:
PACE
Advanced Water Engineering
8723 E. VIA de VENTURA, SUITE 230 | SCOTTSDALE, CA 85258
P: (480) 991-3995 | www.pacewater.com

WRIGHT engineering corporation
ELECTRICAL ENGINEERING AND DESIGN
165 EAST CHILTON DRIVE
CHANDLER, ARIZONA 85225
PHONE: 480.497.5829
FAX: 480.497.5807
www.wrightengineering.us
Wright Project # 23319

CALL TWO WORKING DAYS BEFORE YOU DIG
602-263-1100
1-800-STAKE-IT
(OUTSIDE MARICOPA COUNTY)

SHEET
E2.5
77 OF 99 SHEETS

JOB NO. B614

C:\DOCS\Work\WIP\23319 E Eng - Tab E2.5 - Hydraulic and I+C\E2.5 # E2.6 (Plot)

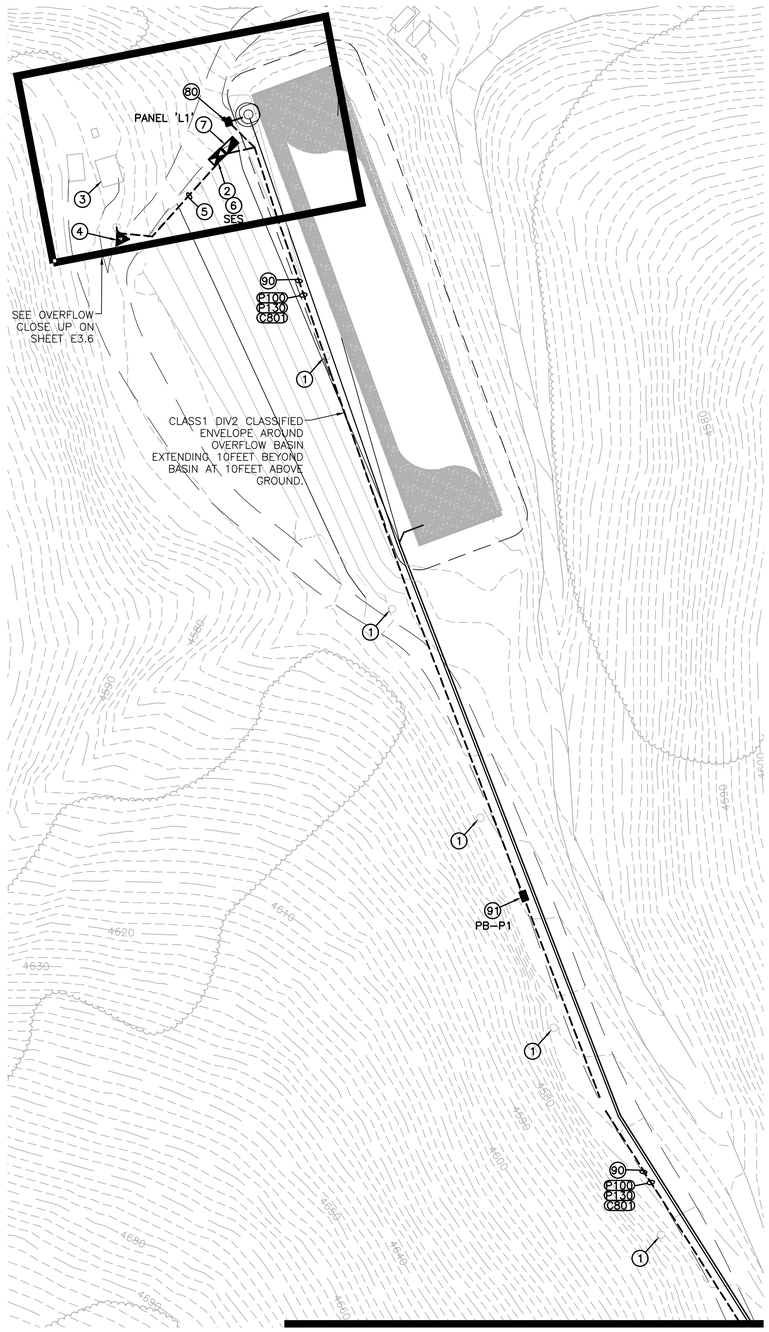

MATCHLINE 'A' SEE ABOVE RIGHT

MATCHLINE 'A' BELOW LEFT

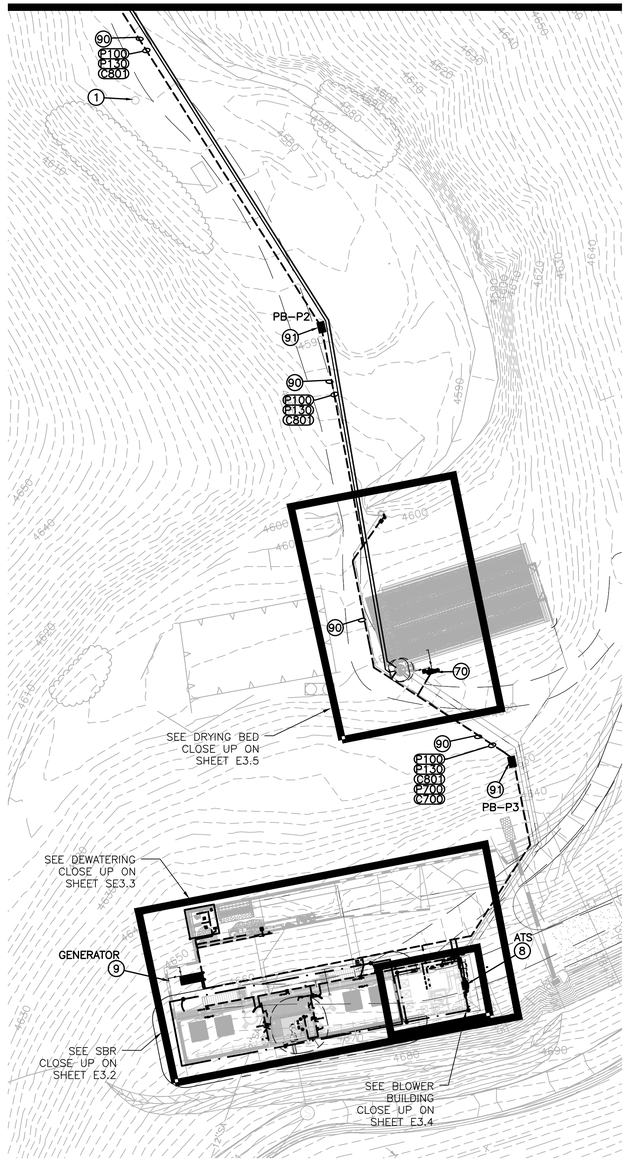

CONSTRUCTION NOTES

1. REMOVE ALL EXISTING CUSTOMER OWNED OVERHEAD ELECTRICAL AND POWER POLE AND DISPOSE OF PROPERLY. COORDINATE WITH OWNER FOR SCHEDULING.
2. REMOVE EXISTING SES AND PANEL AND DISPOSE OF PROPERLY. COORDINATE DISCONNECTION OF THE METER AND SECONDARY CONDUCTORS WITH APS
3. DE-ENERGIZE EXISTING LAB BUILDING UPON COMPLETION OF CONSTRUCTION OF THE NEW LAB. REMOVE ALL EXISTING CONDUCTORS AND ELECTRICAL EQUIPMENT AND DISPOSE OF PROPERLY. COORDINATE ALL WORK WITH OWNER AND POWER COMPANY PRIOR TO DE-ENERGIZATION.
4. COORDINATE WITH APS TO REPLACE THE EXISTING POLE MOUNTED SINGLE PHASE TRANSFORMER. APS TO INSTALL THREE PHASE TRANSFORMERS. CONTRACTOR SHALL VERIFY LOCATION OF NEW TRANSFORMER WITH APS. APS PLANS WILL DETERMINE EXACT LOCATION AND TAKE PRECEDENCE OVER THESE DRAWINGS. COORDINATE ALL WORK WITH APS.
5. APS SERVICE LINE. TRENCH AND INSTALL CONDUIT PER APS SPECIFICATIONS. POWER COMPANY PLANS WILL DETERMINE EXACT LOCATION OF CONDUIT AND TAKE PRECEDENCE OVER THESE DRAWINGS.
6. SES, 400 AMP, 277/480V, 3ø, 4W, SEE DETAIL 1 ON E4.1.
7. MINI-POWER ZONE AND PANELBOARD. SEE DETAIL 1 ON E4.1.
8. ATS 400A 277/480V, 3ø, 4W, SEE DETAIL 2 ON SHEET E4.1.
9. GENERATOR 125KW, 277/480V, 3ø, 4W, SEE DETAIL 1 ON E4.3.
70. 30A DRYING BED LIFT PUMP CONTROL PANEL, 480V, 3ø, 4W. ELECTRICAL CONTRACTOR SHALL MAKE ALL POWER AND CONTROL CONNECTIONS PER THESE PLANS AND SPECIFICATIONS AND THE MANUFACTURERS REQUIREMENTS. SEE DETAIL 1 ON SHEET E4.4.
80. OVERFLOW LIFT PUMP CONTROL PANEL, BY VENDOR. 240V, 1ø, 3W. ELECTRICAL CONTRACTOR SHALL MAKE ALL POWER AND CONTROL CONNECTIONS PER THESE PLANS AND SPECIFICATIONS AND THE MANUFACTURERS REQUIREMENTS. SEE DETAIL 1 ON SHEET E4.4.
90. JOINT TRENCH WITH WATER LINES. MAINTAIN 24-INCH SEPARATION. SEE DETAIL 3 ON SHEET E4.3.
91. STACKED #7 CONCRETE PULL BOX. INSTALL AS SHOWN OR AS NEEDED IF CONDUIT RUNS WILL EXCEED 360 DEGREE OF BENDS OR THE LENGTH EXCEEDS 400 FEET. INSTALL 1 FOR POWER AND 1 FOR CONTROL. SEE DETAIL 5 ON SHEET E4.3.

LEGEND

- PROPOSED 3ø POWER COMPANY TRANSFORMER
- SES 400A 277/480V 3ø 4W
- TRANSFORMER 480V-120/240V
- PANEL 120/240V 1ø 3W
- CONTROL PANEL
- EYS SEALS, CLASS 1 DIVISION 1
- ELECTRICAL SWITCH
- 120V GFCI RECEPTACLE
- 120V GFCI QUADRUPLEX RECEPTACLE
- ELECTRICAL AND COMMUNICATION PULL BOXES
- NEW PULL BOX
- NON FUSED NEMA 4X DISCONNECT
- UNDERGROUND ELECTRICAL CONDUIT
- ABOVE GROUND ELECTRICAL CONDUIT
- FLEXIBLE METALLIC CONDUIT
- GROUNDING ELECTRODE CONDUCTOR
- GROUND ROD WITH INSPECTION WELL. INSPECTION WELL IS ONLY FOR THE FIRST GROUND ROD CONNECTED TO

PROPOSED SITE PLAN ELECTRICAL

NORTH

GRAPHIC SCALE
30 15 0 15 30 60
1 INCH = 30 FEET

WRIGHT engineering corporation
ELECTRICAL ENGINEERING AND DESIGN
165 EAST CHILTON DRIVE
CHANDLER, ARIZONA 85225
PHONE: 480.497.5829
FAX: 480.497.5807
www.wrightengineering.us
Wright Project # 23319

CALL TWO WORKING DAYS BEFORE YOU DIG
602-263-1100
1-800-STAKE-IT
(OUTSIDE MARICOPA COUNTY)

NO	BY	DATE	REVISIONS	DATE	APP.

Registered Professional Engineer (Electrical) Certificate No. 73954 JASON BILLEDEAU Date Signed 11-24-25 Expires 9-30-27

PREPARED BY: WRIGHT ENGINEERING
DESIGNED BY: JHB
DRAWN BY: XAG
CHECKED BY: JHB
SCALE: AS NOTED
DATE: NOV 2025
JOB NO. B614

THESE DRAWINGS ARE THE PROPERTY OF P.A.C.E. AND SHALL NOT BE REPRODUCED IN ANY MANNER NOR BE USED FOR CONSTRUCTION UNLESS STAMPED "ISSUED FOR CONSTRUCTION".

TITLE
ELECTRICAL
PROPOSED SITE PLAN

JOB
TOWN OF JEROME
WASTEWATER
TREATMENT PLANT
YAVAPAI CO. AZ

ISSUED FOR BID

PREPARED BY:
PACE
Advanced Water Engineering
8723 E. VIA de COMMERCIO, SUITE 1-A, SCOTTSDALE, CA 85258
P: (480) 991-3595 | www.pacewater.com

SHEET
E3.1
78 OF 99 SHEETS
JOB NO. B614

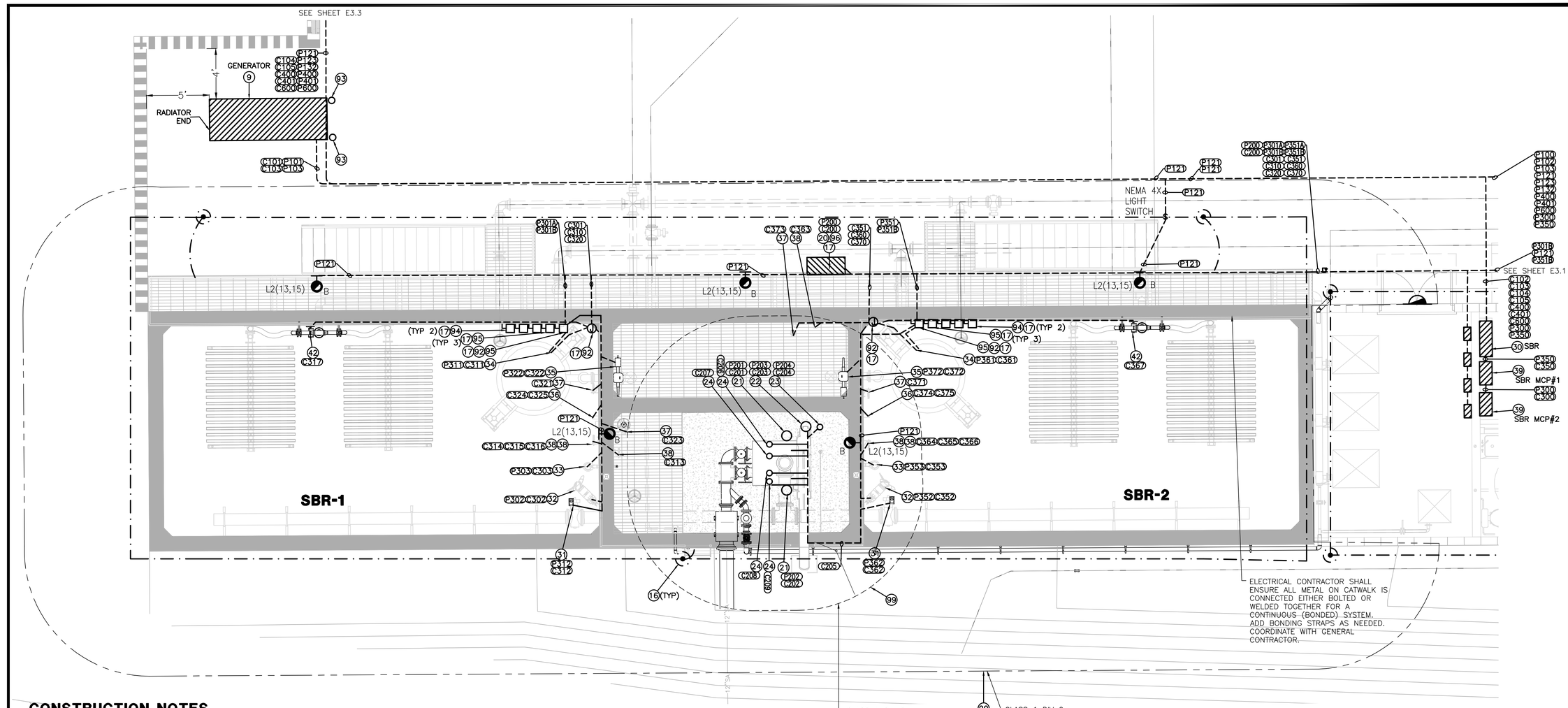
SEE SHEET E3.3
GENERATOR
9
5'
RADIATOR END
93
C101 P101
C103 P103
P121
C104 P123
C105 P142
C200 P400
C400 P400
C600 P600
NEMA 4X LIGHT SWITCH
SEE SHEET E3.1
C100
C102
C103
C104
C105
C106
C107
C108
C109
C110
C111
C112
C113
C114
C115
C116
C117
C118
C119
C120
C121
C122
C123
C124
C125
C126
C127
C128
C129
C130
C131
C132
C133
C134
C135
C136
C137
C138
C139
C140
C141

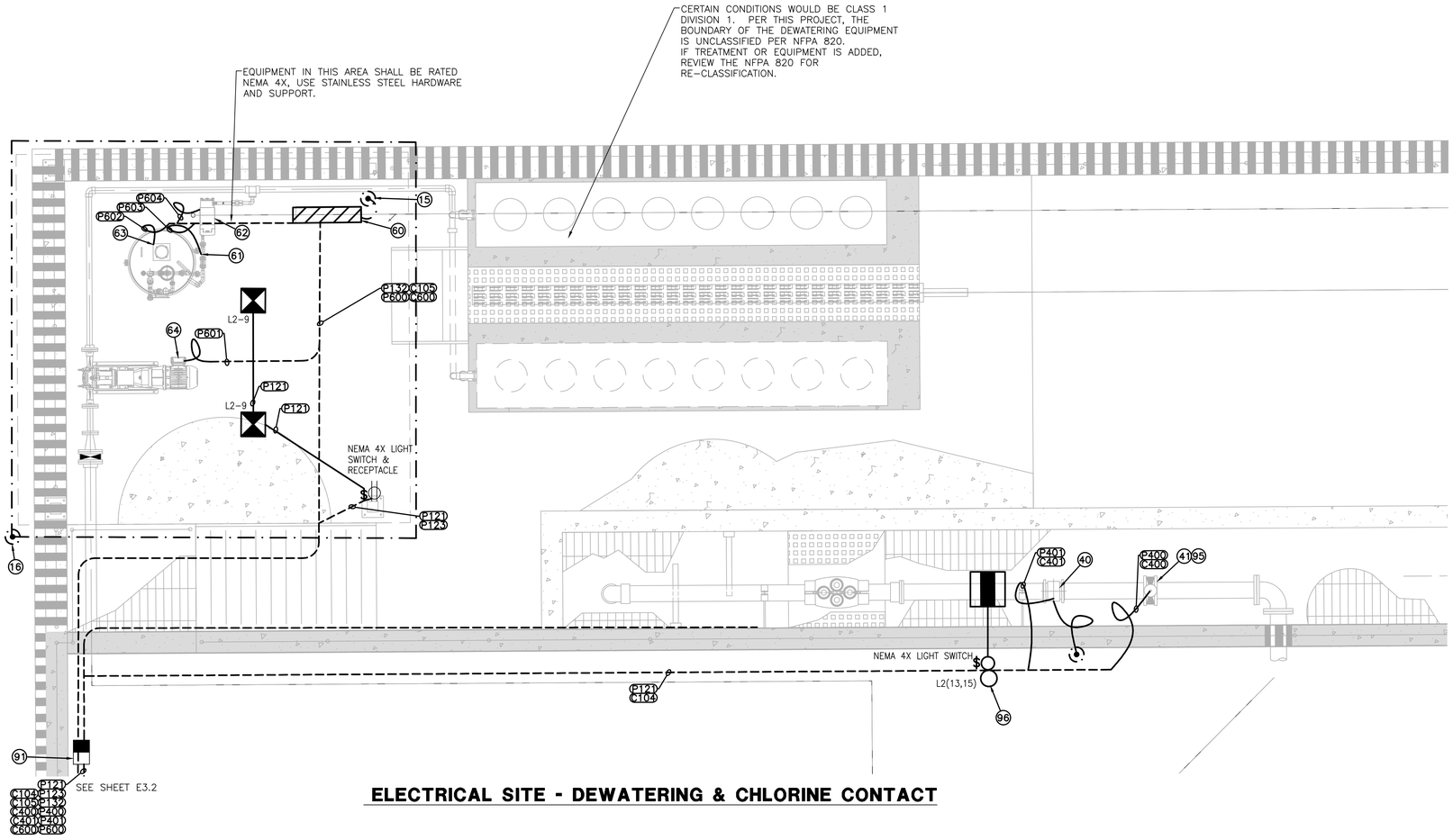

ELECTRICAL SITE - DEWATERING & CHLORINE CONTACT

CONSTRUCTION NOTES

(15) GROUNDING ELECTRODE CONDUCTORS, GROUND ROD, AND INSPECTION WELL FOR ONLY THE FIRST GROUND ROD, PER SINGLE LINE DIAGRAMS AND DETAILS ON SHEET E4.6.

(16) LIGHTNING PROTECTION SYSTEM, PER NFPA AND DETAIL 6 ON SHEET E4.6

(40) SBR EFFLUENT VALVE. ELECTRICAL CONTRACTOR SHALL MAKE ALL POWER AND CONTROL CONNECTIONS PER THESE PLANS AND SPECIFICATIONS AND THE MANUFACTURERS REQUIREMENTS.

(41) FLOW METER. ELECTRICAL CONTRACTOR SHALL MAKE ALL POWER AND CONTROL CONNECTIONS PER THESE PLANS AND SPECIFICATIONS AND THE MANUFACTURERS REQUIREMENTS.

(60) 20A SLUDGE BAGGING SYSTEM CONTROL PANEL, BY VENDOR. ELECTRICAL CONTRACTOR SHALL MAKE ALL POWER AND CONTROL CONNECTIONS PER THESE PLANS AND SPECIFICATIONS AND THE MANUFACTURERS REQUIREMENTS.

(61) POTABLE WATER VALVE. ELECTRICAL CONTRACTOR SHALL MAKE ALL POWER AND CONTROL CONNECTIONS PER THESE PLANS AND SPECIFICATIONS AND THE MANUFACTURERS REQUIREMENTS.

(62) POLYMER METERING PUMP. ELECTRICAL CONTRACTOR SHALL MAKE ALL POWER AND CONTROL CONNECTIONS PER THESE PLANS AND SPECIFICATIONS AND THE MANUFACTURERS REQUIREMENTS.

(63) DRY POLYMER MIXER. ELECTRICAL CONTRACTOR SHALL MAKE ALL POWER AND CONTROL CONNECTIONS PER THESE PLANS AND SPECIFICATIONS AND THE MANUFACTURERS REQUIREMENTS.

(64) DEWATERING FEED PUMP. ELECTRICAL CONTRACTOR SHALL MAKE ALL POWER AND CONTROL CONNECTIONS PER THESE PLANS AND SPECIFICATIONS AND THE MANUFACTURERS REQUIREMENTS.

(91) STACKED #7 CONCRETE PULL BOX. INSTALL AS SHOWN OR AS NEEDED IF CONDUIT RUNS WILL EXCEED 360 DEGREE OF BENDS OR THE LENGTH EXCEEDS 400 FEET. INSTALL 1 FOR POWER AND 1 FOR CONTROL. SEE DETAIL 5 ON SHEET E4.3.

(95) ROTARY TYPE DISCONNECT, NEMA 4X FOR OUTDOOR AND CLASS 1 DIV 1 WITHIN CLASSIFIED BOUNDARY. IF LOCATION IS ABOVE BOUNDARY, NEMA 4X WITH CLASSIFIED SEAL OFFS IS ACCEPTABLE. PROVIDE PERMANENT LABEL SUITABLE FOR CORROSIVE ENVIRONMENTS AND UV RESISTANT. MATCH LABEL NAMING CONVENTION WITH P&ID. SEE DETAIL 5 ON SHEET E4.2 & SEE DETAIL 1 ON SHEET E4.4.

(96) E-STOP, NEMA 4X FOR OUTDOOR AND CLASS 1 DIV 1 WITHIN CLASSIFIED BOUNDARY. IF LOCATION IS ABOVE BOUNDARY, NEMA 4X WITH CLASSIFIED SEAL OFFS IS ACCEPTABLE. PROVIDE PERMANENT LABEL SUITABLE FOR CORROSIVE ENVIRONMENTS AND UV RESISTANT. MATCH LABEL NAMING CONVENTION WITH P&ID. SEE DETAIL 5 ON SHEET E4.2.

LEGEND

- PROPOSED 3ø POWER COMPANY TRANSFORMER
- SES 400A 277/480V 3ø 4W
- TRANSFORMER 480V-120/240V
- PANEL 120/240V 1ø 3W
- CONTROL PANEL
- EYS SEALS, CLASS 1 DIVISION 1
- ELECTRICAL SWITCH
- 120V GFCI RECEPTACLE
- 120V GFCI QUADRUPLEX RECEPTACLE
- ELECTRICAL AND COMMUNICATION PULL BOXES
- NEW PULL BOX
- NON FUSED NEMA 4X DISCONNECT
- UNDERGROUND ELECTRICAL CONDUIT
- ABOVE GROUND ELECTRICAL CONDUIT
- FLEXIBLE METALLIC CONDUIT
- GROUNDING ELECTRODE CONDUCTOR
- GROUND ROD WITH INSPECTION WELL. INSPECTION WELL IS ONLY FOR THE FIRST GROUND ROD CONNECTED TO THE GROUNDING ELECTRODE CONDUCTOR.

GRAPHIC SCALE
2 1 0 1 2 4
1 INCH = 2 FEET
NORTH

WRIGHT engineering corporation
ELECTRICAL ENGINEERING AND DESIGN
165 EAST CHILTON DRIVE
CHANDLER, ARIZONA 85225
PHONE: 480.497.5829
FAX: 480.497.5807
www.wrightengineering.us
Wright Project # 23319

CALL TWO WORKING DAYS BEFORE YOU DIG
602-263-1100
1-800-STAKE-IT
(OUTSIDE MARICOPA COUNTY)

NO	BY	DATE	REVISIONS	DATE	APP.

Registered Professional Engineer (Electrical) Certificate No. 73954 JAMES BELLEVUE WRIGHT Date Signed 11-24-25 Expires 9-30-27

PREPARED BY: WRIGHT ENGINEERING
DESIGNED BY: JHB
DRAWN BY: XAG
CHECKED BY: JHB
DATE: NOV 2025
JOB NO.: B614
SCALE: AS NOTED

TITLE: ELECTRICAL DEWATERING PAD

JOB: TOWN OF JEROME WASTEWATER TREATMENT PLANT YAVAPAI CO. AZ

PREPARED BY:
PACE
Advanced Water Engineering
8723 E. Via de Commercio, Suite 104 | Scottsdale, CA 85258
P: (480) 991-3395 | www.pacewater.com

SHEET E3.3
80 OF 99 SHEETS

JOB NO. B614

ISSUED FOR BID

THESE DRAWINGS ARE THE PROPERTY OF P.A.C.E. AND SHALL NOT BE REPRODUCED IN ANY MANNER NOR BE USED FOR CONSTRUCTION UNLESS STAMPED "ISSUED FOR CONSTRUCTION".

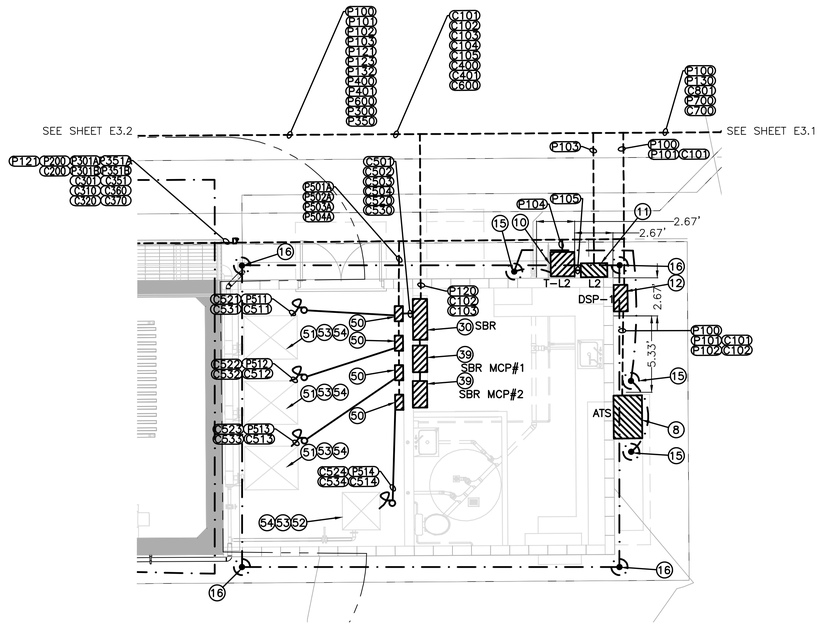

OPS BLOWER ELECTRICAL

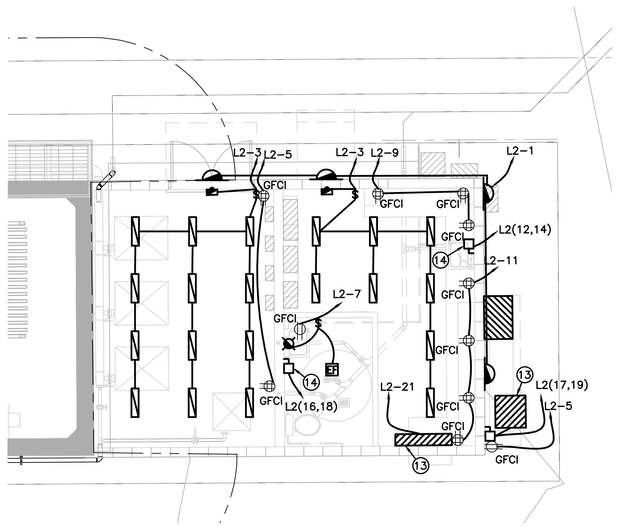

OPS BLOWER LIGHTING & POWER

CONSTRUCTION NOTES

8. ATS 400A 277/480V, 3ø, 4W, SEE DETAIL 2 ON SHEET E4.1.
10. TRANSFORMER 50KVA 480V – 120/240V 1ø, SEE DETAIL 2 ON SHEET E4.1.
11. PANELBOARD, 120/240V, 1ø, 3W, SEE DETAIL 2 ON E4.1.
12. DISTRIBUTION PANEL DSP-1 400A 277/480V, 3ø, 4W, SEE DETAIL 2 ON SHEET E4.1.
13. ELECTRICAL CONTRACTOR SHALL INSTALL POWER FEED TO MINI SPLIT AIR CONDITIONER AND HEAT PUMP & MAKE ALL 240V CONNECTIONS.
14. TANKLESS WATER HEATER & DISCONENCT. ELECTRICAL CONTRACTOR SHALL MAKE ALL POWER AND CONTROL CONNECTIONS PER THESE PLANS AND SPECIFICATIONS AND THE MANUFACTURERS REQUIREMENTS.
15. GROUNDING ELECTRODE CONDUCTORS, GROUND ROD, AND INSPECTION WELL FOR ONLY THE FIRST GROUND ROD, PER SINGLE LINE DIAGRAMS AND DETAILS ON SHEET E4.6.
16. LIGHTNING PROTECTION SYSTEM, PER NFPA AND DETAIL 6 ON SHEET E4.6
30. SBR PANEL BY VENDOR, ELECTRICAL CONTRACTOR SHALL MAKE ALL POWER AND CONTROL CONNECTIONS PER THESE PLANS AND SPECIFICATIONS AND THE MANUFACTURERS REQUIREMENTS.
50. VARIABLE FREQUENCY DRIVE. ELECTRICAL CONTRACTOR SHALL MAKE ALL POWER AND CONTROL CONNECTIONS PER THESE PLANS AND SPECIFICATIONS AND THE MANUFACTURERS REQUIREMENTS.
51. SBR AERATION BLOWER WITH INTEGRAL DISCONNECT. ELECTRICAL CONTRACTOR SHALL MAKE ALL POWER AND CONTROL CONNECTIONS PER THESE PLANS AND SPECIFICATIONS AND THE MANUFACTURERS REQUIREMENTS.
52. DIGESTER AERATION BLOWER WITH INTEGRAL DISCONNECT. ELECTRICAL CONTRACTOR SHALL MAKE ALL POWER AND CONTROL CONNECTIONS PER THESE PLANS AND SPECIFICATIONS AND THE MANUFACTURERS REQUIREMENTS.
53. PRESSURE TRANSDUCER. ELECTRICAL CONTRACTOR SHALL MAKE ALL POWER AND CONTROL CONNECTIONS PER THESE PLANS AND SPECIFICATIONS AND THE MANUFACTURERS REQUIREMENTS.
54. TEMPERATURE TRANSDUCER. ELECTRICAL CONTRACTOR SHALL MAKE ALL POWER AND CONTROL CONNECTIONS PER THESE PLANS AND SPECIFICATIONS AND THE MANUFACTURERS REQUIREMENTS.

LEGEND

- PROPOSED 3ø POWER COMPANY TRANSFORMER
- SES 400A 277/480V 3ø 4W
- TRANSFORMER 480V–120/240V
- PANEL 120/240V 1ø 3W
- CONTROL PANEL
- EYS SEALS, CLASS 1 DIVISION 1
- ELECTRICAL SWITCH
- 120V GFCI RECEPTACLE
- 120V GFCI QUADRUPLEX RECEPTACLE
- ELECTRICAL AND COMMUNICATION PULL BOXES
- NEW PULL BOX
- NON FUSED NEMA 4X DISCONNECT
- UNDERGROUND ELECTRICAL CONDUIT
- ABOVE GROUND ELECTRICAL CONDUIT
- FLEXIBLE METALLIC CONDUIT
- GROUNDING ELECTRODE CONDUCTOR
- GROUND ROD WITH INSPECTION WELL. INSPECTION WELL IS ONLY FOR THE FIRST GROUND ROD CONNECTED TO

GRAPHIC SCALE
5 2.5 0 2.5 5 10
1 INCH = 5 FEET
NORTH

WRIGHT engineering corporation
ELECTRICAL ENGINEERING AND DESIGN
165 EAST CHILTON DRIVE
CHANDLER, ARIZONA 85225
PHONE: 480.497.5829
FAX: 480.497.5807
www.wrightengineering.us
Wright Project # 23319

CALL TWO WORKING DAYS BEFORE YOU DIG
602-263-1100
1-800-STAKE-IT
(OUTSIDE MARICOPA COUNTY)

NO	BY	DATE	REVISIONS	DATE	APP.
1					
2					
3					
4					
5					

Registered Professional Engineer (Electrical) Certificate No. 73954 JAMES RELLETT Date Signed 9-30-25 Expires 9-30-27

PREPARED BY: WRIGHT ENGINEERING
DESIGNED BY: JHB
DRAWN BY: XAG
CHECKED BY: JHB
DATE: NOV 2025
JOB NO.: B614
SCALE: AS NOTED

TITLE: ELECTRICAL BLOWER OPS

JOB: TOWN OF JEROME WASTEWATER TREATMENT PLANT YAVAPAI CO. AZ

PREPARED BY:
PACE
Advanced Water Engineering
8723 E VIA de VENTURA, SUITE A-200, SCOTTSDALE, CA 85258
P: (480) 991-3955 | www.pacewater.com

SHEET
E3.4
81 OF 99 SHEETS

JOB NO. B614

ISSUED FOR BID

THESE DRAWINGS ARE THE PROPERTY OF P.A.C.E. AND SHALL NOT BE REPRODUCED IN ANY MANNER NOR BE USED FOR CONSTRUCTION UNLESS STAMPED "ISSUED FOR CONSTRUCTION".

C:\2025\01\Jerome WWTP\23319 E.dwg, Tab: E3.4, by jaime on 11/14/25 at 08:43 PM

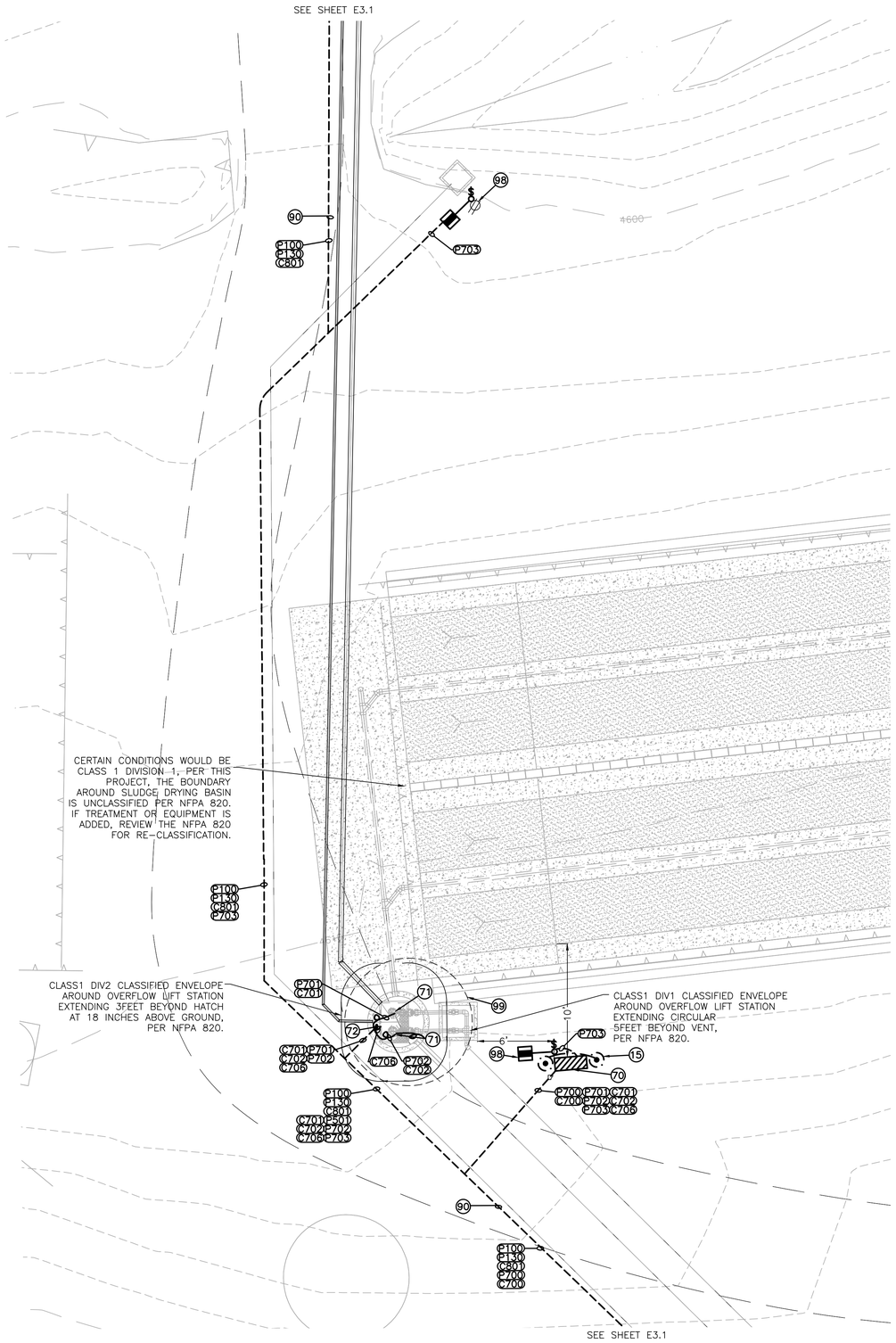

DRYING BED LIFT STATION ELECTRICAL

CONSTRUCTION NOTES

(15) GROUNDING ELECTRODE CONDUCTORS, GROUND ROD, AND INSPECTION WELL FOR ONLY THE FIRST GROUND ROD. PER SINGLE LINE DIAGRAMS AND DETAILS ON SHEET E4.6.

(70) 30A DRYING BED LIFT PUMP CONTROL PANEL, 480V, 3ø, 4W. ELECTRICAL CONTRACTOR SHALL MAKE ALL POWER AND CONTROL CONNECTIONS PER THESE PLANS AND SPECIFICATIONS AND THE MANUFACTURERS REQUIREMENTS. SEE DETAIL 1 ON SHEET E4.4.

(71) DRYING BED LIFT PUMP. ELECTRICAL CONTRACTOR SHALL MAKE ALL POWER AND CONTROL CONNECTIONS PER THESE PLANS AND SPECIFICATIONS AND THE MANUFACTURERS REQUIREMENTS. SEE DETAIL 4 ON SHEET E4.5.

(72) LEVEL FLOAT. ELECTRICAL CONTRACTOR SHALL MAKE ALL POWER AND CONTROL CONNECTIONS PER THESE PLANS AND SPECIFICATIONS AND THE MANUFACTURERS REQUIREMENTS. SEE DETAIL 4 ON SHEET E4.5.

(90) JOINT TRENCH WITH WATER LINES. MAINTAIN 24-INCH SEPARATION. SEE DETAIL 3 ON SHEET E4.3.

(98) 20A 120V GFCI DUPLEX RECEPTACLE WITH METAL WEATHERPROOF WHILE-IN-USE AND LOCKABLE COVER INSTALLED ONTO LIGHT POLE. SEE DETAIL 2 ON SHEET E4.5.

(99) CLASSIFIED AREA VERIFY BOUNDARY WITH THE NFPA. INSTALL ANY PANELS, DISCONNECTS, SPLICES, ARC MAKING EQUIPMENT OUT OF THE BOUNDARY, WHERE NOT POSSIBLE THEN INSTALL CLASS 1 DIV 1 LISTED EQUIPMENT. ALL CONDUIT WITHIN BOUNDARY SHALL BE CLASS 1 DIV 1 OR 2 RATED AS REQUIRED BY THE BOUNDARY. USE PVC COATED THREADED RMC CONDUIT, INSTALL STAINLESS STEEL 316 ENCLOSURES, HARDWARE AND EQUIPMENT WITHIN 10 FEET OF THE BOUNDARY. INSTALL CLASSIFIED SEAL OFFS WITHIN 10 FEET OF THE BOUNDARY, AT A PANEL OR JUNCTION BOX IS PREFERRED.

LEGEND

- PROPOSED 3ø POWER COMPANY TRANSFORMER
- SES 400A 277/480V 3ø 4W
- TRANSFORMER 480V-120/240V
- PANEL 120/240V 1ø 3W
- CONTROL PANEL
- EYS SEALS, CLASS 1 DIVISION 1
- ELECTRICAL SWITCH
- 120V GFCI RECEPTACLE
- 120V GFCI QUADRUPLEX RECEPTACLE
- ELECTRICAL AND COMMUNICATION PULL BOXES
- NEW PULL BOX
- NON FUSED NEMA 4X DISCONNECT
- UNDERGROUND ELECTRICAL CONDUIT
- ABOVE GROUND ELECTRICAL CONDUIT
- FLEXIBLE METALLIC CONDUIT
- GROUNDING ELECTRODE CONDUCTOR
- GROUND ROD WITH INSPECTION WELL. INSPECTION WELL IS ONLY FOR THE FIRST GROUND ROD CONNECTED TO

GRAPHIC SCALE
5 2.5 0 2.5 5 10
1 INCH = 5 FEET
NORTH

WRIGHT engineering corporation
ELECTRICAL ENGINEERING AND DESIGN
165 EAST CHILTON DRIVE
CHANDLER, ARIZONA 85225
PHONE: 480.497.5829
FAX: 480.497.5807
www.wrightengineering.us
Wright Project # 23319

CALL TWO WORKING DAYS BEFORE YOU DIG
602-263-1100
1-800-STAKE-IT
(OUTSIDE MARICOPA COUNTY)

NO	BY	DATE	REVISIONS	DATE	APP.

Registered Professional Engineer (Retired)
Certificate No. 73954
JASON BILLEDEAU
Date Signed 9-30-25
Expires 9-30-27

PREPARED BY: WRIGHT ENGINEERING
DESIGNED BY: JHB
DRAWN BY: XAG
CHECKED BY: JHB
SCALE: AS NOTED
DATE: NOV 2025
JOB NO.: B614

THESE DRAWINGS ARE THE PROPERTY OF P.A.C.E. AND SHALL NOT BE REPRODUCED IN ANY MANNER NOR BE USED FOR CONSTRUCTION UNLESS STAMPED "ISSUED FOR CONSTRUCTION".

TITLE
ELECTRICAL
DRYING BED LIFT STATION

JOB
TOWN OF JEROME
WASTEWATER
TREATMENT PLANT
YAVAPAI CO. AZ

ISSUED FOR BID

PREPARED BY:
PACE
Advanced Water Engineering
8723 E. Via de Commercio, Suite 114, Scottsdale, CA 85258
P: (480) 991-3595 | www.pacewater.com

SHEET
E3.5
82 OF 99 SHEETS

JOB NO. B614

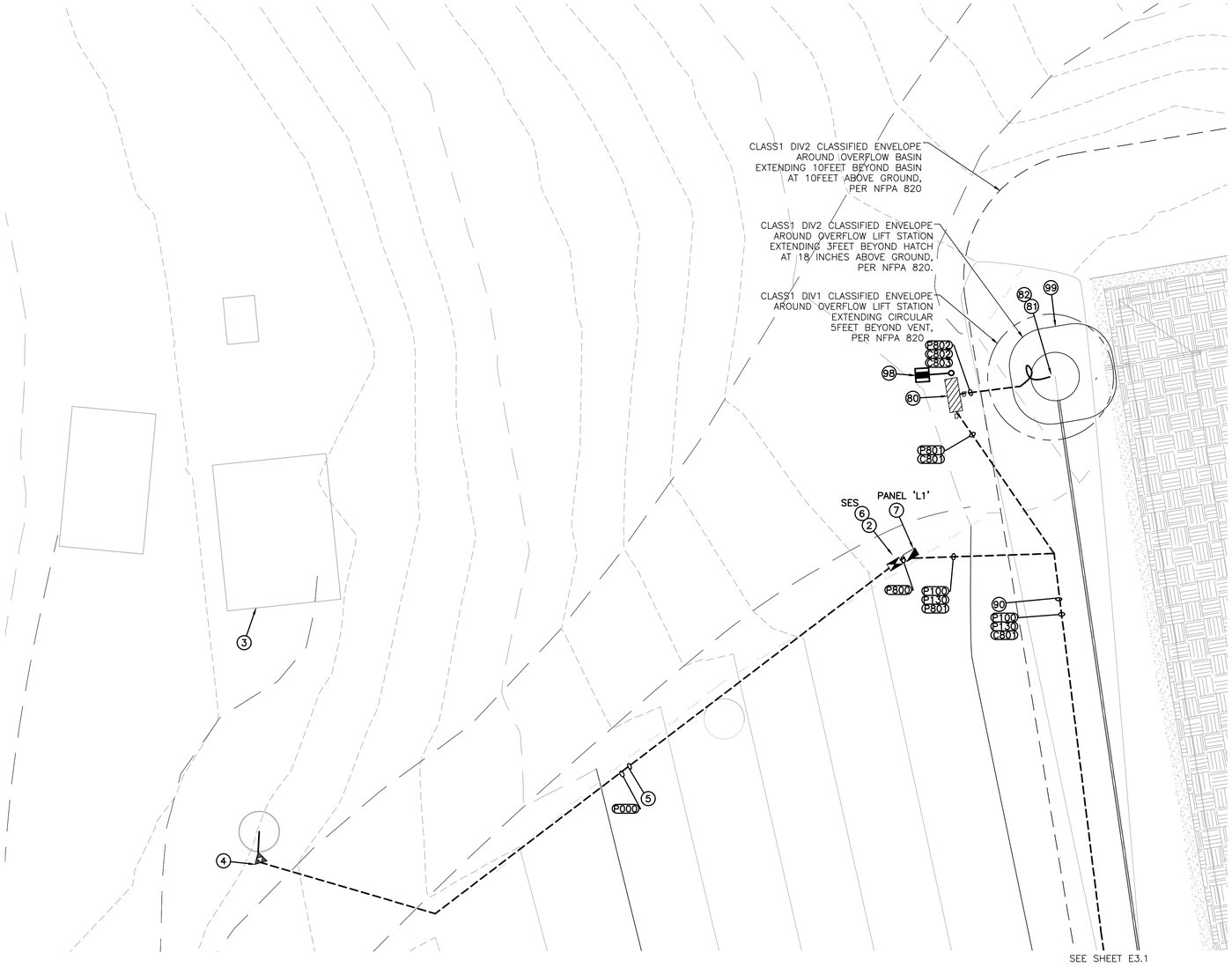

CONSTRUCTION NOTES

2. REMOVE EXISTING SES AND PANEL AND DISPOSE OF PROPERLY. COORDINATE DISCONNECTION OF THE METER AND SECONDARY CONDUCTORS WITH APS
3. DE-ENERGIZE EXISTING LAB BUILDING UPON COMPLETION OF CONSTRUCTION OF THE NEW LAB. REMOVE ALL EXISTING CONDUCTORS AND ELECTRICAL EQUIPMENT AND DISPOSE OF PROPERLY. COORDINATE ALL WORK WITH OWNER AND POWER COMPANY PRIOR TO DE-ENERGIZATION.
4. COORDINATE WITH APS TO REPLACE THE EXISTING POLE MOUNTED SINGLE PHASE TRANSFORMER. APS TO INSTALL THREE PHASE TRANSFORMERS. CONTRACTOR SHALL VERIFY LOCATION OF NEW TRANSFORMER WITH APS. APS PLANS WILL DETERMINE EXACT LOCATION AND TAKE PRECEDENCE OVER THESE DRAWINGS. COORDINATE ALL WORK WITH APS.
5. APS SERVICE LINE. TRENCH AND INSTALL CONDUIT PER APS SPECIFICATIONS. POWER COMPANY PLANS WILL DETERMINE EXACT LOCATION OF CONDUIT AND TAKE PRECEDENCE OVER THESE DRAWINGS.
6. SES, 400 AMP, 277/480V, 3ø, 4W, SEE DETAIL 1 ON E4.1.
80. OVERFLOW LIFT PUMP CONTROL PANEL, BY VENDOR. 240V, 1ø, 3W. ELECTRICAL CONTRACTOR SHALL MAKE ALL POWER AND CONTROL CONNECTIONS PER THESE PLANS AND SPECIFICATIONS AND THE MANUFACTURERS REQUIREMENTS. SEE DETAIL 1 ON SHEET E4.4.
81. OVERFLOW LIFT PUMP. ELECTRICAL CONTRACTOR SHALL MAKE ALL POWER AND CONTROL CONNECTIONS PER THESE PLANS AND SPECIFICATIONS AND THE MANUFACTURERS REQUIREMENTS. SEE DETAIL 4 ON SHEET E4.5.
82. LEVEL FLOAT. ELECTRICAL CONTRACTOR SHALL MAKE ALL POWER AND CONTROL CONNECTIONS PER THESE PLANS AND SPECIFICATIONS AND THE MANUFACTURERS REQUIREMENTS. SEE DETAIL 4 ON SHEET E4.5.
90. JOINT TRENCH WITH WATER LINES. MAINTAIN 24-INCH SEPARATION. SEE DETAIL 3 ON SHEET E4.3.
98. 20A 120V GFCI DUPLEX RECEPTACLE WITH METAL WEATHERPROOF WHILE-IN-USE AND LOCKABLE COVER INSTALLED ONTO LIGHT POLE. SEE DETAIL 2 ON SHEET E4.5.

LEGEND

- PROPOSED 3ø POWER COMPANY TRANSFORMER
- SES 400A 277/480V 3ø 4W
- TRANSFORMER 480V-120/240V
- PANEL 120/240V 1ø 3W
- CONTROL PANEL
- EYS SEALS, CLASS 1 DIVISION 1
- ELECTRICAL SWITCH
- 120V GFCI RECEPTACLE
- 120V GFCI QUADRUPLEX RECEPTACLE
- ELECTRICAL AND COMMUNICATION PULL BOXES
- NEW PULL BOX
- NON FUSED NEMA 4X DISCONNECT
- UNDERGROUND ELECTRICAL CONDUIT
- ABOVE GROUND ELECTRICAL CONDUIT
- FLEXIBLE METALLIC CONDUIT
- GROUNDING ELECTRODE CONDUCTOR
- GROUND ROD WITH INSPECTION WELL. INSPECTION WELL IS ONLY FOR THE FIRST GROUND ROD CONNECTED TO

ELECTRICAL SITE PLAN - SES & OVERFLOW PUMP STATION

GRAPHIC SCALE
5 2.5 0 2.5 5 10
1 INCH = 5 FEET
NORTH

WRIGHT engineering corporation
ELECTRICAL ENGINEERING AND DESIGN
165 EAST CHILTON DRIVE
CHANDLER, ARIZONA 85225
PHONE: 480.497.5829
FAX: 480.497.5807
www.wrightengineering.us
Wright Project # 23319

CALL TWO WORKING DAYS BEFORE YOU DIG
602-263-1100
1-800-STAKE-IT
(OUTSIDE MARICOPA COUNTY)

NO	BY	DATE	REVISIONS	DATE	APP.

Registered Professional Engineer (Electrical) Certificate No. 73954 JASON BRADLEY LEE 09-24-27 Expires 9-30-27

THESE DRAWINGS ARE THE PROPERTY OF P.A.C.E. AND SHALL NOT BE REPRODUCED IN ANY MANNER NOR BE USED FOR CONSTRUCTION UNLESS STAMPED "ISSUED FOR CONSTRUCTION".

PREPARED BY: WRIGHT ENGINEERING
DESIGNED BY: JHB
DRAWN BY: XAG
CHECKED BY: JHB
DATE: NOV 2025
JOB NO.: B614
SCALE: AS NOTED

TITLE: ELECTRICAL OVERFLOW BASIN

JOB: TOWN OF JEROME WASTEWATER TREATMENT PLANT
YAVAPAI CO. AZ

ISSUED FOR BID

PREPARED BY:
PACE
Advanced Water Engineering
8723 E. VIA de COMMERCIO, SUITE 104, SCOTTSDALE, CA 85258
P: (408) 991-3595 | www.pacewater.com

SHEET
E3.6
83 OF 99 SHEETS

JOB NO. B614

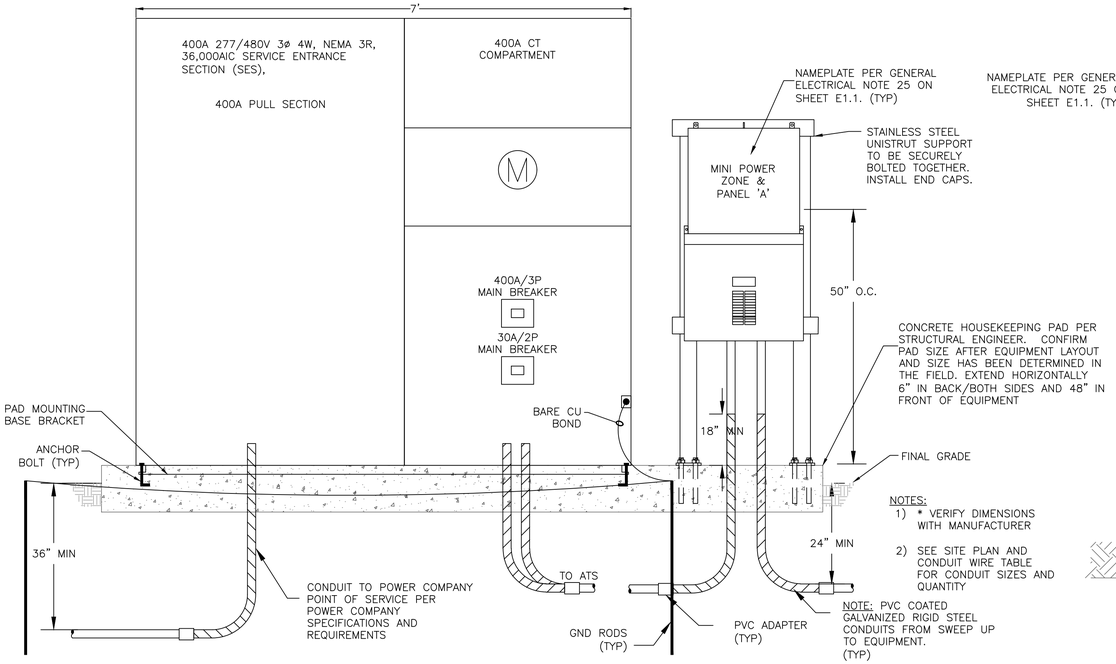

1 SES ELEVATION DETAIL

NO SCALE

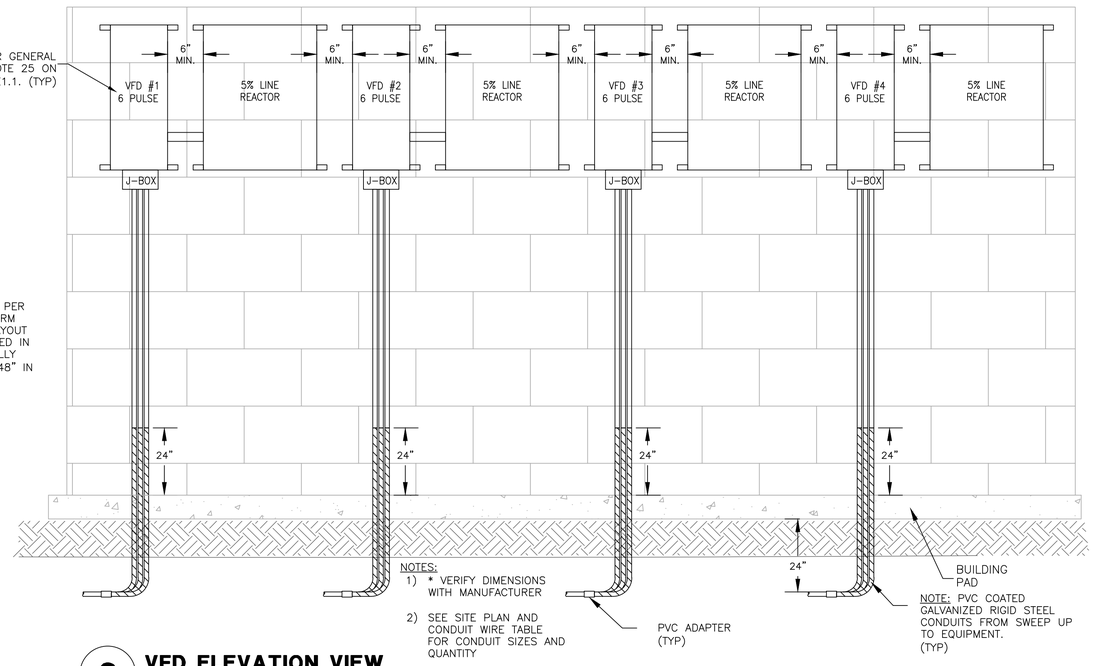

3 VFD ELEVATION VIEW

NOT TO SCALE

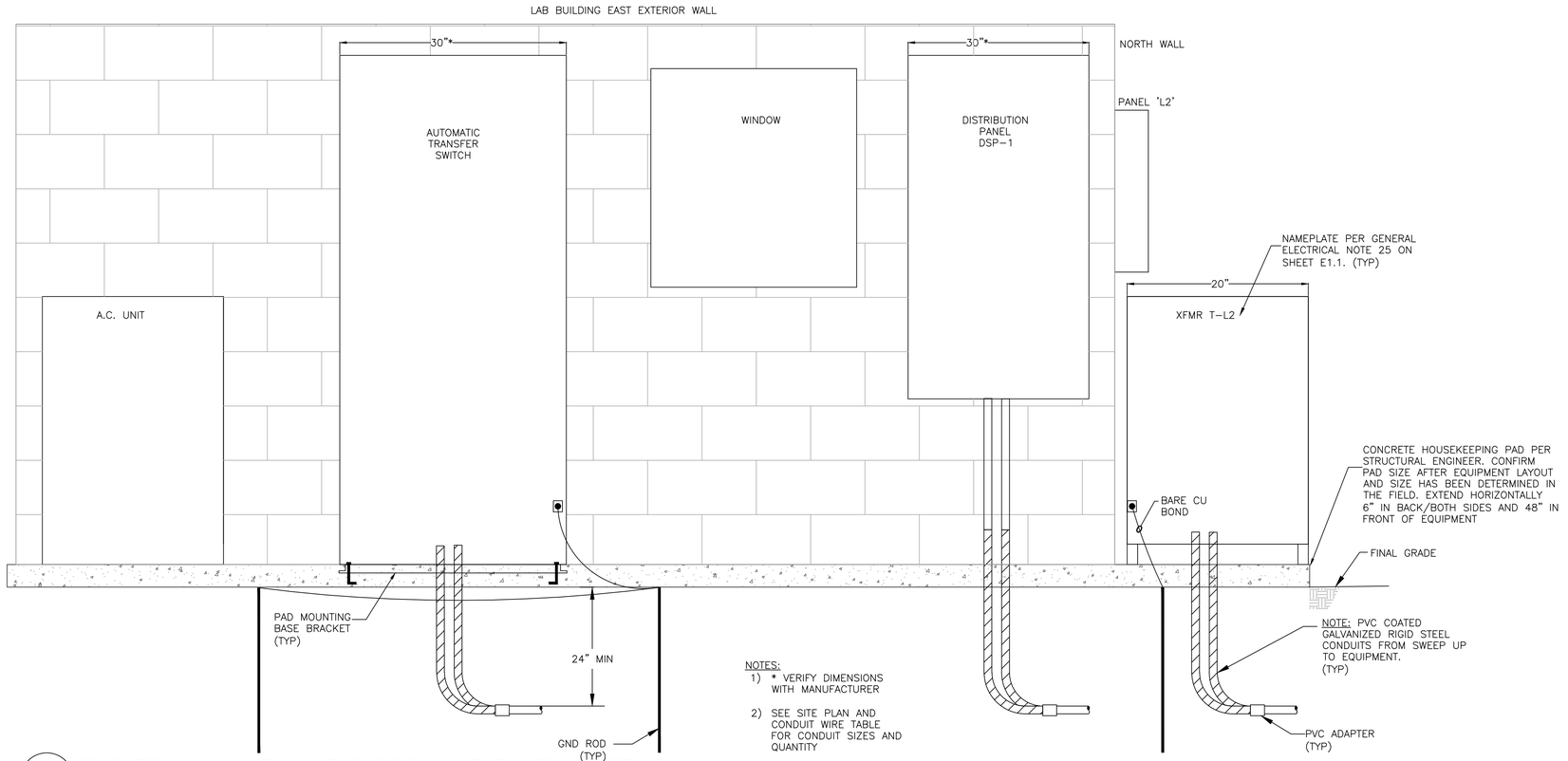

2 ELECTRICAL PANELS AT BUILDING - ELEVATION DETAIL

NO SCALE

WRIGHT engineering corporation
ELECTRICAL ENGINEERING AND DESIGN
165 EAST CHILTON DRIVE
CHANDLER, ARIZONA 85225
PHONE: 480.497.5829
FAX: 480.497.5807
www.wrightengineering.us
Wright Project # 23319

CALL TWO WORKING DAYS BEFORE YOU DIG
602-263-1100
1-800-STAKE-IT
(OUTSIDE MARICOPA COUNTY)

NO	BY	DATE	REVISIONS	DATE	APP.

Registered Professional Engineer (Electrical) Certificate No. 73954 JASON BILLEDT Date Signed 9-30-24 Expires 9-30-27

PREPARED BY: WRIGHT ENGINEERING
DESIGNED BY: JHB
DRAWN BY: XAG
CHECKED BY: JHB
SCALE: AS NOTED
DATE: NOV 2025
JOB NO. B614

THESE DRAWINGS ARE THE PROPERTY OF P.A.C.E. AND SHALL NOT BE REPRODUCED IN ANY MANNER NOR BE USED FOR CONSTRUCTION UNLESS STAMPED "ISSUED FOR CONSTRUCTION".

TITLE: ELECTRICAL DETAILS I

JOB: TOWN OF JEROME WASTEWATER TREATMENT PLANT — YAVAPAI CO. AZ

ISSUED FOR BID

PREPARED BY:
PACE
Advanced Water Engineering
8721 E. Via de Commercio, Suite 104 | Scottsdale, CA 85258
P: (408) 991-3595 | www.pacewater.com

SHEET E4.1
84 OF 99 SHEETS

JOB NO. B614

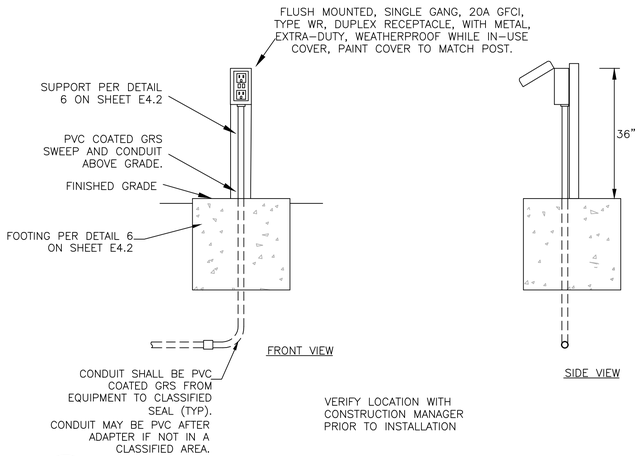

1 RECEPTACLE PEDESTAL DETAIL

NO SCALE

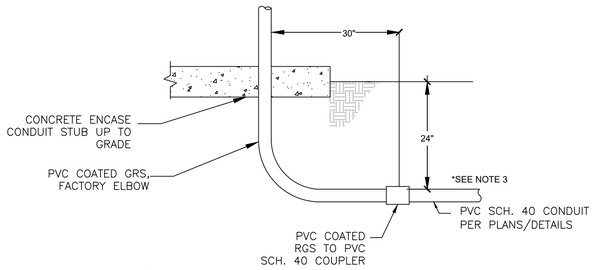

NOTES:
1. ALL DIMENSIONS SHOWN ARE MINIMUM.
2. PROVIDE 6 INCH COVER OF CONCRETE WITHIN 2 FEET OF ALL DRIVABLE AREAS PER DETAILS AND PLAN.
3. CONDUITS THROUGH CLASSIFIED AREA SHALL BE PVC COATED RGS UNDERGROUND

2 TYPICAL CONDUIT STUB UP DETAIL

NO SCALE

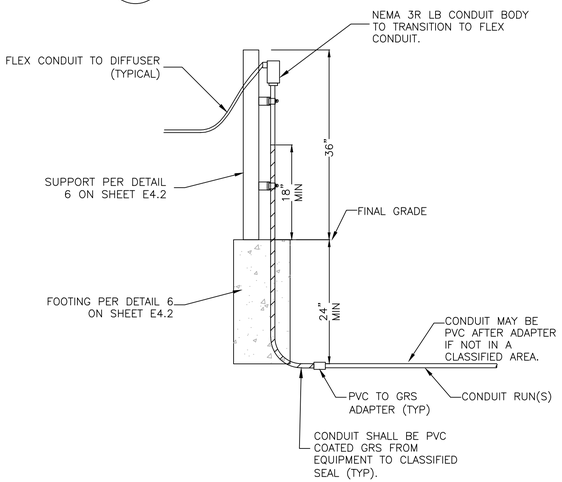

3 CONDUIT TO EQUIPMENT SUPPORT DETAIL

NO SCALE

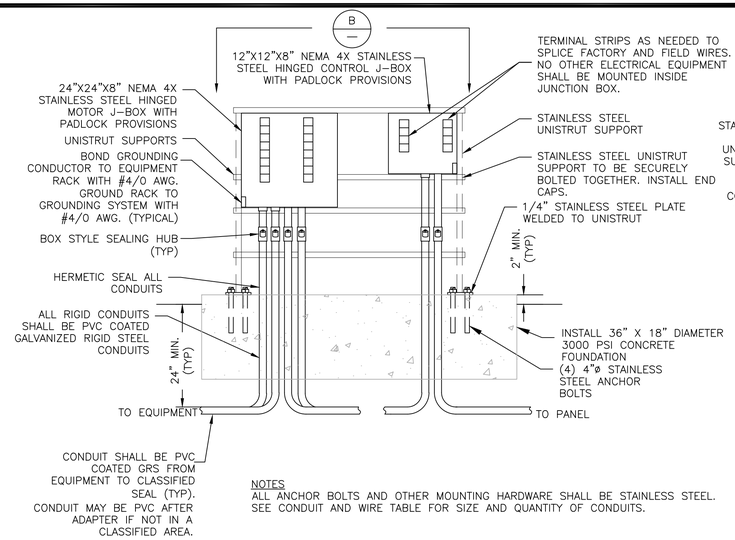

NOTES
ALL ANCHOR BOLTS AND OTHER MOUNTING HARDWARE SHALL BE STAINLESS STEEL.
SEE CONDUIT AND WIRE TABLE FOR SIZE AND QUANTITY OF CONDUITS.

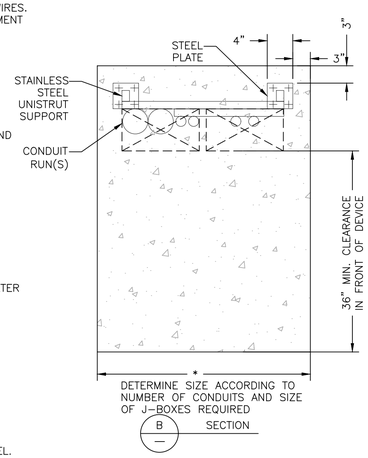

NOTES:
1) A 36" MIN. CLEARANCE SHALL BE MAINTAINED IN FRONT OF ALL ELECTRICAL DEVICES.

2) ALL EXPOSED CONDUITS SHALL BE GALVANIZED RIGID STEEL TO BELOW GRADE PAST 90° BEND TO PVC/GRS ADAPTER UNLESS OTHERWISE NOTED ON PLANS. WRAP PER GENERAL NOTE 11 ON SHEET E1.1.

3) ALL JUNCTION BOXES SHALL BE NEMA-4X STAINLESS STEEL UNLESS OTHERWISE NOTED ON PLANS.

4) ALL BARE STEEL COMPONENTS SHALL BE PRIMED AND PAINTED TAN TO MATCH SURROUNDING EQUIPMENT.

5) SEE RESPECTIVE SITE PLAN FOR CONDUIT SIZE AND QUANTITY DESIGNATIONS.

6)CONTRACTOR SHALL MAINTAIN AN 18" AIR GAP FOR CONDUIT RUN COMING FROM WET WELL. AIR GAP SHALL BE LOCATED AT THE JUNCTION BOX. CONTRACTOR SHALL INSTALL HERMETIC SEALS AT THE END OF THE THE CONDUIT RUNS INTO VAULT WALL TO PREVENT MOISTURE FROM ENTERING CONDUIT. CONDUIT SHALL BE CONTINUOUS GRS FROM WET WELL TO AIR GAP.

4 STANCHION MOUNTED JUNCTION BOX

NO SCALE

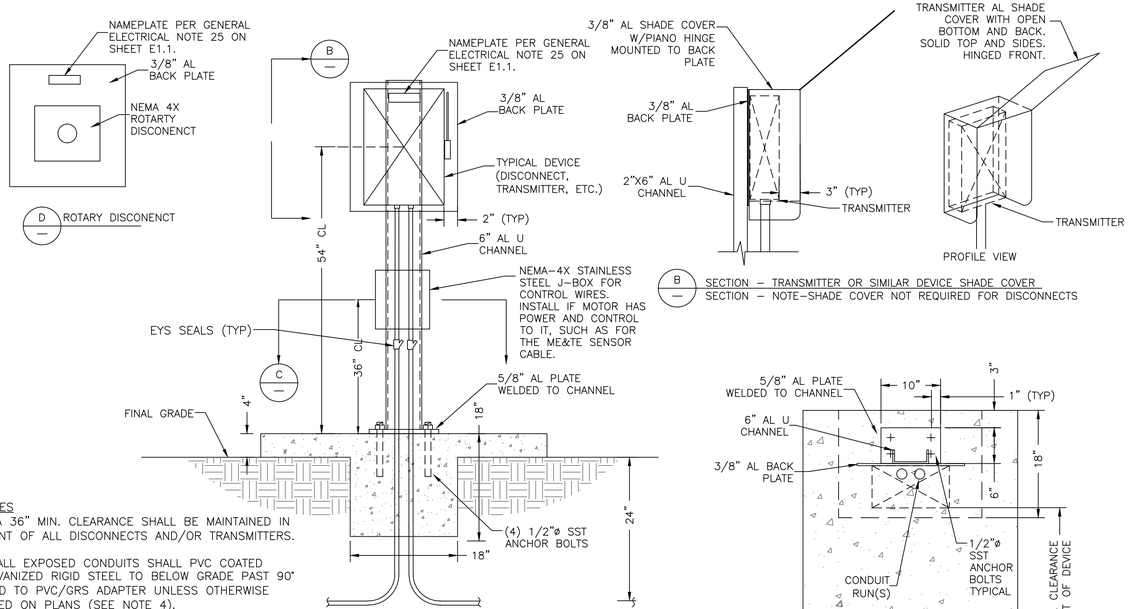

NOTES
1) A 36" MIN. CLEARANCE SHALL BE MAINTAINED IN FRONT OF ALL DISCONNECTS AND/OR TRANSMITTERS.

2) ALL EXPOSED CONDUITS SHALL PVC COATED GALVANIZED RIGID STEEL TO BELOW GRADE PAST 90° BEND TO PVC/GRS ADAPTER UNLESS OTHERWISE NOTED ON PLANS (SEE NOTE 4).

3) ALL DISCONNECTS SHALL BE NEMA-4X STAINLESS STEEL UNLESS OTHERWISE NOTED ON PLANS.

4)CONTRACTOR SHALL MAINTAIN 18" AIR GAP ON CONDUIT RUN COMING FROM WET WELL. AIR GAP SHALL BE LOCATED AT THE JUNCTION BOX. AIR GAP SHALL CONFORM TO THE NATIONAL ELECTRICAL CODE FOR CLASS 1, DIVISION 1 HAZARDOUS AREA. CONTRACTOR SHALL INSTALL HERMETIC SEALS AT THE END OF THE THE CONDUIT RUNS INTO VAULT WALL TO PREVENT MOISTURE FROM ENTERING CONDUIT. CONDUIT SHALL BE CONTINUOUS GRS FROM WET WELL TO 18" AIR GAP.

5 DISCONNECT/CONTROL NEMA 4X J-BOX DETAIL

NO SCALE

WRIGHT engineering corporation
ELECTRICAL ENGINEERING AND DESIGN
165 EAST CHILTON DRIVE
CHANDLER, ARIZONA 85225
PHONE: 480.497.5829
FAX: 480.497.5807
www.wrightengineering.us
Wright Project # 23319

CALL TWO WORKING DAYS BEFORE YOU DIG
602-263-1100
1-800-STAKE-IT
(OUTSIDE MARICOPA COUNTY)

NO	BY	DATE	REVISIONS	DATE	APP.

Registered Professional Engineer (Electrical) Certificate No. 73954 JASON BILLEDEAU 09-30-27 Expires 9-30-27

PREPARED BY: WRIGHT ENGINEERING
DESIGNED BY: JHB
DRAWN BY: XAG
CHECKED BY: JHB
SCALE: AS NOTED
DATE: NOV 2025
JOB NO. B614

THESE DRAWINGS ARE THE PROPERTY OF P.A.C.E. AND SHALL NOT BE REPRODUCED IN ANY MANNER NOR BE USED FOR CONSTRUCTION UNLESS STAMPED "ISSUED FOR CONSTRUCTION".

TITLE: ELECTRICAL DETAILS II

JOB: TOWN OF JEROME WASTEWATER TREATMENT PLANT YAVAPAI CO. AZ

ISSUED FOR BID

PREPARED BY:
PACE
Advanced Water Engineering
8723 E. Via de Ventura, Suite 100, SCOTTSDALE, CA 85258
P: (480) 991-3955 | www.pacewater.com

SHEET
E4.2
85 OF 99 SHEETS

JOB NO. B614

I:\2025\25-xx-xxxx WWTP\25-19 E4.2 - Typ Det 4.dwg, Typ. Det. E4.2 - by jacob on 11/24/25 at 3:56:10 PM

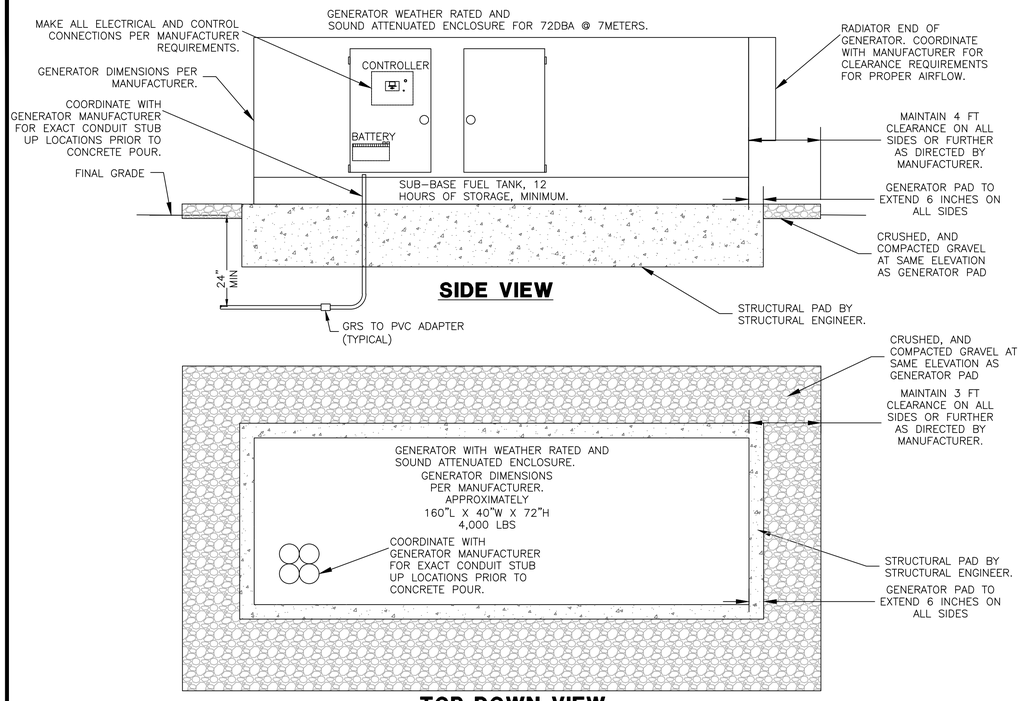

1 GENERATOR INSTALLATION DETAIL

NO SCALE

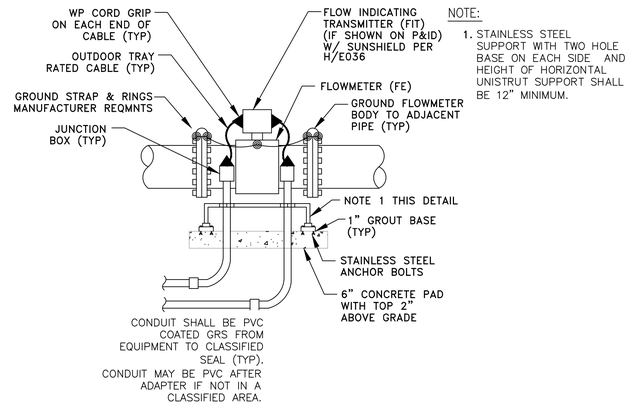

NOTE:

1. STAINLESS STEEL SUPPORT WITH TWO HOLE BASE ON EACH SIDE AND HEIGHT OF HORIZONTAL UNISTRUT SUPPORT SHALL BE 12" MINIMUM.

4 FLOWMETER DETAIL

NO SCALE

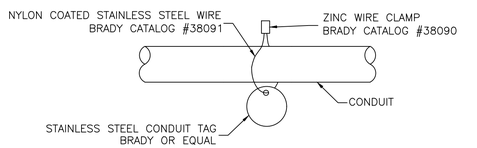

2 CONDUIT TAG DETAIL

NO SCALE

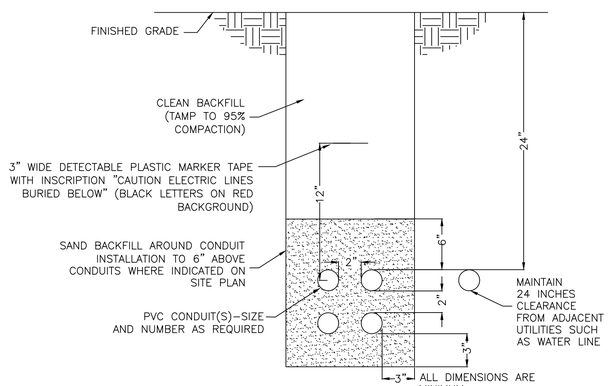

NOTE:

1) THIS CONDUIT DUCT BANK DETAIL SHALL BE REFERENCED FOR ALL UNDER GROUND CONDUIT INSTALLATIONS.

2) INSTALL CONDUIT SPACERS EVERY 6 FT. MAX., CARLON OR EQUAL.

3 CONDUIT DUCT BANK INSTALLATION DETAIL

NO SCALE

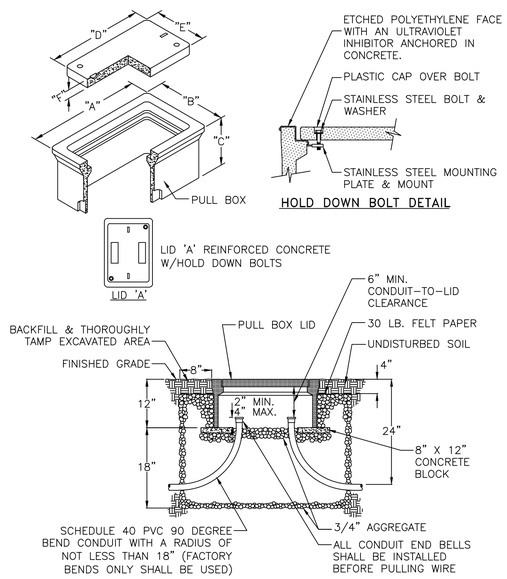

5 PULL BOX INSTALLATION DETAIL

NO SCALE

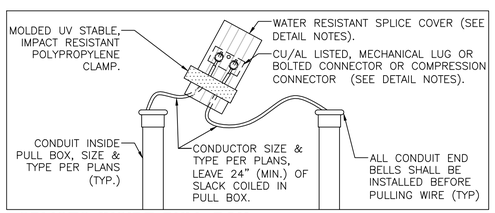

SPLICES INSIDE PULL BOX

DETAIL NOTES:

1. THE PULL BOX SHALL BE MADE OF A HIGH DENSITY REINFORCED CONCRETE MATERIAL WITH END & SIDE KNOCKOUTS, & NON-SETTLING SHOULDERS TO MAINTAIN GRADE, MANUFACTURED WITH APPROXIMATE DIMENSIONS AS SHOWN.
2. STEEL REINFORCEMENT SHALL BE AS REGULARLY USED IN STANDARD PRODUCTS OF THE RESPECTIVE MANUFACTURER.
3. COVER LETTERING SHALL BE 1" LETTERS CAST IN STANDARD MARKINGS: "ELECTRIC" OR "HIGH VOLTAGE" OR "COMMUNICATIONS". AS REQUIRED.
4. THE PULL BOX SHALL HAVE AN ETCHED POLYETHYLENE FACE WITH AN ULTRAVIOLET INHIBITOR ANCHORED IN CONCRETE.
5. ALL CABLE & CONDUCTOR SPLICES MADE USING CU/AL LISTED, MECHANICAL LUG OR BOLTED CONNECTOR OR COMPRESSION CONNECTOR, (TYCO ELECTRONICS, NSI INDUSTRIES, ILSCO OR APPROVED EQUAL). CONNECTION TO BE INSULATED & MADE WATER RESISTANT WITH TYCO ELECTRONICS GELCAP-SL, NSI INDUSTRIES ESSLK-2/0 OR 3M SCOTCHCAST SPLICE KIT 85 SERIES.

DATA TABLE

PULLBOX TYPE	PULLBOX LENGTH	PULLBOX WIDTH	PULLBOX HEIGHT	LID LENGTH	LID WIDTH	LID HEIGHT
	"A"	"B"	"C"	"D"	"E"	"F"
#3-1/2	19-3/4"	14-1/4"	12"	15-1/2"	10"	1-3/4"
#5	25-1/8"	15-5/8"	12"	20-3/4"	10-5/8"	2"
#7	35"	22"	12"	30-1/2"	17-1/2"	2"
#9	40-1/2"	28-1/4"	18"	35-1/2"	24"	3"

WRIGHT engineering corporation
ELECTRICAL ENGINEERING AND DESIGN
165 EAST CHILTON DRIVE
CHANDLER, ARIZONA 85225
PHONE: 480.497.5829
FAX: 480.497.5807
www.wrightengineering.us
Wright Project # 23319

CALL TWO WORKING DAYS BEFORE YOU DIG
602-263-1100
1-800-STAKE-IT
(OUTSIDE MARICOPA COUNTY)

NO	BY	DATE	REVISIONS	DATE	APP.

THESE DRAWINGS ARE THE PROPERTY OF P.A.C.E. AND SHALL NOT BE REPRODUCED IN ANY MANNER NOR BE USED FOR CONSTRUCTION UNLESS STAMPED "ISSUED FOR CONSTRUCTION".

Registered Professional Engineer (Electrical) Certificate No. 73954 JASON BILLEDT Date Signed 9-30-25 Expires 9-30-27

PREPARED BY: WRIGHT ENGINEERING
DESIGNED BY: JHB
DRAWN BY: XAG
CHECKED BY: JHB
SCALE: AS NOTED
DATE: NOV 2025
JOB NO. B614

TITLE: ELECTRICAL DETAILS III

JOB: TOWN OF JEROME WASTEWATER TREATMENT PLANT YAVAPAI CO. AZ

ISSUED FOR BID

PREPARED BY:
PACE
Advanced Water Engineering
8123 E. VIA DE COMERCIO, BLDG. 3, SCOTTSDALE, CA 85258
P: (480) 991-3555 | www.pacewater.com

SHEET E4.3
86 OF 99 SHEETS

JOB NO. B614

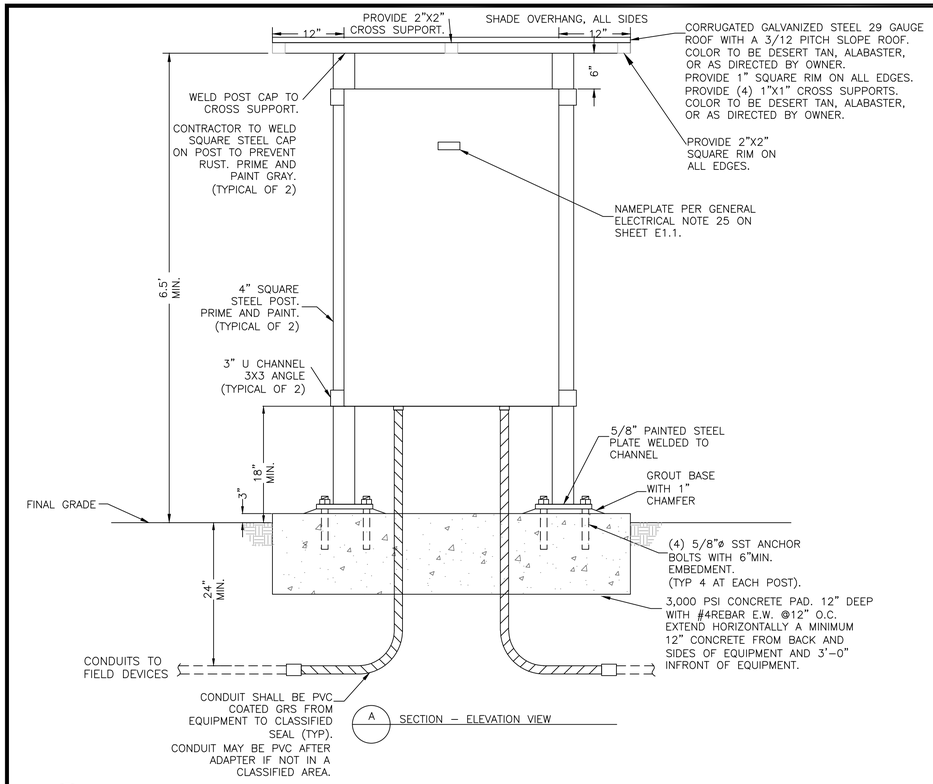

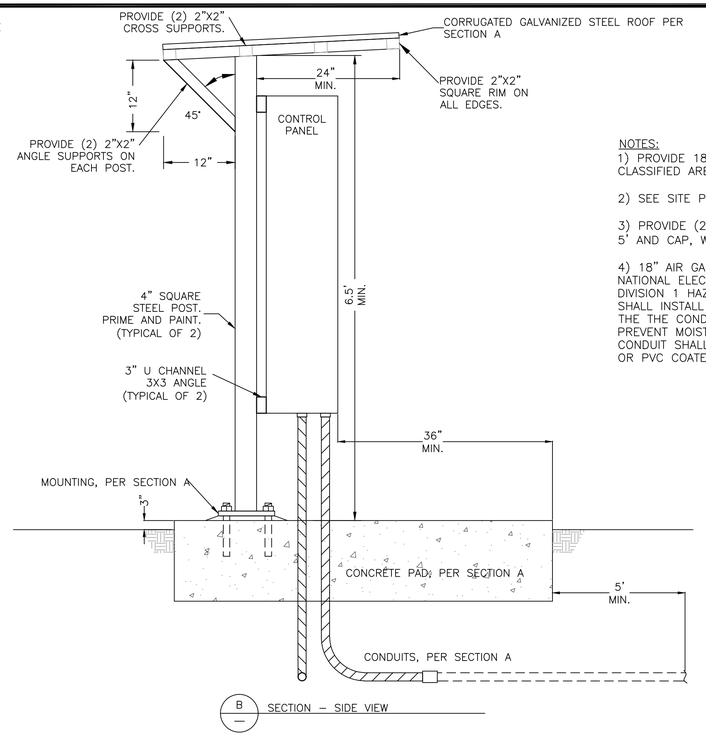

NOTES:

1) PROVIDE 18" AIR GAP WHEN CONDUITS ENTER CLASSIFIED AREAS.

2) SEE SITE PLAN FOR QUANTITY OF CONDUITS.

3) PROVIDE (2) 1.5" SPARE CONDUITS, EXTEND 5' AND CAP, WITH DETECTABLE PULL ROPE.

4) 18" AIR GAP SHALL CONFORM TO THE NATIONAL ELECTRICAL CODE FOR CLASS 1, DIVISION 1 HAZARDOUS AREA. CONTRACTOR SHALL INSTALL HERMETIC SEALS AT THE END OF THE THE CONDUIT RUNS INTO VAULT WALL TO PREVENT MOISTURE FROM ENTERING CONDUIT. CONDUIT SHALL BE CONTINUOUS GRS WRAPPED OR PVC COATED FROM WET WELL TO AIR GAP.

1 FREESTANDING CONTROL PANEL

NO SCALE

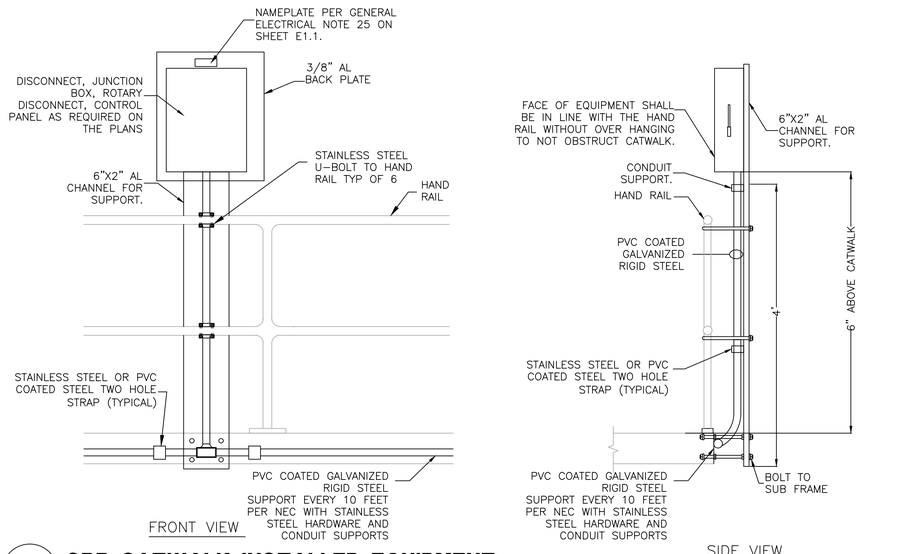

2 SBR CATWALK INSTALLED EQUIPMENT

NO SCALE

NO	BY	DATE	REVISIONS	DATE	APP.

Registered Professional Engineer (Retired) Certificate No. 73954 JASON BILLETDEAUX Date Signed 9-30-25 Expires 9-30-27

PREPARED BY: WRIGHT ENGINEERING
DESIGNED BY: JHB
DRAWN BY: XAG
CHECKED BY: JHB
SCALE: AS NOTED
DATE: NOV 2025
JOB NO.: B614

TITLE: ELECTRICAL DETAILS IV

JOB: TOWN OF JEROME WASTEWATER TREATMENT PLANT
YAVAPAI CO. AZ

THESE DRAWINGS ARE THE PROPERTY OF P.A.C.E. AND SHALL NOT BE REPRODUCED IN ANY MANNER NOR BE USED FOR CONSTRUCTION UNLESS STAMPED "ISSUED FOR CONSTRUCTION".

ISSUED FOR BID

PREPARED BY:
PACE
Advanced Water Engineering
8712 E. Via de Commercio, Suite 3A, Scottsdale, CA 85258
P: (408) 991-3595 | www.pacewater.com

WRIGHT engineering corporation
ELECTRICAL ENGINEERING AND DESIGN
165 EAST CHILTON DRIVE
CHANDLER, ARIZONA 85225
PHONE: 480.497.5829
FAX: 480.497.5807
www.wrightengineering.us
Wright Project # 23319

CALL TWO WORKING DAYS BEFORE YOU DIG
602-263-1100
1-800-STAKE-IT
(OUTSIDE MARICOPA COUNTY)

SHEET
E4.4
87 OF 99 SHEETS

JOB NO. B614

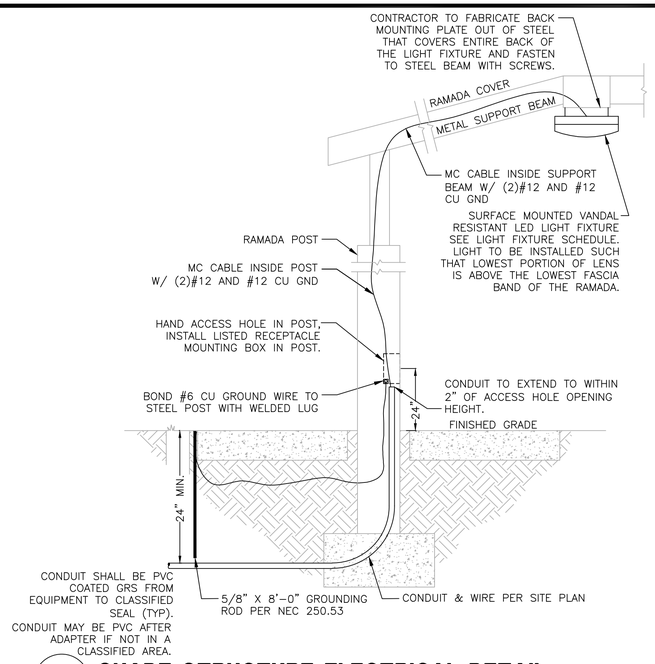

1 SHADE STRUCTURE ELECTRICAL DETAIL

NO SCALE

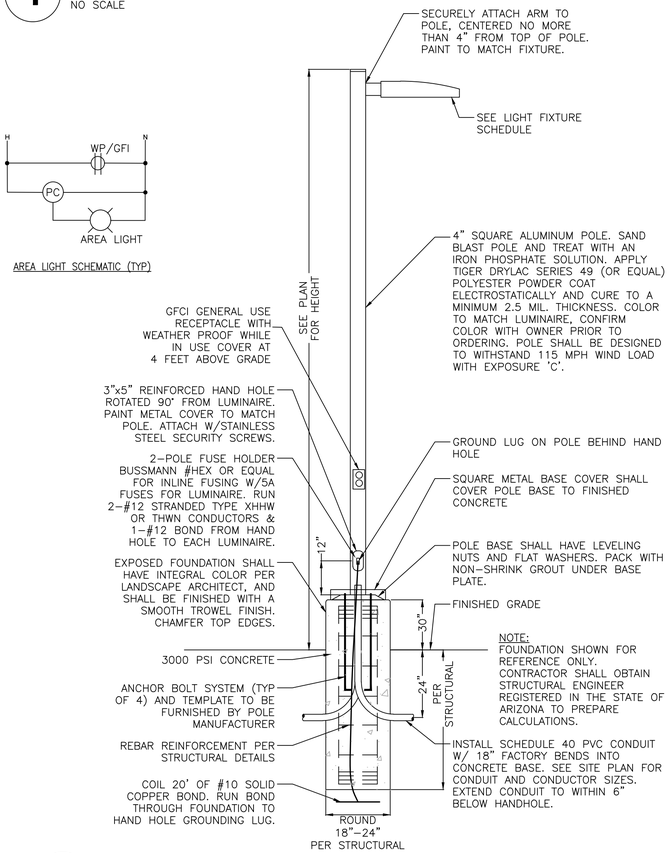

2 AREA LIGHT DETAIL

NO SCALE

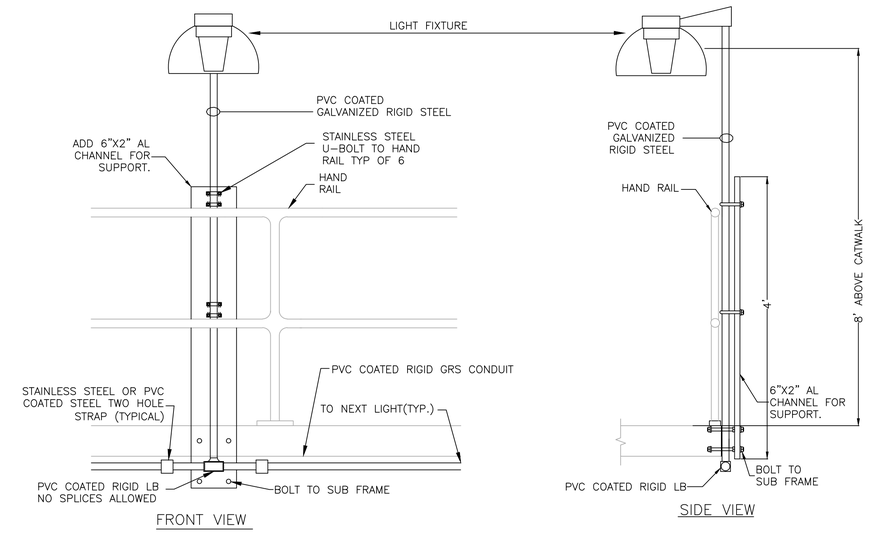

3 SBR LIGHT DETAIL

NO SCALE

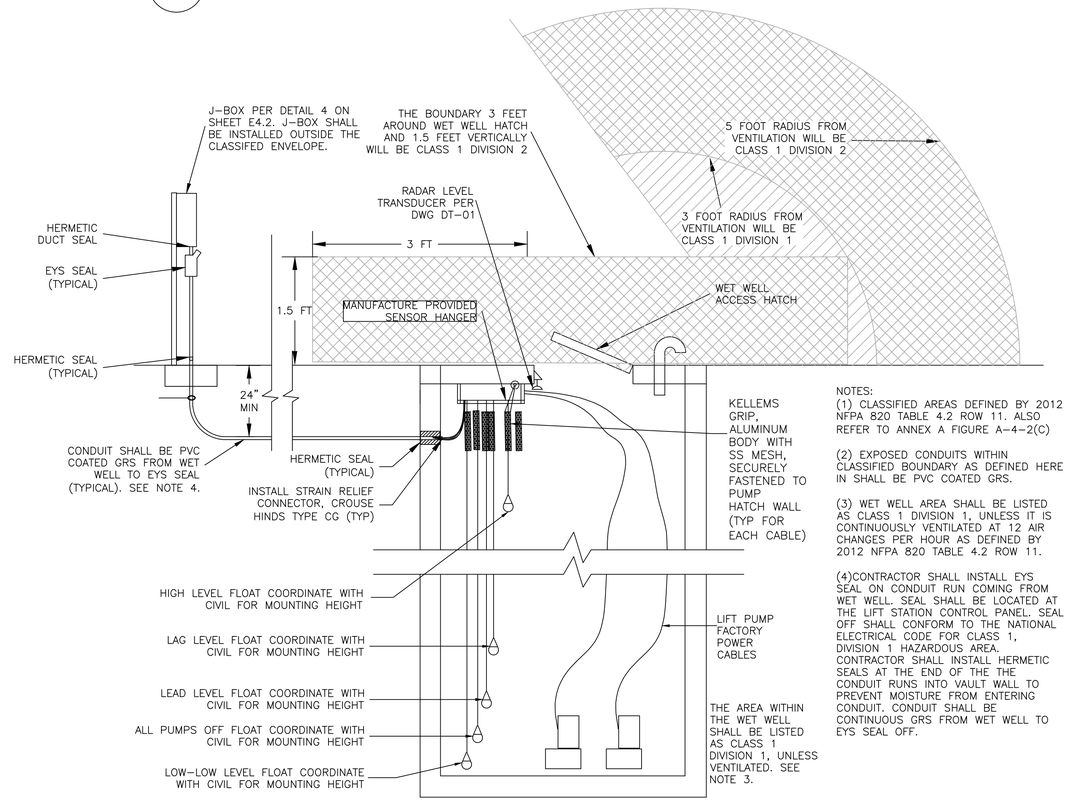

NOTES:
(1) CLASSIFIED AREAS DEFINED BY 2012 NFPA 820 TABLE 4.2 ROW 11. ALSO REFER TO ANNEX A FIGURE A-4-2(C)

(2) EXPOSED CONDUITS WITHIN CLASSIFIED BOUNDARY AS DEFINED HERE IN SHALL BE PVC COATED GRS.

(3) WET WELL AREA SHALL BE LISTED AS CLASS 1 DIVISION 1, UNLESS IT IS CONTINUOUSLY VENTILATED AT 12 AIR CHANGES PER HOUR AS DEFINED BY 2012 NFPA 820 TABLE 4.2 ROW 11.

(4)CONTRACTOR SHALL INSTALL EYS SEAL ON CONDUIT RUN COMING FROM WET WELL. SEAL SHALL BE LOCATED AT THE LIFT STATION CONTROL PANEL. SEAL OFF SHALL CONFORM TO THE NATIONAL ELECTRICAL CODE FOR CLASS 1, DIVISION 1 HAZARDOUS AREA. CONTRACTOR SHALL INSTALL HERMETIC SEALS AT THE END OF THE THE CONDUIT RUNS INTO VAULT WALL TO PREVENT MOISTURE FROM ENTERING CONDUIT. CONDUIT SHALL BE CONTINUOUS GRS FROM WET WELL TO EYS SEAL OFF.

4 LIFT STATION DETAIL

NO SCALE

NOTE
LEVEL CONTROLS SHOWN FOR REFERENCE ONLY, MOUNT LEVEL CONTROLS PER CIVIIL/MECHANICAL DRAWINGS.

WRIGHT engineering corporation
ELECTRICAL ENGINEERING AND DESIGN
165 EAST CHILTON DRIVE
CHANDLER, ARIZONA 85225
PHONE: 480.497.5829
FAX: 480.497.5807
www.wrightengineering.us
Wright Project # 23319

CALL TWO WORKING DAYS BEFORE YOU DIG
602-263-1100
1-800-STAKE-IT
(OUTSIDE MARICOPA COUNTY)

NO	BY	DATE	REVISIONS	DATE	APP.

Registered Professional Engineer (Electrical) Certificate No. 73954 JASON BILLSTEDT 3-24-27 Expires 3-31-27

PREPARED BY: WRIGHT ENGINEERING
DESIGNED BY: JHB
DRAWN BY: XAG
CHECKED BY: JHB
DATE: NOV 2025
JOB NO.: B614
SCALE: AS NOTED

THESE DRAWINGS ARE THE PROPERTY OF P.A.C.E. AND SHALL NOT BE REPRODUCED IN ANY MANNER NOR BE USED FOR CONSTRUCTION UNLESS STAMPED "ISSUED FOR CONSTRUCTION".

TITLE: ELECTRICAL DETAILS V

JOB: TOWN OF JEROME WASTEWATER TREATMENT PLANT — YAVAPAI CO. AZ

ISSUED FOR BID

PREPARED BY:
PACE
Advanced Water Engineering
8723 E. VIA DE COMERCIO, SUITE 1, SCOTTSDALE, CA 85258
P. (480) 991-3595 | www.pacewater.com

SHEET
E4.5
88 OF 99 SHEETS

JOB NO. B614

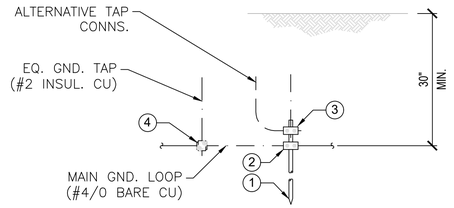

BILL OF MATERIALS		
NO.	DESCRIPTION	QTY
1	GROUND ROD, 3/4" DIA. x 10', COPPER-CLAD STEEL	1
2	GROUND ROD CONNECTOR (5/8"-3/4", 2/0 SOL-250) BURNDY #GAR6429 OR EQUAL.	1
3	GROUND ROD CONNECTOR (5/8"-3/4", #4 SOL-2/0) BURNDY #GAR6426 OR EQUAL.	1
4	GROUND CABLE CONNECTOR (#2/0-250 TO #4-#2/0) BURNDY #GX2926 OR EQUAL.	1

1 GROUND ROD INSTALLATION DETAIL
NO SCALE

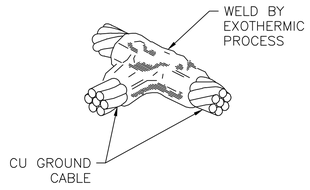

2 GROUND RING CONNECTION DETAIL
NO SCALE

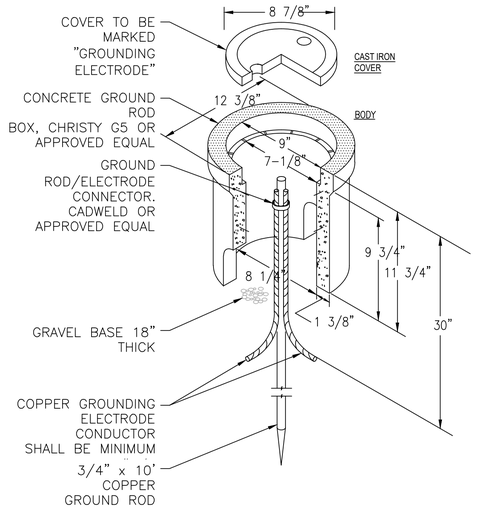

4 CONCRETE GROUND ROD INSPECTION DETAIL
NO SCALE

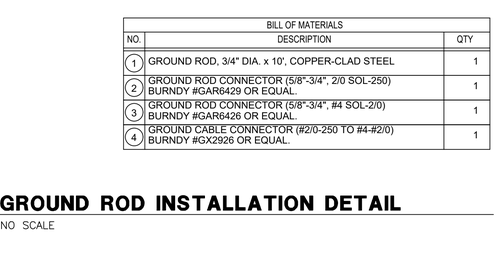

BILL OF MATERIALS		
NO.	DESCRIPTION	QTY
1	#4 RE-BAR, 1/2" DIA. – USE GND. CONN. BURNDY #GAR1126	1
2	#5 OR #6 RE-BAR, 5/8" OR 3/4"DIA. – USE GND. CONN. BURNDY #GAR6426	1
3	#7 OR #8 RE-BAR, 7/8" OR 1"DIA. – USE GND. CONN. BURNDY #GAR1426	1

3 GROUND ROD TO REBAR DETAIL
NO SCALE

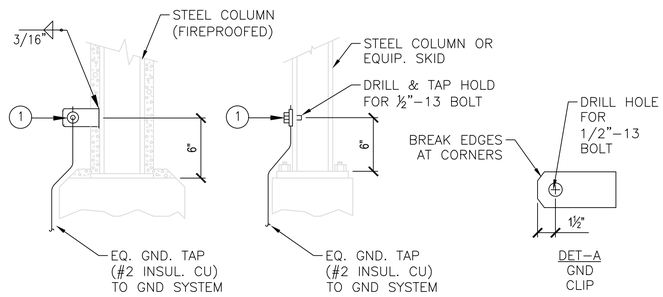

BILL OF MATERIALS		
NO.	DESCRIPTION	QTY
1	SERVIT POST CONNECTOR, 2/C, 1/2"–13 LONG STUD, #2–#2/0 W/ NUT & LOCKWASHER, BURNDY#K2C25B1	1
2	GROUND CLIP, MILD STEEL, 5" x 3" x 1/4" FIELD FABRICATE – SEE DET–A	1

5 GROUNDING CONNECTION - EQUIP/STEEL COLUMN
NO SCALE

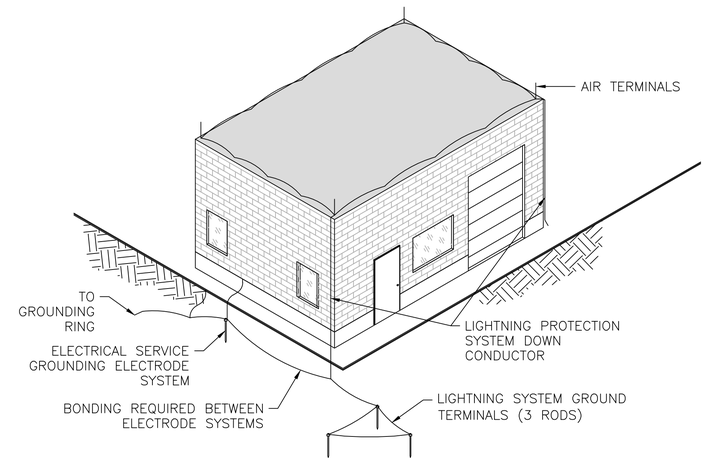

NOTES:
1. THE LIGHTNING ROD IS CONNECTED TO GROUND WITH AT LEAST TWO DOWN CONDUCTORS LOCATED ON OPPOSITE FACADES WHEREVER POSSIBLE.
2. THE DOWN CONDUCTORS MUST BE INSTALLED OUTSIDE THE BUILDING, AVOIDING THE PROXIMITY OF ELECTRICAL CABLES AND GAS. ITS PATH MUST BE AS STRAIGHT AS POSSIBLE, USING THE SHORTEST PATH TO EARTH, AVOIDING ANY SHARP BEND OR LIFT.
3. INSTALL IN ACCORDANCE WITH NFPA 780, NEC 250.60 AND NEC 250.106.
4. DETAIL SHOWN FOR REFERENCE ONLY.

6 LIGHTNING PROTECTION SYSTEM DETAIL
NO SCALE

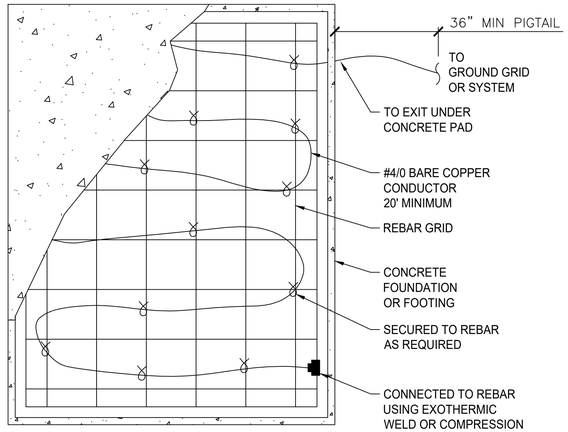

7 CONCRETE GROUNDING DETAIL
NO SCALE

WRIGHT engineering corporation
ELECTRICAL ENGINEERING AND DESIGN
165 EAST CHILTON DRIVE
CHANDLER, ARIZONA 85225
PHONE: 480.497.5829
FAX: 480.497.5807
www.wrightengineering.us
Wright Project # 23319

CALL TWO WORKING DAYS BEFORE YOU DIG
602-263-1100
1-800-STAKE-IT
(OUTSIDE MARICOPA COUNTY)

NO	BY	DATE	REVISIONS	DATE	APP.

Registered Professional Engineer (Electrical) Certificate No. 73954 JASON RILEY LOTT ...24... Expires 9-30-27

PREPARED BY: WRIGHT ENGINEERING
DESIGNED BY: JHB
DRAWN BY: XAG
CHECKED BY: JHB
SCALE: AS NOTED
DATE: NOV 2025
JOB NO. B614

THESE DRAWINGS ARE THE PROPERTY OF P.A.C.E. AND SHALL NOT BE REPRODUCED IN ANY MANNER NOR BE USED FOR CONSTRUCTION UNLESS STAMPED "ISSUED FOR CONSTRUCTION".

TITLE: ELECTRICAL DETAILS VI

JOB: TOWN OF JEROME WASTEWATER TREATMENT PLANT
YAVAPAI CO. AZ

ISSUED FOR BID

PREPARED BY:
PACE
Advanced Water Engineering
8721 E. Via de Ventura, Suite 110, SCOTTSDALE, CA 85258
P: (480) 991-3595 | www.pacewater.com

SHEET
E4.6
89 OF 99 SHEETS

JOB NO. B614

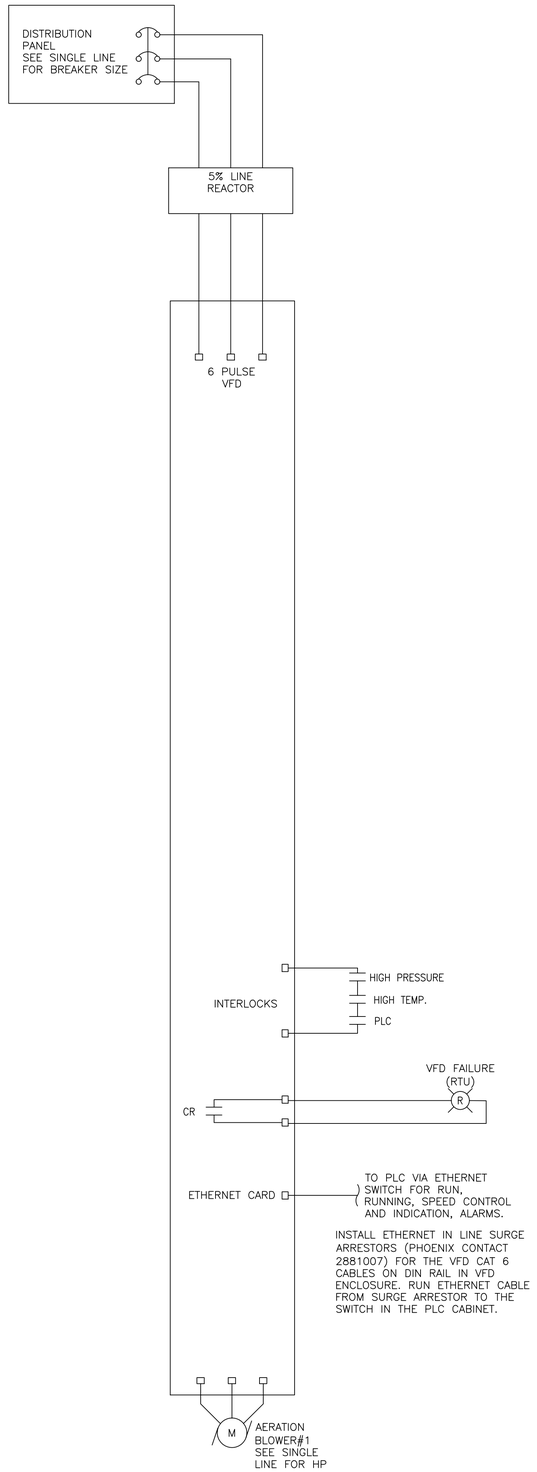

AERATION BLOWER #1 CONTROL SCHEMATIC

24VDC, 120VAC & 480VAC

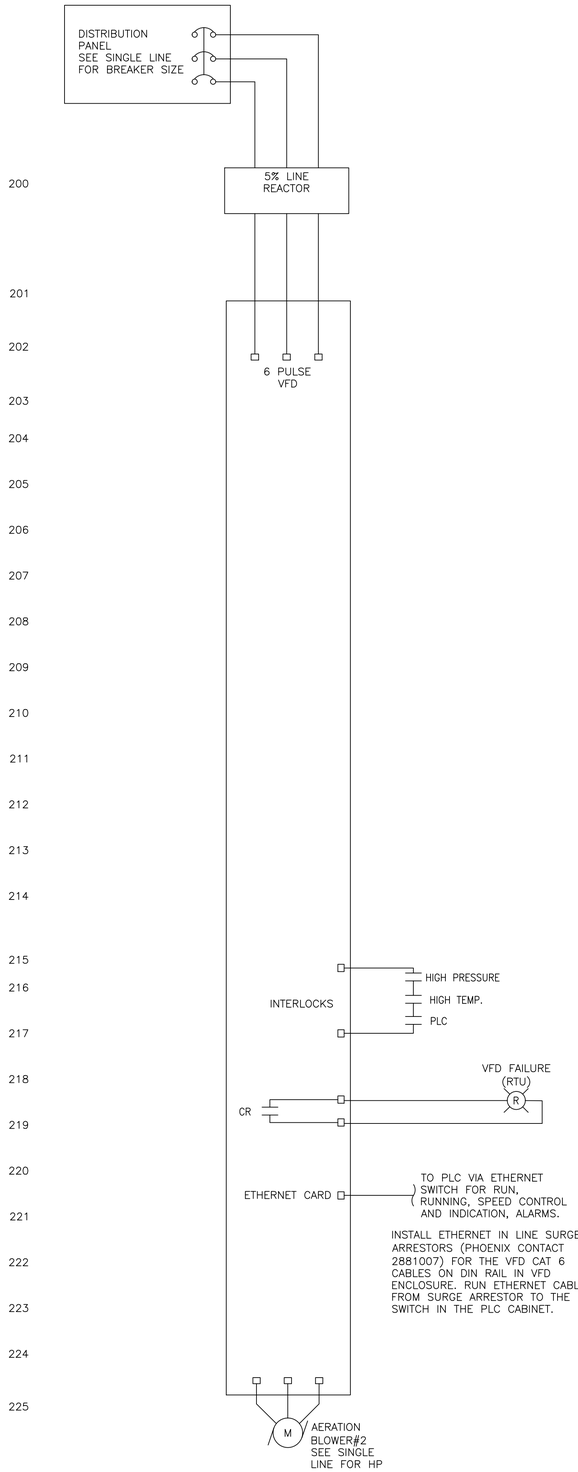

AERATION BLOWER #2 CONTROL SCHEMATIC

24VDC, 120VAC & 480VAC

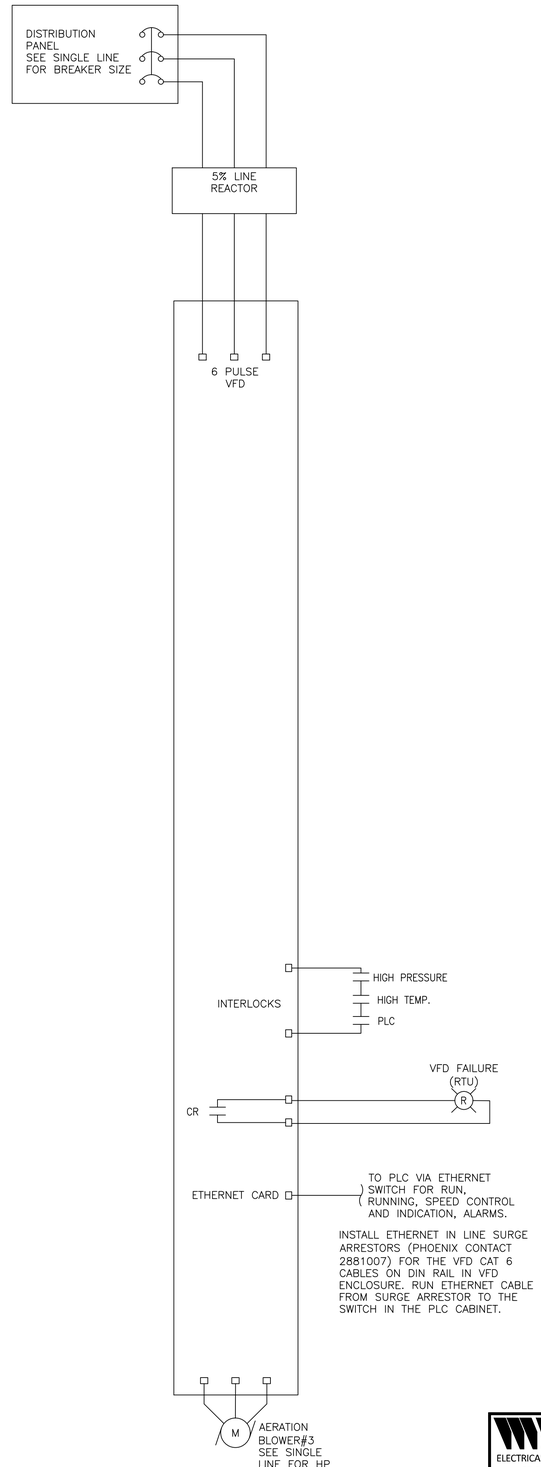

AERATION BLOWER #3 CONTROL SCHEMATIC

24VDC, 120VAC & 480VAC

NO	BY	DATE	REVISIONS	DATE	APP.

Registered Professional Engineer (Electrical) Certificate No. 73954 JARED BILLETDEAUX Date Signed 9-30-25 Expires 9-30-27

PREPARED BY: WRIGHT ENGINEERING
DESIGNED BY: JHB
DRAWN BY: XAG
CHECKED BY: JHB
DATE: NOV 2025
JOB NO.: B614
SCALE: AS NOTED

THESE DRAWINGS ARE THE PROPERTY OF P.A.C.E. AND SHALL NOT BE REPRODUCED IN ANY MANNER NOR BE USED FOR CONSTRUCTION UNLESS STAMPED "ISSUED FOR CONSTRUCTION".

TITLE
ELECTRICAL SCHEMATICS I

JOB
TOWN OF JEROME
WASTEWATER TREATMENT PLANT
YAVAPAI CO. AZ

ISSUED FOR BID

PREPARED BY:
PACE
Advanced Water Engineering
8723 E. Via de Commercio, Suite A, Scottsdale, CA 85258
P. (480) 991-3595 | www.pacewater.com

SHEET
E5.1
90 OF 99 SHEETS

JOB NO. B614

WRIGHT engineering corporation
ELECTRICAL ENGINEERING AND DESIGN
165 EAST CHILTON DRIVE
CHANDLER, ARIZONA 85225
PHONE: 480.497.5829
FAX: 480.497.5807
www.wrightengineering.us
Wright Project # 23319

CALL TWO WORKING DAYS BEFORE YOU DIG
602-263-1100
1-800-STAKE-IT
(OUTSIDE MARICOPA COUNTY)

I:\2025\2515-Jerome WWTP\2515-E.dwg, 10/1/2025 9:41:13 AM, 1:1, jhb

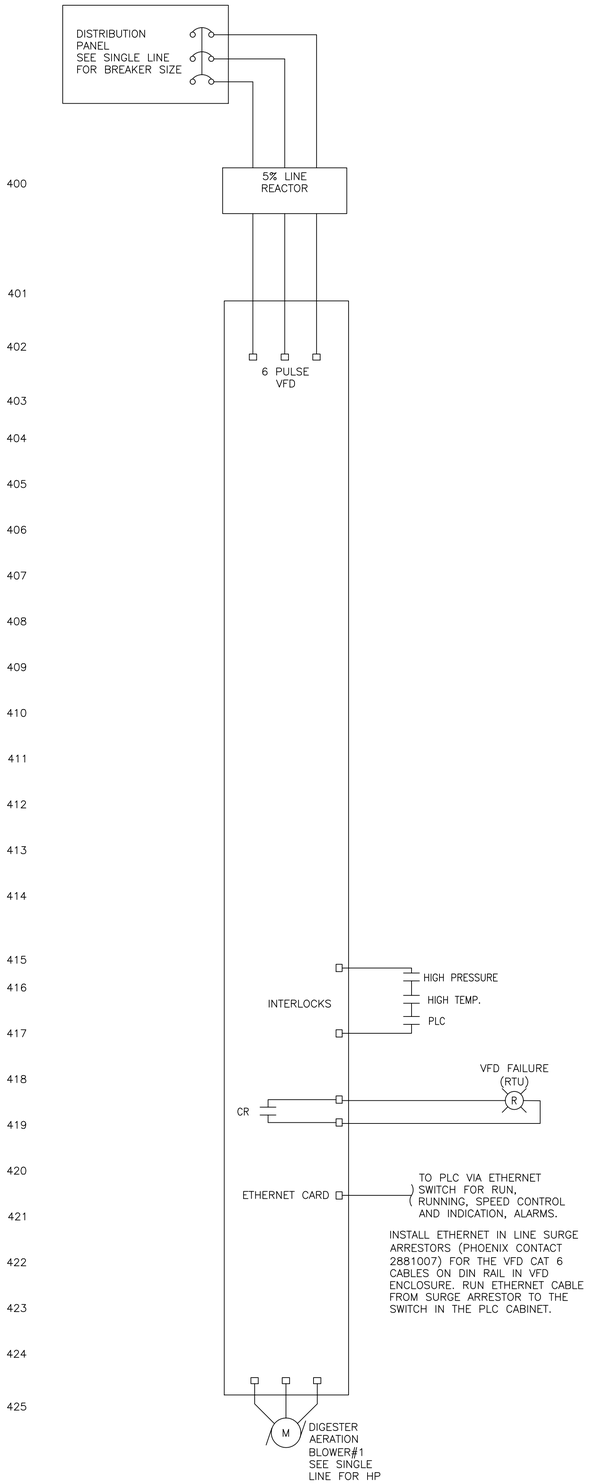

DIGESTER AERATION BLOWER #1 CONTROL SCHEMATIC

24VDC, 120VAC & 480VAC

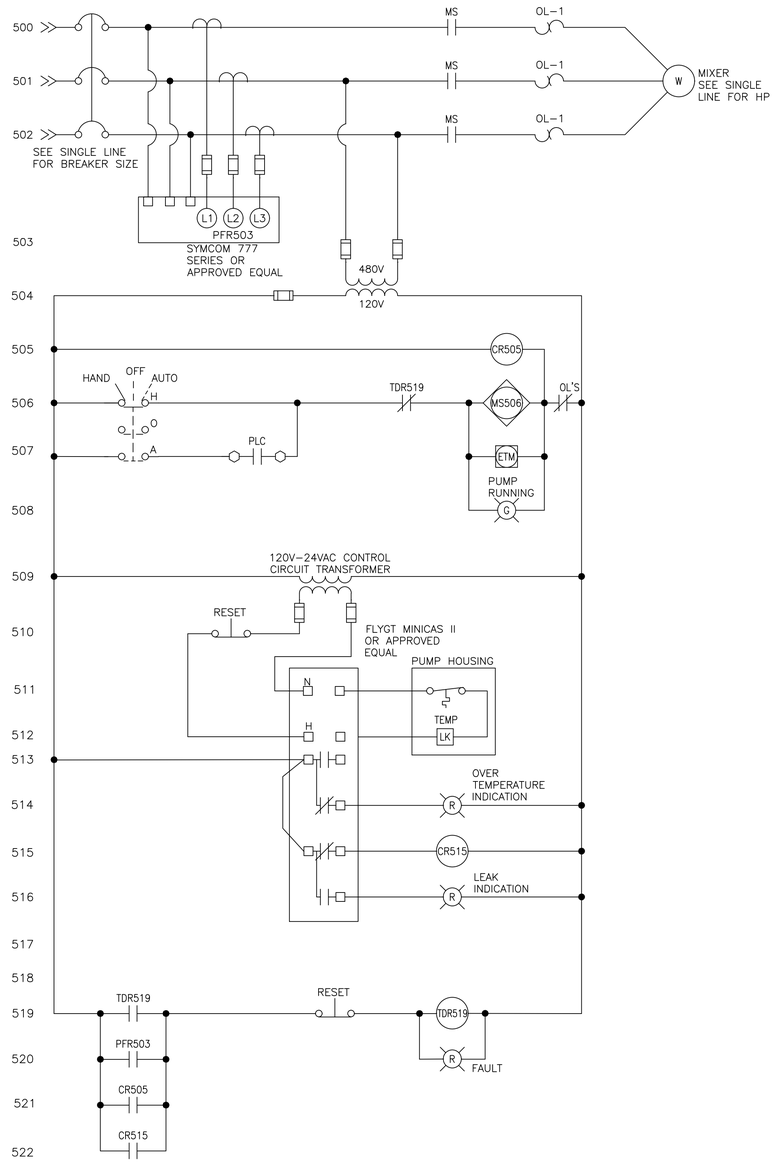

MIXER #1 CONTROL SCHEMATIC

120V

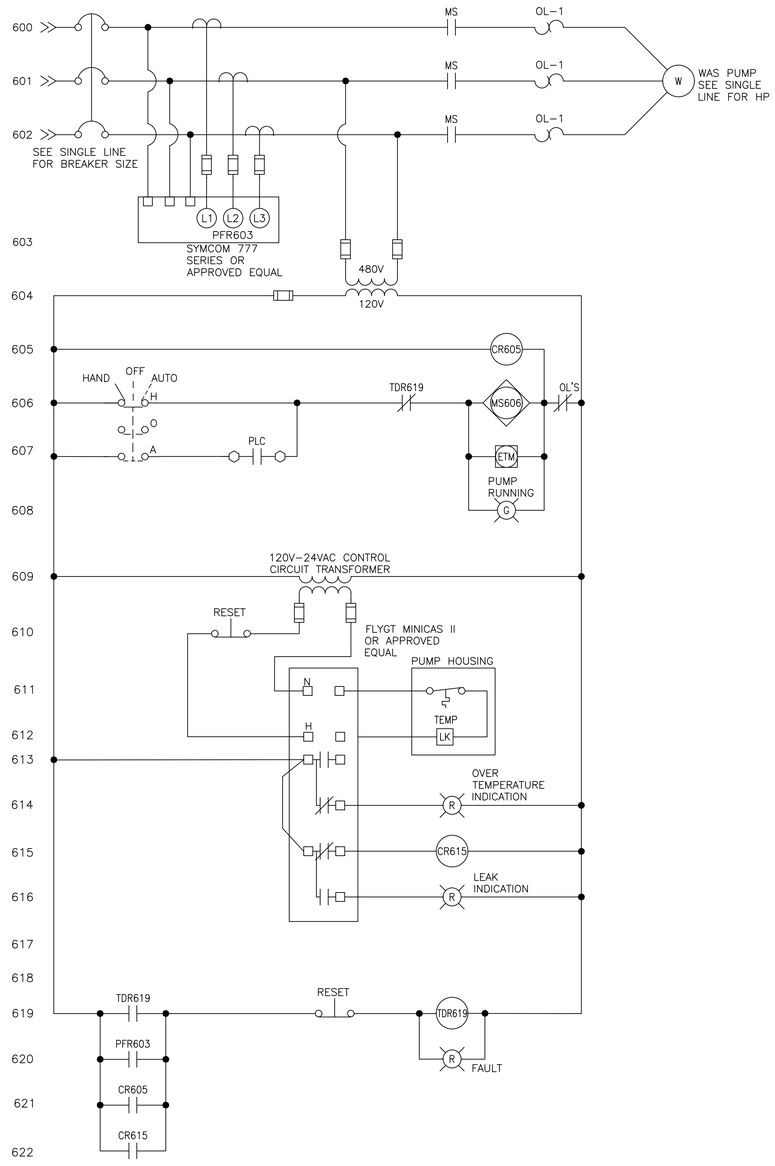

WAS PUMP #1 CONTROL SCHEMATIC

120V

NO	BY	DATE	REVISIONS	DATE	APP.

Registered Professional Engineer (Retired) Certificate No. 73954 JAMES BILLETDEAUX Date Signed 11-30-27 Expires 9-30-27

PREPARED BY: WRIGHT ENGINEERING
DESIGNED BY: JHB
DRAWN BY: XAG
CHECKED BY: JHB
SCALE: AS NOTED
DATE: NOV 2025
JOB NO.: B614

THESE DRAWINGS ARE THE PROPERTY OF P.A.C.E. AND SHALL NOT BE REPRODUCED IN ANY MANNER NOR BE USED FOR CONSTRUCTION UNLESS STAMPED "ISSUED FOR CONSTRUCTION".

TITLE
ELECTRICAL SCHEMATICS II

JOB
TOWN OF JEROME
WASTEWATER
TREATMENT PLANT
YAVAPAI CO. AZ

ISSUED FOR BID

PREPARED BY:
PACE
Advanced Water Engineering
8723 E. VIA de COMMERCIO, SUITE A, SCOTTSDALE, CA 85258
P. (480) 991-3595 | www.pacewater.com

SHEET
E5.2
91 OF 99 SHEETS

JOB NO. B614

WRIGHT engineering corporation
ELECTRICAL ENGINEERING AND DESIGN
165 EAST CHILTON DRIVE
CHANDLER, ARIZONA 85225
PHONE: 480.497.5829
FAX: 480.497.5807
www.wrightengineering.us
Wright Project # 23319

CALL TWO WORKING DAYS BEFORE YOU DIG
602-263-1100
1-800-STAKE-IT
(OUTSIDE MARICOPA COUNTY)

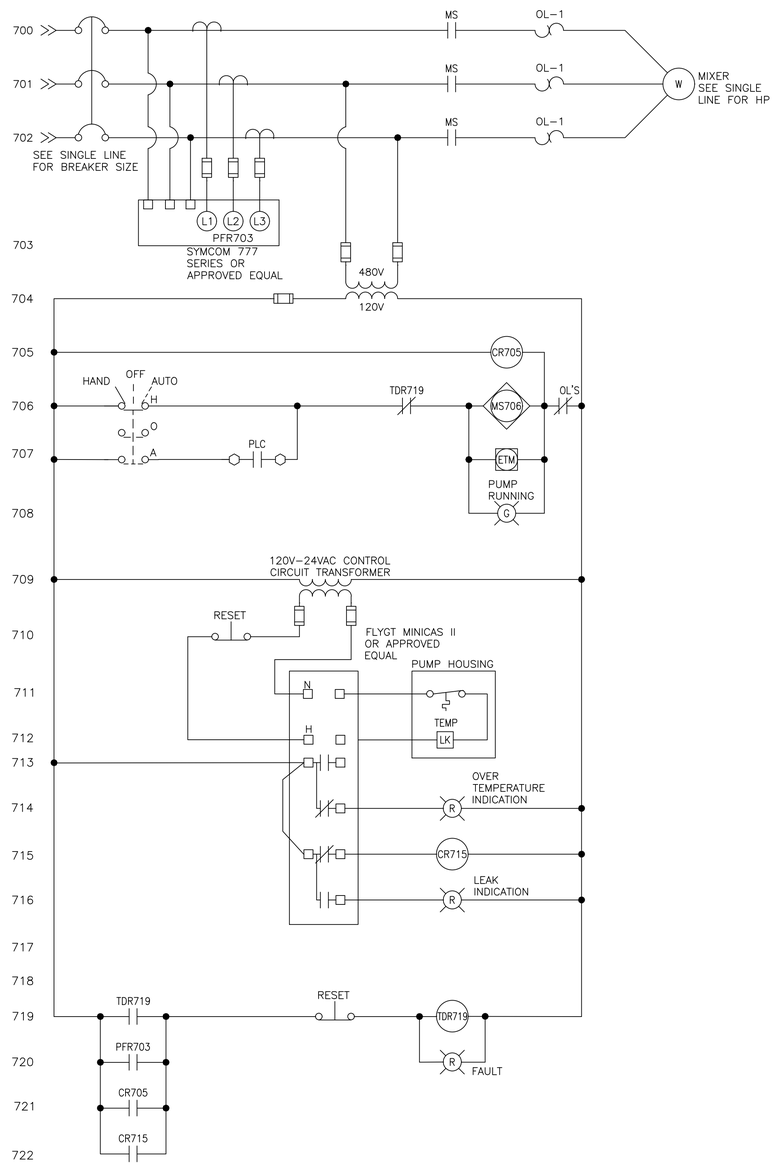

MIXER #2 CONTROL SCHEMATIC

120V

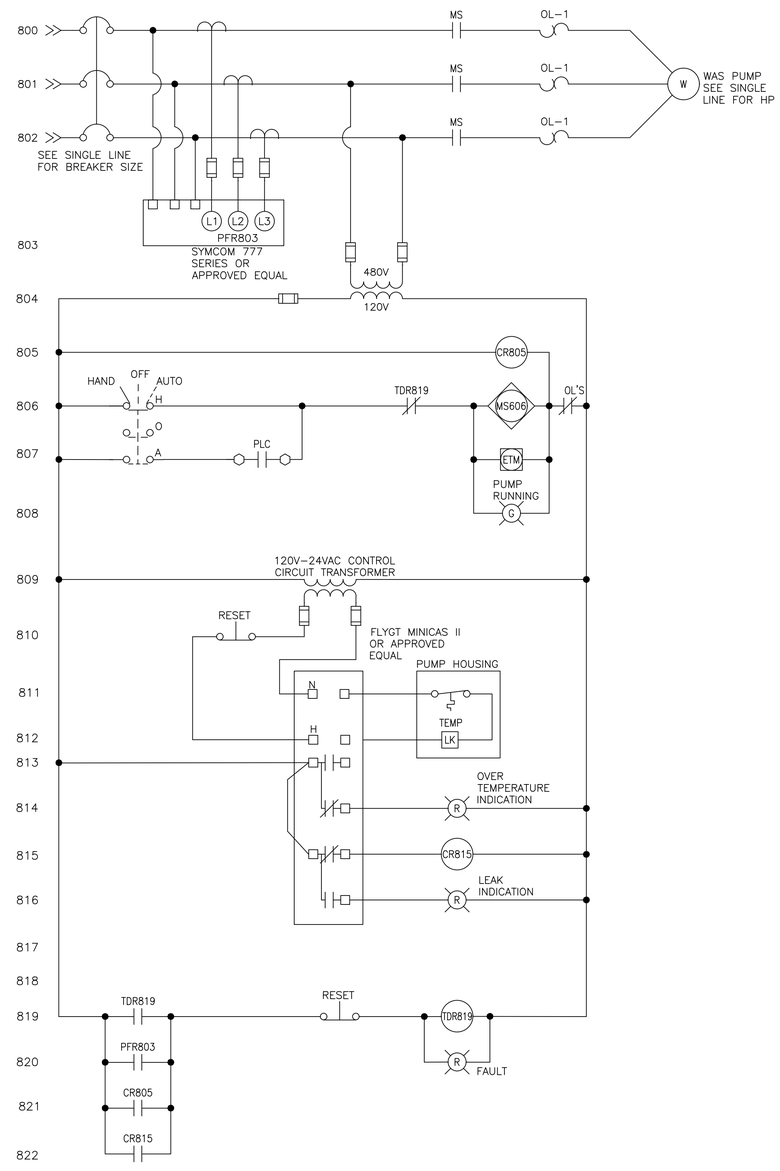

WAS PUMP #2 CONTROL SCHEMATIC

120V

ISSUED FOR BID

NO	BY	DATE	REVISIONS	DATE	APP.

Registered Professional Engineer (Retired)
Certificate No. 73954
JAMES
BELLEDUNT
Date Signed 9-30-25
Expires 9-30-27

PREPARED BY: WRIGHT ENGINEERING
DESIGNED BY: JHB
DRAWN BY: XAG
CHECKED BY: JHB
SCALE: AS NOTED
DATE: NOV 2025
JOB NO.: B614

THESE DRAWINGS ARE THE PROPERTY OF P.A.C.E. AND SHALL NOT BE REPRODUCED IN ANY MANNER NOR BE USED FOR CONSTRUCTION UNLESS STAMPED "ISSUED FOR CONSTRUCTION".

TITLE
ELECTRICAL SCHEMATICS III

JOB
TOWN OF JEROME
WASTEWATER
TREATMENT PLANT
YAVAPAI CO. AZ

PREPARED BY:
PACE
Advanced Water Engineering
8723 E. VIA DE COMMERCIO, 1ST FLOOR, SCOTTSDALE, CA 85258
P.: (480) 991-3595 | www.pacewater.com

SHEET
E5.3
92 OF 99 SHEETS

JOB NO. B614

WRIGHT engineering corporation
ELECTRICAL ENGINEERING AND DESIGN
165 EAST CHILTON DRIVE
CHANDLER, ARIZONA 85225
PHONE: 480.497.5829
FAX: 480.497.5807
www.wrightengineering.us
Wright Project # 23319

CALL TWO WORKING DAYS
BEFORE YOU DIG
602-263-1100
1-800-STAKE-IT
(OUTSIDE MARICOPA COUNTY)

X:\2025\25-Current WWTP\25-15.dwg, Tab: E5.3, by jwood on 11/04/25 at 8:46:43 PM

INSTRUMENT IDENTIFICATION LETTERS (FSS)

	FIRST – LETTER (F)		SUCCEEDING – LETTERS (SS)		
	MEASURED OF INITIATING VARIABLE	MODIFIER	READOUT PASSIVE FUNCTION	OUTPUT FUNCTION	MODIFIER
A	ANALYSIS		ALARM		
B	BURNER, COMBUSTION		USER'S CHOICE	USER'S CHOICE	USER'S CHOICE
C	CONDUCTIVITY			CONTROLLER	
D	DENSITY	DIFFERENTIAL			
E	VOLTAGE		SENSOR, PRIMARY ELEMENT		
F	FLOW RATE	RATIO (FRACTION)			
G	GAUGE, GENERAL		GLASS VIEWING DEVICE		
H	HAND				HIGH, OPENED
I	CURRENT (ELEC.)		INDICATING, INDICATOR		
J	POWER		SCAN		
K	TIME, TIME SCHEDULE	TIME RATE OF CHANGE		CONTROL STATION	
L	LEVEL		LIGHT		LOW, CLOSED
M	MOISTURE, MOTION	MOMENTARY			MIDDLE
N	INTRUSION, STATUS	MOMENTARY	STATUS	USER'S CHOICE	USER'S CHOICE
O	OPERATOR, TORQUE		ORIFICE, RESTRICTION		USER'S CHOICE
P	PRESSURE, VACUUM		POINT (TEST) CONNECTION		
Q	QUANTITY	INTEGRATE, TOTALIZE			
R	RESET, RADIATION		RECORD OR PRINT		
S	SPEED, FREQUENCY	SAFETY		SWITCH	SLOW
T	TEMPERATURE			TRANSDUCER, TRANSMITTER	TEST
U	MULTIVARIABLE		MULTIFUNCTION	MULTIFUNCTION	MULTIFUNCTION
V	VIBRATION, MECH. ANALYSIS			VALVE, DAMPER LOUVER	
W	WEIGHT, FORCE		WELL		
X	SWITCH	X AXIS	UNCLASSIFIED	UNCLASSIFIED	UNCLASSIFIED
Y	EVENT, STATE, PRESENCE	Y AXIS	UNCLASSIFIED	RELAY, COMPUTE, CONVERT	
Z	POSITION DIMENSION	Z AXIS		DRIVER, ACTUATOR, UNCLASSIFIED FINAL CONTROL ELEMENT	

LINE NUMBERING

00" – INFLT – 001 (EXAMPLE)
- SEQUENTIAL LINE NO.
- FLUID CODE
- NOMINAL LINE SIZE

EQUIPMENT NUMBERING

F SS – PP T NN (EXAMPLE)
- ITEM NUMBER
- SERIES (TRAIN) LOCATION
- PROCESS LOCATION
- SUCCEEDING LETTERS (INSTRUMENT ID)
- FIRST LETTER (INSTRUMENT ID)

EXAMPLE:
LT-04032 = SBR TANK #2 LEVEL TRANSDUCER

PROCESS LOCATION (PP)

00	GENERAL/MISCELLANEOUS
01	FIELD
02	POTABLE WATER
03	HEADWORKS
04	SBR AERATION
05	SBR PROCESS
06	DISINFECTION
07	RETURN PS
08	DEWATERING

SERIES LOCATION (TT)

0	SHEET 0
1	SHEET 1
2	SHEET 2
3	SHEET 3
4	SHEET 4
5	SHEET 5
6	SHEET 6
7	SHEET 7
8	SHEET 8

FLUID CODE ABBREVIATION

BP	BYPASS
BW	BACKWASH
CDS	CHEMICAL DOSING
CVR	CONVEYOR
DR	DRAIN
EFFLT	EFFLUENT
EXH	EXHAUST/EXHAUST FAN
FA	FOUL AIR
FLTRT	FILTRATE
GRT	GRIT
INFLT	INFLUENT
MLSS	MIX LIQUOR
OF	OVERFLOW
PA	PROCESS AIR
PW	POTABLE WATER
RAS	RETURN ACTIVATED SLUDGE
RECYC	RECYCLE
RET	RETURN
RNS	RINSE
RW	RECLAIMED WATER
SECPR	SECONDARY PROCESS
SD	SLUDGE DISCHARGE
SNT	SUPERNATANT
SWR	SEWER
TERT	TERTIARY
TW	TREATED WATER
WAS	WASTE ACTIVATED SLUDGE
WTR	WATER
WW	WASTE WATER

EQUIPMENT NUMBERS

EQUIPMENT ABBREVIATIONS	# STARTING AT
PUMPS (PMP)	00–09
MOTORS (M/MXR/BLR)	10–19
VALVES (XV/V/SV)	20–29
LEVEL INST (LT/LS)	30–39
FLOW INST (FT/FS/FE/FIT)	40–49
PRESSURE INST (PT/PS/PG)	50–59
ANALYTICAL (AT)	60–69
MEMBRANE (SMU)	70–79
BUBBLE DIFFUSER (XBD)	80–85
MISCELLANEOUS (MISC)	90–99

LINE CODES

- MAJOR PROCESS LINE
- MINOR PROCESS LINE
- AIR
- ELECTRICAL
- PLC TO HMI COMMUNICATION
- AUTO-DIALER AND PRIORITY LEVEL

00"–XXX — LINE SIZE & NUMBER

PROCESS CONTINUATION WITHIN SCOPE

INSTRUMENT NUMBERING

FSS NPPNNN
- FIRST LETTER (INSTRUMENT ID)
- SUCCEEDING LETTERS (INSTRUMENT ID)
- XX – DEVICE FUNCTION
- EQUIPMENT NUMBER

LINE NUMBER GROUPS

000	OVERFLOW/ BYPASS/ DRAIN/ SUPERNATANT/SCNG
100	INFLUENT/ MIX LIQUOR/ SECONDARY EFFLUENT / EFFLUENT
200	TERTIARY/ REUSE WATER/ BACKWASH/ RECYCLE WATER
300	PERMEATE/ FILTRATE/ CENTRATE
400	PROCESS AIR
500	CHEMICAL DOSING/ POLYMER
600	FOUL AIR
700	WATER/ TREATED WATER/ FILTERED WATER
800	RAS/ SOLIDS
900	WAS/ SCUM/ WASTE WATER/ RAW WATER

EQUIPMENT SUPPLIED BY IDENTIFIER

✳ AQUA-AEROBICS

GENERAL INSTRUMENT OR FUNCTION SYMBOLS

	FIELD MOUNTED	PRIMARY LOCATION ACCESSIBLE TO OPERATOR	PRIMARY LOCATION INACCESSIBLE TO OPERATOR	AUXILIARY LOCATION ACCESSIBLE TO OPERATOR	
DISCRETE INSTRUMENTS	○	⊖	⊖	⊖	HARDWARE INTERLOCK: I
SHARED DISPLAY SHARED CONTROL	○	⊖	⊖	⊖	
COMPUTER FUNCTION	⬡	⬡	⬡	⬡	PLC "SOFT" INTERLOCK: I
PROGRAMMABLE LOGIC CONTROL	◇	◇	◇	◇	

VALVE SYMBOLS

NC NO
- GATE VALVE
- GATE VALVE
- BALL VALVE
- DIAPHRAGM VALVE
- PLUG VALVE
- 3-WAY BALL VALVE
- NEEDLE VALVE/KNIFE GATE
- MUD VALVE
- FLANGED BUTTERFLY VALVE
- LUGGED BUTTERFLY VALVE
- CHECK VALVE
- DOUBLE LEAF CHECK VALVE
- WEIR GATE/TELESCOPE VALVE
- STOP LOG/GATE
- SLUICE/SLIDE GATE

VALVE ACTUATORS

- DIAPHRAGM ACTUATOR
- MOTOR ACTUATOR
- SOLENOID ACTUATOR
- CYLINDER ACTUATOR
- LEVER
- HAND WHEEL
- CHAIN WHEEL

RELIEF DEVICES

- AIR/PRESSURE RELIEF
- VACUUM RELIEF
- RUPTURE DISK FOR PRESSURE RELIEF
- RUPTURE DISK FOR VACUUM RELIEF

REGULATORS

- PRESSURE REDUCING
- BACK PRESSURE
- REGULATOR WITH EXTERNAL PILOT
- DIFFERENTIAL PRESSURE

PIPING SYMBOLS

- Y STRAINER
- BLIND FLANGE
- FUNNEL
- CONCENTRIC REDUCER
- ECCENTRIC REDUCER
- EDUCTOR
- WELDED CAP
- WELDED PIPE END
- SCREWED CAP
- UNION
- CAMLOCK FITTING
- FLEXIBLE LINE
- SPECTACLE BLIND
- EXPANSION JOINT
- TP XX — TIE-IN POINT
- FLEX JOINT

MECHANICAL EQUIPMENT

- METERING PUMP
- CENTRIFUGAL PUMP OR BLOWER
- SUBMERSIBLE PUMP
- TURBINE PUMP
- ROTARY BLOWER
- MIXER
- PROGRESSIVE CAVITY PUMP
- AERATOR
- EXHAUST FAN
- VERTICAL MULTI-STAGE PUMP
- ROTARY LOBE PUMP
- DECANTER
- ULTRA SONIC LEVEL TRANSMITTER
- CHEMICAL INJECTOR
- FLOW METER OR MOTOR
- ROTOMETER
- MAZZI INJECTOR
- VORTEX SHEDDING
- SONIC
- GRINDER
- STATIC MIXER
- SILENCER
- RADAR LEVEL TRANSMITTER
- AV SENSOR
- H/S HORN/ STROBE LIGHT

NOTE: ALL PRESSURE GAUGES AND OTHER SMALL PROCESS MECHANICAL INSTRUMENT EQUIPMENT SHALL BE SUPPLIED WITH ISOLATION VALVES AND ADDITIONAL APPURTENANCES (E.G. PRESSURE PULSATION DAMPENERS/SNUBBERS) AS REQUIRED FOR PROPER OPERATION

ABBREVIATIONS

ACP	ACCESS CONTROL PANEL	NTU	TURBIDITY
AE	ANALYTICAL SENSOR	OC	ODOR CONTROL
AI	ANALOG INPUT	OCA	OPEN–CLOSE–AUTO
AIT	ANALYTICAL INDICATOR TRANSMITTER	OCR	OPEN–CLOSE–REMOTE
AMP	AMPERE	OFS	OFF SPEC.
AO	ANALOG OUTPUT	OIT	OPERATOR INTERFACE TERMINAL
AT	ANALYTICAL TRANSMITTER	OO	ON/OFF (MAINTAINED)
ATS	AUTOMATIC TRANSFER SWITCH	OOA	ON–OFF–AUTO
AV	AIR VELOCITY	OOR	ON–OFF–REMOTE
BLR	BLOWER	OSC	OPEN–STOP–CLOSE
CB	CIRCUIT BREAKER	PE	PRESSURE SENSOR
CBL	COARSE BUBBLE DIFFUSER	PG	PRESSURE GAUGE
CE	CONDUCTIVITY SENSOR (TDS)	PH	POTENTIAL OF HYDROGEN
CFR	CHEMICAL FEEDER	PI	PRESSURE INDICATOR / PULSE INPUT
CG	COMBUSTIBLE GASES	PID	PROPORTIONAL–INTEGRAL–DERIVATIVE
CHV	CHECK VALVE	PIT	PRESSURE INDICATOR TRANSMITTER
CL2	CHLORINE	PLC	PROGRAMMABLE LOGIC CONTROLLER
CMP	COMPACTOR	PMP	PUMP
CON	CONVEYOR	PNL	PANEL
CWC	COMPACTOR/WASHER/CONVEYOR	PO	PULSE OUTPUT
DCS	DISTRIBUTED CONTROL SYSTEM	PPG	POUNDS PER GALLON
DI	DIGITAL INPUT	PPH	POUNDS PER HOUR
DO	DISSOLVED OXYGEN / DIGITAL OUTPUT	PPM	PARTS PER MILLION
DRY	BIOSOLIDS DRYER	PRESS	PRESSURE
DSS	DISTRIBUTION SWITCHBOARD SECTION	PRV	PRESSURE RELIEF OR REDUCING VALVE
DWG	DRAWING	PSH	PRESSURE SWITCH HIGH
EST	EMERGENCY STOP	PSI	POUNDS PER SQUARE INCH
ETM	ELAPSED TIME METER	PSL	PRESSURE SWITCH LOW
EXIST	EXISTING	PT	PRESSURE TRANSMITTER
FBD	FINE BUBBLE DIFFUSER	PV	PROCESS VARIABLE
FC	FAIL CLOSED	REM	REMOTE
FCV	MODULATING CONTROL VALVE	RF	RADIO FREQUENCY
FE	FLOW SENSOR	RIO	REMOTE INPUT–OUTPUT
FeCL2	FERROUS CHLORIDE	RST	RESET
FI	FLOW INDICATOR	RTU	REMOTE TELEMETRY UNIT
FIT	FLOW INDICATOR TRANSMITTER	SES	SERVICE ENTRANCE SECTION
FR	FORWARD–REVERSE	SG	SLUICE GATE
FS	FINE SCREEN / FULL SPEED	SLC	SINGLE LOOP CONTROLLER
FSL	FLOW SWITCH LOW	SLOS	START–LOCK–OFF–STOP
FT	FLOW TRANSMITTER	SO2	SULFUR D
GDR	GRINDER	SMU	SUBMERGED MEMBRANE UNIT
GPD	GALLONS PER DAY	SP	SETPOINT
GPH	GALLONS PER HOUR	SPD	SPEED
GPM	GALLONS PER MINUTE	SPR	SPARE
GRC	GRIT CLASSIFIER	SS	START/STOP (MAINTAINED)
H_2S	HYDROGEN SULFIDE	SSS	SOLID STATE STARTER (SOFT START)
HMI	HUMAN MACHINE INTERFACE	STG	MANUAL STOP GATE
HOA	HAND–OFF–AUTO	SUG	SLUICE GATE
HOR	HAND–OFF–REMOTE	SV	SOLENOID VALVE
JB	JUNCTION BOX	TC	TABLET CHLORINATOR
KGV	KNIFE GATE VALVE	TDS	TOTAL DISSOLVED SOLIDS
LAN	LOCAL AREA NETWORK	TE	TEMPERATURE SENSOR
LCP	LOCAL CONTROL PANEL	TG	TEMPERATURE GAUGE
LE	LEVEL SENSOR	TI	TEMPERATURE INDICATOR
LIT	LEVEL INDICATOR TRANSMITTER	TIT	TEMPERATURE INDICATOR TRANSMITTER
LOS	LOCK–OFF–STOP	TNK	TANK
LR	LOCAL / REMOTE	TS	TEMPERATURE SWITCH
LSH	LEVEL SWITCH HIGH	TSH	TEMPERATURE SWITCH HIGH
LSHH	LEVEL SWITCH HIGH HIGH	TT	TEMPERATURE TRANSMITTER
LSL	LEVEL SWITCH LOW	TV	TELESCOPING VALVE
LSLL	LEVEL SWITCH LOW LOW	UPS	UNINTERRUPTIBLE POWER SUPPLY
LSM	LEVEL SWITCH MEDIUM	UVU	ULTRAVIOLET UNIT
LT	LEVEL TRANSMITTER	V	MANUAL VALVE
MCAS	MINI CONTROL AND STATUS	VFD	VARIABLE FREQUENCY DRIVE
MCC	MOTOR CONTROL CENTER	WE	WEIR
ME	MOISTURE SENSOR	WEG	WEIR GATE
MGD	MILLION GALLONS PER DAY	WR	ADJUSTABLE WEIR
MGL	MILLIGRAM PER LITER	XV	AUTOMATED OPEN/CLOSE VALVE/GATE
MOT	MOTOR	ZS	SWITCH POSITION
MS	MOTOR STARTER		
MTU	MASTER TELEMETRY UNIT		
MXR	MIXER		
NaHSO3	SODIUM BISULFITE		
NaOCL	SODIUM HYPOCHLORITE		

NO	BY	DATE	REVISIONS	DATE	APP.

THESE DRAWINGS ARE THE PROPERTY OF P.A.C.E. AND SHALL NOT BE REPRODUCED IN ANY MANNER NOR BE USED FOR CONSTRUCTION UNLESS STAMPED "ISSUED FOR CONSTRUCTION".

Registered Professional Engineer (Civil) — CERTIFICATE NO. 70097 — Signed — ARIZONA, U.S.A. — Expires 12/31/28

PREPARED BY: PACE
DESIGNED BY: NE
DRAWN BY: DS, WW
CHECKED BY: TP
SCALE: AS NOTED
DATE: NOV 2025
JOB NO.: B614

TITLE: **P&ID GENERAL NOTES**

JOB: TOWN OF JEROME WASTEWATER TREATMENT PLANT — YAVAPAI CO. AZ

100% ISSUED FOR BID

PREPARED BY: TAYLOR B. PIERCE — R.C.E 70097 — DATE

PACE
Advanced Water Engineering
8723 E. Via de Ventura, Suite 270, SCOTTSDALE, CA 85258
P: (480) 991-3995 | www.pacewater.com

SHEET I0.0
93 OF 99 SHEETS

JOB NO. B614

W:\B614\Engineering\B614-30\sheets\B614-I0.1 GENERAL.dwg - Tab: B614-I0.1 GENERAL - by nsddingson on 10/17/25 at 9:55:33 AM

AUTO-DIALER

PRIORITY NO. ALARM NOTIFICATION

SCREEN 1

FAIL ALARM YA 03010

FAIL Y1 03010

HMI

FAIL Y1 03010

SBR CONTROL PANEL (VENDOR)

(480 VAC) CB

MCC

MS 03010 POT/HIM
HS 03010A HOA
MS 03010B POT/HIM
HS 03010B HOA
MS 03010C POT/HIM
HS 03010C HOA
G RUNNING
Y FAULT
ETM
HEADWORKS CONTROL PANEL

M-03010A
EST 03010A
LE-03031
LE-03032
M-03010B
EST 03010B
LE-03033
LE-03034

— SEWER MAIN FROM COLLECTION SYSTEM — 12"-SWR-101

ROCK TRAP

8"-SWR-102

PV-03021
PV-03022

CLIMBER BAR SCREENS

10"-INFLT-103 — A SCREENED INFLUENT TO SBR REF SHT I1.1

ZSO 03023
ZSC 03023
HS 03023
SV 03023

— POTABLE WATER FROM TOWN — 2"-WTR-701

S V-02020

A DRYING BED LIFT STATION RETURN REF SHT I1.4 — 3"-DR RET-001

CV-07020

BV-07021

EST 03010C
M-03010C

1"-DR-005

DISPOSAL

HEADWORKS

NO	BY	DATE	REVISIONS	DATE	APP.

Registered Professional Engineer (Civil) CERTIFICATE NO. 70097 Signed Expires 12/31/28 ARIZONA, U.S.A.

THESE DRAWINGS ARE THE PROPERTY OF P.A.C.E. AND SHALL NOT BE REPRODUCED IN any MANNER NOR BE USED FOR CONSTRUCTION UNLESS STAMPED "ISSUED FOR CONSTRUCTION".

PREPARED BY: PACE
DESIGNED BY: NE
DRAWN BY: DS, WW
CHECKED BY: TP
SCALE: AS NOTED
DATE: NOV 2025
JOB NO: B614

TITLE: HEADWORKS

JOB: TOWN OF JEROME WASTEWATER TREATMENT PLANT — YAVAPAI CO. AZ

100% ISSUED FOR BID

PREPARED BY: TAYLOR B. PIERCE R.C.E 70097 DATE

PACE
Advanced Water Engineering
8723 E. Via de Ventura, Suite 130 SCOTTSDALE, CA 85258
P: (480) 991-3995 | www.paceaz.com

SHEET I1.0
94 OF 99 SHEETS

JOB NO. B614

W:\B614\Engineering\B614-30sheets\B614-I1.1.dwg - Tab: I1.0 - by naddington on 11/17/25 at 9:55:57 AM

AUTO-DIALER

PRIORITY NO. ALARM NOTIFICATION

SBR INFLUENT VALVE (1) | SBR #1 MIXER (2) | SBR #1 LEVEL (1)(1)(1)(1) | SBR #1 DO (2)(2) | WAS PUMP #1 (1) | DECANTER (1) | DECANT VALVE (1)

HMI

SBR CONTROL PANEL (VENDOR)

MCC

(120 VAC) CB (120 VAC) CB — CB

(480 VAC) CB

RTM 05110 | MS 05110 | HS 05110 HOA | TS 05110 TEMP | MA 05110 LEAK

MA 05100 LEAK | TS 05100 TEMP | MS 05100 | HS 05100 HOA

B — PROCESS AIR FROM BLOWER BUILDING — 4"-PA-402 — REF SHT I1.3

A — PROCESS AIR FROM BLOWER BUILDING — 4"-PA-401 — REF SHT I1.3

A — SCREENED INFLUENT FROM HEADWORKS — 10"-INFLT-103 — REF SHT I1.0

C — SUPERNATANT FROM AEROBIC DIGESTER — 6"-SNT-003 — REF SHT I1.2

SBR INFLUENT VALVE 1 — HS 05120 | ZSO 05120 | ZSC 05120 | PV 05120 — PV-05120 — 4"x3" BFV-04326A — 4"x3" BFV-04326B

SBR INFLUENT VALVE 2 — HS 05122 | ZSO 05122 | ZSC 05122 | PV 05122 — PV-05122 — 4"x3" BFV-04327A — 4"x3" BFV-04327B

SBR MIXER 1 MXR-05110 — ME 05110 LEAK | TE 05110 TEMP

SBR MIXER 2 MXR-05112 — ME 05112 LEAK | TE 05112 TEMP

SBR DECANTER 1 M-05111 — LE 05130 | LSH 05131A | LSL 05131B | AT 05160A | AE 05160B DO | ME 05100 LEAK | TE 05100 TEMP

SBR DECANTER 2 M-05113 — LE 05132 | LSH 05133A | LSL 05133B | AT 05161A | AE 05161B DO | ME 05101 LEAK | TE 05101 TEMP

BFV-05121 — ZSO 05121 | ZSC 05121 | BFV 05121 | HS 05121

BFV-05123 — ZSO 05123 | ZSC 05123 | BFV 05123 | HS 05123

3"-PA-404 | 3"-PA-405 | 3"-PA-406 | 3"-PA-407

FBD-04180 — SBR 1 — WAS PUMP 1 PMP-05100 — V-08120 — PV-08122

FBD-04181 — SBR 2 — WAS PUMP 2 PMP-05101 — V-08121 — PV-08123

SAME AS SBR #1

2"-WAS-901 — A — WASTE SLUDGE TO AEROBIC DIGESTER — REF SHT I1.2

6"-EFFLT-104 — B — EFFLUENT TO SURGE BASIN — REF SHT I1.2

6"-OF-002 — C — OVERFLOW TO DRYING BED LIFT STATION — REF SHT I1.4

6"-WAS-902 — D — WASTE SLUDGE TO DEWATERING — REF SHT I1.4

SEQUENCING BATCH REACTOR

NO	BY	DATE	REVISIONS	DATE	APP.

THESE DRAWINGS ARE THE PROPERTY OF P.A.C.E. AND SHALL NOT BE REPRODUCED IN ANY MANNER NOR BE USED FOR CONSTRUCTION UNLESS STAMPED 'ISSUED FOR CONSTRUCTION'.

Registered Professional Engineer (Civil) — CERTIFICATE NO. — Timothy B. Pace — Signed — ARIZONA, U.S.A. — Expires 12/31/28

PREPARED BY:	PACE
DESIGNED BY:	NE
DRAWN BY:	DS, WW
CHECKED BY:	TP
SCALE:	AS NOTED
DATE	NOV 2025
JOB NO.	B614

TITLE: SEQUENCING BATCH REACTOR

JOB: TOWN OF JEROME WASTEWATER TREATMENT PLANT — YAVAPAI CO. AZ

100% ISSUED FOR BID

PREPARED BY: TAYLOR B. PIERCE — R.C.E. 70097 — DATE

PACE — Advanced Water Engineering — 8723 E. VIA DE COMMERCIO, BLDG. A, SCOTTSDALE, CA 85258 — P: (480) 991-3595 | www.pacewater.com

SHEET I1.1

95 OF 99 SHEETS

JOB NO. B614

W:\B614\Engineering\B614-30sheet\B614I1.1.dwg - Tab: I1.1 - by neddington on 11/17/25 at 8:55:57 AM

AUTO-DIALER

PRIORITY NO. ALARM NOTIFICATION

SURGE BASIN LEVEL

EFFLUENT FLOW METER

EFFLUENT DISCHARGE VALVE

DIGESTER LEVEL SWITCHES

HMI

SBR CONTROL PANEL (VENDOR)

MCC

(120 VAC) CB

(480 VAC) CB

C PROCESS AIR FROM BLOWER BUILDING REF SHT I1.3 — 2"-PA-403

A WASTE SLUDGE FROM SBR REF SHT I1.1 — 2"-WAS-901

B EFFLUENT FROM SBR REF SHT I1.1 — 6"-EFFLT-104

6"-EFFLT-105

PV-06220

FM-06240

BFV-06221

TAB-06290

CHLORINATION TABLET FEEDER

SURGE BASIN

CHLORINE CONTACT BASIN

V-06222 (WEIR SLIDE GATE)

DECHLORINATION TABLET FEEDER

TAB-06291

6"-EFFLT-106 — TREATED EFFLUENT TO BITTER CREEK

AEROBIC DIGESTER

CBD-04280

V-08220

PV-08221

V-05220

6"-SNT-003 — C SUPERNATANT TO SBR 1 REF SHT I1.1

6"-SD-801 — A DIGESTED SLUDGE TO DEWATERING REF SHT I1.4

CHLORINE CONTACT AND DIGESTER

100% ISSUED FOR BID

PREPARED BY: TAYLOR B. PIERCE

PACE Advanced Water Engineering
8723 E. Vía de Ventura, Suite A-110, SCOTTSDALE, CA 85258
P: (408) 991-3595 | www.pacewater.com

R.C.E 70097 DATE

TITLE: CHLORINE CONTACT & DIGESTER

JOB: TOWN OF JEROME WASTEWATER TREATMENT PLANT — YAVAPAI CO. AZ

SHEET I1.2

96 OF 99 SHEETS

JOB NO. B614

NO	BY	DATE	REVISIONS	DATE	APP.

Registered Professional Engineer (Civil) CERTIFICATE NO. 70097 Timothy B. Pierce Signed ARIZONA, U.S.A. Expires 12/31/28

PREPARED BY: PACE
DESIGNED BY: NE
DRAWN BY: DS, WW
CHECKED BY: TP
SCALE: AS NOTED
DATE: NOV 2025
JOB NO.: B614

THESE DRAWINGS ARE THE PROPERTY OF P.A.C.E. AND SHALL NOT BE REPRODUCED IN ANY MANNER NOR BE USED FOR CONSTRUCTION UNLESS STAMPED 'ISSUED FOR CONSTRUCTION'.

W:\B614\Engineering\B614-50\sheets\B614-I1.1.dwg - Tab: I1.2 - by reddington on 11/17/25 at 9:55:57 AM

AUTO-DIALER

PRIORITY NO. ALARM NOTIFICATION

AERATION BLOWER #1 | AERATION BLOWER #2 | AERATION BLOWER #3 | DIGESTER BLOWER #1 | SBR #1 AIR VALVE | SBR #2 AIR VALVE

HMI

SBR CONTROL PANEL (VENDOR)

MCC

NOTE:
CONTRACTOR TO REVIEW SHOP DRAWINGS FROM EQUIPMENT MANUFACTURER FOR SIZE, NUMBER AND SCOPE OF SUPPLY OF VALVES AND INSTRUMENTS.

BLR-04310 BLOWER 1 | BLR-04311 BLOWER 2 | BLR-04312 BLOWER 3 | BLR-04313 BLOWER 4

AMBIENT AIR | ENCLOSURE AIR FILTER | BLOW OFF VALVE

CV-04320A | CV-04321A | CV-04322A | CV-04323A

BFV-04320B | BFV-04321B | BFV-04322B | BFV-04523B

BFV-04524

BFV-04325A | BFV-04325B

4"-PA-401 → A PROCESS AIR TO SBR 1 REF SHT I1.1

4"-PA-402 → B PROCESS AIR TO SBR 2 REF SHT I1.1

2"-PA-403 → C PROCESS AIR TO AEROBIC DIGESTER REF SHT I1.2

BLOWER ROOM

100% ISSUED FOR BID

PREPARED BY: TAYLOR B. PIERCE

PACE
Advanced Water Engineering
8723 E. Via de Commercio, Suite 204 | Scottsdale, AZ 85258
P: (480) 991-3995 | www.pacewater.com

R.C.E 70097 DATE

TITLE: BLOWER ROOM

JOB: TOWN OF JEROME WASTEWATER TREATMENT PLANT — YAVAPAI CO. AZ

SHEET I1.3

97 OF 99 SHEETS

JOB NO. B614

NO	BY	DATE	REVISIONS	DATE	APP.

Registered Professional Engineer (Civil) — CERTIFICATE NO. 70097 — Timothy B. Pierce — Date Signed — ARIZONA U.S.A. — Expires 12/31/28

PREPARED BY: PACE
DESIGNED BY: NE
DRAWN BY: DS, WW
CHECKED BY: TP
SCALE: AS NOTED
DATE: NOV 2025
JOB NO.: B614

THESE DRAWINGS ARE THE PROPERTY OF P.A.C.E. AND SHALL NOT BE REPRODUCED IN ANY MANNER NOR BE USED FOR CONSTRUCTION UNLESS STAMPED 'ISSUED FOR CONSTRUCTION'.

W:\B614\Engineering\B614-30\sheets\B614-I1.1.dwg - Tab: I1.3 - by reddington on 11/17/25 at 9:35:57 AM

AUTO-DIALER

PRIORITY NO. ALARM
NOTIFICATION

DEWATERING FEED PUMP

SLUDGE FEED VALVE

DRYING BED LIFT STATION PUMPS

FAIL ALARM YA 08400

RUNNING Y1 08400

RUN YC 08400

FAIL ALARM YA 08420B

OPEN Y1 08420B

CLOSE YC 08420B

FAIL ALARM YA 07400A

FAIL ALARM YA 07400B

RUNNING Y1 07400

RUNNING Y1 07400A

RUNNING Y1 07400B

HMI

SBR CONTROL PANEL (VENDOR)

DI

DO

(120 VAC)

CB

(480VAC)

MCC

MS 08400 HS 08400 HOA G RUNNING ETM Y FAULT

SLUDGE BAGGING SYSTEM CONTROL PANEL

MS 07400A HS 07400A HOA MS 07400B HS 07400B HOA

DRYING BED LIFT STATION CONTROL PANEL

HS 07401 HO

OVERFLOW LIFT STATION CONTROL PANEL

C OVERFLOW FROM SBR REF SHT I1.1

8"-OF-002

A DIGESTED SLUDGE FROM DIGESTER REF SHT I1.2

6"-SD-801

D WASTE SLUDGE FROM SBR 1 & 2 REF SHT I1.1

6"-WAS-902

— POTABLE WATER FROM TOWN

2"-PW-702

V-02420

PV-08421

6"x4"

PV-08420A

4"-WAS-903

PV-08420B

ZSO 08420B

ZSC 08420B

XV 08420B

PV-08422A

PV-08422B

SLUDGE DRYING BEDS

DISPOSAL

4"-FLTRT-302

SLUDGE BAGGING UNIT BAG-08490

4"-FLTRT-301

PMP-08400

MXR-08410

DRY POLYMER MIXING UNIT

PMP-08401

1"-CDS-501

BV-08423

BV-08424

CV-08425

ARV-07422

3"-DR RET-001

A OVERFLOW RETURN TO HEADWORKS REF SHT I1.0

LSHH 07430A LSH 07430B LSL 07430C

CV-07420A

CV-07421A

CV-07420B

CV-07421B

PMP-07400A PMP-07400B

DRYING BED LIFT STATION

4"-OF-003

EMERGENCY OVERFLOW BASIN

ARV-07425

2"-OF RET-004

LSHH 07431A LSL 07431B

CV-07423

BV-07424

4"-OF-004

PMP-07401

OVERFLOW LIFT STATION

DEWATERING AND LIFT STATIONS

100% ISSUED FOR BID

PREPARED BY: TAYLOR B. PIERCE R.C.E 70097 DATE

PACE
Advanced Water Engineering
8723 E. Via de Commercio, Suite A | Scottsdale, CA 85258
P: (480) 991-3595 | www.pacewater.com

NO	BY	DATE	REVISIONS	DATE	APP.

Registered Professional Engineer (Civil) CERTIFICATE NO. 70097 Timothy B. Pierce Signed ARIZONA, U.S.A. Expires 12/31/28

PREPARED BY:	PACE
DESIGNED BY:	NE
DRAWN BY:	DS, WW
CHECKED BY:	TP
SCALE:	AS NOTED
DATE	NOV 2025
JOB NO.	B614

TITLE: DEWATERING & LIFT STATIONS

JOB: TOWN OF JEROME WASTEWATER TREATMENT PLANT AZ

YAVAPAI CO.

SHEET I1.4

98 OF 99 SHEETS

JOB NO. B614

THESE DRAWINGS ARE THE PROPERTY OF P.A.C.E. AND SHALL NOT BE REPRODUCED IN ANY MANNER NOR BE USED FOR CONSTRUCTION UNLESS STAMPED 'ISSUED FOR CONSTRUCTION'.

V:\B614\Engineering\B614-30\sheets\B614-I1.1.dwg - Tab: I1.4 - by raddington on 11/17/25 at 9:55:57 AM

AUTO-DIALER

PRIORITY NO. ALARM NOTIFICATION

ATS

GENERATOR

FAULT ALARM YA 01003

LOW ALARM YA 01003

UTILITY SWITCH POSITION YI 01001

FAULT YI 01003

OFF / RUNNING YI 01003

LOW FUEL LEVEL YI 01003

HMI

SBR CONTROL PANEL (VENDOR)

DI

RUN R

FAIL A

I

MCC

(480 VAC) CB

LOCATED ON GENERATOR

ANNUNCIATOR

SWITCH POSITION

DI 01002

DO 01002

GEN RUN

EST 01000

ON-BOARD POWER ZONE

POWER FROM APS

TRANSFORMER (BY UTILITY)

POWER TO

SES

ATS

CALL

GENERATOR

SES, ATS, AND STAND-BY GENERATOR

NO	BY	DATE	REVISIONS	DATE	APP.

Registered Professional Engineer (Civil) CERTIFICATE NO. 70097 TAYLOR B. PIERCE Signed STATE OF ARIZONA, U.S.A. Expires 12/31/28

PREPARED BY: PACE
DESIGNED BY: NE
DRAWN BY: DS, WW
CHECKED BY: TP
SCALE: AS NOTED
DATE: NOV 2025
JOB NO.: B614

THESE DRAWINGS ARE THE PROPERTY OF P.A.C.E. AND SHALL NOT BE REPRODUCED IN ANY MANNER NOR BE USED FOR CONSTRUCTION UNLESS STAMPED 'ISSUED FOR CONSTRUCTION'.

TITLE: GENERATOR

JOB: TOWN OF JEROME WASTEWATER TREATMENT PLANT — YAVAPAI CO. AZ

100% ISSUED FOR BID

PREPARED BY: TAYLOR B. PIERCE R.C.E. 70097 DATE

PACE
Advanced Water Engineering
8723 E. VIA DE VENTURA, SUITE A, SCOTTSDALE, CA 85258
P: (480) 991-3595 | www.pacewater.com

SHEET I1.5
99 OF 99 SHEETS

JOB NO. B614

W:\B614\Engineering\B614-30sheets\B614I1.1.dwg - Tab: I1.5 - by neddington on 11/17/25 at 8:55:57 AM

PACE
Advanced Water Engineering

Jerome Wastewater Treatment Plant Improvements

ADDENDUM #1

Date: May 7, 2026

Quest CDN #9117808

This addendum is to formally issue responses to bidder questions and minor modifications. Reminder: Acknowledge receipt of this addendum on the Bid Form.

Attachments:

1. Attachment 1 – Geotechnical Evaluation
2. Attachment 2 – C-410 Bid Form

Notice:

1. The non-mandatory pre-bid conference will be held on **Thursday May 14th** at **2:00 PM** at the Council Chambers, Town of Jerome, 600 Clark Street, Jerome AZ, 86331.

   The pre-bid conference will also be made available for **virtual attendees at the link below:**

   https://teams.microsoft.com/meet/21531934771837?p=2ZyfMU58TuhQfICc40

   Meeting ID: 215 319 347 718 37
   Passcode: DE22xX6D

Clarifications

1. It was brought to our attention that the project completion dates were not included in the bid manual. Form C-520 – Agreement Between Owner and Contractor, Section 4.03(A) shall be modified to reflect the project times as follows:

   "The Work will be substantially complete within **300** days after the date when the Contract Times commence to run as provided in Paragraph 4.01 of the General Conditions, and completed and ready for final payment in accordance with Paragraph 15.06 of the General Conditions within **330** days after the date when the Contract Times commence to run."

2. The bid form (form C-410 – Bid Form) has been updated and is **attached.**

Questions

1. We'd like to receive a copy of the geotechnical report for the Jerome WWTP.

   Response: Please find a copy of the geotechnical report attached to this addendum. The geotechnical report is also appended to the Technical Specifications included in the bid manual.

Western Technologies Inc.

GEOTECHNICAL EVALUATION REPORT

JEROME WWTP UPGRADES
Jerome, Arizona
WT Reference No. 2522JW197

PREPARED FOR:
Pace Advanced Water Engineering
P.O. Box 4805
Scottsdale, Arizona 85261
Attn: Ms. Andrea Jaycox, Senior Project Coordinator

October 25, 2022

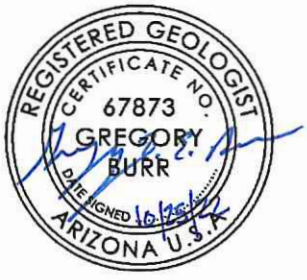

Gregory L. E. Burr, R.G., E.I.T.
Director of Geotechnical Services



Craig P. Wiedeman, P.E.
Senior Geotechnical Engineer

Western Technologies Inc.
The Quality People
Since 1955

2400 East Huntington Drive
Flagstaff, Arizona 86004-8934
(928) 774-8700 • fax 774-6469

October 25, 2022

Pace Advanced Water Engineering
P.O. Box 4805
Scottsdale, Arizona 85261

Attn: Ms. Andrea Jaycox, Senior Project Coordinator

Re: Geotechnical Evaluation
Jerome WWTP Upgrades
Jerome, Arizona

Job No. 2522JW197

Western Technologies Inc. has completed the geotechnical evaluation for the waste water treatment plant upgrades and new wastewater pipeline to be located in Jerome, Arizona. This study was performed in general accordance with our proposal number 2522PW253 dated June 15, 2022. The results of our study, including the boring/test pit location diagrams, laboratory test results, boring/test pit logs, and the geotechnical recommendations are attached.

We have appreciated being of service to you in the geotechnical engineering phase of this project and are prepared to assist you during the construction phases as well. If design conditions change, or if you have any questions concerning this report or any of our testing, inspection, design and consulting services, please do not hesitate to contact us. We look forward to working with you on future projects.

Sincerely,
WESTERN TECHNOLOGIES, INC.
Geotechnical Engineering Services

Gregory L. E. Burr, R.G., E.I.T.
Director of Geotechnical Services

Copies to: Addressee (emailed)

TABLE OF CONTENTS

1.0 PURPOSE 1

2.0 PROJECT DESCRIPTION 1

3.0 SCOPE OF SERVICES 2
3.1 Field Exploration 2
3.2 Laboratory Analyses 2
3.3 Analyses and Report 3

4.0 SITE CONDITIONS 3
4.1 Surface 3
4.2 Subsurface 4

5.0 GEOTECHNICAL PROPERTIES 4

6.0 RECOMMENDATIONS 4
6.1 General 4
6.2 Design Considerations 5
6.3 Tank Foundations 5
6.4 Manhole Foundations 6
6.5 Lateral Design Criteria for Thrust Blocks 6
6.6 Conventional Spread Footings 6
6.7 Lateral Design Criteria 7
6.8 Seismic Considerations 8
6.9 Slab-on-Grade Support 9
6.10 Drainage 10
6.11 Aggregate-Surfaced Roadways 10
6.12 Corrosivity 10

7.0 EARTHWORK 11
7.1 General 11
7.2 Site Clearing 11
7.3 Excavation 11
7.4 Tank Pad Preparation 12
7.5 Spread Footing Foundation Preparation 12
7.6 Slab-on-Grade Preparation 12
7.7 Exterior Slab Preparation 13
7.8 Materials 14
7.9 Placement and Compaction 15
7.10 Compliance 16

8.0 ADDITIONAL SERVICES 16

9.0 LIMITATIONS 17

10.0 CLOSURE 17

TABLE OF CONTENTS (Continued)

TEST PIT/BORING LOCATION DIAGRAMS..... Plates 1 and 2

APPENDIX A
Definition of Terminology..... A-1
Method of Soil Classification..... A-2
Test Pit/Boring Log Notes..... A-3
Test Pit/Boring Logs.....A-4 to A-16

APPENDIX B
Laboratory Tests.....B-1 to B-5

GEOTECHNICAL EVALUATION
JEROME WWTP UPGRADES
JEROME, ARIZONA
JOB NO. 2522JW197

1.0 PURPOSE

This report contains the results of our geotechnical evaluation for the proposed WWTP upgrades and new wastewater pipeline to be located at the existing wastewater treatment plant in Jerome, Arizona. The purpose of these services is to provide information and recommendations regarding:

- foundation design parameters
- slab-on-grade
- lateral earth pressures
- excavation conditions
- earthwork, including backfill placement, and suitability of existing soils for backfill materials
- drainage
- corrosivity
- on-site aggregate surfacing

Results of the field exploration, field tests, and laboratory testing program are presented in the Appendices.

2.0 PROJECT DESCRIPTION

Based on the revised information provided by Ms. Andrea Jaycox, Senior Project Coordinator, the proposed project will consist of approximately 2,400 linear feet of wastewater line, a new SBR Package Plant, and new primary settling and headworks tanks. The structures will be concrete and/or masonry construction with slab-on-grade floors. Maximum wall and column loads for the structures are assumed to be 3 kips per linear foot and 45 kips, respectively. The wastewater line invert elevations will be a maximum of 10 feet below the lowest existing site grades. We anticipate no extraordinary slab-on-grade criteria and that the finished structure bottom levels will be within about 2 to 3 feet of the existing site grades. In addition, approximately 2,000 linear feet of the existing access road will be resurfaced, widened, and additional pull-outs will be constructed. Should any of our information or assumptions not be correct, we request that the Client notify WT immediately.

3.0 SCOPE OF SERVICES

3.1 Field Exploration

Seven test pits and six borings were excavated/hand-auger drilled to depths of about 1 to 8 feet below the existing site grades at the approximate locations shown on the attached test pit/boring location diagrams. In addition, two samples of on-site rock were obtained for unit weight and unconfined compressive strength testing.

Logs of the test pits/borings are presented in Appendix A. Subsoils encountered during excavating/drilling were examined visually and sampled at selected depth intervals. A field log was prepared for each test pit/boring. These logs contain visual classifications of the materials encountered during excavation/drilling as well as interpolation of the subsurface conditions between samples. Final logs, included in Appendix A, represent our interpretation of the field logs and include modifications based on laboratory observations and tests of the field samples.

The final logs describe the materials encountered, their thicknesses, and the locations where samples were obtained. The Unified Soil Classification System was used to classify soils. The soil classification symbols appear on the test pit/boring logs and are briefly described in Appendix A. Local and regional geologic characteristics were used to estimate the seismic design criteria.

3.2 Laboratory Analyses

Laboratory analyses were performed on representative samples to aid in material classification and to estimate pertinent engineering properties of the on-site materials for preparation of this report. Testing was performed in general accordance with applicable ASTM and Arizona methods. The following tests were performed and the results are presented in Appendix B.

- Water content
- Dry density
- Remolded expansion potential
- Maximum density/optimum moisture
- Gradation
- Plasticity
- Soluble salts/sulfates/chlorides

- Corrosivity (ASTM A674)
- Unconfined compressive strength (rock)
- Unit weight (rock)

Test results were utilized in the development of the recommendations contained in this report.

3.3 Analyses and Report

This geotechnical engineering report includes a description of the project, a discussion of the field and laboratory testing programs, a discussion of the subsurface conditions, and design recommendations as appropriate to the purpose. The scope of services for this project does not include, either specifically or by implication, any environmental assessment of the site, discovery of underground storage tanks or other underground structures, or identification of contaminated or hazardous materials or conditions. If there is concern about the potential for such contamination, other studies should be undertaken. We are available to discuss the scope of such studies with you.

4.0 SITE CONDITIONS

4.1 Surface

At the time of our field exploration, the site was a developed wastewater treatment plant. The exteriors of existing structures appeared to be in good to fair condition. The site is bordered on the east by the existing aggregate surfaced access road to the plant, and on all other sides by northeast-southwest oriented Bitter Creek that is about 50 to 100 feet wide and 20 to 30 feet deep that directs flow to the northeast. The ground surface was relatively flat in the developed portions of the site, steep to very steep surrounding the developed areas, and contained a sparse to moderate growth of native juniper trees, bushes, cacti, grasses and weeds. Surface drainage appeared to be fair to poor with some evidence of previous surface water ponding in the developed portions of the site, and good in the undeveloped portions of the site by means of surface sheet flow to the west and north down the existing slopes into Bitter Creek.

4.2 Subsurface

As presented on the test pit/boring logs, surface and subsoils extending to the full depth of exploration at all locations explored consisted of medium to near-high plasticity Clayey SANDS with variable amounts of gravel, Clayey GRAVELS with variable amounts of sand and non-plastic Silty GRAVELS with variable amounts of sand. All soils encountered contained random amounts of limestone cobbles and boulders. Refusal to excavator/auger penetration occurred in all test pits/borings at depths of about 1 to 8 feet on LIMESTONE or limestone cobbles and boulders. Groundwater was not encountered in any test pit/boring at the time of exploration. The logs in Appendix A show details of the subsurface conditions encountered during the field exploration.

The test pit/boring logs included in this report are indicators of subsurface conditions only at the specific location and date noted. Variations from the field conditions represented by the test pits/borings may become evident during construction. If variations appear, we should be contacted to re-evaluate our recommendations.

5.0 GEOTECHNICAL PROPERTIES

Near-surface soils range from non-plastic to near-high plasticity. The site soils exhibit moderate expansion potential when recompacted, confined by loads approximating floor loads and saturated in accordance with standard Arizona test methods. Slabs-on-grade supported on recompacted native soils have a moderate potential for heaving if the water content of the soil increases. The site soils were too granular to obtain samples suitable for compression testing. Two samples of the on-site rock were obtained for unit weight and unconfined compressive strength testing and the results are present in Appendix B.

6.0 RECOMMENDATIONS

6.1 General

Recommendations contained in this report are based on our understanding of the project criteria described in Section 2.0, **PROJECT DESCRIPTION**, and the assumption that the soil and subsurface conditions are those disclosed by the test pits/borings. Others may change the plans, final elevations, number and type of structures, foundation loads, and tank bottom levels during design or construction. Substantially different subsurface conditions

from those described herein may be encountered or become known. Any changes in the project criteria or subsurface conditions shall be brought to our attention in writing.

6.2 Design Considerations

Existing fill was not encountered in the test pits/borings, but was observed on the site. We understand that no documentation is available regarding any field density testing that may have been performed during fill construction. Based on this lack of documentation and the overall condition of the fill observed, we consider the fill to be uncontrolled and recommend removal of existing fill in all structural areas.

Several of the test pits/borings indicate the presence of medium to near-high plasticity clayey soils on the site. These soils will expand or swell with an increase in moisture content. The structures and related improvements situated on expansive soils will be subject to movements if the foundation soils experience an increase in moisture content. It should be understood that if moisture penetrates expansive soils, there will likely be heave and possible resultant cracking/distress of the proposed structures and related improvements. It should be noted that shallow foundation systems are not designed to resist soil movements resulting from sewer or plumbing leaks, excessive or leaking irrigation systems, poor drainage, or water ponding near the structures. Construction of site fences, screen walls and other miscellaneous improvements such as exterior slabs-on-grade that typically fall under building code guidelines will be susceptible to heave as well.

Cobbles and boulders were encountered in the test pits/borings. These oversized materials, greater than 3 inches, could present construction difficulties for foundation, utility trenches and other excavations. In cut areas and excavations, exposed oversized materials should be removed.

6.3 Tank Foundations

Above-ground tanks may be supported on compacted aggregate underlain by a minimum thickness of 1 foot of site soils removed and replaced with properly compacted, imported engineered fill material. Below-ground tanks may be supported on scarified and recompacted native soils. Any existing fill should be removed in all proposed tank areas. The tank pads, prepared as recommended in the **EARTHWORK** section of the report, will be suitable to support a maximum dead plus live-load pressure of up to 3000 pounds per square foot. We anticipate that total and differential movements of the proposed above-ground tank structures, supported as recommended, should be within tolerable limits of

the tank manufacturer, typically uniform settlement of less than 2 inches and differential settlement less than 0.5-inch per 32 feet of circumference. Total and differential movements of the proposed below-ground tank structures, supported as recommended, are anticipated to be 1 inch and 3/4 inch, respectively. Additional foundation movements could occur if water from any source infiltrates the foundation soils. Therefore, proper drainage should be provided in the final design and during construction.

We recommend that the geotechnical engineer or his representative observe the tank pad preparation. It should be determined whether the materials exposed are similar to those anticipated for support of the tanks. Any soft, loose or unacceptable materials should be undercut to suitable materials and backfilled with engineered fill material.

6.4 Manhole Foundations

The soils encountered along the alignment are expected to have moderate to high bearing capacity at anticipated manhole foundation depths. Other than removal of any soft, loose, unstable or disturbed materials from beneath manhole foundations, specialized treatment of soils beneath manholes is not anticipated.

6.5 Lateral Design Criteria for Thrust Blocks

For any thrust block design, lateral loads may be resisted using a soil bearing pressure of 2500 pounds per square foot (psf). All fill against or around thrust blocks should be compacted to densities specified herein under **Placement and Compaction**.

6.6 Conventional Spread Footings

If conventional spread footings are used, they should be underlain by a minimum thickness of 1 foot of lean mix (2-sack) concrete backfill. Footings should bear at least 2 feet below the lowest adjacent finished grade. Footings may be designed to impose a maximum dead plus live-load pressure of up to 2500 pounds per square foot.

We anticipate that total movement of the proposed structures, supported as recommended, should be less than 1 inch. Differential movement should be less than ¾ inch. Additional foundation movements could occur if water from any source infiltrates the foundation soils. Therefore, proper drainage should be provided in the final design and during construction.

Finished grade is the lowest adjacent grade for perimeter footings and floor level for interior footings. The design bearing capacity applies to dead loads plus design live load conditions. Recommended minimum widths of column and wall footings are 24 inches and 16 inches, respectively. The bearing value given is a net bearing value and the weight of the concrete in the footings may be ignored.

All footings, stem walls and masonry walls should be reinforced to reduce the potential for distress caused by differential foundation movements. The use of joints at openings or other discontinuities in masonry walls is recommended.

We recommend that the geotechnical engineer or his representative observe the footing excavations before reinforcing steel and concrete are placed. It should be determined whether the soils exposed are similar to those anticipated for support of the footings. Any soft, loose or unacceptable soils should be undercut to suitable materials and backfilled with either lean mix or structural concrete.

6.7 Lateral Design Criteria

For retaining walls located above any free water surface with no surcharge loads, recommended equivalent fluid pressures and coefficients of base friction for unrestrained elements are:

- Active:
  Undisturbed subsoil .....38 psf/ft
  Compacted granular backfill .....30 psf/ft
  Compacted on-site soils (low expansive potential) .....38 psf/ft
  Clayey site soils ..... not recommended for use

- Passive:
  Shallow wall footings .....220 psf/ft
  Shallow column footings.....350 psf/ft
  Dense rock .....500 psf/ft

- Coefficient of base friction
  Soil.....0.35*
  Rock.....0.55

* The coefficient of base friction (soil) should be reduced to 0.25 when used in conjunction with passive pressure.

Where the design includes restrained elements, the following equivalent fluid pressures are recommended:

- At-rest:
  Undisturbed subsoil .....64 psf/ft
  Compacted granular backfill .....55 psf/ft

These lateral earth pressures are not applicable for submerged soils. We should be consulted for additional recommendations if such conditions are to be included in the design. Any surcharge from adjacent loadings must also be considered. Walls below grade should be waterproofed.

We recommend a free-draining soil layer or manufactured geocomposite material, be constructed adjacent to the back of the retaining wall. A filter may be required between the soil backfill and drainage layer. This drainage zone should help prevent hydrostatic pressure buildup. This vertical drain should be tied into a gravity drainage system at the base of the retaining wall. It is important that all backfill be properly placed and compacted. Backfill should be mechanically compacted in layers. Flooding or jetting should not be permitted. Care should be taken not to damage the walls when placing the backfill. Backfills should be inspected and tested during placement.

Fill against footings, stem walls and retaining walls should be compacted to densities specified in **EARTHWORK**. Medium to high plasticity clay soils should not be used as backfill against retaining walls. Compaction of each lift adjacent to walls should be accomplished with hand-operated tampers or other lightweight compactors. Overcompaction may cause excessive lateral earth pressures which could result in wall movements.

6.8 Seismic Considerations

Structures should be designed in accordance with applicable building codes. The seismic design parameters presented in the following table, in accordance with the 2018 International Building Code and ASCE 7-16, are applicable to the project site:

Seismic Design Parameters International Building Code 2018, ASCE 7-16	
Soil Site Class	C
Mapped Spectral Response Acceleration at 0.2 sec period (S_s)	0.31g
Mapped Spectral Response Acceleration at 1.0 sec period (S_1)	0.097g
Site Coefficient for 0.2 sec period (F_a)	1.3
Site Coefficient for 1.0 sec period (F_v)	1.5
Design Spectral Response Acceleration at 0.2 sec period (S_{DS})	0.269g
Design Spectral Response Acceleration at 1.0 sec period (S_{D1})	0.097g

The soil site class is based upon conditions identified in shallow exploratory test pits/borings and local knowledge of the geotechnical conditions in the vicinity of the site. Conditions extending beyond the depth of our test pits/borings to a depth of 100 feet were assumed for the purposes of providing the information presented in the table. Based upon the density of the on-site soils and lack of groundwater, the potential settlement and lateral spread due to liquefaction is not a considered to be a significant concern on the site.

6.9 Slab-on-Grade Support

Slabs-on-grade should be supported on a minimum thickness of 1 foot of properly placed and compacted, imported, low expansive, engineered fill. For design of interior slabs-on-grade, we recommend using a modulus of subgrade reaction (k) of 200 pounds per cubic inch (pci) for the on-site soils and 225 pci for imported fill material, based on a 30-inch diameter plate. The slab subgrade should be prepared by the procedures outlined in this report. A minimum 4-inch thick layer of base course should be provided beneath all slabs to help prevent capillary rise and a damp slab.

All concrete placement and curing operations should follow the American Concrete Institute manual recommendations. Improper curing techniques and/or high slump (water-cement ratio) could cause excessive shrinkage, cracking or curling. The plastic properties of the concrete should be documented at the time of placement and specimens should also be prepared for strength testing to verify compliance with project specifications. Concrete slabs should be allowed to cure adequately before placing vinyl or other moisture sensitive floor covering.

6.10 Drainage

The major cause of soil-related foundation and slab-on-ground problems is moisture increase in soils below structures. Properly functioning conventional foundations and floor slabs-on-ground require appropriately constructed and maintained site drainage conditions. Therefore, it is extremely important that positive drainage be provided during construction and maintained throughout the life of the structures. It is also important that proper planning and control of any landscape and irrigation practices be performed.

Infiltration of water into utility or foundation excavations must be prevented during construction. Backfill against footings, exterior walls, and in utility line trenches should be well compacted and free of all construction debris to minimize the possibility of moisture infiltration. If utility line trenches are backfilled with a granular material, then a clay or concrete plug should be placed in the trench adjacent to the structure to prevent water from following the trench back under the structure.

6.11 Aggregate-Surfaced Roadways

For unpaved sections, we recommend an initial minimum thickness of 6 inches of granular cover material. As with any unbound vehicular section, additional material will be required over time as cover material is lost due to grading, snow plowing, lateral shoving, and intrusion of the cover material into the underlying subgrade soils. To help reduce intrusion, consideration should be given to the use of a geotextile separator fabric placed at the cover material/subgrade soil interface.

6.12 Corrosivity

Based on the laboratory test results, the on-site soils exhibit a low to moderate corrosive potential to ductile iron piping. This information should be used as an aid in choosing the construction materials that will be in contact with these soils and that will need to be resistant to various corrosive forces. Manufacturers' representatives should be contacted regarding the specific corrosivity resistance for their particular product.

The chemical test results indicate that the soils at the site classify as moderately corrosive to concrete, Class S1 in accordance with ACI 318, Table 4.2.1. Concrete should be made with a cement that provides sulfate resistance and that has a maximum water-cementitious materials ratio and minimum compressive strength set forth in the provisions of ACI 318, Section 4.3.

7.0 EARTHWORK

7.1 General

The conclusions contained in this report for the proposed construction are contingent upon compliance with recommendations presented in this section. Any excavating, trenching, or disturbance which occurs after completion of the earthwork must be backfilled, compacted and tested in accordance with the recommendations contained herein. It is not reasonable to rely upon our conclusions and recommendations if any future unobserved and untested trenching, grading or backfilling occurs.

Although underground facilities were not observed, such features might be encountered during construction. These features should be demolished and removed in accordance with the recommendations of the geotechnical engineer. Any loose or disturbed soils resulting from demolition and/or removal of existing facilities should also be removed and/or recompacted as engineered fill, and any excavations should be backfilled in accordance with recommendations presented herein.

7.2 Site Clearing

Strip and remove all existing fill, remaining vegetation, debris, aggregate surfacing and/or concrete pavement and any other deleterious materials from the building, tank and wastewater line area. The building/tank area is defined as that area within the structure footprint plus 5 feet beyond the perimeter of the footprint. All exposed surfaces should be free of mounds and depressions which could prevent uniform compaction.

7.3 Excavation

We anticipate that excavations into the shallow site soils for the proposed construction can be accomplished with conventional equipment. Excavations penetrating the underlying limestone will require the use of heavy-duty, specialized equipment, likely together with large pneumatic hammers, to facilitate rock break-up and removal.

Cut slopes into the shallow on-site soils should be constructed no steeper than 1:1 (horizontal:vertical) and 0.5:1 (horizontal:vertical) in the limestone bedrock. Fill slopes should be constructed no steeper than 1.5:1 (horizontal:vertical) to limit erosion, and to provide slope protection. Natural slopes exceeding a 5:1 (horizontal:vertical) slope

configuration, should be benched prior to fill placement. Natural slopes which will support fill embankments should be benched at a maximum 5:1 slope.

On-site soils will pump or become unworkable at high water contents. Workability may be improved by scarifying and drying. Overexcavation of wet zones and replacement with drier granular materials may be necessary. The use of lightweight excavation and compaction equipment may be required to minimize subgrade pumping.

7.4 Tank Pad Preparation

Following removal of any existing fill material, above-ground tanks should be founded on a minimum thickness of 1 foot of imported, properly compacted, low expansive, engineered fill material. Remove existing soils to a minimum depth of 1 foot below the bottom of the above-ground tank elevation. Following the removal, and immediately below all below-grade tanks, scarify, moisten or dry as required, and compact all subgrade soils to a minimum depth of 8 inches. The subgrade preparation should be accomplished in a manner which will result in uniform water contents and densities after compaction. In areas where dense limestone is encountered, scarification and recompaction is not required.

7.5 Spread Footing Foundation Preparation

Following removal of any existing fill material in footing areas, remove existing soils to a minimum depth of 1 foot below the bottom of the footing. Removal may extend straight down along the sides of the footing. Replace the removed soils with properly consolidated, lean mix (2-sack) concrete backfill material.

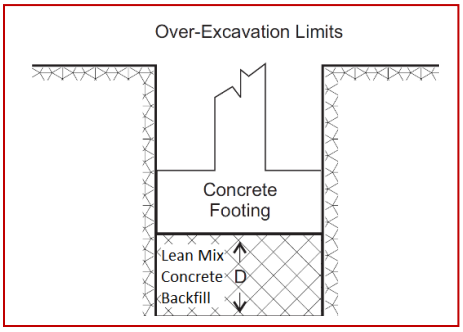

7.6 Slab-on-Grade Preparation

Following removal of any existing fill material, slabs-on-grade should be founded on a minimum thickness of 1 foot of imported, low expansive, engineered fill material. Remove native soils, as necessary, to a minimum depth of 1 foot below the bottom of the slab (depth D in the diagram below). Following the removal, scarify, moisten or dry as required, and compact all subgrade soils to a minimum depth of 8 inches. Replace the removed soils with properly compacted, imported, low to non-expansive, engineered fill material. The

aggregate base course below the slab may be included as part of the low to non-expansive engineered fill. In areas where dense limestone is encountered, scarification and recompaction is not required.

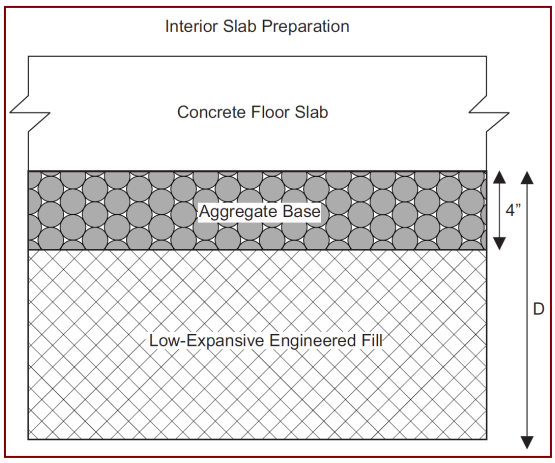

The subgrade preparation should be accomplished in a manner that will result in uniform water contents and densities after compaction.

7.7 Exterior Slab Preparation

The soils on this site have the potential to expand and shrink with changes in moisture content. In addition, frost penetration in the upper soils may cause surface heaving. Therefore, relatively lightweight exterior concrete flatwork such as sidewalks and patios may experience movements resulting in cracking or vertical offsets. To reduce the potential for damage, we recommend:

- Use of fill with low expansion potential
- Use of fill with low to negligible frost susceptibility
- Placement of effective control joints on relatively close centers
- Moisture-density control during placement of subbase fills
- Provision for adequate drainage in areas adjoining the slabs
- Use of designs which allow vertical movement between the exterior slabs and adjoining structural elements

It should be understood that these recommendations will help reduce the potential for soil movement and resulting distress, but will not eliminate this potential. Furthermore, the use of municipal specifications and details may not mitigate the potential for movements of the expansive or frost susceptible on-site soils.

7.8 Materials

a. Clean on-site native soils with a maximum dimension of 6 inches or imported materials may be used as fill material for the following:

- backfill (non-slab areas)
- Subbase fill in aggregate surfaced roadway areas

b. On-site clayey soils should not be used as subbase fill or backfill below any tanks, foundations, slabs-on-grade or behind any retaining walls. Imported soils with low expansive potential should be used in these areas.

c. Frozen soils should not be used as fill or backfill.

d. Lean mix (2-sack) concrete backfill should consist of aggregate base course type material combined with 2 sacks of cement per cubic yard. A coarse rock mix should not be used.

e. Imported soils should conform to the following:

- Gradation (ASTM C136): percent finer by weight

6"	100
4"	85-100
¾”	70-100
No. 4 Sieve	50-100
No. 200 Sieve	40 (max)

- Maximum expansive potential (%)[1] 1.5

- Maximum soluble sulfates (%) 0.10

f. Base course should conform to current Yavapai County specifications.

[1] Measured on a sample compacted to approximately 95 percent of the ASTM D698 maximum dry density at about 3 percent below optimum water content. The sample is confined under a 100 psf surcharge and submerged.

7.9 Placement and Compaction

a. Place and compact fill in horizontal lifts, using equipment and procedures that will produce recommended water contents and densities throughout the lift.

b. Uncompacted fill lifts should not exceed 8 inches.

c. Materials should be compacted to the following:

Material	Minimum Percent Compaction (ASTM D698)
• On-site soil, reworked:	
Below tanks	95
Below slabs-on-grade	90
Aggregate surfaced roadway areas	95
• On-site clayey soils, fill:	
Aggregate surfaced roadway areas	95
Landscape areas	85
• On-site low expansive potential soils, fill:	
Aggregate surfaced roadway areas	95
Below slabs-on-grade	95
Below tanks	95
• Imported soil, fill:	
Below slabs-on-grade	95
Below tanks	95
Aggregate surfaced roadway areas	95
• Aggregate base:	
Below slabs-on-grade	95
Below tanks	95
Aggregate surfaced roadway areas	100

Minimum Percent
Material Compaction (ASTM D698)

- Backfill:
  Structural 95
  Nonstructural 90

`

d. On-site soils should be compacted with a moisture content in the range of 1 percent below to 3 percent above optimum. Imported soils with low expansive potential and aggregate base course materials should be compacted with a moisture content in the range of 3 percent below to 3 percent above optimum.

7.10 Compliance

Recommendations for structural elements supported on compacted fills or prepared subgrade depend upon compliance with **EARTHWORK** recommendations. To assess compliance, observation and testing should be performed under the direction of a geotechnical engineer.

8.0 ADDITIONAL SERVICES

The recommendations provided in this report are based on the assumption that a sufficient schedule of tests and observations will be performed during construction to verify compliance. At a minimum, these tests and observations should be comprised of the following:

- Observations and testing during site preparation and earthwork;
- Observation of foundation excavations; and
- Consultation as may be required during construction.

Retaining the geotechnical engineer who developed your report to provide construction observation is the best way to verify compliance, and to help you manage the risks associated with unanticipated conditions.

9.0 LIMITATIONS

This report has been prepared assuming the project criteria described in Section 2.0. If changes in the project criteria occur, or if different subsurface conditions are encountered or become known, the conclusions and recommendations presented herein shall become invalid. In any such event, WT should be contacted in order to assess the effect that such variations may have on our conclusions and recommendations.

The recommendations presented are based entirely upon data derived from a limited number of samples obtained from widely spaced test pits/borings. The attached logs are indicators of subsurface conditions only at the specific locations and times noted. This report assumes the uniformity of the geology and soil structure between test pits/borings, however variations can and often do exist. Whenever any deviation, difference or change is encountered or becomes known, WT should be contacted.

This report is for the exclusive benefit of our client alone. There are no intended third-party beneficiaries of our contract with the client or this report, and nothing contained in the contract or this report shall create any express or implied contractual or any other relationship with, or claim or cause of action for, any third party against WT.

This report is valid for the earlier of one year from the date of issuance, a change in circumstances, or discovered variations. After expiration, no person or entity shall rely on this report without the express written authorization of WT.

10.0 CLOSURE

We prepared this report as an aid to the designers of the proposed project. The comments, statements, recommendations and conclusions set forth in this report reflect the opinions of the authors. These opinions are based upon data obtained at the location of the test pits/borings, and from laboratory tests. Work on your project was performed in accordance with generally accepted standards and practices utilized by professionals providing similar services in this locality. No other warranty, express or implied, is made.

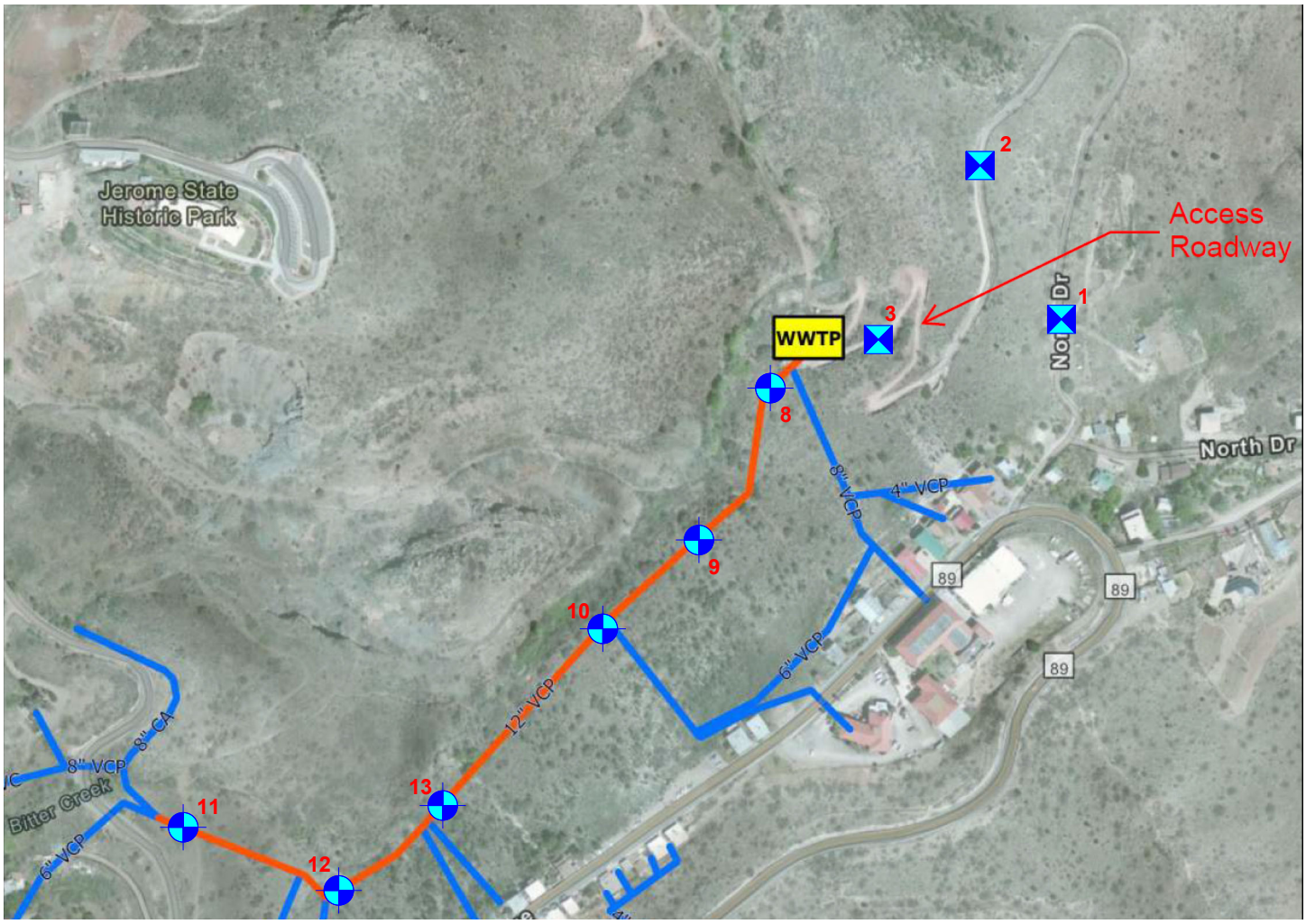

Not to Scale

Approximate Hand Auger Boring Location

Approximate Test Pit Location

JEROME WWTP UPGRADES	
Boring/Test Pit Location Diagram	
Western Technologies Inc.	
Job No.: 2522JW197	Plate: 1

Geotechnical Environmental Inspections Materials

Western Technologies Inc.
The Quality People
Since 1955

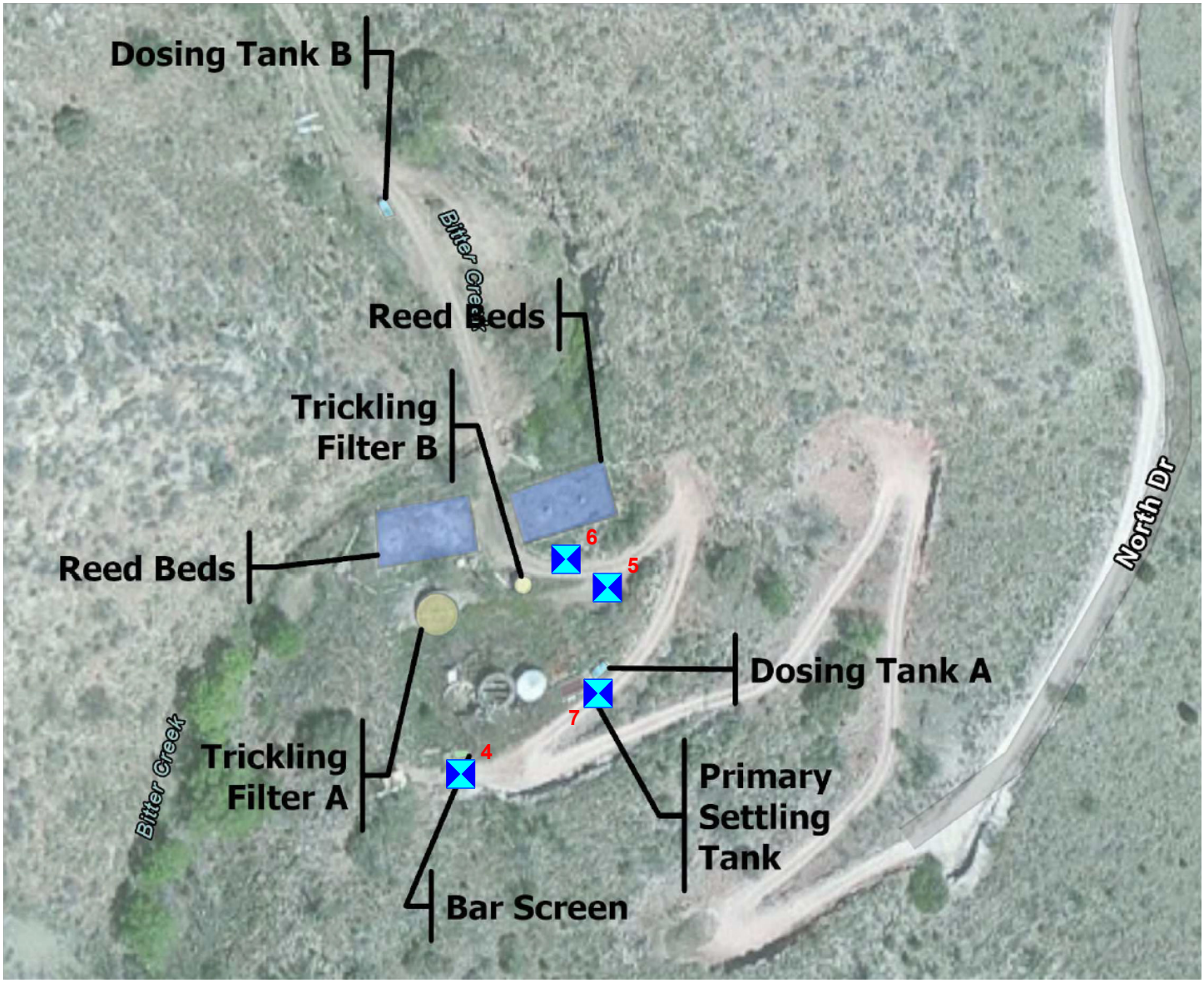

Not to Scale

Approximate Test Pit Location

JEROME WWTP UPGRADES	
Test Pit Location Diagram	
Western Technologies Inc.	
Job No.: 2522JW197	Plate: 2

Geotechnical Environmental Inspections Materials

Western Technologies Inc. The Quality People Since 1955

Allowable Soil Bearing Capacity	The recommended maximum contact stress developed at the interface of the foundation element and the supporting material.
Backfill	A specified material placed and compacted in a confined area.
Base Course	A layer of specified aggregate material placed on a subgrade or subbase.
Base Course Grade	Top of base course.
Bench	A horizontal surface in a sloped deposit.
Caisson/Drilled Shaft	A concrete foundation element cast in a circular excavation which may have an enlarged base (or belled caisson).
Concrete Slabs-On-Grade	A concrete surface layer cast directly upon base course, subbase or subgrade.
Crushed Rock Base Course	A base course composed of crushed rock of a specified gradation.
Differential Settlement	Unequal settlement between or within foundation elements of a structure.
Engineered Fill	Specified soil or aggregate material placed and compacted to specified density and/or moisture conditions under observations of a representative of a soil engineer.
Existing Fill	Materials deposited through the action of man prior to exploration of the site.
Existing Grade	The ground surface at the time of field exploration.
Expansive Potential	The potential of a soil to expand (increase in volume) due to absorption of moisture.
Fill	Materials deposited by the actions of man.
Finished Grade	The final grade created as a part of the project.
Gravel Base Course	A base course composed of naturally occurring gravel with a specified gradation.
Heave	Upward movement.
Native Grade	The naturally occurring ground surface.
Native Soil	Naturally occurring on-site soil.
Rock	A natural aggregate of mineral grains connected by strong and permanent cohesive forces. Usually requires drilling, wedging, blasting or other methods of extraordinary force for excavation.
Sand and Gravel Base Course	A base course of sand and gravel of a specified gradation.
Sand Base Course	A base course composed primarily of sand of a specified gradation.
Scarify	To mechanically loosen soil or break down existing soil structure.
Settlement	Downward movement.
Soil	Any unconsolidated material composed of discrete solid particles, derived from the physical and/or chemical disintegration of vegetable or mineral matter, which can be separated by gentle mechanical means such as agitation in water.
Strip	To remove from present location.
Subbase	A layer of specified material placed to form a layer between the subgrade and base course.
Subbase Grade	Top of subbase.
Subgrade	Prepared native soil surface.

©81WTI
091614

COARSE-GRAINED SOILS

LESS THAN 50% FINES

GROUP SYMBOLS	DESCRIPTION	MAJOR DIVISIONS
GW	WELL-GRADED GRAVEL OR WELL-GRADED GRAVEL WITH SAND, LESS THAN 5% FINES	GRAVELS MORE THAN HALF OF COARSE FRACTION IS LARGER THAN NO. 4 SIEVE SIZE
GP	POORLY-GRADED GRAVEL OR POORLY-GRADED GRAVEL WITH SAND, LESS THAN 5% FINES	
GM	SILTY GRAVEL OR SILTY GRAVEL WITH SAND, MORE THAN 12% FINES	
GC	CLAYEY GRAVEL OR CLAYEY GRAVEL WITH SAND, MORE THAN 12% FINES	
SW	WELL-GRADED SAND OR WELL-GRADED SAND WITH GRAVEL, LESS THAN 5% FINES	SANDS MORE THAN HALF OF COARSE FRACTION IS SMALLER THAN NO. 4 SIEVE SIZE
SP	POORLY-GRADED SAND OR POORLY-GRADED SAND WITH GRAVEL, LESS THAN 5% FINES	
SM	SILTY SAND OR SILTY SAND WITH GRAVEL, MORE THAN 12% FINES	
SC	CLAYEY SAND OR CLAYEY SAND WITH GRAVEL, MORE THAN 12% FINES	

NOTE: Coarse-grained soils receive dual symbols if they contain 5% to 12% fines (e.g., SW-SM, GP-GC).

FINE-GRAINED SOILS

MORE THAN 50% FINES

GROUP SYMBOLS	DESCRIPTION	MAJOR DIVISIONS
ML	SILT, SILT WITH SAND OR GRAVEL, SANDY SILT, OR GRAVELLY SILT	SILTS AND CLAYS LIQUID LIMIT LESS THAN 50
CL	LEAN CLAY OF LOW TO MEDIUM PLASTICITY, SANDY CLAY, OR GRAVELLY CLAY	
OL	ORGANIC SILT OR ORGANIC CLAY OF LOW TO MEDIUM PLASTICITY	
MH	ELASTIC SILT, SANDY ELASTIC SILT, OR GRAVELLY ELASTIC SILT	SILTS AND CLAYS LIQUID LIMIT MORE THAN 50
CH	FAT CLAY OF HIGH PLASTICITY, SANDY FAT CLAY, OR GRAVELLY FAT CLAY	
OH	ORGANIC SILT OR ORGANIC CLAY OF HIGH PLASTICITY	
PT	PEAT AND OTHER HIGHLY ORGANIC SOILS	HIGHLY ORGANIC SOILS

NOTE: Fine-grained soils may receive dual classification based upon plasticity characteristics (e.g. CL-ML).

SOIL SIZES

COMPONENT	SIZE RANGE
BOULDERS	Above 12 in.
COBBLES	3 in. – 12 in.
GRAVEL	No. 4 – 3 in.
Coarse	¾ in. – 3 in.
Fine	No. 4 – ¾ in.
SAND	No. 200 – No. 4
Coarse	No. 10 – No. 4
Medium	No. 40 – No. 10
Fine	No. 200 – No. 40
Fines (Silt or Clay)	Below No. 200

NOTE: Only sizes smaller than three inches are used to classify soils

CONSISTENCY

CLAYS & SILTS	BLOWS PER FOOT
VERY SOFT	0 – 2
SOFT	3 – 4
FIRM	5 – 8
STIFF	9 – 15
VERY STIFF	16 – 30
HARD	OVER 30

RELATIVE DENSITY

SANDS & GRAVELS	BLOWS PER FOOT
VERY LOOSE	0 – 4
LOOSE	5 – 10
MEDIUM DENSE	11 – 30
DENSE	31 – 50
VERY DENSE	OVER 50

NOTE: Number of blows using 140-pound hammer falling 30 inches to drive a 2-inch-OD (1⅜-inch ID) split-barrel sampler (ASTM D1586).

PLASTICITY OF FINE GRAINED SOILS

PLASTICITY INDEX	TERM
0	NON-PLASTIC
1 – 7	LOW
8 – 20	MEDIUM
Over 20	HIGH

DEFINITION OF WATER CONTENT

DRY
SLIGHTLY DAMP
DAMP
MOIST
WET
SATURATED

©81 WTI
090414

The number shown in **"BORING NO."** or "**TEST PIT NO.**" refers to the approximate location of the same number indicated on the "Boring/Test Pit Location Diagram" as positioned in the field by pacing or measurement from property lines and/or existing features.

"DRILLING TYPE" refers to the exploratory equipment used in the boring. Hand auger methods were used. The dimension presented is the outside diameter of the auger used.

"EQUIPMENT TYPE" refers to the equipment used in the excavation of the test pit, and may include the width of the bucket on the excavator and the use of "rock" teeth or attachments.

"SAMPLE TYPE" refers to the form of sample recovery, in which **R** = Ring-lined sample, **G** = Grab sample.

"DRY DENSITY (LBS/CU FT)" refers to the laboratory-determined dry density in pounds per cubic foot. The symbol **"NR"** indicates that no sample was recovered.

"WATER (MOISTURE) CONTENT (% OF DRY WT.)" refers to the laboratory-determined water content in percent using the standard test method ASTM D2216.

"USCS" refers to the "Unified Soil Classification System" Group Symbol for the soil type as defined by ASTM D2487 and D2488. The soils were classified visually in the field, and where appropriate, classifications were modified by visual examination of samples in the laboratory and/or by appropriate tests.

These notes and boring/test pit logs are intended for use in conjunction with the purposes of our services defined in the text. Boring/test pit log data should not be construed as part of the construction plans nor as defining construction conditions.

Boring/test pit logs depict our interpretations of subsurface conditions at the locations and on the date(s) noted. Variations in subsurface conditions and characteristics may occur between borings/test pits. Groundwater levels may fluctuate due to seasonal variations and other factors.

The stratification lines shown on the boring/test pit logs represent our interpretation of the approximate boundary between soil or rock types based upon visual field classification at the boring/test pit location. The transition between materials is approximate and may be more or less gradual than indicated.

©81WTI
091614

DATE EXCAVATED: **9-16-22**
LOCATION: **See Location Diagram**
ELEVATION: **Not Determined**

TEST PIT NO. 1

EQUIPMENT: **CASE 580N**
EXCAVATION TYPE: **24" BUCKET**
FIELD ENGINEER: **C. Bartlett**

MOISTURE CONTENT (% OF DRY WT.)	DRY DENSITY (LBS/CU FT)	SAMPLE TYPE	SAMPLE	BLOWS/FT.	DEPTH (FEET)	USCS	GRAPHIC	SOIL DESCRIPTION
		G				GM		AGGREGATE BASE COURSE (3 Inches Thick) Silty GRAVEL; with sand, cobbles and boulders, tan, slightly damp
					5			**Excavation Stopped at 5 Feet**
					10			

N- **STANDARD PENETRATION TEST**
R- **RING SAMPLE**
C- **CORE: %RECOVERY/RQD**
G- **GRAB SAMPLE**
B- **BUCKET SAMPLE**

NOTES: **Groundwater Not Encountered**

THIS SUMMARY APPLIES ONLY AT THIS LOCATION AND AT THE TIME OF LOGGING. CONDITIONS MAY DIFFER AT OTHER LOCATIONS AND MAY CHANGE AT THIS LOCATION WITH TIME. DATA PRESENTED IS A SIMPLIFICATION.

Geotechnical Environmental Inspections Materials

Western Technologies Inc.
The Quality People
Since 1955

PROJECT: **JEROME WWTP IMPROVEMENTS**
PROJECT NO.: **2522JW197**

PLATE **A-4**

TEST PIT LOG

DATE EXCAVATED: **9-16-22**
LOCATION: **See Location Diagram**
ELEVATION: **Not Determined**

TEST PIT NO. 2

EQUIPMENT: **CASE 580N**
EXCAVATION TYPE: **24" BUCKET**
FIELD ENGINEER: **C. Bartlett**

MOISTURE CONTENT (% OF DRY WT.)	DRY DENSITY (LBS/CU FT)	SAMPLE TYPE	SAMPLE	BLOWS/FT.	DEPTH (FEET)	USCS	GRAPHIC	SOIL DESCRIPTION
		G				SC		Clayey SAND; with gravel, cobbles and boulders, tan, slightly damp
4.4	87	R		Push				
					5			**Excavation Stopped at 5 Feet**
					10			

N- **STANDARD PENETRATION TEST**
R- **RING SAMPLE**
C- **CORE: %RECOVERY/RQD**
G- **GRAB SAMPLE**
B- **BUCKET SAMPLE**

NOTES: **Groundwater Not Encountered**

THIS SUMMARY APPLIES ONLY AT THIS LOCATION AND AT THE TIME OF LOGGING. CONDITIONS MAY DIFFER AT OTHER LOCATIONS AND MAY CHANGE AT THIS LOCATION WITH TIME. DATA PRESENTED IS A SIMPLIFICATION.

Geotechnical Environmental Inspections Materials

Western Technologies Inc.
The Quality People
Since 1955

PROJECT: **JEROME WWTP IMPROVEMENTS**
PROJECT NO.: **2522JW197**

PLATE **A-5**

TEST PIT LOG

DATE EXCAVATED: **9-16-22**
LOCATION: **See Location Diagram**
ELEVATION: **Not Determined**

TEST PIT NO. 3

EQUIPMENT: **CASE 580N**
EXCAVATION TYPE: **24" BUCKET**
FIELD ENGINEER: **C. Bartlett**

MOISTURE CONTENT (% OF DRY WT.)	DRY DENSITY (LBS/CU FT)	SAMPLE TYPE	SAMPLE	BLOWS/FT.	DEPTH (FEET)	USCS	GRAPHIC	SOIL DESCRIPTION
		G				GC		Clayey GRAVEL; with sand, cobbles and boulders, tan, slightly damp
3.4	99	R		Push				
					5			**Excavation Stopped at 5 Feet**
					10			

N- **STANDARD PENETRATION TEST**
R- **RING SAMPLE**
C- **CORE: %RECOVERY/RQD**
G- **GRAB SAMPLE**
B- **BUCKET SAMPLE**

NOTES: **Groundwater Not Encountered**

THIS SUMMARY APPLIES ONLY AT THIS LOCATION AND AT THE TIME OF LOGGING. CONDITIONS MAY DIFFER AT OTHER LOCATIONS AND MAY CHANGE AT THIS LOCATION WITH TIME. DATA PRESENTED IS A SIMPLIFICATION.

Geotechnical Environmental Inspections Materials

Western Technologies Inc.
The Quality People
Since 1955

PROJECT: **JEROME WWTP IMPROVEMENTS**
PROJECT NO.: **2522JW197**

PLATE **A-6**

TEST PIT LOG

DATE EXCAVATED: **9-16-22**
LOCATION: **See Location Diagram**
ELEVATION: **Not Determined**

TEST PIT NO. 4

EQUIPMENT: **CASE 580N**
EXCAVATION TYPE: **24" BUCKET**
FIELD ENGINEER: **C. Bartlett**

MOISTURE CONTENT (% OF DRY WT.)	DRY DENSITY (LBS/CU FT)	SAMPLE TYPE	SAMPLE	BLOWS/FT.	DEPTH (FEET)	USCS	GRAPHIC	SOIL DESCRIPTION
		G				GC		Clayey GRAVEL; with sand, cobbles and boulders, light brown, slightly damp
					5			**Excavator Refusal at 3 Feet on LIMESTONE**
					10			

N- **STANDARD PENETRATION TEST**
R- **RING SAMPLE**
C- **CORE: %RECOVERY/RQD**
G- **GRAB SAMPLE**
B- **BUCKET SAMPLE**

NOTES: **Groundwater Not Encountered**

THIS SUMMARY APPLIES ONLY AT THIS LOCATION AND AT THE TIME OF LOGGING. CONDITIONS MAY DIFFER AT OTHER LOCATIONS AND MAY CHANGE AT THIS LOCATION WITH TIME. DATA PRESENTED IS A SIMPLIFICATION.

Geotechnical Environmental Inspections Materials

Western Technologies Inc.
The Quality People
Since 1955

PROJECT: **JEROME WWTP IMPROVEMENTS**
PROJECT NO.: **2522JW197**

PLATE **A-7**

TEST PIT LOG

DATE EXCAVATED: **9-16-22**
LOCATION: **See Location Diagram**
ELEVATION: **Not Determined**

TEST PIT NO. 5

EQUIPMENT: **CASE 580N**
EXCAVATION TYPE: **24" BUCKET**
FIELD ENGINEER: **C. Bartlett**

MOISTURE CONTENT (% OF DRY WT.)	DRY DENSITY (LBS/CU FT)	SAMPLE TYPE	SAMPLE	BLOWS/FT.	DEPTH (FEET)	USCS	GRAPHIC	SOIL DESCRIPTION
		G			0	GC		Clayey GRAVEL; with sand, cobbles and boulders, brown, damp
					5			
					10			**Excavator Refusal at 8 Feet on LIMESTONE**

N- **STANDARD PENETRATION TEST**
R- **RING SAMPLE**
C- **CORE: %RECOVERY/RQD**
G- **GRAB SAMPLE**
B- **BUCKET SAMPLE**

NOTES: **Groundwater Not Encountered**

THIS SUMMARY APPLIES ONLY AT THIS LOCATION AND AT THE TIME OF LOGGING. CONDITIONS MAY DIFFER AT OTHER LOCATIONS AND MAY CHANGE AT THIS LOCATION WITH TIME. DATA PRESENTED IS A SIMPLIFICATION.

Geotechnical Environmental Inspections Materials

Western Technologies Inc.
The Quality People
Since 1955

PROJECT: **JEROME WWTP IMPROVEMENTS**
PROJECT NO.: **2522JW197**

PLATE **A-8**

TEST PIT LOG

DATE EXCAVATED: **9-16-22**
LOCATION: **See Location Diagram**
ELEVATION: **Not Determined**

TEST PIT NO. 6

EQUIPMENT: **CASE 580N**
EXCAVATION TYPE: **24" BUCKET**
FIELD ENGINEER: **C. Bartlett**

MOISTURE CONTENT (% OF DRY WT.)	DRY DENSITY (LBS/CU FT)	SAMPLE TYPE	SAMPLE	BLOWS/FT.	DEPTH (FEET)	USCS	GRAPHIC	SOIL DESCRIPTION
		G				GC		Clayey GRAVEL; with sand, cobbles and boulders, brown, damp
					5			
					10			**Excavator Refusal at 8 Feet on LIMESTONE**

N- **STANDARD PENETRATION TEST**
R- **RING SAMPLE**
C- **CORE: %RECOVERY/RQD**
G- **GRAB SAMPLE**
B- **BUCKET SAMPLE**

NOTES: **Groundwater Not Encountered**

THIS SUMMARY APPLIES ONLY AT THIS LOCATION AND AT THE TIME OF LOGGING. CONDITIONS MAY DIFFER AT OTHER LOCATIONS AND MAY CHANGE AT THIS LOCATION WITH TIME. DATA PRESENTED IS A SIMPLIFICATION.

Geotechnical Environmental Inspections Materials

Western Technologies Inc.
The Quality People
Since 1955

PROJECT: **JEROME WWTP IMPROVEMENTS**
PROJECT NO.: **2522JW197**

PLATE **A-9**

TEST PIT LOG

DATE EXCAVATED: **9-16-22**
LOCATION: **See Location Diagram**
ELEVATION: **Not Determined**

TEST PIT NO. 7

EQUIPMENT: **CASE 580N**
EXCAVATION TYPE: **24" BUCKET**
FIELD ENGINEER: **C. Bartlett**

MOISTURE CONTENT (% OF DRY WT.)	DRY DENSITY (LBS/CU FT)	SAMPLE TYPE	SAMPLE	BLOWS/FT.	DEPTH (FEET)	USCS	GRAPHIC	SOIL DESCRIPTION
		G				GC		Clayey GRAVEL; with sand, cobbles and boulders, brown, damp
					5			**Excavator Refusal at 5 Feet on LIMESTONE**
					10			

N- **STANDARD PENETRATION TEST**
R- **RING SAMPLE**
C- **CORE: %RECOVERY/RQD**
G- **GRAB SAMPLE**
B- **BUCKET SAMPLE**

NOTES: **Groundwater Not Encountered**

THIS SUMMARY APPLIES ONLY AT THIS LOCATION AND AT THE TIME OF LOGGING. CONDITIONS MAY DIFFER AT OTHER LOCATIONS AND MAY CHANGE AT THIS LOCATION WITH TIME. DATA PRESENTED IS A SIMPLIFICATION.

Geotechnical Environmental Inspections Materials

Western Technologies Inc.
The Quality People
Since 1955

PROJECT: **JEROME WWTP IMPROVEMENTS**
PROJECT NO.: **2522JW197**

PLATE **A-10**

TEST PIT LOG

DATE DRILLED: **9-16-22**
LOCATION: **See Location Diagram**
ELEVATION: **Not Determined**

BORING NO. 8

EQUIPMENT TYPE: **HAND AUGE**
DRILLING TYPE: **4" DIA. AUGER**
FIELD ENGINEER: **C. Bartlett**

MOISTURE CONTENT (% OF DRY WT)	DRY DENSITY (LBS/CU FT)	SAMPLE TYPE	SAMPLE	BLOWS/FT.	DEPTH (FEET)	USCS	GRAPHIC	SOIL DESCRIPTION
		G				GC		Clayey GRAVEL; with sand, cobbles and boulders, brown, slightly damp
								Hand Auger Refusal at 1 Foot on Cobbles and Boulders
					5			
					10			

N- STANDARD PENETRATION TEST
R- RING SAMPLE
CA- CALIFORNIA MODIFIED SAMPLER
G- GRAB SAMPLE
B- BUCKET SAMPLE

NOTES: **Groundwater Not Encountered**

THIS SUMMARY APPLIES ONLY AT THIS LOCATION AND AT THE TIME OF LOGGING. CONDITIONS MAY DIFFER AT OTHER LOCATIONS AND MAY CHANGE AT THIS LOCATION WITH TIME. DATA PRESENTED IS A SIMPLIFICATION.

Geotechnical Environmental Inspections Materials
Western Technologies Inc.
The Quality People
Since 1955

PROJECT: **JEROME WWTP IMPROVEMENTS**
PROJECT NO.: **2522JW197**

PLATE **A-11**

BORING LOG

DATE DRILLED: **9-16-22**
LOCATION: **See Location Diagram**
ELEVATION: **Not Determined**

BORING NO. 9

EQUIPMENT TYPE: **HAND AUGE**
DRILLING TYPE: **4" DIA. AUGER**
FIELD ENGINEER: **C. Bartlett**

MOISTURE CONTENT (% OF DRY WT)	DRY DENSITY (LBS/CU FT)	SAMPLE TYPE	SAMPLE	BLOWS/FT.	DEPTH (FEET)	USCS	GRAPHIC	SOIL DESCRIPTION
		G				SC		Clayey SAND; with gravel, cobbles and boulders, brown, slightly damp
								Hand Auger Refusal at 1 Foot on Cobbles and Boulders
					5			
					10			

THIS SUMMARY APPLIES ONLY AT THIS LOCATION AND AT THE TIME OF LOGGING. CONDITIONS MAY DIFFER AT OTHER LOCATIONS AND MAY CHANGE AT THIS LOCATION WITH TIME. DATA PRESENTED IS A SIMPLIFICATION.

N- STANDARD PENETRATION TEST
R- RING SAMPLE
CA- CALIFORNIA MODIFIED SAMPLER
G- GRAB SAMPLE
B- BUCKET SAMPLE

NOTES: **Groundwater Not Encountered**

Geotechnical Environmental Inspections Materials

Western Technologies Inc.
The Quality People
Since 1955

PROJECT: **JEROME WWTP IMPROVEMENTS**
PROJECT NO.: **2522JW197**

PLATE **A-12**

BORING LOG

DATE DRILLED: **9-16-22**
LOCATION: **See Location Diagram**
ELEVATION: **Not Determined**

BORING NO. 10

EQUIPMENT TYPE: **HAND AUGE**
DRILLING TYPE: **4" DIA. AUGER**
FIELD ENGINEER: **C. Bartlett**

MOISTURE CONTENT (% OF DRY WT)	DRY DENSITY (LBS/CU FT)	SAMPLE TYPE	SAMPLE	BLOWS/FT.	DEPTH (FEET)	USCS	GRAPHIC	SOIL DESCRIPTION
		G				GC		Clayey GRAVEL; with sand, cobbles and boulders, brown, slightly damp
								Hand Auger Refusal at 1 Foot on Cobbles and Boulders
					5			
					10			

N- STANDARD PENETRATION TEST
R- RING SAMPLE
CA- CALIFORNIA MODIFIED SAMPLER
G- GRAB SAMPLE
B- BUCKET SAMPLE

NOTES: **Groundwater Not Encountered**

THIS SUMMARY APPLIES ONLY AT THIS LOCATION AND AT THE TIME OF LOGGING. CONDITIONS MAY DIFFER AT OTHER LOCATIONS AND MAY CHANGE AT THIS LOCATION WITH TIME. DATA PRESENTED IS A SIMPLIFICATION.

Geotechnical Environmental Inspections Materials
Western Technologies Inc.
The Quality People
Since 1955

PROJECT: **JEROME WWTP IMPROVEMENTS**
PROJECT NO.: **2522JW197**

PLATE **A-13**

BORING LOG

DATE DRILLED: **9-16-22**
LOCATION: **See Location Diagram**
ELEVATION: **Not Determined**

BORING NO. 11

EQUIPMENT TYPE: **HAND AUGE**
DRILLING TYPE: **4" DIA. AUGER**
FIELD ENGINEER: **C. Bartlett**

MOISTURE CONTENT (% OF DRY WT)	DRY DENSITY (LBS/CU FT)	SAMPLE TYPE	SAMPLE	BLOWS/FT.	DEPTH (FEET)	USCS	GRAPHIC	SOIL DESCRIPTION
		G				GC		Clayey GRAVEL; with sand, cobbles and boulders, brown, slightly damp
								Hand Auger Refusal at 1 Foot on Cobbles and Boulders
					5			
					10			

N- STANDARD PENETRATION TEST
R- RING SAMPLE
CA- CALIFORNIA MODIFIED SAMPLER
G- GRAB SAMPLE
B- BUCKET SAMPLE

NOTES: **Groundwater Not Encountered**

THIS SUMMARY APPLIES ONLY AT THIS LOCATION AND AT THE TIME OF LOGGING. CONDITIONS MAY DIFFER AT OTHER LOCATIONS AND MAY CHANGE AT THIS LOCATION WITH TIME. DATA PRESENTED IS A SIMPLIFICATION.

Geotechnical Environmental Inspections Materials
Western Technologies Inc.
The Quality People
Since 1955

PROJECT: **JEROME WWTP IMPROVEMENTS**
PROJECT NO.: **2522JW197**

PLATE **A-14**

BORING LOG

DATE DRILLED: **9-16-22**
LOCATION: **See Location Diagram**
ELEVATION: **Not Determined**

BORING NO. 12

EQUIPMENT TYPE: **HAND AUGE**
DRILLING TYPE: **4" DIA. AUGER**
FIELD ENGINEER: **C. Bartlett**

MOISTURE CONTENT (% OF DRY WT)	DRY DENSITY (LBS/CU FT)	SAMPLE TYPE	SAMPLE	BLOWS/FT.	DEPTH (FEET)	USCS	GRAPHIC	SOIL DESCRIPTION
		G				GM		Silty GRAVEL; with sand, cobbles and boulders, brown, slightly damp
								Hand Auger Refusal at 1 Foot on Cobbles and Boulders
					5			
					10			

N- STANDARD PENETRATION TEST
R- RING SAMPLE
CA- CALIFORNIA MODIFIED SAMPLER
G- GRAB SAMPLE
B- BUCKET SAMPLE

NOTES: **Groundwater Not Encountered**

THIS SUMMARY APPLIES ONLY AT THIS LOCATION AND AT THE TIME OF LOGGING. CONDITIONS MAY DIFFER AT OTHER LOCATIONS AND MAY CHANGE AT THIS LOCATION WITH TIME. DATA PRESENTED IS A SIMPLIFICATION.

Geotechnical Environmental Inspections Materials
Western Technologies Inc.
The Quality People
Since 1955

PROJECT: **JEROME WWTP IMPROVEMENTS**
PROJECT NO.: **2522JW197**

PLATE **A-15**

BORING LOG

DATE DRILLED: **9-16-22**
LOCATION: **See Location Diagram**
ELEVATION: **Not Determined**

BORING NO. 13

EQUIPMENT TYPE: **HAND AUGE**
DRILLING TYPE: **4" DIA. AUGER**
FIELD ENGINEER: **C. Bartlett**

MOISTURE CONTENT (% OF DRY WT)	DRY DENSITY (LBS/CU FT)	SAMPLE TYPE	SAMPLE	BLOWS/FT.	DEPTH (FEET)	USCS	GRAPHIC	SOIL DESCRIPTION
		G				GC		Clayey GRAVEL; with sand, cobbles and boulders, brown, slightly damp
								Hand Auger Refusal at 1 Foot on Cobbles and Boulders
					5			
					10			

N- STANDARD PENETRATION TEST
R- RING SAMPLE
CA- CALIFORNIA MODIFIED SAMPLER
G- GRAB SAMPLE
B- BUCKET SAMPLE

NOTES: **Groundwater Not Encountered**

THIS SUMMARY APPLIES ONLY AT THIS LOCATION AND AT THE TIME OF LOGGING. CONDITIONS MAY DIFFER AT OTHER LOCATIONS AND MAY CHANGE AT THIS LOCATION WITH TIME. DATA PRESENTED IS A SIMPLIFICATION.

Geotechnical Environmental Inspections Materials
Western Technologies Inc.
The Quality People
Since 1955

PROJECT: **JEROME WWTP IMPROVEMENTS**
PROJECT NO.: **2522JW197**

PLATE **A-16**

BORING LOG

Test Pit/ Boring No.	Depth (ft)	USCS Class.	Particle Size Distribution (%) Passing by Weight							Atterberg Limits		Laboratory Compaction Characteristics			Remarks
			3"	¾"	#4	#10	#40	#200	2µ	LL	PI	Dry Density (pcf)	Optimum Moisture (%)	Method	
1	0-5	GM	100	71	56	48	31	15.5			NP				2
6	0-5	GC	100	69	50	41	30	18.3		43	18				2
7	0-5	GC	100	77	59	49	35	21.6		37	20				2
9	0-1	SC	100	87	71	57	40	25.6		41	16				2
12	0-1	GM	100	74	56	50	44	26.4		42	14				2

NOTE: NP = Non-plastic
µ = microns (2µ = 0.002mm)

REMARKS

Classification / Particle Size / Moisture-Density Relationship

1. Visual
2. Laboratory Tested
3. Minus #200 Only
4. Test Method ASTM D698/AASHTO T99
5. Test Method ASTM D1557/AASHTO T180
6. From the ADOT Family of Curves

Geotechnical Environmental Inspections Materials
Western Technologies Inc. The Quality People Since 1955
wt-us.com

PROJECT: TOWN OF JEROME WWTP IMPROVEMENTS
JOB NO.: 2522JW197

PLATE
B-1

SOIL PROPERTIES

Test Pit No.	Depth (ft.)	USCS Class.	Initial Dry Density (pcf)	Initial Water Content (%)	Laboratory Compaction Characteristics			Expansion Properties		Plasticity		Soluble		Remarks
					Dry Density(pcf)	Optimum Moisture(%)	Method	Surcharge (ksf)	Expansion (%)	LL	PI	Salts (ppm)	Sulfate (ppm)	
6	0-5	GC	91.5	17.4	96.4	20.3	A	0.1	1.9					1,2,3
7	0-5	GC	109.8	12.0	115.7	14.9	A	0.1	2.1					1,2,3

Notes: Initial Dry Density and Initial Water Content are remolded.

Remarks

1. Compacted density (approx. 95% of ASTM D698 max. density at moisture content slightly below optimum.)
2. Submerged to approximate saturation.
3. Test Method ASTM D698/AASHTO T99
4. Test Method ASTM D1557/AASHTO T180
5. From the ADOT Family of Curves

Geotechnical Environmental Inspections Materials

Western Technologies Inc. The Quality People Since 1955

wt-us.com

PROJECT: TOWN OF JEROME WWTP IMPROVEMENTS

JOB NO.: 2522JW197

SOIL PROPERTIES

PLATE

B-2

Test No.	Depth (ft)	Rock Classification	Unit Weight (pcf)	Unconfined Compressive Strength (psi)	Remarks
1	Surface	Limestone	166.7	4,150	1,2
2	Surface	Limestone	167.8	10,940	1,2

REMARKS:

1. ASTM D7012 – Unit Weight of Rock Cores
2. ASTM C39 – Unconfined Compressive Strength of Rock Cores

Geotechnical
Environmental
Inspections
Materials
Western Technologies Inc.
The Quality People
Since 1955
wt-us.com

PROJECT: TOWN OF JEROME WWTP IMPROVEMENTS
JOB NO.: 2522JW197

PLATE
B-3

ROCK PROPERTIES

CORROSIVITY TEST RESULTS

The procedures for soil survey tests and observations can be found in Appendix X1.1 of ASTM A674-10 and includes five soil properties: earth resistivity • pH • redox potential • sulfides • moisture.

Test Pit 7(0-5):

Analysis	Results		Points
Resistivity (ohm-cm)	1401		10
pH	8.5		0
Redox Potential (mV)	+134		0
Sulfides	trace		2
Moisture	fair		1
		Total Points	13

Boring 12(0-1):

Analysis	Results		Points
Resistivity (ohm-cm)	2481		2
pH	8.1		0
Redox Potential (mV)	+314		0
Sulfides	trace		2
Moisture	fair		1
		Total Points	5

The test procedure states that if the sum of the points is greater than 10, the soil is considered corrosive to ductile iron pipe and special protection against exterior corrosion is necessary. This conclusion is limited to soil corrosion and does not include consideration of stray direct current.

MOTZZ LABORATORY, INC.

Report: 943846
Reported: 9/28/2022
Received: 9/26/2022
PO: 2522P176

Laboratory Analysis Report

Western Technologies - Flagstaff
Gregory L. E. Burr
2400 East Huntington
Flagstaff, AZ 86004-8934

Project: 2522JW197

Lab Number	Sample ID
943846-2	1 (0-5')

Test Parameter

Test	*Method*	*Result*	*Units*
Soluble Salts	ARIZ 237b	1162	ppm
Sulfate	ARIZ 733b	236	ppm
Chloride	ARIZ 736b	7	ppm

Lab Number	Sample ID
943846-1	12 (0-1')

Test Parameter

Test	*Method*	*Result*	*Units*
Soluble Salts	ARIZ 237b	303	ppm
Sulfate	ARIZ 733b	15	ppm
Chloride	ARIZ 736b	7	ppm
Redox Potential	ASTM G200-09	314	(Eo) mV

BID FORM FOR CONSTRUCTION CONTRACT
ADDENDUM 1 VERSION

Contractor Name: _____

The terms used in this Bid with initial capital letters have the meanings stated in the Instructions to Bidders, the General Conditions, and the Supplementary Conditions.

ARTICLE 1—OWNER AND BIDDER

1.01 This Bid is submitted to:

Town of Jerome
Submitted electronically via email to tpierce@pacewater.com. Alternatively, Bidder may submit a hard copy the Town of Jerome, 600 Clark Street, Jerome, AZ 86331.

The undersigned Bidder proposes and agrees, if this Bid is accepted, to enter into an Agreement with Owner in the form included in the Bidding Documents to perform all Work as specified or indicated in the Bidding Documents for the prices and within the times indicated in this Bid and in accordance with the other terms and conditions of the Bidding Documents.

ARTICLE 2—ATTACHMENTS TO THIS BID

2.01 The following documents are submitted with and made a condition of this Bid:

A. Required Bid security;

B. List of Proposed Subcontractors;

~~C. List of Proposed Suppliers;~~

D. Evidence of authority to do business in the state of the Project; or a written covenant to obtain such authority within the time for acceptance of Bids;

E. Contractor's license number as evidence of Bidder's State Contractor's License or a covenant by Bidder to obtain said license within the time for acceptance of Bids;

F. Required Bidder Qualification Statement with supporting data; ~~and~~

G. If Bid amount exceeds $10,000, signed Compliance Statement (RD 400-6). Refer to specific equal opportunity requirements set forth in the Supplementary Conditions of the Construction Contract (EJCDC C-800);

H. If Bid amount exceeds $25,000, signed Certification Regarding Debarment, Suspension, Ineligibility and Voluntary Exclusion - Lower Tier Covered Transactions (AD-1048);

I. If Bid amount exceeds $100,000, signed RD Instruction 1940-Q Exhibit A-1, Certification for Contracts, Grants, and Loans.

ARTICLE 3—BASIS OF BID—LUMP SUM BID AND UNIT PRICES

3.01 *Lump Sum Bids*

A. Bidder will complete the Work in accordance with the Contract Documents for the following lump sum (stipulated) price(s), together with any Unit Prices indicated in Paragraph 3.02:

Copyright© 2018 National Society of Professional Engineers, American Council of Engineering Companies, and American Society of Civil Engineers. All rights reserved.

1. Lump Sum Price (Base Bid and Alternates)

BASE BID LUMP SUM BREAKDOWN					
	Item Description	**Unit**	**Estimated Qty**	**Bid Unit Price**	**Total Bid Price**
1	**ACCESS ROAD & SITE WORK**				
1.1	SWPPP	LS	1	$	$
1.2	Access Road (cut, grading, paving)	CY	4,440	$	$
1.3	Roadway Appurtenance (guardrail, gates, catch basins)	LS	1	$	$
1.4	Traffic Control	LS	1	$	$
2	**12" SEWER LINE IMPROVEMENTS**				
2.1	12" FPVC New Sewer Main	LF	143	$	$
2.2	Sewer Road Alignment Cut to Fill	CY	300	$	$
2.3	48" Manholes	EA	2	$	$
2.4	Bypass Plumbing and Equipment	LS	1	$	$
3	**TREATMENT PLANT SITE**				
3.1	Survey, Staking & Materials Testing	LS	1	$	$
3.2	Clearing & Grubbing	LS	1	$	$
3.3	Earthwork (Shoring, Erosion Control & Final Site Grading)	LS	1	$	$
3.4	Earthwork (Excavation, Fill & Backfill)	CY	2,495	$	$
3.5	Yard Piping	LS	1	$	$

Copyright© 2018 National Society of Professional Engineers, American Council of Engineering Companies, and American Society of Civil Engineers. All rights reserved.

BASE BID LUMP SUM BREAKDOWN					
	Item Description	**Unit**	**Estimated Qty**	**Bid Unit Price**	**Total Bid Price**
3.6	Fencing	LF	800	$	$
3.7	Blower / Admin Building	SF	750	$	$
3.8	Reed Bed Conversion to Drying Beds	LS	1	$	$
3.9	Wetland Cells Conversion to Emergency Overflow	LS	1	$	$
3.10	Retaining Walls	LF	262	$	$
3.11	Structural Concrete (SBR Tanks, Site, Chlorine Contact Channel)	CY	937	$	$
3.12	SBR Equipment	LS	1	$	$
3.13	Headworks Equipment	LS	1	$	$
3.14	Sludge Bagging Unit	LS	1	$	$
3.15	Polymer Dosing System	LS	1	$	$
3.16	Sludge Feed Pump	LS	1	$	$
3.17	Disinfection & Miscellaneous Equipment	LS	1	$	$
3.18	Site Electrical and Standby Generator	LS	1	$	$
3.19	Upgrade Site to 3 Phase Power	LS	1	$	$
4	**OTHER**				

Copyright© 2018 National Society of Professional Engineers, American Council of Engineering Companies, and American Society of Civil Engineers. All rights reserved.

BASE BID LUMP SUM BREAKDOWN					
	Item Description	**Unit**	**Estimated Qty**	**Bid Unit Price**	**Total Bid Price**
4.1	Mobilization/Demobilization	LS	1	$	$
4.2	Taxes	LS	1	$	$
				TOTAL BASE BID LUMP SUM AMOUNT	$

BID ALTERNATES LUMP SUM BREAKDOWN					
NEW 12" SEWER AND ACCESS ROAD					
	Item Description	**Unit**	**Estimated Qty**	**Bid Unit Price**	**Total Bid Price**
1	**Bid Adder:** 12" FPVC New Sewer Main	LF	2,750	$	$
2	**Bid Adder:** Restore Lateral Connections	EA	5	$	$
3	**Bid Adder:** Sewer Road Alignment Cut to Fill	CY	3,266	$	$
4	**Bid Adder:** 48" Manholes	EA	10	$	$
5	**Bid Adder:** Rockfall Barrier	LF	150	$	$
				TOTAL ALTERNATES LUMP SUM AMOUNT	

TOTAL LUMP SUM PRICE (BASE BID AND ALTERNATES)		
	Item Description	**Total Bid Price**
1	Total Lump Sum for Base Bid	$
2	Total Lump Sum for Bid Adder: New 12" Sewer and Access Road	$

Copyright© 2018 National Society of Professional Engineers, American Council of Engineering Companies, and American Society of Civil Engineers. All rights reserved.

TOTAL LUMP SUM BASE BID AND ALTERNATES PRICE	$

B. All specified cash allowance(s) are included in the price(s) set forth below, and have been computed in accordance with Paragraph 13.02 of the General Conditions.

TOTAL ALLOWANCE PRICE		
	Item Description	**Total Bid Price**
1	Materials Testing	$
	TOTAL ALLOWANCE PRICE	$

ARTICLE 4—DELETED

ARTICLE 5—DELETED

ARTICLE 6—TIME OF COMPLETION

6.01 Bidder agrees that the Work will be substantially complete and will be completed and ready for final payment in accordance with Paragraph 15.06 of the General Conditions on or before the dates or within the number of calendar days indicated in the Agreement.

6.02 **[Deleted]**

6.03 **[Deleted]**

6.04 Bidder accepts the provisions of the Agreement as to liquidated damages.

ARTICLE 7—BIDDER'S ACKNOWLEDGEMENTS: ACCEPTANCE PERIOD, INSTRUCTIONS, AND RECEIPT OF ADDENDA

7.01 *Bid Acceptance Period*

A. This Bid will remain subject to acceptance for 60 days after the Bid opening, or for such longer period of time that Bidder may agree to in writing upon request of Owner.

7.02 *Instructions to Bidders*

A. Bidder accepts all of the terms and conditions of the Instructions to Bidders, including without limitation those dealing with the disposition of Bid security.

7.03 *Receipt of Addenda*

A. Bidder hereby acknowledges receipt of the following Addenda:

Addendum Number	Addendum Date

Copyright© 2018 National Society of Professional Engineers, American Council of Engineering Companies, and American Society of Civil Engineers. All rights reserved.

7.04 **[Deleted]**

ARTICLE 8—BIDDER'S REPRESENTATIONS AND CERTIFICATIONS

8.01 *Bidder's Representations*

A. In submitting this Bid, Bidder represents the following:

1. Bidder has examined and carefully studied the Bidding Documents, including Addenda.

2. **[Deleted]**

3. Bidder is familiar with all Laws and Regulations that may affect cost, progress, and performance of the Work**, including all American Iron and Steel requirements.**

4. Bidder has carefully studied the reports of explorations and tests of subsurface conditions at or adjacent to the Site and the drawings of physical conditions relating to existing surface or subsurface structures at the Site that have been identified in the Supplementary Conditions, with respect to the Technical Data in such reports and drawings.

5. Bidder has carefully studied the reports and drawings relating to Hazardous Environmental Conditions, if any, at or adjacent to the Site that have been identified in the Supplementary Conditions, with respect to Technical Data in such reports and drawings.

6. Bidder has considered the information known to Bidder itself; information commonly known to contractors doing business in the locality of the Site; information and observations obtained from visits to the Site; the Bidding Documents; and the Technical Data identified in the Supplementary Conditions or by definition, with respect to the effect of such information, observations, and Technical Data on (a) the cost, progress, and performance of the Work; (b) the means, methods, techniques, sequences, and procedures of construction to be employed by Bidder, if selected as Contractor; and (c) Bidder's (Contractor's) safety precautions and programs.

7. Based on the information and observations referred to in the preceding paragraph, Bidder agrees that no further examinations, investigations, explorations, tests, studies, or data are necessary for the performance of the Work at the Contract Price, within the Contract Times, and in accordance with the other terms and conditions of the Contract.

8. Bidder is aware of the general nature of work to be performed by Owner and others at the Site that relates to the Work as indicated in the Bidding Documents.

9. Bidder has given Engineer written notice of all conflicts, errors, ambiguities, or discrepancies that Bidder has discovered in the Bidding Documents, and of discrepancies between Site conditions and the Contract Documents, and the written resolution thereof by Engineer is acceptable to Contractor.

10. The Bidding Documents are generally sufficient to indicate and convey understanding of all terms and conditions for performance and furnishing of the Work.

Copyright© 2018 National Society of Professional Engineers, American Council of Engineering Companies, and American Society of Civil Engineers. All rights reserved.

11. The submission of this Bid constitutes an incontrovertible representation by Bidder that without exception the Bid and all prices in the Bid are premised upon performing and furnishing the Work required by the Bidding Documents.

8.02 *Bidder's Certifications*

A. The Bidder certifies the following:

1. This Bid is genuine and not made in the interest of or on behalf of any undisclosed individual or entity and is not submitted in conformity with any collusive agreement or rules of any group, association, organization, or corporation.

2. Bidder has not directly or indirectly induced or solicited any other Bidder to submit a false or sham Bid.

3. Bidder has not solicited or induced any individual or entity to refrain from bidding.

4. Bidder has not engaged in corrupt, fraudulent, collusive, or coercive practices in competing for the Contract. For the purposes of this Paragraph 8.02.A:

a. Corrupt practice means the offering, giving, receiving, or soliciting of anything of value likely to influence the action of a public official in the bidding process.

b. Fraudulent practice means an intentional misrepresentation of facts made (a) to influence the bidding process to the detriment of Owner, (b) to establish bid prices at artificial non-competitive levels, or (c) to deprive Owner of the benefits of free and open competition.

c. Collusive practice means a scheme or arrangement between two or more Bidders, with or without the knowledge of Owner, a purpose of which is to establish bid prices at artificial, non-competitive levels.

d. Coercive practice means harming or threatening to harm, directly or indirectly, persons or their property to influence their participation in the bidding process or affect the execution of the Contract.

Copyright© 2018 National Society of Professional Engineers, American Council of Engineering Companies, and American Society of Civil Engineers. All rights reserved.

BIDDER hereby submits this Bid as set forth above:

Bidder:

_____

(typed or printed name of organization)

By: _____

(individual's signature)

Name: _____

(typed or printed)

Title: _____

(typed or printed)

Date: _____

(typed or printed)

If Bidder is a corporation, a partnership, or a joint venture, attach evidence of authority to sign.

Attest: _____

(individual's signature)

Name: _____

(typed or printed)

Title: _____

(typed or printed)

Date: _____

(typed or printed)

Address for giving notices:

_____

_____

Bidder's Contact:

Name: _____

(typed or printed)

Title: _____

(typed or printed)

Phone: _____

Email: _____

Address:

_____

_____

_____

Bidder's Contractor License No.: (if applicable) _____

Copyright© 2018 National Society of Professional Engineers, American Council of Engineering Companies, and American Society of Civil Engineers. All rights reserved.

Western Technologies Inc.

GEOTECHNICAL EVALUATION REPORT

JEROME WWTP UPGRADES
Jerome, Arizona
WT Reference No. 2522JW197

PREPARED FOR:
Pace Advanced Water Engineering
P.O. Box 4805
Scottsdale, Arizona 85261
Attn: Ms. Andrea Jaycox, Senior Project Coordinator

October 25, 2022

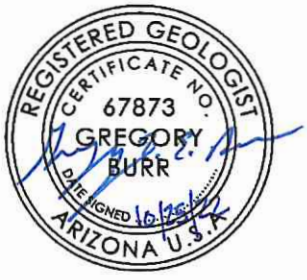

Gregory L. E. Burr, R.G., E.I.T.
Director of Geotechnical Services



Craig P. Wiedeman, P.E.
Senior Geotechnical Engineer

Western Technologies Inc.
The Quality People
Since 1955

2400 East Huntington Drive
Flagstaff, Arizona 86004-8934
(928) 774-8700 • fax 774-6469

October 25, 2022

Pace Advanced Water Engineering
P.O. Box 4805
Scottsdale, Arizona 85261

Attn: Ms. Andrea Jaycox, Senior Project Coordinator

Re: Geotechnical Evaluation
Jerome WWTP Upgrades
Jerome, Arizona

Job No. 2522JW197

Western Technologies Inc. has completed the geotechnical evaluation for the waste water treatment plant upgrades and new wastewater pipeline to be located in Jerome, Arizona. This study was performed in general accordance with our proposal number 2522PW253 dated June 15, 2022. The results of our study, including the boring/test pit location diagrams, laboratory test results, boring/test pit logs, and the geotechnical recommendations are attached.

We have appreciated being of service to you in the geotechnical engineering phase of this project and are prepared to assist you during the construction phases as well. If design conditions change, or if you have any questions concerning this report or any of our testing, inspection, design and consulting services, please do not hesitate to contact us. We look forward to working with you on future projects.

Sincerely,
WESTERN TECHNOLOGIES, INC.
Geotechnical Engineering Services

Gregory L. E. Burr, R.G., E.I.T.
Director of Geotechnical Services

Copies to: Addressee (emailed)

TABLE OF CONTENTS

1.0 PURPOSE 1

2.0 PROJECT DESCRIPTION 1

3.0 SCOPE OF SERVICES 2
3.1 Field Exploration 2
3.2 Laboratory Analyses 2
3.3 Analyses and Report 3

4.0 SITE CONDITIONS 3
4.1 Surface 3
4.2 Subsurface 4

5.0 GEOTECHNICAL PROPERTIES 4

6.0 RECOMMENDATIONS 4
6.1 General 4
6.2 Design Considerations 5
6.3 Tank Foundations 5
6.4 Manhole Foundations 6
6.5 Lateral Design Criteria for Thrust Blocks 6
6.6 Conventional Spread Footings 6
6.7 Lateral Design Criteria 7
6.8 Seismic Considerations 8
6.9 Slab-on-Grade Support 9
6.10 Drainage 10
6.11 Aggregate-Surfaced Roadways 10
6.12 Corrosivity 10

7.0 EARTHWORK 11
7.1 General 11
7.2 Site Clearing 11
7.3 Excavation 11
7.4 Tank Pad Preparation 12
7.5 Spread Footing Foundation Preparation 12
7.6 Slab-on-Grade Preparation 12
7.7 Exterior Slab Preparation 13
7.8 Materials 14
7.9 Placement and Compaction 15
7.10 Compliance 16

8.0 ADDITIONAL SERVICES 16

9.0 LIMITATIONS 17

10.0 CLOSURE 17

TABLE OF CONTENTS (Continued)

TEST PIT/BORING LOCATION DIAGRAMS..... Plates 1 and 2

APPENDIX A
Definition of Terminology..... A-1
Method of Soil Classification..... A-2
Test Pit/Boring Log Notes..... A-3
Test Pit/Boring Logs.....A-4 to A-16

APPENDIX B
Laboratory Tests.....B-1 to B-5

GEOTECHNICAL EVALUATION
JEROME WWTP UPGRADES
JEROME, ARIZONA
JOB NO. 2522JW197

1.0 PURPOSE

This report contains the results of our geotechnical evaluation for the proposed WWTP upgrades and new wastewater pipeline to be located at the existing wastewater treatment plant in Jerome, Arizona. The purpose of these services is to provide information and recommendations regarding:

- foundation design parameters
- slab-on-grade
- lateral earth pressures
- excavation conditions
- earthwork, including backfill placement, and suitability of existing soils for backfill materials
- drainage
- corrosivity
- on-site aggregate surfacing

Results of the field exploration, field tests, and laboratory testing program are presented in the Appendices.

2.0 PROJECT DESCRIPTION

Based on the revised information provided by Ms. Andrea Jaycox, Senior Project Coordinator, the proposed project will consist of approximately 2,400 linear feet of wastewater line, a new SBR Package Plant, and new primary settling and headworks tanks. The structures will be concrete and/or masonry construction with slab-on-grade floors. Maximum wall and column loads for the structures are assumed to be 3 kips per linear foot and 45 kips, respectively. The wastewater line invert elevations will be a maximum of 10 feet below the lowest existing site grades. We anticipate no extraordinary slab-on-grade criteria and that the finished structure bottom levels will be within about 2 to 3 feet of the existing site grades. In addition, approximately 2,000 linear feet of the existing access road will be resurfaced, widened, and additional pull-outs will be constructed. Should any of our information or assumptions not be correct, we request that the Client notify WT immediately.

3.0 SCOPE OF SERVICES

3.1 Field Exploration

Seven test pits and six borings were excavated/hand-auger drilled to depths of about 1 to 8 feet below the existing site grades at the approximate locations shown on the attached test pit/boring location diagrams. In addition, two samples of on-site rock were obtained for unit weight and unconfined compressive strength testing.

Logs of the test pits/borings are presented in Appendix A. Subsoils encountered during excavating/drilling were examined visually and sampled at selected depth intervals. A field log was prepared for each test pit/boring. These logs contain visual classifications of the materials encountered during excavation/drilling as well as interpolation of the subsurface conditions between samples. Final logs, included in Appendix A, represent our interpretation of the field logs and include modifications based on laboratory observations and tests of the field samples.

The final logs describe the materials encountered, their thicknesses, and the locations where samples were obtained. The Unified Soil Classification System was used to classify soils. The soil classification symbols appear on the test pit/boring logs and are briefly described in Appendix A. Local and regional geologic characteristics were used to estimate the seismic design criteria.

3.2 Laboratory Analyses

Laboratory analyses were performed on representative samples to aid in material classification and to estimate pertinent engineering properties of the on-site materials for preparation of this report. Testing was performed in general accordance with applicable ASTM and Arizona methods. The following tests were performed and the results are presented in Appendix B.

- Water content
- Dry density
- Remolded expansion potential
- Maximum density/optimum moisture
- Gradation
- Plasticity
- Soluble salts/sulfates/chlorides

- Corrosivity (ASTM A674)
- Unconfined compressive strength (rock)
- Unit weight (rock)

Test results were utilized in the development of the recommendations contained in this report.

3.3 Analyses and Report

This geotechnical engineering report includes a description of the project, a discussion of the field and laboratory testing programs, a discussion of the subsurface conditions, and design recommendations as appropriate to the purpose. The scope of services for this project does not include, either specifically or by implication, any environmental assessment of the site, discovery of underground storage tanks or other underground structures, or identification of contaminated or hazardous materials or conditions. If there is concern about the potential for such contamination, other studies should be undertaken. We are available to discuss the scope of such studies with you.

4.0 SITE CONDITIONS

4.1 Surface

At the time of our field exploration, the site was a developed wastewater treatment plant. The exteriors of existing structures appeared to be in good to fair condition. The site is bordered on the east by the existing aggregate surfaced access road to the plant, and on all other sides by northeast-southwest oriented Bitter Creek that is about 50 to 100 feet wide and 20 to 30 feet deep that directs flow to the northeast. The ground surface was relatively flat in the developed portions of the site, steep to very steep surrounding the developed areas, and contained a sparse to moderate growth of native juniper trees, bushes, cacti, grasses and weeds. Surface drainage appeared to be fair to poor with some evidence of previous surface water ponding in the developed portions of the site, and good in the undeveloped portions of the site by means of surface sheet flow to the west and north down the existing slopes into Bitter Creek.

4.2 Subsurface

As presented on the test pit/boring logs, surface and subsoils extending to the full depth of exploration at all locations explored consisted of medium to near-high plasticity Clayey SANDS with variable amounts of gravel, Clayey GRAVELS with variable amounts of sand and non-plastic Silty GRAVELS with variable amounts of sand. All soils encountered contained random amounts of limestone cobbles and boulders. Refusal to excavator/auger penetration occurred in all test pits/borings at depths of about 1 to 8 feet on LIMESTONE or limestone cobbles and boulders. Groundwater was not encountered in any test pit/boring at the time of exploration. The logs in Appendix A show details of the subsurface conditions encountered during the field exploration.

The test pit/boring logs included in this report are indicators of subsurface conditions only at the specific location and date noted. Variations from the field conditions represented by the test pits/borings may become evident during construction. If variations appear, we should be contacted to re-evaluate our recommendations.

5.0 GEOTECHNICAL PROPERTIES

Near-surface soils range from non-plastic to near-high plasticity. The site soils exhibit moderate expansion potential when recompacted, confined by loads approximating floor loads and saturated in accordance with standard Arizona test methods. Slabs-on-grade supported on recompacted native soils have a moderate potential for heaving if the water content of the soil increases. The site soils were too granular to obtain samples suitable for compression testing. Two samples of the on-site rock were obtained for unit weight and unconfined compressive strength testing and the results are present in Appendix B.

6.0 RECOMMENDATIONS

6.1 General

Recommendations contained in this report are based on our understanding of the project criteria described in Section 2.0, **PROJECT DESCRIPTION**, and the assumption that the soil and subsurface conditions are those disclosed by the test pits/borings. Others may change the plans, final elevations, number and type of structures, foundation loads, and tank bottom levels during design or construction. Substantially different subsurface conditions

from those described herein may be encountered or become known. Any changes in the project criteria or subsurface conditions shall be brought to our attention in writing.

6.2 Design Considerations

Existing fill was not encountered in the test pits/borings, but was observed on the site. We understand that no documentation is available regarding any field density testing that may have been performed during fill construction. Based on this lack of documentation and the overall condition of the fill observed, we consider the fill to be uncontrolled and recommend removal of existing fill in all structural areas.

Several of the test pits/borings indicate the presence of medium to near-high plasticity clayey soils on the site. These soils will expand or swell with an increase in moisture content. The structures and related improvements situated on expansive soils will be subject to movements if the foundation soils experience an increase in moisture content. It should be understood that if moisture penetrates expansive soils, there will likely be heave and possible resultant cracking/distress of the proposed structures and related improvements. It should be noted that shallow foundation systems are not designed to resist soil movements resulting from sewer or plumbing leaks, excessive or leaking irrigation systems, poor drainage, or water ponding near the structures. Construction of site fences, screen walls and other miscellaneous improvements such as exterior slabs-on-grade that typically fall under building code guidelines will be susceptible to heave as well.

Cobbles and boulders were encountered in the test pits/borings. These oversized materials, greater than 3 inches, could present construction difficulties for foundation, utility trenches and other excavations. In cut areas and excavations, exposed oversized materials should be removed.

6.3 Tank Foundations

Above-ground tanks may be supported on compacted aggregate underlain by a minimum thickness of 1 foot of site soils removed and replaced with properly compacted, imported engineered fill material. Below-ground tanks may be supported on scarified and recompacted native soils. Any existing fill should be removed in all proposed tank areas. The tank pads, prepared as recommended in the **EARTHWORK** section of the report, will be suitable to support a maximum dead plus live-load pressure of up to 3000 pounds per square foot. We anticipate that total and differential movements of the proposed above-ground tank structures, supported as recommended, should be within tolerable limits of

the tank manufacturer, typically uniform settlement of less than 2 inches and differential settlement less than 0.5-inch per 32 feet of circumference. Total and differential movements of the proposed below-ground tank structures, supported as recommended, are anticipated to be 1 inch and 3/4 inch, respectively. Additional foundation movements could occur if water from any source infiltrates the foundation soils. Therefore, proper drainage should be provided in the final design and during construction.

We recommend that the geotechnical engineer or his representative observe the tank pad preparation. It should be determined whether the materials exposed are similar to those anticipated for support of the tanks. Any soft, loose or unacceptable materials should be undercut to suitable materials and backfilled with engineered fill material.

6.4 Manhole Foundations

The soils encountered along the alignment are expected to have moderate to high bearing capacity at anticipated manhole foundation depths. Other than removal of any soft, loose, unstable or disturbed materials from beneath manhole foundations, specialized treatment of soils beneath manholes is not anticipated.

6.5 Lateral Design Criteria for Thrust Blocks

For any thrust block design, lateral loads may be resisted using a soil bearing pressure of 2500 pounds per square foot (psf). All fill against or around thrust blocks should be compacted to densities specified herein under **Placement and Compaction**.

6.6 Conventional Spread Footings

If conventional spread footings are used, they should be underlain by a minimum thickness of 1 foot of lean mix (2-sack) concrete backfill. Footings should bear at least 2 feet below the lowest adjacent finished grade. Footings may be designed to impose a maximum dead plus live-load pressure of up to 2500 pounds per square foot.

We anticipate that total movement of the proposed structures, supported as recommended, should be less than 1 inch. Differential movement should be less than ¾ inch. Additional foundation movements could occur if water from any source infiltrates the foundation soils. Therefore, proper drainage should be provided in the final design and during construction.

Finished grade is the lowest adjacent grade for perimeter footings and floor level for interior footings. The design bearing capacity applies to dead loads plus design live load conditions. Recommended minimum widths of column and wall footings are 24 inches and 16 inches, respectively. The bearing value given is a net bearing value and the weight of the concrete in the footings may be ignored.

All footings, stem walls and masonry walls should be reinforced to reduce the potential for distress caused by differential foundation movements. The use of joints at openings or other discontinuities in masonry walls is recommended.

We recommend that the geotechnical engineer or his representative observe the footing excavations before reinforcing steel and concrete are placed. It should be determined whether the soils exposed are similar to those anticipated for support of the footings. Any soft, loose or unacceptable soils should be undercut to suitable materials and backfilled with either lean mix or structural concrete.

6.7 Lateral Design Criteria

For retaining walls located above any free water surface with no surcharge loads, recommended equivalent fluid pressures and coefficients of base friction for unrestrained elements are:

- Active:
  Undisturbed subsoil .....38 psf/ft
  Compacted granular backfill .....30 psf/ft
  Compacted on-site soils (low expansive potential) .....38 psf/ft
  Clayey site soils ..... not recommended for use

- Passive:
  Shallow wall footings .....220 psf/ft
  Shallow column footings.....350 psf/ft
  Dense rock .....500 psf/ft

- Coefficient of base friction
  Soil.....0.35*
  Rock.....0.55

* The coefficient of base friction (soil) should be reduced to 0.25 when used in conjunction with passive pressure.

Where the design includes restrained elements, the following equivalent fluid pressures are recommended:

- At-rest:
  Undisturbed subsoil .....64 psf/ft
  Compacted granular backfill .....55 psf/ft

These lateral earth pressures are not applicable for submerged soils. We should be consulted for additional recommendations if such conditions are to be included in the design. Any surcharge from adjacent loadings must also be considered. Walls below grade should be waterproofed.

We recommend a free-draining soil layer or manufactured geocomposite material, be constructed adjacent to the back of the retaining wall. A filter may be required between the soil backfill and drainage layer. This drainage zone should help prevent hydrostatic pressure buildup. This vertical drain should be tied into a gravity drainage system at the base of the retaining wall. It is important that all backfill be properly placed and compacted. Backfill should be mechanically compacted in layers. Flooding or jetting should not be permitted. Care should be taken not to damage the walls when placing the backfill. Backfills should be inspected and tested during placement.

Fill against footings, stem walls and retaining walls should be compacted to densities specified in **EARTHWORK**. Medium to high plasticity clay soils should not be used as backfill against retaining walls. Compaction of each lift adjacent to walls should be accomplished with hand-operated tampers or other lightweight compactors. Overcompaction may cause excessive lateral earth pressures which could result in wall movements.

6.8 Seismic Considerations

Structures should be designed in accordance with applicable building codes. The seismic design parameters presented in the following table, in accordance with the 2018 International Building Code and ASCE 7-16, are applicable to the project site:

Seismic Design Parameters International Building Code 2018, ASCE 7-16	
Soil Site Class	C
Mapped Spectral Response Acceleration at 0.2 sec period (S_s)	0.31g
Mapped Spectral Response Acceleration at 1.0 sec period (S_1)	0.097g
Site Coefficient for 0.2 sec period (F_a)	1.3
Site Coefficient for 1.0 sec period (F_v)	1.5
Design Spectral Response Acceleration at 0.2 sec period (S_{DS})	0.269g
Design Spectral Response Acceleration at 1.0 sec period (S_{D1})	0.097g

The soil site class is based upon conditions identified in shallow exploratory test pits/borings and local knowledge of the geotechnical conditions in the vicinity of the site. Conditions extending beyond the depth of our test pits/borings to a depth of 100 feet were assumed for the purposes of providing the information presented in the table. Based upon the density of the on-site soils and lack of groundwater, the potential settlement and lateral spread due to liquefaction is not a considered to be a significant concern on the site.

6.9 Slab-on-Grade Support

Slabs-on-grade should be supported on a minimum thickness of 1 foot of properly placed and compacted, imported, low expansive, engineered fill. For design of interior slabs-on-grade, we recommend using a modulus of subgrade reaction (k) of 200 pounds per cubic inch (pci) for the on-site soils and 225 pci for imported fill material, based on a 30-inch diameter plate. The slab subgrade should be prepared by the procedures outlined in this report. A minimum 4-inch thick layer of base course should be provided beneath all slabs to help prevent capillary rise and a damp slab.

All concrete placement and curing operations should follow the American Concrete Institute manual recommendations. Improper curing techniques and/or high slump (water-cement ratio) could cause excessive shrinkage, cracking or curling. The plastic properties of the concrete should be documented at the time of placement and specimens should also be prepared for strength testing to verify compliance with project specifications. Concrete slabs should be allowed to cure adequately before placing vinyl or other moisture sensitive floor covering.

6.10 Drainage

The major cause of soil-related foundation and slab-on-ground problems is moisture increase in soils below structures. Properly functioning conventional foundations and floor slabs-on-ground require appropriately constructed and maintained site drainage conditions. Therefore, it is extremely important that positive drainage be provided during construction and maintained throughout the life of the structures. It is also important that proper planning and control of any landscape and irrigation practices be performed.

Infiltration of water into utility or foundation excavations must be prevented during construction. Backfill against footings, exterior walls, and in utility line trenches should be well compacted and free of all construction debris to minimize the possibility of moisture infiltration. If utility line trenches are backfilled with a granular material, then a clay or concrete plug should be placed in the trench adjacent to the structure to prevent water from following the trench back under the structure.

6.11 Aggregate-Surfaced Roadways

For unpaved sections, we recommend an initial minimum thickness of 6 inches of granular cover material. As with any unbound vehicular section, additional material will be required over time as cover material is lost due to grading, snow plowing, lateral shoving, and intrusion of the cover material into the underlying subgrade soils. To help reduce intrusion, consideration should be given to the use of a geotextile separator fabric placed at the cover material/subgrade soil interface.

6.12 Corrosivity

Based on the laboratory test results, the on-site soils exhibit a low to moderate corrosive potential to ductile iron piping. This information should be used as an aid in choosing the construction materials that will be in contact with these soils and that will need to be resistant to various corrosive forces. Manufacturers' representatives should be contacted regarding the specific corrosivity resistance for their particular product.

The chemical test results indicate that the soils at the site classify as moderately corrosive to concrete, Class S1 in accordance with ACI 318, Table 4.2.1. Concrete should be made with a cement that provides sulfate resistance and that has a maximum water-cementitious materials ratio and minimum compressive strength set forth in the provisions of ACI 318, Section 4.3.

7.0 EARTHWORK

7.1 General

The conclusions contained in this report for the proposed construction are contingent upon compliance with recommendations presented in this section. Any excavating, trenching, or disturbance which occurs after completion of the earthwork must be backfilled, compacted and tested in accordance with the recommendations contained herein. It is not reasonable to rely upon our conclusions and recommendations if any future unobserved and untested trenching, grading or backfilling occurs.

Although underground facilities were not observed, such features might be encountered during construction. These features should be demolished and removed in accordance with the recommendations of the geotechnical engineer. Any loose or disturbed soils resulting from demolition and/or removal of existing facilities should also be removed and/or recompacted as engineered fill, and any excavations should be backfilled in accordance with recommendations presented herein.

7.2 Site Clearing

Strip and remove all existing fill, remaining vegetation, debris, aggregate surfacing and/or concrete pavement and any other deleterious materials from the building, tank and wastewater line area. The building/tank area is defined as that area within the structure footprint plus 5 feet beyond the perimeter of the footprint. All exposed surfaces should be free of mounds and depressions which could prevent uniform compaction.

7.3 Excavation

We anticipate that excavations into the shallow site soils for the proposed construction can be accomplished with conventional equipment. Excavations penetrating the underlying limestone will require the use of heavy-duty, specialized equipment, likely together with large pneumatic hammers, to facilitate rock break-up and removal.

Cut slopes into the shallow on-site soils should be constructed no steeper than 1:1 (horizontal:vertical) and 0.5:1 (horizontal:vertical) in the limestone bedrock. Fill slopes should be constructed no steeper than 1.5:1 (horizontal:vertical) to limit erosion, and to provide slope protection. Natural slopes exceeding a 5:1 (horizontal:vertical) slope

configuration, should be benched prior to fill placement. Natural slopes which will support fill embankments should be benched at a maximum 5:1 slope.

On-site soils will pump or become unworkable at high water contents. Workability may be improved by scarifying and drying. Overexcavation of wet zones and replacement with drier granular materials may be necessary. The use of lightweight excavation and compaction equipment may be required to minimize subgrade pumping.

7.4 Tank Pad Preparation

Following removal of any existing fill material, above-ground tanks should be founded on a minimum thickness of 1 foot of imported, properly compacted, low expansive, engineered fill material. Remove existing soils to a minimum depth of 1 foot below the bottom of the above-ground tank elevation. Following the removal, and immediately below all below-grade tanks, scarify, moisten or dry as required, and compact all subgrade soils to a minimum depth of 8 inches. The subgrade preparation should be accomplished in a manner which will result in uniform water contents and densities after compaction. In areas where dense limestone is encountered, scarification and recompaction is not required.

7.5 Spread Footing Foundation Preparation

Following removal of any existing fill material in footing areas, remove existing soils to a minimum depth of 1 foot below the bottom of the footing. Removal may extend straight down along the sides of the footing. Replace the removed soils with properly consolidated, lean mix (2-sack) concrete backfill material.

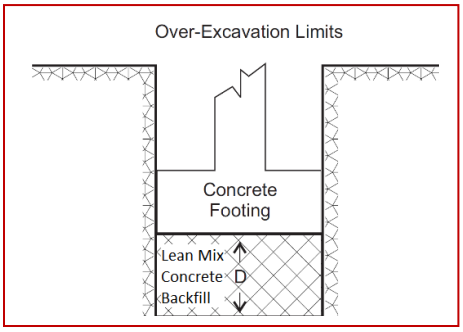

7.6 Slab-on-Grade Preparation

Following removal of any existing fill material, slabs-on-grade should be founded on a minimum thickness of 1 foot of imported, low expansive, engineered fill material. Remove native soils, as necessary, to a minimum depth of 1 foot below the bottom of the slab (depth D in the diagram below). Following the removal, scarify, moisten or dry as required, and compact all subgrade soils to a minimum depth of 8 inches. Replace the removed soils with properly compacted, imported, low to non-expansive, engineered fill material. The

aggregate base course below the slab may be included as part of the low to non-expansive engineered fill. In areas where dense limestone is encountered, scarification and recompaction is not required.

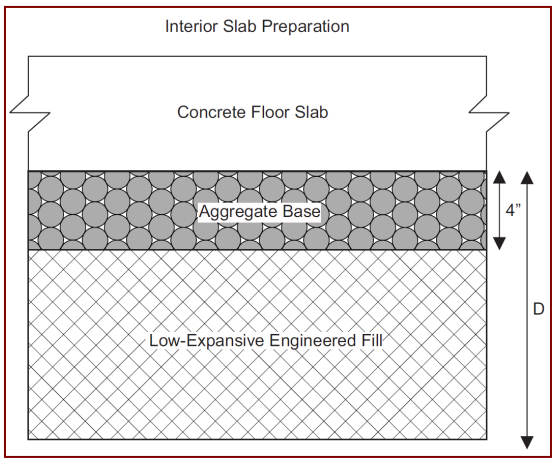

The subgrade preparation should be accomplished in a manner that will result in uniform water contents and densities after compaction.

7.7 Exterior Slab Preparation

The soils on this site have the potential to expand and shrink with changes in moisture content. In addition, frost penetration in the upper soils may cause surface heaving. Therefore, relatively lightweight exterior concrete flatwork such as sidewalks and patios may experience movements resulting in cracking or vertical offsets. To reduce the potential for damage, we recommend:

- Use of fill with low expansion potential
- Use of fill with low to negligible frost susceptibility
- Placement of effective control joints on relatively close centers
- Moisture-density control during placement of subbase fills
- Provision for adequate drainage in areas adjoining the slabs
- Use of designs which allow vertical movement between the exterior slabs and adjoining structural elements

It should be understood that these recommendations will help reduce the potential for soil movement and resulting distress, but will not eliminate this potential. Furthermore, the use of municipal specifications and details may not mitigate the potential for movements of the expansive or frost susceptible on-site soils.

7.8 Materials

a. Clean on-site native soils with a maximum dimension of 6 inches or imported materials may be used as fill material for the following:

- backfill (non-slab areas)
- Subbase fill in aggregate surfaced roadway areas

b. On-site clayey soils should not be used as subbase fill or backfill below any tanks, foundations, slabs-on-grade or behind any retaining walls. Imported soils with low expansive potential should be used in these areas.

c. Frozen soils should not be used as fill or backfill.

d. Lean mix (2-sack) concrete backfill should consist of aggregate base course type material combined with 2 sacks of cement per cubic yard. A coarse rock mix should not be used.

e. Imported soils should conform to the following:

- Gradation (ASTM C136): percent finer by weight

6"	100
4"	85-100
¾"	70-100
No. 4 Sieve	50-100
No. 200 Sieve	40 (max)

- Maximum expansive potential (%)[1] 1.5

- Maximum soluble sulfates (%) 0.10

f. Base course should conform to current Yavapai County specifications.

[1] Measured on a sample compacted to approximately 95 percent of the ASTM D698 maximum dry density at about 3 percent below optimum water content. The sample is confined under a 100 psf surcharge and submerged.

7.9 Placement and Compaction

a. Place and compact fill in horizontal lifts, using equipment and procedures that will produce recommended water contents and densities throughout the lift.

b. Uncompacted fill lifts should not exceed 8 inches.

c. Materials should be compacted to the following:

Material	Minimum Percent Compaction (ASTM D698)
• On-site soil, reworked:	
Below tanks	95
Below slabs-on-grade	90
Aggregate surfaced roadway areas	95
• On-site clayey soils, fill:	
Aggregate surfaced roadway areas	95
Landscape areas	85
• On-site low expansive potential soils, fill:	
Aggregate surfaced roadway areas	95
Below slabs-on-grade	95
Below tanks	95
• Imported soil, fill:	
Below slabs-on-grade	95
Below tanks	95
Aggregate surfaced roadway areas	95
• Aggregate base:	
Below slabs-on-grade	95
Below tanks	95
Aggregate surfaced roadway areas	100

Material	Minimum Percent Compaction (ASTM D698)
• Backfill:	
Structural	95
Nonstructural	90

`

d. On-site soils should be compacted with a moisture content in the range of 1 percent below to 3 percent above optimum. Imported soils with low expansive potential and aggregate base course materials should be compacted with a moisture content in the range of 3 percent below to 3 percent above optimum.

7.10 Compliance

Recommendations for structural elements supported on compacted fills or prepared subgrade depend upon compliance with **EARTHWORK** recommendations. To assess compliance, observation and testing should be performed under the direction of a geotechnical engineer.

8.0 ADDITIONAL SERVICES

The recommendations provided in this report are based on the assumption that a sufficient schedule of tests and observations will be performed during construction to verify compliance. At a minimum, these tests and observations should be comprised of the following:

- Observations and testing during site preparation and earthwork;
- Observation of foundation excavations; and
- Consultation as may be required during construction.

Retaining the geotechnical engineer who developed your report to provide construction observation is the best way to verify compliance, and to help you manage the risks associated with unanticipated conditions.

9.0 LIMITATIONS

This report has been prepared assuming the project criteria described in Section 2.0. If changes in the project criteria occur, or if different subsurface conditions are encountered or become known, the conclusions and recommendations presented herein shall become invalid. In any such event, WT should be contacted in order to assess the effect that such variations may have on our conclusions and recommendations.

The recommendations presented are based entirely upon data derived from a limited number of samples obtained from widely spaced test pits/borings. The attached logs are indicators of subsurface conditions only at the specific locations and times noted. This report assumes the uniformity of the geology and soil structure between test pits/borings, however variations can and often do exist. Whenever any deviation, difference or change is encountered or becomes known, WT should be contacted.

This report is for the exclusive benefit of our client alone. There are no intended third-party beneficiaries of our contract with the client or this report, and nothing contained in the contract or this report shall create any express or implied contractual or any other relationship with, or claim or cause of action for, any third party against WT.

This report is valid for the earlier of one year from the date of issuance, a change in circumstances, or discovered variations. After expiration, no person or entity shall rely on this report without the express written authorization of WT.

10.0 CLOSURE

We prepared this report as an aid to the designers of the proposed project. The comments, statements, recommendations and conclusions set forth in this report reflect the opinions of the authors. These opinions are based upon data obtained at the location of the test pits/borings, and from laboratory tests. Work on your project was performed in accordance with generally accepted standards and practices utilized by professionals providing similar services in this locality. No other warranty, express or implied, is made.

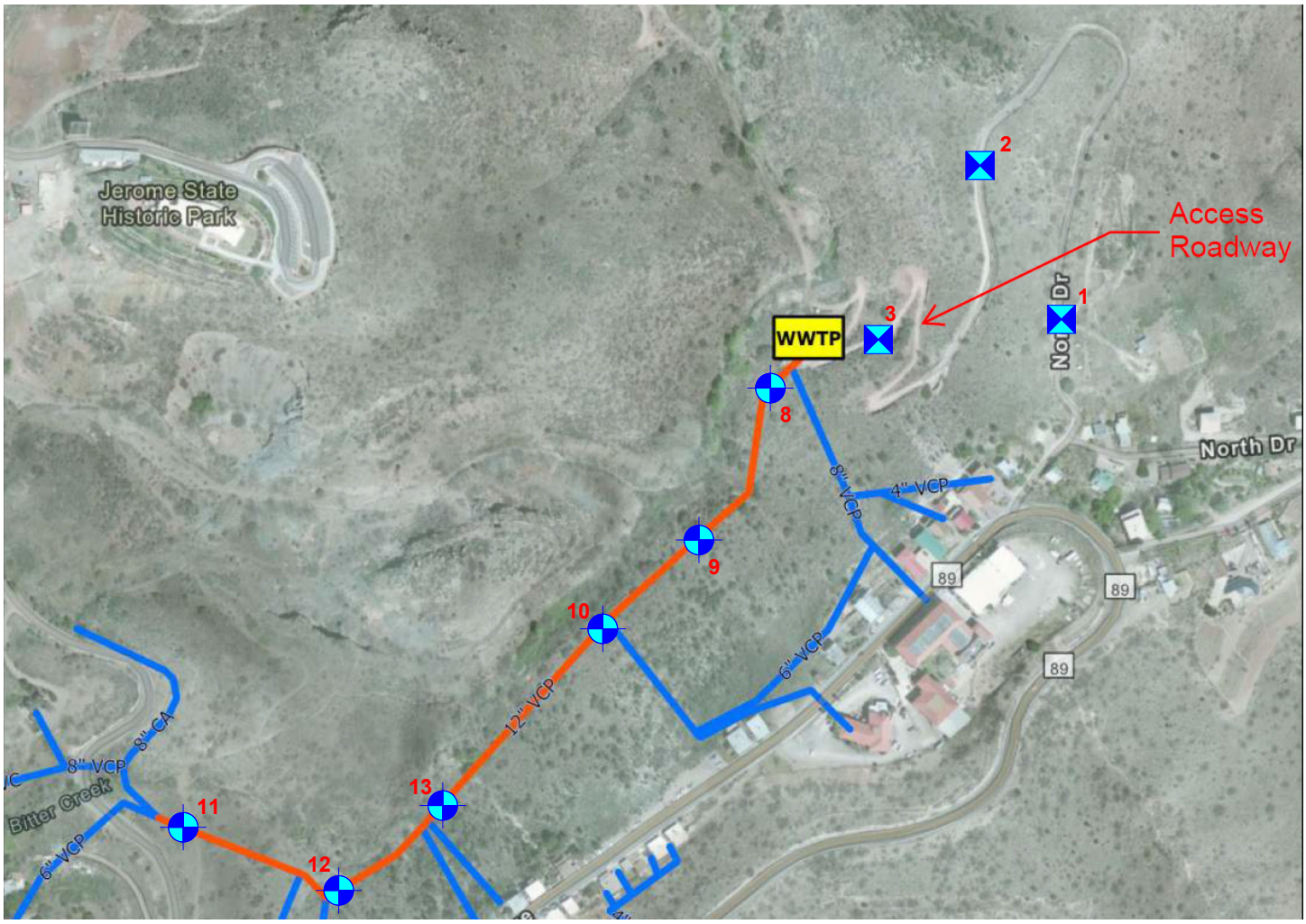

Not to Scale

Approximate Hand Auger Boring Location

Approximate Test Pit Location

JEROME WWTP UPGRADES	
Boring/Test Pit Location Diagram	
Western Technologies Inc.	
Job No.: 2522JW197	Plate: 1

Geotechnical Environmental Inspections Materials

Western Technologies Inc.
The Quality People
Since 1955

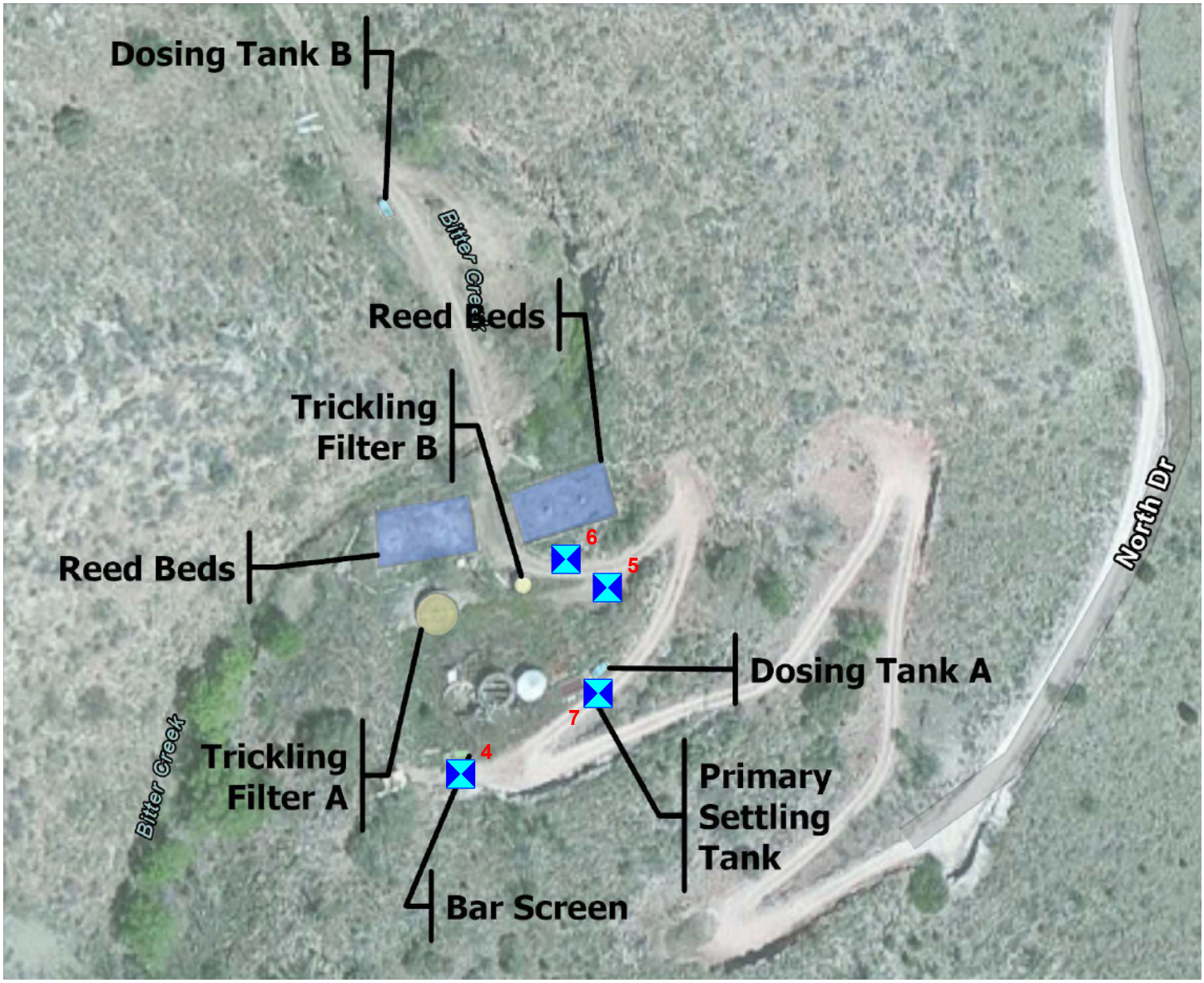

Not to Scale

Approximate Test Pit Location

JEROME WWTP UPGRADES	
Test Pit Location Diagram	
Western Technologies Inc.	
Job No.: 2522JW197	Plate: 2

Geotechnical Environmental Inspections Materials

Western Technologies Inc. The Quality People Since 1955

Allowable Soil Bearing Capacity	The recommended maximum contact stress developed at the interface of the foundation element and the supporting material.
Backfill	A specified material placed and compacted in a confined area.
Base Course	A layer of specified aggregate material placed on a subgrade or subbase.
Base Course Grade	Top of base course.
Bench	A horizontal surface in a sloped deposit.
Caisson/Drilled Shaft	A concrete foundation element cast in a circular excavation which may have an enlarged base (or belled caisson).
Concrete Slabs-On-Grade	A concrete surface layer cast directly upon base course, subbase or subgrade.
Crushed Rock Base Course	A base course composed of crushed rock of a specified gradation.
Differential Settlement	Unequal settlement between or within foundation elements of a structure.
Engineered Fill	Specified soil or aggregate material placed and compacted to specified density and/or moisture conditions under observations of a representative of a soil engineer.
Existing Fill	Materials deposited through the action of man prior to exploration of the site.
Existing Grade	The ground surface at the time of field exploration.
Expansive Potential	The potential of a soil to expand (increase in volume) due to absorption of moisture.
Fill	Materials deposited by the actions of man.
Finished Grade	The final grade created as a part of the project.
Gravel Base Course	A base course composed of naturally occurring gravel with a specified gradation.
Heave	Upward movement.
Native Grade	The naturally occurring ground surface.
Native Soil	Naturally occurring on-site soil.
Rock	A natural aggregate of mineral grains connected by strong and permanent cohesive forces. Usually requires drilling, wedging, blasting or other methods of extraordinary force for excavation.
Sand and Gravel Base Course	A base course of sand and gravel of a specified gradation.
Sand Base Course	A base course composed primarily of sand of a specified gradation.
Scarify	To mechanically loosen soil or break down existing soil structure.
Settlement	Downward movement.
Soil	Any unconsolidated material composed of discrete solid particles, derived from the physical and/or chemical disintegration of vegetable or mineral matter, which can be separated by gentle mechanical means such as agitation in water.
Strip	To remove from present location.
Subbase	A layer of specified material placed to form a layer between the subgrade and base course.
Subbase Grade	Top of subbase.
Subgrade	Prepared native soil surface.

©81WTI
091614

COARSE-GRAINED SOILS

LESS THAN 50% FINES

GROUP SYMBOLS	DESCRIPTION	MAJOR DIVISIONS
GW	WELL-GRADED GRAVEL OR WELL-GRADED GRAVEL WITH SAND, LESS THAN 5% FINES	GRAVELS MORE THAN HALF OF COARSE FRACTION IS LARGER THAN NO. 4 SIEVE SIZE
GP	POORLY-GRADED GRAVEL OR POORLY-GRADED GRAVEL WITH SAND, LESS THAN 5% FINES	
GM	SILTY GRAVEL OR SILTY GRAVEL WITH SAND, MORE THAN 12% FINES	
GC	CLAYEY GRAVEL OR CLAYEY GRAVEL WITH SAND, MORE THAN 12% FINES	
SW	WELL-GRADED SAND OR WELL-GRADED SAND WITH GRAVEL, LESS THAN 5% FINES	SANDS MORE THAN HALF OF COARSE FRACTION IS SMALLER THAN NO. 4 SIEVE SIZE
SP	POORLY-GRADED SAND OR POORLY-GRADED SAND WITH GRAVEL, LESS THAN 5% FINES	
SM	SILTY SAND OR SILTY SAND WITH GRAVEL, MORE THAN 12% FINES	
SC	CLAYEY SAND OR CLAYEY SAND WITH GRAVEL, MORE THAN 12% FINES	

NOTE: Coarse-grained soils receive dual symbols if they contain 5% to 12% fines (e.g., SW-SM, GP-GC).

FINE-GRAINED SOILS

MORE THAN 50% FINES

GROUP SYMBOLS	DESCRIPTION	MAJOR DIVISIONS
ML	SILT, SILT WITH SAND OR GRAVEL, SANDY SILT, OR GRAVELLY SILT	SILTS AND CLAYS LIQUID LIMIT LESS THAN 50
CL	LEAN CLAY OF LOW TO MEDIUM PLASTICITY, SANDY CLAY, OR GRAVELLY CLAY	
OL	ORGANIC SILT OR ORGANIC CLAY OF LOW TO MEDIUM PLASTICITY	
MH	ELASTIC SILT, SANDY ELASTIC SILT, OR GRAVELLY ELASTIC SILT	SILTS AND CLAYS LIQUID LIMIT MORE THAN 50
CH	FAT CLAY OF HIGH PLASTICITY, SANDY FAT CLAY, OR GRAVELLY FAT CLAY	
OH	ORGANIC SILT OR ORGANIC CLAY OF HIGH PLASTICITY	
PT	PEAT AND OTHER HIGHLY ORGANIC SOILS	HIGHLY ORGANIC SOILS

NOTE: Fine-grained soils may receive dual classification based upon plasticity characteristics (e.g. CL-ML).

SOIL SIZES

COMPONENT	SIZE RANGE
BOULDERS	Above 12 in.
COBBLES	3 in. – 12 in.
GRAVEL	No. 4 – 3 in.
Coarse	¾ in. – 3 in.
Fine	No. 4 – ¾ in.
SAND	No. 200 – No. 4
Coarse	No. 10 – No. 4
Medium	No. 40 – No. 10
Fine	No. 200 – No. 40
Fines (Silt or Clay)	Below No. 200

NOTE: Only sizes smaller than three inches are used to classify soils

CONSISTENCY

CLAYS & SILTS	BLOWS PER FOOT
VERY SOFT	0 – 2
SOFT	3 – 4
FIRM	5 – 8
STIFF	9 – 15
VERY STIFF	16 – 30
HARD	OVER 30

RELATIVE DENSITY

SANDS & GRAVELS	BLOWS PER FOOT
VERY LOOSE	0 – 4
LOOSE	5 – 10
MEDIUM DENSE	11 – 30
DENSE	31 – 50
VERY DENSE	OVER 50

NOTE: Number of blows using 140-pound hammer falling 30 inches to drive a 2-inch-OD (1⅜-inch ID) split-barrel sampler (ASTM D1586).

PLASTICITY OF FINE GRAINED SOILS

PLASTICITY INDEX	TERM
0	NON-PLASTIC
1 – 7	LOW
8 – 20	MEDIUM
Over 20	HIGH

DEFINITION OF WATER CONTENT

DRY
SLIGHTLY DAMP
DAMP
MOIST
WET
SATURATED

©81 WTI
090414

The number shown in **"BORING NO."** or "**TEST PIT NO.**" refers to the approximate location of the same number indicated on the "Boring/Test Pit Location Diagram" as positioned in the field by pacing or measurement from property lines and/or existing features.

"DRILLING TYPE" refers to the exploratory equipment used in the boring. Hand auger methods were used. The dimension presented is the outside diameter of the auger used.

"EQUIPMENT TYPE" refers to the equipment used in the excavation of the test pit, and may include the width of the bucket on the excavator and the use of "rock" teeth or attachments.

"SAMPLE TYPE" refers to the form of sample recovery, in which **R** = Ring-lined sample, **G** = Grab sample.

"DRY DENSITY (LBS/CU FT)" refers to the laboratory-determined dry density in pounds per cubic foot. The symbol **"NR"** indicates that no sample was recovered.

"WATER (MOISTURE) CONTENT (% OF DRY WT.)" refers to the laboratory-determined water content in percent using the standard test method ASTM D2216.

"USCS" refers to the "Unified Soil Classification System" Group Symbol for the soil type as defined by ASTM D2487 and D2488. The soils were classified visually in the field, and where appropriate, classifications were modified by visual examination of samples in the laboratory and/or by appropriate tests.

These notes and boring/test pit logs are intended for use in conjunction with the purposes of our services defined in the text. Boring/test pit log data should not be construed as part of the construction plans nor as defining construction conditions.

Boring/test pit logs depict our interpretations of subsurface conditions at the locations and on the date(s) noted. Variations in subsurface conditions and characteristics may occur between borings/test pits. Groundwater levels may fluctuate due to seasonal variations and other factors.

The stratification lines shown on the boring/test pit logs represent our interpretation of the approximate boundary between soil or rock types based upon visual field classification at the boring/test pit location. The transition between materials is approximate and may be more or less gradual than indicated.

©81WTI
091614

DATE EXCAVATED: **9-16-22**
LOCATION: **See Location Diagram**
ELEVATION: **Not Determined**

TEST PIT NO. 1

EQUIPMENT: **CASE 580N**
EXCAVATION TYPE: **24" BUCKET**
FIELD ENGINEER: **C. Bartlett**

MOISTURE CONTENT (% OF DRY WT.)	DRY DENSITY (LBS/CU FT)	SAMPLE TYPE	SAMPLE	BLOWS/FT.	DEPTH (FEET)	USCS	GRAPHIC	SOIL DESCRIPTION
		G				GM		AGGREGATE BASE COURSE (3 Inches Thick) Silty GRAVEL; with sand, cobbles and boulders, tan, slightly damp
					5			**Excavation Stopped at 5 Feet**
					10			

N- **STANDARD PENETRATION TEST**
R- **RING SAMPLE**
C- **CORE: %RECOVERY/RQD**
G- **GRAB SAMPLE**
B- **BUCKET SAMPLE**

NOTES: **Groundwater Not Encountered**

THIS SUMMARY APPLIES ONLY AT THIS LOCATION AND AT THE TIME OF LOGGING. CONDITIONS MAY DIFFER AT OTHER LOCATIONS AND MAY CHANGE AT THIS LOCATION WITH TIME. DATA PRESENTED IS A SIMPLIFICATION.

Geotechnical Environmental Inspections Materials

Western Technologies Inc.
The Quality People
Since 1955

PROJECT: **JEROME WWTP IMPROVEMENTS**
PROJECT NO.: **2522JW197**

PLATE **A-4**

TEST PIT LOG

DATE EXCAVATED: **9-16-22**
LOCATION: **See Location Diagram**
ELEVATION: **Not Determined**

TEST PIT NO. 2

EQUIPMENT: **CASE 580N**
EXCAVATION TYPE: **24" BUCKET**
FIELD ENGINEER: **C. Bartlett**

MOISTURE CONTENT (% OF DRY WT.)	DRY DENSITY (LBS/CU FT)	SAMPLE TYPE	SAMPLE	BLOWS/FT.	DEPTH (FEET)	USCS	GRAPHIC	SOIL DESCRIPTION
		G				SC		Clayey SAND; with gravel, cobbles and boulders, tan, slightly damp
4.4	87	R		Push				
					5			**Excavation Stopped at 5 Feet**
					10			

N- **STANDARD PENETRATION TEST**
R- **RING SAMPLE**
C- **CORE: %RECOVERY/RQD**
G- **GRAB SAMPLE**
B- **BUCKET SAMPLE**

NOTES: **Groundwater Not Encountered**

THIS SUMMARY APPLIES ONLY AT THIS LOCATION AND AT THE TIME OF LOGGING. CONDITIONS MAY DIFFER AT OTHER LOCATIONS AND MAY CHANGE AT THIS LOCATION WITH TIME. DATA PRESENTED IS A SIMPLIFICATION.

Geotechnical Environmental Inspections Materials

Western Technologies Inc.
The Quality People
Since 1955

PROJECT: **JEROME WWTP IMPROVEMENTS**
PROJECT NO.: **2522JW197**

PLATE **A-5**

TEST PIT LOG

DATE EXCAVATED: **9-16-22**
LOCATION: **See Location Diagram**
ELEVATION: **Not Determined**

TEST PIT NO. 3

EQUIPMENT: **CASE 580N**
EXCAVATION TYPE: **24" BUCKET**
FIELD ENGINEER: **C. Bartlett**

MOISTURE CONTENT (% OF DRY WT.)	DRY DENSITY (LBS/CU FT)	SAMPLE TYPE	SAMPLE	BLOWS/FT.	DEPTH (FEET)	USCS	GRAPHIC	SOIL DESCRIPTION
		G				GC		Clayey GRAVEL; with sand, cobbles and boulders, tan, slightly damp
3.4	99	R		Push				
					5			**Excavation Stopped at 5 Feet**
					10			

N- **STANDARD PENETRATION TEST**
R- **RING SAMPLE**
C- **CORE: %RECOVERY/RQD**
G- **GRAB SAMPLE**
B- **BUCKET SAMPLE**

NOTES: **Groundwater Not Encountered**

THIS SUMMARY APPLIES ONLY AT THIS LOCATION AND AT THE TIME OF LOGGING. CONDITIONS MAY DIFFER AT OTHER LOCATIONS AND MAY CHANGE AT THIS LOCATION WITH TIME. DATA PRESENTED IS A SIMPLIFICATION.

Geotechnical Environmental Inspections Materials

Western Technologies Inc.
The Quality People
Since 1955

PROJECT: **JEROME WWTP IMPROVEMENTS**
PROJECT NO.: **2522JW197**

PLATE **A-6**

TEST PIT LOG

DATE EXCAVATED: **9-16-22**
LOCATION: **See Location Diagram**
ELEVATION: **Not Determined**

TEST PIT NO. 4

EQUIPMENT: **CASE 580N**
EXCAVATION TYPE: **24" BUCKET**
FIELD ENGINEER: **C. Bartlett**

MOISTURE CONTENT (% OF DRY WT.)	DRY DENSITY (LBS/CU FT)	SAMPLE TYPE	SAMPLE	BLOWS/FT.	DEPTH (FEET)	USCS	GRAPHIC	SOIL DESCRIPTION
		G				GC		Clayey GRAVEL; with sand, cobbles and boulders, light brown, slightly damp
					5			**Excavator Refusal at 3 Feet on LIMESTONE**
					10			

N- **STANDARD PENETRATION TEST**
R- **RING SAMPLE**
C- **CORE: %RECOVERY/RQD**
G- **GRAB SAMPLE**
B- **BUCKET SAMPLE**

NOTES: **Groundwater Not Encountered**

THIS SUMMARY APPLIES ONLY AT THIS LOCATION AND AT THE TIME OF LOGGING. CONDITIONS MAY DIFFER AT OTHER LOCATIONS AND MAY CHANGE AT THIS LOCATION WITH TIME. DATA PRESENTED IS A SIMPLIFICATION.

Geotechnical Environmental Inspections Materials

Western Technologies Inc.
The Quality People
Since 1955

PROJECT: **JEROME WWTP IMPROVEMENTS**
PROJECT NO.: **2522JW197**

PLATE **A-7**

TEST PIT LOG

DATE EXCAVATED: **9-16-22**
LOCATION: **See Location Diagram**
ELEVATION: **Not Determined**

TEST PIT NO. 5

EQUIPMENT: **CASE 580N**
EXCAVATION TYPE: **24" BUCKET**
FIELD ENGINEER: **C. Bartlett**

MOISTURE CONTENT (% OF DRY WT.)	DRY DENSITY (LBS/CU FT)	SAMPLE TYPE	SAMPLE	BLOWS/FT.	DEPTH (FEET)	USCS	GRAPHIC	SOIL DESCRIPTION
		G			0	GC		Clayey GRAVEL; with sand, cobbles and boulders, brown, damp
					5			
					8			**Excavator Refusal at 8 Feet on LIMESTONE**
					10			

N- **STANDARD PENETRATION TEST**
R- **RING SAMPLE**
C- **CORE: %RECOVERY/RQD**
G- **GRAB SAMPLE**
B- **BUCKET SAMPLE**

NOTES: **Groundwater Not Encountered**

THIS SUMMARY APPLIES ONLY AT THIS LOCATION AND AT THE TIME OF LOGGING. CONDITIONS MAY DIFFER AT OTHER LOCATIONS AND MAY CHANGE AT THIS LOCATION WITH TIME. DATA PRESENTED IS A SIMPLIFICATION.

Geotechnical Environmental Inspections Materials

Western Technologies Inc.
The Quality People
Since 1955

PROJECT: **JEROME WWTP IMPROVEMENTS**
PROJECT NO.: **2522JW197**

PLATE **A-8**

TEST PIT LOG

DATE EXCAVATED: **9-16-22**
LOCATION: **See Location Diagram**
ELEVATION: **Not Determined**

TEST PIT NO. 6

EQUIPMENT: **CASE 580N**
EXCAVATION TYPE: **24" BUCKET**
FIELD ENGINEER: **C. Bartlett**

MOISTURE CONTENT (% OF DRY WT.)	DRY DENSITY (LBS/CU FT)	SAMPLE TYPE	SAMPLE	BLOWS/FT.	DEPTH (FEET)	USCS	GRAPHIC	SOIL DESCRIPTION
		G				GC		Clayey GRAVEL; with sand, cobbles and boulders, brown, damp
					5			
					10			**Excavator Refusal at 8 Feet on LIMESTONE**

N- **STANDARD PENETRATION TEST**
R- **RING SAMPLE**
C- **CORE: %RECOVERY/RQD**
G- **GRAB SAMPLE**
B- **BUCKET SAMPLE**

NOTES: **Groundwater Not Encountered**

THIS SUMMARY APPLIES ONLY AT THIS LOCATION AND AT THE TIME OF LOGGING. CONDITIONS MAY DIFFER AT OTHER LOCATIONS AND MAY CHANGE AT THIS LOCATION WITH TIME. DATA PRESENTED IS A SIMPLIFICATION.

Geotechnical Environmental Inspections Materials

Western Technologies Inc.
The Quality People
Since 1955

PROJECT: **JEROME WWTP IMPROVEMENTS**
PROJECT NO.: **2522JW197**

PLATE **A-9**

TEST PIT LOG

DATE EXCAVATED: **9-16-22**
LOCATION: **See Location Diagram**
ELEVATION: **Not Determined**

TEST PIT NO. 7

EQUIPMENT: **CASE 580N**
EXCAVATION TYPE: **24" BUCKET**
FIELD ENGINEER: **C. Bartlett**

MOISTURE CONTENT (% OF DRY WT.)	DRY DENSITY (LBS/CU FT)	SAMPLE TYPE	SAMPLE	BLOWS/FT.	DEPTH (FEET)	USCS	GRAPHIC	SOIL DESCRIPTION
		G				GC		Clayey GRAVEL; with sand, cobbles and boulders, brown, damp
					5			**Excavator Refusal at 5 Feet on LIMESTONE**
					10			

N- **STANDARD PENETRATION TEST**
R- **RING SAMPLE**
C- **CORE: %RECOVERY/RQD**
G- **GRAB SAMPLE**
B- **BUCKET SAMPLE**

NOTES: **Groundwater Not Encountered**

THIS SUMMARY APPLIES ONLY AT THIS LOCATION AND AT THE TIME OF LOGGING. CONDITIONS MAY DIFFER AT OTHER LOCATIONS AND MAY CHANGE AT THIS LOCATION WITH TIME. DATA PRESENTED IS A SIMPLIFICATION.

Geotechnical Environmental Inspections Materials

Western Technologies Inc.
The Quality People
Since 1955

PROJECT: **JEROME WWTP IMPROVEMENTS**
PROJECT NO.: **2522JW197**

PLATE **A-10**

TEST PIT LOG

DATE DRILLED: **9-16-22**
LOCATION: **See Location Diagram**
ELEVATION: **Not Determined**

BORING NO. 8

EQUIPMENT TYPE: **HAND AUGE**
DRILLING TYPE: **4" DIA. AUGER**
FIELD ENGINEER: **C. Bartlett**

MOISTURE CONTENT (% OF DRY WT)	DRY DENSITY (LBS/CU FT)	SAMPLE TYPE	SAMPLE	BLOWS/FT.	DEPTH (FEET)	USCS	GRAPHIC	SOIL DESCRIPTION
		G				GC		Clayey GRAVEL; with sand, cobbles and boulders, brown, slightly damp
								Hand Auger Refusal at 1 Foot on Cobbles and Boulders
					5			
					10			

N- STANDARD PENETRATION TEST
R- RING SAMPLE
CA- CALIFORNIA MODIFIED SAMPLER
G- GRAB SAMPLE
B- BUCKET SAMPLE

NOTES: **Groundwater Not Encountered**

THIS SUMMARY APPLIES ONLY AT THIS LOCATION AND AT THE TIME OF LOGGING. CONDITIONS MAY DIFFER AT OTHER LOCATIONS AND MAY CHANGE AT THIS LOCATION WITH TIME. DATA PRESENTED IS A SIMPLIFICATION.

Geotechnical Environmental Inspections Materials
Western Technologies Inc.
The Quality People
Since 1955

PROJECT: **JEROME WWTP IMPROVEMENTS**
PROJECT NO.: **2522JW197**

PLATE **A-11**

BORING LOG

DATE DRILLED: **9-16-22**
LOCATION: **See Location Diagram**
ELEVATION: **Not Determined**

BORING NO. 9

EQUIPMENT TYPE: **HAND AUGE**
DRILLING TYPE: **4" DIA. AUGER**
FIELD ENGINEER: **C. Bartlett**

MOISTURE CONTENT (% OF DRY WT)	DRY DENSITY (LBS/CU FT)	SAMPLE TYPE	SAMPLE	BLOWS/FT.	DEPTH (FEET)	USCS	GRAPHIC	SOIL DESCRIPTION
		G				SC		Clayey SAND; with gravel, cobbles and boulders, brown, slightly damp
								Hand Auger Refusal at 1 Foot on Cobbles and Boulders
					5			
					10			

THIS SUMMARY APPLIES ONLY AT THIS LOCATION AND AT THE TIME OF LOGGING. CONDITIONS MAY DIFFER AT OTHER LOCATIONS AND MAY CHANGE AT THIS LOCATION WITH TIME. DATA PRESENTED IS A SIMPLIFICATION.

N- STANDARD PENETRATION TEST
R- RING SAMPLE
CA- CALIFORNIA MODIFIED SAMPLER
G- GRAB SAMPLE
B- BUCKET SAMPLE

NOTES: **Groundwater Not Encountered**

Geotechnical Environmental Inspections Materials

Western Technologies Inc.
The Quality People
Since 1955

PROJECT: **JEROME WWTP IMPROVEMENTS**
PROJECT NO.: **2522JW197**

PLATE **A-12**

BORING LOG

DATE DRILLED: **9-16-22**
LOCATION: **See Location Diagram**
ELEVATION: **Not Determined**

BORING NO. 10

EQUIPMENT TYPE: **HAND AUGE**
DRILLING TYPE: **4" DIA. AUGER**
FIELD ENGINEER: **C. Bartlett**

MOISTURE CONTENT (% OF DRY WT)	DRY DENSITY (LBS/CU FT)	SAMPLE TYPE	SAMPLE	BLOWS/FT.	DEPTH (FEET)	USCS	GRAPHIC	SOIL DESCRIPTION
		G				GC		Clayey GRAVEL; with sand, cobbles and boulders, brown, slightly damp
								Hand Auger Refusal at 1 Foot on Cobbles and Boulders
					5			
					10			

THIS SUMMARY APPLIES ONLY AT THIS LOCATION AND AT THE TIME OF LOGGING. CONDITIONS MAY DIFFER AT OTHER LOCATIONS AND MAY CHANGE AT THIS LOCATION WITH TIME. DATA PRESENTED IS A SIMPLIFICATION.

N- STANDARD PENETRATION TEST
R- RING SAMPLE
CA- CALIFORNIA MODIFIED SAMPLER
G- GRAB SAMPLE
B- BUCKET SAMPLE

NOTES: **Groundwater Not Encountered**

Geotechnical Environmental Inspections Materials

Western Technologies Inc.
The Quality People
Since 1955

PROJECT: **JEROME WWTP IMPROVEMENTS**
PROJECT NO.: **2522JW197**

PLATE
A-13

BORING LOG

DATE DRILLED: **9-16-22**
LOCATION: **See Location Diagram**
ELEVATION: **Not Determined**

BORING NO. 11

EQUIPMENT TYPE: **HAND AUGE**
DRILLING TYPE: **4" DIA. AUGER**
FIELD ENGINEER: **C. Bartlett**

MOISTURE CONTENT (% OF DRY WT)	DRY DENSITY (LBS/CU FT)	SAMPLE TYPE	SAMPLE	BLOWS/FT.	DEPTH (FEET)	USCS	GRAPHIC	SOIL DESCRIPTION
		G				GC		Clayey GRAVEL; with sand, cobbles and boulders, brown, slightly damp
								Hand Auger Refusal at 1 Foot on Cobbles and Boulders
					5			
					10			

N- STANDARD PENETRATION TEST
R- RING SAMPLE
CA- CALIFORNIA MODIFIED SAMPLER
G- GRAB SAMPLE
B- BUCKET SAMPLE

NOTES: **Groundwater Not Encountered**

THIS SUMMARY APPLIES ONLY AT THIS LOCATION AND AT THE TIME OF LOGGING. CONDITIONS MAY DIFFER AT OTHER LOCATIONS AND MAY CHANGE AT THIS LOCATION WITH TIME. DATA PRESENTED IS A SIMPLIFICATION.

Geotechnical Environmental Inspections Materials
Western Technologies Inc.
The Quality People
Since 1955

PROJECT: **JEROME WWTP IMPROVEMENTS**
PROJECT NO.: **2522JW197**

PLATE **A-14**

BORING LOG

DATE DRILLED: **9-16-22**
LOCATION: **See Location Diagram**
ELEVATION: **Not Determined**

BORING NO. 12

EQUIPMENT TYPE: **HAND AUGE**
DRILLING TYPE: **4" DIA. AUGER**
FIELD ENGINEER: **C. Bartlett**

MOISTURE CONTENT (% OF DRY WT)	DRY DENSITY (LBS/CU FT)	SAMPLE TYPE	SAMPLE	BLOWS/FT.	DEPTH (FEET)	USCS	GRAPHIC	SOIL DESCRIPTION
		G				GM		Silty GRAVEL; with sand, cobbles and boulders, brown, slightly damp
								Hand Auger Refusal at 1 Foot on Cobbles and Boulders
					5			
					10			

THIS SUMMARY APPLIES ONLY AT THIS LOCATION AND AT THE TIME OF LOGGING. CONDITIONS MAY DIFFER AT OTHER LOCATIONS AND MAY CHANGE AT THIS LOCATION WITH TIME. DATA PRESENTED IS A SIMPLIFICATION.

N- STANDARD PENETRATION TEST
R- RING SAMPLE
CA- CALIFORNIA MODIFIED SAMPLER
G- GRAB SAMPLE
B- BUCKET SAMPLE

NOTES: **Groundwater Not Encountered**

Geotechnical Environmental Inspections Materials

Western Technologies Inc.
The Quality People
Since 1955

PROJECT: **JEROME WWTP IMPROVEMENTS**
PROJECT NO.: **2522JW197**

PLATE **A-15**

BORING LOG

DATE DRILLED: **9-16-22**
LOCATION: **See Location Diagram**
ELEVATION: **Not Determined**

BORING NO. 13

EQUIPMENT TYPE: **HAND AUGE**
DRILLING TYPE: **4" DIA. AUGER**
FIELD ENGINEER: **C. Bartlett**

MOISTURE CONTENT (% OF DRY WT)	DRY DENSITY (LBS/CU FT)	SAMPLE TYPE	SAMPLE	BLOWS/FT.	DEPTH (FEET)	USCS	GRAPHIC	SOIL DESCRIPTION
		G				GC		Clayey GRAVEL; with sand, cobbles and boulders, brown, slightly damp
								Hand Auger Refusal at 1 Foot on Cobbles and Boulders
					5			
					10			

N- STANDARD PENETRATION TEST
R- RING SAMPLE
CA- CALIFORNIA MODIFIED SAMPLER
G- GRAB SAMPLE
B- BUCKET SAMPLE

NOTES: **Groundwater Not Encountered**

THIS SUMMARY APPLIES ONLY AT THIS LOCATION AND AT THE TIME OF LOGGING. CONDITIONS MAY DIFFER AT OTHER LOCATIONS AND MAY CHANGE AT THIS LOCATION WITH TIME. DATA PRESENTED IS A SIMPLIFICATION.

Geotechnical Environmental Inspections Materials
Western Technologies Inc.
The Quality People
Since 1955

PROJECT: **JEROME WWTP IMPROVEMENTS**
PROJECT NO.: **2522JW197**

PLATE **A-16**

BORING LOG

Test Pit/ Boring No.	Depth (ft)	USCS Class.	Particle Size Distribution (%) Passing by Weight							Atterberg Limits		Laboratory Compaction Characteristics			Remarks
			3"	¾"	#4	#10	#40	#200	2µ	LL	PI	Dry Density (pcf)	Optimum Moisture (%)	Method	
1	0-5	GM	100	71	56	48	31	15.5			NP				2
6	0-5	GC	100	69	50	41	30	18.3		43	18				2
7	0-5	GC	100	77	59	49	35	21.6		37	20				2
9	0-1	SC	100	87	71	57	40	25.6		41	16				2
12	0-1	GM	100	74	56	50	44	26.4		42	14				2

NOTE: NP = Non-plastic
µ = microns (2µ = 0.002mm)

REMARKS

Classification / Particle Size / Moisture-Density Relationship

1. Visual
2. Laboratory Tested
3. Minus #200 Only
4. Test Method ASTM D698/AASHTO T99
5. Test Method ASTM D1557/AASHTO T180
6. From the ADOT Family of Curves

Geotechnical Environmental Inspections Materials
Western Technologies Inc. The Quality People Since 1955
wt-us.com

PROJECT: TOWN OF JEROME WWTP IMPROVEMENTS
JOB NO.: 2522JW197

PLATE
B-1

SOIL PROPERTIES

Test Pit No.	Depth (ft.)	USCS Class.	Initial Dry Density (pcf)	Initial Water Content (%)	Laboratory Compaction Characteristics			Expansion Properties		Plasticity		Soluble		Remarks
					Dry Density(pcf)	Optimum Moisture(%)	Method	Surcharge (ksf)	Expansion (%)	LL	PI	Salts (ppm)	Sulfate (ppm)	
6	0-5	GC	91.5	17.4	96.4	20.3	A	0.1	1.9					1,2,3
7	0-5	GC	109.8	12.0	115.7	14.9	A	0.1	2.1					1,2,3

Notes: Initial Dry Density and Initial Water Content are remolded.

Remarks

1. Compacted density (approx. 95% of ASTM D698 max. density at moisture content slightly below optimum.)
2. Submerged to approximate saturation.
3. Test Method ASTM D698/AASHTO T99
4. Test Method ASTM D1557/AASHTO T180
5. From the ADOT Family of Curves

Geotechnical Environmental Inspections Materials

Western Technologies Inc. The Quality People Since 1955

wt-us.com

PROJECT: TOWN OF JEROME WWTP IMPROVEMENTS

JOB NO.: 2522JW197

SOIL PROPERTIES

PLATE

B-2

Test No.	Depth (ft)	Rock Classification	Unit Weight (pcf)	Unconfined Compressive Strength (psi)	Remarks
1	Surface	Limestone	166.7	4,150	1,2
2	Surface	Limestone	167.8	10,940	1,2

REMARKS:

1. ASTM D7012 – Unit Weight of Rock Cores
2. ASTM C39 – Unconfined Compressive Strength of Rock Cores

Geotechnical
Environmental
Inspections
Materials
Western Technologies Inc.
The Quality People
Since 1955
wt-us.com

PROJECT: TOWN OF JEROME WWTP IMPROVEMENTS
JOB NO.: 2522JW197

PLATE
B-3

ROCK PROPERTIES

CORROSIVITY TEST RESULTS

The procedures for soil survey tests and observations can be found in Appendix X1.1 of ASTM A674-10 and includes five soil properties: earth resistivity • pH • redox potential • sulfides • moisture.

Test Pit 7(0-5):

Analysis	Results		Points
Resistivity (ohm-cm)	1401		10
pH	8.5		0
Redox Potential (mV)	+134		0
Sulfides	trace		2
Moisture	fair		1
		Total Points	13

Boring 12(0-1):

Analysis	Results		Points
Resistivity (ohm-cm)	2481		2
pH	8.1		0
Redox Potential (mV)	+314		0
Sulfides	trace		2
Moisture	fair		1
		Total Points	5

The test procedure states that if the sum of the points is greater than 10, the soil is considered corrosive to ductile iron pipe and special protection against exterior corrosion is necessary. This conclusion is limited to soil corrosion and does not include consideration of stray direct current.

MOTZZ LABORATORY, INC.

Report: 943846
Reported: 9/28/2022
Received: 9/26/2022
PO: 2522P176

Laboratory Analysis Report

Western Technologies - Flagstaff
Gregory L. E. Burr
2400 East Huntington
Flagstaff, AZ 86004-8934

Project: 2522JW197

Lab Number	Sample ID
943846-2	1 (0-5')

Test Parameter

Test	*Method*	*Result*	*Units*
Soluble Salts	ARIZ 237b	1162	ppm
Sulfate	ARIZ 733b	236	ppm
Chloride	ARIZ 736b	7	ppm

Lab Number	Sample ID
943846-1	12 (0-1')

Test Parameter

Test	*Method*	*Result*	*Units*
Soluble Salts	ARIZ 237b	303	ppm
Sulfate	ARIZ 733b	15	ppm
Chloride	ARIZ 736b	7	ppm
Redox Potential	ASTM G200-09	314	(Eo) mV

BID FORM FOR CONSTRUCTION CONTRACT

ADDENDUM 1 VERSION

Contractor Name: _____

The terms used in this Bid with initial capital letters have the meanings stated in the Instructions to Bidders, the General Conditions, and the Supplementary Conditions.

ARTICLE 1—OWNER AND BIDDER

1.01 This Bid is submitted to:

Town of Jerome
Submitted electronically via email to tpierce@pacewater.com. Alternatively, Bidder may submit a hard copy the Town of Jerome, 600 Clark Street, Jerome, AZ 86331.

The undersigned Bidder proposes and agrees, if this Bid is accepted, to enter into an Agreement with Owner in the form included in the Bidding Documents to perform all Work as specified or indicated in the Bidding Documents for the prices and within the times indicated in this Bid and in accordance with the other terms and conditions of the Bidding Documents.

ARTICLE 2—ATTACHMENTS TO THIS BID

2.01 The following documents are submitted with and made a condition of this Bid:

A. Required Bid security;

B. List of Proposed Subcontractors;

~~C. List of Proposed Suppliers;~~

D. Evidence of authority to do business in the state of the Project; or a written covenant to obtain such authority within the time for acceptance of Bids;

E. Contractor's license number as evidence of Bidder's State Contractor's License or a covenant by Bidder to obtain said license within the time for acceptance of Bids;

F. Required Bidder Qualification Statement with supporting data; ~~and~~

G. If Bid amount exceeds $10,000, signed Compliance Statement (RD 400-6). Refer to specific equal opportunity requirements set forth in the Supplementary Conditions of the Construction Contract (EJCDC C-800);

H. If Bid amount exceeds $25,000, signed Certification Regarding Debarment, Suspension, Ineligibility and Voluntary Exclusion - Lower Tier Covered Transactions (AD-1048);

I. If Bid amount exceeds $100,000, signed RD Instruction 1940-Q Exhibit A-1, Certification for Contracts, Grants, and Loans.

ARTICLE 3—BASIS OF BID—LUMP SUM BID AND UNIT PRICES

3.01 *Lump Sum Bids*

A. Bidder will complete the Work in accordance with the Contract Documents for the following lump sum (stipulated) price(s), together with any Unit Prices indicated in Paragraph 3.02:

Copyright© 2018 National Society of Professional Engineers, American Council of Engineering Companies, and American Society of Civil Engineers. All rights reserved.

1. Lump Sum Price (Base Bid and Alternates)

BASE BID LUMP SUM BREAKDOWN					
	Item Description	**Unit**	**Estimated Qty**	**Bid Unit Price**	**Total Bid Price**
1	**ACCESS ROAD & SITE WORK**				
1.1	SWPPP	LS	1	$	$
1.2	Access Road (cut, grading, paving)	CY	4,440	$	$
1.3	Roadway Appurtenance (guardrail, gates, catch basins)	LS	1	$	$
1.4	Traffic Control	LS	1	$	$
2	**12" SEWER LINE IMPROVEMENTS**				
2.1	12" FPVC New Sewer Main	LF	143	$	$
2.2	Sewer Road Alignment Cut to Fill	CY	300	$	$
2.3	48" Manholes	EA	2	$	$
2.4	Bypass Plumbing and Equipment	LS	1	$	$
3	**TREATMENT PLANT SITE**				
3.1	Survey, Staking & Materials Testing	LS	1	$	$
3.2	Clearing & Grubbing	LS	1	$	$
3.3	Earthwork (Shoring, Erosion Control & Final Site Grading)	LS	1	$	$
3.4	Earthwork (Excavation, Fill & Backfill)	CY	2,495	$	$
3.5	Yard Piping	LS	1	$	$

Copyright© 2018 National Society of Professional Engineers, American Council of Engineering Companies, and American Society of Civil Engineers. All rights reserved.

BASE BID LUMP SUM BREAKDOWN					
	Item Description	**Unit**	**Estimated Qty**	**Bid Unit Price**	**Total Bid Price**
3.6	Fencing	LF	800	$	$
3.7	Blower / Admin Building	SF	750	$	$
3.8	Reed Bed Conversion to Drying Beds	LS	1	$	$
3.9	Wetland Cells Conversion to Emergency Overflow	LS	1	$	$
3.10	Retaining Walls	LF	262	$	$
3.11	Structural Concrete (SBR Tanks, Site, Chlorine Contact Channel)	CY	937	$	$
3.12	SBR Equipment	LS	1	$	$
3.13	Headworks Equipment	LS	1	$	$
3.14	Sludge Bagging Unit	LS	1	$	$
3.15	Polymer Dosing System	LS	1	$	$
3.16	Sludge Feed Pump	LS	1	$	$
3.17	Disinfection & Miscellaneous Equipment	LS	1	$	$
3.18	Site Electrical and Standby Generator	LS	1	$	$
3.19	Upgrade Site to 3 Phase Power	LS	1	$	$
4	**OTHER**				

Copyright© 2018 National Society of Professional Engineers, American Council of Engineering Companies, and American Society of Civil Engineers. All rights reserved.

BASE BID LUMP SUM BREAKDOWN					
	Item Description	**Unit**	**Estimated Qty**	**Bid Unit Price**	**Total Bid Price**
4.1	Mobilization/Demobilization	LS	1	$	$
4.2	Taxes	LS	1	$	$
				TOTAL BASE BID LUMP SUM AMOUNT	$

BID ALTERNATES LUMP SUM BREAKDOWN					
NEW 12" SEWER AND ACCESS ROAD					
	Item Description	**Unit**	**Estimated Qty**	**Bid Unit Price**	**Total Bid Price**
1	**Bid Adder:** 12" FPVC New Sewer Main	LF	2,750	$	$
2	**Bid Adder:** Restore Lateral Connections	EA	5	$	$
3	**Bid Adder:** Sewer Road Alignment Cut to Fill	CY	3,266	$	$
4	**Bid Adder:** 48" Manholes	EA	10	$	$
5	**Bid Adder:** Rockfall Barrier	LF	150	$	$
				TOTAL ALTERNATES LUMP SUM AMOUNT	

TOTAL LUMP SUM PRICE (BASE BID AND ALTERNATES)		
	Item Description	**Total Bid Price**
1	Total Lump Sum for Base Bid	$
2	Total Lump Sum for Bid Adder: New 12" Sewer and Access Road	$

Copyright© 2018 National Society of Professional Engineers, American Council of Engineering Companies, and American Society of Civil Engineers. All rights reserved.

TOTAL LUMP SUM BASE BID AND ALTERNATES PRICE	$

B. All specified cash allowance(s) are included in the price(s) set forth below, and have been computed in accordance with Paragraph 13.02 of the General Conditions.

TOTAL ALLOWANCE PRICE		
	Item Description	**Total Bid Price**
1	Materials Testing	$
	TOTAL ALLOWANCE PRICE	$

ARTICLE 4—DELETED

ARTICLE 5—DELETED

ARTICLE 6—TIME OF COMPLETION

6.01 Bidder agrees that the Work will be substantially complete and will be completed and ready for final payment in accordance with Paragraph 15.06 of the General Conditions on or before the dates or within the number of calendar days indicated in the Agreement.

6.02 **[Deleted]**

6.03 **[Deleted]**

6.04 Bidder accepts the provisions of the Agreement as to liquidated damages.

ARTICLE 7—BIDDER'S ACKNOWLEDGEMENTS: ACCEPTANCE PERIOD, INSTRUCTIONS, AND RECEIPT OF ADDENDA

7.01 *Bid Acceptance Period*

A. This Bid will remain subject to acceptance for 60 days after the Bid opening, or for such longer period of time that Bidder may agree to in writing upon request of Owner.

7.02 *Instructions to Bidders*

A. Bidder accepts all of the terms and conditions of the Instructions to Bidders, including without limitation those dealing with the disposition of Bid security.

7.03 *Receipt of Addenda*

A. Bidder hereby acknowledges receipt of the following Addenda:

Addendum Number	Addendum Date

Copyright© 2018 National Society of Professional Engineers, American Council of Engineering Companies, and American Society of Civil Engineers. All rights reserved.

7.04 **[Deleted]**

ARTICLE 8—BIDDER'S REPRESENTATIONS AND CERTIFICATIONS

8.01 *Bidder's Representations*

A. In submitting this Bid, Bidder represents the following:

1. Bidder has examined and carefully studied the Bidding Documents, including Addenda.

2. **[Deleted]**

3. Bidder is familiar with all Laws and Regulations that may affect cost, progress, and performance of the Work**, including all American Iron and Steel requirements.**

4. Bidder has carefully studied the reports of explorations and tests of subsurface conditions at or adjacent to the Site and the drawings of physical conditions relating to existing surface or subsurface structures at the Site that have been identified in the Supplementary Conditions, with respect to the Technical Data in such reports and drawings.

5. Bidder has carefully studied the reports and drawings relating to Hazardous Environmental Conditions, if any, at or adjacent to the Site that have been identified in the Supplementary Conditions, with respect to Technical Data in such reports and drawings.

6. Bidder has considered the information known to Bidder itself; information commonly known to contractors doing business in the locality of the Site; information and observations obtained from visits to the Site; the Bidding Documents; and the Technical Data identified in the Supplementary Conditions or by definition, with respect to the effect of such information, observations, and Technical Data on (a) the cost, progress, and performance of the Work; (b) the means, methods, techniques, sequences, and procedures of construction to be employed by Bidder, if selected as Contractor; and (c) Bidder's (Contractor's) safety precautions and programs.

7. Based on the information and observations referred to in the preceding paragraph, Bidder agrees that no further examinations, investigations, explorations, tests, studies, or data are necessary for the performance of the Work at the Contract Price, within the Contract Times, and in accordance with the other terms and conditions of the Contract.

8. Bidder is aware of the general nature of work to be performed by Owner and others at the Site that relates to the Work as indicated in the Bidding Documents.

9. Bidder has given Engineer written notice of all conflicts, errors, ambiguities, or discrepancies that Bidder has discovered in the Bidding Documents, and of discrepancies between Site conditions and the Contract Documents, and the written resolution thereof by Engineer is acceptable to Contractor.

10. The Bidding Documents are generally sufficient to indicate and convey understanding of all terms and conditions for performance and furnishing of the Work.

Copyright© 2018 National Society of Professional Engineers, American Council of Engineering Companies, and American Society of Civil Engineers. All rights reserved.

11. The submission of this Bid constitutes an incontrovertible representation by Bidder that without exception the Bid and all prices in the Bid are premised upon performing and furnishing the Work required by the Bidding Documents.

8.02 *Bidder's Certifications*

A. The Bidder certifies the following:

1. This Bid is genuine and not made in the interest of or on behalf of any undisclosed individual or entity and is not submitted in conformity with any collusive agreement or rules of any group, association, organization, or corporation.

2. Bidder has not directly or indirectly induced or solicited any other Bidder to submit a false or sham Bid.

3. Bidder has not solicited or induced any individual or entity to refrain from bidding.

4. Bidder has not engaged in corrupt, fraudulent, collusive, or coercive practices in competing for the Contract. For the purposes of this Paragraph 8.02.A:

a. Corrupt practice means the offering, giving, receiving, or soliciting of anything of value likely to influence the action of a public official in the bidding process.

b. Fraudulent practice means an intentional misrepresentation of facts made (a) to influence the bidding process to the detriment of Owner, (b) to establish bid prices at artificial non-competitive levels, or (c) to deprive Owner of the benefits of free and open competition.

c. Collusive practice means a scheme or arrangement between two or more Bidders, with or without the knowledge of Owner, a purpose of which is to establish bid prices at artificial, non-competitive levels.

d. Coercive practice means harming or threatening to harm, directly or indirectly, persons or their property to influence their participation in the bidding process or affect the execution of the Contract.

Copyright© 2018 National Society of Professional Engineers, American Council of Engineering Companies, and American Society of Civil Engineers. All rights reserved.

BIDDER hereby submits this Bid as set forth above:

Bidder:

_____

(typed or printed name of organization)

By: _____

(individual's signature)

Name: _____

(typed or printed)

Title: _____

(typed or printed)

Date: _____

(typed or printed)

If Bidder is a corporation, a partnership, or a joint venture, attach evidence of authority to sign.

Attest: _____

(individual's signature)

Name: _____

(typed or printed)

Title: _____

(typed or printed)

Date: _____

(typed or printed)

Address for giving notices:

_____

_____

Bidder's Contact:

Name: _____

(typed or printed)

Title: _____

(typed or printed)

Phone: _____

Email: _____

Address:

_____

_____

_____

Bidder's Contractor License No.: (if applicable) _____

Copyright© 2018 National Society of Professional Engineers, American Council of Engineering Companies, and American Society of Civil Engineers. All rights reserved.

PACE
Advanced Water Engineering

Jerome Wastewater Treatment Plant Improvements

ADDENDUM #2

Date: May 11, 2026

Quest CDN #9117808

This addendum is to formally issue responses to bidder questions and minor modifications. Reminder: Acknowledge receipt of this addendum on the Bid Form.

Attachments:

1. Attachment 1 – Jerome WWTP Improvements Plan Set
2. Attachment 2 – C-410 Bid Form

Clarifications

1. It was brought to our attention that the construction plan set included in the bid manual appears to be scaled to 8.5” x 11”. If there are any difficulties obtaining the correct plan size, 24” x 36” construction plans are **attached.**
2. The bid form quantities (form C-410 – Bid Form) have been updated. The updated bid form is **attached.** Please note that bidders are responsible for their own quantity takeoffs.

TOWN OF JEROME

YAVAPAI COUNTY, ARIZONA

WASTEWATER TREATMENT PLANT

100% ISSUED FOR BID

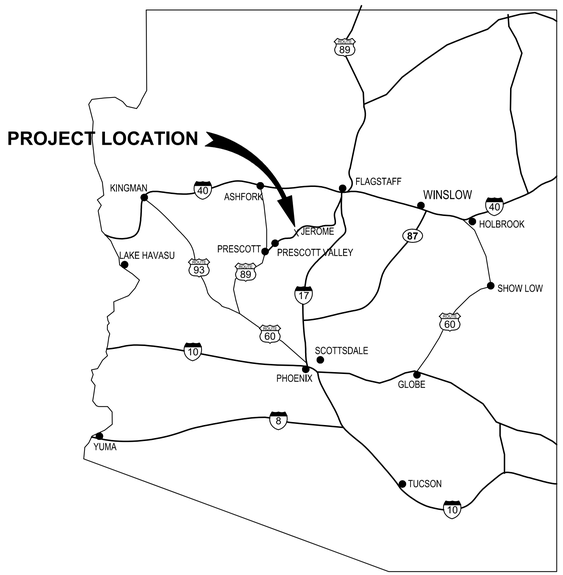

LOCATION MAP
N.T.S.

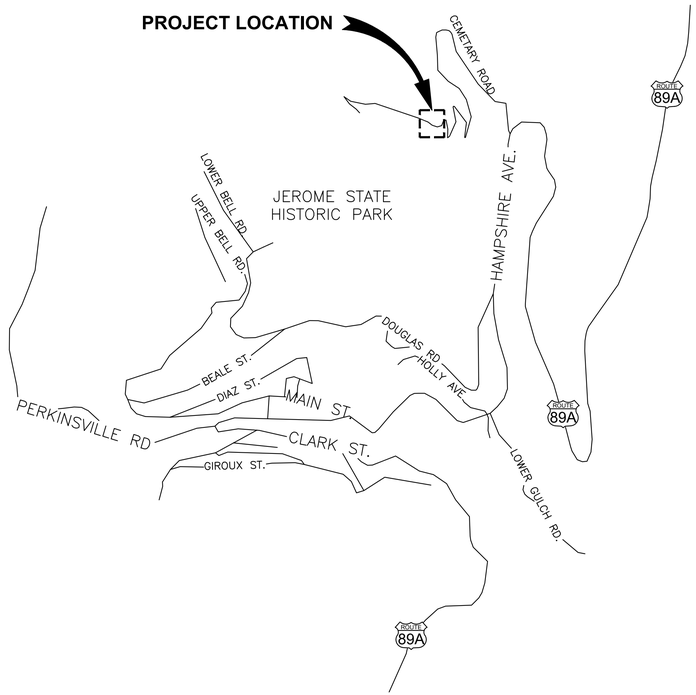

VICINITY MAP
N.T.S.

SURVEY DETAILS:

1. COORDINATES WERE VERIFIED IN THE FIELD USING REAL TIME KINEMATIC GPS OBSERVATIONS RELATIVE TO PUBLISHED CONTROL POINTS.
2. SURVEYED DURING THE MONTH OF DECEMBER 2022.
3. CONTRACTOR SHALL VERIFY HORIZONTAL AND VERTICAL CONTROLS IN THE FIELD PRIOR TO CONSTRUCTION.
4. PROJECT METADATA:
   - UNITS:
     COORDINATES, DISTANCE AND ELEVATIONS ARE SHOWN IN INTERNATIONAL FEET.
   - HORIZONTAL DATUM (BASIS OF BEARINGS):
     NAD83 (2011 Epoch) ARIZONA CENTRAL ZONE
   - VERTICAL DATUM:
     NAVD '88
   - PROJECT BENCHMARK:
     POINT NUMBER 1
     PRIMARY BENCHMARK DESCRIBED AS: SET 1/2" REBAR
     SET REBAR WITH OPUS PROCESSED SOLUTION:
     GRID NORTHING = 1365466.36
     GRID EASTING = 643466.42
     OPUS ELEVATION = 4827.11
5. THE COORDINATES PRESENTED ARE SHOWN TO THREE DECIMAL PLACES FOR CALCULATION PURPOSES AND ARE NOT REPRESENTATIVE OF THE PRECISION OF THE SURVEY MEASUREMENTS.
6. THIS NOT A PROPERTY BOUNDARY SURVEY.

PROJECT ADDRESS:

TOWN OF JEROME WASTEWATER TREATMENT PLANT
SEWER PLANT ROAD
JEROME, AZ 86331

PRINCIPAL OWNER:

TOWN OF JEROME
600 CLARK STREET, P.O. BOX 335
JEROME, AZ 86331

GEODETIC CONTROL:

PT	NORTHING	EASTING	ELEVATION
1	1365466.36	643466.42	4827.11
2	1365826.06	643587.50	4801.17
3	1365527.64	643545.12	4815.50
4	1364201.32	642110.19	4832.28
5	1364259.41	642191.45	4827.73
6	1365024.28	642592.65	4654.33

CONSULTANTS:

ENGINEER OF RECORD

PACIFIC ADVANCED CIVIL ENGINEERING (PACE)
8723 E. VIA de COMMERCIO, #A204
SCOTTSDALE, AZ 85258
BUSINESS LICENSE NO. 1006013
(480) 991-3595
CONTACT: TAYLOR PIERCE, P.E.
CONTACT: MIKE KREBS, P.E.

CIVIL ENGINEER
SEC ENGINEERING
825 COVE PARKWAY
COTTONWOOD, AZ 86326
(928) 282-7787
CONTACT: KRISHAN GINIGE

STRUCTURAL ENGINEER:
PK ASSOCIATES
6900 E. BELLEVIEW AVENUE, SUITE 200
GREENWOOD VILLAGE, CO 80111
(720) 799-1053
CONTACT: JAMES APPLEYARD

ELECTRICAL ENGINEER:
WRIGHT ENGINEERING
165 E. CHILTON DRIVE
CHANDLER, AZ 85225
(480) 497-5829
CONTACT: JACOB BIELEFELDT

FINAL DESIGN APPROVAL:

BY: _____ DATE: 4/21/2026
TOWN MANAGER
THE TOWN APPROVES THESE PLANS FOR CONCEPT ONLY AND IS NOT LIABLE FOR ERRORS OR OMISSIONS

RECORD DRAWING:

THESE RECORD DRAWINGS HAVE BEEN PREPARED BASED ON INFORMATION PROVIDED BY THE CONSTRUCTION CONTRACTOR. THE ENGINEER HAS INSPECTED THE COMPLETED FACILITIES AND CERTIFIES THAT THEY ARE A SUBSTANTIALLY ACCURATE PRESENTATION OF THE LAYOUT AND CONDITION OF THE CONSTRUCTED PROJECT.

NAME _____(SEAL)
REGISTRATION NO. _____ DATE _____
REVD. BY: _____
FIELD ENGINEERING

100% ISSUED FOR BID

PREPARED BY: TAYLOR B. PIERCE R.C.E 70097 DATE

PACE
Advanced Water Engineering
8723 E. VIA de COMMERCIO, SUITE A, SCOTTSDALE, CA 85258
P. (480) 991-3595 | www.pacewater.com

NO	BY	DATE	REVISIONS	DATE	APP.

Registered Professional Engineer (Civil)
CERTIFICATE NO. 70097
Taylor B. Pierce
Signed
ARIZONA, U.S.A.
Expires 12/31/28

THESE DRAWINGS ARE THE PROPERTY OF P.A.C.E. AND SHALL NOT BE REPRODUCED IN ANY MANNER NOR BE USED FOR CONSTRUCTION UNLESS STAMPED 'ISSUED FOR CONSTRUCTION'.

PREPARED BY:	PACE
DESIGNED BY:	NE
DRAWN BY:	DS, WW
CHECKED BY:	TP
SCALE:	AS NOTED
DATE:	NOV 2025
JOB NO.	B614

TITLE: **TITLE SHEET**

JOB: TOWN OF JEROME WASTEWATER TREATMENT PLANT — YAVAPAI CO. AZ

SHEET
G1.0
1 OF 99 SHEETS

JOB NO. B614

W:\B614\Engineering\B614-30\sheets\B614 - G1.0 TITLE SHEET.dwg - Tab: G1.0 - by nsddrigton on 04/21/26 at 12:17:57 PM

SHEET INDEX

DWG No.	SHT No.	TITLE
GENERAL		
1	G1.0	TITLE SHEET
2	G1.1	SHEET INDEX
3	G2.0	GENERAL NOTES AND ABBREVIATIONS
4	G3.0	HYDRAULIC PROFILE
5	G3.1	HYDRAULIC PROFILE
6	G3.2	PROCESS FLOW DIAGRAM
CIVIL		
7	C-1.0	NOTES
8	C-1.1	NOTES 2, LEGENDS, ABBREVIATIONS
9	C-1.2	TYPICAL SECTIONS
10	C-2.0	GRADING SITE MAP, SURVEY CONTROL
11	C-2.1	WWTP SITE GRADING-10SC
12	C-2.2	NORTH DR IMPROVEMENTS
13	C-2.3	WWTP ACCESS RD P&P 25+00+TO 30+00
14	C-2.4	WWTP ACCESS RD P&P 30+00 TO 35+00
15	C-2.5	WWTP ACCESS RD P&P 35+00 TO 37+50
16	C-2.6	WWTP ACCESS RD P&P 37+50 TO 39+75
17	C-2.7	NEW SEWER ACCESS ROAD
18	C-3.0	NEW SEWER SITE MAP, SURVEY CONTROL
19	C-3.1	NEW SEWER P&P
20	C-4.0	ALT SEWER SITE MAP, SURVEY CONTROL
21	C-4.1	ALT SEWER P&P 10+00 TO 15+25
22	C-4.2	ALT SEWER P&P 15+25 TO 20+50
23	C-4.3	ALT SEWER P&P 15+25 TO 20+50
24	C-4.4	ALT SEWER WEST TURNAROUND
25	C-4.5	ALT SEWER LATERAL PROFILES
MECHCANICAL		
26	M1.0	EXISTING SITE PLAN
27	M1.1	DEMOLITION PLAN PH-I
28	M1.2	DEMOLITION PLAN PH-II
29	M2.0	PROPOSED SITE PLAN
30	M2.1	YARD PIPING & GRADING PLAN
31	M2.2	YARD PIPING
32	M2.3	YARD PIPING
33	M2.4	YARD PIPING
34	M2.5	PLAN & PROFILE
35	M3.0	SBR MECHANICAL PLAN
36	M3.1	SBR MECHANICAL PLAN
37	M3.2	SBR MECHANICAL SECTIONS
38	M4.0	DEWATERING & CCC MECH PLAN
39	M4.1	CHLORINE CONTACT BASIN SECTION
40	M4.2	DEWATERING SECTION
41	M5.0	SLUDGE DRYING BEDS PLAN
42	M5.1	SLUDGE DRYING BEDS SECTIONS
43	M5.2	DRYING BED LIFT STATION SECTIONS
44	M6.0	EMERGENCY OVERFLOW BASIN PLAN AND SECTIONS
45	M7.0	BLOWER OPS PLAN
46	M8.0	MECHANICAL DETAILS I
47	M8.1	MECHANICAL DETAILS II
48	M8.2	MECHANICAL DETAILS III
49	M8.3	MECHANICAL DETAILS IV
50	M8.4	MECHANICAL DETAILS V
51	M8.5	MECHANICAL DETAILS VI
STRUCTURAL		
52	S1.1	GENERAL STRUCTURAL NOTES
53	S1.2	GENERAL STRUCTURAL NOTES
54	S1.3	TYPICAL DETAILS
55	S1.4	TYPICAL DETAILS
56	S1.5	TYPICAL DETAILS
57	S1.6	TYPICAL DETAILS
58	S1.7	TYPICAL DETAILS
59	S2.0	FOUNDATION PLAN
60	S2.01	FRAMING PLAN
61	S2.10	FRAMING PLAN
62	S3.1	FOUNDATION DETAILS
63	S3.2	FOUNDATION DETAILS
64	S3.3	FOUNDATION DETAILS
65	S4.1	FRAMING DETAILS
66	S4.2	FRAMING DETAILS

ARCHITECTURAL		
67	A1.0	BLOWER OPS ARCH PLAN
68	A2.0	BLOWER OPS ARCH REFLECTED CEILING PLAN
69	A3.0	BLOWER OPS ARCH SEWER & PLUMBING PLAN
70	A4.0	BLOWER OPS ARCH ELEVATIONS & SECTIONS
ELECTRICAL		
71	E1.1	ELECTRICAL COVER SHEET
72	E1.2	ELECTRICAL LEGEND
73	E2.1	SINGLE LINE DIAGRAM I
74	E2.2	SINGLE LINE DIAGRAM II
75	E2.3	LOAD CALCULATIONS
76	E2.4	WIRE & COND TABLES I
77	E2.5	WIRE & COND TABLES II
78	E3.1	ELECTRICAL PROPOSED SITE PLAN
79	E3.2	ELECTRICAL SBR PLAN
80	E3.3	ELECTRICAL DEWATERING PAD
81	E3.4	ELECTRICAL BLOWER OPS
82	E3.5	ELECTRICAL DRYING BED LIFT STATION
83	E3.6	ELECTRICAL OVERFLOW BASIN
84	E4.1	ELECTRICAL DETAILS I
85	E4.2	ELECTRICAL DETAILS II
86	E4.3	ELECTRICAL DETAILS III
87	E4.4	ELECTRICAL DETAILS IV
88	E4.5	ELECTRICAL DETAILS V
89	E4.6	ELECTRICAL DETAILS VI
90	E5.1	ELECTRICAL SCHEMATICS I
91	E5.2	ELECTRICAL SCHEMATICS II
92	E5.3	ELECTRICAL SCHEMATICS III
P&ID		
93	I0.0	P&ID GENERAL NOTES
94	I1.0	HEADWORKS
95	I1.1	SEQUENCING BATCH REACTOR
96	I1.2	CHLORINE CONTACT & DIGESTER
97	I1.3	BLOWER ROOM
98	I1.4	DEWATERING & LIFT STATIONS
99	I1.5	GENERATOR

LEGEND

- ASPHALT
- DECOMPOSED GRAVEL FILL
- CONCRETE
- SAND
- BACKFILL
- ENGINEERED BACKFILL
- DEMO
- EXISTING 1' CONTOUR
- CONSTRUCTION NOTES INCL. FITTINGS, VALVES & MISC. EQUIPMENT (SEE THE SAME SHT.)
- THRUST BLOCK
- EQUIPMENT

ABBREVIATIONS

AB	AGGREGATE BASE
AC	ASPHALT CONCRETE
A/C	AIR CONDITIONER
ADF	AVERAGE DAY FLOW
APPROX	APPROXIMATELY
ARCH	ARCHITECTURAL
ARV	AIR RELEASE VALVE
AUTO	AUTOMATIC
AUX	AUXILIARY
AVV	AIR VACUUM VALVE
AWS	ALARM WATER SURFACE
BO	BLOWOFF
BC	BEGINNING OF CURVE
BF	BLIND FLANGE
BLDG	BUILDING
BM	BEAM, BENCHMARK
BOD	BIOCHEMICAL OXYGEN DEMAND
BOS	BOTTOM OF SURFACE
BOT	BOTTOM
BVC	BEGIN VERTICAL CURVE
CATV	CABLE TELEVISION
CFH	CUBIC FOOT PER HOUR
CFM	CUBIC FOOT PER MINUTE
CFS	CUBIC FOOT PER SECOND
CH	CHUCK
CMU	CONCRETE MASONRY UNIT
CO	CLEANOUT
COTG	CLEANOUT TO GRADE
CONST	CONSTRUCTION
CPLG	COUPLING
CPVC	CHLORINATED POLYVINYL CHLORIDE
CTR	CENTER
CV	CHECK VALVE
CW	COLD WATER
CYL	CYLINDER
D	DRAIN
DAF	DISSOLVED AIR FLOATATION
DI	DROP INLET
DIA	DIAMETER
DIP	DUCTILE IRON PIPE
DO	DISSOLVED OXYGEN
DTL	DETAILS
DWG	DRAWING
E	ELECTRICAL
EA	EACH
EC	END OF CURVE
ECC	ECCENTRIC
EF	EACH FACE
EFF	EFFLUENT
EL	ELEVATION
EP	EDGE OF PAVEMENT
EQUIP	EQUIPMENT
EW	EACH WAY
EXH	EXHAUST
EX	EXISTING
FC	FLEXIBLE COUPLING
FD	FLOOR DRAIN
FF	FINISHED FLOOR
FG	FINISHED GROUND
FH	FIRE HYDRANT
FL	FLOW LINE
FLEX	FLEXIBLE
FLG	FLANGE
FM	FORCE MAIN
FPS	FEET PER SECOND
FS	FINISHED SLAB
FT	FEET
FUT	FUTURE
G	GAS
GA	GAUGE
GAL	GALLONS
GALV	GALVANIZED
GB	GRADE BREAK
GPD	GALLONS PER DAY
GPM	GALLONS PER MINUTE
H/A	HAND AUTOMATIC
HDPE	HIGH DENSITY POLYETHYLENE
HOA	HAND-OFF-AUTOMATIC
HORIZ	HORIZONTAL
HP	HIGH POINT
HWL	HIGH WATER LEVEL
HWS	HIGH WATER SURFACE
HZ	HERTZ
ID	INSIDE DIAMETER
I&C	INSTRUMENTATION & CONTROLS INTEGRATOR
IN	INCHES
INF	INFLUENT
IRR	IRRIGATION
INV	INVERT
JB	JUNCTION BOX
LBS	POUNDS
LBS/D	POUNDS PER DAY
LF	LINEAR FEET
LP	LOW PRESSURE
LWL	LOW WATER LEVEL
LWS	LOW WATER SURFACE
MAX	MAXIMUM
MCC	MOTOR CONTROL CENTER
MECH	MECHANICAL
MFR	MANUFACTURER
MGD	MILLION GALLONS PER DAY
MG/L	MILLIGRAMS PER LITER
MH	MANHOLE OR MAINTENANCE HOLE
MIN	MINIMUM, MINUTE
MISC	MISCELLANEOUS
MJ	MECHANICAL JOINT
MLSS	MIXED LIQUOR SUSPENDED SOLIDS
MMADF	MAX MONTH AVERAGE DAY FLOW
N	NORTHING
N/C	NORMALLY CLOSED
N/O	NORMALLY OPEN
NTS	NOT TO SCALE
NWL	NORMAL WATER LEVEL
NPSH	NET POSITIVE SUCTION HEAD
OC	ON CENTER
OD	OUTSIDE DIAMETER
PG	PRESSURE GAUGE
PI	POINT OF INTERSECTION
PO	PUSH ON
PP	POWER POLE, PIPE PENETRATION
PRFV	PRESSURE RELIEF VALVE
PRC	POINT OF REVERSE CURVE
PRV	PRESSURE REGULATING (REDUCING) VALVE
PS	PRESSURE SWITCH, PIPE SUPPORT
PSI	POUNDS PER SQUARE INCH
PV	PLUG VALVE
PVC	POLYVINYL CHLORIDE
PVMT	PAVEMENT
PW	POTABLE WATER
R	RADIUS
RAS	RETURN ACTIVATED SLUDGE
RED	REDUCER
REQ'D	REQUIRED
RPM	REVOLUTIONS PER MINUTE
RQMT	REQUIREMENT
R&R	REMOVE AND RELOCATE (REINSTALL)
R&S	REMOVE AND SAVE (SALVAGE)
R/W	RIGHT OF WAY
R&W	REMOVE AND WASTE
RW	RECLAIMED WATER
S	SLOPE
SS	SANITARY SEWER
SSMH	SANITARY SEWER MANHOLE
SBR	SEQUENCING BATCH REACTOR
SD	STORM DRAIN
SE	SECONDARY EFFLUENT
SEC	SECTION
SHT	SHEET
SOV	SHUT OFF VALVE
SPEC	SPECIFICATION
SQ	SQUARE
SS	STAINLESS STEEL
ST	STREET
STA	STATION
T&B	TOP AND BOTTOM
TB	THRUST BLOCK
TBA	TO BE ABANDONED
TDH	TOTAL DYNAMIC HEAD
TEL	TELEPHONE
TEMP	TEMPERATURE
TOS	TOP OF SLAB
TOW	TOP OF WALL
TYP	TYPICAL
UNO	UNLESS NOTED OTHERWISE
VAC	VOLTS ALTERNATING CURRENT
VDC	VOLTS DIRECT CURRENT
VERT	VERTICAL
VCP	VITRIFIED CLAY PIPE
W	WATER
WAS	WASTE ACTIVATED SLUDGE
W/O	WITHOUT
WS	WATER SURFACE

100% ISSUED FOR BID

NO	BY	DATE	REVISIONS	DATE	APP.

Registered Professional Engineer (Civil) CERTIFICATE NO. 70097 Timothy B. Pierce Signed 12/31/25 ARIZONA, U.S.A. Expires 12/31/28

THESE DRAWINGS ARE THE PROPERTY OF P.A.C.E. AND SHALL NOT BE REPRODUCED IN ANY MANNER NOR BE USED FOR CONSTRUCTION UNLESS STAMPED 'ISSUED FOR CONSTRUCTION'.

PREPARED BY: PACE
DESIGNED BY: NE
DRAWN BY: DS, WW
CHECKED BY: TP
SCALE: AS NOTED
DATE: NOV 2025
JOB NO.: B614

TITLE: SHEET INDEX

JOB: TOWN OF JEROME WASTEWATER TREATMENT PLANT
YAVAPAI CO. AZ

PREPARED BY: TAYLOR B. PIERCE
PACE Advanced Water Engineering
8723 E. Via de Ventura, Suite A-144, Scottsdale, CA 85258
P: (480) 991-3395 | www.pacewater.com
R.C.E 70097 DATE

SHEET G1.1
2 OF 99 SHEETS

JOB NO. B614

W:\B614\Engineering\B614-30\sheets\B614 - G1.0 TITLE SHEET.dwg - Tab: G1.1 - by reddington on 04/21/26 at 12:17:57 PM

GENERAL NOTES:

1. ALL PAVING, GRADING, PIPING, AND UTILITY LINE CONSTRUCTION WORK WITHIN THE PUBLIC RIGHT OF WAY, ON PRIVATE STREETS, ACCESS WAYS, LOT GRADING, MATERIALS, AND WORKMANSHIP SHALL COMPLY WITH TOWN OF JEROME ENGINEERING STANDARDS AND SPECIFICATIONS, AND SHALL CONFORM TO THE LATEST MARICOPA ASSOCIATION OF GOVERNMENTS (MAG) AND A.D.O.T. STANDARD DETAILS AND SPECIFICATIONS. GRADING WORK SHALL CONFORM TO MAG SPECIFICATIONS, THE SOILS REPORT, AND CHAPTER 70 ENTITLED "EXCAVATION AND GRADING" OF THE UNIFORM BUILDING CODE (UBC) LATEST EDITION, SUBSECTIONS 7001 TO 7005, 7009 TO 7013, FIGURES 70-1 AND 70-2 AND AS STATED THEREIN. LOCAL MUNICIPAL STANDARD DETAILS WILL CONTINUE TO APPLY WHERE NOT ADOPTED OR INCLUDED BY MAG. THE FOLLOWING NOTES AND SPECIFICATIONS ARE HEREBY MADE A PART OF THE CONTRACT DOCUMENTS AND PROJECT SPECIFICATIONS. WHERE THERE EXISTS A CONFLICT BETWEEN THESE NOTES, MAG SPECS, UBC, THE SOILS REPORT, OR THE PROJECT SPECIFICATIONS, THE MORE STRINGENT OF THE REQUIREMENTS SHALL GOVERN UNLESS PRIOR CLARIFICATION FROM THE ENGINEER HAS BEEN GIVEN IN WRITING TO THE CONTRACTOR. THE CONTRACTOR AS STATED HEREIN SHALL MEAN THE GENERAL CONTRACTOR AND HIS ASSOCIATED SUBCONTRACTORS. THE GENERAL CONTRACTOR IS RESPONSIBLE FOR THE COORDINATION AND PERFORMANCE OF THE WORK OF ALL HIS SUBCONTRACTORS AND SUPPLIERS.
2. ALL WORK SHALL BE BID AND INSTALLED BY THE CONTRACTOR COMPLETE AND OPERATIONAL TO LINES, GRADES, AND FUNCTIONS INDICATED ON ALL PLANS AND SPECIFICATIONS. THE CONTRACTOR SHALL PROVIDE ALL LABOR, MATERIALS, EQUIPMENT, AND SERVICES NECESSARY TO COMPLETE ALL PROJECT EARTHWORK AND SITE WORK INCLUDING BUT NOT LIMITED TO: SITE CLEARING, GRUBBING, DEMOLITION, DEBRIS REMOVALS FROM THE SITE, IMPORT AND/OR EXPORT OF SOILS AND OTHER MATERIALS TO AND FROM THE SITE, BORROW MATERIALS, TEMPORARY SOILS MATERIAL STOCKPILING, BACKFILL OF ONSITE BORROW PITS, MOVING OF MATERIALS, CUT AND FILL, SLOPES, SOILS AND BANK STABILIZATION AND PROTECTION, BERMING, ROADWAY EXCAVATIONS, RELOCATIONS, STRUCTURE EXCAVATIONS, TRENCHING, ALL BACKFILLING, SITE GRADING, PAVING, PIPING, UTILITY LINE AND STORM DRAINAGE CONSTRUCTION, CURBS, SITE CONCRETE WORK AND OTHER MISCELLANEOUS SITE WORK STRUCTURES AND ITEMS INDICATED ON THE PLANS AND IN THE CONTRACT DOCUMENTS.
3. ANY QUANTITIES SHOWN ON PLANS ARE NOT VERIFIED BY THE ENGINEER. QUANTITIES ARE APPROXIMATE ONLY AND INTENDED AS A GUIDE FOR ESTIMATING PURPOSES. THE CONTRACTOR IS RESPONSIBLE FOR PROVIDING HIS OWN QUANTITY TAKE OFFS. THE CONTRACTOR SHALL VISIT THE SITE AND REVIEW THE SOILS CONDITIONS AND THE SOILS REPORT WITH THE PROJECT SOILS ENGINEER PRIOR TO BIDDING THIS PROJECT. ANY DISCREPANCIES IN SITE MATERIALS SHALL BE BROUGHT TO THE ATTENTION OF THE DESIGN ENGINEER 7 DAYS MINIMUM PRIOR TO BIDDING FOR REVIEW. ALL SHRINK OF EARTH MATERIAL OR EXCESS MATERIAL FROM UTILITY TRENCHES AND FOUNDATIONS SHALL BE INCLUDED IN THE CONTRACTOR'S BID.
4. THE ENGINEER WILL NOT BE RESPONSIBLE FOR CONSTRUCTION MEANS, METHODS, TECHNIQUES, SEQUENCES, OR PROCEDURES OR FOR SAFETY PRECAUTIONS OR PROGRAMS UTILIZED IN CONNECTION WITH THE WORK, AND HE WILL NOT BE RESPONSIBLE FOR THE CONTRACTOR'S FAILURE TO CARRY OUT THE WORK IN ACCORDANCE WITH THE CONTRACT DOCUMENTS.
5. THE CONTRACTOR SHALL BE RESPONSIBLE FOR VERIFYING THE LIMITS OF THE WORK AREA FOR ALL PHASES OF THE WORK PRIOR TO BEGINNING CONSTRUCTION OF THOSE PHASES. ALL CONSTRUCTION LIMITS, AREAS OF WORK, SETBACKS, PERIMETERS, ADJACENT PROPERTY LINES, BOUNDARIES, AND OTHER CRITERIA DEFINING THE LIMITS OF THE CONTRACTOR'S WORK AREA AND LIMITS SHALL BE STAKED BY THE CONTRACTOR'S SURVEYOR PRIOR TO CONSTRUCTION OF CLEARING OF THE SITE. THE CONTRACTOR SHALL BE RESPONSIBLE FOR FAMILIARIZING HIMSELF WITH THE EXTENT OF WORK TO BE DONE IN EACH SEPARATE PHASE OF THE PROJECT, AND ANY WORK NECESSARY IN INACTIVE PHASES REQUIRED TO DEEM THE ACTIVE PHASES FINISHED, SAFE, AND SERVICEABLE.
6. THE DESIGN ENGINEER RESERVES THE RIGHT TO MAKE MINOR FIELD MODIFICATIONS TO GRADES AND STRUCTURE DESIGNS TO ACCOMMODATE FIELD CONDITIONS FOUND ON THE SITE. THIS INCLUDES BUT IS NOT LIMITED TO MINOR MODIFICATIONS TO GRADE, ALIGNMENT, SLOPE, OR STRUCTURE LOCATIONS. THE ENGINEER SHALL HAVE THE RIGHT TO MAKE SUCH CHANGES IN WRITING IN THE LOCATION AND QUANTITIES OF WORK AS MAY BE DEEMED ADVISABLE.
7. NO JOB WILL BE CONSIDERED COMPLETE UNTIL FINAL GRADING IS COMPLETE AND ALL CURBS, PAVEMENT, AND SIDEWALKS HAVE BEEN SWEPT CLEAN OF ALL DIRT AND DEBRIS, ALL SURVEY MONUMENTS ARE INSTALLED AND ALL VALVES, MANHOLES, AND BOXES HAVE BEN ADJUSTED ACCORDING TO THE PLANS AND STANDARD DETAILS.
8. SEE SPECIFICATION SECTION 01 11 00 SUMMARY OF WORK FOR DIVISION OF RESPONSIBILITY. SEE SPECIFICATION SECTION 00 70 00 CONDITIONS OF THE CONTRACT FOR DEFINITIONS.
9. ALL CONSTRUCTION SHALL BE IN ACCORDANCE WITH UNITED STATES ENVIRONMENTAL PROTECTION AGENCY STANDARDS AND POLICIES AND CURRENT SUPPLEMENTS THERETO.
10. ANY WORK PERFORMED WITHOUT THE APPROVAL OF THE ENGINEER AND/OR ALL WORK AND MATERIAL NOT IN CONFORMANCE WITH THE SPECIFICATIONS IS SUBJECT TO REMOVAL AND REPLACEMENT AT THE CONTRACTOR'S EXPENSE.
11. DEBRIS SHALL BE DISPOSED OF WITHIN APPROVED DISPOSAL FACILITIES.
12. THE CONTRACTOR SHALL PROVIDE ADEQUATE MEANS FOR CLEANING TRUCKS AND/OR OTHER EQUIPMENT OF MUD PRIOR TO ENTERING PUBLIC STREETS. IT IS THE CONTRACTOR'S RESPONSIBILITY TO CLEAN STREETS, ALLEY DUST, AND TAKE WHATEVER MEASURES ARE NECESSARY TO ENSURE THAT ALL ADJACENT ROADS ARE MAINTAINED IN A CLEAN, MUD AND DUST FREE CONDITION AT ALL TIMES.
13. CONTRACTOR SHALL TAKE MEASURES TO CONTROL DUST AND FUGITIVE EMISSIONS, INCLUDING BUT NOT LIMITED TO WATERING THE SITE TWICE DAILY DURING GRADING TO CONTROL DUST.
14. AN APPROVED SET OF PLANS SHALL BE ON THE JOB SITE AT ALL TIMES WORK IS IN PROGRESS. DEVIATION FROM THE PLANS WILL NOT BE ALLOWED WITHOUT AN APPROVED PLAN REVISION OR AUTHORIZATION FROM THE ENGINEER.
15. THESE DRAWINGS INDICATE THE GENERAL EXTENT OF THE REQUIRED WORK AND ARE NOT INTENDED TO INDICATE EVERY ELEMENT REQUIRED. THE CONTRACTOR SHALL FURNISH ALL ELEMENTS TO COMPLETE THE SCOPE OF WORK IN ACCORDANCE WITH THE CONTRACT DOCUMENTS. ALL ITEMS REQUIRING CLARIFICATIONS SHALL BE SUBMITTED AS A "REQUEST FOR INFORMATION" (RFI) TO THE ENGINEER PER SECTION 01 31 00 OF THE SPECIFICATIONS.
16. ALL CONSTRUCTION VEHICLES OR EQUIPMENT, MOBILE OR FIXED OPERATED, SHALL BE EQUIPPED WITH PROPERLY OPERATING AND MAINTAINED MUFFLERS IN ACCORDANCE WITH THE LOCAL NOISE ORDINANCES.
17. THE CONTRACTOR SHALL PROVIDE SHOP DRAWINGS FOR THE ENGINEER'S REVIEW, AS MAY BE NECESSARY FOR THE EXECUTION OF THE WORK AND AS REQUIRED BY THE DRAWINGS AND SPECIFICATIONS.
18. DUE TO THE ONGOING OPERATION OF THE FACILITY, CONTRACTOR SHALL PROVIDE A SEQUENCE OF CONSTRUCTION FOR TOWN AND ENGINEER'S APPROVAL. TWO WEEKS PRIOR TO THE START OF CONSTRUCTION THE SEQUENCE SHALL INCLUDE A DETAILED SCHEDULE OF EVENTS AND TIMEFRAME. ALL EQUIPMENT, PIPING, LABOR, ETC. FOR THE SEQUENCE SHALL BE THE RESPONSIBILITY OF THE CONTRACTOR. ALL TEMPORARY SHUTDOWNS AND CHANGES IN FACILITY OPERATION SHALL BE DISCLOSED TO OWNER AT LEAST 7 DAYS PRIOR.
19. PAVEMENT REPAIR, AS REQUIRED, MAY BE WITH COLD-MIX ASPHALT CONCRETE, WITH A MINIMUM THICKNESS OF 2 INCHES, USING AGGREGATE GRADING IN ACCORDANCE WITH MARSHALL MIX DESIGN OF SECTION 710 OF MAG UNIFORM STANDARD SPECIFICATIONS AND DETAILS FOR PUBLIC WORK CONSTRUCTION.
20. ALL CONSTRUCTION WORK SHALL BE PERFORMED IN ACCORDANCE WITH THE SOILS AND/OR GEOTECHNICAL REPORT PREPARED BY WESTERN TECHNOLOGIES, INC. DATED 10/25/2022. THIS REPORT IS SUPPLEMENTED BY 1) THESE PLANS AND SPECIFICATIONS, 2) YAVAPAI COUNTY PUBLIC WORKS STANDARDS AND SPECIFICATIONS, 3) STATE OF ARIZONA STANDARD DETAILS. IN THE EVENT OF CONFLICT, THE FORMER SHALL TAKE PRECEDENCE OVER THE LATTER. THE PERFORMANCE AND COMPLETION OF ALL WORK MUST BE TO THE SATISFACTION OF THE ENGINEER OF RECORD.

GENERAL CONSTRUCTION NOTES

ENGINEER'S NOTES

1. THE ENGINEER AND APPLICABLE AGENCY MUST APPROVE, PRIOR TO CONSTRUCTION, ANY ALTERATION TO OR VARIANCE FROM THESE PLANS. ANY VARIATION FROM THESE PLANS SHALL BE PROPOSED ON CONSTRUCTION FIELD PRINTS AND TRANSMITTED TO THE ENGINEER.
2. THE CONTRACTOR SHALL PROTECT AND MAINTAIN ALL EXISTING UTILITIES ON THE SITE. ANY DAMAGE TO EXISTING UTILITIES, WHETHER SHOWN OR NOT ON THE DRAWING SHALL BE REPAIRED/REPLACED AT THE CONTRACTOR'S EXPENSE. EXISTING SURFACE FEATURES AND FENCING SHALL BE REPLACED IN KIND.
3. ANY INSPECTION BY THE TOWN, COUNTY OR THE ENGINEER, SHALL NOT IN ANY WAY RELIEVE THE CONTRACTOR FROM ANY OBLIGATION TO PERFORM THE WORK IN STRICT COMPLIANCE WITH THE APPLICABLE CODES AND AGENCY REQUIREMENTS.
4. CONTRACTOR IS TO LOCATE ALL EXISTING PROPERTY MONUMENTS PRIOR TO CONSTRUCTION. NO EXISTING SURVEY MONUMENTATION SHALL BE REMOVED OR DISTURBED BY THE CONTRACTOR WITHOUT NOTIFICATION AND APPROVAL OF THE PROJECT SURVEYOR. THE CONTRACTOR SHALL CONTACT THE PROJECT SURVEYOR FOR THE SETTING OF REFERENCE POINTS 48 HOURS PRIOR TO DISTURBING OR REMOVING ANY MONUMENTS. A REGISTERED LAND SURVEYOR AT THE CONTRACTOR'S EXPENSE SHALL REPLACE ANY MONUMENTS DISTURBED DURING THE CONSTRUCTION OF THIS PROJECT.
5. NOTHING CONTAINED IN THE CONTRACT DOCUMENTS SHALL CREATE, NOR SHALL BE CONSTRUED TO CREATE, ANY CONTRACTUAL RELATIONSHIP BETWEEN THE ENGINEER AND THE CONTRACTOR OR ANY SUBCONTRACTOR.
6. ANY CONSTRUCTION WATER OBTAINED FROM THE TOWN WATER SOURCE WILL REQUIRE METER AND A BULK WATER PERMIT TO TRACK USAGE. THE TOWN WILL WAIVE FEES FOR PERMITTING AND USAGE IF USAGE IS LESS THEN 20,000 GALLONS. CONTACT THE TOWN OF JEROME AT (928) 634-7943 TO REQUEST A METER.
7. THE CONTRACTOR SHALL MAKE NO CLAIM AGAINST THE OWNER OR THE ENGINEER REGARDING ALLEGED INACCURACY OF CONSTRUCTION STAKES SET BY THE ENGINEER UNLESS ALL SURVEY STAKES SET BY THE ENGINEER ARE MAINTAINED INTACT AND CAN BE VERIFIED AS TO THEIR ORIGIN. IF, IN THE OPINION OF THE ENGINEER, THE STAKES ARE NOT MAINTAINED INTACT AND CANNOT BE VERIFIED AS TO THEIR ORIGIN, ANY REMEDIAL WORK REQUIRED TO CORRECT ANY ITEM OR IMPROPER CONSTRUCTION WORK IN THIS DEVELOPMENT SHALL BE PERFORMED AT THE SOLE EXPENSE OF THE RESPONSIBLE CONTRACTOR OR SUBCONTRACTOR.
8. TRAFFIC CONTROL SHALL BE MAINTAINED IN ACCORDANCE WITH THE TOWN OF JEROME MUNICIPAL CODES.
9. A PORTION OF THIS PROJECT SITE IS LOCATED WITHIN A DOCUMENTED 100-YR FEMA FLOODLAIN AS DESIGNATED ON THE PLANS.
10. IN CASES WHEN UNSTAKED EXISTING UTILITIES ARE ENCOUNTERED, SOME MINOR DEVIATION TO THE PROPOSED SEWER ALIGNMENT MAY BE ALLOWED TO MAINTAIN MINIMUM SEPARATION DISTANCES BETWEEN UTILITIES. ANY PROPOSED CHANGES TO THE ALIGNMENT MUST BE SUBMITTED TO THE TOWN'S REPRESENTATIVE FOR REVIEW. NO CHANGES WILL BE ALLOWED WITHOUT PROPER APPROVAL.
11. PRIOR TO BIDDING THE WORK, THE CONTRACTOR SHALL THOROUGHLY SATISFY HIMSELF AS TO THE ACTUAL CONDITIONS AND EARTHWORK QUANTITIES, IF ANY. NO CLAIM SHALL BE MADE AGAINST THE OWNER OR ENGINEER FOR ANY EXCESS OR DEFICIENCY THEREIN, ACTUAL OR RELATIVE.
12. THE ENGINEERS SHALL BE NOTIFIED BEFORE ANY ONSITE CONSTRUCTION BEGINS.
13. A SEPARATE PERMIT IS NECESSARY FOR ANY OFFSITE CONSTRUCTION.
14. APPROVAL OF THESE PLANS SHALL NOT PREVENT THE TOWN FROM REQUIRING CORRECTION OF ERRORS IN THE PLANS WHERE SUCH ERRORS ARE SUBSEQUENTLY FOUND TO BE IN VIOLATION OF ANY LAW OR ORDINANCE.

MECHANICAL CONSTRUCTION NOTES:

1. CONTRACTOR TO INSTALL PIPE SUPPORTS PER MANUFACTURER'S REQUIREMENTS AND SPECIFICATIONS. ALL DRY AREA PIPE SUPPORTS SHALL BE GALVANIZED STEEL U.N.O. ALL SUBMERGED PIPE SUPPORTS SHALL BE S.S. 316.
2. CONTRACTOR TO INSTALL PUMP BASE, GUIDE RAILS, AND BRACKETS PER MANUFACTURER'S REQUIREMENTS. CONTRACTOR SHALL CONFIRM SUPPLY OF PUMP MOUNTING EQUIPMENT WITH PUMP SUPPLIER.
3. ALL PROCESS PIPES SHALL BE COLOR COATED PER THE SPECIFICATIONS WITH THE EXCEPTION OF STAINLESS STEEL PIPES. ALL ABOVE GROUND PIPES SHALL ALSO BE OUTFITTED WITH A FLOW DIRECTION ARROW.
4. ALL ANCHORING/FASTENING SYSTEMS SHALL BE 316 S.S. REGARDLESS OF LOCATION, U.N.O.
5. CONTRACTOR SHALL SUBMIT SHOP DRAWINGS FOR REVIEW AND APPROVAL FOR EACH EQUIPMENT ITEM PRIOR TO INSTALLATION. INSTALLATION DETAILS FOR ALL EQUIPMENT ITEMS SHALL BE PER RESPECTIVE EQUIPMENT MANUFACTURER'S SHOP DRAWINGS AND RECOMMENDED INSTALLATION REQUIREMENTS.
6. ALL D.I.P. SHALL BE CLASS 350, UNLESS NOTED OTHERWISE.
7. ELEVATION OF EXISTING STRUCTURES, PIPING, AND COMPONENTS ARE APPROXIMATE. CONTRACTOR TO FIELD VERIFY PRIOR TO CONSTRUCTION.
8. PRECAST SUPPLIER TO PROVIDE STRUCTURAL CALCULATIONS STAMPED BY REGISTERED ENGINEER IN AZ TO DOCUMENT DESIGN OF PRECAST STRUCTURE.
9. GROOVE FITTINGS MAY BE USED IN LIEU OF FLANGE FITTINGS FOR ALL ABOVE GROUND D.I. PIPING.
10. CONTRACTOR SHALL BE RESPONSIBLE FOR ALL TEMPORARY PIPING AND EQUIPMENT NEEDED FOR PROCESS ISOLATION, BYPASS, AND TRANSITION.
11. ALL YARD PIPING SHALL BE SURVEYED FOR VERTICAL AND HORIZONTAL ALIGNMENT PRIOR TO BACKFILL.
12. ALL PIPE SUPPORTS SPACING SHALL MEET PIPING MANUFACTURER'S REQUIREMENTS.
13. STRUCTURAL DIMENSIONS CONTROLLED BY OR RELATED TO MECHANICAL OR ELECTRICAL EQUIPMENT SHALL BE VERIFIED BY THE CONTRACTOR AND REFLECTED ON SHOP DRAWING PRIOR TO CONSTRUCTION.
14. ALL PVC PIPE GREATER THAN 3" IN DIAMETER SHALL BE DIPS.
15. ALL EXPOSED PIPE SHALL INCLUDE HEAT TRACING AND INSULATION.
16. ALL NEW BURIED GRAVITY SEWER LINES AND FORCE MAINS SHALL BE INSTALLED WITH A MINIMUM 3' DEPTH OF EARTH COVER.

PERMITS

1. CONTRACTOR SHALL OBTAIN ALL PERMITS AT HIS OWN EXPENSE FROM LOCAL MUNICIPAL AND AIR POLLUTION CONTROL AUTHORITIES PRIOR TO BEGINNING CONSTRUCTION.
2. IT SHALL BE THE RESPONSIBILITY OF THE CONTRACTOR TO ARRANGE FOR THE RELOCATION AND RELOCATION COSTS, IF ANY, OF ALL UTILITIES, AND SUBMIT A UTILITY RELOCATION SCHEDULE TO THE MUNICIPALITY AND DESIGN ENGINEER PRIOR TO CONSTRUCTION. ALL PUBLIC UTILITY EQUIPMENT POLES, BOXES, STRUCTURES, AND MUNICIPAL UTILITY COMPANY EQUIPMENT SHALL BE RELOCATED BY THE APPROPRIATE UTILITY COMPANY OR MUNICIPALITY BEFORE ANY WORK IS STARTED.

RECORD DRAWINGS

1. ACCEPTANCE OF THE COMPLETED PAVING, GRADING, OR UTILITY INSTALLATION WILL NOT BE GIVEN UNTIL REPRODUCIBLE AS-BUILT PLANS HAVE BEEN SUBMITTED BY THE ENGINEER AND APPROVED BY THE LOCAL GOVERNING AGENCY.

OBSERVATION

1. THE CONTRACTOR SHALL CONTACT THE APPROPRIATE PUBLIC UTILITY COMPANIES FOR INSPECTION OF TRENCHING, BEDDING, AND BACKFILLING DONE IN CONJUNCTION WITH INSTALLATION OF THOSE UTILITIES ON THIS PROJECT.
2. SOILS COMPACTION TEST RESULTS MUST BE SUBMITTED TO THE ENGINEER'S OFFICE FOR ALL FILL MATERIAL FOR ROADS, TRENCH BACKFILL, AND SITE FILL MATERIALS UNDER SLABS AND STRUCTURES. NO FILL MATERIALS SHALL BE PLACED WITHOUT TESTING DURING PLACEMENT. CONTRACTOR SHALL SUBMIT ALL TEST RESULTS TO THE DESIGN ENGINEER AND GOVERNMENTAL AGENCIES.
3. CONTRACTOR SHALL SUBMIT A SCHEDULE, APPROVED IN WRITING BY A QUALIFIED CONSULTING TESTING AGENCY, FOR FREQUENCY, LOCATION, AND TYPE OF ALL PROJECT TESTING. THE CONTRACTOR WILL BE RESPONSIBLE FOR SCHEDULING AND COORDINATION OF ALL TESTING INCLUDING THE FOLLOWING TERMS WHICH SHALL BE TESTED IN ACCORDANCE WITH MAG SPECIFICATIONS:
   - 3.1. SUBGRADE COMPACTION
   - 3.2. BASE COURSE COMPACTION
   - 3.3. ASPHALT PAVEMENT MIX DESIGN QUALITY
   - 3.4. CONCRETE STRENGTH
   - 3.5. TRENCH BEDDING AND BACKFILL
   - 3.6. TESTING FOR UTILITIES, PIPING, AND DRAINAGE SYSTEMS

UTILITIES

1. A UTILITY COORDINATION MEETING SHALL BE COORDINATED BY THE CONTRACTOR PRIOR TO THE START OF ANY WORK. ALL UTILITY ISSUES SHALL BE ADDRESSED IN ACCODANCE WITH MAG 105.6.
2. LOCATION OF UNDERGROUND UTILITIES SHALL BE ACCOMPLISHED IN ACCORDANCE WITH ARS 40-360.22 PRIOR TO ANY EXCAVATION. BLUE STAKE SHALL BE CALLED AT 1-800-STAKE-IT FOR ACCURATE LOCATION OF UTILITIES AS NECESSARY AND PRIOR TO AN EXCAVATION. UTILITIES IF INDICATED ON PLANS ARE APPROXIMATE LOCATIONS ONLY, TAKEN FROM THE UTILITY COMPANY MAPS. IF THE CONTRACTOR ENCOUNTERS ANY LINES NOT INDICATED ON THE DRAWINGS OR MARKED IN THE FIELD BY THE UTILITY COMPANY THAT MAY INTERFERE WITH HIS WORK, HE SHALL NOTIFY THE APPROPRIATE UTILITY COMPANY IMMEDIATELY FOR DISPOSITION OF THOSE FACILITIES.
3. UTILITIES MUST BE LOCATED TO MINIMIZE INTERFERENCE WITH ONE ANOTHER, TO PROVIDE REQUIRED HORIZONTAL AND VERTICAL SEPARATIONS, AND TO PROVIDE MAINTENANCE ACCESS WITHOUT VIOLATING EASEMENT BOUNDARIES. SEPARATION BETWEEN UTILITIES PER MAG STANDARD.
4. ALL WATER MAINS, APPURTENANCES, AND INSTALLATIONS SHALL CONFORM TO A.W.W.A. STANDARDS AND ARIZONA DEPARTMENT OF ENVIRONMENTAL QUALITY AND TOWN OF JEROME REQUIREMENTS. WATER SYSTEMS SHALL BE TESTED PER A.D.E.Q. BULLETIN NO. 10 TO THE APPROPRIATE A.W.W.A. STANDARDS.

CONSTRUCTION STAKING

1. THE ACCURACY OF ALL CONSTRUCTION WORK SHALL BE MAINTAINED AND VERIFIED BY THE OWNER'S SURVEYOR AT THE OWNER'S EXPENSE BY PROVIDING CONSTRUCTION STAKING SUITABLE TO THE TOWN ENGINEER. STAKES WILL BE SET ESTABLISHING LINES AND GRADES (FINISH OR FLOWLINE) FOR ALL CONSTRUCTION INCLUDING ROADS, CURB AND GUTTER, SIDEWALKS, UTILITIES, STRUCTURES, AND OTHER WORK AS CONSIDERED NECESSARY BY THE ENGINEER. ALL SURVEY CONTROL SHALL BE SET BY THE OWNER'S SURVEYOR FROM MONUMENTS ACCEPTABLE TO THE ENGINEER.

GRADING AND EARTHWORK

1. NO GRADING OR TRENCHING WORK SHALL BEGIN PRIOR TO SUPPORTING AND PROTECTING EXISTING ONSITE AND ADJACENT PROPERTY FROM SETTLING, CRACKING, OR OTHER DAMAGE WHICH MIGHT RESULT. CONTRACTOR SHALL VERIFY FROM SOILS REPORT RECOMMENDATIONS THE DEGREE OF DIFFICULTY REQUIRED FOR TRENCHING AND EXCAVATION WORK BASED ON DEPTH AND TYPE OF MATERIALS TO BE ENCOUNTERED.
2. CLEARING AND GRUBBING: EXAMINE SITE AND PROVIDE NECESSARY EQUIPMENT AND LABOR TO REMOVE FROM THE SITE AND DISPOSE OF STUMPS, ROOTS, ROCKS, LOOSE FILL, VEGETATION DEBRIS, AND ANY OTHER OBJECTIONABLE MATERIALS FROM THE BUILDING AND MATERIAL. CLEAN. UNCLASSIFIED ONSITE SOILS MAY BE USED IN GENERAL AS FILL MATERIAL. SEE MAG SPECIFICATIONS 201 AND 215.
3. SUBGRADE PREPARATION: IF THE NATURAL SUBGRADE IS LESS THAN THE REQUIRED DENSITY, IT SHALL BE SCARIFIED AND COMPACTED TO A MINIMUM DEPTH OF TWELVE INCHES OR AS NOTED IN THE SOILS REPORT IMMEDIATELY PRIOR TO PLACING SUBSEQUENT FILL MATERIAL THEREON. THE CONTRACTOR IS RESPONSIBLE FOR MAINTENANCE AND REPAIR OF DAMAGE TO PREPARED SUBGRADE CAUSED BY CONTRACTOR'S OPERATIONS OR PUBLIC TRAFFIC UNTIL ACCEPTANCE OF PROJECT. NO MATERIALS SHALL BE PLACED UPON THE PREPARED SUBGRADE UNTIL IT MEETS THE SPECIFIED REQUIREMENTS. ROADWAY SUBGRADE COMPACTION INCLUDES SUBGRADE UNDER ALL PAVEMENT, CURB, SIDEWALKS, SHOULDERS, AND FILL SLOPES. SUBGRADE TOLERANCES SHALL BE AS SPECIFIED IN MAG SECTION 301. OPEN LANDSCAPED AREAS SHALL BE GRADED TO ±0.2 FEET.
4. IT IS THE RESPONSIBILITY OF THE CONTRACTOR TO CONTACT THE TESTING COMPANY FOR SCHEDULING OF COMPACTION TESTING. THE FREQUENCY OF DENSITY AND MOISTURE TESTS REQUIRED FOR ADEQUATE CONTROL SHALL BE THE RESPONSIBILITY OF THE SOILS ENGINEER WHO SHALL CERTIFY TO THE ENGINEER AND CONTRACTOR AT PROJECT END THAT THE ROADBED FILL IS COMPACTED AS OUTLINED HEREIN. COMPACTION SHALL BE ACHIEVED BY MECHANICAL MEANS. IN NO CASE SHALL STRUCTURE BACKFILLING BE FLOOD WATER SETTLED.
5. ALL SLOPE CONSTRUCTION AND ROADWAY EXCAVATION SHALL CONFORM TO THE REQUIREMENTS OF MAG SPECIFICATIONS SECTIONS 20, 205, 211, 301, AND UBC SECTIONS 7009 AND 8010. CUT AND FILL SLOPES SHALL BE AS INDICATED ON THE DETAILS AND PLANS. CUT AND FILL SLOPE GRADIENTS SHALL NOT EXCEED 2:1 IN STEEPNESS WITHOUT WRITTEN AUTHORIZATION FROM THE SOILS ENGINEER AND EXAMINATION BY THE DESIGN ENGINEER. ALL SLOPE CONDITIONS SHALL BE PROVIDED WITH THE APPROPRIATE BENCHES AS SPECIFIED IN THE REFERENCE DOCUMENTS AND INDICATED ON THE PLANS. IF SOILS CONDITIONS ARE ENCOUNTERED WHICH DO NOT ALLOW THE ESTABLISHMENT OF THE INDICATED CUT OR FILL SLOPES, THE DESIGN ENGINEER AND SOILS ENGINEER SHALL BE CONTACTED IMMEDIATELY TO DETERMINE AN ADJUSTMENT TO THE SLOPE GRADIENT OR TO ESTABLISH A METHOD OF STABILIZATION. ALL FILL SLOPES SHALL BE COMPACTED AS EACH LIFT OF FILL MATERIAL IS PLACED. ALL CUT AND FILL SLOPES SHALL BE UNIFORMLY GRADED TO LINES AND GRADES INDICATED. TOPS OF ALL CUT SLOPES SHALL BE ROUNDED AND ALL UNSTABLE AND LOOSE MATERIAL AT TOP OF SLOPE SHALL BE REMOVED. TOP OF CUT SLOPES OVER 10' HIGH SHALL BE PROVIDED WITH BRO DITCHES FOR DRAINAGE. ALL CUT AND FILL SLOPES SHALL BE REVEGETATED WITH A MIXTURE OF NATIVE GRASSES AND WILD FLOWER SEED OR AS SPECIFIED WITHIN THE LANDSCAPE PLANS. COMPACT ALL SHOULDERS AND BACKFILLS BEHIND ALL STRUCTURES AND WALLS.
6. COMPACT TO THE FOLLOWING SPECIFIED PERCENT OF MAXIMUM DENSITY AS DETERMINED IN ACCORDANCE WITH ASTM D698 AND MAG SECTION 211 OR AS DIRECTED IN THE SOILS REPORT.

MINIMUM PERCENT COMPACTION

SUBGRADE SOIL:

ROADWAY AND STRUCTURE AREAS - - - - - - - - - - - - - -95

PAVED AREAS (PAVEMENTS, SIDEWALKS, & PADS) - - 95

EARTH FILL:

ROADWAY AND STRUCTURE AREAS - - - - - - - - - - - - - -95

PAVED ARES (PAVEMENTS, SIDEWALKS, & PADS) - - - 95

GRASSED AND PLANTING AREAS - - - - - - - - - - - - - - - - 85

AGGREGATE BASE COURSE - - - - - - - - - - - - - - - - - - - 100

BACKFILL AROUND STRUCTURES - - - - - - - - - - - - - - - -95

BACKFILL FOR UTILITY TRENCHES (PER MAG SECTION 601). PROVIDE TYPE 1 BACKFILL OR AS DIRECTED BY APPROPRIATE UTILITY REQUIREMENTS. BACKFILL FOR TRENCHES WITHIN 10' OF STRUCTURES AND WALLS SHALL BE COMPACTED TO 95% UNLESS DIRECTED OTHERWISE BY ENGINEER.

100% ISSUED FOR BID

NO	BY	DATE	REVISIONS	DATE	APP.

Registered Professional Engineer (Civil) CERTIFICATE NO. 70097 TAYLOR B. PIERCE Date Signed 10/31/25 ARIZONA, U.S.A.
Expires 12/31/28

PREPARED BY: PACE
DESIGNED BY: NE
DRAWN BY: DS, WW
CHECKED BY: TP
SCALE: AS NOTED
DATE NOV 2025
JOB NO. B614

TITLE
GENERAL NOTES AND ABBREVIATIONS

JOB
TOWN OF JEROME
WASTEWATER TREATMENT PLANT
YAVAPAI CO. AZ

PREPARED BY:
PACE
Advanced Water Engineering
8723 E. VIA de COMMERICO, SUITE A-204 | SCOTTSDALE, CA 85258
P: (408) 991-3595 | www.pacewater.com

TAYLOR B. PIERCE R.C.E 70097 DATE

SHEET
G2.0
3 OF 99 SHEETS
JOB NO. B614

THESE DRAWINGS ARE THE PROPERTY OF P.A.C.E. AND SHALL NOT BE REPRODUCED IN ANY MANNER NOR BE USED FOR CONSTRUCTION UNLESS STAMPED "ISSUED FOR CONSTRUCTION".

W:\B614\Engineering\B614-30\sheets\B614 - G2.0 GENERAL NOTES.dwg - Tab: G2.0 - by neddington on 11/18/25 at 3:11:17 PM

Item I.

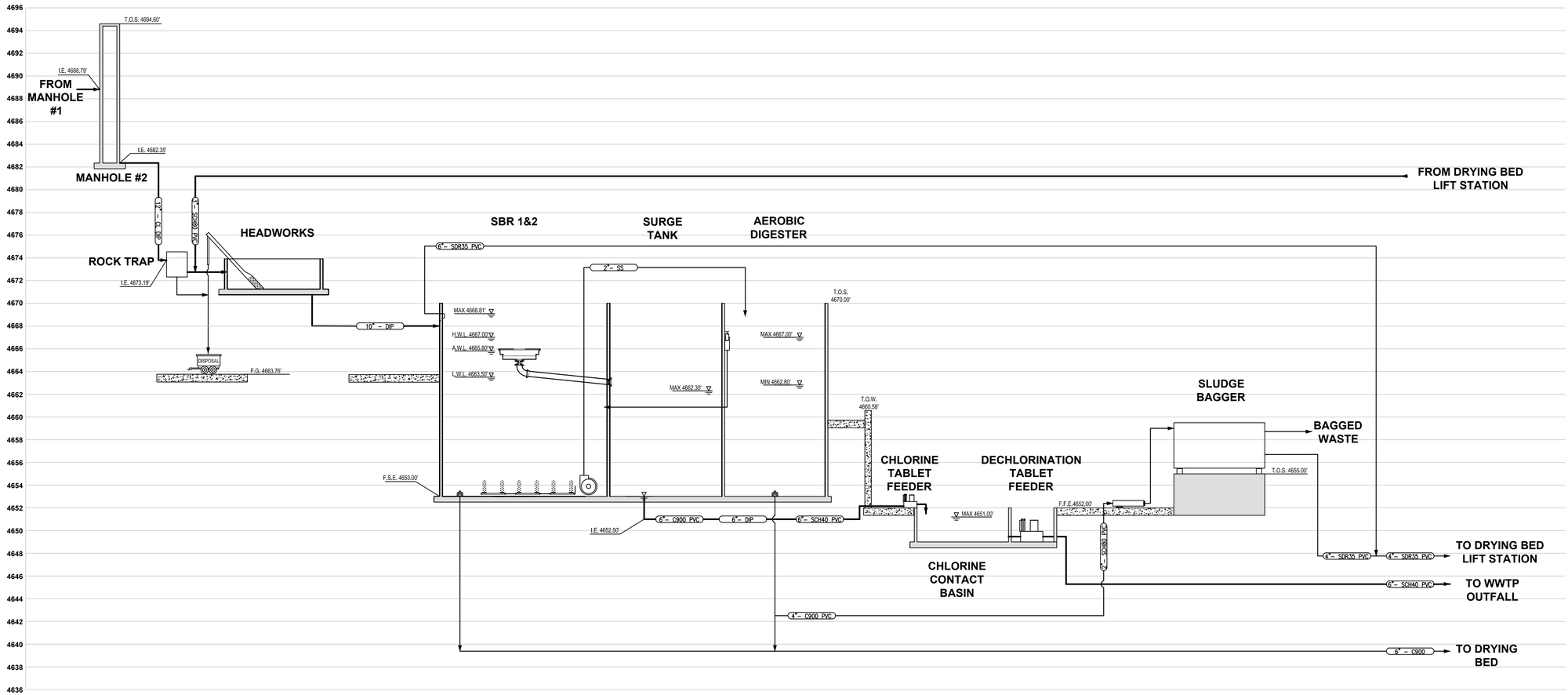

LEGEND

- PUMP
- ROTARY LOBE PUMP
- SLIDE/WEIR GATE
- TELESCOPING VALVE
- MUD VALVE
- PRIMARY FLOW
- SECONDARY FLOW

NO	BY	DATE	REVISIONS	DATE	APP.

Registered Professional Engineer (Civil) CERTIFICATE NO. 70097 TAYLOR B. PIERCE Signed ARIZONA, U.S.A. Expires 12/31/28

PREPARED BY: PACE
DESIGNED BY: NE
DRAWN BY: DS, WW
CHECKED BY: TP
SCALE: AS NOTED
DATE: NOV 2025
JOB NO.: B614

THESE DRAWINGS ARE THE PROPERTY OF P.A.C.E. AND SHALL NOT BE REPRODUCED IN ANY MANNER NOR BE USED FOR CONSTRUCTION UNLESS STAMPED 'ISSUED FOR CONSTRUCTION'.

TITLE: HYDRAULIC PROFILE

JOB: TOWN OF JEROME
WASTEWATER
TREATMENT PLANT
YAVAPAI CO. AZ

100% ISSUED FOR BID

PREPARED BY: TAYLOR B. PIERCE R.C.E 70097 DATE
PACE Advanced Water Engineering
8723 E. Via de Commercio, Suite 2-A4 Anaheim Hills, CA 92808
P. (408) 991-3995 | www.pacewater.com

SHEET
G3.0
4 OF 99 SHEETS

JOB NO. B614

W:\B614\Engineering\B614-30\sheets\B614-G3.0 HYDRAULIC PROFILE.dwg - Tab: G3.0 - by reddington on 03/02/26 at 9:52:17 AM

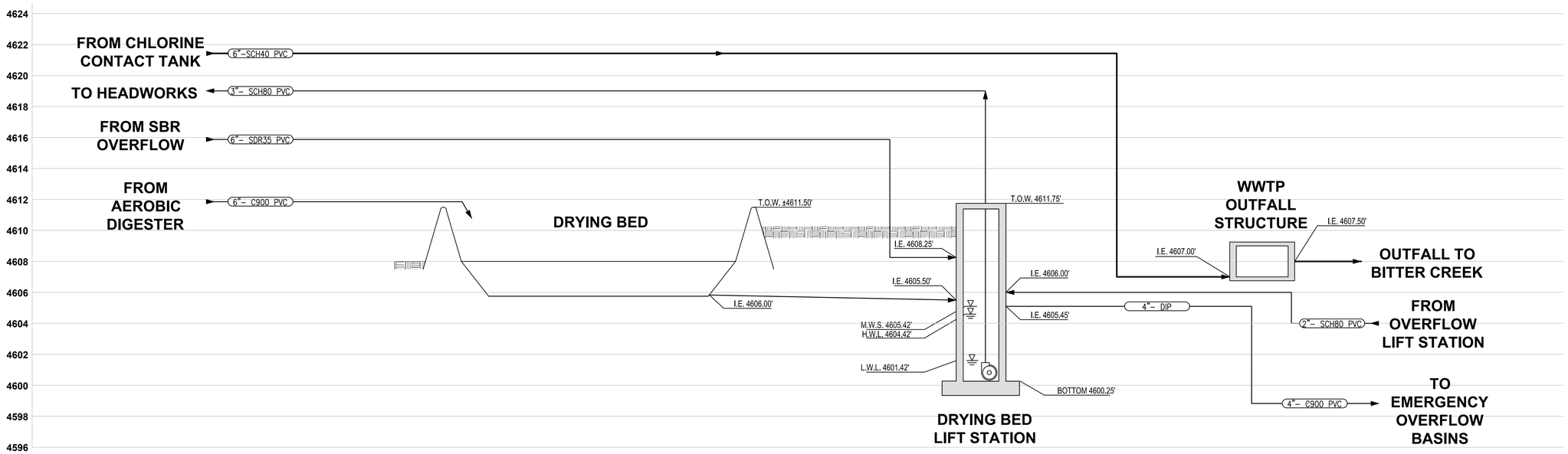

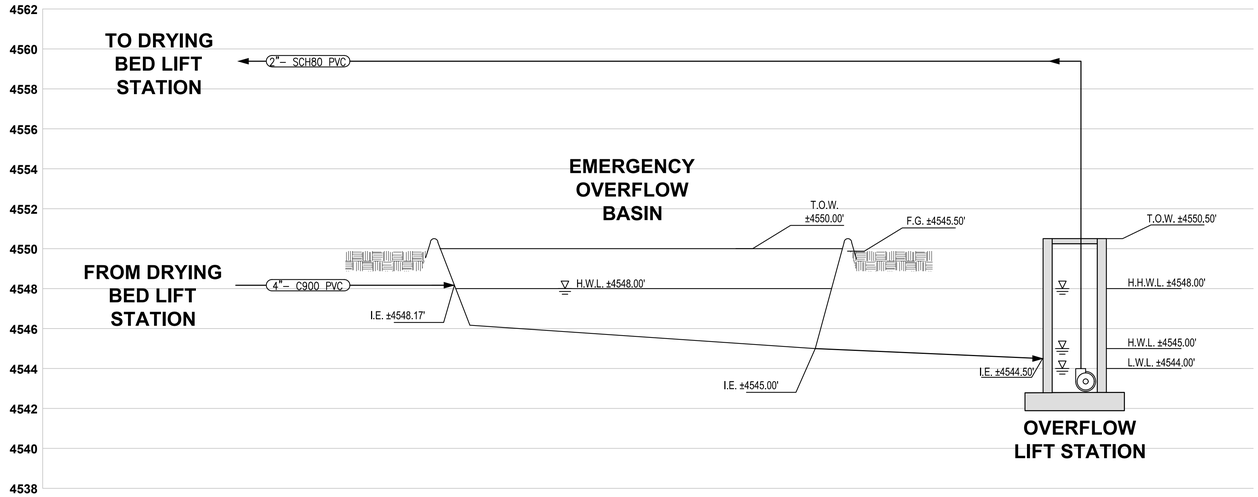

LEGEND

- PUMP
- ROTARY LOBE PUMP
- SLIDE/WEIR GATE
- TELESCOPING VALVE
- MUD VALVE
- PRIMARY FLOW
- SECONDARY FLOW

100% ISSUED FOR BID

NO	BY	DATE	REVISIONS	DATE	APP.

Registered Professional Engineer (Civil) CERTIFICATE NO. 70097 Timothy B. Pierce Signed on ARIZONA, U.S.A. Expires 12/31/28

THESE DRAWINGS ARE THE PROPERTY OF P.A.C.E. AND SHALL NOT BE REPRODUCED IN ANY MANNER NOR BE USED FOR CONSTRUCTION UNLESS STAMPED 'ISSUED FOR CONSTRUCTION'.

PREPARED BY: PACE
DESIGNED BY: NE
DRAWN BY: DS, WW
CHECKED BY: TP
SCALE: AS NOTED
DATE: NOV 2025
JOB NO.: B614

TITLE: HYDRAULIC PROFILE

JOB: TOWN OF JEROME WASTEWATER TREATMENT PLANT — YAVAPAI CO. AZ

PREPARED BY: TAYLOR B. PIERCE — R.C.E. 70097 — DATE

PACE
Advanced Water Engineering
8723 E. VIA de COMMERCIO, BLDG. A, SCOTTSDALE, CA 85258
P: (480) 991-3595 | www.pacewater.com

SHEET G3.1
5 OF 99 SHEETS

JOB NO. B614

W:\B614\Engineering\B614-3\Sheets\B614-G3.0-HYDRAULIC PROFILE.dwg - Tab: G3.1 - by roddington on 03/02/26 at 9:52:17 AM

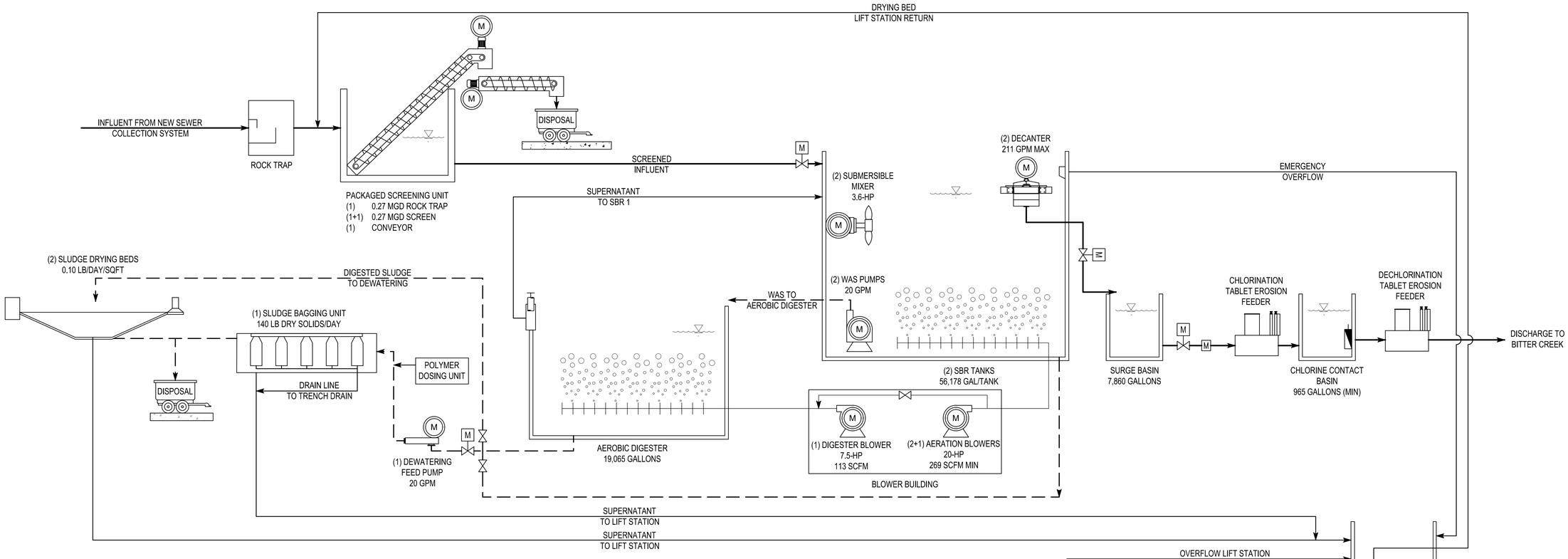

EQUIPMENT LIST

ITEM	ID #	DESCRIPTION	MANUFACTURER	MODEL #	HP	SPECIFICATIONS / DESCRIPTION	QTY
1	03010A 03010B	INFLUENT COARSE SCREEN	OR-TEC OR EQUAL	MB480T2 W/ RT	0.16	TANK MOUNTED MECHANICALLY CLEANED BAR SCREEN WITH TWO INDEPENDENT 6MM SCREENING CHANNELS W/ ISOLATING SLIDE GATE & SST ENCLOSURE, PROVIDED WITH SEPERATE ROCK TRAP W/ BAFFLE AND OUTLET WEIR. 480V, 3 PHASE, 60HZ. 0.27 MGD PEAK FLOW	1
2	05120 05121	SBR INFLUENT PLUG VALVES	BY SBR VENDOR		0.5	ELECTRICALLY ACTUATED 10" PLUG VALVE W/ OPEN/CLOSE SERVICE. 120V, 1 PHASE, 60 HZ	2
3	05110 05112	SBR SUBMERSIBLE MIXERS	BY SBR VENDOR		3.6	PREMIUM EFFICIENCY CONSTANT SPEED DIRECT DRIVE MOTOR MIXER W/ MAST MOUNT AND MOORING, 480V, 3 PHASE, 60HZ.	2
4	04310 04311 04312	SBR AERATION BLOWERS	BY SBR VENDOR		20	VFD CONTROLLED PD BLOWER UNIT W/ SOUND ATTENUATED ENCLOSURE, 361 SCFM @ 6.63 PSI, 480V, 3 PHASE, 60HZ.	3
5	04313	DIGESTER AERATION BLOWER	BY SBR VENDOR		7.5	VFD CONTROLLED PD BLOWER UNIT W/ SOUND ATTENUATED ENCLOSURE, 110 SCFM @ 6.63 PSI, 480V, 3 PHASE, 60HZ. CONTROLLED	1
6	04180 04181	RETREIVABLE FINE BUBBLE DIFFUSER SYSTEM	BY SBR VENDOR		N/A	RETRIEVABLE DIFFUSER RACK ASSEMBLY WITH MIN 30" EPDM TUBE DIFFUSERS, RANGE 1.0 CFM - 10.0 CFM (1 - 5 SCFM DESIGN) 2/ W EPDM FLEXIBLE DROP LINE AND QUICK DISCONNECT FITTINGS	60
7	04280	COARSE BUBBLE DIFFUSER SYSTEM	BY SBR VENDOR		N/A	3" EPDM DISK COARSE BUBBLE DIFFUSERS, RANGE 0.5 CFM - 5.0 CFM (0.5 - 2 SCFM DESIGN) 3/8" CXN	12
8	05100 05101	WAS TRANSFER PUMPS	BY SBR VENDOR		1.8	20 GPM @ 15' TDH SUBMERSIBLE NON-CLOG SLUDGE PUMP, 1.8 HP 480V, 3 PHASE, 60HZ W/ BASE AND SS GUIDE RAIL	2
9	05111 05113	SOLIDS EXCLUDING FLOATING DECANTER	BY SBR VENDOR		0.5	211 GPM FLOATING DECANTER W/ 120V, 1 PHASE, 60 HZ ACTUATED SUBMERGED WEIR, MOORING AND 6" DISCHARGE HOSE ASSEMBLY	2
10	05121 05123	SBR DECANT VALVE	BY SBR VENDOR		0.33	ELECTRICALLY ACTUATED 6" BUTTERFLY VALVE W/ MODULATING SERVICE, 480V, 3 PHASE, 60HZ	2
11	06221	TRANSFER/EFFLUENT VALVE	BY SBR VENDOR		0.33	ELECTRICALLY ACTUATED 6" BUTTERFLY VALVE W/ MODULATING SERVICE, 480V, 3 PHASE, 60HZ	1
12	06290	CHLORINATION EROSION TABLET FEEDER	NORWECO OR EQUAL	SERIES 4000	N/A	6" SCH 80 PVC HUB TABLET FEEDER W/ ADJUSTABLE INLET BAFFLE AND OUTLET WEIR AND 24" RISER ASSEMBLIES	1
13	05291	DECHLORINATION EROSION TABLET FEEDER	NORWECO OR EQUAL	SERIES 4000	N/A	6" SCH 80 PVC HUB TABLET FEEDER W/ ADJUSTABLE INLET BAFFLE AND OUTLET WEIR AND 24" RISER ASSEMBLIES	1
14	08400	DEWATERING FEED PUMP	BOERGER OR EQUAL	AN 40	3.0	20 GPM ROTARY LOBE SLUDGE PUMP, 3 HP 480V, 3 PHASE, 60HZ	1
15	08410	DRY POLYMER MAKE-DOWN AND FEED UNIT	PROMINENT OR EQUAL	ULTROMAT MT 140	0.25	POLYPROPOLENE PREP TANK W/ ELECTRIC STIRRER, WETTING CONE AND INJECTOR 480V, 3 PHASE, 60 HZ	1
16	08401	POLYMER METERING PUMP	PROMINENT OR EQUAL	DULCOFLEX - DFXa 0530	0.16	0.08 - 7.93 GPH SHELF-MOUNTED PERISTALTIC METERING PUMP, 73 PSI MAX BACK PRESSURE, 1/2" x 3/8" POLYURETHANE CONNECTOR TUBING, 115V, 1-PH SERVICE	1
17	08490	SLUDGE BAGGER SYSTEM	ENVIRODYNE, OR EQUAL	585-8i	N/A	20 GPM 8-BAG SLUDGE DEWATERING SYSTEM MAX LOADING RATE OF 20 GPM OR 100 #/HR - 25# ACTIVE POLYMER / TON DS	1
18	07400	DRYING BED DRAIN RETURN PUMPS	GRUNDFOS OR EQUAL	SEG.A15.40.EX.2.60H	4.16	70 GPM @ 90' TDH SUBMERSIBLE GRINDER PUMP, 5 HP 480V, 3 PHASE, 60HZ W/ BASE AND SS GUIDE RAIL	2
19	07401	PACKAGED OVERFLOW LIFT STATION	E ONE OR EQUAL	SP84S	2	31 GPM @ 82' TDH SDUPLEX GRINDER PRE-PACKAGED PUMP STATION, 2 HP 240V, 1 PHASE, 60 HZ W/ INTEGRAL FLOAT CONTROLS, PANEL AND SINGLE WARNING BEACON	1
20	SEE PID	PRESSURE TRANSDUCER	BY SBR VENDOR		N/A	304 SS SUBMERSIBLE PRESSURE TRANSDUCER WITH 4-20 mA SIGNAL OUTPUT	4
21	SEE PID	LEVEL SENSOR	BY SBR VENDOR		N/A	316 SS FLOAT SWITCH WITH THREE-CONDUCTOR ELECTRICAL CABLE	4
22	05160A 05161A	DISSOLVED OXYGEN CONTROLLER	BY SBR VENDOR		N/A	NEMA 4X ENCLOSURE WITH AC 100-230 VAC POWER SUPPLY, 4-20 mA SIGNAL OUTPUT	2
23	05160B 05161B	DISSOLVED OXYGEN PROBE	BY SBR VENDOR		N/A	304 SS PROBE	2
24	06240	EFFLUENT FLOW METER	BY SBR VENDOR		N/A	6" ELECTROMAGNETIC FLOW METER W/ TRAMSMITTER, ±1%ACCURACY 5D/3D, WITH 4-20 mA SIGNAL OUTPUT	1
25	01003	STANDBY GENERATOR			N/A	600 KW STANDBY GENERATOR W/ SOUND ATTENUATED OUTDOOR ENCLOSURE AND SUB BASE FUEL TANK	1

DESIGN FLOWS:

MAX MONTH AVE DAY FLOW:	90,000 GPD
MAX PEAK DAY FLOW:	135,000 GPD
PEAK HOUR FLOW:	270,000 GPD

INFLUENT PARAMETERS:

BOD:	360 MG/L
TSS:	250 MG/L
TKN:	40 MG/L

EFFLUENT PARAMETERS:

BOD:	<30 MG/L
TSS:	<30 MG/L
TN:	<10 MG/L
FECAL COLIFORM:	200 CFU/100 ML (4/7 SAMPLES); 800 CFU/100 ML (SINGLE SAMPLE MAX)

LEGEND

- FLOW METER
- PUMP
- BLOWER
- ROTARY LOBE PUMP
- ISOLATION VALVE/GATE
- MOTORIZED VALVE
- SLIDE/WEIR GATE
- TELESCOPING VALVE
- MIXER
- PRIMARY FLOW
- SECONDARY FLOW
- SLUDGE FLOW

100% ISSUED FOR BID

NO	BY	DATE	REVISIONS	DATE	APP.

Registered Professional Engineer (Civil) CERTIFICATE NO. 70097 TAYLOR B. PIERCE Signed ARIZONA, U.S.A. Expires 12/31/28

THESE DRAWINGS ARE THE PROPERTY OF P.A.C.E. AND SHALL NOT BE REPRODUCED IN ANY MANNER NOR BE USED FOR CONSTRUCTION UNLESS STAMPED "ISSUED FOR CONSTRUCTION".

PREPARED BY: PACE
DESIGNED BY: NE
DRAWN BY: DS, WW
CHECKED BY: TP
SCALE: AS NOTED
DATE: NOV 2025
JOB NO.: B614

TITLE: PROCESS FLOW DIAGRAM

JOB: TOWN OF JEROME WASTEWATER TREATMENT PLANT — YAVAPAI CO. AZ

PREPARED BY:
PACE
Advanced Water Engineering
8733 E. Via de Ventura, Suite 210, SCOTTSDALE, CA 85258
P: (480) 991-3995 | www.paceadvisor.com
TAYLOR B. PIERCE R.C.E 70097 DATE

SHEET
G3.2
6 OF 99 SHEETS

JOB NO. B614

W:\B614\Engineering\B614-30\sheets\B614-G3.0 HYDRAULIC PROFILE.dwg - Tab: G3.2 - by reddington on 03/02/26 at 9:32:17 AM

1 GENERAL

1.1 ALL PAVING, GRADING PIPING AND UTILITY LINE CONSTRUCTION WORK WITHIN THE PUBLIC RIGHT-OF-WAY, ON PRIVATE STREETS, ACCESS WAYS, LOT GRADING, MATERIALS, AND WORKMANSHIP SHALL COMPLY WITH TOWN OF JEROME ENGINEERING STANDARDS AND SPECIFICATIONS, AND SHALL CONFORM TO THE LATEST MARICOPA ASSOCIATION OF GOVERNMENTS (MAG) AND A.D.O.T. STANDARD DETAILS AND SPECIFICATIONS. GRADING WORK SHALL CONFORM TO MAG SPECS, THE SOILS REPORT* AND CHAPTER 70 ENTITLED "EXCAVATION AND GRADING" OF THE UNIFORM BUILDING CODE (UBC) LATEST EDITION, SUBSECTIONS 7001 TO 7005, 7009 TO 7013, FIGURES 70-1 AND 70-2 AND AS STATED THEREIN. LOCAL MUNICIPAL STANDARD DETAILS WILL CONTINUE TO APPLY WHERE NOT ADOPTED OR INCLUDED BY MAG. THE FOLLOWING NOTES AND SPECIFICATIONS ARE HEREBY MADE A PART OF THE CONTRACT DOCUMENTS AND PROJECT SPECIFICATIONS. WHERE THERE EXISTS A CONFLICT BETWEEN THESE NOTES, MAG SPECS, UBC, THE SOILS REPORT* OR THE PROJECT SPECIFICATIONS, THE MORE STRINGENT OF THE REQUIREMENTS SHALL GOVERN UNLESS PRIOR CLARIFICATION FROM THE ENGINEER HAS BEEN GIVEN IN WRITING TO THE CONTRACTOR. THE CONTRACTOR AS STATED HEREIN SHALL MEAN THE GENERAL CONTRACTOR AND HIS ASSOCIATED SUBCONTRACTORS. THE GENERAL CONTRACTOR IS RESPONSIBLE FOR THE COORDINATION AND PERFORMANCE OF THE WORK OF ALL OF HIS SUBCONTRACTORS AND SUPPLIERS.

1.2 ALL WORK SHALL BE BID AND INSTALLED BY THE CONTRACTOR COMPLETE AND OPERATIONAL TO LINES, GRADES AND FUNCTIONS INDICATED ON ALL PLANS AND SPECIFICATIONS. PROVIDE ALL LABOR, MATERIALS, EQUIPMENT AND SERVICES NECESSARY TO COMPLETE ALL PROJECT EARTHWORK AND SITE WORK INCLUDING BUT NOT LIMITED TO: SITE CLEARING, GRUBBING, DEMOLITION'S, DEBRIS REMOVALS FROM THE SITE, IMPORT AND/OR EXPORT OF SOILS AND OTHER MATERIALS TO AND FROM THE SITE, BORROW MATERIALS, TEMPORARY SOILS MATERIAL STOCKPILING, BACKFILL OF ONSITE BORROW PITS, MOVING OF MATERIALS, CUT AND FILL, SLOPES, SOILS AND BANK STABILIZATION AND PROTECTION, BERMING, ROADWAY EXCAVATIONS, RELOCATION'S, STRUCTURE EXCAVATIONS, TRENCHING, ALL BACKFILLING, SITE GRADING, PAVING, PIPING, UTILITY LINE AND STORM DRAINAGE CONSTRUCTION, CURBS, SITE CONCRETE WORK AND OTHER MISCELLANEOUS SITE WORK STRUCTURES AND ITEMS INDICATED ON THE PLANS AND IN THE CONTRACT DOCUMENTS.

1.4 ANY QUANTITIES SHOWN ON PLANS ARE NOT VERIFIED BY THE ENGINEER. QUANTITIES ARE APPROXIMATE ONLY AND INTENDED AS A GUIDE FOR ESTIMATING PURPOSES. THE CONTRACTOR IS RESPONSIBLE FOR PROVIDING HIS OWN QUANTITY TAKE OFFS. THE CONTRACTOR SHALL VISIT THE SITE AND REVIEW THE SOILS CONDITIONS AND THE SOILS REPORT* WITH THE PROJECT SOILS ENGINEER PRIOR TO BIDDING THIS PROJECT. ANY DISCREPANCIES IN SITE MATERIALS SHALL BE BROUGHT TO THE ATTENTION OF THE DESIGN ENGINEER 7 DAYS MINIMUM PRIOR TO BIDDING FOR REVIEW. ALL SHRINK OF EARTH MATERIAL OR EXCESS MATERIAL FROM UTILITY TRENCHES AND FOUNDATIONS SHALL BE INCLUDED IN THE CONTRACTOR'S BID.

1.5 THE ENGINEER MAY REQUIRE THE SUBMITTAL OF A "CERTIFICATE OF COMPLIANCE" AND/OR "MANUFACTURER'S GUIDELINES" FOR ANY MATERIALS USED IN THE WORK. MANUFACTURER'S GUIDELINES SHALL CONSISTS OF WRITTEN INSTRUCTIONS FOR SHIPPING, HANDLING, UNLOADING, CUTTING, JOINING, INSTALLATION, STORAGE, AND/OR ANY OTHER FACETS OF CONSTRUCTION

1.6 THE ENGINEER MAY REQUIRE ANY MATERIALS USED IN THE WORK TO BE TESTED ACCORDING TO AASHTO AND ASTM STANDARDS. THE CONTRACTOR SHALL, AT HIS EXPENSE, SUPPLY CERTIFICATES OR RESULTS OF TESTING.

1.7 ALL WORK AND MATERIALS NOT CONFORMING TO SPECIFICATIONS OR PERFORMED WITHOUT THE CONSENT OF THE OWNER OR HIS REPRESENTATIVE WILL BE SUBJECT TO REJECTION BY THE OWNER AND/OR ENGINEER AND REPLACED AT THE CONTRACTOR'S EXPENSE.

1.8 THE CONTRACTOR SHALL GUARD AGAINST DAMAGE DURING CONSTRUCTION TO ADJACENT PROPERTIES, FENCES, WALLS AND UTILITY EQUIPMENT. ANY ITEMS DAMAGED BY CONSTRUCTION SHALL BE REPLACED WITH SAME KIND OR BETTER AT CONTRACTOR'S EXPENSE.

1.9 NO CONSTRUCTION SHALL BEGIN UNTIL CONFLICTING UNDERGROUND UTILITY MITIGATING CONSTRUCTION IS COMPLETED, IF ANY, AND UNTIL PIPE SLEEVES AND SERVICE STUBS TO ALL BUILDINGS OR LOTS HAVE BEEN EXTENDED.

1.10 NO EXISTING SURVEY MONUMENTATION SHALL BE REMOVED OR DISTURBED BY THE CONTRACTOR WITHOUT NOTIFICATION AND APPROVAL OF THE PROJECT SURVEYOR. THE CONTRACTOR SHALL CONTACT THE PROJECT SURVEYOR FOR THE SETTING OF REFERENCE POINTS 48 HOURS PRIOR TO DISTURBING OR REMOVING ANY MONUMENTS. THE CONTRACTOR SHALL BE FINANCIALLY RESPONSIBLE FOR COSTS TO REESTABLISH MONUMENTATION OR CONTROLS REMOVED WITHOUT PRIOR NOTICE AND APPROVAL.

1.11 TRAFFIC CONTROL SHALL CONFORM TO THE LOCAL MUNICIPAL ADOPTED STANDARDS.

1.12 THESE PLANS ARE SUBJECT TO THE INTERPRETATION OF THE INTENT BY THE ENGINEER. ANY QUESTIONS REGARDING THESE PLANS MUST BE GIVEN TO THE ENGINEER AND YOU MUST HAVE RECEIVED A RESPONSE TO THE QUESTION. ANYONE WHO TAKES IT UPON THEMSELVES TO MAKE AN INTERPRETATION OF THE DRAWINGS OR MAKES REVISIONS TO THE SAME WITHOUT CONFERRING WITH THE DESIGN ENGINEER SHALL BE RESPONSIBLE FOR THE CONSEQUENCES THEREOF.

1.13 CONTRACTOR SHALL COORDINATE HIS WORK WITH THE DESIGN ENGINEER, OWNER, PUBLIC UTILITY COMPANIES AND OTHER ASSOCIATED TRADES ON AND ADJACENT TO THE PROJECT SITE. COORDINATE INSTALLATION OF ALL PUBLIC AND PRIVATE UNDERGROUND UTILITIES, PIPES, CONDUITS AND PIPE SLEEVE SIZES AND LOCATIONS PRIOR TO THEIR PLACEMENT. INSTALLATION: THE CONTRACTOR IS RESPONSIBLE FOR SETTING CAPPED SLEEVES AND PROVIDING TYPE 1 COMPACTION IN ALL BACKFILLED TRENCHES IN PAVED AREAS AND EASEMENTS. PROVIDE TRACER WIRE AND MARKER AT GRADE LEVEL FOR FUTURE LOCATING.

1.14 CONTRACTOR SHALL BE RESPONSIBLE FOR FINANCIAL REIMBURSEMENT TO THE OWNER AND ENGINEER FOR THE FOLLOWING ADDITIONAL ENGINEERING SERVICES SHOULD THEY OCCUR, AND SUCH A/E DESIGN SERVICES WILL BE DEDUCTED FROM CONTRACTOR'S FINAL PAYMENTS BY THE OWNER.

A. REINSPECTION, COORDINATION AND EXTRA TESTING OR RETESTING COSTS INCURRED BECAUSE OF IMPROPER OR FAULTY CONSTRUCTION. ONE TIME TESTING AND INSPECTION IS PROVIDED FOR BY THE OWNER. ALL OTHER TESTING IS THE CONTRACTOR'S RESPONSIBILITY.

B. ADDITIONAL STAKING NOT INCLUDED IN CONTRACT OR RESTAKING AS REQUESTED BY CONTRACTOR.

C. CHANGES AND SUBSTITUTIONS IN MATERIALS CONSTRUCTION METHODS, REQUESTED BY THE CONTRACTOR, THAT MUST BE REVIEWED, RECALCULATED OR APPROVED BY ENGINEER.

D. ENGINEERING DESIGN SERVICES REQUESTED BY THE CONTRACTOR OR CAUSED BY ERRORS OR OMISSIONS BY THE CONTRACTOR.

E. ANY ENGINEERING DESIGN APPROVED BY OTHERS AND SUBMITTED FOR REVIEW. THESE SHALL BEAR THE SEAL OF AN ENGINEER REGISTERED IN ARIZONA.

ANY DIFFERENCE BETWEEN PLANS AND SPECIFICATIONS AND QUESTIONS AS TO THEIR MEANING SHALL BE DETERMINED PRIOR TO AWARD OF THE CONTRACT AND SHALL BE INTERPRETED BY THE ENGINEER. THE GENERAL INTENT AND MEANING OF THE PLANS AND SPECIFICATIONS WILL GOVERN AND SHALL NOT WARRANT ANY ADDITIONAL COMPENSATION TO THE CONTRACTOR. THE ENGINEER WILL PROVIDE FULL INSTRUCTIONS WHEN DISCREPANCIES ARE DISCOVERED IN THE DOCUMENTS.

1.16 THE CONTRACTOR SHALL BE RESPONSIBLE FOR VERIFYING THE LIMITS OF THE WORK AREA FOR ALL PHASES OF THE WORK PRIOR TO BEGINNING CONSTRUCTION OF THOSE PHASES. ALL CONSTRUCTION LIMITS, AREAS OF WORK, SETBACKS, PERIMETERS, ADJACENT PROPERTY LINES, BOUNDARIES, AND OTHER CRITERIA DEFINING THE LIMITS OF THE CONTRACTOR'S WORK AREA AND LIMITS, SHALL BE STAKED BY THE CONTRACTOR'S SURVEYOR PRIOR TO CONSTRUCTION OR CLEARING OF THE SITE. THE CONTRACTOR SHALL BE RESPONSIBLE FOR FAMILIARIZING HIMSELF WITH THE EXTENT OF WORK TO BE DONE IN EACH SEPARATE PHASE OF THE PROJECT, AND ANY WORK NECESSARY IN INACTIVE PHASES REQUIRED TO DEEM THE ACTIVE PHASES FINISHED, SAFE, AND SERVICEABLE.

1.17 THE CONTRACTOR OR SUBCONTRACTORS SHALL NOT DEVIATE FROM THESE PLANS OR MAKE FIELD CHANGES WITHOUT REQUESTING THE ENGINEER TO PROVIDE, IN WRITING, THE APPROVAL OF THESE MODIFICATIONS. ANY CHANGES MADE WITHOUT APPROVAL OF THE DESIGN ENGINEER ARE SUBJECT TO REMOVAL AT THE EXPENSE OF THE CONTRACTOR.

1.18 THE DESIGN ENGINEER RESERVES THE RIGHT TO MAKE MINOR FIELD MODIFICATIONS TO GRADES AND STRUCTURE DESIGNS TO ACCOMMODATE FIELD CONDITIONS FOUND ON SITE. THIS INCLUDES BUT IS NOT LIMITED TO MINOR MODIFICATIONS TO GRADE, ALIGNMENT, SLOPE OR STRUCTURE LOCATIONS. THE ENGINEER SHALL HAVE THE RIGHT TO MAKE SUCH CHANGES IN WRITING IN THE LOCATION AND QUANTITIES OF WORK AS MAY BE DEEMED ADVISABLE.

1.19 NO JOB WILL BE CONSIDERED COMPLETE UNTIL FINE GRADING IS COMPLETE AND ALL CURBS, PAVEMENT AND SIDEWALKS HAVE BEEN SWEPT CLEAN OF ALL DIRT AND DEBRIS, ALL SURVEY MONUMENTS ARE INSTALLED AND ALL VALVES, MANHOLES AND BOXES HAVE BEEN ADJUSTED ACCORDING TO THE PLANS AND STANDARD DETAILS.

1.20 EXISTING GRADES INDICATED ON PLANS ARE BASED ON PREGRADING CONDITIONS. LOSSES IN MATERIAL DUE TO SHRINKAGE OF MATERIAL, DEMOLITION OF EXISTING SITE FEATURES, CLEARING AND GRUBBING OF THE SITE SHALL BE INCLUDED IN CONTRACTOR'S BID.

1.21 SHOP DRAWINGS SHALL BE PROVIDED BY THE CONTRACTOR PER MAG SECTION 105.2.

2 PERMITS

2.1 CONTRACTOR SHALL OBTAIN ALL PERMITS AT HIS OWN EXPENSE FROM LOCAL MUNICIPAL AND AIR POLLUTION CONTROL AUTHORITIES PRIOR TO BEGINNING CONSTRUCTION.

2.2 REQUIRED PERMITS SHALL BE SECURED BY THE CONTRACTOR FROM THE APPROPRIATE AGENCIES. A.D.O.T. REQUIRES THAT A PERMIT BE ISSUED FROM THEIR OFFICE FOR ANY WORK WITHIN STATE RIGHT-OF-WAY. FEDERAL PERMITS, UTILITY CO. AND OTHER PERMITS MAY BE REQUIRED. A.D.E.Q. REQUIRES PERMITS BE ISSUED PRIOR TO NEW CONSTRUCTION, EXTENSION TO, OR MODIFICATION OF WATER DISTRIBUTION SYSTEM, SEWAGE COLLECTION OR INDIVIDUAL SEWAGE TREATMENT SYSTEM. A RIGHT-OF-WAY PERMIT, ISSUED BY THE TOWN, IS REQUIRED FOR ANY EXCAVATION OR GRADING (INCLUDING PLACEMENT OF FILL). PRIOR TO CONSTRUCTION THE APPROPRIATE AGENCIES SHALL BE NOTIFIED BY THE CONTRACTOR AS REQUIRED BY THE PERMITS.

2.3 THE CONTRACTOR SHALL BE RESPONSIBLE FOR OBTAINING AT HIS OWN EXPENSE ALL APPROPRIATE INSURANCE FORMS FOR PERMIT REQUIREMENTS.

2.4 IT SHALL BE THE RESPONSIBILITY OF THE CONTRACTOR TO ARRANGE FOR THE RELOCATION AND RELOCATION COSTS, IF ANY, OF ALL UTILITIES, AND SUBMIT A UTILITY RELOCATION SCHEDULE TO THE MUNICIPALITY AND DESIGN ENGINEER PRIOR TO CONSTRUCTION. ALL PUBLIC UTILITY EQUIPMENT POLES, BOXES, STRUCTURES AND MUNICIPAL UTILITY COMPANY EQUIPMENT SHALL BE RELOCATED BY THE APPROPRIATE UTILITY COMPANY OR MUNICIPALITY BEFORE ANY WORK IS STARTED.

3 APPROVALS

3.1 THE CONTRACTOR IS TO USE ONLY THAT OFFICIAL CONSTRUCTION SET OF DRAWINGS WHICH CONTAINS THE APPROVAL OF THE GOVERNMENT AGENCY/UTILITY SIGNED ON THE COVER SHEET OF THE PLANS. THE CONTRACTOR SHALL NOT PLACE BIDS OR START CONSTRUCTION ON A SET OF DRAWINGS UNSIGNED BY THE GOVERNMENT AGENCY AND/OR MARKED "NOT FOR CONSTRUCTION".

4 RECORD DRAWINGS

4.1 IT IS THE RESPONSIBILITY OF THE CONTRACTOR TO PROVIDE AND KEEP AN UPDATED RECORD SET OF AS-BUILT INFORMATION DRAWINGS IN GOOD CONDITION ON THE JOB SITE AND PROVIDE THE DESIGN ENGINEER AT COMPLETION OF THE WORK, WITH THE RECORD SET SHOWING FIELD VERIFIED LOCATIONS OF ALL VALVES, BOXES, MANHOLES, UTILITY POLES, PIPE SLEEVES, UTILITY ENCASEMENT AND OTHER UTILITY LINES AND EQUIPMENT ABOVE AND BELOW GROUND WHICH THE CONTRACTOR ENCOUNTERS AND INSTALLS IN HIS AREA OF WORK.

4.2 ACCEPTANCE OF THE COMPLETED PAVING, GRADING OR UTILITY INSTALLATION WILL NOT BE GIVEN UNTIL REPRODUCIBLE AS-BUILT PLANS HAVE BEEN SUBMITTED BY THE ENGINEER AND APPROVED BY THE LOCAL GOVERNING AGENCY.

5 OBSERVATION

5.1 ALL MATERIALS USED AND ALL WORK DONE BY THE CONTRACTOR SHALL BE SUBJECT AT ALL TIMES TO THE INSPECTION, TESTING AND APPROVAL OF THE ENGINEER AND GOVERNING AGENCY. SPECIAL INSPECTION AND TESTING SERVICES SHALL BE PROVIDED AT THE OWNER'S EXPENSE, AS REQUIRED BY THE TOWN ENGINEER.

5.2 THE CONTRACTOR SHALL CONTACT THE APPROPRIATE PUBLIC UTILITY COMPANIES FOR INSPECTION OF TRENCHING, BEDDING AND BACKFILLING DONE IN CONJUNCTION WITH INSTALLATION OF THOSE UTILITIES ON THIS PROJECT.

5.3 SUBMITTAL OF AN ENGINEER'S CERTIFICATE OF COMPLETION IS REQUIRED BY A.D.E.Q. FOR ALL WATER AND SEWER SYSTEM CONSTRUCTION. RELATED INSPECTION AND TESTING SHALL BE PROVIDED BY THE OWNER'S ENGINEER AT THE OWNER'S EXPENSE.

5.4 SOILS COMPACTION TEST RESULTS MUST BE SUBMITTED TO THE ENGINEER'S OFFICE FOR ALL FILL MATERIAL FOR ROADS, TRENCH BACKFILL AND SITE FILL MATERIALS UNDER SLABS AND STRUCTURES. NO FILL MATERIALS SHALL BE PLACED WITHOUT TESTING DURING PLACEMENT. NO EARTH MATERIAL SHALL BE PLACED WITHOUT APPROVAL OF THE PREVIOUS LIFTS. THE CONTRACTOR SHALL SUBMIT ALL TEST RESULTS TO THE DESIGN ENGINEER AND GOVERNMENTAL AGENCIES.

5.5 CONTRACTOR SHALL SUBMIT A SCHEDULE, APPROVED IN WRITING BY A QUALIFIED CONSULTING TESTING AGENCY, FOR FREQUENCY, LOCATION AND TYPE OF ALL PROJECT TESTING. THE CONTRACTOR WILL BE RESPONSIBLE FOR SCHEDULING AND COORDINATION OF ALL TESTING INCLUDING THE FOLLOWING ITEMS WHICH SHALL BE TESTED IN ACCORDANCE WITH MAG SPECIFICATIONS...

1. SUBGRADE COMPACTION
2. BASE COURSE COMPACTION
3. ASPHALT PAVEMENT MIX DESIGN QUALITY
4. CONCRETE STRENGTH
5. TRENCH BEDDING AND BACKFILL
6. TESTING FOR UTILITIES, PIPING AND DRAINAGE SYSTEMS

5.6 THE TOWN SHALL BE NOTIFIED BY THE CONTRACTOR 24 HOURS PRIOR TO BEGINNING DIFFERENT PHASES OF CONSTRUCTION SO THAT CITY INSPECTIONS MAY BE SCHEDULED.

6 FINAL ACCEPTANCE

6.1 FINAL ACCEPTANCE OF THE CONSTRUCTION, BY THE TOWN ENGINEER, IS REQUIRED BEFORE RELEASING OF A PERMIT AND OR TRANSFERRING OWNERSHIP OF THE IMPROVEMENTS TO THE CITY.

6.2 APPROVAL OF A PORTION OF THE WORK IN PROGRESS DOES NOT GUARANTEE ITS FINAL ACCEPTANCE. TESTING AND EVALUATION MAY CONTINUE UNTIL WRITTEN FINAL ACCEPTANCE OF A COMPLETE WORKABLE UNIT. ACCEPTANCE OF COMPLETED IMPROVEMENTS WILL NOT BE GIVEN UNTIL DEFECTIVE OR UNAUTHORIZED WORK IS REMOVED, AND FINAL CLEANUP IS COMPLETE.

7 UTILITIES

7.1 A UTILITY COORDINATION MEETING SHALL BE COORDINATED BY THE CONTRACTOR PRIOR TO THE START OF ANY WORK. ALL UTILITY ISSUES SHALL BE ADDRESSED IN ACCORDANCE WITH MAG SECTION 105.6.

7.2 LOCATION OF UNDERGROUND UTILITIES SHALL BE ACCOMPLISHED IN ACCORDANCE WITH ARS 40-360.22 PRIOR TO ANY EXCAVATION. BLUE STAKE SHALL BE CALLED AT 1-800-STAKE-IT FOR ACCURATE LOCATION OF UTILITIES AS NECESSARY AND PRIOR TO ANY EXCAVATION. UTILITIES IF INDICATED ON PLANS ARE APPROXIMATE LOCATIONS ONLY, TAKEN FROM THE UTILITY COMPANY MAPS. IF THE CONTRACTOR ENCOUNTERS ANY LINES NOT INDICATED ON THE DRAWINGS OR MARKED IN THE FIELD BY THE UTILITY COMPANY THAT MAY INTERFERE WITH HIS WORK, HE SHALL NOTIFY THE APPROPRIATE UTILITY COMPANY IMMEDIATELY FOR DISPOSITION OF THOSE FACILITIES.

7.3 THE CONTRACTOR IS RESPONSIBLE FOR PREPARATION OF GRADE, TRENCHING, BACKFILLING, PAD CONSTRUCTION AND CONCRETE PADS FOR UTILITY EQUIPMENT INSTALLED ON THIS PROJECT. CONTRACTOR SHALL CONTACT LOCAL UTILITY COMPANIES FOR DETAILS AND REQUIREMENTS.

7.4 UTILITIES MUST BE LOCATED TO MINIMIZE INTERFERENCE WITH ONE ANOTHER, TO PROVIDE REQUIRED HORIZONTAL AND VERTICAL SEPARATIONS, AND TO PROVIDE MAINTENANCE ACCESS WITHOUT VIOLATING EASEMENT BOUNDARIES. SEPARATION BETWEEN UTILITIES PER MAG STANDARD

7.5 ALL UTILITY SLEEVES SHALL BE PLACED PRIOR TO SUBBASE CONSTRUCTION AND PAVING. CONTACT APPROPRIATE UTILITY COMPANIES FOR REQUIREMENTS IN ALL AREAS.

7.6 ALL WATER MAINS, APPURTENANCES, AND INSTALLATION SHALL CONFORM TO A.W.W.A. STANDARDS AND ARIZONA DEPARTMENT OF ENVIRONMENTAL QUALITY, AND TOWN OF JEROME REQUIREMENTS. WATER SYSTEM SHALL BE TESTED PER A.D.E.Q. BULLETIN NO. 10 TO THE APPROPRIATE A.W.W.A. STANDARDS.

7.7 ALL FIRE HYDRANTS SHALL MEET ALL REQUIREMENTS OF A.W.W.A. C-509-80 AND TOWN OF JEROME REQUIREMENTS.

8 CONSTRUCTION STAKING

8.1 THE ACCURACY OF ALL CONSTRUCTION WORK SHALL BE MAINTAINED AND VERIFIED BY THE OWNER'S SURVEYOR AT THE OWNER'S EXPENSE BY PROVIDING CONSTRUCTION STAKING SUITABLE TO THE TOWN ENGINEER. STAKES WILL BE SET ESTABLISHING LINES AND GRADES (FINISH OR FLOWLINE) FOR ALL CONSTRUCTION INCLUDING ROADS, CURB AND GUTTER, SIDEWALKS, UTILITIES, STRUCTURES, AND OTHER WORK AS CONSIDERED NECESSARY BY THE ENGINEER. ALL SURVEY CONTROL SHALL BE SET BY THE OWNER'S SURVEYOR FROM MONUMENTS ACCEPTABLE TO THE ENGINEER.

9 GRADING AND EARTHWORK

9.1 PERFORM ALL EARTHWORK GRADING, CUTTING AND FILLING AS PER THE PROJECT SOILS REPORT* AND ALL ADDENDA. ALL WORK TO BE COORDINATED AS PER THE SWPPP.

9.2 NO GRADING OR TRENCHING WORK SHALL BEGIN PRIOR TO SUPPORTING AND PROTECTING EXISTING ONSITE AND ADJACENT PROPERTY FROM SETTLING, CRACKING, OR OTHER DAMAGE WHICH MIGHT RESULT. CONTRACTOR SHALL VERIFY FROM SOILS REPORT RECOMMENDATIONS THE DEGREE OF DIFFICULTY REQUIRED FOR TRENCHING AND EXCAVATION WORK BASED ON DEPTH AND TYPES OF MATERIALS TO BE ENCOUNTERED.

9.3 WATER SOURCE: THE CONTRACTOR SHALL MAKE THE NECESSARY ARRANGEMENTS FOR OBTAINING ALL WATER REQUIRED FOR SOIL COMPACTION, DRINKING PURPOSES AND DUST CONTROL. (MAG SPEC 225)

9.4 CLEARING AND GRUBBING: EXAMINE SITE AND PROVIDE NECESSARY EQUIPMENT AND LABOR TO REMOVE FROM THE SITE AND DISPOSE OF STUMPS, ROOTS, ROCKS, LOOSE FILL, VEGETATION, DEBRIS, AND ANY OTHER OBJECTIONABLE MATERIALS FROM THE BUILDING AND FILL AREAS. CLEAN, UNCLASSIFIED ONSITE SOILS MAY BE USED IN GENERAL AS FILL MATERIAL. SEE MAG SPECIFICATION SECTIONS 201 AND 215.

9.5 TOPSOIL THAT WILL BE AFFECTED BY ROUGH GRADING OR EXCAVATION SHALL BE STOCKPILED ON THE SITE SEPARATELY AND SHALL NOT BE USED FOR FILL, BUT SHALL BE CONSERVED AND USED FOR FINE AND FINISH GRADING.

9.6 SITE DRAINAGE: CONSTRUCTION OF ALL SWALES, CHANNELS, DRAINAGE PIPES, DRAINAGE STRUCTURES AND BANK PROTECTION SHALL BE CONSTRUCTED DURING THE FIRST PHASES OF SITE CONSTRUCTION TO PROTECT ALL OTHER CONSTRUCTION FROM SURFACE WATERS. DIVERT RUN OFF WATER AROUND CONSTRUCTION OPERATIONS. CARE SHALL BE TAKEN BY THE CONTRACTOR NOT TO ADVERSELY AFFECT ADJACENT PROPERTIES. DRAIN EXCAVATIONS BY PUMPING OR OTHER SATISFACTORY METHOD TO PREVENT SOFTENING OF THE FOUNDATION SOILS, UNDERCUTTING OF FOOTINGS, OR OTHER ACTIONS DETRIMENTAL TO PROPER CONSTRUCTION PROCEDURES. ALL WORK TO BE COORDINATED AS PER THE SWPPP.

9.7 THE CONTRACTOR SHALL PROVIDE POSITIVE DRAINAGE AWAY FROM ALL WALLS AND FOUNDATIONS. ALL STORM DRAINS, DRAIN LINES, OVERFLOWS, OUTLETS, AND/OR OTHER DRAINAGE TYPE OUTLETS WHICH CONDUCT MOISTURE NEAR THE STRUCTURES SHALL BE POSITIVELY DRAINED AWAY FORM THE STRUCTURE. NO WATER SHALL BE PERMITTED TO POND NEAR STRUCTURES OR FOUNDATIONS. ALL DRAINAGE SHALL BE CHANNELED AND TAKEN A MINIMUM OF 10 FEET AWAY FROM ALL STRUCTURES.

9.8 SUBGRADE PREPARATION: IF THE NATURAL SUBGRADE IS LESS THAN THE REQUIRED DENSITY, IT SHALL BE SCARIFIED AND COMPACTED TO A MINIMUM DEPTH OF TWELVE INCHES OR AS NOTED IN THE SOILS REPORT IMMEDIATELY PRIOR TO PLACING SUBSEQUENT FILL MATERIAL THEREON. THE CONTRACTOR IS RESPONSIBLE FOR MAINTENANCE AND REPAIR OF DAMAGE TO PREPARED SUBGRADE CAUSED BY CONTRACTORS OPERATIONS OR PUBLIC TRAFFIC UNTIL ACCEPTANCE OF PROJECT. NO MATERIALS SHALL BE PLACED UPON THE PREPARED SUBGRADE UNTIL IT MEETS THE SPECIFIED REQUIREMENTS. ROADWAY SUBGRADE COMPACTION INCLUDES SUBGRADE UNDER ALL PAVEMENT, CURB, SIDEWALKS, SHOULDERS AND FILL SLOPES. SUBGRADE TOLERANCES SHALL BE AS SPECIFIED IN MAG SECTION 301. OPEN LANDSCAPED AREAS SHALL BE GRADED TO +/- 0.20 FEET.

9.9 EARTH FILL: AREAS TO BE FILLED SHALL BE LEVELED TO PROVIDE A LEVEL BASE TO SUPPORT FILL MATERIALS. SUBGRADE AND SUBBASE AREAS REQUIRING FILL MATERIAL SHALL BE SCARIFIED MOISTENED AND COMPACTED PRIOR TO PLACING FILL. ALL FILL, SUBGRADE AND SUBBASE MATERIALS SHALL BE COMPACTED TO SPECIFIED DENSITIES AT OR NEAR OPTIMUM MOISTURE CONTENTS AS VERIFIED AND RECOMMENDED BY THE SOILS ENGINEER. PLACE FILL IN HORIZONTAL LIFTS NOT EXCEEDING EIGHT INCHES IN LOOSE THICKNESS BEFORE COMPACTION. SLOPED SURFACES SHALL BE PLOWED, STEPPED, AND BENCHED SO THAT THE FILL MATERIAL WILL BOND WITH THE EXISTING MATERIAL. BENCH AT THE TOE OF FILL SLOPES AND PERIODIC INTERVALS UP THE FILL SLOPES BENCHES.

9.10 IT IS THE RESPONSIBILITY OF THE CONTRACTOR TO CONTACT THE TESTING COMPANY FOR SCHEDULING OF COMPACTION TESTING. THE FREQUENCY OF DENSITY AND MOISTURE TESTS REQUIRED FOR ADEQUATE CONTROL SHALL BE THE RESPONSIBILITY OF THE SOILS ENGINEER WHO SHALL CERTIFY TO THE ENGINEER AND CONTRACTOR AT PROJECT END THAT THE ROADBED FILL IS COMPACTED AS OUTLINED HEREIN. COMPACTION SHALL BE ACHIEVED BY MECHANICAL MEANS. IN NO CASE SHALL STRUCTURE BACKFILLING BE FLOOD WATER SETTLED.

9.11 ALL SLOPE CONSTRUCTION AND ROADWAY EXCAVATION SHALL CONFORM TO THE REQUIREMENTS OF MAG SPECIFICATIONS SECTIONS 201, 205, 211, 301, AND UBC SECTIONS 7009 AND 8010. CUT AND FILL SLOPES SHALL BE AS INDICATED ON THE DETAILS AND PLANS. CUT AND FILL SLOPE GRADIENTS SHALL NOT EXCEED 2:1 IN STEEPNESS WITHOUT WRITTEN AUTHORIZATION FROM THE SOILS ENGINEER AND EXAMINATION BY THE DESIGN ENGINEER. ALL SLOPE CONDITIONS SHALL BE PROVIDED WITH THE APPROPRIATE BENCHES AS SPECIFIED IN THE REFERENCE DOCUMENTS AND INDICATED ON THE PLANS. IF SOILS CONDITIONS ARE ENCOUNTERED WHICH DO NOT ALLOW THE ESTABLISHMENT OF THE INDICATED CUT OR FILL SLOPES, THE DESIGN ENGINEER AND SOILS ENGINEER SHALL BE CONTACTED IMMEDIATELY TO DETERMINE AN ADJUSTMENT TO THE SLOPE GRADIENT OR TO ESTABLISH A METHOD OF STABILIZATION ALL FILL SLOPES SHALL BE COMPACTED AS EACH LIFT OF FILL MATERIAL IS PLACED. ALL CUT AND FILL SLOPES SHALL BE UNIFORMLY GRADED TO LINES AND GRADES INDICATED. TOPS OF ALL CUT SLOPES SHALL BE ROUNDED AND ALL UNSTABLE AND LOOSE MATERIAL AT TOP OF SLOPE SHALL BE REMOVED. TOP OF CUT SLOPES OVER 10' HIGH SHALL BE PROVIDED WITH BROW DITCHES FOR DRAINAGE. ALL CUT AND FILL SLOPES SHALL BE REVEGETATED WITH A MIXTURE OF NATIVE GRASSES AND WILD FLOWER SEED OR AS SPECIFIED WITHIN THE LANDSCAPE PLANS. COMPACT ALL SHOULDERS AND BACKFILLS BEHIND ALL STRUCTURE AND WALLS.

9.12 COMPACT TO THE FOLLOWING SPECIFIED PERCENT OF MAXIMUM DENSITY AS DETERMINED IN ACCORDANCE WITH ASTM D698 AND MAG SECTION 211 OR AS DIRECTED IN THE SOILS REPORT.

MINIMUM PERCENT COMPACTION
SUBGRADE SOIL:
ROADWAY AND STRUCTURE AREAS----------95
PAVED AREAS (PAVEMENTS, SIDEWALKS, & PADS)---------95
EARTH FILL:
ROADWAY AND STRUCTURE AREAS----------95
PAVED AREAS (PAVEMENTS, SIDEWALKS, & PADS)---------95
GRASSED AND PLANTING AREAS----------85
AGGREGATE BASE COURSE----------100
BACKFILL AROUND STRUCTURES----------95
BACKFILL FOR UTILITY TRENCHES (PER MAG SECTION 601). PROVIDE TYPE 1 BACKFILL OR AS DIRECTED BY APPROPRIATE UTILITY REQUIREMENTS. BACKFILL FOR TRENCHES WITHIN 10' OF STRUCTURES AND WALLS SHALL BE COMPACTED TO 95% UNLESS DIRECTED OTHERWISE BY ENGINEER.

9.13 EXCAVATION: EXCAVATE TO THE DIMENSIONS AND DEPTHS INDICATED ON THE DRAWINGS. FOUNDATIONS SHALL REST ON ENGINEERED COMPACTED FILL OR UNDISTURBED NATURAL SOILS AT GRADE ELEVATIONS INDICATED. IF SUITABLE SOIL IS NOT REACHED AT THE DEPTHS INDICATED, THE CONTRACTOR SHALL IMMEDIATELY NOTIFY THE SOILS ENGINEER AND ENGINEER. THE CONTRACTOR WILL BE DIRECTED, IN WRITING, TO EXCAVATE TO THE DEPTH OF SUITABLE SOIL. EXCAVATION FOR FOUNDATIONS WHICH ARE CARRIED BELOW THE DEPTHS INDICATED SHALL HAVE THE CONCRETE EXTENDED TO THE BOTTOM OF THE EXCAVATION AT THE CONTRACTOR'S EXPENSE. SEE MAG SPECIFICATION SECTION 206.

9.14 WATERING: CAREFULLY WATER EARTH FILL DURING PLACING BY MEANS OF A FINE SPRAY OR OTHER APPROVED METHOD, SO THAT EACH LAYER IS THOROUGHLY AND UNIFORMLY WETTED. MOISTURE CONTENT OF THE MATERIAL SHALL BE CAREFULLY CONTROLLED AT ALL TIMES AND CHECKED AT PROPER INTERVALS TO INSURE CORRECT MOISTURE FOR COMPACTION SPECIFIED. SEE MAG SECTION 225 AND SOILS REPORT.

10 PAVING

10.1 COMPLETE ASPHALTIC CONCRETE PAVEMENT INSTALLATION SHALL INCLUDE BUT NOT BE LIMITED TO THE FOLLOWING:
A. TACK COATING OF ALL SURFACES, UNDILUTED .02 TO .10 GAL/SY, DILUTED 1:1 MIXTURE, .05 TO .15 GAL/SY, OR AS DIRECTED.
B. SEAL COATING: SEAL COATING WITHIN THE RIGHT-OF-WAY SHALL BE A FOG SEAL COAT.
C. PAINT FOR PAVEMENT STRIPING AND MARKING SHALL CONFORM TO FEDERAL SPEC. NO. TTP-155E, "PAINT, TRAFFIC, HIGHWAY, WHITE AND YELLOW". COLORS FOR PAVEMENT MARKING AND STRIPING SHALL BE AS SPECIFIED BY THE TOWN ENGINEER.
D. TRAFFIC CONTROL DEVICES: SIGNS AND PAVEMENT

11 FIELD INSPECTION

11.1 THE CONTRACTOR SHALL CAREFULLY PRESERVE ALL STAKES, REFERENCE AND CONTROL POINTS, ETC. AGAINST DESTRUCTION AND SHALL PROMPTLY NOTIFY THE ENGINEER OF ANY STAKES WHICH HAVE BEEN DISTURBED.

11.2 OWNER'S REGISTERED SURVEYOR SHALL BE NOTIFIED TWO WORKING DAYS (48 HOURS) MINIMUM PRIOR TO FIELD STAKING SCHEDULING.

11.3 ANY QUESTIONS RAISED RELATIVE TO ACCURACY OF IMPROVEMENT INSTALLATION SHALL NOT BE RAISED SUBSEQUENT TO COMPLETION OF THE WORK UNLESS ALL SURVEY STAKES ARE MAINTAINED INTACT. SHOULD SUCH STAKES NOT BE PRESENT AND VERIFIED AS TO THEIR ORIGIN, NO CLAIM FOR ADDITIONAL COMPENSATION FOR CORRECTION SHALL BE PRESENTED TO ANY PARTY AND SUCH WORK SHALL BE CORRECTED BY THE CONTRACTOR AT HIS EXPENSE.

12 SUSPENSION OF WORK

12.1 THE ENGINEER OR HIS AUTHORIZED REPRESENTATIVE MAY SUSPEND THE WORK BY WRITTEN NOTICE WHEN, IN HIS JUDGMENT, PROGRESS IS UNSATISFACTORY, WORK BEING DONE IS UNAUTHORIZED OR DEFECTIVE, WEATHER CONDITIONS ARE UNSUITABLE, OR THERE IS DANGER TO THE PUBLIC HEALTH OR SAFETY.

13 WARRANTY

13.1 ANY DEFECTS WHICH APPEAR IN THE WORK WITHIN TWO YEARS FROM THE DATE OF ACCEPTANCE AND WHICH ARE DUE TO IMPROPER WORKMANSHIP OR INFERIOR MATERIALS SUPPLIED SHALL BE CORRECTED BY OR AT THE EXPENSE OF THE CONTRACTOR.

14 EROSION CONTROL NOTES

(SPECIFICATIONS FOR PERMANENT SEEDING)

14.1 SITE PREPARATION
- A. INSTALL NECESSARY SURFACE WATER CONTROL MEASURES PRIOR TO PLANTING PERMANENT SEEDING.
- B. GRADE TO PERMIT USE OF CONVENTIONAL EQUIPMENT FOR SEEDBED PREPARATION.
- C. PROVIDE ADEQUATE DRAINAGE WHERE INTERNAL WATER MOVEMENT, ESPECIALLY AT TOES OF SLOPES, MAY CAUSE SEEPS OR SLIPPAGE BEFORE SEEDING IS WELL ESTABLISHED.

14.2 SEEDBED PREPARATION A. AS PRACTICAL, PERFORM ALL CULTURAL OPERATIONS AT RIGHT ANGLES TO THE SLOPE. B. IMMEDIATELY BEFORE SEEDING, RAKE OR OTHERWISE LOOSEN PLANTING SURFACE TO PROVIDE A SMOOTH, FRIABLE SURFACE FREE OF EARTH CLODS, HUMPS AND DEPRESSIONS, AND DISPOSE OF LOOSE STONES HAVING A DIMENSION GREATER THAN ONE INCH AND DEBRIS BROUGHT TO THE SURFACE DURING CULTIVATION.

14.3 PLANTING A. APPLY SEED MIX AT THE RATE OF 11 POUNDS PER ACRE. SHALL CONTAIN THE FOLLOWING PROPORTION OF PURE LIVE SEED: SAND DROPSEED (SPOROBOLUS CRYPTANDRUS) 1 LB SIDEOATS GRAMA (BOUTELOUS CURTIPENDULA)5 LB CRESTED WHEATGRASS (AGROPYRON CRISTATUM) 5 LB B. APPLY SEED IN TWO DIRECTIONS AT RIGHT ANGLES TO EACH OTHER WITH HALF THE SPECIFIED APPLICATION RATE APPLIED IN EACH DIRECTION. C. IMMEDIATELY AFTER SEEDING, UNIFORMLY SPREAD SCREENED MANURE AT THE RATE OF ONE CUBIC YARD PER 1000 SQUARE FEET AND WATER UNTIL THE GROUND IS WET TO A MINIMUM DEPTH OF TWO INCHES. D. HYDRAULIC SEEDING USING 1500 POUNDS OF WOOD CELLULOSE FIBER PER ACRE MAY BE UTILIZED IN LIEU OF PLANTING.

14.4 MAINTENANCE A. PROTECT PLANTED AREAS FROM GRAZING, FIRE, TRAFFIC, AND WEED GROWTH. B. MAINTAIN PLANTED AREAS UNTIL A GOOD STAND OF GRASS IS ESTABLISHED. AREAS AS REQUIRED IF NO GROWTH IS PRESENT WITHIN 15 DAYS OF PLANTING.

15 TEMPORARY EROSION CONTROL

15.1 EROSION CONTROL BERMS AND ROCK CHECK DAMS
- A. PROVIDE EARTHEN BERMS AT TOES OF SLOPES REMAINING BARE BETWEEN CONSTRUCTION PHASES.
- B. PLACE TEMPORARY ROCK CHECK DAMS IN ROAD DITCHES AND CHANNELS IF RIP-RAP PROTECTION WILL NOT BE PROVIDED WITHIN 60 DAYS.

15.2 CONTRACTOR SHALL BE RESPONSIBLE FOR PROVIDING EROSION CONTROL MEASURES SUCH AS SAND BAGGING, TEMPORARY DE-SILTING BASIN CONSTRUCTION BERMS, VISQUEEN, ETC. TO PROTECT ADJOINING PROPERTIES FROM EROSION.

16 GENERAL CONSTRUCTION NOTES

16.1 ALL CORRUGATED METAL PIPE TO BE 14 GAUGE, UNLESS OTHERWISE APPROVED BY THE DESIGN ENGINEER.

16.2 ALL CORRIGATED METAL PIPE SHALL HAVE FLARED END SECTIONS, EXCEPT WHERE HEADWALLS ARE USED.

16.3 ALL DRAINAGE CULVERTS AND PIPES SHALL HAVE A MINIMUM COVER OF 24" OR AS SPECIFIED.

16.4 ADDITIONAL CARE SHALL BE TAKEN TO PROTECT ALL CMP DURING CONSTRUCTION.

16.5 RETAINING WALLS SHALL BEAR ONTO NATURAL BEDROCK, OR COMPACTED SOIL WHICH HAS A BEARING VALUE OF 3,000 P.S.F. VERIFICATION OF SAID BEARING VALUE TO BE PROVIDED BY THE SOILS ENGINEER.

16.6 RIPRAP MATERIAL SHALL BE AS SPECIFIED TO A DEPTH OF TWICE THE SIZE OF Dso UNDER LAYING A FILLER LAYER OF Dso =3/4" TO A DEPTH OF 10" OR GEOTEXTILES. THE GRADATION OF RIPRAP SHOULD FOLLOW A SMOOTH CURVE. THE RATIO TO THE LARGEST SIZE ROCK TO Dso SHOULD BE EQUAL TO OR LESS THAN 2 (Dso/Dso ~0.5). THE RIPRAP SHOULD BE HARD, DENSE, DURABLE AND RESISTANT TO WEATHER AND FRACTURE. ALL RIPRAP TO BE HAND PLACED IN AN INTERLOCKING POSITION. FILLER MATERIAL TO BE WELL GRADED GRAVEL AS SPECIFIED. MATERIAL FURNISHED FOR RIPRAP SHALL CONFORM TO MAG SPEC 220.2.

16.7 ALL CONCRETE AND REBAR PLACEMENT PER MAG SPEC 505.

16.8 CONCRETE TESTING PER MAG SPEC 725.

16.9 ALL CONCRETE TO BE CLASS B (2500PSI) IF NOT SPECIFIED.

16.10 MINIMUM COVER ON ALL REBAR TO BE MIN 1" UNLESS OTHERWISE SPECIFIED.

16.11 MINIMUM LAP AT REBAR SPLICES TO BE 1' UNLESS OTHERWISE SPECIFIED.

16.12 ALL MANHOLE FRAMES TO HAVE 12" ANCHORS SPACED A MINIMUM OF 12" RADIALLY AROUND FRAME.

16.13 CONCRETE FOR FOOTINGS AND PADS AHALL BE CLASS A (3000 PSI)

SURVEY

1. TOPOGRAPHIC SURVEY BY KENNEY AERIAL MAPPING, INC., PHOENIX, AZ, DATED NOVEMBER 2022 AND SUPPLEMENTED IN FEBRUARY 2023. ADDITIONAL TOPOGRAPHIC SURVEY DATA PERFORMED BY SEC, INC. COORDINATES ARE RELATIVE TO NAD 83, AZ STATE PLANE CENTRAL ZONE, INTERNATIONAL FEET. ELEVATIONS RELATIVE TO NAVD 83. SURVEY CONTROL ON SHEET C2.0.

TREE NOTES

1. ALL EXISTING TREES AND SHRUBS NOT AFFECTED BY BUILDING CONSTRUCTION OR ROAD DEVELOPMENT MUST BE FENCED WITH A CONSTRUCTION ENVELOPE FENCE TO PROTECT THEM DURING CONSTRUCTION

2. NO TREES TO BE PLACED OVER/ON SEWER LINE

ADEQ WATER AND SEWER SYSTEM NOTES

MANHOLES

ALL MANHOLES SHALL BE 4-FT. ID PRECAST CONCRETE WITH POURED-IN-PLACE CONCRETE BASE AND TRAFFIC BEARING RING AND COVER. ALL COVERS SHALL BE 2-FT. IN DIAMETER AND SHALL BE MARKED "SEWER". TEST MANHOLES FOR WATER TIGHTNESS (INFILTRATION) PER R 18-9-E301.4.01.D.3.F. WATER TIGHTNESS SHALL BE TESTED BY EITHER 1) FILLING THE MANHOLE WITH WATER AND ENSURING THAT THE DROP IN WATER LEVEL DOES NOT EXCEED 0.0034 OF THE TOTAL MANHOLE VOLUME PER HOUR, OR 2) AIR PRESSURE TESTING USING THE "STANDARD TEST METHOD FOR CONCRETE SEWER MANHOLES BY NEGATIVE AIR PRESSURE (VACUUM) TEST", ASTM C1244-02a1 (2002). TEST 100% OF ALL MANHOLES. MANHOLES SHALL CONFORM TO A.D.E.Q. AND M.A.G. SPECIFICATIONS. CONSTRUCTION SHALL CONFORM TO M.A.G. STD. DTLS. 420-1 AND 420-2.'

CONCRETE

CLASS A CONCRETE SHALL HAVE A MINIMUM 28 DAY COMPRESSIVE STRENGTH OF 2000 PSI.

PIPE

GRAVITY SEWER PIPE SHALL BE PVC, SDR-26 AND CONFORM TO ASTM D-1784 AND ASTM D-3034. SEALS SHALL CONFORM TO ASTM F-477. PIPE SHALL BE JOINED BY BELL AND SPIGOT TYPE JOINTS. FITTINGS SHALL CONFORM TO ASTM D-3212. GRAVITY SEWER PIPE SHALL BE TESTED FOR DEFLECTION AND LEAKAGE. SHORT TERM DEFLECTION TESTING SHALL BE PERFORMED AFTER COMPLETE BACKFILL BUT PRIOR TO INSTALLATION OF FINISH SURFACE MATERIAL. A SHORT TERM DEFLECTION IN EXCESS OF 5% SHALL BE CONSIDERED UNACCEPTABLE AND PIPE SHALL BE REPAIRED, OR REPLACED AND RETESTED. A MINIMUM OF 100% OF GRAVITY SEWER SHALL BE DEFLECTION TESTED. SEWER PIPE SHALL BE TESTED FOR LEAKAGE USING LOW PRESSURE AIR TESTING PER "STANDARD TEST METHOD FOR INSTALLATION ACCEPTANCE OF PLASTIC GRAVITY SEWER LINES USING LOW PRESSURE AIR", ASTM F 1417-92, REAPPROVED 1998. TEST 100% OF ALL SEWER LINES. TEST THE TOTAL LENGTH OF THE SEWER LINE FOR UNIFORM SLOPE BY LAMP LIGHTING, REMOTE CAMERA OR SIMILAR METHOD APPROVED BY ADEQ AND RECORD THE RESULTS.

DUCTILE IRON PIPE SHALL BE AWWA C-150, CLASS 350 AND SHALL BE TESTED FOR LEAKAGE PER AWWA STANDARD C-600.

A MINIMUM HORIZONTAL DISTANCE OF 6-FT SHALL BE MAINTAINED BETWEEN MAINS AND GRAVITY SEWERS.

MATERIAL

ALL MATERIALS & PRODUCTS THAT COME INTO CONTACT WITH DRINKING WATER OR DRINKING WATER TREATMENT CHEMICALS MUST COMPLY WITH AWWA STANDARDS & NSF STANDARD 61. ANY "OR EQUAL' SUBSTITUTION SHALL ALSO MEET NSF STANDARD 61.

ALL MATERIALS USED IN THE INSTALLATION OF WATER MAINS SHALL BE PURSUANT TO AAC R-18-4-119, & SHALL BE NSF APPROVED FOR POTABLE WATER.

DISINFECTION

WATER MAINS. SHALL BE DISINFECTED IN ACCORDANCE WITH ADEQ ENGINEERING BULLETIN NO.8 "DISINFECTION OF WATER SYSTEMS".

TESTING

ONE HUNDRED PERCENT (100%) OF PIPE LINES SHALL BE PRESSURE AND LEAK TESTED IN ACCORDANCE WITH AWWA C-600, SECTION 4 AND MAG SECTION 611. MINIMUM TEST PRESSURES SHALL BE 200 PSI PLUS ALLOWANCE FOR WATER HAMMER.

AFTER PRESSURE AND LEAK TESTING IS SHOWN TO BE SATISFACTORY, WATER LINES SHALL BE DISINFECTED BY CHLORINATION IN ACCORDANCE WITH AWWA C-601, MAG SECTION 610.15, AND ADEQ BULLETIN 8. ALL VALVES SHALL BE WORKED INTERMITTENTLY FOR A PERIOD OF 24 HOURS FOLLOWING CHLORINATION.

WATER SYSTEM THRUST BLOCKING AND/OR JOINT RESTRAINT

PIPE LINES SHALL BE PROVIDED WITH CONCRETE THRUST BLOCKS AT ALL CHANGES IN DIRECTION AND SIZE AND AT ALL TEES, VALVES, PLUGS, AND DEAD ENDS, PER MAG STANDARD DETAILS 301 AND 380 AND YAG STANDARD DETAIL 3-03. PIPE LINES MAY ALSO BE PROVIDED WITH RESTRAINED JOINTS AT ALL CHANGES IN DIRECTION AND SIZE AND AT ALL TEES, VALVES, PLUGS, AND DEAD ENDS, PER MAG STANDARD DETAILS 302 AND 303.

ADEQ WATER & SEWER NOTES (CONT.)

TRENCHING AND BACKFILLING

ROUGH GRADING SHALL BE COMPLETED PRIOR TO INSTALLATION OF UNDERGROUND UTILITIES.

TRENCH BOTTOM SHALL BE COMPACTED BY SUITABLE MEANS APPROVED BY THE ENGINEER PRIOR TO PLACEMENT OF BEDDING MATERIAL. BEDDING MATERIAL SHALL BE PLACED TO PROVIDE UNIFORM AND ADEQUATE LONGITUDINAL SUPPORT UNDER THE PIPE. THE CONTRACTOR SHALL ENSURE THAT A MINIMUM COMPACTED DEPTH OF 6" IS MAINTAINED UNDERNEATH THE PIPE. BELL HOLES SHOULD BE PROVIDED AT EACH JOINT TO PERMIT PROPER ASSEMBLY WHILE MAINTAINING UNIFORM SUPPORT.

BEDDING MATERIAL SHALL BE ROUNDED GRAVEL WITH A MAXIMUM PARTICLE SIZE OF 1 1/2" AND SHALL BE NON-PLASTIC. WHERE DEPTH OF COVER IS 2-FT. OR LESS, BACKFILL MATERIAL SHALL BE ROUNDED GRAVEL WITH A MAXIMUM PARTICLE SIZE OF 4" AND WITH NO MORE THAN 20% PASSING THE #200 SIEVE.

BACKFILL SHALL BE PLACED IN LAYERS OF NOT MORE THAN 8" LOOSE DEPTH AND COMPACTED TO ACHIEVE COMPACTION OF 95% OF THE MAXIMUM DENSITY AS DETERMINED BY AASHTO T-99 AND T-191 OR ASTM D-2922 AND D-3017. THE CONTRACTOR SHALL CONTRACT WITH AN INDEPENDENT TESTING LABORATORY TO PROVIDED COMPACTION TESTING. TESTS SHALL BE PROVIDED AT MINIMUM INTERVALS OF ONE TEST PER 50 CUBIC YARDS OF TRENCH BACKFILL. TEST RESULTS SHALL BE SUBMITTED DAILY TO THE ENGINEER.

TRENCHING, PIPELAYING, BACKFILLING, AND ALL OTHER CONSTRUCTION SHALL BE PERFORMED UNDER THE INSPECTION, COORDINATION, AND SUPERVISION OF A REGISTERED PROFESSIONAL CIVIL ENGINEER.

NO TRENCH SHALL BE FILLED WITH BEDDING MATERIAL OR BACKFILL UNTIL THE EXCAVATION AND PIPE LAYING, RESPECTIVELY, HAVE BEEN APPROVED BY THE OWNER OR HIS AUTHORIZED REPRESENTATIVE.

THE EXCAVATION METHOD EMPLOYED SHALL BE THE CONTRACTOR'S OPTION. MATERIAL SHALL NOT BE STOCKPILED TO A DEPTH OF MORE THAN 5 FEET ABOVE FINISHED GRADE WITHIN 25 FEET OF ANY EXCAVATION OR STRUCTURE. EXCAVATION SHALL EXTEND SUFFICIENT DISTANCE FROM WALLS AND FOOTINGS TO ALLOW PLACING AND REMOVAL OF FORMS, INSTALLATION OF SERVICES AND INSPECTION BY THE ENGINEER. WITHIN 12" OF FINISHED GRADE SHOWN ON THE DRAWINGS, AND FOR THE MANHOLES, FILL AND BACKFILL SHALL BE NATIVE MATERIAL, FEE FROM BROKEN CONCRETE, ORGANIC MATERIAL, OR OTHER DEBRIS WITH SUFFICIENT FINES TO FILL ALL VOIDS AND TO INSURE A UNIFORMLY COMPACTED MASS OF THE REQUIRED DENSITY AND HAVING A MAXIMUM SIZE OF 2 - ½ INCHES WITH 0 TO 20% MINUS #200. ALL FILL AND BACKFILL SHALL BE PLACED IN LAYERS OF NOT MORE THAN 8" LOOSE AND COMPACTED TO 95% OF MAXIMUM DENSITY, DETERMINED BY AASHTO TEST METHOD T-99, PRIOR TO PLACEMENT OF THE NEXT LAYER.

WATER AND SEWER SYSTEM DESIGN: MINIMUM DESIGN CRITERIA

WATER AND SEWER MAINS SHALL BE SEPARATED IN ORDER TO PROTECT PUBLIC WATER SYSTEMS FROM POSSIBLE CONTAMINATION. ALL DISTANCES ARE MEASURED PERPENDICULARLY FROM THE OUTSIDE OF THE SEWER MAIN TO THE OUTSIDE OF THE WATER MAIN. SEPARATION REQUIREMENTS ARE AS FOLLOWS:
1. A WATER MAIN SHALL NOT BE PLACED:
A. WITHIN SIX FEET, HORIZONTAL DISTANCE, AND BELOW TWO FEET, VERTICAL DISTANCE, ABOVE THE TOP OF A SEWER MAIN UNLESS EXTRA PROTECTION IS PROVIDED. EXTRA PROTECTION SHALL CONSIST OF CONSTRUCTING THE SEWER MAIN WITH MECHANICAL JOINT DUCTILE IRON PIPE OR WITH SLIP-JOINT DUCTILE IRON PIPE IF JOINT RESTRAINT IS PROVIDED. ALTERNATE EXTRA PROTECTION SHALL CONSIST OF ENCASING BOTH THE WATER AND SEWER MAINS IN AT LEAST SIX INCHES OF CONCRETE FOR AT LEAST TEN FEET BEYOND THE AREA COVERED BY THIS SUBPARAGRAPH.
B. WITHIN TWO FEET HORIZONTALLY AND TWO FEET BELOW THE SEWER MAIN.
2. NO WATER PIPE SHALL PASS THROUGH OR COME INTO CONTACT WITH ANY PART OF A SEWER MANHOLE. THE MINIMUM HORIZONTAL SEPARATION BETWEEN WATER MAINS AND MANHOLES SHALL BE SIX FEET, MEASURED FROM THE CENTER OF THE MANHOLE.
3. THE MINIMUM SEPARATION BETWEEN FORCE MAINS OR PRESSURE SEWERS AND WATER MAINS SHALL BE TWO FEET VERTICALLY AND SIX FEET HORIZONTALLY UNDER ALL CONDITIONS. WHERE A SEWER FORCE MAIN CROSSES ABOVE OR LESS THAN SIX FEET BELOW A WATER LINE, THE SEWER MAIN SHALL BE ENCASED IN AT LEAST SIX INCHES OF CONCRETE OR CONSTRUCTED USING MECHANICAL JOINT DUCTILE IRON PIPE FOR TEN FEET ON EITHER SIDE OF THE WATER MAIN.

TOPO FEATURES

- EXISTING SANITARY SEWER w/SIZE (12"SA)
- GUARDRAIL
- WASH
- RETAINING WALL
- DIRT ROAD
- PROPERTY LINE (P/L)
- OVERHEAD POWER LINE w/POLE (OHP)
- FENCE LINE (X)
- UNKNOWN EXPOSED PIPE
- CULVERT
- MANHOLE
- AERIAL SURVEY PANEL PT
- SIGN
- POST
- GATE
- TREE OR BUSH

LEGEND
PROPOSED DEVELOPMENT

- CENTER LINE/BASE LINE
- RIP RAP
- FENCE (X)
- GUARD RAIL
- SAFETY RAIL
- CULVERT
- DRAINAGE FLOWLINE
- RETAINING WALL
- SIGNS
- DRAINAGE FLOW DIRECTION

LEGEND
PROPOSED SANITARY SEWER

- PRESSURE SEWER MAIN (FM)
- GRAVITY SEWER MAIN (SA)
- SEWER MANHOLE
- SEWER CLEANOUT

LEGEND
PROPOSED WATER

- WATER MAIN (W)
- WATER METER
- AIR RELEASE VALVE
- BLOW OFF VALVE
- GATE VALVE
- FIRE HYDRANT w/VALVE
- BACKFLOW PREVENTOR VALVE
- WELL
- IRRIGATION CONTROL VALVE
- PIPE END CAP

LEGEND
PROPOSED ELECTRIC/GAS/TV/TEL

- OVERHEAD POWER (OHP)
- UNDERGROUND POWER (E)
- GAS (G)
- TELEPHONE (T)
- COMMON UTILITIES (TV,TEL) (UTIL — UTIL)
- TELEVISION (TV)
- UTILITY POLE
- TELEPHONE RISER (T)
- CABLE T.V. RISER (C)
- GAS METER (G)
- ELECTRIC METER (E)
- ELECTRIC TRANSFORMER
- GUY WIRE

ABBREVIATIONS

LF	LINEAR FEET
ADOT	ARIZONA DEPT. OF TRANSPORATION
ADEQ	ARIZONA DEPT. OF ENVIRONMENTAL QUALITY
MAG	MARICOPA ASSOCIATION OF GOVERNMENTS
MSD	MARICOPA ASSOCIATION OF GOVERNMENTS STANDARD DETAIL
MUTCD	MANUAL OF UNIFORM TRAFFIC CONTROL DEVICES
FF	FINISHED FLOOR ELEVATION
EG	EXISTING GRADE
FG	FINISHED GRADE
TW	FINISHED GRADE AT TOP BACK OF WALL
BW	FINISHED GRADE AT BOTTOM FACE OF WALL
INV	INVERT
FL	FLOW LINE
AB	AGGREGATE BASE COURSE
DG	DECOMPOSED GRANITE
ADA	AMERICANS WITH DISABILITIES ACT
ARV	AIR RELEASE VALVE
BOV	BLOW-OFF VALVE
PVI	POINT OF VERTICAL INTERSECTION
DIP	DUCTILE IRON PIPE
PVC	POLYVINYL CHLORIDE
FPVC	FUSIBLE POLYVINYL CHLORIDE
CMP	CORRUGATED METAL PIPE
HDPE	HIGH DENSITY POLYETHYLENE
EP OR EOP	EDGE OF PAVEMENT
SEC	SOUTHWESTERN ENVIRONMENTAL CONSULTANTS, INC
STA	STATION
TBD	TO BE DETERMINED
VC	VERTICAL CURVE
WWTP	WASTE WATER TREATMENT PLANT
NTS	NOT TO SCALE
SF	SQUARE FEET
EL OR ELEV	ELEVATION
GRD BRK	GRADE BREAK
CP	SURVEY CONTROL POINT
SW	SIDEWALK
CY	CUBIC YARDS

Item I.

NO	BY	DATE	REVISIONS	DATE	APP

Professional Engineer — CERTIFICATE NO. 49106 — KRISHAN GEVINDA GINIGE — 10/31/25 — REGISTERED — ARIZONA, U.S.A.

PREPARED BY:
DESIGNED BY:
DRAWN BY: MMW
CHECKED BY: KG
SCALE: AS SHOWN
DATE 10/31/25
JOB NO. 19-1101CE

TITLE: NOTES 2, LEGENDS, ABBREVIATIONS

JOB: JEROME WWTP — GRADING & UTILITIES PLANS — YAVAPAI COUNTY AZ

PREPARED BY:
SEC Inc.
SOUTHWESTERN ENVIRONMENTAL CONSULTANTS, INC
825 COVE PARKWAY
COTTONWOOD, AZ 86326
928-282-7787

SHEET
C1.1
8 OF 99 SHEETS

JOB NO. 19-1101CE

SEC, Inc., All Rights Reserved. This document is protected under the United States Copyright Act. No part may be reproduced in any form or by any means or stored in a database or retrieval system, without the prior written permission of SEC, Inc. These plans/documents have been prepared using technical knowledge that would be applied by other qualified consultants who practice this same profession in the same area and at the same time. Efforts have been made to be as accurate as possible. However, plans/documents could contain unintentional technical inaccuracies, typographical errors or omissions. Users of these plans/documents should understand that it is highly probable that errors and omissions will occur in any plan/document preparation process.

S:\LAND PROJECTS 2004 ENGINEERING\19-1101CE JEROME WWTP\DWG\C3D\PLANS\NOTES_LEGENDS_DETAILS.DWG

1577

S:\land projects 2004 Engineering\19-1101CE Jerome WWTP\DWG\C3D\Plans\XBGRAD-19-1101CE.dwgS:\LAND PROJECTS 2004 ENGINEERING\19-1101CE JEROME WWTP\DWG\C3D\PLANS\XBGRAD-19-1101CE.DWG

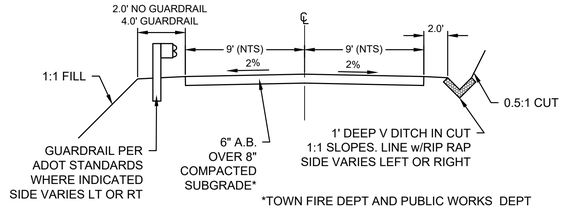

*TOWN FIRE DEPT AND PUBLIC WORKS DEPT HAVE APPROVED USING AB ROAD SURFACE

1 TYPICAL WWTP ACCESS ROAD
1"=6'

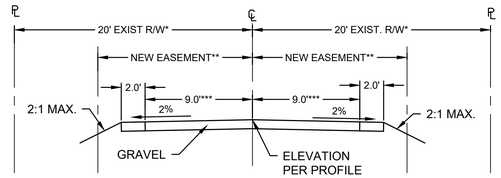

*NORTH DRIVE HAS 40' EXISTING RIGHT OF WAY
**NEW EASEMENT REQ'D. AT PRIVATE PROPERTY. WIDTH VARIES PER PLAN
***LANE WIDTH VARIES PER PLAN

2 TYPICAL NORTH DRIVE AND CEMETERY ACCESS RD
1"=6'

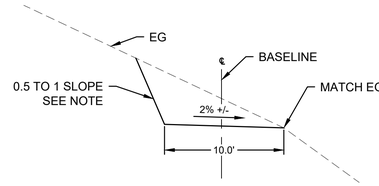

NOTE: 0.5 TO 1 SLOPE UPON APPROVAL BY GEOTECHNICAL ENGINEER

3 TYPICAL SEWER ACCESS ROAD SECTION
1"=6'

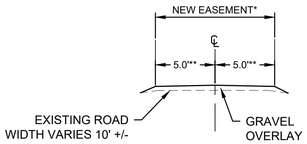

*NEW EASEMENT REQ'D. AT PRIVATE PROPERTY.
**PROVIDE MIN. 10' WIDE GRAVEL OVERLAY

4 TYPICAL CEMETERY RD THROUGH HISTORIC SITE
1"=6'

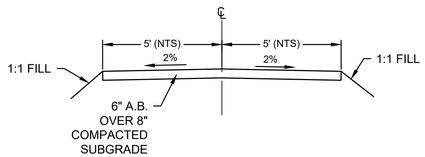

5 TYPICAL LOWER SITE ACCESS ROAD
1"=6'

NO	BY	DATE	REVISIONS	DATE	APP

Item I.

Registered Professional Engineer
CERTIFICATE NO.
49109
KRISHAN GEVINDA GINIGE
10/31/25
DATE SIGNED
ARIZONA, U.S.A.

PREPARED BY:
DESIGNED BY:
DRAWN BY: NMW
CHECKED BY: KG
DATE 10/31/25
SCALE: AS SHOWN
JOB NO. 19-1101CE

TITLE
TYPICAL SECTIONS

JOB
JEROME WWTP
GRADING & UTILITIES PLANS
YAVAPAI COUNTY AZ

PREPARED BY:
SEC Inc.
SOUTHWESTERN ENVIRONMENTAL CONSULTANTS, INC
825 COVE PARKWAY
COTTONWOOD, AZ 86326
928-282-7787

SHEET
C1.2
9 OF 99 SHEETS

JOB NO. 19-1101CE
1578

© SEC, Inc., All Rights Reserved. This document is protected under the United States Copyright Act. No part may be reproduced in any form or by any means or stored in a database or retrieval system, without the prior written permission of SEC, Inc. However, plans/documents could contain unintentional technical inaccuracies, typographical errors or omissions. Users of these plans/documents should understand that it is highly probable that errors and omissions will occur in any plan/document preparation process.

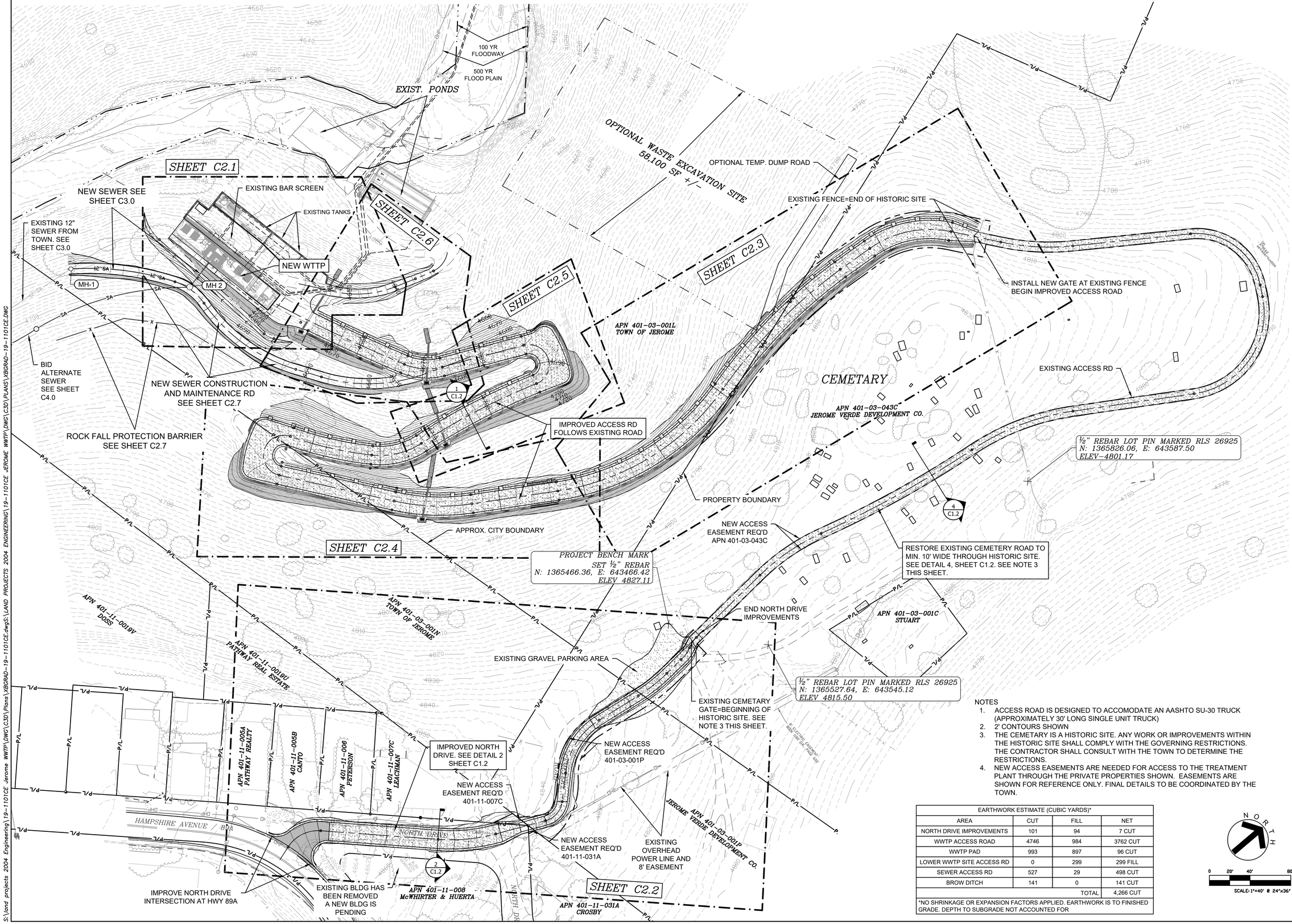

NOTES

1. ACCESS ROAD IS DESIGNED TO ACCOMODATE AN AASHTO SU-30 TRUCK (APPROXIMATELY 30' LONG SINGLE UNIT TRUCK)
2. 2' CONTOURS SHOWN
3. THE CEMETARY IS A HISTORIC SITE. ANY WORK OR IMPROVEMENTS WITHIN THE HISTORIC SITE SHALL COMPLY WITH THE GOVERNING RESTRICTIONS. THE CONTRACTOR SHALL CONSULT WITH THE TOWN TO DETERMINE THE RESTRICTIONS.
4. NEW ACCESS EASEMENTS ARE NEEDED FOR ACCESS TO THE TREATMENT PLANT THROUGH THE PRIVATE PROPERTIES SHOWN. EASEMENTS ARE SHOWN FOR REFERENCE ONLY. FINAL DETAILS TO BE COORDINATED BY THE TOWN.

EARTHWORK ESTIMATE (CUBIC YARDS)*			
AREA	CUT	FILL	NET
NORTH DRIVE IMPROVEMENTS	101	94	7 CUT
WWTP ACCESS ROAD	4746	984	3762 CUT
WWTP PAD	993	897	96 CUT
LOWER WWTP SITE ACCESS RD	0	299	299 FILL
SEWER ACCESS RD	527	29	498 CUT
BROW DITCH	141	0	141 CUT
		TOTAL	4,266 CUT
*NO SHRINKAGE OR EXPANSION FACTORS APPLIED. EARTHWORK IS TO FINISHED GRADE. DEPTH TO SUBGRADE NOT ACCOUNTED FOR			

NO	BY	DATE	REVISIONS	DATE	APP

Professional Engineer
CERTIFICATE NO.
49100
KRISHAN GEVINDA GINIGE
10/31/25
DATE SIGNED
ARIZONA, U.S.A.

PREPARED BY:
DESIGNED BY:
DRAWN BY: NMW
CHECKED BY: KG
SCALE: AS SHOWN
DATE: 10/31/25
JOB NO. 19-1101CE

TITLE: GRADING SITE MAP, SURVEY CONTROL

JOB: JEROME WWTP
GRADING & UTILITIES PLANS
YAVAPAI COUNTY AZ

PREPARED BY:
SOUTHWESTERN ENVIRONMENTAL CONSULTANTS, INC
825 COVE PARKWAY
COTTONWOOD, AZ 86326
928-282-7787

SHEET
C2.0
10 OF 99 SHEETS

JOB NO. 19-1101CE

1579

These plans/documents have been prepared using technical knowledge that would be applied by other qualified registrants who practice the same profession in the same area and at the same time. Efforts have been made to be as accurate as possible.
© SEC, Inc. All Rights Reserved. This document is protected under the United States Copyright Act. No part may be reproduced in any form or by any means or stored in a database or retrieval system, without the prior written permission of SEC, Inc. These plans/documents have been prepared using technical knowledge that would be applied by other qualified registrants who practice the same profession in the same area and at the same time. Efforts have been made to be as accurate as possible. However, plans/documents could contain unintentional technical inaccuracies, typographical errors or omissions. Users of these plans/documents should understand that it is highly probable that errors and omissions will occur in any plan/document preparation process.

S:\land projects 2004 Engineering\19-1101CE Jerome WWTP\DWG\C3D\Plans\XBGRAD-19-1101CE.dwgS:\LAND PROJECTS 2004 ENGINEERING\19-1101CE JEROME WWTP\DWG\C3D\PLANS\XBGRAD-19-1101CE.DWG

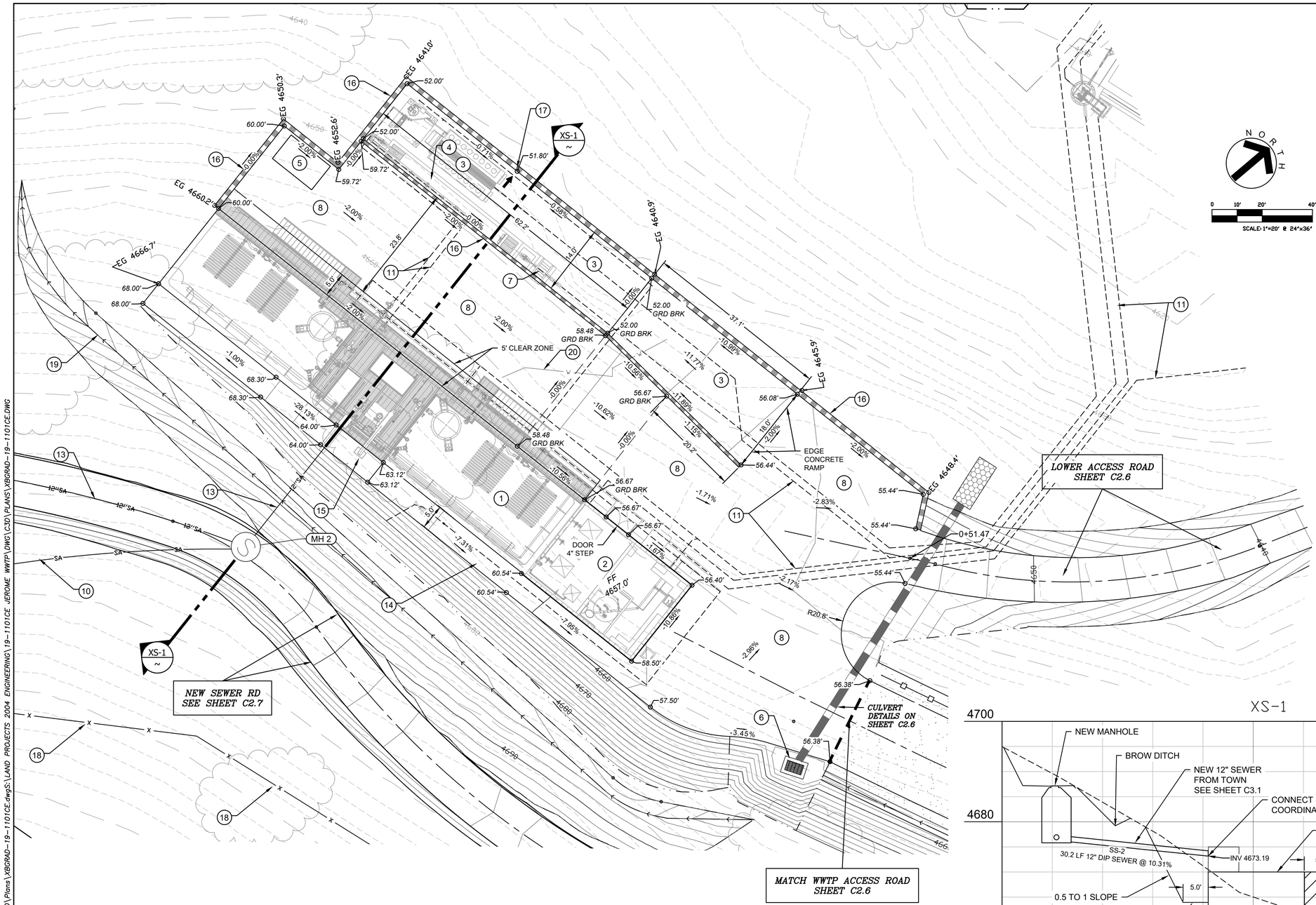

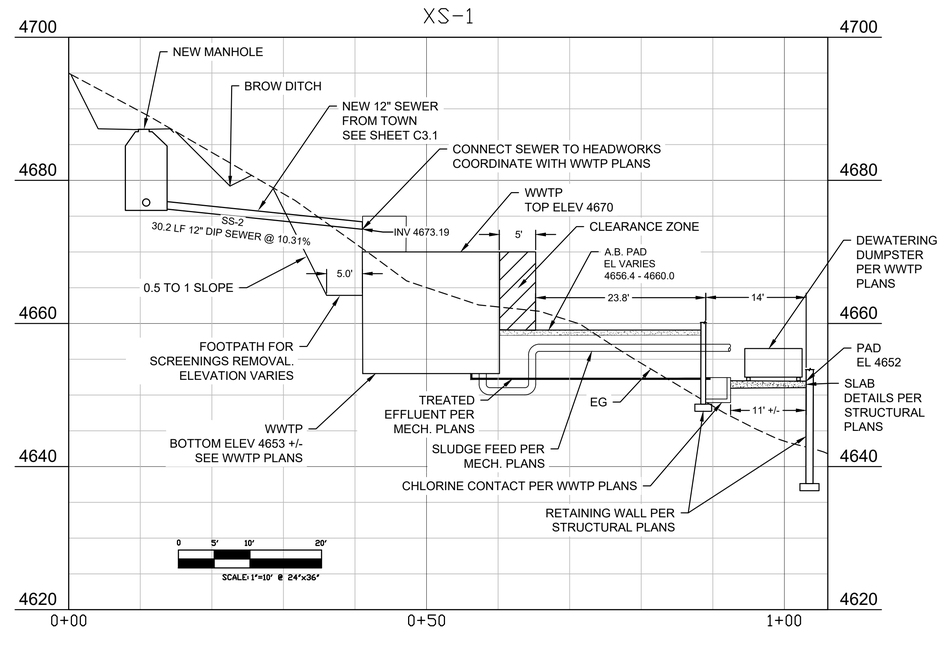

CALLOUTS-WWTP	
1	NEW WASTEWATER TREATMENT PLANT
2	BLOWER / OPERATOR BLDG PER WWTP PLANS
3	CONCRETE DUMPSTER PAD & RAMP FOR DEWATERING PER STRUCTURAL PLANS.
4	CHLORINE CONTACT PER WWTP PLANS
5	EMERGENCY BACKUP GENERATOR PER WWTP PLANS
6	CATCH BASIN & DRAIN PIPE. SEE SHEET C2.6
7	PROVIDE STAIRS & HANDRAILS TO DUMPSTER PAD PER WWTP PLANS
8	TREATEMENT PLANT PAD. 6" AB OVER 8" COMPACTED SUBGRADE.
9	NOT USED.
10	BID ALTERNATE SEWER. SEE SHEET C4.0
11	PIPING PER WWTP PLANS
12	EXISTING 12" SEWER FROM TOWN. SEE SHEET C3.0
13	NEW 12" SEWER FROM TOWN. SEE SHEET C3.0
14	PROVIDE 5' WIDE PATH FOR SCREENINGS REMOVAL HAND CART
15	PLANT SCREENINGS REMOVAL PER WWTP PLANS
16	RETAINING WALL. FG ELEVATIONS PER PLAN. DETAILS PER STRUCTURAL PLANS. PROVIDE SAFETY RAILS FOR PEDESTRIAN FALL PROTECTION. SEE NOTE 4.
17	GRADE DEWATERING PAD TO DRAIN TO WALL OPENING OR SCUPPER. DETAILS TO BE COORDINATED BY STRUCTURAL ENGINEER.
18	BID ALTERNATE: INSTALL BOULDER CATCH FENCE. SEE SHEET C2.7.
19	1.5' DEEP BROW DITCH
20	EXISTING PVC WATER LINE. TO BE REMOVED OR RELOCATED PER TREATMENT PLANT PLANS. SEE NOTE 3.

NOTES
1. RETAINING WALL FINISHED GRADE ELEVATIONS SHOWN. TOP OF WALL AND FOOTING ELEVATIONS PER STRUCTURAL DETAILS. BY OTHERS.
2. 2' CONTOURS SHOWN
3. REFER TO TREATMENT PLANT PLANS, NOTES AND SPECIFICATIONS FOR ADDITIONAL CONSTRUCTION REQUIREMENTS AND DETAILS. BY OTHERS.
4. ALL RETAINING WALLS SHALL HAVE SAFETY RAILS PER MSD 145 OR OTHER SIMILAR MEANS FOR PEDESTRIAN FALL PROTECTION. TO BE COORDINATED BY STRUCTURAL ENGINEER.
5. ALL DITCHES, PONDS, DRAINAGE FLOW PATHS SHALL BE LINED WITH RIP RAP TO A HEIGHT OF MIN DEPTH. RIP RAP NOT SHOWN FOR CLARITY.
6. ALL RIP RAP D50=6" x 12" DEEP w/GEOTEXTILE FABRIC UNDERLAY UNLESS OTHERWISE SPECIFIED.
7. ALL SLOPES STEEPER THAN 2:1 SHALL HAVE EROSION PROTECTION PER GEOTECHNICAL ENGINEER RECOMMENDATIONS.

ESTIMATE OF EARTHWORK QTY'S SHOWN ON SEE SHEET C2.0

N O R T H

0 10' 20' 40'
SCALE: 1"=20' @ 24"x36"

NO	BY	DATE	REVISIONS	DATE	APP

Professional Engineer
CERTIFICATE NO.
49106
KRISHAN GEVINDA GINIGE
10/31/25
DATE SIGNED
ARIZONA, U.S.A.

PREPARED BY:
DESIGNED BY:
DRAWN BY: NMW
CHECKED BY: KG
SCALE: AS SHOWN
DATE 10/31/25
JOB NO. 19-1101CE

TITLE
WWTP SITE GRADING-10SC

JOB
JEROME WWTP
GRADING & UTILITIES PLANS
YAVAPAI COUNTY AZ

PREPARED BY:
SEC Inc.
SOUTHWESTERN ENVIRONMENTAL CONSULTANTS, INC
825 COVE PARKWAY
COTTONWOOD, AZ 86326
928-282-7787

SEC, Inc., All Rights Reserved. This document is protected under the United States Copyright Act. No part may be reproduced in any form or by any means or stored in a database or retrieval system, without the prior written permission of SEC, Inc. However, plans/documents could contain unintentional technical inaccuracies, typographical errors or omissions. Users of these plans/documents should understand that it is highly probable that errors and omissions will occur in any plan/document preparation process.

SHEET
C2.1
11 OF 99 SHEETS

JOB NO. 19-1101CE
1580

MATCH SHEET C2.0

CALLOUTS-NORTH DRIVE	
1	INSTALL NEW WIDENED ROAD PER DETAIL 2, SHEET C1.2
2	REMOVE EXISTING TREE AS NEEDED TO ACCOMODATE NEW RADIUS AT HWY 89A
3	SAWCUT & REMOVE 2' ASPHALT FOR NEW CONCRETE CONSTRUCTION. REPLACE PER ADOT SPECS.
4	PROVIDE CONCRETE APRON AT CONNECTION TO HWY 89A. 6" CONCRETE OVER 6" AB. PROVIDE SINGLE MAT #4 BARS AT 18" OC BW, CENTERED IN SLAB. PROVIDE EXPANSION & CONTRACTION JOINTS PER ADOT STD DWG C-05.20.
5	MATCH EXISTING DRIVEWAY OR SIDE ROAD

NOTES
1. 2' CONTOURS SHOWN
2. A PERMIT IS REQUIRED FOR ALL WORK WITHIN ADOT RIGHT OF WAY.
3. NEW ACCESS EASEMENTS ARE REQUIRED AT PRIVATE PROPERTIES AS SHOWN IN THESE PLANS. SHOWN FOR REFERENCE ONLY. FINAL DETAILS TO BE COORDINATED BY THE TOWN.

BASELINE EXISTING CEMETERY ROAD
SEE SHEET C2.0

END NORTH DRIVE @ 5+25
BEGIN CEMETERY ROAD @ 15+22.53

EXISTING CEMETERY GATE

END=5+25
PT=5+21.64
4+85
R30.00'
PRC=5+09.33
PC=4+94.75
4+00
R30.00'
PT=4+75.51
R165.00'
PRC=4+39.57

BEGIN EXISTING GRAVEL PARKING AREA,
3+87 +/-

PT=3+54.20
4+00
R70.69'

EXISTING 8' POWER LINE ESMT

NEW ACCESS ESMT REQ'D
APN 401-03-001P

PC=3+30.83

BASELINE NORTH DRIVE

10'
PT=3+02.37
3+00
R22.00'
PRC=2+76.13

TRANSITION LANE WIDTH FROM 9' TO 10'
STA 2+76.13 TO 3+02.37

USE 1:1 SLOPE AND/OR ADD WALL TO FIT NEW EASEMENT. PROVIDE SHOP DWG TO ENGINEER FOR APPROVAL PRIOR TO CONST.

NEW ACCESS EASEMENT REQ'D
APN 401-11-007C
185 SF +/-

0+60.84, 9.00' LT
FG=4868.29

PT=0+52.48
R30.00'
0+25.64, 9.00' LT
FG=4874.10
R20.00'
R30.00'
1+00
2+00
20' R/W
16.0'
PC=1+68.21
R110.00'
30°-27'-45"
16'
0+14.34, 23.50' LT
FG=4876.52
PC=0+14.97
R16.00'
BEGIN=0+00
0+12.09, 34.29' RT
FG=4873.67
0+60.84, 9.00' RT
FG=4868.29

NEW ACCESS EASEMENT REQ'D
APN 401-11-031A
25 SF +/-

TRANSITION LANE WIDTH FROM 18' TO 9'
STA 2+30 TO 2+50

NOTE: THERE IS AN EXISTING WATER UTILITY IN THIS AREA. LOCATION AND DEPTH TBD AT TIME OF CONSTRUCTION

EXISTING BLDG HAS BEEN REMOVED
A NEW BLDG IS PENDING

APN 401-11-019U
PATHWAY REAL ESTATE

APN 401-03-001N
TOWN OF JEROME

APN 401-11-005A
PATHWAY REALTY

APN 401-11-005B
CANTO

APN 401-11-006
PETERSON

APN 401-11-007C
LEACHMAN

APN 401-11-008
McWHIRTER & HUERTA

APN 401-11-031A
CROSBY

APN 401-03-001P
JEROME VERDE DEVELOPMENT CO.

N O R T H

0 10' 20' 40'
SCALE: 1"=20' @ 24"x36"

Profile View of NORTH DRIVE

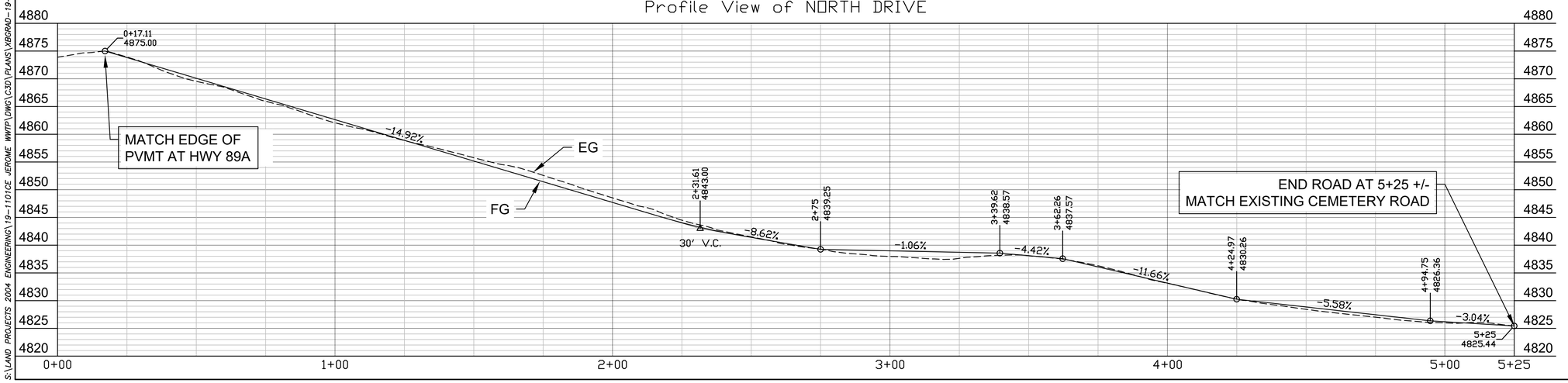

S:\LAND PROJECTS 2004 ENGINEERING\19-1101CE JEROME WWTP\DWG\C3D\PLANS\XBGRAD-19-1101CE.DWG

NO	BY	DATE	REVISIONS	DATE	APP

Professional Engineer
CERTIFICATE NO.
49106
KRISHAN GEVINDA GINIGE
10/31/25
DATE SIGNED
ARIZONA, U.S.A.

PREPARED BY:
DESIGNED BY:
DRAWN BY: NMW
CHECKED BY: KG
SCALE: AS SHOWN
DATE 10/31/25
JOB NO. 19-1101CE

TITLE
NORTH DR IMPROVEMENTS

JOB
JEROME WWTP
GRADING & UTILITIES PLANS
YAVAPAI COUNTY AZ

PREPARED BY:
SOUTHWESTERN ENVIRONMENTAL CONSULTANTS, INC
825 COVE PARKWAY
COTTONWOOD, AZ 86326
928-282-7787

SHEET
C2.2
12 OF 99 SHEETS

JOB NO. 19-1101CE
1581

SEC, Inc., All Rights Reserved. This document is protected under the United States Copyright Act. No part may be reproduced in any form or by any means or stored in a database or retrieval system, without the prior written permission of SEC, Inc. These plans/documents have been prepared using technical knowledge that would be applied by other qualified registrants who practice the same profession in the same area and at the same time. Efforts have been made to be as accurate as possible. However, plans/documents could contain unintentional technical inaccuracies, typographical errors or omissions. Users of these plans/documents should understand that it is highly probable that errors and omissions will occur in any plan/document preparation process.

MATCH SHEET C2.0

MATCH SHEET C2.4

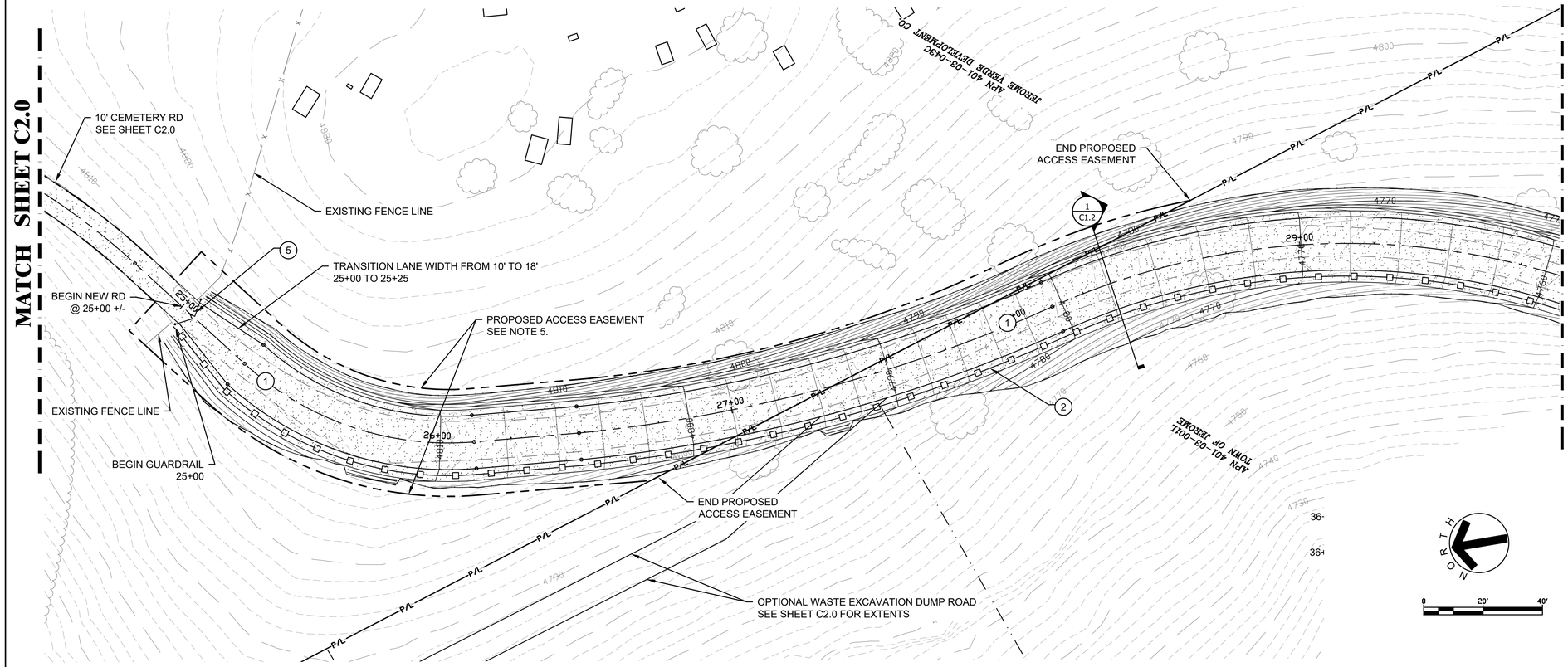

CALLOUTS-WWTP ACCESS RD	
1	INSTALL ACCESS ROAD PER DETAIL 1, SHEET C1.2
2	INSTALL GUARD RAIL PER ADOT STDS OR EQUAL
3	CATCH BASIN PER MSD 537, DOUBLE GRATE & 18" CMP. SEE PROFILE ON THIS SHEET
4	INSTALL 4' WIDE RIP RAP AT DRAIN PIPE OUTLET. SEE NOTE 2.
5	INSTALL 12' WIDE CHAIN LINK SWING GATE AT EXISTING FENCE LINE PER MSD 160 OR AS DIRECTED BY THE TOWN.

NOTES

1. THE CEMETARY IS A HISTORICAL SITE. ANY IMPROVEMENTS SHALL COMPLY WITH THE RESTRICTIONS FOR THE SITE. CONTRACTOR SHALL CONSULT WITH THE TOWN FOR DETAILS.
2. ALL RIP RAP SHALL BE D50=6" x 12" DEEP w/GEOTEXTILE FABRIC UNDERLAY UNLESS OTHERWISE INDICATED.
3. ALL SLOPES STEEPER THAN 2:1 SHALL HAVE EROSION PROTECTION PER GEOTECHNICAL ENGINEER RECOMMENDATIONS.
4. LINE ALL PONDS, DITCHES, DRAINAGE FLOW PATHS WITH RIP RAP TO HEIGHT=MIN. DEPTH. RIP RAP NOT SHOWN FOR CLARITY.
5. PROPOSED ACCESS EASEMENTS ARE REQUIRED THROUGH THE PRIVATE PROPERTIES SHOWN IN THESE PLANS. SHOWN FOR REFERENCE ONLY. FINAL DETAILS TO BE COORDINATED BY THE TOWN.

Profile View of ACCESS ROAD CL

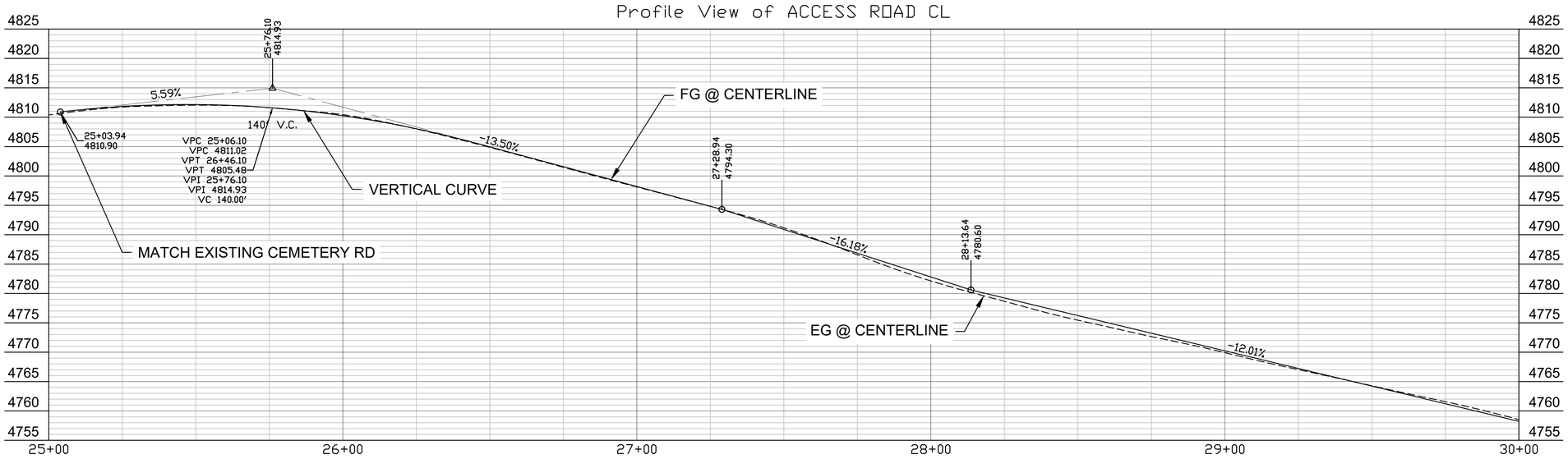

NO	BY	DATE	REVISIONS	DATE	APP

Professional Engineer
CERTIFICATE NO.
49106
KRISHAN GEVINDA GINIGE
10/31/25
DATE SIGNED
ARIZONA, U.S.A.

PREPARED BY:
DESIGNED BY:
DRAWN BY: NMW
CHECKED BY: KG
SCALE: AS SHOWN
DATE 10/31/25
JOB NO. 19-1101CE

TITLE
WWTP ACCESS RD P&P 25+00+TO 30+00

JOB
JEROME WWTP
GRADING & UTILITIES PLANS
YAVAPAI COUNTY AZ

PREPARED BY:
SEC Inc
SOUTHWESTERN ENVIRONMENTAL CONSULTANTS, INC
825 COVE PARKWAY
COTTONWOOD, AZ 86326
928-282-7787

SHEET
C2.3
13 OF 99 SHEETS

JOB NO. 19-1101CE
1582

SEC, Inc., All Rights Reserved. This document is protected under the United States Copyright Act. No part may be reproduced in any form or by any means or stored in a database or retrieval system, without the prior written permission of SEC, Inc. These plans/documents have been prepared using technical knowledge that would be applied by other qualified registrants who practice the same profession in the same area and at the same time. Efforts have been made to be as accurate as possible. However, plans/documents could contain unintentional technical inaccuracies, typographical errors or omissions. Users of these plans/documents should understand that it is highly probable that errors and omissions will occur in any plan/document preparation process.

S:\LAND PROJECTS 2004 ENGINEERING\19-1101CE JEROME WWTP\DWG\C3D\PLANS\XBGRAD-19-1101CE.DWG

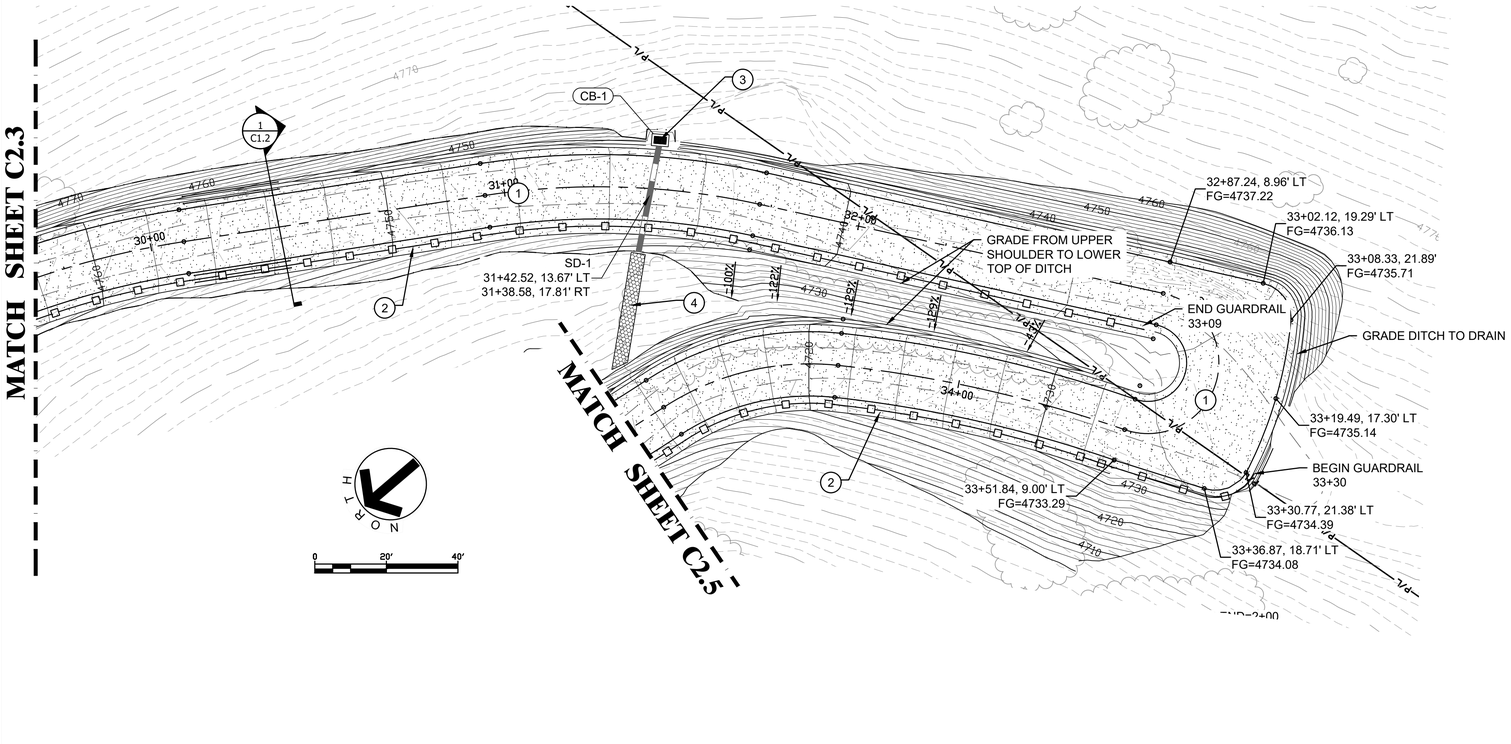

CALLOUTS-WWTP ACCESS RD	
1	INSTALL ACCESS ROAD PER DETAIL 1, SHEET C1.2
2	INSTALL GUARD RAIL PER ADOT STDS OR EQUAL
3	CATCH BASIN PER MSD 537, DOUBLE GRATE & 18" CMP. SEE PROFILE ON THIS SHEET
4	INSTALL 4' WIDE RIP RAP AT DRAIN PIPE OUTLET. SEE NOTE 2.
5	INSTALL 12' WIDE CHAIN LINK SWING GATE AT EXISTING FENCE LINE PER MSD 160 OR AS DIRECTED BY THE TOWN.

NOTES
1. THE CEMETARY IS A HISTORICAL SITE. ANY IMPROVEMENTS SHALL COMPLY WITH THE RESTRICTIONS FOR THE SITE. CONTRACTOR SHALL CONSULT WITH THE TOWN FOR DETAILS.
2. ALL RIP RAP SHALL BE D50=6" x 12" DEEP w/GEOTEXTILE FABRIC UNDERLAY UNLESS OTHERWISE INDICATED.
3. ALL SLOPES STEEPER THAN 2:1 SHALL HAVE EROSION PROTECTION PER GEOTECHNICAL ENGINEER RECOMMENDATIONS.
4. LINE ALL PONDS, DITCHES, DRAINAGE FLOW PATHS WITH RIP RAP TO HEIGHT=MIN. DEPTH. RIP RAP NOT SHOWN FOR CLARITY.
5. PROPOSED ACCESS EASEMENTS ARE REQUIRED THROUGH THE PRIVATE PROPERTIES SHOWN IN THESE PLANS. SHOWN FOR REFERENCE ONLY. FINAL DETAILS TO BE COORDINATED BY THE TOWN.

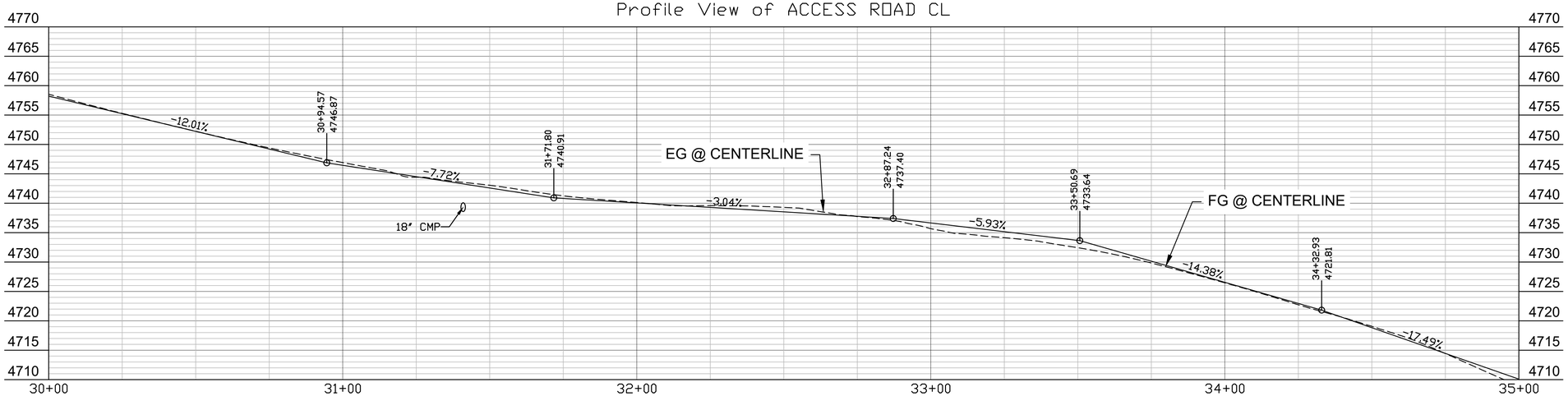

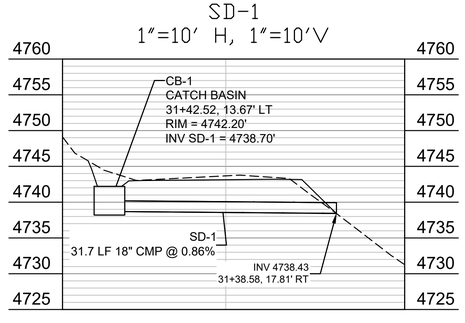

NO	BY	DATE	REVISIONS	DATE	APP

Professional Engineer Seal
CERTIFICATE NO.
49106
KRISHAN GEVINDA GINIGE
10/31/25
DATE SIGNED
ARIZONA, U.S.A.

PREPARED BY:
DESIGNED BY:
DRAWN BY: NMW
CHECKED BY: KG
SCALE: AS SHOWN
DATE 10/31/25
JOB NO. 19-1101CE

TITLE
WWTP ACCESS RD P&P 30+00 TO 35+00

JOB
JEROME WWTP
GRADING & UTILITIES PLANS
YAVAPAI COUNTY AZ

PREPARED BY:
SOUTHWESTERN ENVIRONMENTAL CONSULTANTS, INC
825 COVE PARKWAY
COTTONWOOD, AZ 86326
928-282-7787

SHEET
C2.4
14 OF 99 SHEETS

JOB NO. 19-1101CE
1583

© SEC, Inc., All Rights Reserved. This document is protected under the United States Copyright Act. No part may be reproduced in any form or by any means or stored in a database or retrieval system, without the prior written permission of SEC, Inc. These plans/documents have been prepared using technical knowledge that would be applied by other qualified registrants who practice the same profession in the same area and at the same time. Efforts have been made to be as accurate as possible. However, plans/documents could contain unintentional technical inaccuracies, typographical errors or omissions. Users of these plans/documents should understand that it is highly probable that errors and omissions will occur in any plan/document preparation process.

S:\LAND PROJECTS 2004 ENGINEERING\19-1101CE JEROME WWTP\DWG\C3D\PLANS\XBGRAD-19-1101CE.DWG

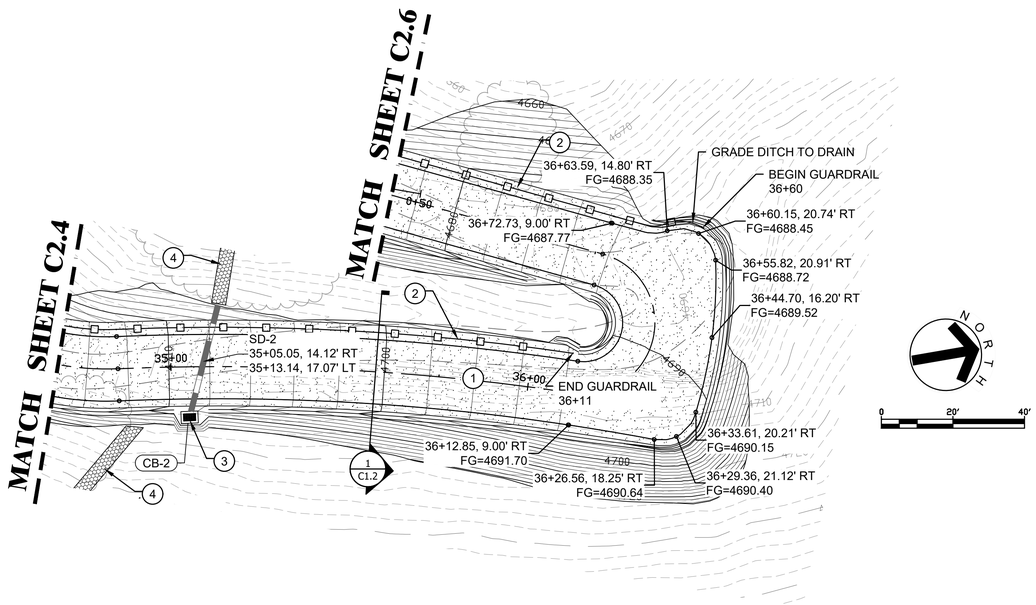

CALLOUTS-WWTP ACCESS RD	
1	INSTALL ACCESS ROAD PER DETAIL 1, SHEET C1.2
2	INSTALL GUARD RAIL PER ADOT STDS OR EQUAL
3	CATCH BASIN PER MSD 537, DOUBLE GRATE & 18" CMP. SEE PROFILE ON THIS SHEET
4	INSTALL 4' WIDE RIP RAP AT DRAIN PIPE OUTLET. SEE NOTE 2.
5	INSTALL 12' WIDE CHAIN LINK SWING GATE AT EXISTING FENCE LINE PER MSD 160 OR AS DIRECTED BY THE TOWN.

NOTES

1. THE CEMETARY IS A HISTORICAL SITE. ANY IMPROVEMENTS SHALL COMPLY WITH THE RESTRICTIONS FOR THE SITE. CONTRACTOR SHALL CONSULT WITH THE TOWN FOR DETAILS.
2. ALL RIP RAP SHALL BE D50=6" x 12" DEEP w/GEOTEXTILE FABRIC UNDERLAY UNLESS OTHERWISE INDICATED.
3. ALL SLOPES STEEPER THAN 2:1 SHALL HAVE EROSION PROTECTION PER GEOTECHNICAL ENGINEER RECOMMENDATIONS.
4. LINE ALL PONDS, DITCHES, DRAINAGE FLOW PATHS WITH RIP RAP TO HEIGHT=MIN. DEPTH. RIP RAP NOT SHOWN FOR CLARITY.
5. PROPOSED ACCESS EASEMENTS ARE REQUIRED THROUGH THE PRIVATE PROPERTIES SHOWN IN THESE PLANS. SHOWN FOR REFERENCE ONLY. FINAL DETAILS TO BE COORDINATED BY THE TOWN.

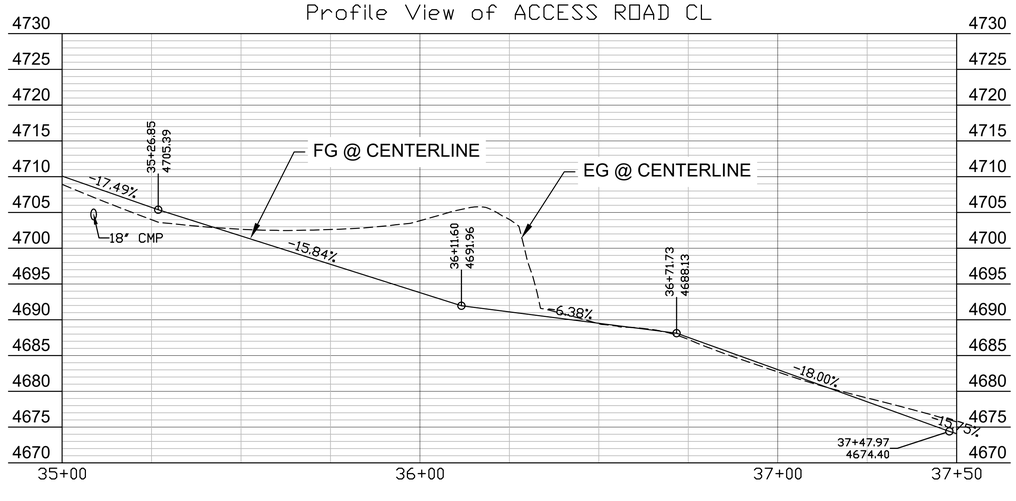

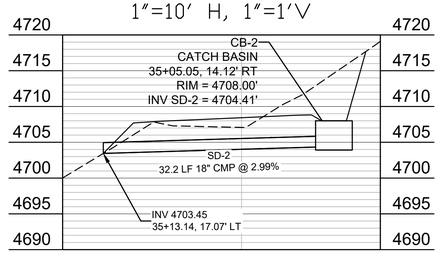

NO	BY	DATE	REVISIONS	DATE	APP

Item I.

Professional Engineer
49108
KRISHAN GEVINDA GINIGE
10/31/25
CERTIFICATE NO.
DATE SIGNED
ARIZONA, U.S.A.

PREPARED BY:
DESIGNED BY:
DRAWN BY: NMW
CHECKED BY: KG
SCALE: AS SHOWN
DATE 10/31/25
JOB NO. 19-1101CE

TITLE
WWTP ACCESS RD P&P 35+00 TO 37+50

JOB
JEROME WWTP
GRADING & UTILITIES PLANS
YAVAPAI COUNTY AZ

PREPARED BY:
SOUTHWESTERN ENVIRONMENTAL CONSULTANTS, INC
825 COVE PARKWAY
COTTONWOOD, AZ 86326
928-282-7787

SHEET
C2.5
15 OF 99 SHEETS

JOB NO. 19-1101CE
1584

Professional engineering documents have been prepared using technical knowledge that would be applied by other qualified registrants who practice the same profession in the same area and at the same time. Efforts have been made to be as accurate as possible. However, plans/documents could contain unintentional technical inaccuracies, typographical errors or omissions. Users of these plans/documents should understand that it is highly probable that errors and omissions will occur in any plan/document preparation process.

© SEC, Inc., All Rights Reserved. This document is protected under the United States Copyright Act. No part may be reproduced in any form or by any means or stored in a database or retrieval system, without the prior written permission of SEC, Inc. These plans/documents have been prepared for the exclusive use of the client for the specific project discussed. Unauthorized use of these plans/documents without the express written permission of and appropriate compensation to SEC, Inc. will be at user's sole risk and without liability to SEC, Inc. User agrees to indemnify and hold harmless SEC, Inc. from all claims, damages, losses and expenses including attorney's fees arising out of or resulting therefrom.

S:\LAND PROJECTS 2004 ENGINEERING\19-1101CE JEROME WWTP\DWG\C3D\PLANS\XBGRAD-19-1101CE.DWG

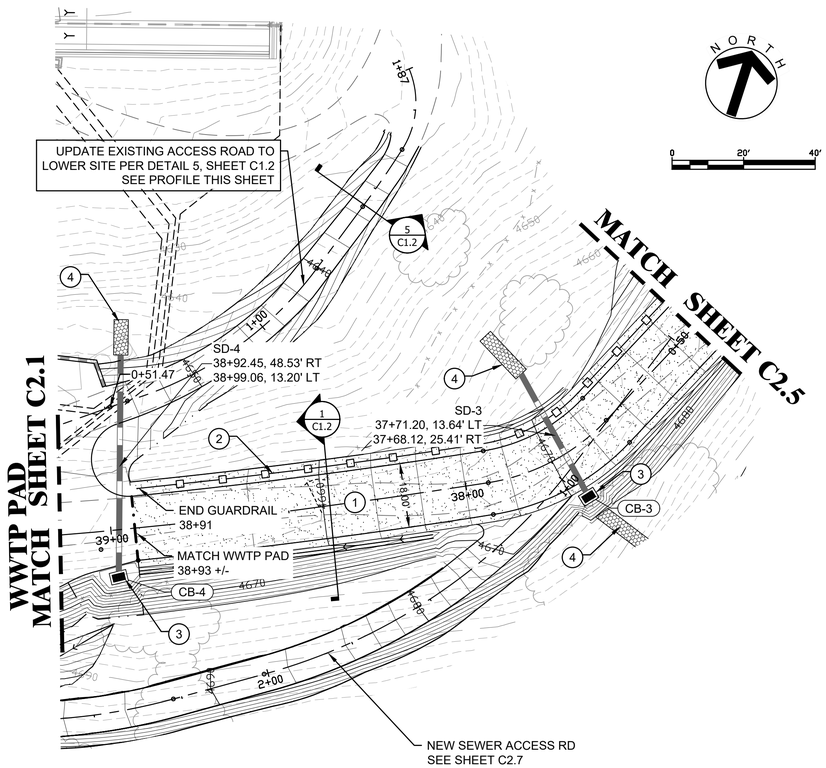

CALLOUTS-WWTP ACCESS RD	
1	INSTALL ACCESS ROAD PER DETAIL 1, SHEET C1.2
2	INSTALL GUARD RAIL PER ADOT STDS OR EQUAL
3	CATCH BASIN PER MSD 537, DOUBLE GRATE & 18" CMP. SEE PROFILE ON THIS SHEET
4	INSTALL 4' WIDE RIP RAP AT DRAIN PIPE OUTLET. SEE NOTE 2.
5	INSTALL 12' WIDE CHAIN LINK SWING GATE AT EXISTING FENCE LINE PER MSD 160 OR AS DIRECTED BY THE TOWN.

NOTES
1. THE CEMETARY IS A HISTORICAL SITE. ANY IMPROVEMENTS SHALL COMPLY WITH THE RESTRICTIONS FOR THE SITE. CONTRACTOR SHALL CONSULT WITH THE TOWN FOR DETAILS.
2. ALL RIP RAP SHALL BE D50=6" x 12" DEEP w/GEOTEXTILE FABRIC UNDERLAY UNLESS OTHERWISE INDICATED.
3. ALL SLOPES STEEPER THAN 2:1 SHALL HAVE EROSION PROTECTION PER GEOTECHNICAL ENGINEER RECOMMENDATIONS.
4. LINE ALL PONDS, DITCHES, DRAINAGE FLOW PATHS WITH RIP RAP TO HEIGHT=MIN. DEPTH. RIP RAP NOT SHOWN FOR CLARITY.
5. PROPOSED ACCESS EASEMENTS ARE REQUIRED THROUGH THE PRIVATE PROPERTIES SHOWN IN THESE PLANS. SHOWN FOR REFERENCE ONLY. FINAL DETAILS TO BE COORDINATED BY THE TOWN.

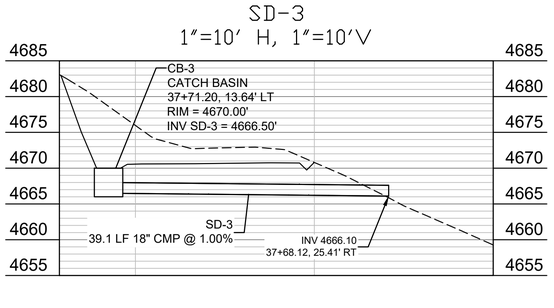

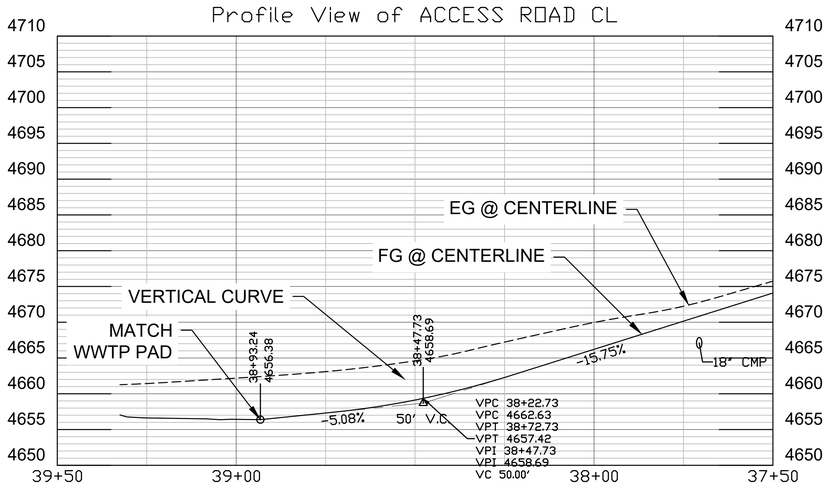

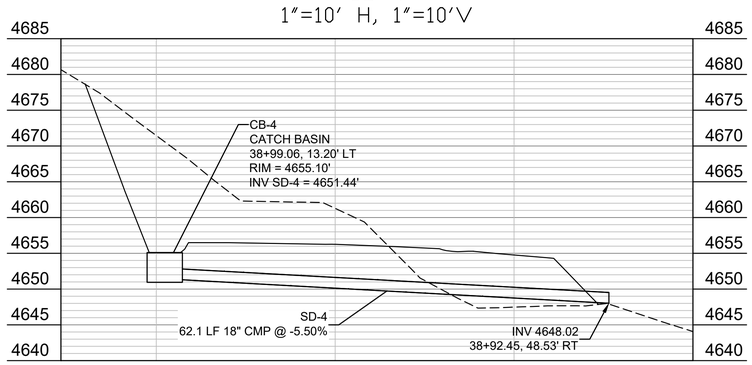

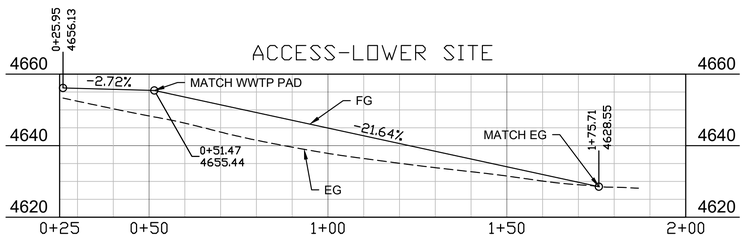

Item I.

NO	BY	DATE	REVISIONS	DATE	APP



PREPARED BY:
DESIGNED BY:
DRAWN BY: NMW
CHECKED BY: KG
SCALE: AS SHOWN
DATE 10/31/25
JOB NO. 19-1101CE

TITLE
RD P&P 37+50 TO
WWTP ACCESS RD P&P
39+75

JOB
JEROME WWTP
GRADING & UTILITIES PLANS
YAVAPAI COUNTY AZ

PREPARED BY:
SOUTHWESTERN ENVIRONMENTAL CONSULTANTS, INC
825 COVE PARKWAY
COTTONWOOD, AZ 86326
928-282-7787

SHEET
C2.6
16 OF 99 SHEETS

JOB NO. 19-1101CE
1585

© SEC, Inc., All Rights Reserved. This document is protected under the United States Copyright Act. No part may be reproduced in any form or by any means or stored in a database or retrieval system, without the prior written permission of SEC, Inc. These plans/documents have been prepared using technical knowledge that would be applied by other qualified registrants who practice the same profession in the same area and at the same time. Efforts have been made to be as accurate as possible. However, plans/documents could contain unintentional technical inaccuracies, typographical errors or omissions. Users of these plans/documents should understand that it is highly probable that errors and omissions will occur in any plan/document preparation process.

S:\LAND PROJECTS 2004 ENGINEERING\19-1101CE JEROME WWTP\DWG\C3D\PLANS\XBGRAD-19-1101CE.DWG

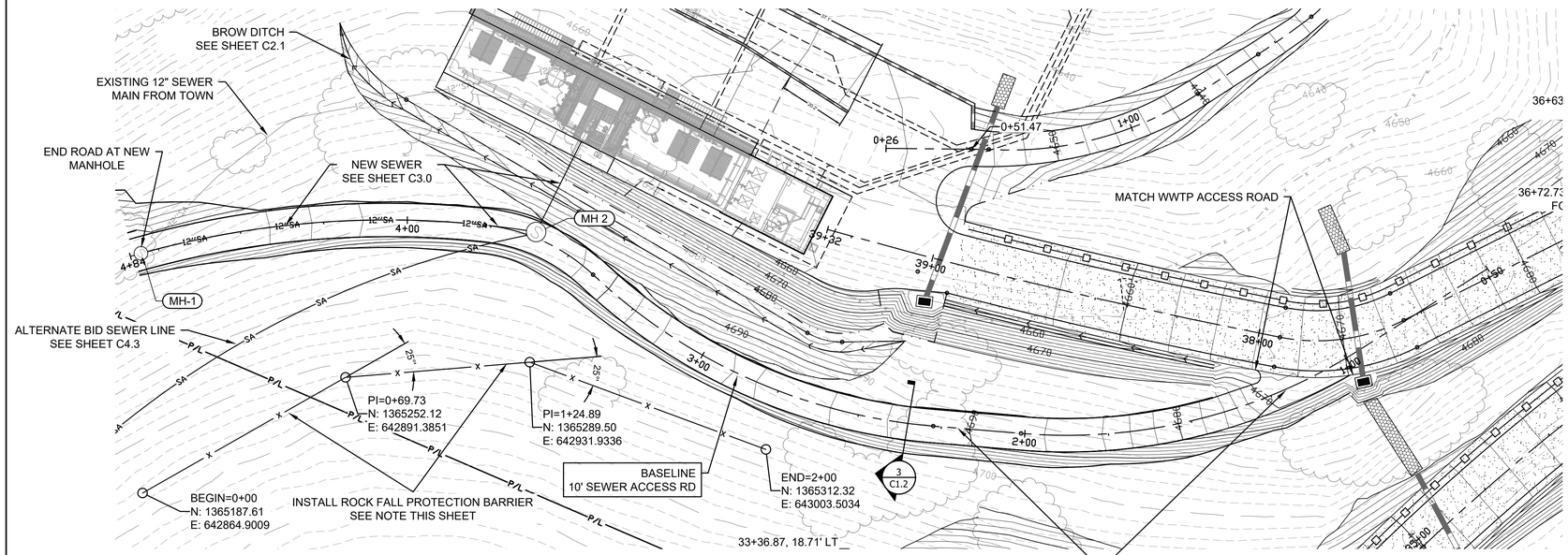

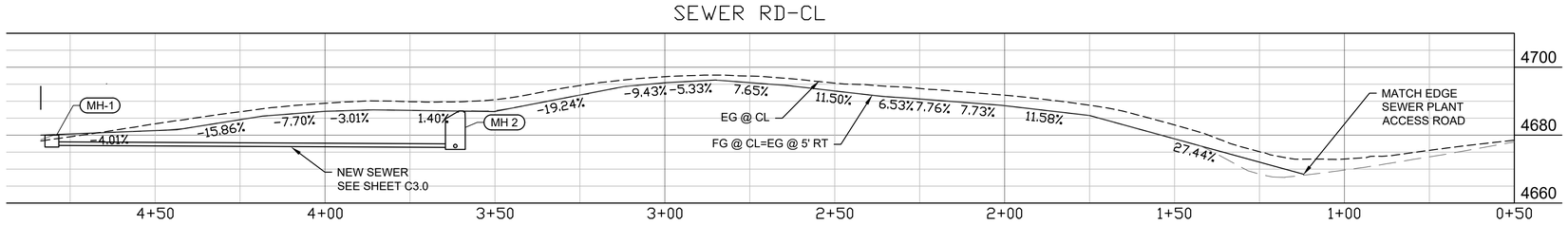

ROCK FALL PROTECTION BARRIER
PROVIDE ROCK FALL PROTECTION BARRIER. ALTERNATE BID ITEM. SEE PLAN SPECIFICATIONS FOR DETAILS.

NO	BY	DATE	REVISIONS	DATE	APP

49108
KRISHAN
GEVINDA
GINIGE
10/31/25
ARIZONA, U.S.A.

PREPARED BY:
DESIGNED BY:
DRAWN BY: NMW
CHECKED BY: KG
SCALE: AS SHOWN
DATE 10/31/25
JOB NO. 19-1101CE

TITLE
NEW SEWER ACCESS ROAD

JOB
JEROME WWTP
GRADING & UTILITIES PLANS
YAVAPAI COUNTY AZ

PREPARED BY:
SOUTHWESTERN ENVIRONMENTAL CONSULTANTS, INC
825 COVE PARKWAY
COTTONWOOD, AZ 86326
928-282-7787

SHEET
C2.7
17 OF 99 SHEETS

JOB NO. 19-1101CE
1586

SEC, Inc. All Rights Reserved. This document is protected under the United States Copyright Act. No part may be reproduced in any form or by any means or stored in a database or retrieval system, without the prior written permission of SEC, Inc. These plans/documents have been prepared using technical knowledge that would be applied by other qualified registrants who practice the same profession in the same area and at the same time. Efforts have been made to be as accurate as possible. However, plans/documents could contain unintentional technical inaccuracies, typographical errors or omissions. Users of these plans/documents should understand that it is highly probable that errors and omissions will occur in any plan/document preparation process.

S:\LAND PROJECTS 2004 ENGINEERING\19-1101CE JEROME WWTP\DWG\C3D\PLANS\XBGRAD-19-1101CE.DWG

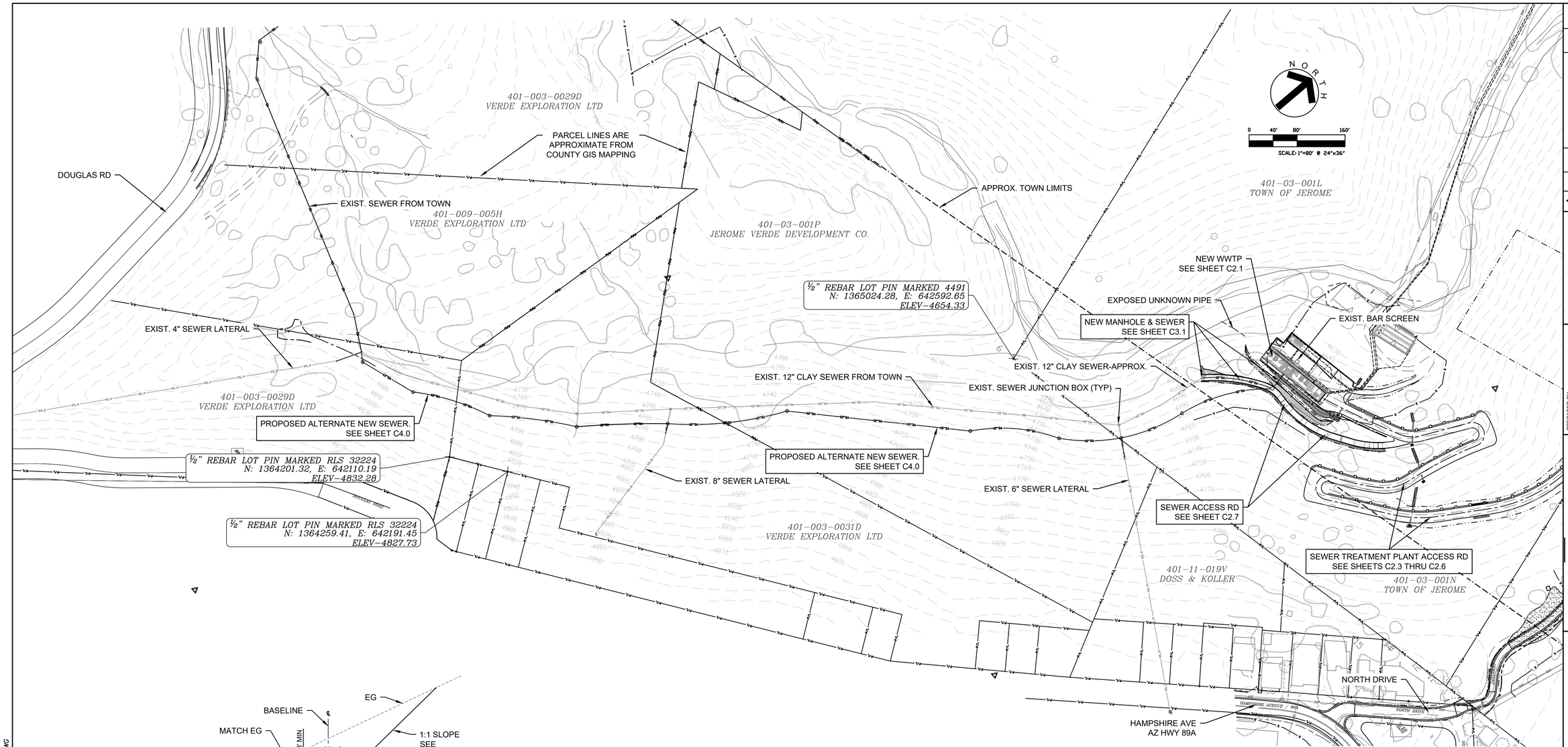

1 TYPICAL SEWER ROAD SECTION

1"=6'

CONSTRUCTION NOTES

1. THE EXISTING SEWER PIPES ARE VERY SHALLOW. EXTREME CAUTION IS REQUIRED TO ENSURE THE PIPES ARE PROTECTED DURING CONSTRUCTION. EXISTING SEWER TO REMAIN OPERATIONAL AT ALL TIMES UNTIL THE NEW SEWER IS ACTIVATED.
2. ALL TEMPORARY AND NEW SEWER PIPES AND STRUCTURES SHALL BE INSTALLED PER THE SPECIFICATIONS PROVIDED BY THE SEWER PLANT ENGINEER.

STRUCTURES					
STRUCTURE	DESC	RIM	INVERT	DEPTH (FT)	LOCATION
MH-1	MANHOLE-48"	4680.000'	OUT = 4677.00'	3.00	N: 1365243.77 E: 642820.46
MH 2	MANHOLE-60"	4687.137'	IN = 4676.40' OUT = 4676.30'	10.83	N: 1365321.33 E: 642909.50

PIPES			
PIPE	SIZE & TYPE	LENGTH	SLOPE
SS-1	12" FPVC	119.01'	0.50%
SS-2	12" DIP SEWER	30.20'	10.31%

ESTIMATE OF SEWER QTY'S		
ITEM	QTY	UNITS
12" PVC PIPE	100	LF
12" DIP	42	LF
48" MANHOLE	1	EA
60" DROP MANHOLE	1	EA

NO	BY	DATE	REVISIONS	DATE	APP

Registered Professional Engineer (Civil)
CERTIFICATE NO.
49108
KRISHAN GEVINDA GINIGE
10/31/25
DATE SIGNED
ARIZONA, U.S.A.

PREPARED BY:
DESIGNED BY:
DRAWN BY: NMW
CHECKED BY: KG
DATE: 10/31/25
SCALE: AS SHOWN
JOB NO. 19-1101CE

TITLE: NEW SEWER SITE MAP, SURVEY CONTROL

JOB: JEROME WWTP
GRADING & UTILITIES PLANS
YAVAPAI COUNTY AZ

PREPARED BY:
SOUTHWESTERN ENVIRONMENTAL CONSULTANTS, INC
825 COVE PARKWAY
COTTONWOOD, AZ 86326
928-282-7787

SHEET
C3.0
18 OF 99 SHEETS

JOB NO. 19-1101CE
1587

SEC, Inc., All Rights Reserved. This document is protected under the United States Copyright Act. No part may be reproduced in any form or by any means or stored in a database or retrieval system, without the prior written permission of SEC, Inc. These plans/documents have been prepared using technical knowledge that would be applied by other qualified registrants who practice this same profession in the same area and at the same time. Efforts have been made to be as accurate as possible. However, plans/documents could contain unintentional technical inaccuracies, typographical errors or omissions. Users of these plans/documents should understand that it is highly probable that errors and omissions will occur in any plan/document preparation process.

S:\LAND PROJECTS 2004 ENGINEERING\19-1101CE JEROME WWTP\DWG\C3D\PLANS\XBSAN-19-1101CE.DWG

401-03-001L
TOWN OF JEROME

401-03-001N
TOWN OF JEROME

APPROXIMATE TOWN LIMITS

EXISTING 12" CLAY SEWER

BEGIN=0+10
N: 1,365,243.77
E: 642,820.46

BROW DITCH
SEE SHEET C2.1

SEWER ROAD
SEE SHEET C2.7

INSTALL NEW MANHOLE AT EXISTING SEWER

CURVED PIPE R275.00

ALTERNATE SEWER
SEE SHEET C4.0

ROCK FALL BARRIER
SEE SHEET C2.7

SEWER ACCESS ROAD
SEE SHEET C2.7

CONNECT TO NEW WWTP
SEE GRADING PLAN
SHEET C2.1

EXISTING BAR SCREEN

NEW WWTP

SEE SHEET C3.0
FOR EXISTING
JUNCTION BOX

SEWER CALLOUTS. SEE CONSTRUCTION NOTES ON SHEET C3.0	
1	INSTALL 12" FPVC SEWER PIPE. CURVE PIPE @ 275' MIN. RADIUS. SEE NOTE 2, SHEET C3.0
2	INSTALL 12" DIP SEWER LINE
3	INSTALL 48" FLAT TOP SEWER MANHOLE PER MSD 420-1
4	INSTALL 60" SEWER MANHOLE PER MSD 420-1

NORTH

0 10' 20'

NEW SEWER
0+00 TO 2+00

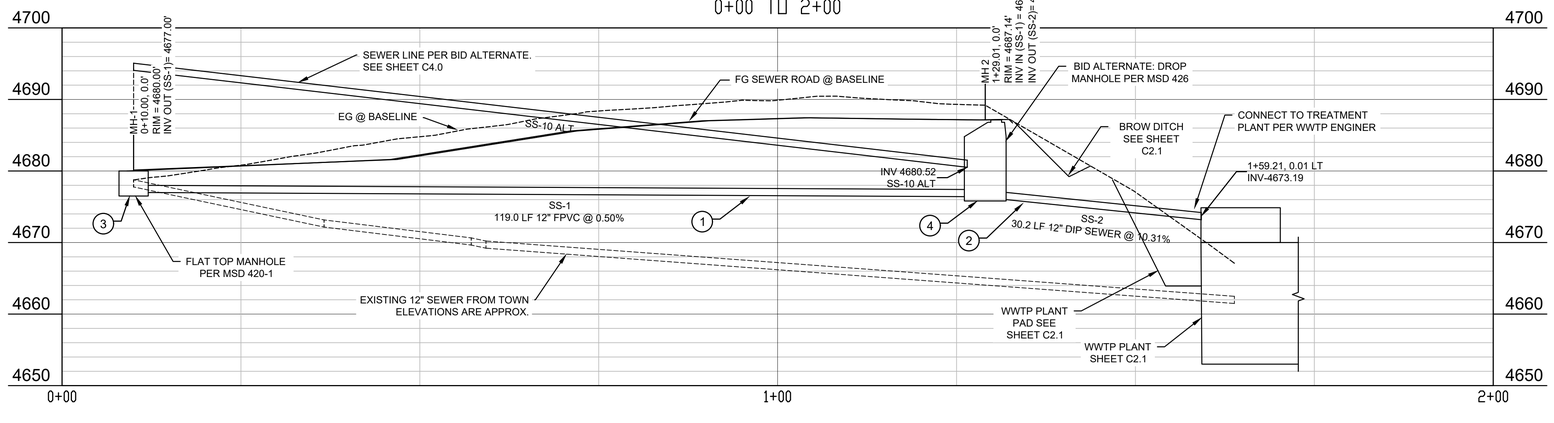

NO	BY	DATE	REVISIONS	DATE	APP

Professional Engineer
CERTIFICATE NO.
49100
KRISHAN
GEVINDA
GINIGE
10/31/25
DATE SIGNED
ARIZONA, U.S.A.

PREPARED BY:
DESIGNED BY:
DRAWN BY: NMW
CHECKED BY: KG
SCALE: AS SHOWN
DATE 10/31/25
JOB NO. 19-1101CE

TITLE
NEW SEWER P&P

JOB
JEROME WWTP
GRADING & UTILITIES PLANS
YAVAPAI COUNTY AZ

PREPARED BY:
SOUTHWESTERN ENVIRONMENTAL CONSULTANTS, INC
825 COVE PARKWAY
COTTONWOOD, AZ 86326
928-282-7787

SHEET
C3.1
19 OF 99 SHEETS

JOB NO. 19-1101CE

1588

SEC, Inc., All Rights Reserved. This document is protected under the United States Copyright Act. No part may be reproduced in any form or by any means or stored in a database or retrieval system, without the prior written permission of SEC, Inc. These plans/documents have been prepared using technical knowledge that would be applied by other qualified registrants who practice the same profession in the same area and at the same time. Efforts have been made to be as accurate as possible. However, plans/documents could contain unintentional technical inaccuracies, typographical errors or omissions. Users of these plans/documents should understand that it is highly probable that errors and omissions will occur in any plan/document preparation process.

S:\LAND PROJECTS 2004 ENGINEERING\19-1101CE JEROME WWTP\DWG\C3D\PLANS\XBSAN-19-1101CE.DWG

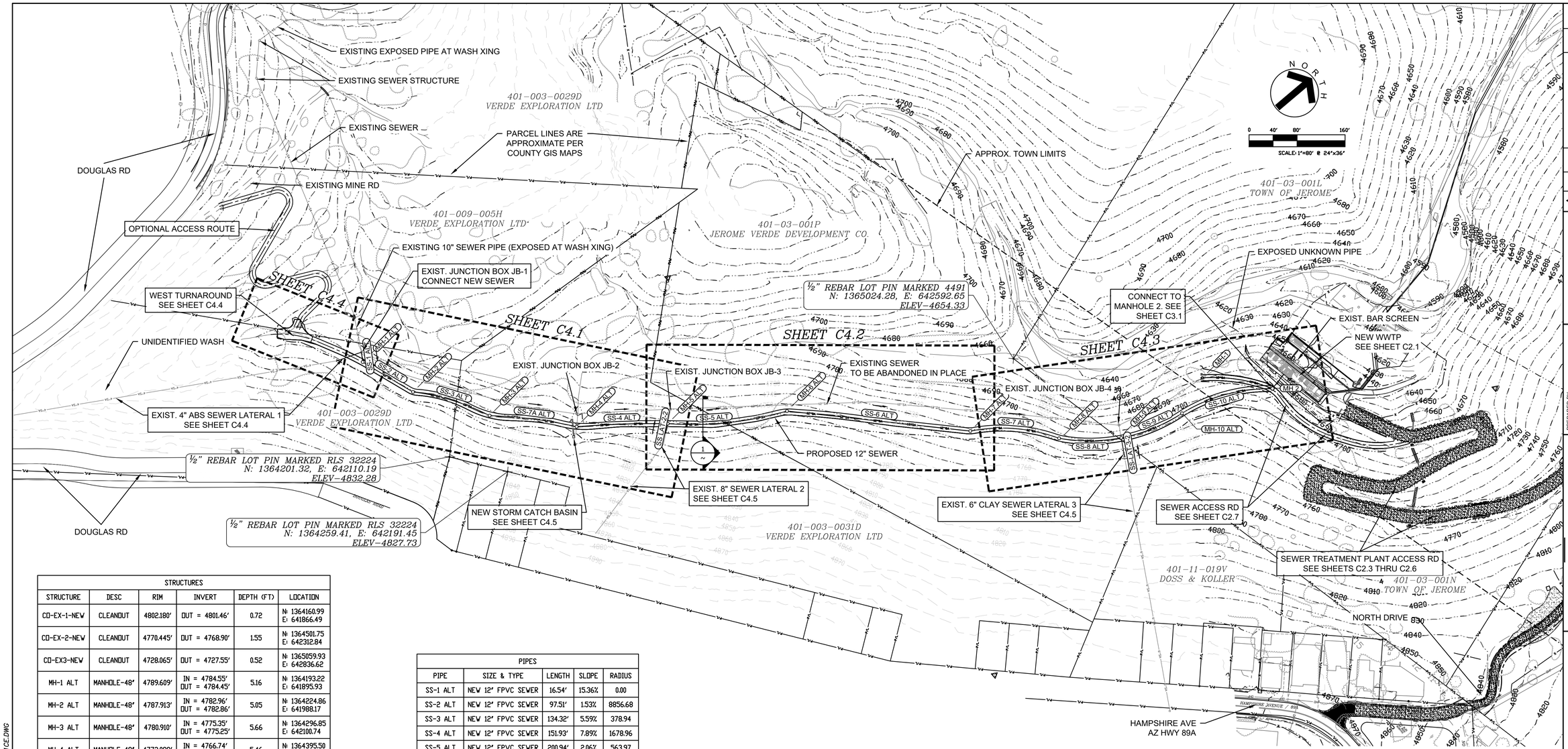

STRUCTURES					
STRUCTURE	DESC	RIM	INVERT	DEPTH (FT)	LOCATION
CO-EX-1-NEW	CLEANOUT	4802.180'	OUT = 4801.46'	0.72	N: 1364160.99 E: 641866.49
CO-EX-2-NEW	CLEANOUT	4770.445'	OUT = 4768.90'	1.55	N: 1364501.75 E: 642312.84
CO-EX3-NEW	CLEANOUT	4728.065'	OUT = 4727.55'	0.52	N: 1365059.93 E: 642836.62
MH-1 ALT	MANHOLE-48"	4789.609'	IN = 4784.55' OUT = 4784.45'	5.16	N: 1364193.22 E: 641895.93
MH-2 ALT	MANHOLE-48"	4787.913'	IN = 4782.96' OUT = 4782.86'	5.05	N: 1364224.86 E: 641988.17
MH-3 ALT	MANHOLE-48"	4780.910'	IN = 4775.35' OUT = 4775.25'	5.66	N: 1364296.85 E: 642100.74
MH-4 ALT	MANHOLE-48"	4772.099'	IN = 4766.74' OUT = 4766.64'	5.46	N: 1364395.50 E: 642208.64
MH-5 ALT	MANHOLE-48"	4759.803'	IN = 4754.64' IN = 4754.85' OUT = 4754.54'	5.26	N: 1364514.63 E: 642302.84
MH-6 ALT	MANHOLE-48"	4754.907'	IN = 4750.41' OUT = 4750.31'	4.59	N: 1364679.90 E: 642415.26
MH-7 ALT	MANHOLE-48"	4729.609'	IN = 4724.18' OUT = 4724.08'	5.53	N: 1364891.34 E: 642638.12
MH-8 ALT	MANHOLE-48"	4712.834'	IN = 4706.04' OUT = 4705.94'	6.89	N: 1364996.38 E: 642743.01
MH-9 ALT	MANHOLE-48"	4705.547'	IN = 4699.49' IN = 4700.39' OUT = 4699.39'	6.16	N: 1365075.93 E: 642809.37
MH-10 ALT	MANHOLE-48"	4704.172'	IN = 4699.06' OUT = 4698.96'	5.21	N: 1365179.64 E: 642843.49

PIPES				
PIPE	SIZE & TYPE	LENGTH	SLOPE	RADIUS
SS-1 ALT	NEW 12" FPVC SEWER	16.54'	15.36%	0.00
SS-2 ALT	NEW 12" FPVC SEWER	97.51'	1.53%	8856.68
SS-3 ALT	NEW 12" FPVC SEWER	134.32'	5.59%	378.94
SS-4 ALT	NEW 12" FPVC SEWER	151.93'	7.89%	1678.96
SS-5 ALT	NEW 12" FPVC SEWER	200.94'	2.06%	563.97
SS-6 ALT	NEW 12" FPVC SEWER	307.21'	8.51%	28124.53
SS-7 ALT	NEW 12" FPVC SEWER	150.27'	12.01%	277.65
SS-7A ALT	NEW 12" FPVC SEWER	146.41'	5.81%	779.23
SS-8 ALT	NEW 12" FPVC SEWER	104.13'	6.20%	296.23
SS-9 ALT	NEW 12" FPVC SEWER	109.85'	0.30%	286.54
SS-10 ALT	NEW 12" FPVC SEWER	155.46'	11.86%	278.54
SS-LAT-3-2	NEW 6' SEWER	27.25'	99.44%	0.00
SS-LAT 1-1	NEW 4' DIP SEWER	25.88'	1.00%	0.00
SS-LAT 1-2	NEW 4' SEWER	16.70'	80.70%	0.00
SS LAT-2-2	NEW 8' SEWER	12.60'	110.87%	0.00
SS LAT-3-1	NEW 6' SEWER	4.35'	1.77%	0.00
SS LAT 2-1	NEW 8' SEWER	3.71'	2.00%	0.00

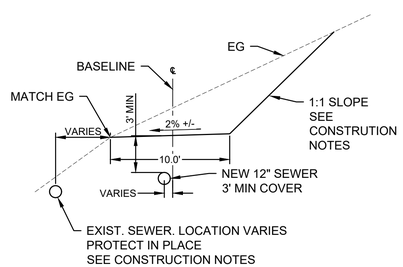

1 TYPICAL CONSTRUCTION ROAD SECTION
1"=6'

CONSTRUCTION NOTES
1. THE EXISTING SEWER IS VERY SHALLOW. EXTREME CAUTION IS REQUIRED TO ENSURE THE PIPE IS PROTECTED DURING CONSTRUCTION. EXISTING SEWER TO REMAIN OPERATIONAL AT ALL TIMES UNTIL THE NEW SEWER IS ACTIVATED.
2. THE EXISTING LATERAL SEWERS SHALL BE TEMPORARILY RE-ROUTED AS NEEDED DURING CONSTRUCTION. TO REMAIN OPERATIONAL UNTIL THE NEW SEWER IS ACTIVATED
3. WASTE MATERIAL FROM THE SEWER AND ROAD CONSTRUCTION SHALL BE REMOVED FROM PRIVATELY OWNED PROPERTIES.
4. CUT SLOPES STEEPER THAN 2:1 SHOULD BE EVALUATED AND APPROVED BY GEOTECHNICAL ENGINEER.
5. ALL TEMPORARY AND NEW SEWER PIPES AND STRUCTURES SHALL BE INSTALLED PER THE SPECIFICATIONS PROVIDED BY THE SEWER PLANT ENGINEER.
6. NEW EASEMENTS ARE NEEDED FOR BOTH EXISTING AND PROPOSED SEWER ACROSS PRIVATE PROPERTIES. TO BE COORDINATED BY THE TOWN.

EARTHWORK ESTIMATE (CUBIC YARDS)*			
	CUT	FILL	NET
SEWER ROAD	4,043	33	4010 CUT
*NO SHRINKAGE OR EXPANSION FACTORS APPLIED. EARTHWORK IS TO FINISHED GRADE. DEPTH TO SUBGRADE AND PIPE TRENCHING NOT ACCOUNTED FOR			

ESTIMATE OF SEWER QTY'S		
ITEM	QTY	UNITS
12" FPVC PIPE	1,568	LF
4" PVC SEWER	43	LF
6" PVC SEWER	32	LF
8" PVC SEWER	16	LF
48" MANHOLE	10	EA
CLEANOUT	3	EA

NO	BY	DATE	REVISIONS	DATE	APP

Registered Professional Engineer
CERTIFICATE NO. 49108
KRISHAN GEVINDA GINIGE
DATE SIGNED 10/31/25
ARIZONA, U.S.A.

PREPARED BY:
DESIGNED BY:
DRAWN BY: NMW
CHECKED BY: KG
SCALE: AS SHOWN
DATE 10/31/25
JOB NO. 19-1101CE

TITLE
JEROME WWTP
GRADING & UTILITIES PLANS
ALT SEWER SITE MAP, SURVEY CONTROL

JOB
YAVAPAI COUNTY AZ

PREPARED BY:
SOUTHWESTERN ENVIRONMENTAL CONSULTANTS, INC
825 COVE PARKWAY
COTTONWOOD, AZ 86326
928-282-7787

SHEET
C4.0
20 OF 99 SHEETS

JOB NO. 19-1101CE
1589

© SEC, Inc., All Rights Reserved. This document is protected under the United States Copyright Act. No part may be reproduced in any form or by any means or stored in a database or retrieval system, without the prior written permission of SEC, Inc. These plans/documents could contain unintentional technical inaccuracies, typographical errors or omissions. Users of these plans/documents should understand that it is highly probable that errors and omissions will occur in any plan/document preparation process. However, plans/documents could contain unintentional technical inaccuracies, typographical errors or omissions. Users of these plans/documents should understand that it is highly probable that errors and omissions will occur in any plan/document preparation process.

S:\LAND PROJECTS 2004 ENGINEERING\19-1101CE JEROME WWTP\DWG\C3D\PLANS\XBSAN-ALT-19-1101CE.DWG

SEE SHEET C4.4
WEST TURNROUND

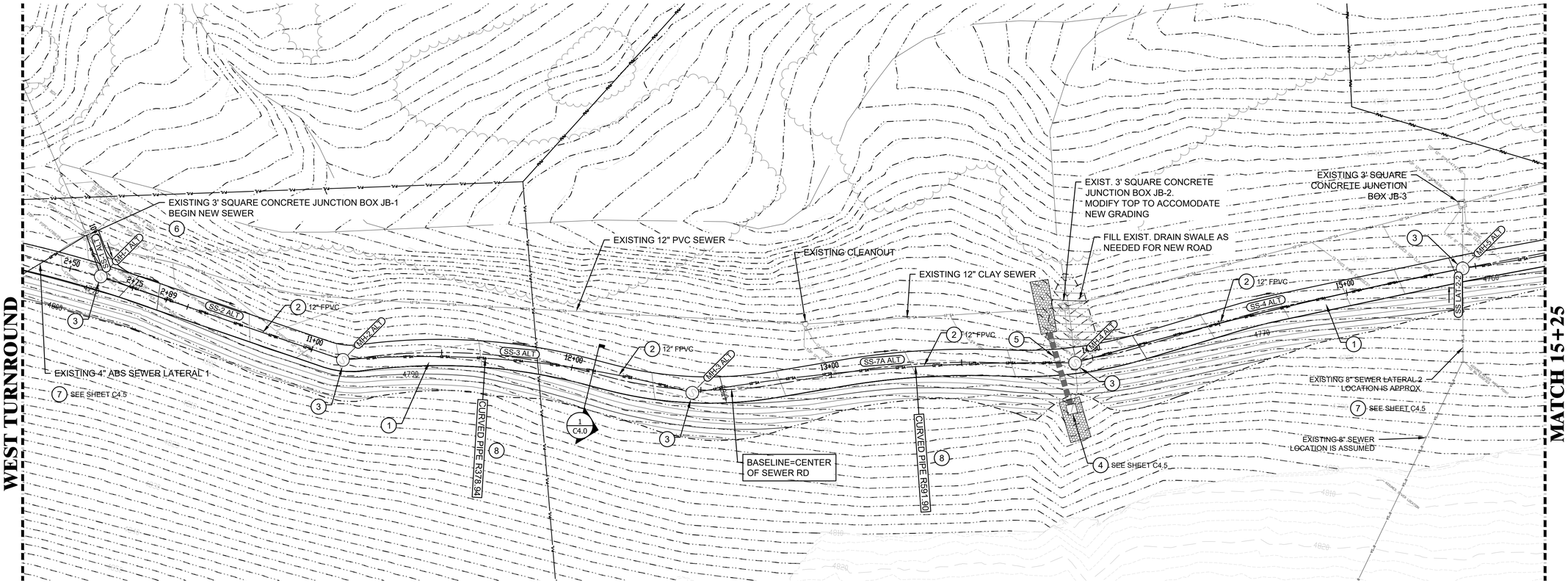

MATCH 15+25
SHEET C4.2

SEWER CALLOUTS. SEE CONSTRUCTION NOTES ON SHEET C4.0	
1	EXCAVATE SEWER CONSTRUCTION ROAD PER DETAIL 1, SHEET C4.0
2	INSTALL SEWER PIPE. SIZE AND TYPE PER PLAN. SEE NOTE 5, SHEET C4.0
3	INSTALL 48" SEWER MANHOLE PER MSD 420-1
4	INSTALL CATCH BASIN. SEE SHEET C4.5
5	INSTALL CULVERT. SEE SHEET C4.5
6	CONNECT NEW SEWER PIPE TO EXISTING JUNCTION BOX. CONTRACTOR TO PROVIDE DETAILS & SHOP DRAWINGS TO PROJECT ENGINEER FOR APPROVAL PRIOR TO CONNECTION.
7	PROTECT EXISTING SEWER LATERAL IN PLACE. CONNECT TO NEW SEWER WHEN ACTIVE. SEE PROFILES FOR DETAILS
8	INSTALL CURVED SEWER PIPE. RADIUS PER PLAN. SEE NOTE 5, SHEET C4.0.

CONSTRUCTION NOTES

1. THE EXISTING SEWER PIPES ARE VERY SHALLOW. EXTREME CAUTION IS REQUIRED TO ENSURE THE PIPES ARE PROTECTED DURING CONSTRUCTION. EXISTING SEWER TO REMAIN OPERATIONAL AT ALL TIMES UNTIL THE NEW SEWER IS ACTIVATED.
2. THE EXISTING LATERAL SEWERS SHALL BE TEMPORARILY RE-ROUTED AS NEEDED DURING CONSTRUCTION UNTIL THE NEW SEWER IS ACTIVATED.
3. WASTE MATERIAL FROM THE SEWER AND ROAD CONSTRUCTION SHALL BE REMOVED FROM PRIVATELY OWNED PROPERTIES.
4. CUT SLOPES STEEPER THAN 2:1 SHOULD BE EVALUATED AND APPROVED BY GEOTECHNICAL ENGINEER.
5. ALL TEMPORARY AND NEW SEWER PIPES AND STRUCTURES SHALL BE INSTALLED PER THE SPECIFICATIONS PROVIDED BY THE SEWER PLANT ENGINEER.
6. NEW EASEMENTS ARE NEEDED FOR BOTH EXISTING AND PROPOSED SEWER ACROSS PRIVATE LAND. TO BE COORDINATED BY THE TOWN.

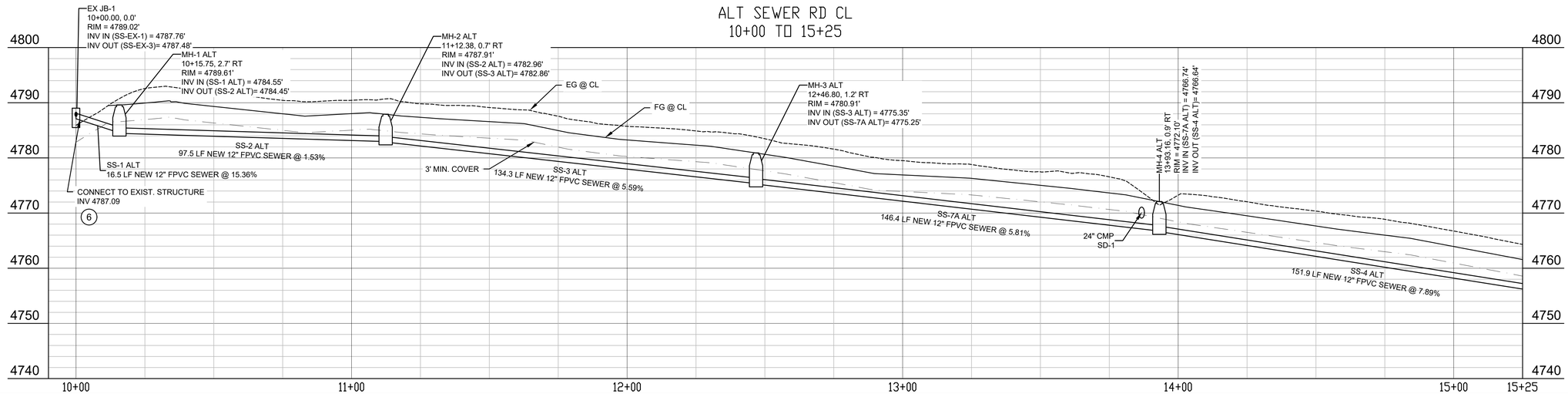

PREPARED BY:
SOUTHWESTERN ENVIRONMENTAL CONSULTANTS, INC
825 COVE PARKWAY
COTTONWOOD, AZ 86326
928-282-7787

NO	BY	DATE	REVISIONS	DATE	APP

PREPARED BY:
DESIGNED BY:
DRAWN BY: NMW
CHECKED BY: KG
DATE 10/31/25
SCALE: AS SHOWN
JOB NO. 19-1101CE

TITLE
ALT SEWER P&P 10+00 TO 15+25

JOB
JEROME WWTP
GRADING & UTILITIES PLANS
YAVAPAI COUNTY AZ

SHEET
C4.1
21 OF 99 SHEETS

JOB NO. 19-1101CE
1590

© SEC, Inc. All Rights Reserved. This document is protected under the United States Copyright Act. No part may be reproduced in any form or by any means or stored in a database or retrieval system, without the prior written permission of SEC, Inc. These plans/documents could contain unintentional technical inaccuracies, typographical errors or omissions. Users of these plans/documents should understand that it is highly probable that errors and omissions will occur in any plan/document preparation process. However, plans/documents could contain unintentional technical inaccuracies, typographical errors or omissions. Users of these plans/documents should understand that it is highly probable that errors and omissions will occur in any plan/document preparation process.

S:\LAND PROJECTS 2004 ENGINEERING\19-1101CE JEROME WWTP\DWG\C3D\PLANS\XBSAN-ALT-19-1101CE.DWG

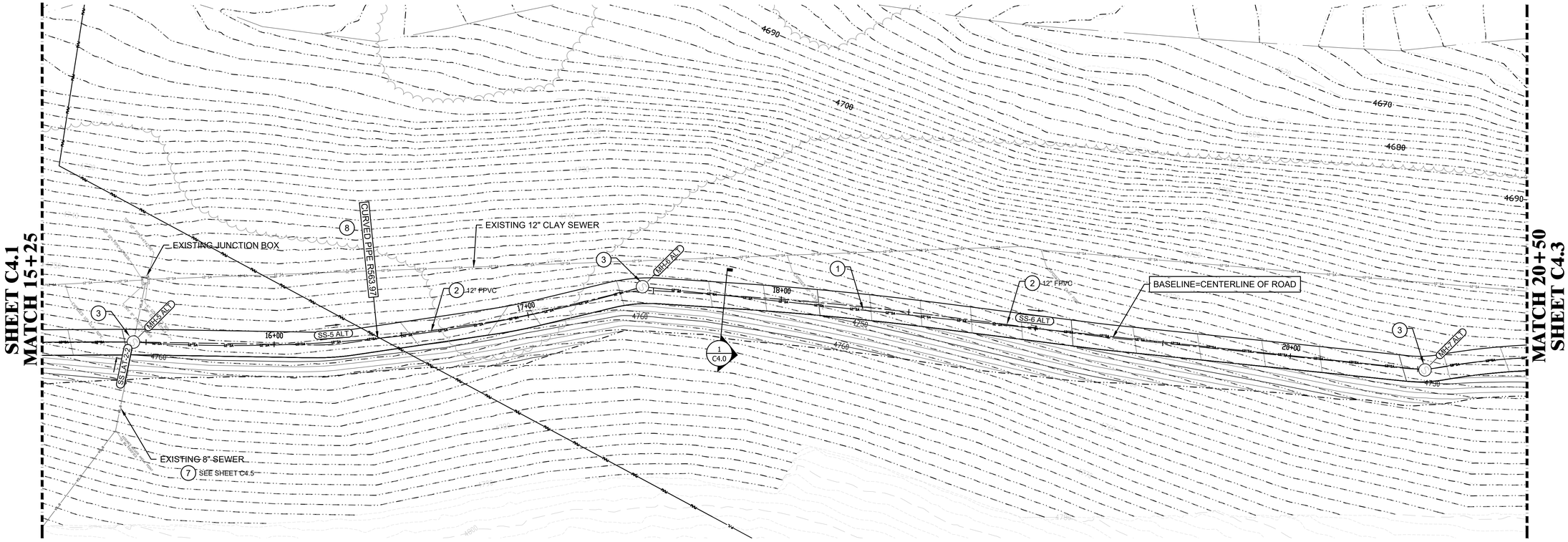

SEWER CALLOUTS. SEE CONSTRUCTION NOTES ON SHEET C4.0	
1	EXCAVATE SEWER CONSTRUCTION ROAD PER DETAIL 1, SHEET C4.0
2	INSTALL SEWER PIPE. SIZE AND TYPE PER PLAN. SEE NOTE 5, SHEET C4.0
3	INSTALL 48" SEWER MANHOLE PER MSD 420-1
4	INSTALL CATCH BASIN. SEE SHEET C4.5
5	INSTALL CULVERT. SEE SHEET C4.5
6	CONNECT NEW SEWER PIPE TO EXISTING JUNCTION BOX. CONTRACTOR TO PROVIDE DETAILS & SHOP DRAWINGS TO PROJECT ENGINEER FOR APPROVAL PRIOR TO CONNECTION.
7	PROTECT EXISTING SEWER LATERAL IN PLACE. CONNECT TO NEW SEWER WHEN ACTIVE. SEE PROFILES FOR DETAILS
8	INSTALL CURVED SEWER PIPE. RADIUS PER PLAN. SEE NOTE 5, SHEET C4.0.

CONSTRUCTION NOTES

1. THE EXISTING SEWER PIPES ARE VERY SHALLOW. EXTREME CAUTION IS REQUIRED TO ENSURE THE PIPES ARE PROTECTED DURING CONSTRUCTION. EXISTING SEWER TO REMAIN OPERATIONAL AT ALL TIMES UNTIL THE NEW SEWER IS ACTIVATED.
2. THE EXISTING LATERAL SEWERS SHALL BE TEMPORARILY RE-ROUTED AS NEEDED DURING CONSTRUCTION UNTIL THE NEW SEWER IS ACTIVATED.
3. WASTE MATERIAL FROM THE SEWER AND ROAD CONSTRUCTION SHALL BE REMOVED FROM PRIVATELY OWNED PROPERTIES.
4. CUT SLOPES STEEPER THAN 2:1 SHOULD BE EVALUATED AND APPROVED BY GEOTECHNICAL ENGINEER.
5. ALL TEMPORARY AND NEW SEWER PIPES AND STRUCTURES SHALL BE INSTALLED PER THE SPECIFICATIONS PROVIDED BY THE SEWER PLANT ENGINEER.
6. NEW EASEMENTS ARE NEEDED FOR BOTH EXISTING AND PROPOSED SEWER ACROSS PRIVATE LAND. TO BE COORDINATED BY THE TOWN.

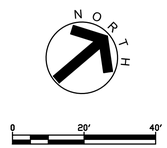

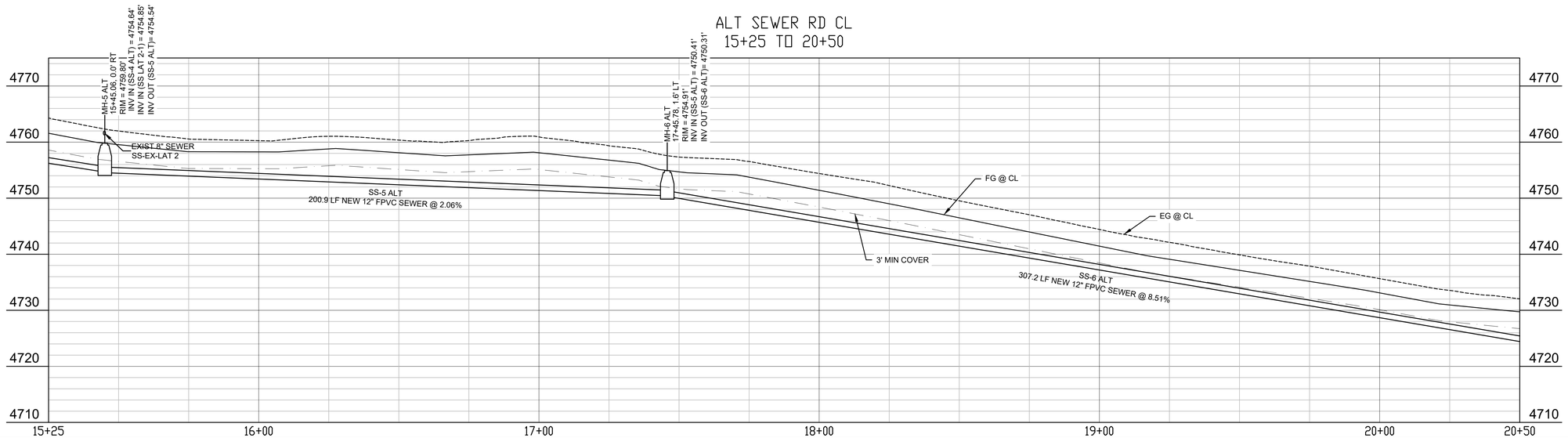

NO	BY	DATE	REVISIONS	DATE	APP

PREPARED BY:
DESIGNED BY:
DRAWN BY: NMW
CHECKED BY: KG
DATE 10/31/25
SCALE: AS SHOWN
JOB NO. 19-1101CE

TITLE
ALT SEWER P&P 15+25 TO 20+50

JOB
JEROME WWTP
GRADING & UTILITIES PLANS
YAVAPAI COUNTY AZ

PREPARED BY:
SOUTHWESTERN ENVIRONMENTAL CONSULTANTS, INC
825 COVE PARKWAY
COTTONWOOD, AZ 86326
928-282-7787

SHEET
C4.2
22 OF 99 SHEETS

JOB NO. 19-1101CE
1591

Professional Engineer
CERTIFICATE NO.
49108
KRISHAN GEVINDA GINIGE
10/31/25
DATE SIGNED
ARIZONA, U.S.A.

© SEC, Inc., All Rights Reserved. This document is protected under the United States Copyright Act. No part may be reproduced in any form or by any means or stored in a database or retrieval system, without the prior written permission of SEC, Inc. These plans/documents have been prepared using technical knowledge that would be applied by other qualified registrants who practice the same profession in the same area and at the same time. Efforts have been made to be as accurate as possible. However, plans/documents could contain unintentional technical inaccuracies, typographical errors or omissions. Users of these plans/documents should understand that it is highly probable that errors and omissions will occur in any plan/document preparation process.

S:\LAND PROJECTS 2004 ENGINEERING\19-1101CE JEROME WWTP\DWG\C3D\PLANS\XBSAN-ALT-19-1101CE.DWG

SHEET C4.2
MATCH 20+50

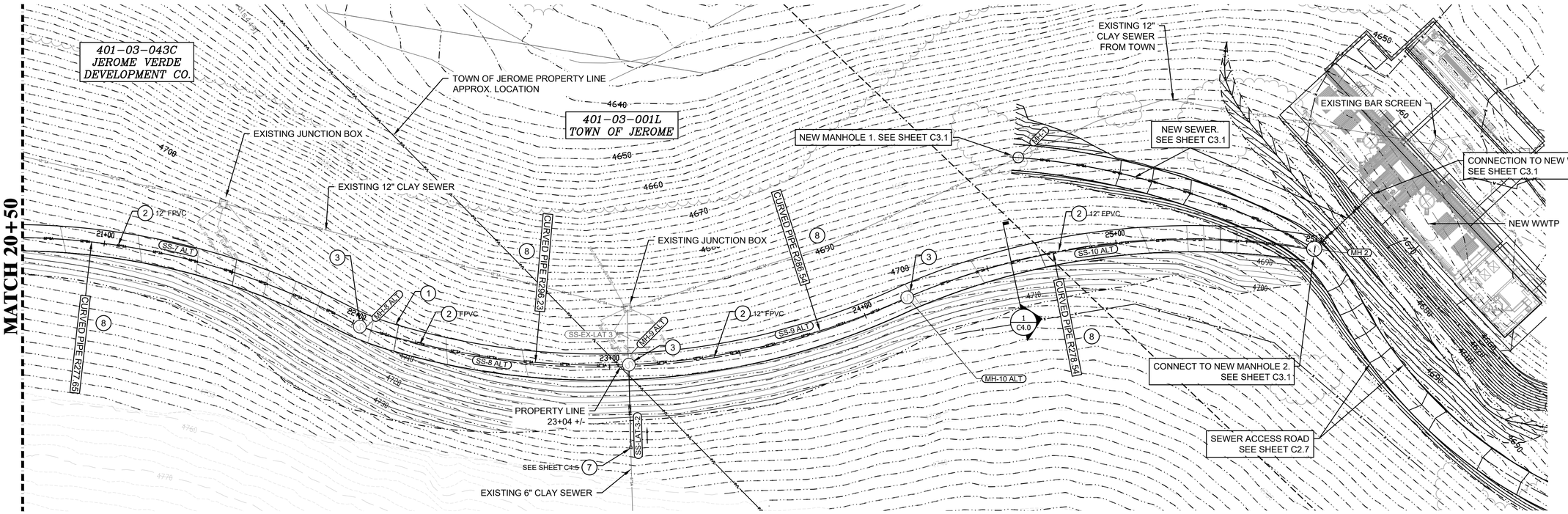

SEWER CALLOUTS. SEE CONSTRUCTION NOTES ON SHEET C4.0	
1	EXCAVATE SEWER CONSTRUCTION ROAD PER DETAIL 1, SHEET C4.0
2	INSTALL SEWER PIPE. SIZE AND TYPE PER PLAN. SEE NOTE 5, SHEET C4.0
3	INSTALL 48" SEWER MANHOLE PER MSD 420-1
4	INSTALL CATCH BASIN. SEE SHEET C4.5
5	INSTALL CULVERT. SEE SHEET C4.5
6	CONNECT NEW SEWER PIPE TO EXISTING JUNCTION BOX. CONTRACTOR TO PROVIDE DETAILS & SHOP DRAWINGS TO PROJECT ENGINEER FOR APPROVAL PRIOR TO CONNECTION.
7	PROTECT EXISTING SEWER LATERAL IN PLACE. CONNECT TO NEW SEWER WHEN ACTIVE. SEE PROFILES FOR DETAILS
8	INSTALL CURVED SEWER PIPE. RADIUS PER PLAN. SEE NOTE 5, SHEET C4.0.

CONSTRUCTION NOTES

1. THE EXISTING SEWER PIPES ARE VERY SHALLOW. EXTREME CAUTION IS REQUIRED TO ENSURE THE PIPES ARE PROTECTED DURING CONSTRUCTION. EXISTING SEWER TO REMAIN OPERATIONAL AT ALL TIMES UNTIL THE NEW SEWER IS ACTIVATED.
2. THE EXISTING LATERAL SEWERS SHALL BE TEMPORARILY RE-ROUTED AS NEEDED DURING CONSTRUCTION UNTIL THE NEW SEWER IS ACTIVATED.
3. WASTE MATERIAL FROM THE SEWER AND ROAD CONSTRUCTION SHALL BE REMOVED FROM PRIVATELY OWNED PROPERTIES.
4. CUT SLOPES STEEPER THAN 2:1 SHOULD BE EVALUATED AND APPROVED BY GEOTECHNICAL ENGINEER.
5. ALL TEMPORARY AND NEW SEWER PIPES AND STRUCTURES SHALL BE INSTALLED PER THE SPECIFICATIONS PROVIDED BY THE SEWER PLANT ENGINEER.
6. NEW EASEMENTS ARE NEEDED FOR BOTH EXISTING AND PROPOSED SEWER ACROSS PRIVATE LAND. TO BE COORDINATED BY THE TOWN.

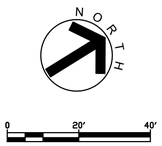

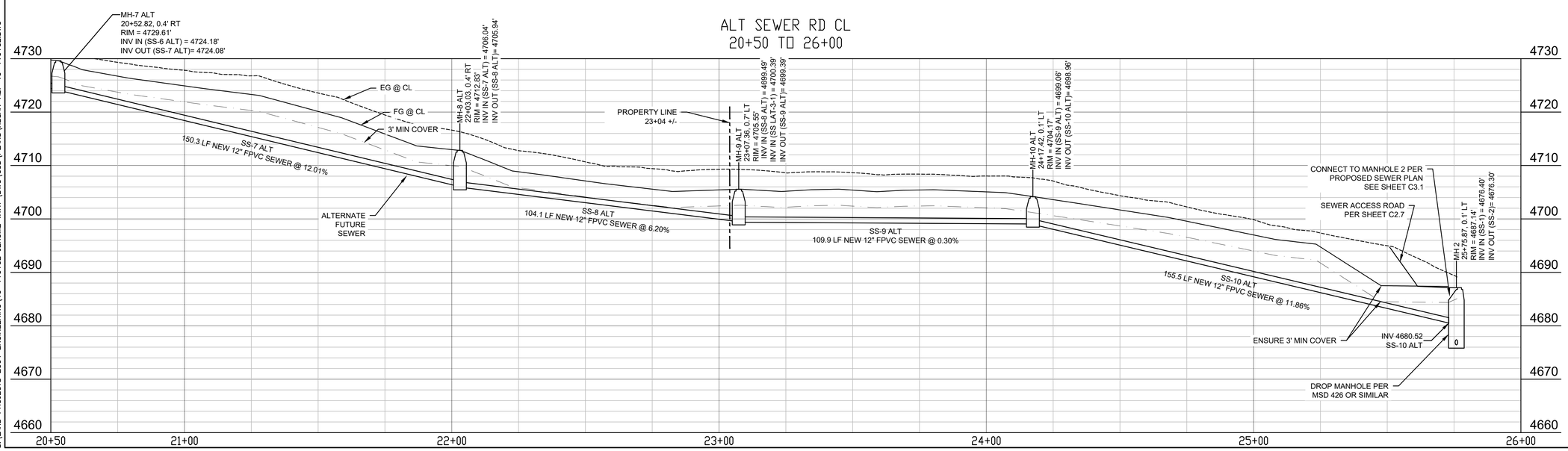

S:\LAND PROJECTS 2004 ENGINEERING\19-1101CE JEROME WWTP\DWG\C3D\PLANS\XBSAN-ALT-19-1101CE.DWG

NO	BY	DATE	REVISIONS	DATE	APP

Professional Engineer
49108
KRISHAN GEVINDA GINIGE
10/31/25
REGISTERED
ARIZONA, U.S.A.

PREPARED BY:
DESIGNED BY:
DRAWN BY: NMW
CHECKED BY: KG
SCALE: AS SHOWN
DATE 10/31/25
JOB NO. 19-1101CE

TITLE
ALT SEWER P&P 20+50 TO 26+00

JOB
JEROME WWTP
GRADING & UTILITIES PLANS
YAVAPAI COUNTY AZ

PREPARED BY:
SOUTHWESTERN ENVIRONMENTAL CONSULTANTS, INC
825 COVE PARKWAY
COTTONWOOD, AZ 86326
928-282-7787

SHEET
C4.3
23 OF 99 SHEETS

JOB NO. 19-1101CE
1592

These plans have been prepared using technical knowledge that would be applied by other qualified registrants who practice the same profession in the same area and at the same time. Efforts have been made to be as accurate as possible. However, plans/documents could contain unintentional technical inaccuracies, typographical errors or omissions. Users of these plans/documents should understand that it is highly probable that errors and omissions will occur in any plan/document preparation process.

SEC, Inc., All Rights Reserved. This document is protected under the United States Copyright Act. No part may be reproduced in any form or by any means or stored in a database or retrieval system, without the prior written permission of SEC, Inc.

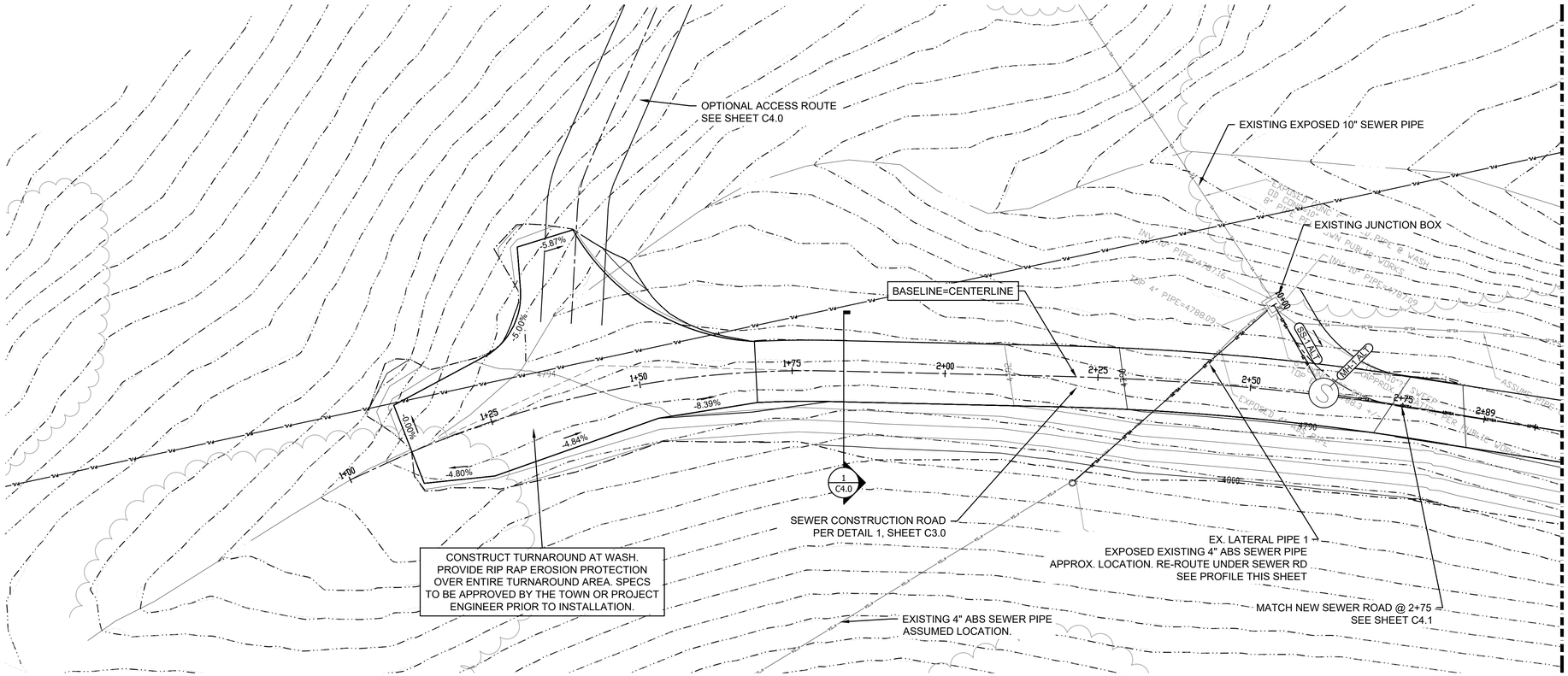

TURNAROUND
WEST TURNAROUND @ CENTERLINE

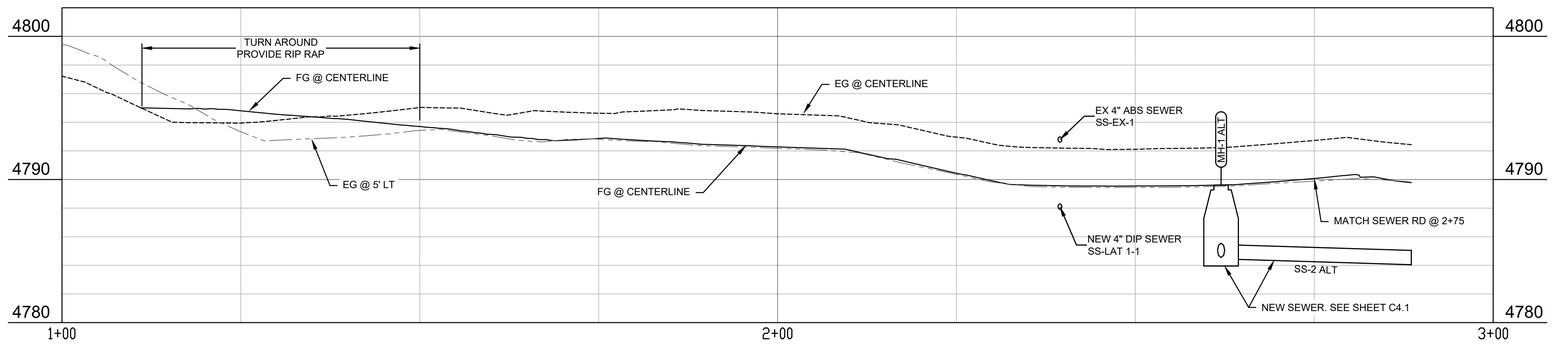

EX LATERAL PIPE 1
PROFILE VIEW (0+44.35)

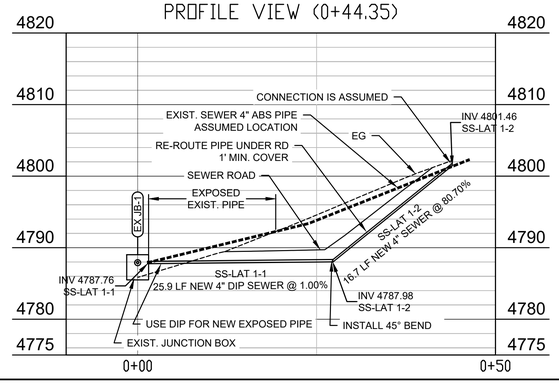

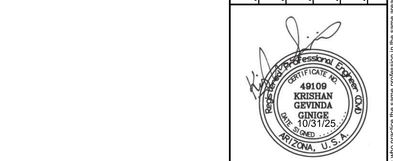

NO	BY	DATE	REVISIONS	DATE	APP

PREPARED BY:
DESIGNED BY:
DRAWN BY: NMW
CHECKED BY: KG
DATE: 10/31/25
SCALE: AS SHOWN
JOB NO. 19-1101CE

TITLE: ALT SEWER WEST TURNAROUND

JOB: JEROME WWTP GRADING & UTILITIES PLANS — YAVAPAI COUNTY AZ

PREPARED BY:
SOUTHWESTERN ENVIRONMENTAL CONSULTANTS, INC
825 COVE PARKWAY
COTTONWOOD, AZ 86326
928-282-7787

SHEET
C4.4
24 OF 99 SHEETS

JOB NO. 19-1101CE
1593

© SEC, Inc. All Rights Reserved. This document is protected under the United States Copyright Act. No part may be reproduced in any form or by any means or stored in a database or retrieval system, without the prior written permission of SEC, Inc. These plans/documents have been prepared using technical knowledge that would be applied by other qualified registrants who practice the same profession in the same area and at the same time. Efforts have been made to be as accurate as possible. However, plans/documents could contain unintentional technical inaccuracies, typographical errors or omissions. Users of these plans/documents should understand that it is highly probable that errors and omissions will occur in any plan/document preparation process.

S:\LAND PROJECTS 2004 ENGINEERING\19-1101CE JEROME WWTP\DWG\C3D\PLANS\XBSAN-ALT-19-1101CE.DWG

Item I.



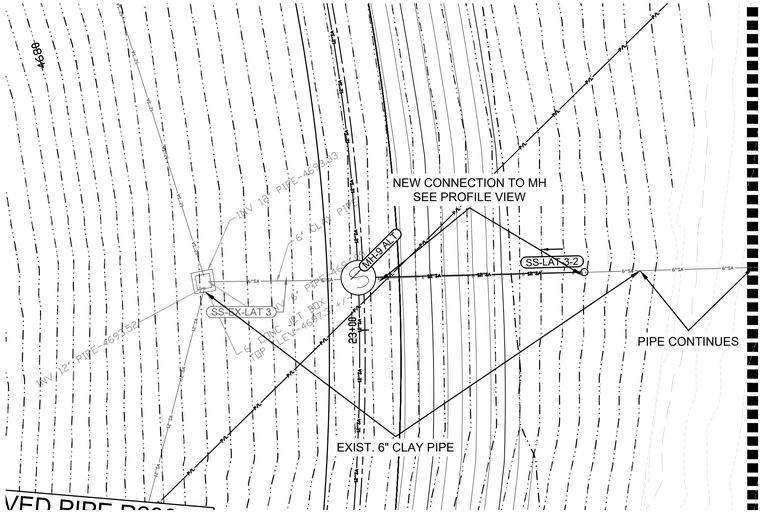



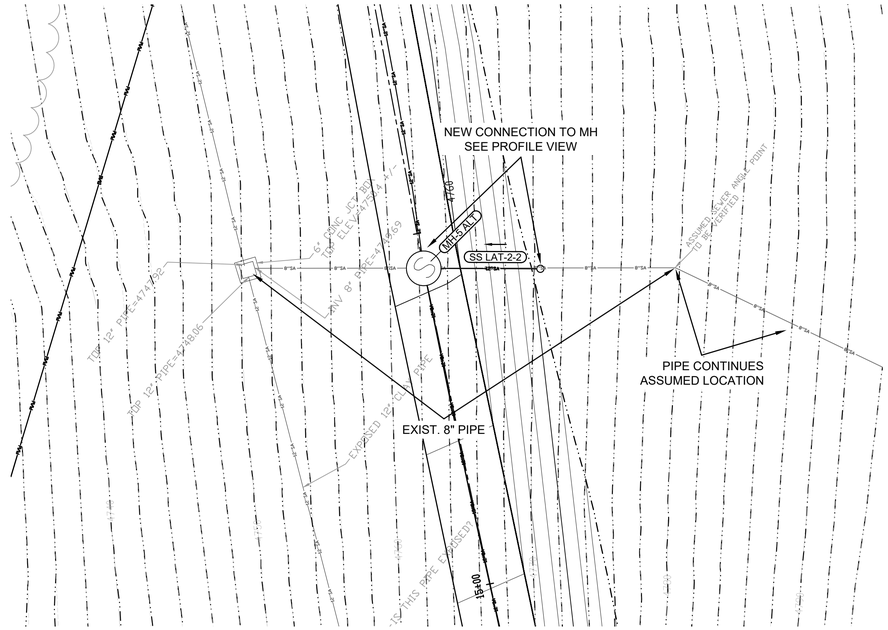

EXIST SEW LAT 3
0+00 TO 0+70

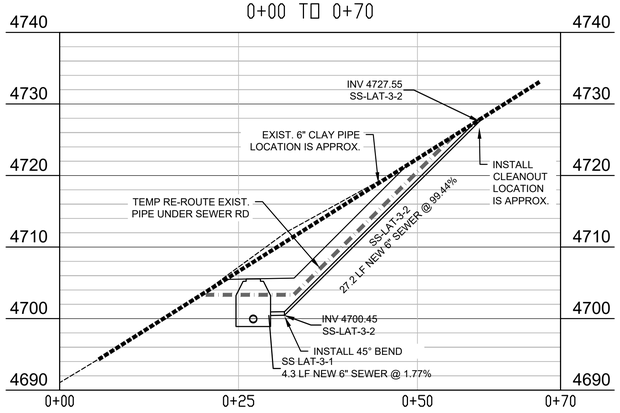

EX SEW LAT 2
0+00 TO 0+75



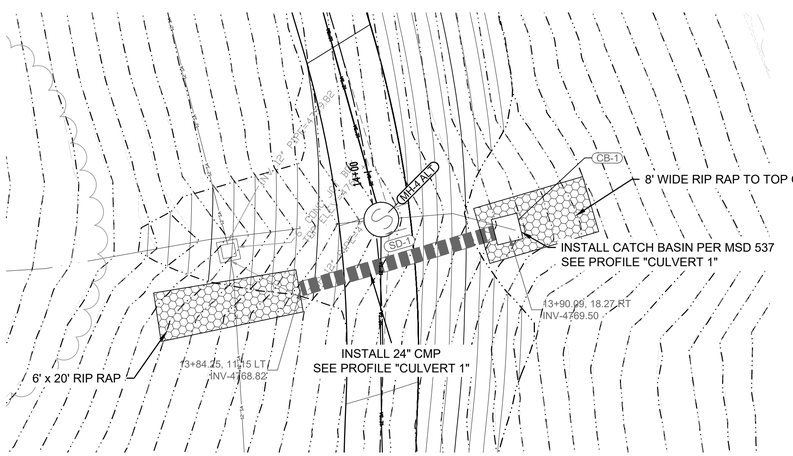

CULVERT 1
0+00 TO 0+75

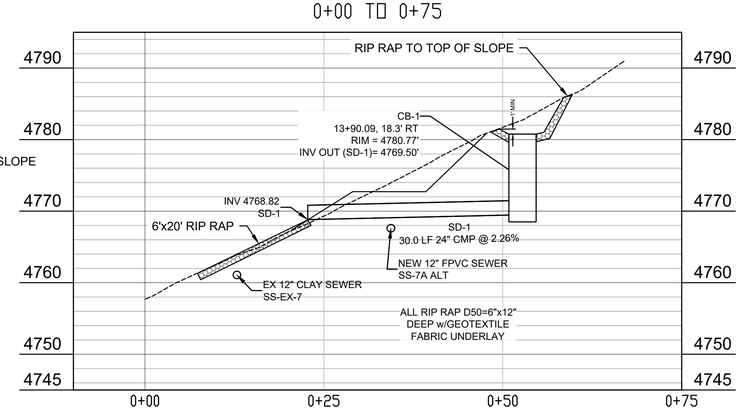

CONSTRUCTION NOTES

1. THE EXISTING SEWER PIPES ARE VERY SHALLOW. EXTREME CAUTION IS REQUIRED TO ENSURE THE PIPES ARE PROTECTED DURING CONSTRUCTION. EXISTING SEWER TO REMAIN OPERATIONAL AT ALL TIMES UNTIL THE NEW SEWER IS ACTIVATED.
2. THE EXISTING LATERAL SEWERS SHALL BE TEMPORARILY RE-ROUTED AS NEEDED DURING CONSTRUCTION UNTIL THE NEW SEWER IS ACTIVATED.
3. WASTE MATERIAL FROM THE SEWER AND ROAD CONSTRUCTION SHALL BE REMOVED FROM PRIVATELY OWNED PROPERTIES.
4. CUT SLOPES STEEPER THAN 2:1 SHOULD BE EVALUATED AND APPROVED BY GEOTECHNICAL ENGINEER.
5. ALL TEMPORARY AND NEW SEWER PIPES AND STRUCTURES SHALL BE INSTALLED PER THE SPECIFICATIONS PROVIDED BY THE SEWER PLANT ENGINEER.
6. NEW EASEMENTS ARE NEEDED FOR BOTH EXISTING AND PROPOSED SEWER ACROSS PRIVATE LAND. TO BE COORDINATED BY THE TOWN.

Item I.

NO	BY	DATE	REVISIONS	DATE	APP

Professional Engineer
CERTIFICATE NO.
49108
KRISHAN GEVINDA GINIGE
10/31/25
DATE SIGNED
ARIZONA, U.S.A.

PREPARED BY:
DESIGNED BY:
DRAWN BY: NMW
CHECKED BY: KG
DATE: 10/31/25
SCALE: AS SHOWN
JOB NO. 19-1101CE

TITLE
ALT SEWER LATERAL PROFILES

JOB
JEROME WWTP
GRADING & UTILITIES PLANS
YAVAPAI COUNTY AZ

PREPARED BY:
SEC Inc.
SOUTHWESTERN ENVIRONMENTAL CONSULTANTS, INC
825 COVE PARKWAY
COTTONWOOD, AZ 86326
928-282-7787

SHEET
C4.5
25 OF 99 SHEETS

JOB NO. 19-1101CE
1594

These plans/documents have been prepared using technical knowledge that would be applied by other qualified registrants who practice the same profession in the same area and at the same time. Efforts have been made to be as accurate as possible. However, plans/documents could contain unintentional technical inaccuracies, typographical errors or omissions. Users of these plans/documents should understand that it is highly probable that errors and omissions will occur in any plan/document preparation process.

SEC, Inc., All Rights Reserved. This document is protected under the United States Copyright Act. No part may be reproduced in any form or by any means or stored in a database or retrieval system, without the prior written permission of SEC, Inc.

S:\LAND PROJECTS 2004 ENGINEERING\19-1101CE JEROME WWTP\DWG\C3D\PLANS\XBSAN-ALT-19-1101CE.DWG



EXISTING EQUIPMENT AND COMPONENTS

1. BAR SCREEN
2. 2" PVC POTABLE WATERLINE
3. STORAGE TANKS (ABANDONED)
4. PRIMARY SETTLING TANK
5. DOSING TANK A
6. TRICKLING FILTER (TYP.)
7. REED BEDS (TYP.)
8. DOSING TANK B
9. CONSTRUCTED WETLAND CELLS (TYP.)
10. LEVEL ADJUST SUMP (TYP.)
11. CHLORINE CONTACT CHAMBERS

EXISTING SITE PLAN

NORTH

40 20 0 40 80

NO	BY	DATE	REVISIONS	DATE	APP.

THESE DRAWINGS ARE THE PROPERTY OF P.A.C.E. AND SHALL NOT BE REPRODUCED IN ANY MANNER NOR BE USED FOR CONSTRUCTION UNLESS STAMPED 'ISSUED FOR CONSTRUCTION'.

Registered Professional Engineer (Civil) CERTIFICATE NO. 70097 TAYLOR B. PIERCE Signed ARIZONA, U.S.A. Expires 12/31/28

PREPARED BY: PACE
DESIGNED BY: NE
DRAWN BY: DS, WW
CHECKED BY: TP
SCALE: AS NOTED
DATE: NOV 2025
JOB NO. B614

TITLE: EXISTING SITE PLAN

JOB: TOWN OF JEROME WASTEWATER TREATMENT PLANT
YAVAPAI CO. AZ

100% ISSUED FOR BID

PREPARED BY:
PACE
Advanced Water Engineering
8723 E. VIA DE VENTURA, SUITE A-200, SCOTTSDALE, CA 85258
P: (480) 991-3955 | www.pacewater.com
TAYLOR B. PIERCE R.C.E. 70097 DATE

SHEET
M1.0
26 OF 99 SHEETS

JOB NO. B614

W:\B614\Engineering\B614-30sheets\B614- M1.0 EXISTING SITE PLAN.dwg - Tab: SITE PLAN - by reddington on 03/10/26 at 2:04:43 PM



CONSTRUCTION NOTES:

1. INSTALL TEMPORARY 12" BYPASS FOR THE EXISTING SEWER INFLUENT LINE.
2. REMOVE EXISTING BAR SCREEN AND RELOCATE UPSTREAM OF THE EXISTING PRIMARY SETTLING TANK.
3. INSTALL TEMPORARY BAR SCREEN AND 12" SEWER BYPASS LINE TO THE PRIMARY SETTLING TANK.
4. DEMOLISH AND REMOVE THE EXISTING TANK SAND FILTER, TANK CLARIFIER, STORAGE BUILDING, AND STATIC SCREEN.
5. CUT AND CAP EXISTING 2" WATER SERVICE TO THE WWTP.
6. DEMOLISH AND REMOVE THE EXISTING STORAGE SHED.
7. CUT AND CAP PIPE FROM THE PRIMARY SETTLING TANK TO THE EAST REED BED.
8. CUT AND CAP LINE FROM DOSING TANK A TO EAST TRICKLING FILTER.
9. LOCATE, CUT AND CAP LINE FROM SAND FILTER TANK.
10. CUT, CAP AND PROTECT IN PLACE EAST TRICKLING FILTER.
11. CUT AND CAP DRAIN LINE FROM EAST TRICKLING FILTER UPSTREAM OF WEST TRICKLING FILTER LINE TIE-IN LOCATION.
12. REMOVE ALL EXISTING PIPING WITHIN THE EAST REED BED.
13. CUT AND CAP EAST REED BED DRAIN LINE AT THE EXISTING MANHOLE.
14. PROTECT IN PLACE.
15. REMOVE APPROX. 140 LF OF EXISTING FENCE.

NOTES:
1. CONTRACTOR TO PROVIDE A SEQUENCE OF CONSTRUCTION TO ENGINEER FOR REVIEW PRIOR TO CONSTRUCTION. CONTRACTOR SHALL BE RESPONSIBLE FOR ALL MEANS AND METHODS.

DEMOLITION PLAN PH-I

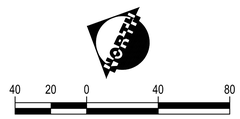

NO	BY	DATE	REVISIONS	DATE	APP.

THESE DRAWINGS ARE THE PROPERTY OF P.A.C.E. AND SHALL NOT BE REPRODUCED IN ANY MANNER NOR BE USED FOR CONSTRUCTION UNLESS STAMPED 'ISSUED FOR CONSTRUCTION'.

Registered Professional Engineer (Civil) CERTIFICATE NO. 70097 Taylor B. Pierce Signed ARIZONA, U.S.A. Expires 12/31/28

PREPARED BY:	PACE
DESIGNED BY:	NE
DRAWN BY:	DS, WW
CHECKED BY:	TP
SCALE:	AS NOTED
DATE	NOV 2025
JOB NO.	B614

TITLE: **DEMOLITION PLAN PH-I**

JOB: TOWN OF JEROME
WASTEWATER
TREATMENT PLANT
YAVAPAI CO. AZ

100% ISSUED FOR BID

PREPARED BY: TAYLOR B. PIERCE R.C.E 70097 DATE

PACE
Advanced Water Engineering
8723 E. Via de Commercio, Suite 2-114 Scottsdale, CA 85258
P. (408) 991-3395 | www.pacewater.com

SHEET
M1.1
27 OF 99 SHEETS

JOB NO. B614

W:\B614\Engineering\B614-30\sheets\B614 - M1.1 DEMO PLANS PH-I.dwg - Tab: M1.1 - by reddington on 11/17/25 at 10:25:59 AM



CONSTRUCTION NOTES:

1. REMOVE TEMPORARY BYPASS PIPING FROM THE INFLUENT LINE ONCE FLOW HAS BEEN DIVERTED THROUGH NEW WWTP.
2. DEMOLISH AND REMOVE EXISTING PRIMARY SETTLING TANK. REMOVE ALL ABOVE GRADE PIPING & CAP AND ABANDON IN PLACE ALL BELOW GRADE PIPING.
3. DEMOLISH AND REMOVE EXISTING DOSING TANK A. REMOVE ALL ABOVE GRADE PIPING & CAP AND ABANDON IN PLACE ALL BELOW GRADE PIPING.
4. REMOVE ALL ABOVE GRADE PIPING & CAP AND ABANDON IN PLACE ALL BELOW GRADE PIPING. ABANDON IN PLACE WEST TRICKLING FILTER.
5. CAP AND ABANDON IN PLACE EXISTING SEPTIC TANK. REMOVE ALL ABOVE GRADE PIPING & CAP AND ABANDON IN PLACE ALL BELOW GRADE PIPING.
6. ABANDON IN PLACE EXISTING WEST REED BED. REMOVE ALL ABOVE GRADE PIPING & CAP AND ABANDON IN PLACE ALL BELOW GRADE PIPING.
7. CAP AND ABANDON IN PLACE EXISTING MANHOLE. CUT AND CAP ALL PIPING BELOW GRADE AND ABANDON IN PLACE.
8. CAP AND ABANDON IN PLACE EXISTING DOSING TANK B. REMOVE ALL ABOVE GRADE PIPING & CAP AND ABANDON IN PLACE ALL BELOW GRADE PIPING.
9. ABANDON IN PLACE EXISTING WEST WETLAND CELL. REMOVE ALL ABOVE GRADE PIPING & CAP AND ABANDON IN PLACE ALL BELOW GRADE PIPING. REUSE TRAFFIC BARRIER FOR NEW OVERFLOW BASIN.
10. REMOVE ALL PIPING WITHIN THE THREE EAST WETLAND BASINS & CUT, CAP, AND ABANDON IN PLACE ALL PIPING OUTSIDE THE BASINS.
11. CAP AND ABANDON IN PLACE EAST LEVEL ADJUST SUMPS. CUT, CAP AND ABANDON IN PLACE ALL BELOW GRADE PIPING.
12. CAP AND ABANDON IN PLACE WEST LEVEL ADJUST SUMP. CUT, CAP AND ABANDON IN PLACE ALL BELOW GRADE PIPING.
13. CAP AND ABANDON IN PLACE EXISTING CHLORINE CONTACT CHAMBER. CUT, CAP AND ABANDON IN PLACE ALL BELOW GRADE PIPING.

DEMOLITION PLAN PH-II

NORTH

40 20 0 40 80

NO	BY	DATE	REVISIONS	DATE	APP.

THESE DRAWINGS ARE THE PROPERTY OF P.A.C.E. AND SHALL NOT BE REPRODUCED IN ANY MANNER NOR BE USED FOR CONSTRUCTION UNLESS STAMPED 'ISSUED FOR CONSTRUCTION'.

Registered Professional Engineer (Civil) CERTIFICATE NO. 70097 TAYLOR B. PIERCE Signed ARIZONA, U.S.A. Expires 12/31/28

PREPARED BY: PACE
DESIGNED BY: NE
DRAWN BY: DS, WW
CHECKED BY: TP
SCALE: AS NOTED
DATE: NOV 2025
JOB NO.: B614

TITLE: DEMOLITION PLAN PH-II

JOB: TOWN OF JEROME WASTEWATER TREATMENT PLANT — YAVAPAI CO. AZ

100% ISSUED FOR BID

PREPARED BY: TAYLOR B. PIERCE R.C.E 70097 DATE

PACE
Advanced Water Engineering
8723 E. VIA DE COMMERCIO, 3RD FLOOR, SCOTTSDALE, CA 85258
P.: (480) 991-3595 || www.pacewater.com

SHEET
M1.2
28 OF 99 SHEETS

JOB NO. B614

W:\B614\Engineering\B614-30sheets\B614 - M1.2 DEMO PLANS PHII.dwg - Tab: M1.2 - by reddington on 03/10/26 at 12:57:22 PM

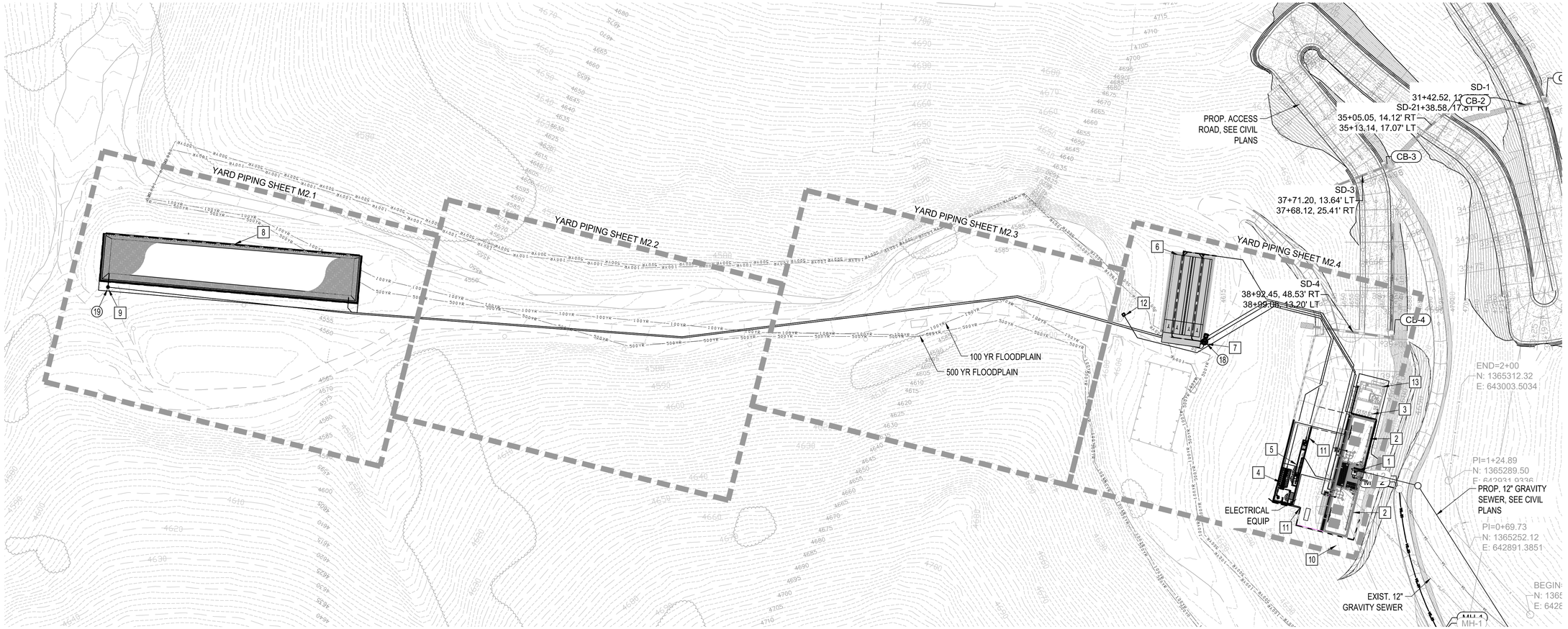

CONSTRUCTION NOTES:

1. HEADWORKS PER SHEET M3.0.
2. SEQUENCING BATCH REACTOR PER SHEET M3.0.
3. BLOWER ROOM PER SHEET M7.0.
4. DEWATERING PAD PER SHEET M5.3.
5. CHLORINE CONTACT CHANNEL PER SHEET M4.0.
6. SLUDGE DRYING BED PER SHEET M5.0.
7. DRYING BED LIFT STATION PER SHEET M5.2.
8. EMERGENCY OVERFLOW BASIN PER SHEET M6.0.
9. PACKAGED OVERFLOW LIFT STATION PER DETAIL A SHEET M8.2.
10. REPLACE 140± LF OF PERIMETER FENCING TO MATCH.
11. RETAINING WALL PER STRUCTURAL SHEET S2.10.
12. PRECAST CONCRETE EFFLUENT SAMPLE BOX PER SHEET M5.0.
13. OPERATIONS ROOM PER SHEET M7.0.

PROPOSED SITE PLAN

NORTH

40 20 0 40 80

100% ISSUED FOR BID

CALL TWO WORKING DAYS BEFORE YOU DIG
602-263-1100
1-800-STAKE-IT
(OUTSIDE MARICOPA COUNTY)

NO	BY	DATE	REVISIONS	DATE	APP.

Registered Professional Engineer (Civil) CERTIFICATE NO. 70097 Taylor B. Pierce Signed ARIZONA, U.S.A. Expires 12/31/28

THESE DRAWINGS ARE THE PROPERTY OF P.A.C.E. AND SHALL NOT BE REPRODUCED IN ANY MANNER NOR BE USED FOR CONSTRUCTION UNLESS STAMPED 'ISSUED FOR CONSTRUCTION'.

PREPARED BY: PACE
DESIGNED BY: NE
DRAWN BY: DS, WW
CHECKED BY: TP
SCALE: AS NOTED
DATE: NOV 2025
JOB NO.: B614

TITLE: **PROPOSED SITE PLAN**

JOB: TOWN OF JEROME WASTEWATER TREATMENT PLANT
YAVAPAI CO. AZ

PACE
Advanced Water Engineering
8123 E. VIA DE COMMERCIO, 1ST FLOOR, SCOTTSDALE, CA 85258
P: (480) 991-3595 | W: www.pacewater.com

PREPARED BY: TAYLOR B. PIERCE R.C.E. 70097 DATE

SHEET **M2.0**
29 OF 99 SHEETS

JOB NO. B614

W:\B614\Engineering\B614-33\sheets\B614 - M2.0 SITE PLANS.dwg - Tab: SITE PLAN - by reddington on 03/10/26 at 2:18:11 PM

CONSTRUCTION NOTES:

1. INSTALL 2" SCH. 80 PVC PIPE.
2. INSTALL 4" C900 PVC PIPE.
3. INSTALL 4" - 45° D.I. BEND W/ MJ CONNECTIONS W/ THRUST BLOCKS PER DETAIL C SHEET M8.0.
4. REPLACE 10± LF OF PERIMETER FENCING TO MATCH.
5. INSTALL 2" PVC COUPLING.
6. TRENCH AND BACKFILL PER DETAIL D, SHEET M8.1.
7. CONTRACTOR TO PROVIDE FITTINGS AS REQUIRED TO CONNECT TO LIFT STATION DISCHARGE PIPING

EARTHWORK ESTIMATE (UNADJUSTED)

CUT	1,465	Cu. Yd.
FILL	0	Cu. Yd.
NET	1,465	Cu. Yd. <CUT>

CONTRACTOR SHALL VERIFY EARTHWORK QUANTITIES

POINT TABLE			
PNT. #	NORTHING	EASTING	DESCRIPTION
1	1366308.34	642657.44	OF BSN BTM CNR
2	1366131.64	642724.07	OF BSN BTM CNR
3	1366299.09	642632.53	OF BSN BTM CNR
4	1366121.64	642697.12	OF BSN BTM CNR
5	1366295.09	642622.30	LS CTR

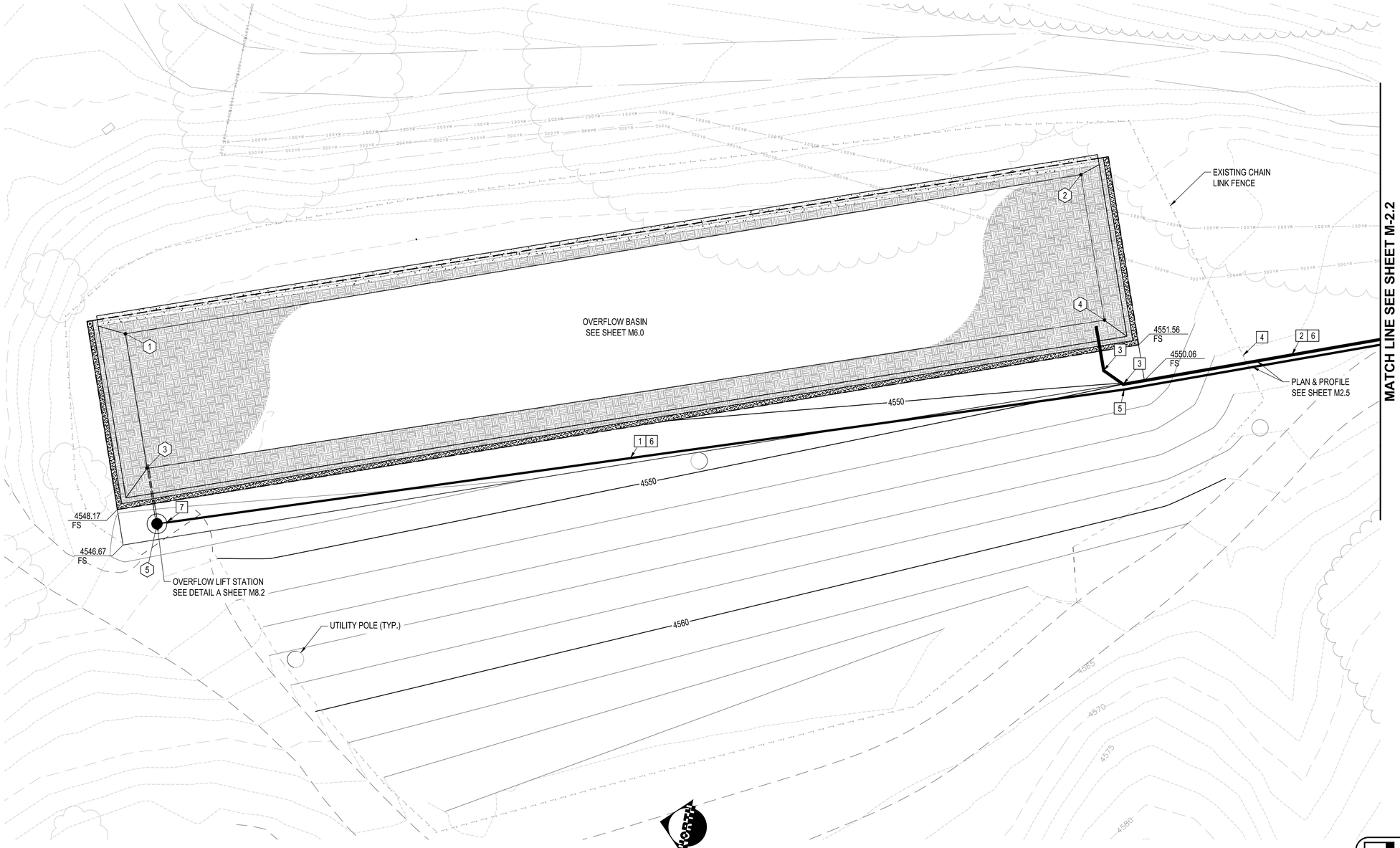

YARD PIPING & GRADING PLAN
SCALE: 1" = 10'

CALL TWO WORKING DAYS BEFORE YOU DIG
602-263-1100
1-800-STAKE-IT
(OUTSIDE MARICOPA COUNTY)

100% ISSUED FOR BID

NO	BY	DATE	REVISIONS	DATE	APP.

Registered Professional Engineer (Civil) CERTIFICATE NO. 70097 TAYLOR B. PIERCE Signed ARIZONA, U.S.A. Expires 12/31/28

THESE DRAWINGS ARE THE PROPERTY OF P.A.C.E. AND SHALL NOT BE REPRODUCED IN ANY MANNER NOR BE USED FOR CONSTRUCTION UNLESS STAMPED 'ISSUED FOR CONSTRUCTION'.

PREPARED BY: PACE
DESIGNED BY: NE
DRAWN BY: DS, WW
CHECKED BY: TP
SCALE: AS NOTED
DATE: NOV 2025
JOB NO.: B614

TITLE: YARD PIPING & GRADING PLAN

JOB: TOWN OF JEROME WASTEWATER TREATMENT PLANT
YAVAPAI CO. AZ

PREPARED BY: TAYLOR B. PIERCE R.C.E 70097 DATE
PACE
Advanced Water Engineering
8723 E. Via de Ventura Suite 110 SCOTTSDALE, CA 85258
P: (480) 991-3595 | www.pacewater.com

SHEET M2.1
30 OF 99 SHEETS

JOB NO. B614

W:\B614 Engineering\B614-30\shared\B614 - M2.1 YARD PIPING - OLD VERSION RESTORED.dwg - Tab: M2.1 - by reddington on 03/10/26 at 2:03:53 PM

CONSTRUCTION NOTES:

1. INSTALL 2" SCH. 80 PVC PIPE.
2. INSTALL 2" - 11.25° SCH. 80 PVC BEND.
3. INSTALL 4" C900 PVC PIPE.
4. INSTALL 4" - 11.25° D.I. BEND W/ MJ CONNECTIONS W/ THRUST BLOCKS PER DETAIL C SHEET M8.0.
5. TRENCH AND BACKFILL PER DETAIL D, SHEET M8.1.

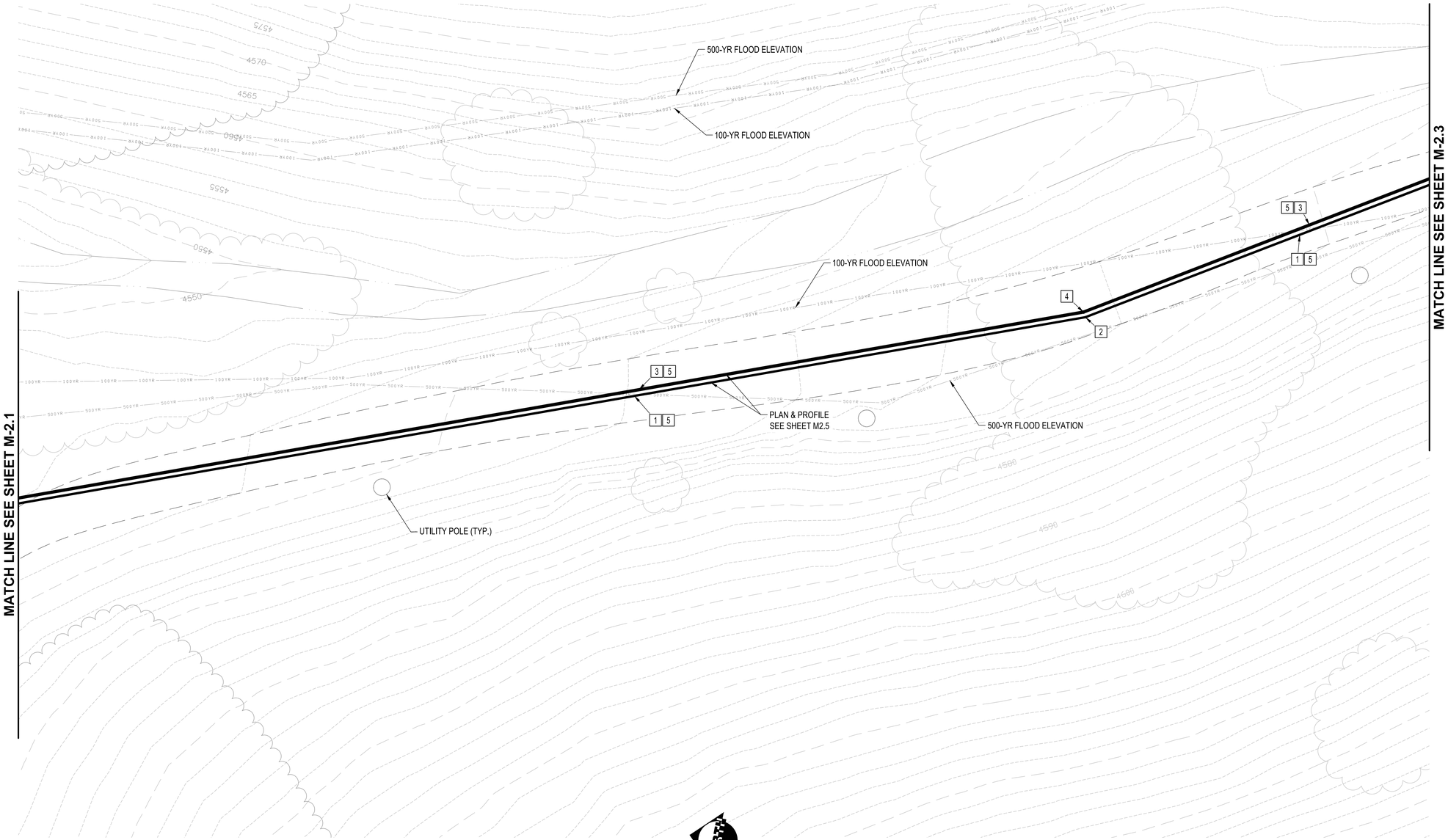

YARD PIPING PLAN
SCALE: 1" = 10'

NORTH
10 5 0 10 20

CALL TWO WORKING DAYS BEFORE YOU DIG
602-263-1100
1-800-STAKE-IT
(OUTSIDE MARICOPA COUNTY)

100% ISSUED FOR BID

NO	BY	DATE	REVISIONS	DATE	APP.

Registered Professional Engineer (Civil)
CERTIFICATE NO. 70097
TAYLOR B. PIERCE
ARIZONA, U.S.A.
Signed
Expires 12/31/28

THESE DRAWINGS ARE THE PROPERTY OF P.A.C.E. AND SHALL NOT BE REPRODUCED IN ANY MANNER NOR BE USED FOR CONSTRUCTION UNLESS STAMPED 'ISSUED FOR CONSTRUCTION'.

PREPARED BY: PACE
DESIGNED BY: NE
DRAWN BY: DS, WW
CHECKED BY: TP
SCALE: AS NOTED
DATE: NOV 2025
JOB NO.: B614

TITLE: YARD PIPING PLAN

JOB: TOWN OF JEROME
WASTEWATER
TREATMENT PLANT
YAVAPAI CO. AZ

PREPARED BY:
PACE
Advanced Water Engineering
8723 E. Via de Commercio, Suite 100, SCOTTSDALE, CA 85258
P: (480) 991-3595 | www.pacewater.com
TAYLOR B. PIERCE R.C.E 70097 DATE

SHEET
M2.2
31 OF 99 SHEETS

JOB NO. B614

W:\B614\Engineering\B614-30\sheets\B614 - M2.1 YARD PIPING - OLD VERSION RESTORED.dwg - Tab: M2.2 - by reddington on 03/10/26 at 2:05:53 PM

CONSTRUCTION NOTES:

1. INSTALL 2" SCH. 80 PVC PIPE.
2. INSTALL 2" - 22.5° SCH. 80 PVC BEND.
3. INSTALL 4" D.I. PIPE.
4. INSTALL 4" C900 PVC PIPE.
5. INSTALL 4" - 22.5° D.I. BEND W/ MJ FITTINGS W/ THRUST BLOCKS PER DETAIL C SHEET M8.0.
6. INSTALL CLEANOUT PER DETAIL I SHEET M8.3.
7. INSTALL PVC TO DIP TRANSITION COUPLING, ROMAC OR EQUAL.
8. TRENCH AND BACKFILL PER DETAIL D, SHEET M8.1.

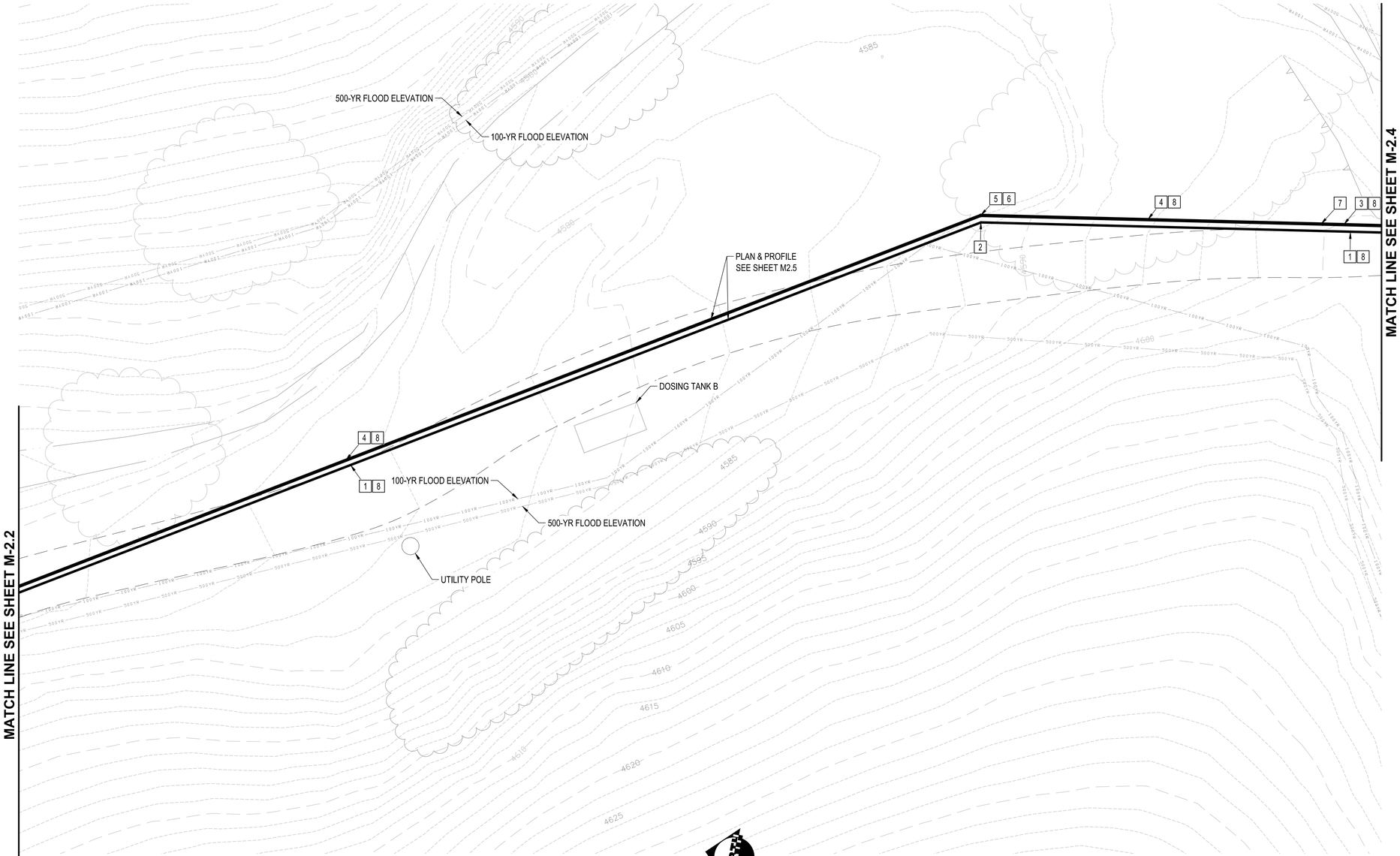

YARD PIPING PLAN
SCALE: 1" = 10'

NORTH
10 5 0 10 20

NO	BY	DATE	REVISIONS	DATE	APP.

THESE DRAWINGS ARE THE PROPERTY OF P.A.C.E. AND SHALL NOT BE REPRODUCED IN ANY MANNER NOR BE USED FOR CONSTRUCTION UNLESS STAMPED 'ISSUED FOR CONSTRUCTION'.

Registered Professional Engineer (Civil) CERTIFICATE NO. 70097 TAYLOR B. PIERCE Signed ARIZONA, U.S.A. Expires 12/31/28

PREPARED BY: PACE
DESIGNED BY: NE
DRAWN BY: DS, WW
CHECKED BY: TP
SCALE: AS NOTED
DATE: NOV 2025
JOB NO.: B614

TITLE: YARD PIPING

JOB: TOWN OF JEROME WASTEWATER TREATMENT PLANT
YAVAPAI CO. AZ

100% ISSUED FOR BID

PREPARED BY:
PACE
Advanced Water Engineering
8723 E. VIA de COMMERCIO, 1ST FLOOR, SCOTTSDALE, CA 85258
P: (480) 991-3595 | www.jacowater.com
TAYLOR B. PIERCE R.C.E. 70097 DATE

SHEET M2.3
32 OF 99 SHEETS

JOB NO. B614

W:\B614\Engineering\B614-3\sheet\B614 - M2.1 YARD PIPING - OLD VERSION RESTORED.dwg - Tab: M2.3 - by reddington on 03/10/26 at 2:03:53 PM

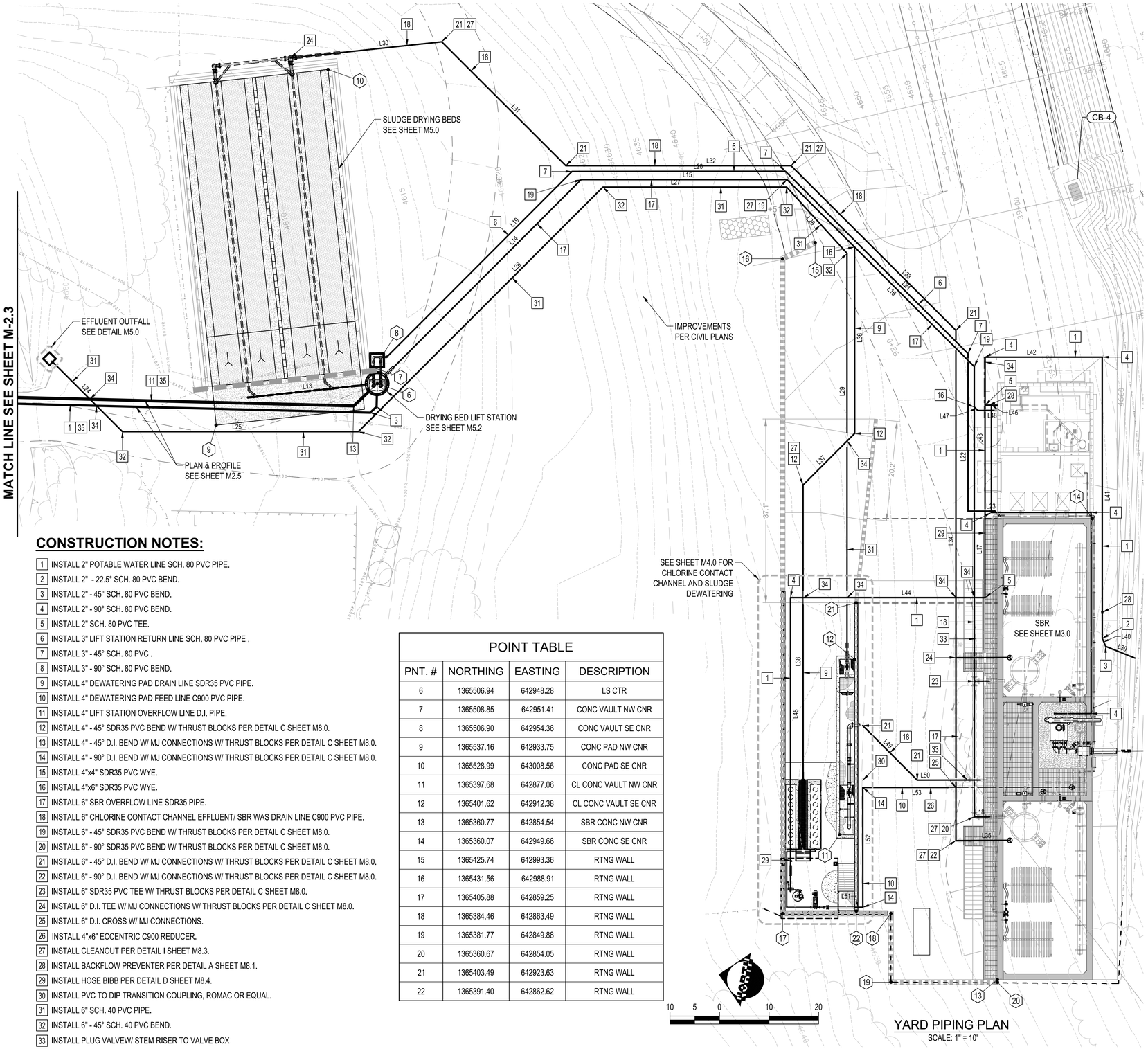

YARD PIPING PLAN
SCALE: 1" = 10'

CONSTRUCTION NOTES:

1. INSTALL 2" POTABLE WATER LINE SCH. 80 PVC PIPE.
2. INSTALL 2" - 22.5° SCH. 80 PVC BEND.
3. INSTALL 2" - 45° SCH. 80 PVC BEND.
4. INSTALL 2" - 90° SCH. 80 PVC BEND.
5. INSTALL 2" SCH. 80 PVC TEE.
6. INSTALL 3" LIFT STATION RETURN LINE SCH. 80 PVC PIPE .
7. INSTALL 3" - 45° SCH. 80 PVC .
8. INSTALL 3" - 90° SCH. 80 PVC BEND.
9. INSTALL 4" DEWATERING PAD DRAIN LINE SDR35 PVC PIPE.
10. INSTALL 4" DEWATERING PAD FEED LINE C900 PVC PIPE.
11. INSTALL 4" LIFT STATION OVERFLOW LINE D.I. PIPE.
12. INSTALL 4" - 45° SDR35 PVC BEND W/ THRUST BLOCKS PER DETAIL C SHEET M8.0.
13. INSTALL 4" - 45° D.I. BEND W/ MJ CONNECTIONS W/ THRUST BLOCKS PER DETAIL C SHEET M8.0.
14. INSTALL 4" - 90° D.I. BEND W/ MJ CONNECTIONS W/ THRUST BLOCKS PER DETAIL C SHEET M8.0.
15. INSTALL 4"x4" SDR35 PVC WYE.
16. INSTALL 4"x6" SDR35 PVC WYE.
17. INSTALL 6" SBR OVERFLOW LINE SDR35 PIPE.
18. INSTALL 6" CHLORINE CONTACT CHANNEL EFFLUENT/ SBR WAS DRAIN LINE C900 PVC PIPE.
19. INSTALL 6" - 45° SDR35 PVC BEND W/ THRUST BLOCKS PER DETAIL C SHEET M8.0.
20. INSTALL 6" - 90° SDR35 PVC BEND W/ THRUST BLOCKS PER DETAIL C SHEET M8.0.
21. INSTALL 6" - 45° D.I. BEND W/ MJ CONNECTIONS W/ THRUST BLOCKS PER DETAIL C SHEET M8.0.
22. INSTALL 6" - 90° D.I. BEND W/ MJ CONNECTIONS W/ THRUST BLOCKS PER DETAIL C SHEET M8.0.
23. INSTALL 6" SDR35 PVC TEE W/ THRUST BLOCKS PER DETAIL C SHEET M8.0.
24. INSTALL 6" D.I. TEE W/ MJ CONNECTIONS W/ THRUST BLOCKS PER DETAIL C SHEET M8.0.
25. INSTALL 6" D.I. CROSS W/ MJ CONNECTIONS.
26. INSTALL 4"x6" ECCENTRIC C900 REDUCER.
27. INSTALL CLEANOUT PER DETAIL I SHEET M8.3.
28. INSTALL BACKFLOW PREVENTER PER DETAIL A SHEET M8.1.
29. INSTALL HOSE BIBB PER DETAIL D SHEET M8.4.
30. INSTALL PVC TO DIP TRANSITION COUPLING, ROMAC OR EQUAL.
31. INSTALL 6" SCH. 40 PVC PIPE.
32. INSTALL 6" - 45° SCH. 40 PVC BEND.
33. INSTALL PLUG VALVEW/ STEM RISER TO VALVE BOX
34. POTABLE WATER & SEWER SEPERATION PER DETAIL F SHEET M8.3
35. TRENCH AND BACKFILL PER DETAIL D, SHEET M8.1.

POINT TABLE

PNT. #	NORTHING	EASTING	DESCRIPTION
6	1365506.94	642948.28	LS CTR
7	1365508.85	642951.41	CONC VAULT NW CNR
8	1365506.90	642954.36	CONC VAULT SE CNR
9	1365537.16	642933.75	CONC PAD NW CNR
10	1365528.99	643008.56	CONC PAD SE CNR
11	1365397.68	642877.06	CL CONC VAULT NW CNR
12	1365401.62	642912.38	CL CONC VAULT SE CNR
13	1365360.77	642854.54	SBR CONC NW CNR
14	1365360.07	642949.66	SBR CONC SE CNR
15	1365425.74	642993.36	RTNG WALL
16	1365431.56	642988.91	RTNG WALL
17	1365405.88	642859.25	RTNG WALL
18	1365384.46	642863.49	RTNG WALL
19	1365381.77	642849.88	RTNG WALL
20	1365360.67	642854.05	RTNG WALL
21	1365403.49	642923.63	RTNG WALL
22	1365391.40	642862.62	RTNG WALL

LINE DATA

LINE #	DISTANCE	BEARING	START POINT	END POINT
L13	22.48'	S17°18'33"E	N 1365530.33, E 642940.99	N 1365508.86, E 642947.68
L14	56.23'	S56°12'23"E	N 1365505.83, E 642949.94	N 1365474.55, E 642996.68
L15	41.55'	S11°12'16"E	N 1365474.55, E 642996.68	N 1365433.79, E 643004.75
L16	53.40'	S33°46'31"W	N 1365433.79, E 643004.75	N 1365389.40, E 642975.07
L17	90.91'	S78°47'08"W	N 1365389.40, E 642975.07	N 1365371.72, E 642885.90
L18	3.06'	S11°12'16"E	N 1365371.72, E 642885.90	N 1365368.72, E 642886.49
L19	52.66'	S56°14'49"E	N 1365505.95, E 642954.14	N 1365476.69, E 642997.93
L20	43.07'	S11°14'49"E	N 1365476.69, E 642997.93	N 1365434.44, E 643006.33
L21	52.08'	S33°46'38"W	N 1365434.44, E 643006.33	N 1365391.15, E 642977.37
L22	31.78'	S78°47'08"W	N 1365391.15, E 642977.37	N 1365384.97, E 642946.20
L23	5.63'	S11°12'52"E	N 1365384.97, E 642946.20	N 1365379.45, E 642947.29
L24	19.82'	S33°47'52"W	N 1365571.96, E 642939.80	N 1365555.49, E 642928.78
L25	47.61'	S11°12'09"E	N 1365555.49, E 642928.78	N 1365508.79, E 642938.03
L26	69.82'	S56°12'21"E	N 1365508.79, E 642938.03	N 1365469.95, E 642996.05
L27	37.08'	S11°11'56"E	N 1365469.95, E 642996.05	N 1365433.58, E 643003.25
L28	18.14'	S36°24'57"W	N 1365433.58, E 643003.25	N 1365418.98, E 642992.48
L29	91.27'	S78°48'35"W	N 1365418.98, E 642992.48	N 1365401.27, E 642902.95
L30	30.72'	S17°17'44"E	N 1365536.89, E 643009.37	N 1365507.56, E 643018.50
L31	35.41'	S33°46'20"W	N 1365507.56, E 643018.50	N 1365478.13, E 642998.82
L32	45.45'	S11°13'40"E	N 1365478.13, E 642998.82	N 1365433.55, E 643007.67
L33	47.02'	S33°47'44"W	N 1365433.55, E 643007.67	N 1365394.47, E 642981.52
L34	103.00'	S78°47'25"W	N 1365394.47, E 642981.52	N 1365374.45, E 642880.48
L35	10.88'	S11°24'18"E	N 1365374.45, E 642880.48	N 1365363.79, E 642882.63
L36	37.61'	N78°47'08"E	N 1365410.46, E 642957.14	N 1365417.77, E 642994.04
L37	14.74'	S56°12'52"E	N 1365418.65, E 642944.90	N 1365410.46, E 642957.14
L38	59.50'	N78°47'08"E	N 1365407.08, E 642886.53	N 1365418.65, E 642944.90
L39	6.37'	S10°40'27"W	N 1365352.41, E 642924.80	N 1365346.15, E 642923.62
L40	1.74'	S55°40'27"W	N 1365353.39, E 642926.23	N 1365352.41, E 642924.80
L41	56.80'	S78°47'44"W	N 1365364.43, E 642981.96	N 1365353.39, E 642926.23
L42	23.67'	S11°12'16"E	N 1365387.65, E 642977.36	N 1365364.43, E 642981.96
L43	48.55'	N78°47'44"E	N 1365378.21, E 642929.73	N 1365387.65, E 642977.36
L44	39.25'	S11°12'16"E	N 1365416.71, E 642922.10	N 1365378.21, E 642929.73
L45	59.28'	N78°47'44"E	N 1365405.19, E 642863.95	N 1365416.71, E 642922.10
L46	2.50'	N11°12'16"W	N 1365383.31, E 642968.33	N 1365385.76, E 642967.84
L47	1.00'	N33°47'44"E	N 1365386.98, E 642966.52	N 1365387.82, E 642967.07
L48	3.25'	N11°11'39"W	N 1365383.80, E 642967.15	N 1365386.98, E 642966.52
L49	15.57'	S33°47'44"W	N 1365397.42, E 642899.59	N 1365384.48, E 642890.93
L50	14.13'	S11°20'19"E	N 1365384.48, E 642890.93	N 1365370.63, E 642893.71
L51	1.67'	S11°12'52"E	N 1365391.90, E 642863.29	N 1365390.26, E 642863.62
L52	24.20'	N78°47'08"E	N 1365390.26, E 642863.62	N 1365394.97, E 642887.36
L53	42.17'	S11°12'24"E	N 1365394.97, E 642887.36	N 1365353.60, E 642895.55

NO	BY	DATE	REVISIONS	DATE	APP.

Registered Professional Engineer (Civil)
CERTIFICATE NO.
Timothy R. Pace
Signed
ARIZONA, U.S.A.
Expires 12/31/28

THESE DRAWINGS ARE THE PROPERTY OF P.A.C.E. AND SHALL NOT BE REPRODUCED IN ANY MANNER NOR BE USED FOR CONSTRUCTION UNLESS STAMPED 'ISSUED FOR CONSTRUCTION'.

PREPARED BY: PACE
DESIGNED BY: NE
DRAWN BY: DS, WW
CHECKED BY: TP
SCALE: AS NOTED
DATE: NOV 2025
JOB NO.: B614

TITLE: YARD PIPING

JOB: TOWN OF JEROME
WASTEWATER
TREATMENT PLANT
YAVAPAI CO. AZ

100% ISSUED FOR BID

PACE
Advanced Water Engineering
8723 E. Via de Commercio, Suite 104, Scottsdale, CA 85258
P: (480) 991-3595 | www.pacewater.com
R.C.E 70097

PREPARED BY: TAYLOR B. PIERCE DATE

CALL TWO WORKING DAYS
BEFORE YOU DIG
602-263-1100
1-800-STAKE-IT
(OUTSIDE MARICOPA COUNTY)

SHEET
M2.4
33 OF 99 SHEETS

JOB NO. B614

W:\B614-Engineering\B614-3\sheets\B614 - M2.1 YARD PIPING - OLD VERSION RESTORED.dwg - Tab: M2.4 - by reddington on 03/10/26 at 2:03:53 PM

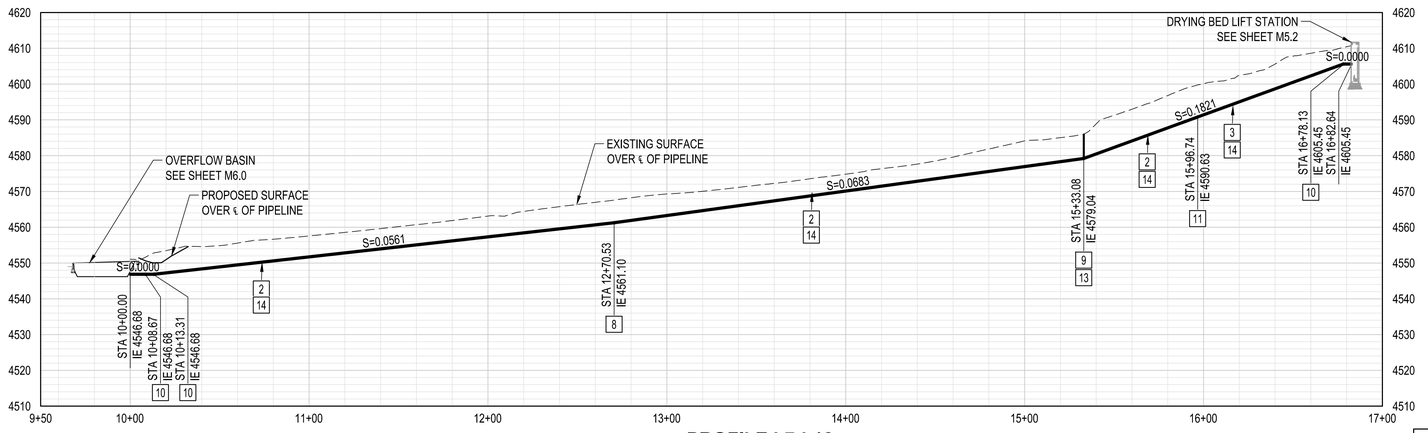

PROFILE L7-L12

SCALE: HORZ: 1" = 40'
VERT: 1" = 20'

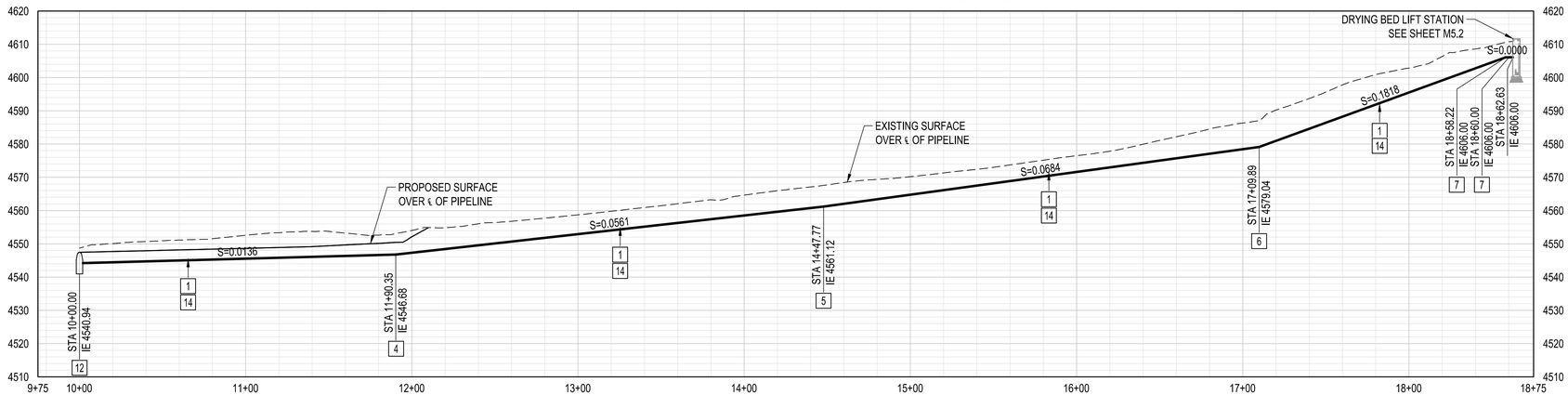

PROFILE L1-L6

SCALE: HORZ: 1" = 40'
VERT: 1" = 20'

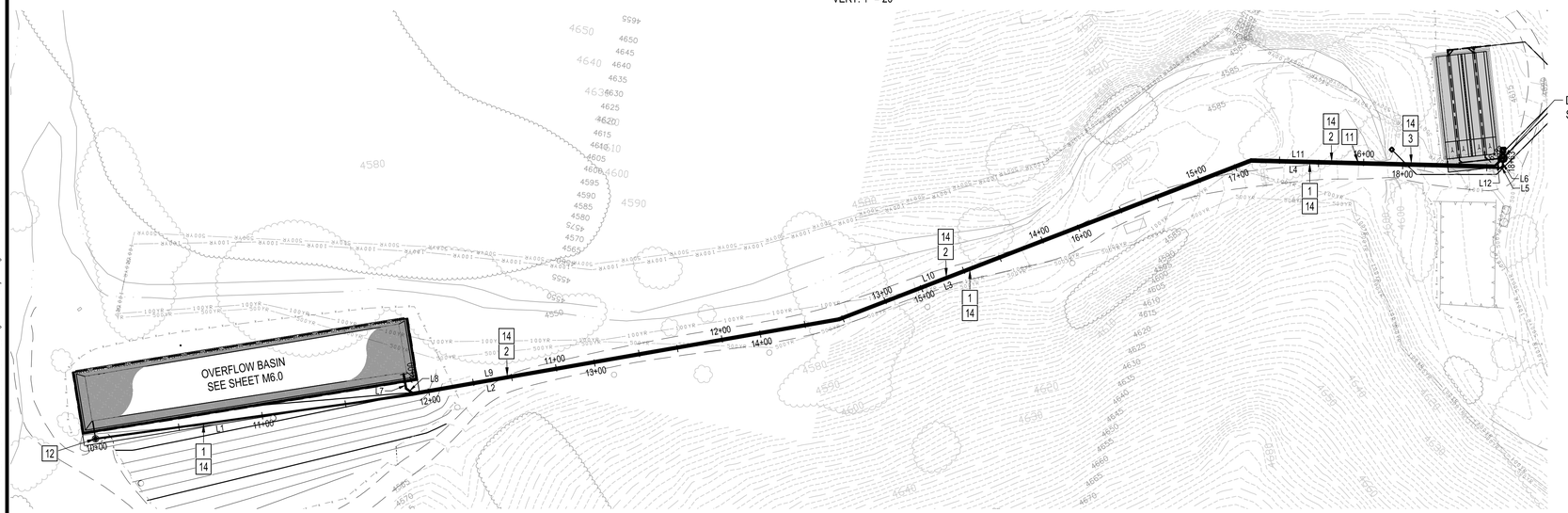

PLAN

SCALE: 1" = 40'

CONSTRUCTION NOTES:

1. INSTALL 2" SCH. 80 PVC PIPE.
2. INSTALL 4" C900 PVC PIPE.
3. INSTALL 4" D.I. PIPE.
4. INSTALL 2" PVC COUPLING.
5. INSTALL 2" - 11.25° SCH. 80 PVC BEND.
6. INSTALL 2" - 22.5° SCH. 80 PVC BEND.
7. INSTALL 2" - 45° SCH. 80 PVC BEND.
8. INSTALL 4" - 11.25° D.I. BEND W/ MJ CONNECTIONS W/ THRUST BLOCKS PER DETAIL C SHEET M8.0.
9. INSTALL 4" - 22.5° D.I. BEND W/ MJ CONNECTIONS W/ THRUST BLOCKS PER DETAIL C SHEET M8.0.
10. INSTALL 4" - 45° D.I. BEND W/ MJ CONNECTIONS W/ THRUST BLOCKS PER DETAIL C SHEET M8.0.
11. INSTALL PVC TO DIP TRANSITION COUPLING, ROMAC OR EQUAL.
12. INSTALL OVERFLOW LIFT STATION PER DETAIL A, SHEET M8.2.
13. INSTALL CLEANOUT PER DETAIL I SHEET M8.3.
14. TRENCH AND BACKFILL PER DETAIL D, SHEET M8.1.

LINE DATA

LINE #	DISTANCE	BEARING	START POINT	END POINT
L1	190.35'	S19°06'20"E	N 1366295.09, E 642622.30	N 1366115.23, E 642684.60
L2	257.42'	S21°06'20"E	N 1366115.23, E 642684.60	N 1365875.07, E 642777.30
L3	262.12'	S32°14'38"E	N 1365875.07, E 642777.30	N 1365653.38, E 642917.15
L4	148.33'	S9°44'37"E	N 1365653.38, E 642917.15	N 1365507.19, E 642942.25
L5	1.78'	S54°44'37"E	N 1365507.19, E 642942.25	N 1365506.16, E 642943.70
L6	2.63'	N80°21'09"E	N 1365506.16, E 642943.70	N 1365506.60, E 642946.29
L7	8.67'	S69°03'53"W	N 1366122.94, E 642695.54	N 1366119.84, E 642687.44
L8	4.64'	S23°54'58"W	N 1366119.84, E 642687.44	N 1366115.60, E 642685.56
L9	257.22'	S21°06'20"E	N 1366115.60, E 642685.56	N 1365875.63, E 642778.18
L10	262.55'	S32°17'02"E	N 1365875.63, E 642778.18	N 1365653.67, E 642918.41
L11	145.05'	S9°44'32"E	N 1365653.67, E 642918.41	N 1365510.71, E 642942.95
L12	4.51'	S54°44'04"E	N 1365510.71, E 642942.95	N 1365508.11, E 642946.64

NO	BY	DATE	REVISIONS	DATE	APP.

Professional Engineer (Civil)
CERTIFICATE NO.
Registered
Signed
ARIZONA, U.S.A.
Expires 12/31/28

PREPARED BY: PACE
DESIGNED BY: NE
DRAWN BY: DS, WW
CHECKED BY: TP
SCALE: AS NOTED
DATE: NOV 2025
JOB NO.: B614

THESE DRAWINGS ARE THE PROPERTY OF P.A.C.E. AND SHALL NOT BE REPRODUCED IN ANY MANNER NOR BE USED FOR CONSTRUCTION UNLESS STAMPED 'ISSUED FOR CONSTRUCTION'.

TITLE

PLAN & PROFILE

100% ISSUED FOR BID

JOB

TOWN OF JEROME
WASTEWATER
TREATMENT PLANT

AZ
YAVAPAI CO.

PREPARED BY:

PACE
Advanced Water Engineering
6723 E. VIA CONSUELO, SCOTTSDALE, CA 85258
P: (480) 991-3595 | www.pacewater.com

TAYLOR B. PIERCE R.C.E 70097 DATE

SHEET
M2.5
34 OF 99 SHEETS

JOB NO. B614

NORTH
40 20 0 40 80

CALL TWO WORKING DAYS BEFORE YOU DIG
602-263-1100
1-800-STAKE-IT
(OUTSIDE MARICOPA COUNTY)

W:\B614\Engineering\B614-3\sheets\B614 - M2.1 YARD PIPING - OLD VERSION (RESTORED).dwg - Tab: M2.5 - by reddington on 03/10/26 at 2:03:53 PM

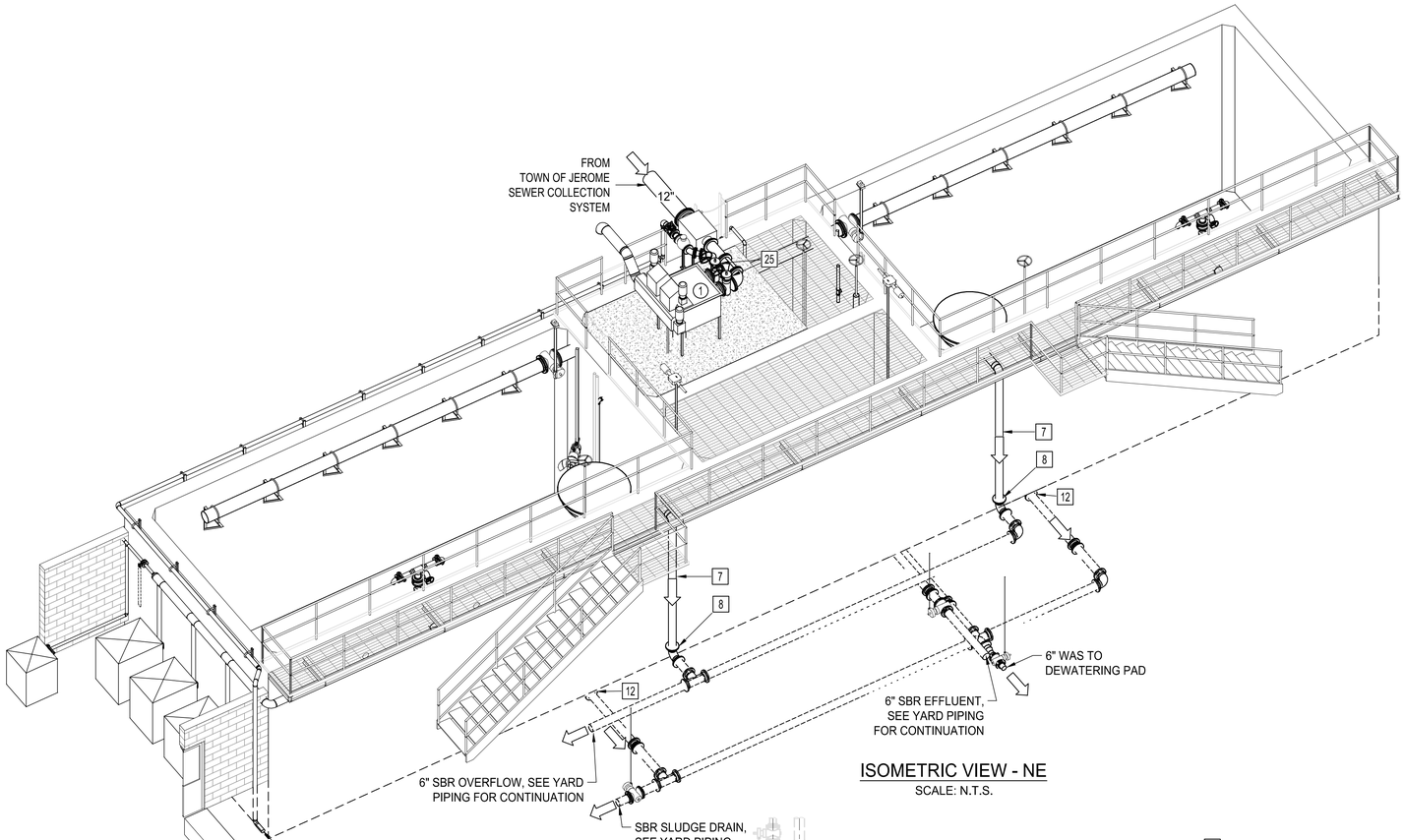

ISOMETRIC VIEW - NE

SCALE: N.T.S.

NOTE:
ROOF AND FOUNDATION SLABS
NOT SHOWN FOR CLARITY.

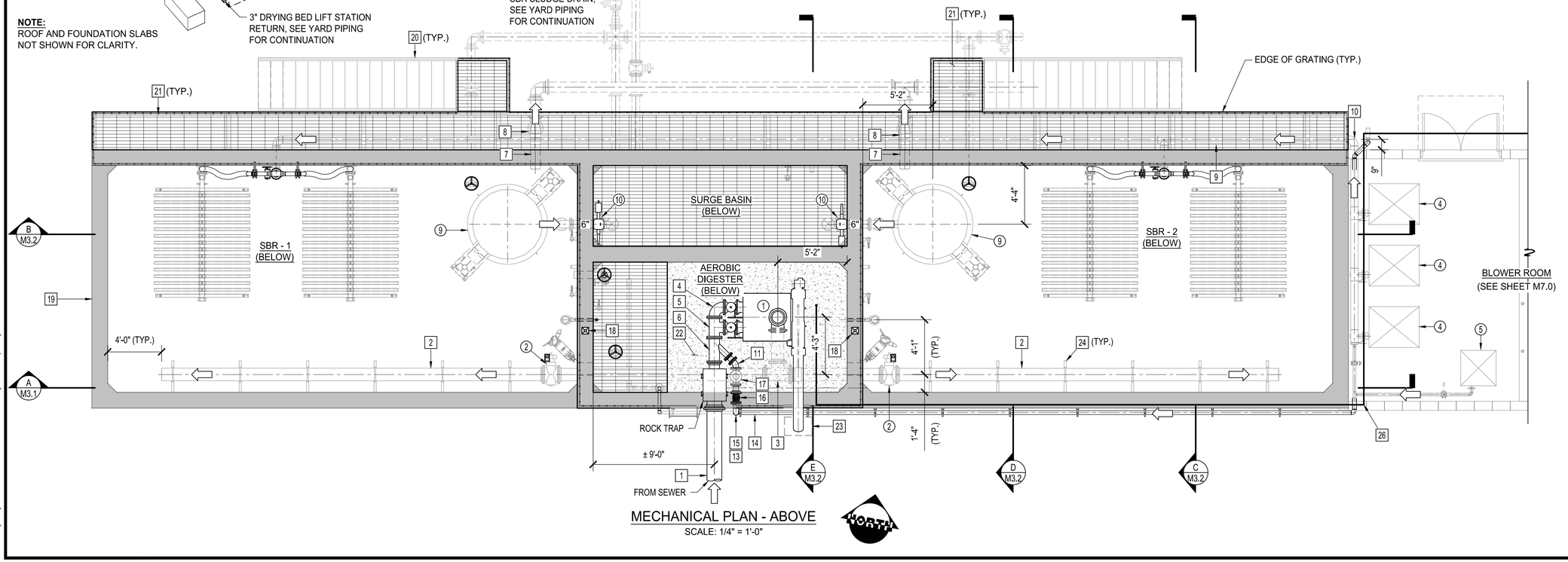

MECHANICAL PLAN - ABOVE

SCALE: 1/4" = 1'-0"

CONSTRUCTION NOTES:

1. INSTALL 12" D.I. PIPE (FLG'D).
2. INSTALL 10" D.I. PIPE (FLG'D).
3. INSTALL 10" D.I. TEE (FLG'D).
4. INSTALL 8" - 90° D.I. BEND (FLG'D).
5. INSTALL 8" D.I. TEE (FLG'D).
6. INSTALL 8"x4" D.I. REDUCING WYE (FLG'D).
7. INSTALL 6" SDR35 PVC PIPE.
8. INSTALL 6" - 90° SDR35 PVC BEND (MJ).
9. INSTALL 6" SCH. 10 CARBON STEEL PIPE.
10. INSTALL 6" - 90° SCH. 10 CARBON STEEL BEND.
11. INSTALL 4" - 45° D.I. BEND (FLG'D).
12. INSTALL 6" - 90° D.I. BEND (MJ).
13. INSTALL 4"x 3" D.I. REDUCER (FLG'D).
14. INSTALL 3" SCH. 80 PVC PIPE.
15. INSTALL 4" - 90° SCH. 80 PVC BEND.
16. INSTALL 4" PVC PLUG VALVE.
17. INSTALL 4" SCH. 80 PVC CHECK VALVE.
18. INSTALL DAVIT CRANE BASE (APPROX. LOCATION).
19. SBR STRUCTURE (SEE STRUCTURAL).
20. STAIRS & RAILING PER MANUFACTURER.
21. GRATING PER MANUFACTURER.
22. CONCRETE SLAB PER STRUCTURAL.
23. WASTE BIN (BY OTHERS).
24. INSTALL PIPE SUPPORTS PER DETAIL A SHT M8.5
25. INSTALL 8" PLUG VALVE, FLG'D.
26. INSTALL 2" SCH. 80 PVC POTABLE WATER

NO	BY	DATE	REVISIONS	DATE	APP.

Registered Professional Engineer (Civil)
CERTIFICATE NO. 70097
Timothy B. Pierce
Signed
ARIZONA, U.S.A.
Expires 12/31/28

THESE DRAWINGS ARE THE PROPERTY OF P.A.C.E. AND SHALL NOT BE REPRODUCED IN ANY MANNER NOR BE USED FOR CONSTRUCTION UNLESS STAMPED 'ISSUED FOR CONSTRUCTION'.

PREPARED BY: PACE
DESIGNED BY: NE
DRAWN BY: DS, WW
CHECKED BY: TP
SCALE: AS NOTED
DATE: NOV 2025
JOB NO.: B614

TITLE
SBR MECHANICAL PLAN

JOB
TOWN OF JEROME
WASTEWATER
TREATMENT PLANT
YAVAPAI CO. AZ

100% ISSUED FOR BID

PREPARED BY:
TAYLOR B. PIERCE R.C.E. 70097 DATE

PACE
Advanced Water Engineering
8723 E. VIA DE COMMERCIO, BLDG. 3, SCOTTSDALE, CA 85258
P: (480) 991-3595 | www.pacewater.com

SHEET
M3.0
35 OF 99 SHEETS

JOB NO. B614

W:\B614\Engineering\B614-3\Sheets\B614 - M3.0 MECHANICAL PLAN.dwg - Tab: M3.0 - by neddington on 02/19/26 at 9:31:42 AM

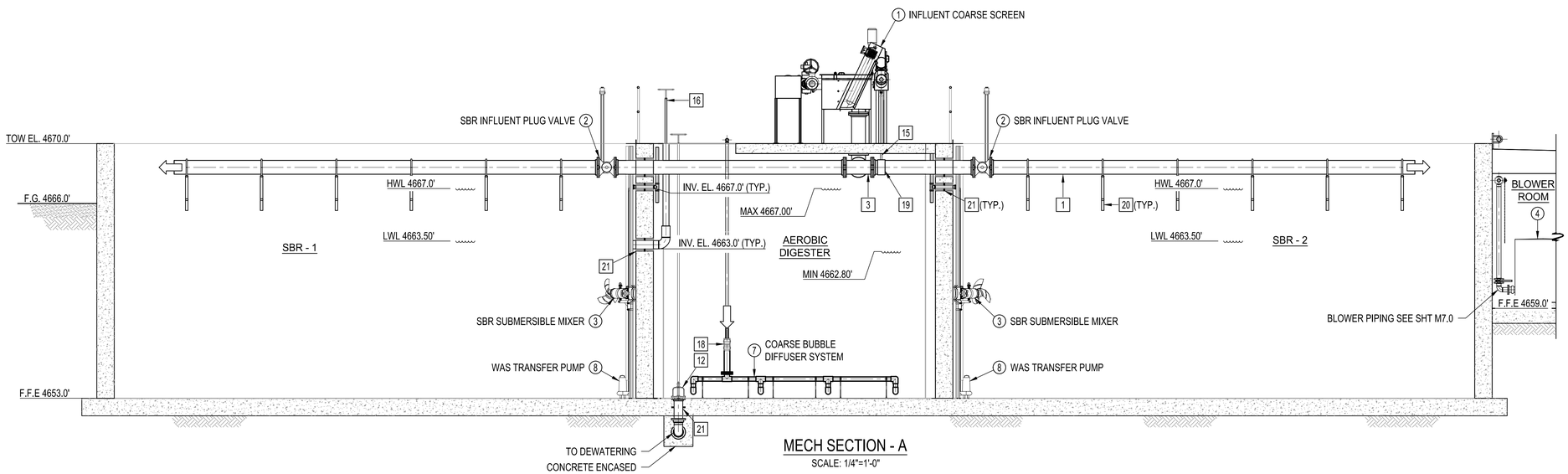

MECH SECTION - A

SCALE: 1/4"=1'-0"

CONSTRUCTION NOTES:

1. INSTALL 10" INFLUENT D.I. PIPE (FLG'D).
2. INSTALL 10" - 90° D.I. BEND (FLG'D).
3. INSTALL 10" D.I. TEE (FLG'D).
4. INSTALL 6" x 4" PVC REDUCER.
5. INSTALL 6" SDR35 PVC PIPE.
6. INSTALL 6" - 90° SDR35 PVC BEND (MJ).
7. INSTALL 6" C900 PVC PIPE.
8. INSTALL 6" - 90° D.I. BEND (MJ).
9. INSTALL 6" C900 PVC CROSS (MJ).
10. INSTALL 6" C900 PVC TEE (MJ).
11. INSTALL 3" SCH. 80 PVC PIPE.
12. INSTALL MUD VALVE w/ STEM RISER (SIZE PER PLAN).
13. SBR STRUCTURE (SEE S2.0).
14. INSTALL 2' x 2' SUMP PER STRUCTURAL PLANS.
15. INSTALL 1" DRAIN LINE FROM SCREEN.
16. INSTALL 6" TELESCOPING VALVE W/ HANDWHEEL.
17. INSTALL 6" BUTTERFLY VALVE W/ ACTUATOR (VENDOR PROVIDED).
18. INSTALL 2"x4" SS TO PVC CONCENTRIC REDUCER (SEE SECTION - A)
19. INSTALL TAP PER PLAN.
20. INSTALL PIPE SUPPORTS PER DETAIL A ON SHEET M8.5.
21. PIPE PENETRATION PER DETAIL G ON SHEET M8.4
22. INSTALL 6" PLUG VALVE.
23. INSTALL 4" PLUG VALVE.
24. INSTALL 6" SCH. 10 CARBON STEEL 90 DEG BEND.
25. INSTALL 6" SCH. 10 CARBON STEEL TEE.
26. INSTALL 6" SCH. 10 CARBON STEEL PIPE.

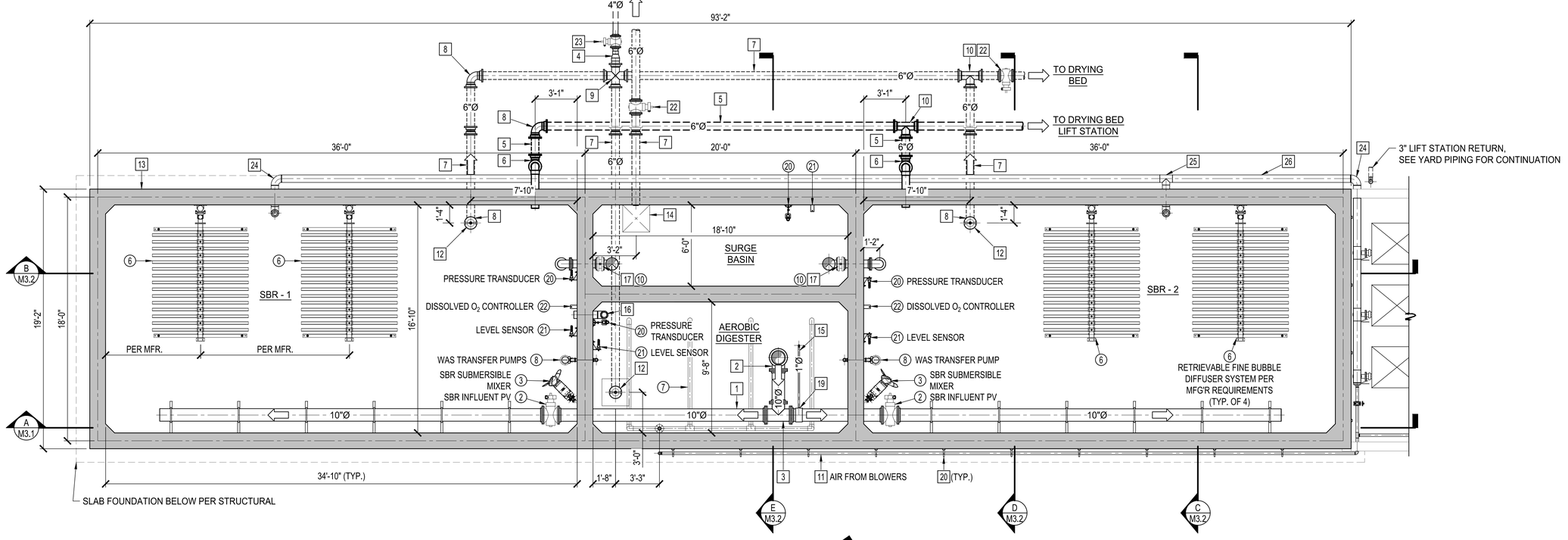

MECHANICAL PLAN - BELOW

SCALE: 1/4" = 1'-0"

NORTH

NO	BY	DATE	REVISIONS	DATE	APP.

Registered Professional Engineer (Civil) CERTIFICATE NO. 70097 Timothy R. Pierce Signed 12/31/25 ARIZONA, U.S.A. Expires 12/31/28

THESE DRAWINGS ARE THE PROPERTY OF P.A.C.E. AND SHALL NOT BE REPRODUCED IN ANY MANNER NOR BE USED FOR CONSTRUCTION UNLESS STAMPED 'ISSUED FOR CONSTRUCTION'.

PREPARED BY: PACE
DESIGNED BY: NE
DRAWN BY: DS, WW
CHECKED BY: TP
SCALE: AS NOTED
DATE: NOV 2025
JOB NO.: B614

TITLE: SBR MECHANICAL PLAN

JOB: TOWN OF JEROME WASTEWATER TREATMENT PLANT — YAVAPAI CO. AZ

100% ISSUED FOR BID

PREPARED BY: TAYLOR B. PIERCE — R.C.E 70097 — DATE

PACE
Advanced Water Engineering
8723 E. Via de Commercio, Suite 1 | Scottsdale, CA 85258
P: (480) 991-3995 | www.pacewater.com

SHEET M3.1
36 OF 99 SHEETS

JOB NO. B614

W:\B614\Engineering\B614-30\sheets\B614 - M3.0 MECHANICAL PLAN.dwg - Tab: M3.1 - by reddington on 02/19/26 at 9:31:42 AM

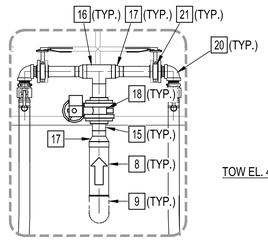

DETAIL - A
SCALE: 1/2"=1'-0"

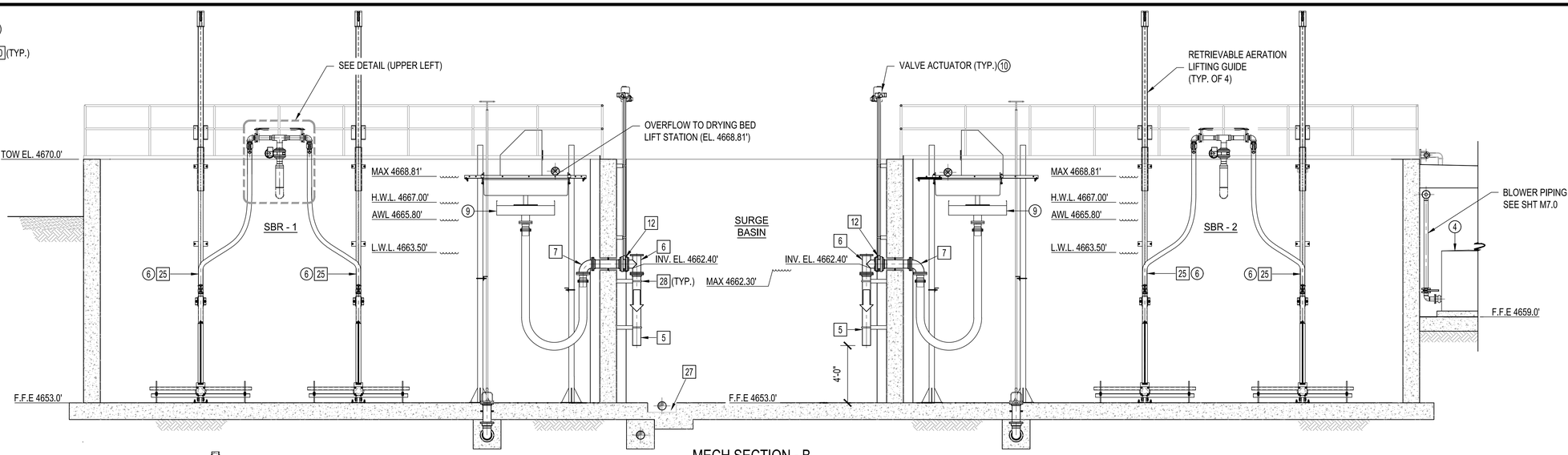

MECH SECTION - B
SCALE: 1/4"=1'-0"

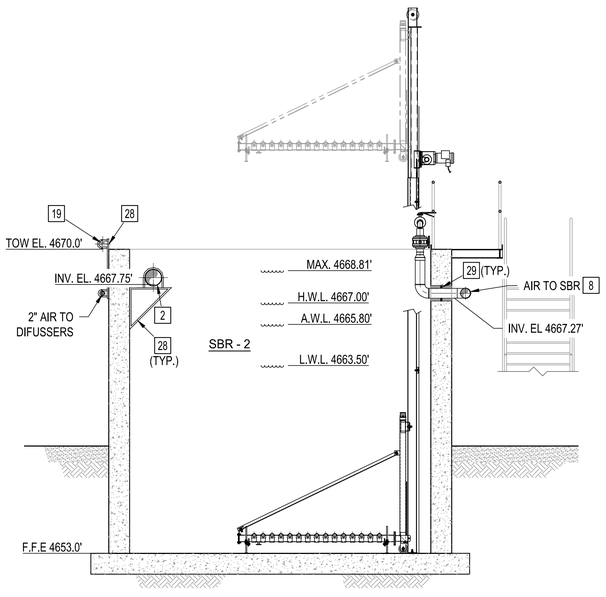

MECH SECTION - C
SCALE: 1/4"=1'-0"

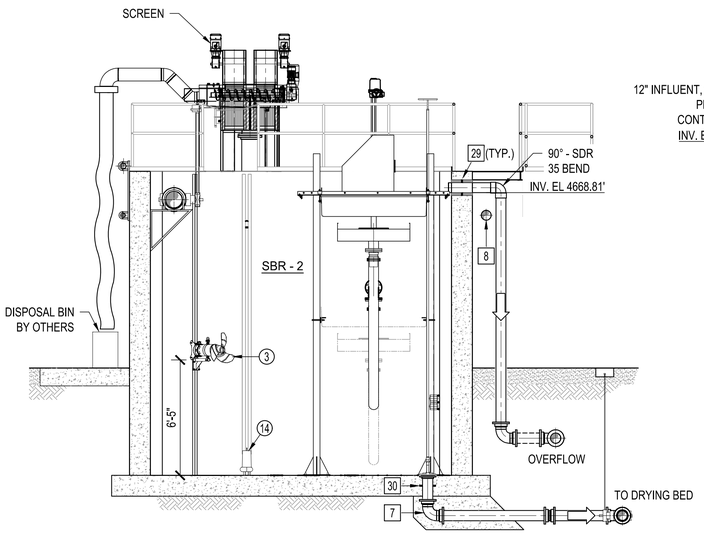

MECH SECTION - D
SCALE: 1/4"=1'-0"

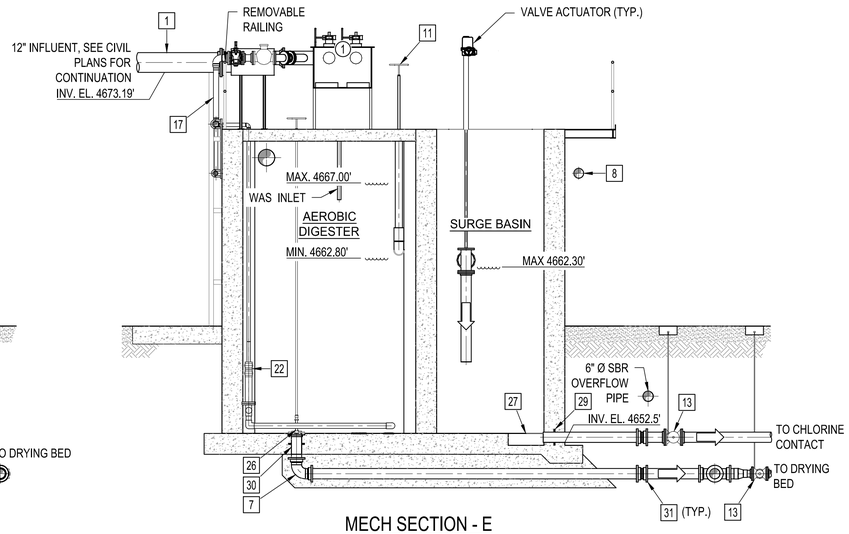

MECH SECTION - E
SCALE: 1/4"=1'-0"

CONSTRUCTION NOTES:

1. INSTALL12" D.I. PIPE (FLG'D).
2. INSTALL 10" INFLUENT D.I. PIPE (FLG'D).
3. INSTALL 10" - 90° D.I. BEND (FLG'D).
4. INSTALL 10" D.I. TEE (FLG'D).
5. INSTALL 6" D.I. PIPE (FLG'D).
6. INSTALL 6" D.I. TEE (FLG'D)
7. INSTALL 6" - 90° D.I. BEND (FLG'D).
8. INSTALL 6" SCH. 10 CARBON STEEL PIPE.
9. INSTALL 6" - 90° CARBON STEEL BEND.
10. INSTALL 6" - 90° CARBON STEEL BEND (FLG'D).
11. INSTALL 6" TELESCOPING VALVE W/ HANDWHEEL.
12. INSTALL 6" BUTTERFLY VALVE W/ ACTUATOR PER SPECIFICATIONS.
13. INSTALL BURRIED-SERVICE 6" PLUG VALVE WITH VALVE CAN AND NUT EXTENSION.
14. INSTALL 4" D.I. PIPE (FLG'D).
15. INSTALL 4" SCH. 10 CARBON STEEL PIPE.
16. INSTALL 4" SCH. 10 CARBON STEEL TEE.
17. INSTALL 4" x 3" SCH. 10 CARBON STEEL CONCENTRIC REDUCER.
18. INSTALL 4" ELECTRICALLY ACTUATED BUTTERFLY VALVE (VENDOR PROVIDED)
19. INSTALL 3" SCH. 80 PVC PIPE.
20. INSTALL 3" - 90° CARBON STEEL BEND (GROOVED).
21. INSTALL 3" BUTTERFLY VALVE PER SPECIFICATIONS.
22. INSTALL 2"x4" SS TO PVC CONCENTRIC REDUCER (SEE SECTION - A)
23. INSTALL 2" SCH. 10 CARBON STEEL PIPE.
24. INSTALL 2" SCH. 10 WELDED CARBON STEEL 90° BEND.
25. INSTALL RETRIEVABLE DIFFUSER ASSEMBLY w/ FLEXIBLE HOSE.
26. INSTALL MUD VALVE w/ EXTENSION PER PLAN.
27. INSTALL 2'x2' SUMP PER STRUCTURAL PLANS.
28. INSTALL PIPE SUPPORTS PER DETAIL A ON SHEET M8.5.
29. INSTALL PIPE PENETRATION PER DETAIL G SHEET M8.4.
30. INSTALL PIPE PENETRATION PER DETAIL F SHEET M8.3.
31. INSTALL DEFLECTION COUPLING.

NO	BY	DATE	REVISIONS	DATE	APP.

Registered Professional Engineer (Civil) CERTIFICATE NO. 70097 Signed Date 12/31/25 ARIZONA, U.S.A. Expires 12/31/26

THESE DRAWINGS ARE THE PROPERTY OF P.A.C.E. AND SHALL NOT BE REPRODUCED IN ANY MANNER NOR BE USED FOR CONSTRUCTION UNLESS STAMPED 'ISSUED FOR CONSTRUCTION'.

PREPARED BY: PACE
DESIGNED BY: NE
DRAWN BY: DS, WW
CHECKED BY: TP
SCALE: AS NOTED
DATE: NOV 2025
JOB NO.: B614

TITLE: **SBR MECHANICAL SECTIONS**

100% ISSUED FOR BID

PREPARED BY: TAYLOR B. PIERCE R.C.E 70097 DATE

PACE
Advanced Water Engineering
8723 E. Via de Ventura Suite 150 | SCOTTSDALE, CA 85258
P: (480) 991-3995 | www.paceaz.com

JOB: TOWN OF JEROME WASTEWATER TREATMENT PLANT YAVAPAI CO. AZ

SHEET **M3.2**
37 OF 99 SHEETS

JOB NO. B614

W:\B614\Engineering\B614-30sheets\B614 - M3.2 MECHANICAL SECTIONS.dwg - Tab: M3.2 - by raddington on 11/17/25 at 2:34:34 PM

CONSTRUCTION NOTES:

1. INSTALL CONCRETE CHLORINE CONTACT CHANNEL PER STRUCTURAL SHT S1.5.
2. INSTALL TABLET EROSION CHLORINATION EQUIPMENT.
3. INSTALL TABLET EROSION DE-CHLORINATION EQUIPMENT.
4. INSTALL SOLID METAL GRATING WALKWAY PER SPECIFICATION 05 53 00.
5. INSTALL UPWARD WEIR GATE PER SPECIFICATION 40 0513.53.
6. INSTALL 6" FLOW METER.
7. INSTALL 6" ACTUATED BUTTERFLY VALVE.
8. INSTALL 3' x 3' CAST IN PLACE BOX & TRAFFIC RATED COVER.
9. INSTALL 6" D.I. PIPE.
10. INSTALL 6" - 90° D.I. BEND.
11. INSTALL 6" - 90° SCH. 40 PVC BEND.
12. INSTALL PIPE SUPPORTS PER DETAIL A SHEET M8.5.
13. INSTALL PVC FLANGE ADAPTER.
14. INSTALL 6" SCH. 40 PVC PIPE.
15. INSTALL 4" ELECTRICALLY ACTUATED PLUG VALVE.
16. INSTALL DEWATERING FEED PUMP.
17. INSTALL DRY POLYMER MAKE-DOWN AND FEED UNIT.
18. INSTALL POLYMER METERING PUMP.
19. INSTALL BAGGER SYSTEM CONTROL PANEL.
20. INSTALL 2" X 1" PVC REDUCING BUSHING.
21. INSTALL 2" SCH. 80 PVC TEE.
22. INSTALL 2" - 90° SCH. 80 PVC BEND.
23. INSTALL PVC CAP.
24. INSTALL 4" X 2" DI REDUCER.
25. INSTALL SHADE STRUCTURE (PER STRUCTURAL SHT S2.10).
26. INSTALL 30" ALUMINUM STEP-UP STAIRCASE.
27. INSTALL METAL GRATING WALKWAY PER SPECIFICATION 05 53 00.
28. INSTALL PIPE PENETRATION PER DETAIL G, SHEET M8.4.

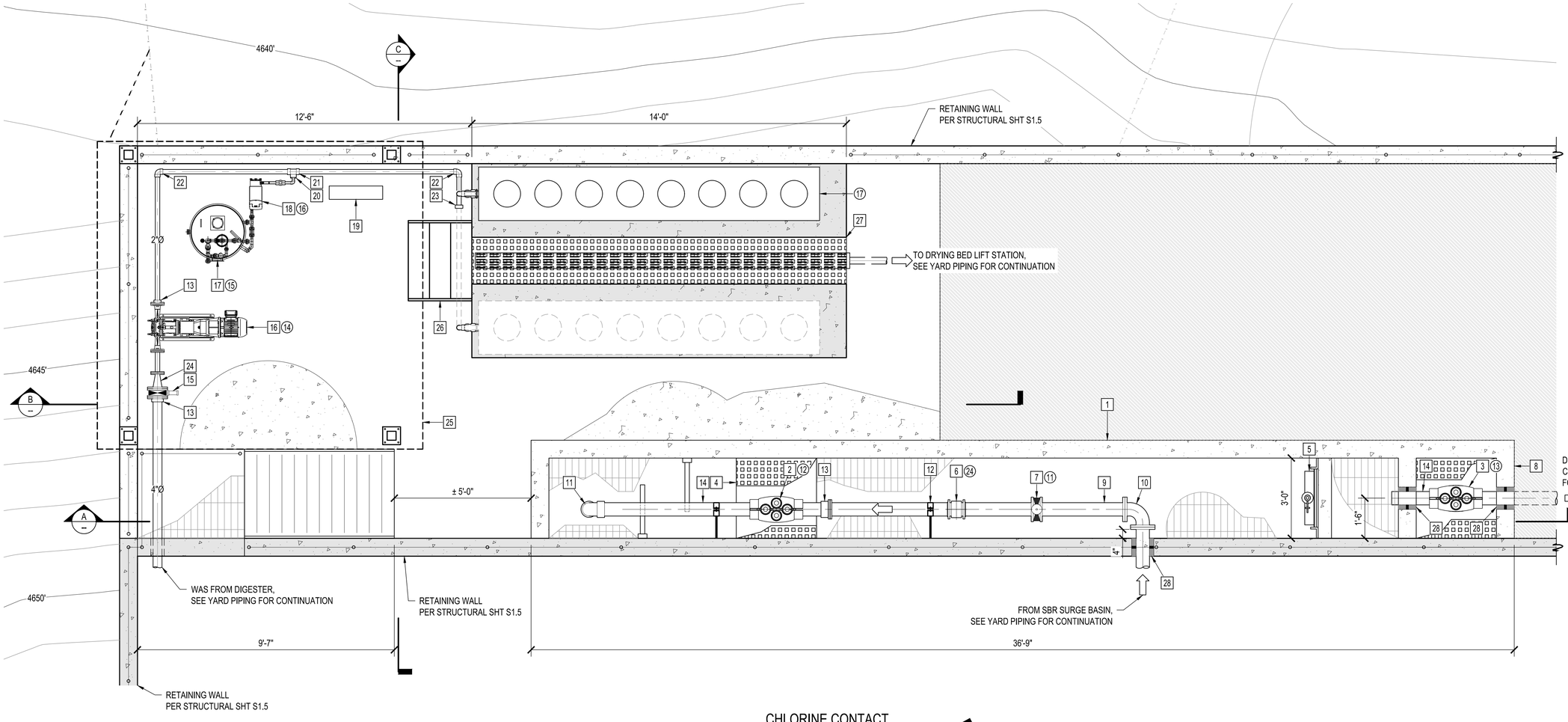

CHLORINE CONTACT
CHANNEL PLAN
SCALE: 1/2"=1'-0"

NORTH

NO	BY	DATE	REVISIONS	DATE	APP.

Registered Professional Engineer (Civil)
CERTIFICATE NO. 70097
Timothy B. Pierce
Signed
ARIZONA, U.S.A.
Expires 12/31/28

THESE DRAWINGS ARE THE PROPERTY OF P.A.C.E. AND SHALL NOT BE REPRODUCED IN ANY MANNER NOR BE USED FOR CONSTRUCTION UNLESS STAMPED 'ISSUED FOR CONSTRUCTION'.

PREPARED BY: PACE
DESIGNED BY: NE
DRAWN BY: DS, WW
CHECKED BY: TP
SCALE: AS NOTED
DATE: NOV 2025
JOB NO.: B614

TITLE: **DEWATERING & CCC MECH PLAN**

JOB: TOWN OF JEROME WASTEWATER TREATMENT PLANT — YAVAPAI CO. AZ

100% ISSUED FOR BID

PREPARED BY:
TAYLOR B. PIERCE R.C.E 70097 DATE

PACE
Advanced Water Engineering
8723 E. VIA DE VENTURA, SUITE 290 | SCOTTSDALE, CA 85258
P: (480) 991-3995 | www.pacewater.com

SHEET
M4.0
38 OF 99 SHEETS

JOB NO. B614

W:\B614\Engineering\B614-30sheets\B614 - M4.0 CCC MECH PLAN AND SECTIONS.dwg - Tab: PLAN VIEW - by reddington on 03/02/26 at 8:58:43 AM

CONSTRUCTION NOTES:

1. INSTALL CONCRETE CHLORINE CONTACT CHANNEL PER STRUCTURAL SHT S1.5.
2. INSTALL TABLET EROSION CHLORINATION EQUIPMENT.
3. INSTALL TABLET EROSION DE-CHLORINATION EQUIPMENT.
4. INSTALL SOLID METAL GRATING WALKWAY PER SPECIFICATION 05 53 00.
5. INSTALL UPWARD WEIR GATE PER SPECIFICATION 40 0513.53.
6. INSTALL 6" FLOW METER.
7. INSTALL 6" ACTUATED BUTTERFLY VALVE.
8. GROUT FILL & SLOPE TO INVERT.
9. INSTALL 6" D.I. PIPE.
10. INSTALL 6" - 90° D.I. BEND.
11. INSTALL PIPE SUPPORTS PER DETAIL A SHEET M8.5.
12. INSTALL 6" - 90° SCH. 40 PVC BEND.
13. INSTALL PVC FLANGE ADAPTER
14. INSTALL 6" SCH. 40 PVC PIPE.
15. INSTALL PIPE PENETRATION PER DETAIL G SHEET M8.4.

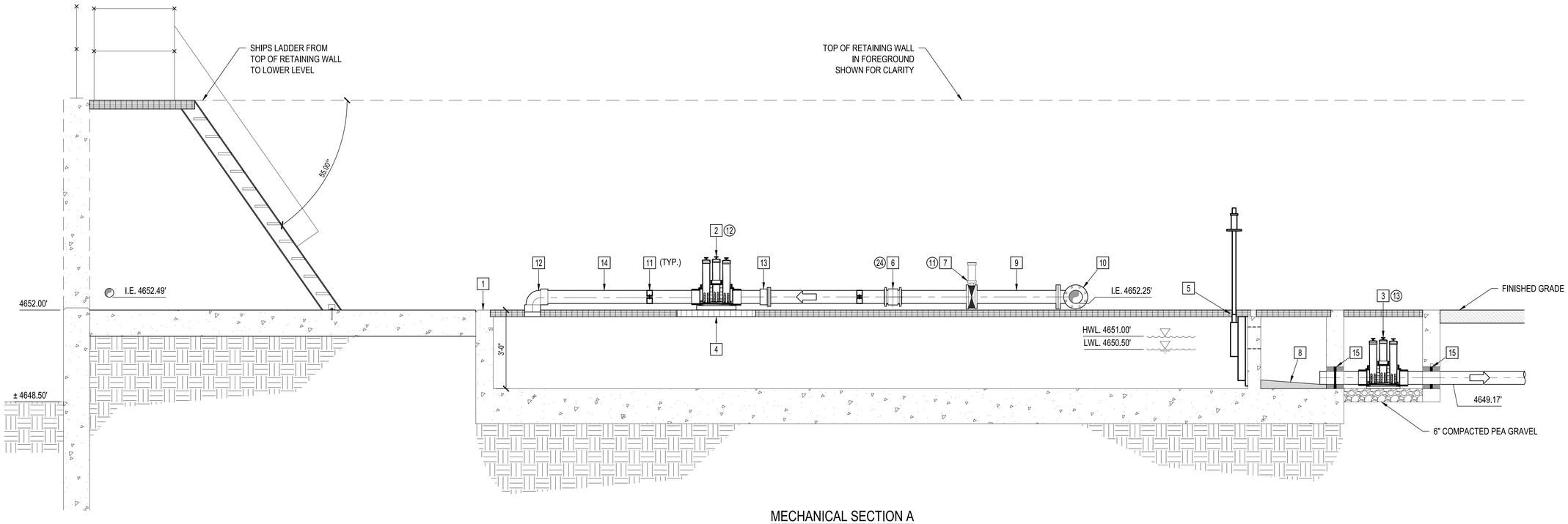

MECHANICAL SECTION A

SCALE: 1/2"=1'-0"

NO	BY	DATE	REVISIONS	DATE	APP.

THESE DRAWINGS ARE THE PROPERTY OF P.A.C.E. AND SHALL NOT BE REPRODUCED IN ANY MANNER NOR BE USED FOR CONSTRUCTION UNLESS STAMPED 'ISSUED FOR CONSTRUCTION'.

Registered Professional Engineer (Civil) CERTIFICATE NO. 70097 TAYLOR B. PIERCE Signed ARIZONA, U.S.A. Expires 12/31/28

PREPARED BY:	PACE
DESIGNED BY:	NE
DRAWN BY:	DS, WW
CHECKED BY:	TP
SCALE:	AS NOTED
DATE	NOV 2025
JOB NO.	B614

TITLE: CHLORINE CONTACT BASIN SECTION

JOB: TOWN OF JEROME WASTEWATER TREATMENT PLANT — YAVAPAI CO. AZ

100% ISSUED FOR BID

PREPARED BY: TAYLOR B. PIERCE R.C.E 70097 DATE

PACE
Advanced Water Engineering
8723 E. Via de Commerce, Suite 104 | Scottsdale, AZ 85258
P: (480) 991-3595 | www.pacewater.com

SHEET **M4.1**

39 OF 99 SHEETS

JOB NO. B614

W:\B614\Engineering\B614-30\sheets\B614 - MM.0 CCC MECH PLAN AND SECTIONS.dwg - Tab: SECTION 1 - by reddington on 03/02/26 at 9:58:43 AM

CONSTRUCTION NOTES:

1. INSTALL CONCRETE CHLORINE CONTACT CHANNEL PER STRUCTURAL SHT S1.5.
2. INSTALL SOLID METAL GRATING WALKWAY PER SPECIFICATION 05 53 00.
3. INSTALL 6" D.I. PIPE.
4. INSTALL SLUDGE BAGGER SYSTEM.
5. INSTALL SHADE STRUCTURE (PER STRUCTURAL SHT S2.10).
6. INSTALL 14 LF TRENCH DRAIN, NEI MODEL R4996-A8. OR ENGINEER APPROVED EQUAL.
7. INSTALL METAL GRATING WALKWAY PER SPECIFICATION 05 53 00.
8. INSTALL 1" PVC CHECK VALVE.
9. INSTALL 1" BALL VALVE.
10. INSTALL 1" - 90° SCH. 80 PVC BEND.
11. INSTALL 2" SCH. 80 PVC PIPE.
12. INSTALL BAGGER SYSTEM CONTROL PANEL.
13. INSTALL POLYMER METERING PUMP.
14. INSTALL DRY POLYMER MAKE-DOWN AND FEED UNIT.
15. INSTALL DEWATERING FEED PUMP.
16. INSTALL 3" - 90° SCH. 80 PVC BEND.
17. INSTALL 3" SCH. 80 PVC PIPE.
18. INSTALL 3" SCH.80 PVC TEE.
19. INSTALL PVC CAP.
20. RETAINING WALL, PER STRUCTURAL PLANS
21. INSTALL 30" ALUMINUM STEP-UP STAIRCASE.
22. INSTALL 2" - 90° SCH. 80 PVC BEND.
23. PIPE PENETRATION PER G SHEET M8.4.

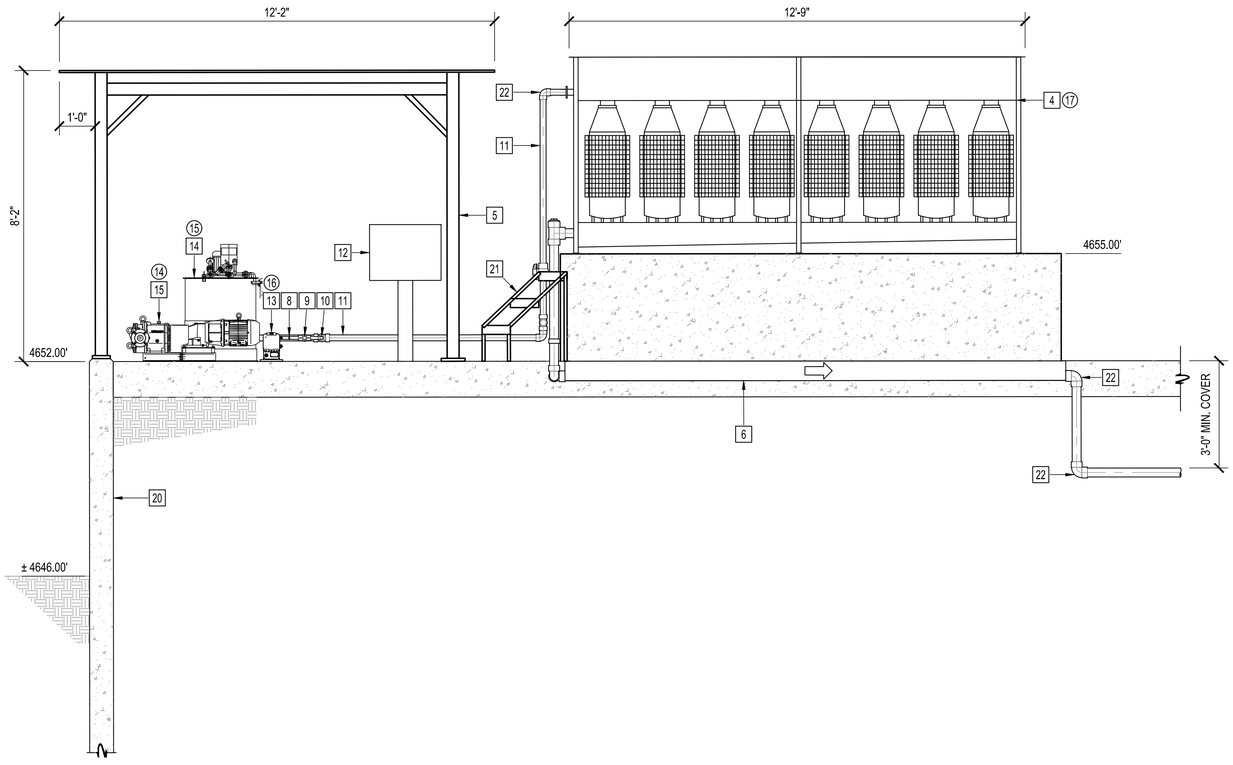

MECHANICAL SECTION B
SCALE: 1/2"=1'-0"

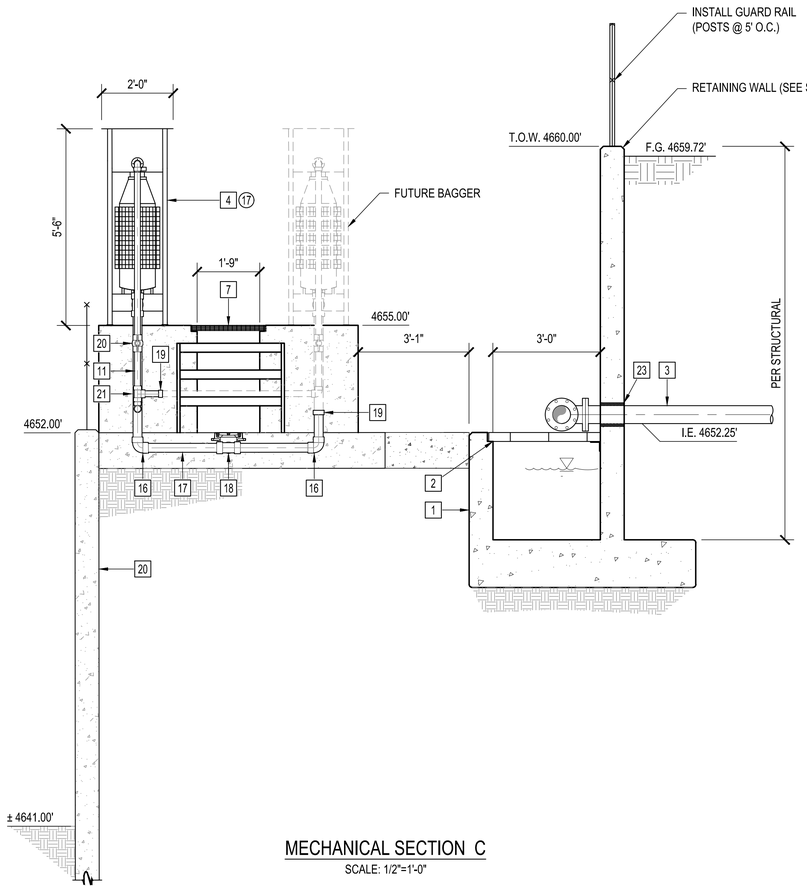

MECHANICAL SECTION C
SCALE: 1/2"=1'-0"

NO	BY	DATE	REVISIONS	DATE	APP.

Registered Professional Engineer (Civil) CERTIFICATE NO. 70097 Timothy B. Pierce Signed 12/31/25 ARIZONA U.S.A. Expires 12/31/28

THESE DRAWINGS ARE THE PROPERTY OF P.A.C.E. AND SHALL NOT BE REPRODUCED IN ANY MANNER NOR BE USED FOR CONSTRUCTION UNLESS STAMPED 'ISSUED FOR CONSTRUCTION'.

PREPARED BY: PACE
DESIGNED BY: NE
DRAWN BY: DS, WW
CHECKED BY: TP
SCALE: AS NOTED
DATE: NOV 2025
JOB NO.: B614

TITLE: **DEWATERING SECTION**

JOB: TOWN OF JEROME WASTEWATER TREATMENT PLANT — YAVAPAI CO. AZ

100% ISSUED FOR BID

PREPARED BY: TAYLOR B. PIERCE — R.C.E 70097 — DATE

PACE
Advanced Water Engineering
8723 E. VIA de VENTURA, SUITE 240 | SCOTTSDALE, CA 85258
P: (480) 991-3995 | www.pacewater.com

SHEET **M4.2**
40 OF 99 SHEETS

JOB NO. B614

W:\B614\Engineering\B614-30sheets\B614 - M4.0 CCC MECH PLAN AND SECTIONS.dwg - Tab: SECTION 2 - by reddington on 03/02/26 at 9:58:43 AM

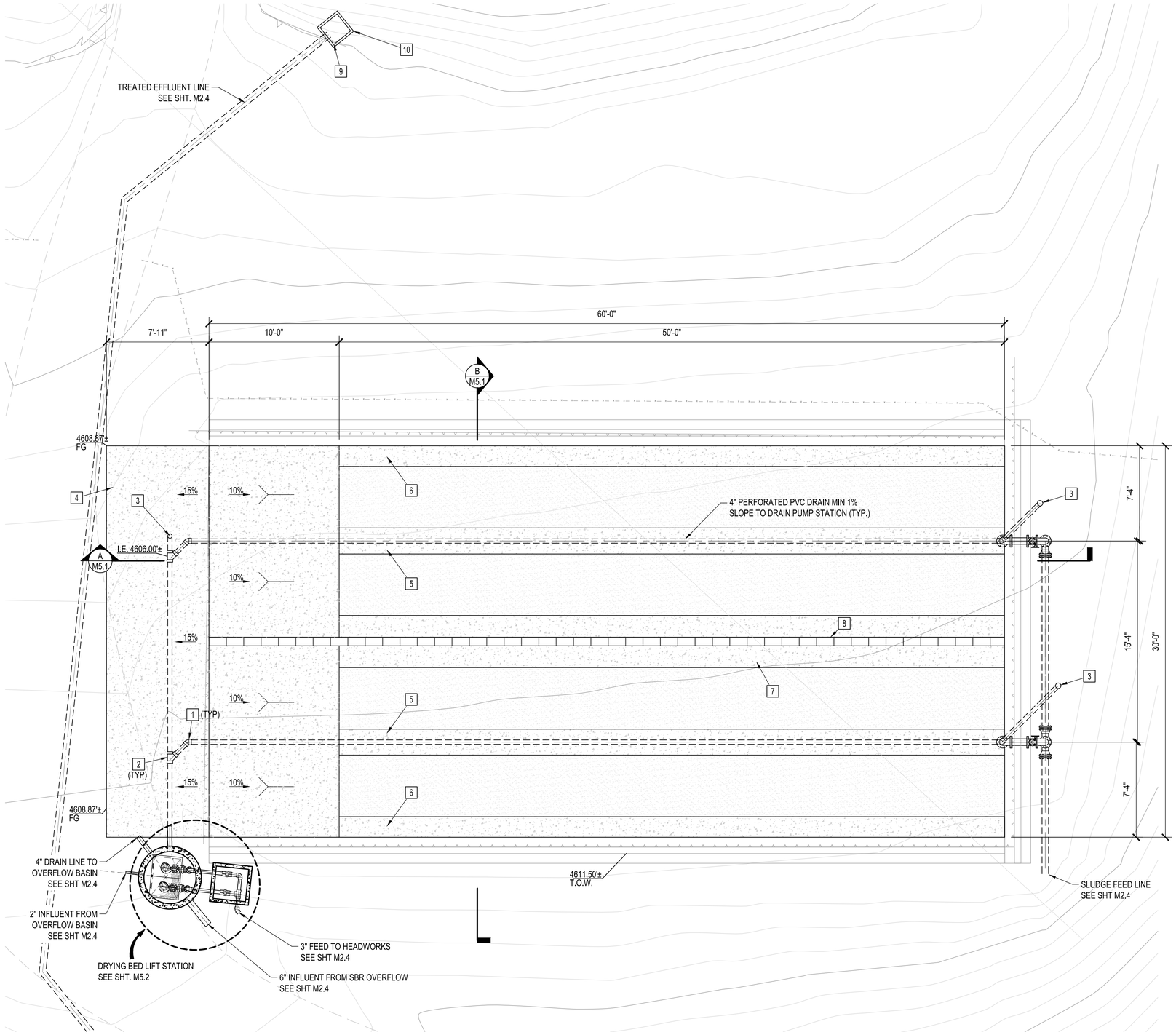

SLUDGE DRYING BED
PLAN VIEW
SCALE: 1/4" = 1'-0"

CONSTRUCTION NOTES:

1. INSTALL 4" - 45° SDR35 PVC BEND.
2. INSTALL 4"x4" SDR35 PVC WYE.
3. INSTALL 4" CLEANOUT PER DETAIL I SHEET M8.3.
4. INSTALL 8" THICK CONCRETE RAMP W #5 AT 12" O.C. EACH WAY, BOTTOM OVER 6" ABC.
5. INSTALL 2'-0" WIDE x8" THICK CONCRETE SLAB W/ 3 #5 CONT. AND #5 AT 16" O.C. TRANS., BOTTOM. TYPICAL OF 2.
6. INSTALL 1'-7" WIDE x8" THICK CONCRETE SLAB W/ 2 #5 CONT. AND #5 AT 16" O.C. TRANS., BOTTOM. TYPICAL OF 2.
7. INSTALL 3'-10" WIDE x12" THICK CONCRETE SLAB W/ 6 #5 CONT. AND #5 AT 16" O.C. TRANS., BOTTOM.
8. INSTALL CMU BLOCK WALL, #5 VERTICAL W/ DOWEL INTO CONCRETE PAD AT 48" O.C. ALTERNATING, GROUT WALL SOLID.
9. INSTALL AUTOSAMPLER, PROVIDED BY TOWN.
10. INSTALL 2'x2'x2' CATCH BASIN TYPE G W/ SINGLE GRATE AND 6" INLET/OUTLET.

NOTES:

1. SLOPE GRADE MIN. 5:1 AWAY AS NEEDED AROUND ENTIRE PERIMETER.
2. PROTECT IN PLACE EXISTING ROADWAY BARRIERS.

NO	BY	DATE	REVISIONS	DATE	APP.

Registered Professional Engineer (Civil)
CERTIFICATE NO. 70097
TAYLOR B. PIERCE
Signed
ARIZONA, U.S.A.
Expires 12/31/28

PREPARED BY: PACE
DESIGNED BY: NE
DRAWN BY: DS, WW
CHECKED BY: TP
SCALE: AS NOTED
DATE: NOV 2025
JOB NO. B614

THESE DRAWINGS ARE THE PROPERTY OF P.A.C.E. AND SHALL NOT BE REPRODUCED IN ANY MANNER NOR BE USED FOR CONSTRUCTION UNLESS STAMPED 'ISSUED FOR CONSTRUCTION'.

TITLE
SLUDGE DRYING BEDS PLAN

100% ISSUED FOR BID

JOB
TOWN OF JEROME
WASTEWATER
TREATMENT PLANT
YAVAPAI CO. AZ

PREPARED BY:
TAYLOR B. PIERCE R.C.E 70097 DATE
PACE
Advanced Water Engineering
8723 E. Via de Commercio, Suite 1, Scottsdale, AZ 85258
P: (480) 991-3995 | www.pacewater.com

SHEET
M5.0
41 OF 99 SHEETS

JOB NO. B614

W:\B614\Engineering\B614-30\sheets\B614 - M5.0 SLUDGE DRYING BEDS PLAN.dwg - Tab: M5.0 - by reddington on 11/19/25 at 3:14:09 PM

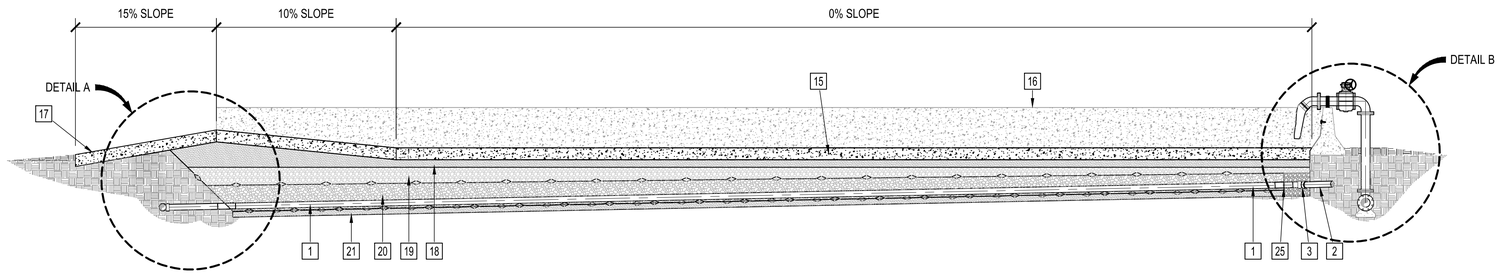

SLUDGE DRYING BED
SECTION - A
SCALE: 1/4" = 1'-0"

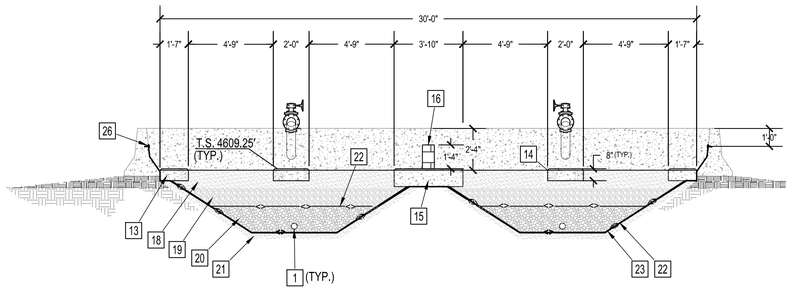

SLUDGE DRYING BED
SECTION - B
SCALE: 1/4" = 1'-0"

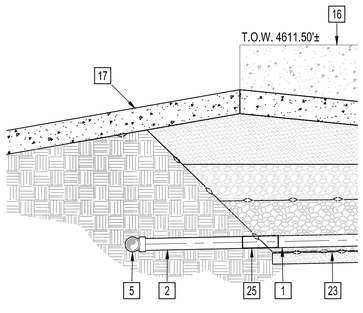

SLUDGE DRYING BED
DETAIL - A
SCALE: 1/2" = 1'-0"

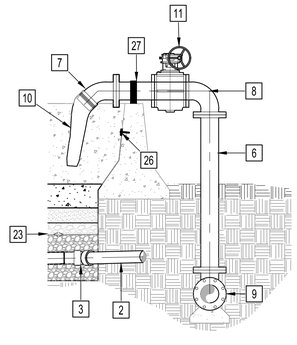

SLUDGE DRYING BED
DETAIL - B
SCALE: 1/2" = 1'-0"

CONSTRUCTION NOTES:

1. INSTALL 4" SDR 35 PVC PERFORATED PIPE.
2. INSTALL 4" SDR 35 PVC PIPE.
3. INSTALL 4" - 45° SDR35 PVC BEND.
4. INSTALL 4" - 90° LONG RADIUS SDR 35 PVC BEND.
5. INSTALL 4" SDR 35 PVC WYE.
6. INSTALL 6" D.I. PIPE.
7. INSTALL 6" - 45° D.I. BEND (FLG'D).
8. INSTALL 6" - 90° D.I. BEND (FLG'D).
9. INSTALL 6"x6"x6" D.I. TEE MJ x FLG'D CONNECTIONS W/ THRUST BLOCK PER DETAIL C SHEET M8.4.
10. INSTALL 6" RUBBER SKIRT W/ SS CLAMPS.
11. INSTALL 6" PLUG VALVE W/ HANDWHEEL.
12. INSTALL 4" CLEANOUT PER DETAIL I SHEET M8.3.
13. INSTALL 1'-7" WIDE x8" THICK CONCRETE SLAB W/ 2 #5 CONT. AND #5 AT 16" O.C. TRANS., BOTTOM. TYPICAL OF 2.
14. INSTALL 2'-0" WIDE x8" THICK CONCRETE SLAB W/ 3 #5 CONT. AND #5 AT 16" O.C. TRANS., BOTTOM. TYPICAL OF 2.
15. INSTALL 3'-10" WIDE x12" THICK CONCRETE SLAB W/ 6 #5 CONT. AND #5 AT 16" O.C. TRANS., BOTTOM.
16. INSTALL CMU BLOCK WALL, #5 VERTICAL W/ DOWEL INTO CONCRETE PAD AT 48" O.C. ALTERNATING, GROUT WALL SOLID.
17. INSTALL 8" THICK CONCRETE RAMP W #5 AT 12" O.C. EACH WAY, BOTTOM OVER 6" ABC.
18. INSTALL 12" SAND LAYER.
19. INSTALL 4-8 mm FINE GRAVEL.
20. INSTALL 1'-6" DEEP ¾" CRUSHED ROCK.
21. INSTALL 4" GRANULAR SAND LAYER.
22. INSTALL 100 mm GEOTEXTILE FABRIC PER SPECS.
23. INSTALL FLEXIBLE POLYPROPYLENE LINER PER SPECS.
24. INSTALL ANCHOR TRENCH PER DETAIL D SHEET M8.3.
25. INSTALL PIPE BOOT PER LINER MANUFACTURER RECOMMENDATIONS AND DETAIL E SHEET M8.3.
26. INSTALL HDPE LINER ANCHOR BOLT, ANCHOR TO EXISTING WALLS PER DETAIL C SHEET M8.3.
27. PIPE SUPPORT / STRAP

NOTES:

1. SLOPE GRADE MIN. 5:1 AWAY AS NEEDED AROUND ENTIRE PERIMETER.
2. PROTECT IN PLACE EXISTING ROADWAY BARRIERS.

NO	BY	DATE	REVISIONS	DATE	APP.

THESE DRAWINGS ARE THE PROPERTY OF P.A.C.E. AND SHALL NOT BE REPRODUCED IN ANY MANNER NOR BE USED FOR CONSTRUCTION UNLESS STAMPED 'ISSUED FOR CONSTRUCTION'.

Registered Professional Engineer (Civil)
CERTIFICATE NO. 70097
Taylor B. Pierce
Signed
ARIZONA, U.S.A.
Expires 12/31/28

PREPARED BY: PACE
DESIGNED BY: NE
DRAWN BY: DS, WW
CHECKED BY: TP
SCALE: AS NOTED
DATE: NOV 2025
JOB NO.: B614

TITLE: SLUDGE DRYING BEDS SECTIONS

100% ISSUED FOR BID

JOB: TOWN OF JEROME WASTEWATER TREATMENT PLANT — YAVAPAI CO. AZ

PREPARED BY:
PACE
Advanced Water Engineering
8723 E. VIA DE COMMERCIO, 3RD FLOOR, SCOTTSDALE, CA 85258
P.: (480) 991-3595 | www.pacewater.com
TAYLOR B. PIERCE R.C.E. 70097 DATE

SHEET
M5.1
42 OF 99 SHEETS

JOB NO. B614

W:\B614\Engineering\B614-3\Sheets\B614 - M5.0 SLUDGE DRYING BEDS PLAN.dwg - Tab: M5.1 - by nseddington on 11/18/25 at 3:14:09 PM

CONSTRUCTION NOTES:

1. INSTALL 3" SCH. 80 PVC PIPE.
2. INSTALL 3" - 45° SCH. 80 PVC BEND.
3. INSTALL 3" - 90° DIP BEND.
4. INSTALL 3" SCH. 80 PVC TEE.
5. INSTALL 3" DIP PLUG VALVE.
6. INSTALL 3" DIP SWING CHECK VALVE.
7. INSTALL S.S PIPE SUPPORT PER DETAIL A SHEET M8.5.
8. INSTALL SUBMERSIBLE PUMP.
9. INSTALL 24"x36" ACCESS HATCH.
10. INSTALL LEVEL FLOAT ASSEMBLY AND SUPPORT STEM PER MANUFACTURER RECOMMENDATIONS.
11. INSTALL PUMP GUIDE RAIL SYSTEM PER MANUFACTURER RECOMMENDATIONS.
12. INSTALL PIPE PENETRATION PER DETAIL G SHEET M8.4.
13. INSTALL PRECAST 3' x 3' x 2' CONCRETE VAULT W/ ACCESS HATCH.
14. INSTALL 3" S.S. PIPE WELL AIR VENT PIPE W/ #20 MESH BUG SCREEN.
15. INSTALL 3+ PVC FLANGE ADAPTER.
16. INSTALL 3" - 90° DIP BEND.
17. INSTALL 3" DIP.
18. INSTALL PVC FLANGE ADAPTER.
19. COAT LIFT STATION AND PIPING FOR SEVERE H_2S CORROSION PER COATING SPECIFICATIONS
20. SUBGRADE PER GEOTECH REPORT

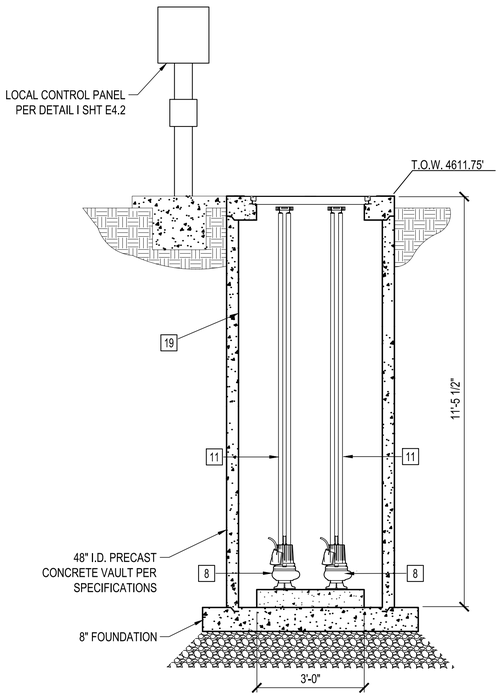

DRYING BED LIFT STATION
SECTIONS
SCALE: 1/2" = 1'-0"

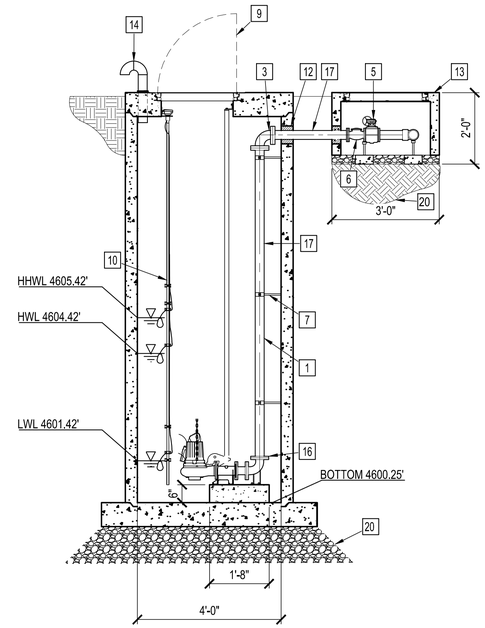

SEE SHEET M2.4 FOR
PIPING CONTINUATIONS

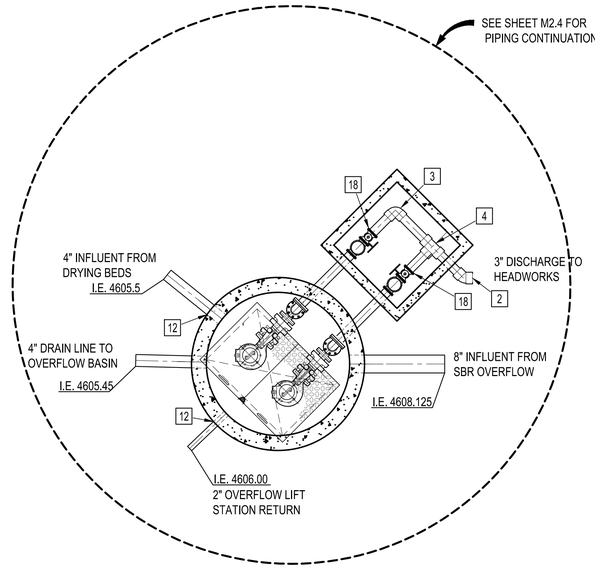

DRYING BED LIFT STATION
PLAN VIEW
SCALE: 1/2" = 1'-0"

THESE DRAWINGS ARE THE PROPERTY OF P.A.C.E. AND SHALL NOT BE REPRODUCED IN ANY MANNER NOR BE USED FOR CONSTRUCTION UNLESS STAMPED 'ISSUED FOR CONSTRUCTION'.

NO	BY	DATE	REVISIONS	DATE	APP.

Registered Professional Engineer (Civil)
CERTIFICATE NO. 70097
TAYLOR B. PIERCE
Signed
ARIZONA, U.S.A.
Expires 12/31/28

PREPARED BY: PACE
DESIGNED BY: NE
DRAWN BY: DS, WW
CHECKED BY: TP
SCALE: AS NOTED
DATE: NOV 2025
JOB NO.: B614

TITLE: DRYING BED LIFT STATION SECTIONS

JOB: TOWN OF JEROME
WASTEWATER
TREATMENT PLANT
YAVAPAI CO. AZ

100% ISSUED FOR BID

PREPARED BY:
PACE
Advanced Water Engineering
8723 E. VIA de COMMERCIO, SUITE 1-A, SCOTTSDALE, CA 85258
P: (408) 991-3595 | w www.pacewater.com
TAYLOR B. PIERCE R.C.E 70097 DATE

SHEET
M5.2
43 OF 99 SHEETS

JOB NO. B614

W:\B614\Engineering\B614-3\Sheets\B614 - M5.0 SLUDGE DRYING BEDS PLAN.dwg - Tab: M5.2 - by noddington on 11/19/25 at 3:14:09 PM

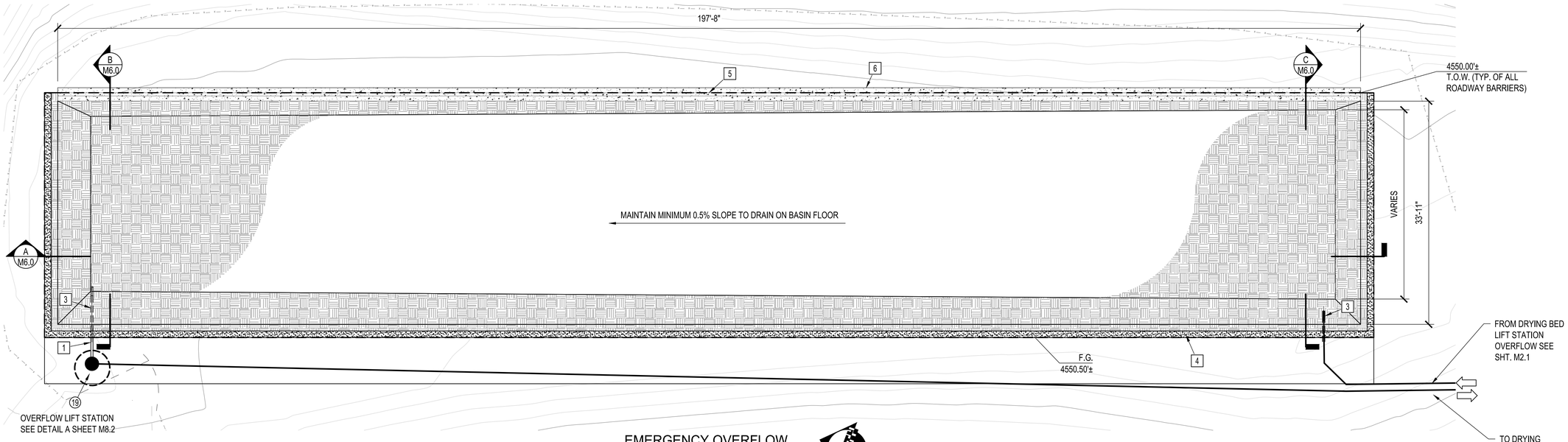

EMERGENCY OVERFLOW
BASIN PLAN VIEW
SCALE: 1/8" = 1'-0"

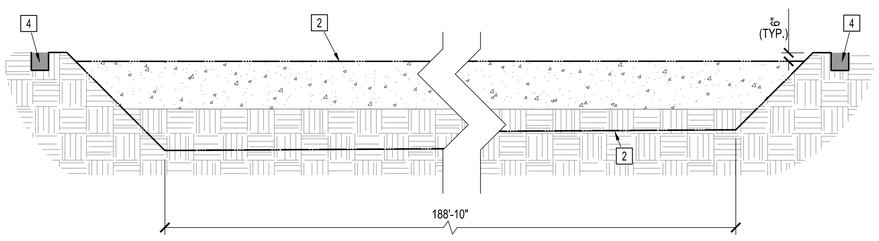

EMERGENCY OVERFLOW BASIN
SECTION - A
SCALE: 1/4" = 1'-0"

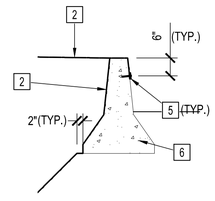

EMERGENCY OVERFLOW BASIN
DETAIL - A
SCALE: 1/2" = 1'-0"

CONSTRUCTION NOTES:

1. INSTALL 4" SDR 35 PVC PIPE.
2. INSTALL HDPE LINER PER SPECIFICATION 31 05 19.16.
3. INSTALL PIPE BOOT PER LINER MANUFACTURER RECOMMENDATIONS AND DETAIL E SHEET M8.3.
4. INSTALL ANCHOR TRENCH PER DETAIL D SHEET M8.3.
5. INSTALL HDPE LINER ANCHOR BOLT, ANCHOR TO EXISTING WALLS PER DETAIL C. SHEET M8.3.
6. PROTECT IN PLACE EXISTING ROADWAY BARRIERS.

NOTES:

1. GRADE ALL BASIN WALLS WITH 1:1 SLOPE TO BASIN FLOOR.
2. SLOPE GRADE MIN 5:1 AWAY AS NEEDED AROUND ENTIRE PERIMETER.
3. CONTRACTOR TO RELOCATE EXISTING ROADWAY BARRIERS FROM ABANDONED BASIN AS NEEDED.

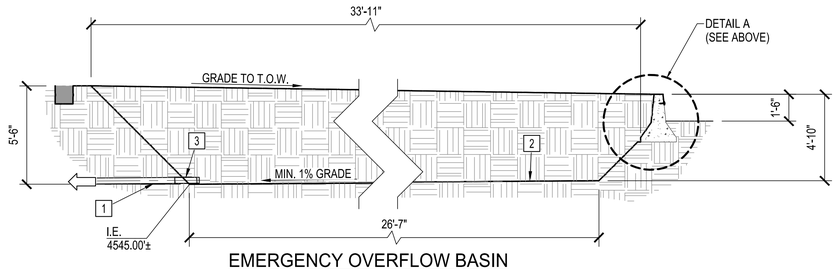

EMERGENCY OVERFLOW BASIN
SECTION - B
SCALE: 1/4" = 1'-0"

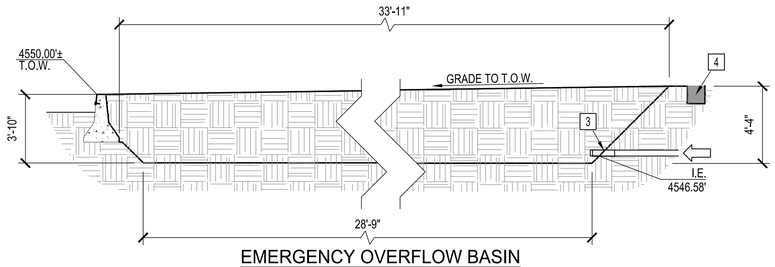

EMERGENCY OVERFLOW BASIN
SECTION - C
SCALE: 1/4" = 1'-0"

NO	BY	DATE	REVISIONS	DATE	APP.

THESE DRAWINGS ARE THE PROPERTY OF P.A.C.E. AND SHALL NOT BE REPRODUCED IN ANY MANNER NOR BE USED FOR CONSTRUCTION UNLESS STAMPED 'ISSUED FOR CONSTRUCTION'.

Registered Professional Engineer (Civil)
CERTIFICATE NO. 70097
TAYLOR B. PIERCE
Signed
ARIZONA, U.S.A.
Expires 12/31/28

PREPARED BY: PACE
DESIGNED BY: NE
DRAWN BY: DS, WW
CHECKED BY: TP
SCALE: AS NOTED
DATE: NOV 2025
JOB NO.: B614

TITLE: EMERGENCY OVERFLOW BASIN PLAN AND SECTIONS

JOB: TOWN OF JEROME WASTEWATER TREATMENT PLANT — YAVAPAI CO. AZ

100% ISSUED FOR BID

PREPARED BY: TAYLOR B. PIERCE

PACE
Advanced Water Engineering
8723 E. VIA DE VENTURA, SUITE A-100, SCOTTSDALE, CA 85258
P: (480) 991-3995 | www.pacewater.com
R.C.E 70097 DATE

SHEET
M6.0
44 OF 99 SHEETS

JOB NO. B614

W:\B614\Engineering\B614-30sheets\B614 - M6.0 EMERGENCY OVERFLOW STORAGE PLAN.dwg - Tab: M6.0 - by reddington on 11/19/25 at 2:37:31 PM

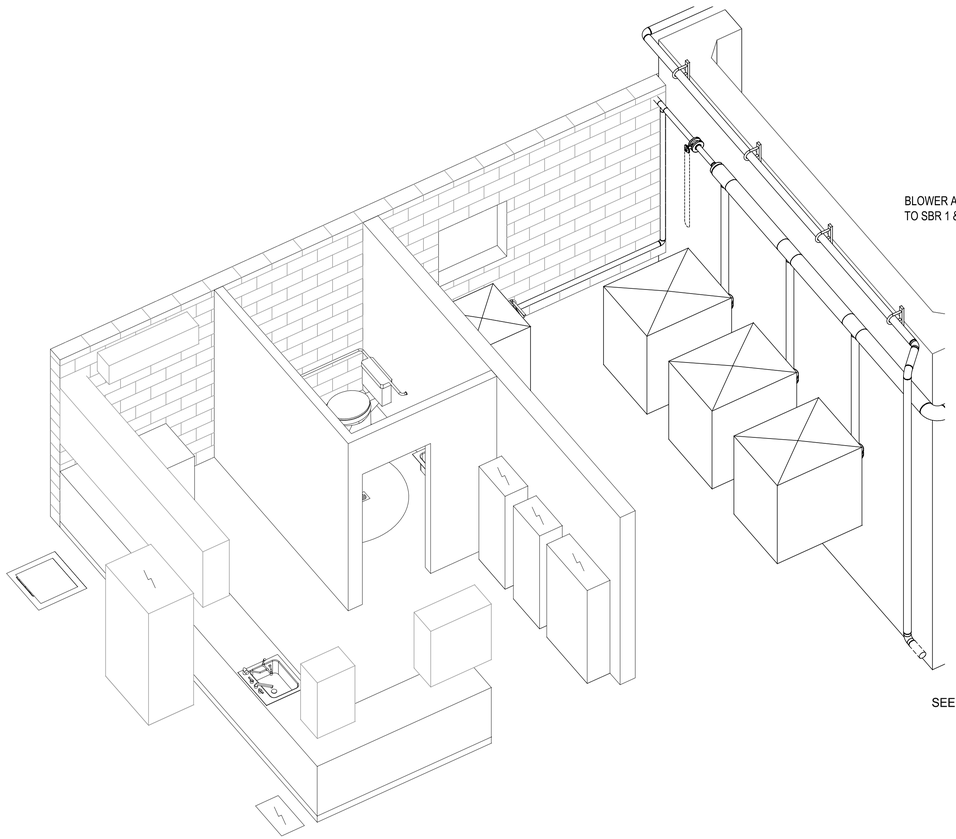

ISOMETRIC VIEW - NE
SCALE: N.T.S.

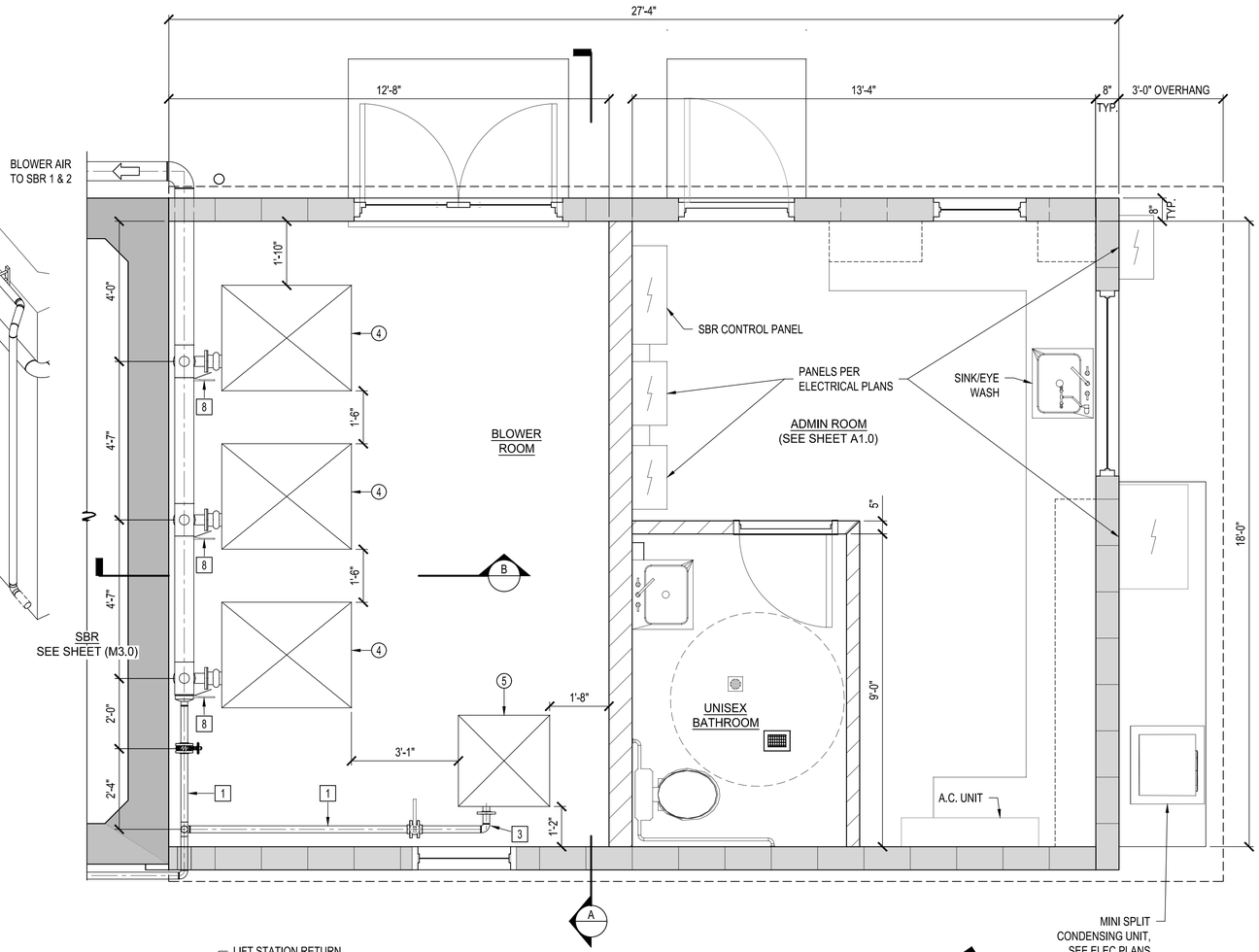

MECHANICAL PLAN - ABOVE
SCALE: 1/2" = 1'-0"

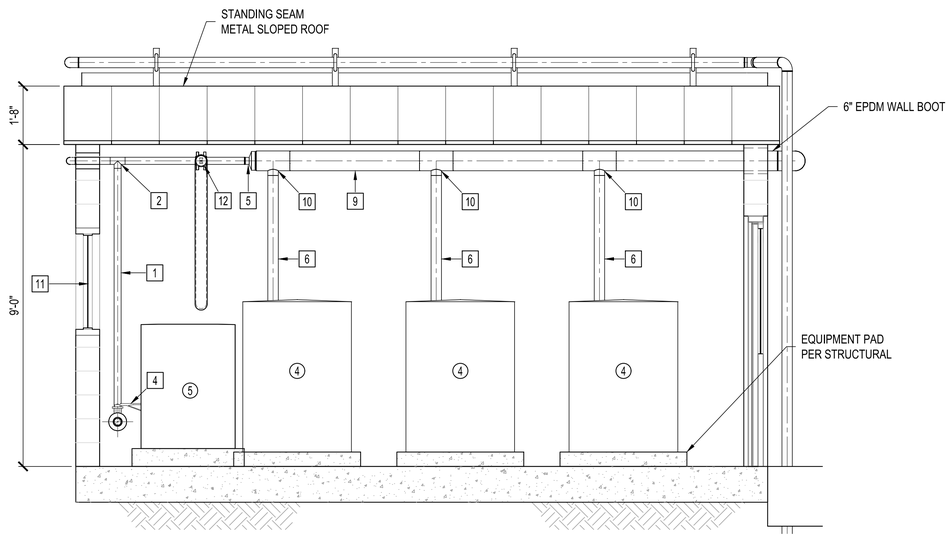

SECTION-A
SCALE: 1/2" = 1'-0"

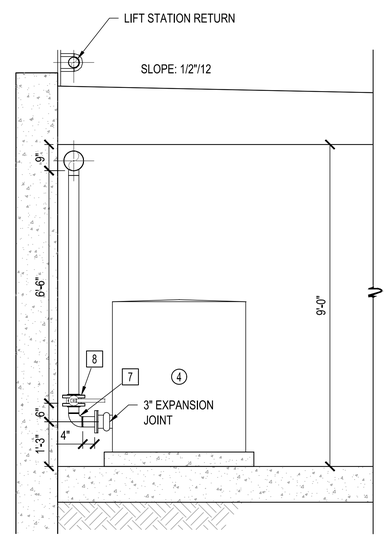

SECTION-B
SCALE: 1/2" = 1'-0"

CONSTRUCTION NOTES:

1. INSTALL 2" SCH. 10 CARBON STEEL PIPE.
2. INSTALL 2" SCH. 10 CARBON STEEL TEE.
3. INSTALL 2" - 90° SCH. 10 CARBON STEEL BEND
4. INSTALL 2" BUTTERFLY VALVE.
5. INSTALL 6"x2" SCH. 10 CARBON STEEL REDUCER.
6. INSTALL 3" SCH. 10 CARBON STEEL PIPE.
7. INSTALL 3" - 90° SCH. 10 CARBON STEEL BEND.
8. INSTALL 3" BUTTERFLY VALVE.
9. INSTALL 6" SCH. 10 CARBON STEEL PIPE.
10. INSTALL 6"x3"x6" SCH. 10 CARBON STEEL TEE.
11. INSTALL 3'x3' ACOUSTICAL LOUVER PER SPECIFICATION 08 9100.
12. INSTALL 2" BUTTERFLY VALVE WITH CHAIN WHEEL

NO	BY	DATE	REVISIONS	DATE	APP.

Registered Professional Engineer (Civil) CERTIFICATE NO. 70097 Signed TAYLOR B. PIERCE ARIZONA, U.S.A. Expires 12/31/28

PREPARED BY: PACE
DESIGNED BY: NE
DRAWN BY: DS, WW
CHECKED BY: TP
SCALE: AS NOTED
DATE: NOV 2025
JOB NO.: B614

THESE DRAWINGS ARE THE PROPERTY OF P.A.C.E. AND SHALL NOT BE REPRODUCED IN ANY MANNER NOR BE USED FOR CONSTRUCTION UNLESS STAMPED 'ISSUED FOR CONSTRUCTION'.

TITLE: **BLOWER OPS PLAN**

JOB: TOWN OF JEROME
WASTEWATER
TREATMENT PLANT
YAVAPAI CO. AZ

100% ISSUED FOR BID

PREPARED BY: PACE
Advanced Water Engineering
8723 E. Vía de Commercio, Suite 2-104 | SCOTTSDALE, CA 85258
P: (408) 991-3595 | www.pacewater.com
TAYLOR B. PIERCE R.C.E 70097 DATE

SHEET
M7.0
45 OF 99 SHEETS

JOB NO. B614

W:\B614-Engineering\B614-03\sheets\B614 - M7.0 BLOWER OPS PLAN AND SECTIONS.dwg - Tab: M7.0 - by reddington on 11/21/25 at 12:21:09 PM

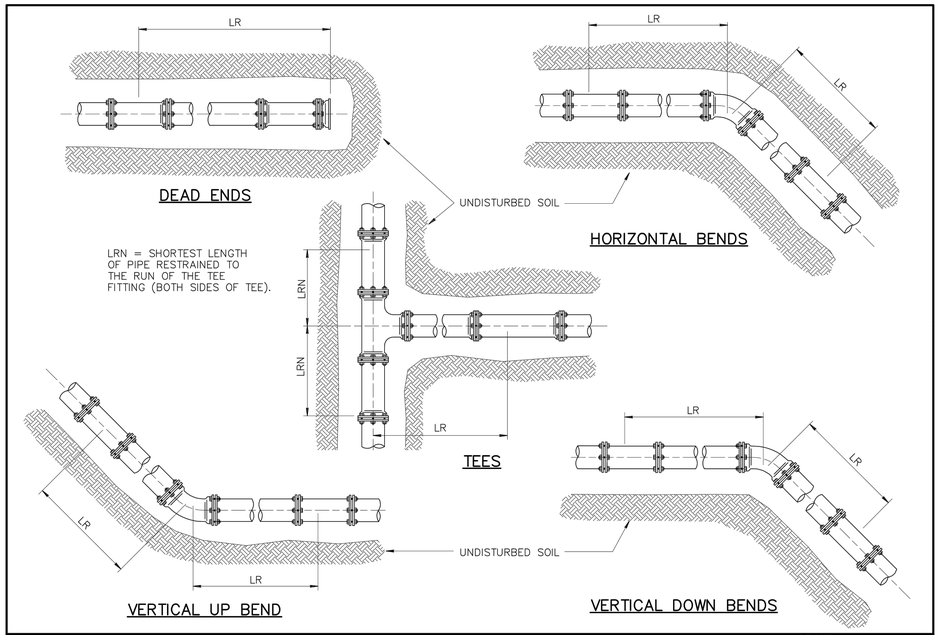

DETAIL NO.	STANDARD DETAIL	JOINT RESTRAINT FOR DUCTILE IRON, POLYETHYLENE WRAPPED DUCTILE IRON AND PVC WATER PIPES	REVISED	DETAIL NO.
303–1	MARICOPA ASSOCIATION of GOVERNMENTS ENGLISH		01–01–2019	303–1

M.A.G. STANDARD DETAIL #303-1

N.T.S. | A

RESTRAINED LENGTHS, LR, FOR DUCTILE IRON PIPE

NOMINAL PIPE SIZE INCHES	HORIZONTAL BENDS			TEES		VERTICAL OFFSETS						DEAD ENDS
						90° BEND FITTINGS		45° BEND FITTINGS		22–1/2° BEND FITTINGS		
	90°	45°	22–1/2°	LRN=0'	LRN=10'	DOWN BEND	UP BEND	DOWN BEND	UP BEND	DOWN BEND	UP BEND	
4	18	7	4	30	8	31	18	13	7	6	3	31
6	25	10	5	43	20	44	25	18	10	9	5	44
8	32	13	6	56	34	58	32	24	13	11	6	58
10	38	16	8	68	45	69	38	29	16	14	8	69
12	45	19	9	80	57	81	45	34	19	16	9	81
14	51	21	10	91	68	92	51	38	21	18	10	92
16	57	24	11	103	79	104	57	43	24	21	11	104
18	62	26	12	113	90	115	62	48	26	23	12	115
20	68	28	14	125	100	126	68	52	28	25	14	126
24	79	33	16	145	121	147	79	61	33	29	16	147

RESTRAINED LENGTHS, LR, FOR DUCTILE IRON WITH POLYETHYLENE WRAP AND PVC PIPE

NOMINAL PIPE SIZE INCHES	HORIZONTAL BENDS			TEES		VERTICAL OFFSETS						DEAD ENDS
						90° BEND FITTINGS		45° BEND FITTINGS		22–1/2° BEND FITTINGS		
	90°	45°	22–1/2°	LRN=0'	LRN=10'	DOWN BEND	UP BEND	DOWN BEND	UP BEND	DOWN BEND	UP BEND	
4	26	11	5	69	18	72	26	30	11	14	5	72
6	36	15	7	99	47	102	36	42	15	20	7	102
8	47	19	9	130	78	133	47	55	19	26	9	133
10	56	23	11	157	103	159	56	66	23	32	11	159
12	65	27	13	185	131	187	65	77	27	37	13	187
14	74	31	15	211	156	214	74	89	31	42	15	214
16	82	34	16	238	183	241	82	100	34	48	16	241
18	90	37	18	263	207	266	90	110	38	53	18	266
20	98	41	20	289	233	292	98	121	41	58	20	292
24	113	47	22	337	280	340	113	141	47	68	22	340

NOTES:

1. ALL JOINTS WITHIN THE SPECIFIED LENGTH LR MUST BE RESTRAINED. ALL LENGTHS ARE GIVEN IN FEET.
2. THE MAXIMUM TEST PRESSURE SHALL NOT EXCEED 200 PSI
3. THE MINIMUM DEPTH OF BURY SHALL BE 3' TO TOP OF PIPE.
4. RESTRAINED LENGTHS MAY BE REDUCED WHEN SUPPORTED BY ENGINEERING CALCULATIONS.

DETAIL NO.	STANDARD DETAIL	JOINT RESTRAINT FOR DUCTILE IRON, POLYETHYLENE WRAPPED DUCTILE IRON AND PVC WATER PIPES	REVISED	DETAIL NO.
303–2	MARICOPA ASSOCIATION of GOVERNMENTS ENGLISH		01–01–2019	303–2

M.A.G. STANDARD DETAIL #303-2

N.T.S. | B

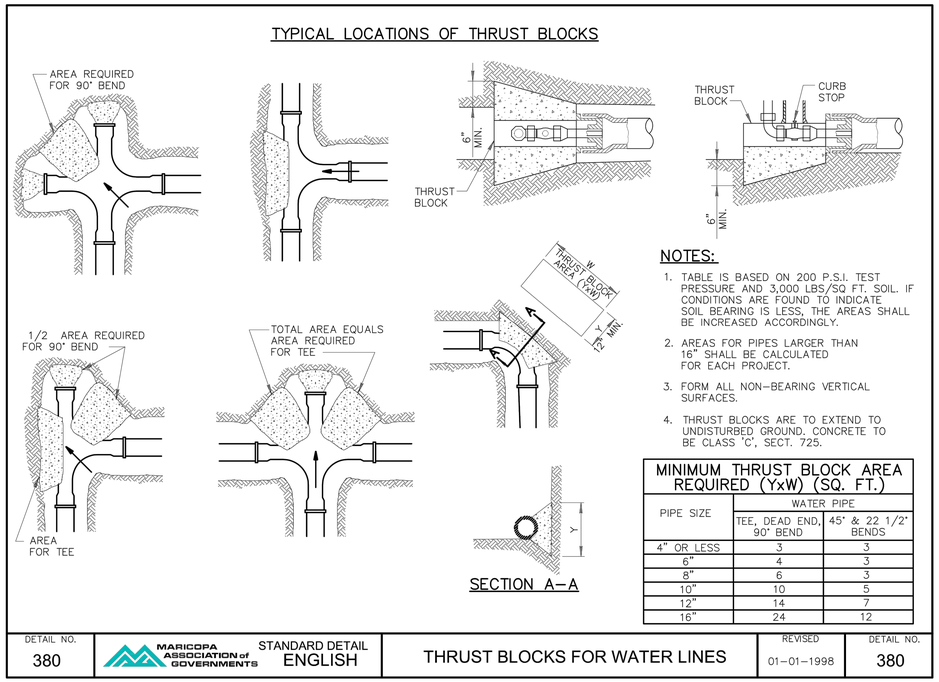

NOTES:

1. TABLE IS BASED ON 200 P.S.I. TEST PRESSURE AND 3,000 LBS/SQ FT. SOIL. IF CONDITIONS ARE FOUND TO INDICATE SOIL BEARING IS LESS, THE AREAS SHALL BE INCREASED ACCORDINGLY.
2. AREAS FOR PIPES LARGER THAN 16" SHALL BE CALCULATED FOR EACH PROJECT.
3. FORM ALL NON–BEARING VERTICAL SURFACES.
4. THRUST BLOCKS ARE TO EXTEND TO UNDISTURBED GROUND. CONCRETE TO BE CLASS 'C', SECT. 725.

MINIMUM THRUST BLOCK AREA REQUIRED (YxW) (SQ. FT.)		
PIPE SIZE	WATER PIPE	
	TEE, DEAD END, 90° BEND	45° & 22 1/2° BENDS
4" OR LESS	3	3
6"	4	3
8"	6	3
10"	10	5
12"	14	7
16"	24	12

DETAIL NO.	STANDARD DETAIL	THRUST BLOCKS FOR WATER LINES	REVISED	DETAIL NO.
380	MARICOPA ASSOCIATION of GOVERNMENTS ENGLISH		01–01–1998	380

M.A.G. STANDARD DETAIL #380

N.T.S. | C

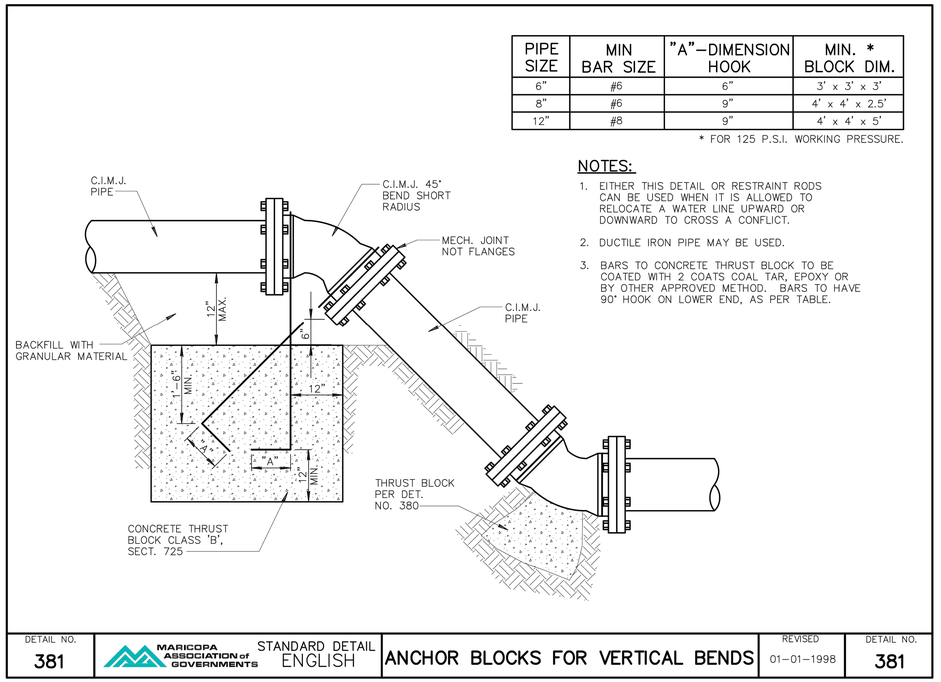

PIPE SIZE	MIN BAR SIZE	"A"–DIMENSION HOOK	MIN. * BLOCK DIM.
6"	#6	6"	3' x 3' x 3'
8"	#6	9"	4' x 4' x 2.5'
12"	#8	9"	4' x 4' x 5'

* FOR 125 P.S.I. WORKING PRESSURE.

NOTES:

1. EITHER THIS DETAIL OR RESTRAINT RODS CAN BE USED WHEN IT IS ALLOWED TO RELOCATE A WATER LINE UPWARD OR DOWNWARD TO CROSS A CONFLICT.
2. DUCTILE IRON PIPE MAY BE USED.
3. BARS TO CONCRETE THRUST BLOCK TO BE COATED WITH 2 COATS COAL TAR, EPOXY OR BY OTHER APPROVED METHOD. BARS TO HAVE 90° HOOK ON LOWER END, AS PER TABLE.

DETAIL NO.	STANDARD DETAIL	ANCHOR BLOCKS FOR VERTICAL BENDS	REVISED	DETAIL NO.
381	MARICOPA ASSOCIATION of GOVERNMENTS ENGLISH		01–01–1998	381

M.A.G. STANDARD DETAIL #381

N.T.S. | D

NO	BY	DATE	REVISIONS	DATE	APP.

Registered Professional Engineer (Civil) CERTIFICATE NO. 70097 Timothy B. Pace Signed ARIZONA, U.S.A. Expires 12/31/28

PREPARED BY: PACE
DESIGNED BY: NE
DRAWN BY: DS, WW
CHECKED BY: TP
SCALE: AS NOTED
DATE: NOV 2025
JOB NO. B614

THESE DRAWINGS ARE THE PROPERTY OF P.A.C.E. AND SHALL NOT BE REPRODUCED IN ANY MANNER NOR BE USED FOR CONSTRUCTION UNLESS STAMPED 'ISSUED FOR CONSTRUCTION'.

TITLE: MECHANICAL DETAILS I

JOB: TOWN OF JEROME WASTEWATER TREATMENT PLANT — YAVAPAI CO. AZ

100% ISSUED FOR BID

PACE — Advanced Water Engineering — 8723 E. Via de Ventura, Suite A-110, SCOTTSDALE, CA 85258 — P: (480) 991-3595 | www.pacewater.com

PREPARED BY: TAYLOR B. PIERCE R.C.E 70097 DATE

SHEET M8.0 — 46 OF 99 SHEETS

JOB NO. B614

W:\B614\Engineering\B614-30\sheets\B614 - M8.0 MECHANICAL DETAILS.dwg - Tab: M8.0 - by maddington on 02/23/26 at 12:41:49 PM

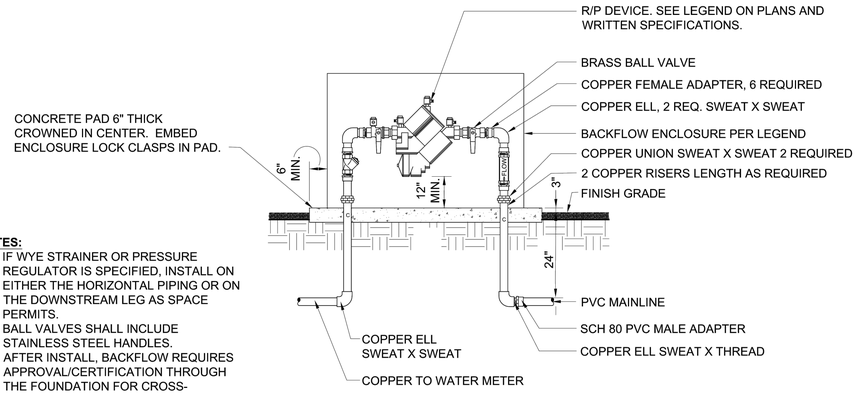

NOTES:

1. IF WYE STRAINER OR PRESSURE REGULATOR IS SPECIFIED, INSTALL ON EITHER THE HORIZONTAL PIPING OR ON THE DOWNSTREAM LEG AS SPACE PERMITS.
2. BALL VALVES SHALL INCLUDE STAINLESS STEEL HANDLES.
3. AFTER INSTALL, BACKFLOW REQUIRES APPROVAL/CERTIFICATION THROUGH THE FOUNDATION FOR CROSS-CONNECTION CONTROL AND HYDRAULIC RESEARCH (USC), OR A THIRD-PARTY CERTIFYING ENTITY THAT IS UNRELATED TO THE PRODUCT'S MANUFACTURER OR VENDOR, THAT IS APPROVED BY THE ARIZONA DEPARTMENT OF ENVIRONMENTAL QUALITY.

DETAIL NO.			REVISED	DETAIL NO.
611-1	MARICOPA ASSOCIATION of GOVERNMENTS STANDARD DETAIL ENGLISH	BACKFLOW PREVENTER ASSEMBLY (2" DIA. & SMALLER)	01-01-2023	611-1

M.A.G. STANDARD DETAIL #611-1

N.T.S. | A

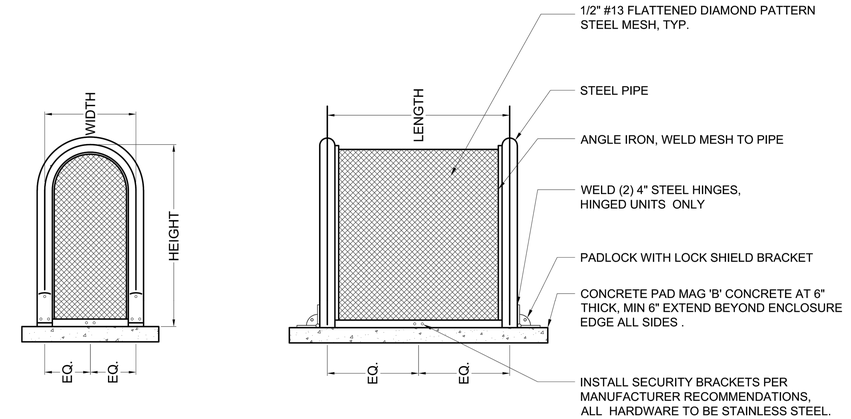

NOTES:

1. ENCLOSURE SHALL BE POWDER COATED BY MANUFACTURER.
2. SEE LEGEND FOR REQUIRED SIZE & COLOR.
3. CONTRACTOR SHALL SUPPLY CONCRETE PAD.

CENTERLINE DIMENSIONS	TYPE
12"W X 18"H X 12"L	LIFT OFF UNIT
12"W X 24"H X 24"L	LIFT OFF UNIT
12"W X 24"H X 32"L	LIFT OFF UNIT
12"W X 24"H X 42"L	HINGED UNIT
12"W X 30"H X 42"L	HINGED UNIT
18"W X 30"H X 48"L	HINGED UNIT

DETAIL NO.			REVISED	DETAIL NO.
611-3	MARICOPA ASSOCIATION of GOVERNMENTS STANDARD DETAIL ENGLISH	ENCLOSURE CAGE FOR BACKFLOW PREVENTER	01-01-2023	611-3

M.A.G. STANDARD DETAIL #611-3

N.T.S. | B

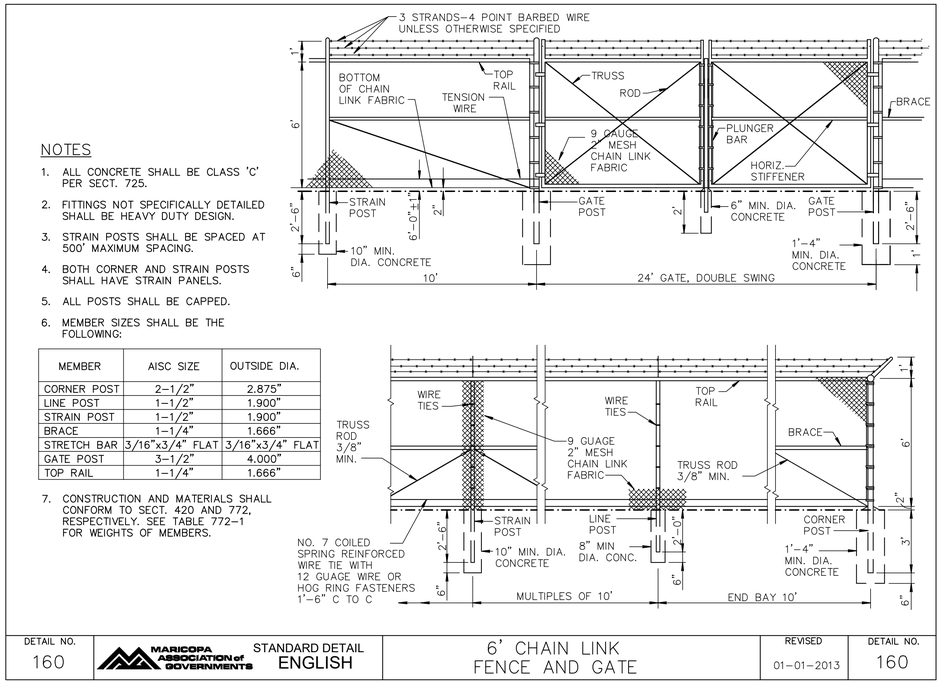

NOTES

1. ALL CONCRETE SHALL BE CLASS 'C' PER SECT. 725.
2. FITTINGS NOT SPECIFICALLY DETAILED SHALL BE HEAVY DUTY DESIGN.
3. STRAIN POSTS SHALL BE SPACED AT 500' MAXIMUM SPACING.
4. BOTH CORNER AND STRAIN POSTS SHALL HAVE STRAIN PANELS.
5. ALL POSTS SHALL BE CAPPED.
6. MEMBER SIZES SHALL BE THE FOLLOWING:

MEMBER	AISC SIZE	OUTSIDE DIA.
CORNER POST	2–1/2"	2.875"
LINE POST	1–1/2"	1.900"
STRAIN POST	1–1/2"	1.900"
BRACE	1–1/4"	1.666"
STRETCH BAR	3/16"x3/4" FLAT	3/16"x3/4" FLAT
GATE POST	3–1/2"	4.000"
TOP RAIL	1–1/4"	1.666"

7. CONSTRUCTION AND MATERIALS SHALL CONFORM TO SECT. 420 AND 772, RESPECTIVELY. SEE TABLE 772–1 FOR WEIGHTS OF MEMBERS.

DETAIL NO.			REVISED	DETAIL NO.
160	MARICOPA ASSOCIATION of GOVERNMENTS STANDARD DETAIL ENGLISH	6' CHAIN LINK FENCE AND GATE	01–01–2013	160

M.A.G. STANDARD DETAIL #160

N.T.S. | C

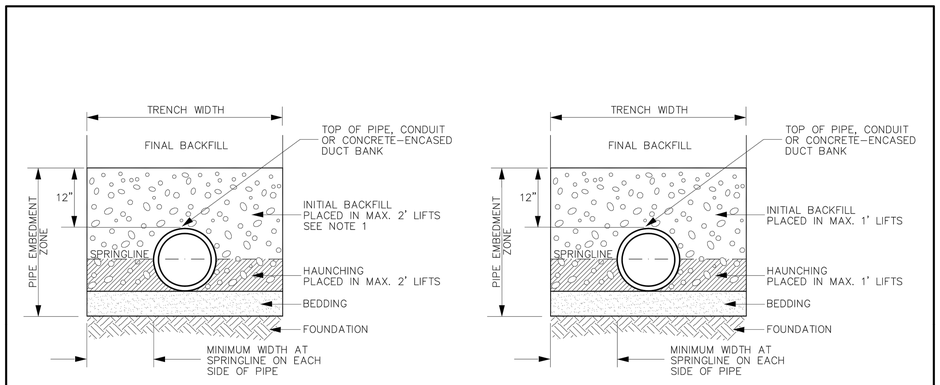

TRENCH-CROSS SECTION DETAIL
RIGID PIPE

TRENCH-CROSS SECTION DETAIL
FLEXIBLE PIPE

NOTES:

1. BEDDING, HAUNCHING AND INITIAL BACKFILL MATERIAL SHALL BE ABC PER SECTION 702. SEE SECTION 601 FOR ALTERNATIVE MATERIALS TO BE USED WITH AGENCY APPROVAL INCLUDING MAXIMUM 1–1/2" NATIVE MATERIAL FOR CONCRETE PIPE INITIAL BACKFILL.
2. SEE SECTION 601 FOR ADDITIONAL TRENCH WIDTH, EXCAVATION, BACKFILLING AND COMPACTION REQUIREMENTS.
3. SEE SECTION 601 FOR PIPE MATERIALS CONSIDERED AS RIGID OR FLEXIBLE.

DETAIL NO.			REVISED	DETAIL NO.
200-3	MARICOPA ASSOCIATION of GOVERNMENTS STANDARD DETAIL ENGLISH	TRENCH BACKFILL AND SURFACE REPLACEMENT	01-01-2023	200-3

M.A.G. STANDARD DETAIL #200-3

N.T.S. | D

NO	BY	DATE	REVISIONS	DATE	APP.

Registered Professional Engineer (Civil) CERTIFICATE NO. 70097 TAYLOR B. PIERCE Signed ARIZONA, U.S.A. Expires 12/31/28

THESE DRAWINGS ARE THE PROPERTY OF P.A.C.E. AND SHALL NOT BE REPRODUCED IN ANY MANNER NOR BE USED FOR CONSTRUCTION UNLESS STAMPED 'ISSUED FOR CONSTRUCTION'.

PREPARED BY: PACE
DESIGNED BY: NE
DRAWN BY: DS, WW
CHECKED BY: TP
SCALE: AS NOTED
DATE: NOV 2025
JOB NO.: B614

TITLE: MECHANICAL DETAILS II

JOB: TOWN OF JEROME WASTEWATER TREATMENT PLANT — YAVAPAI CO. AZ

100% ISSUED FOR BID

PREPARED BY: TAYLOR B. PIERCE R.C.E 70097 DATE

PACE
Advanced Water Engineering
8721 E. Via de Ventura, Suite F-110, SCOTTSDALE, CA 85258
P: (480) 991-3595 | www.pacewater.com

SHEET M8.1
47 OF 99 SHEETS

JOB NO. B614

W:\B614\Engineering\B614-30\sheets\B614 - M8.0 MECHANICAL DETAILS.dwg - Tab: M8.1 - by maddingtonjon on 02/23/26 at 12:41:49 PM

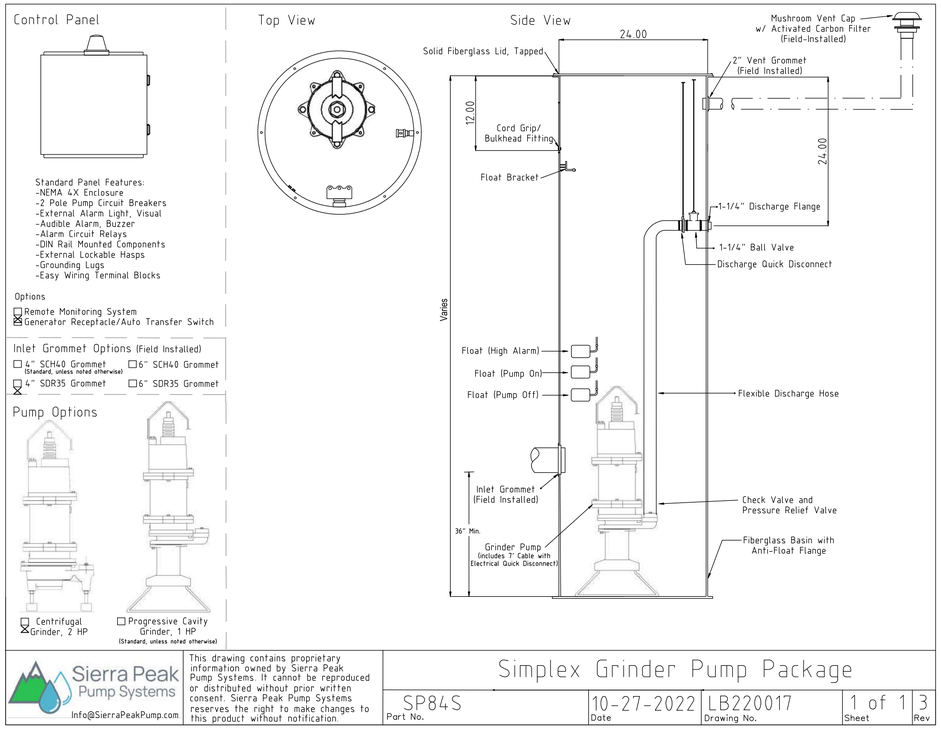

Sierra Peak Pump Systems
Info@SierraPeakPump.com

This drawing contains proprietary information owned by Sierra Peak Pump Systems. It cannot be reproduced or distributed without prior written consent. Sierra Peak Pump Systems reserves the right to make changes to this product without notification.

Simplex Grinder Pump Package

Part No.	Date	Drawing No.	Sheet	Rev
SP84S	10-27-2022	LB220017	1 of 1	3

OVERFLOW LIFT STATION / OR EQUAL

N.T.S. | A

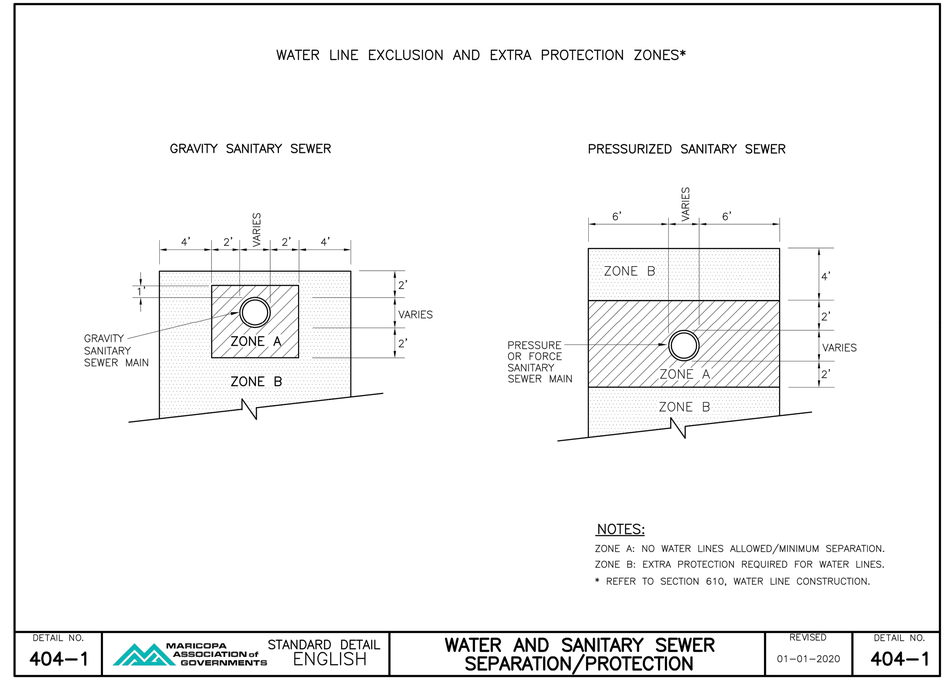

NOTES:
ZONE A: NO WATER LINES ALLOWED/MINIMUM SEPARATION.
ZONE B: EXTRA PROTECTION REQUIRED FOR WATER LINES.
* REFER TO SECTION 610, WATER LINE CONSTRUCTION.

DETAIL NO.			REVISED	DETAIL NO.
404-1	MARICOPA ASSOCIATION of GOVERNMENTS STANDARD DETAIL ENGLISH	WATER AND SANITARY SEWER SEPARATION/PROTECTION	01-01-2020	404-1

M.A.G. STANDARD DETAIL #404-1

N.T.S. | B

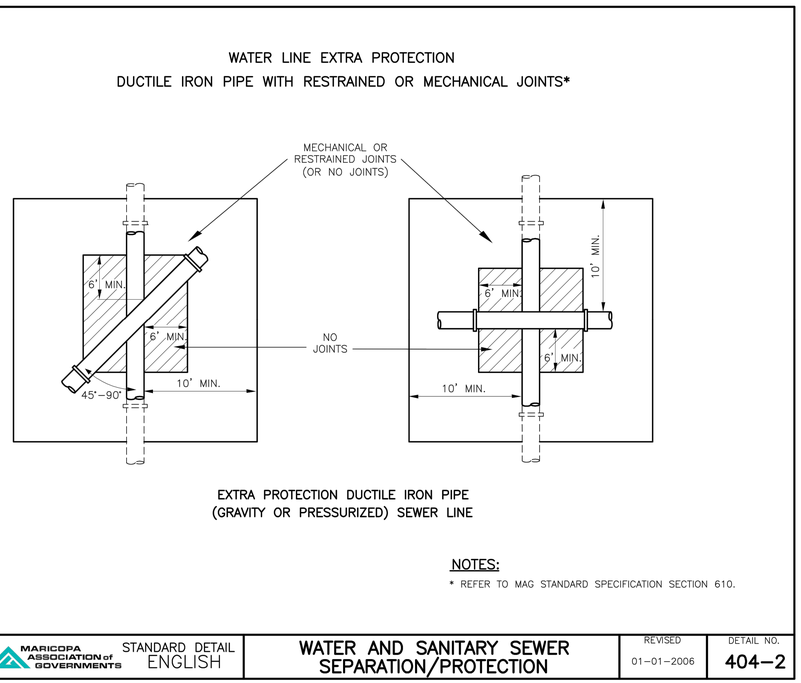

NOTES:
* REFER TO MAG STANDARD SPECIFICATION SECTION 610.

DETAIL NO.			REVISED	DETAIL NO.
404-2	MARICOPA ASSOCIATION of GOVERNMENTS STANDARD DETAIL ENGLISH	WATER AND SANITARY SEWER SEPARATION/PROTECTION	01-01-2006	404-2

M.A.G. STANDARD DETAIL #404-2

N.T.S. | C

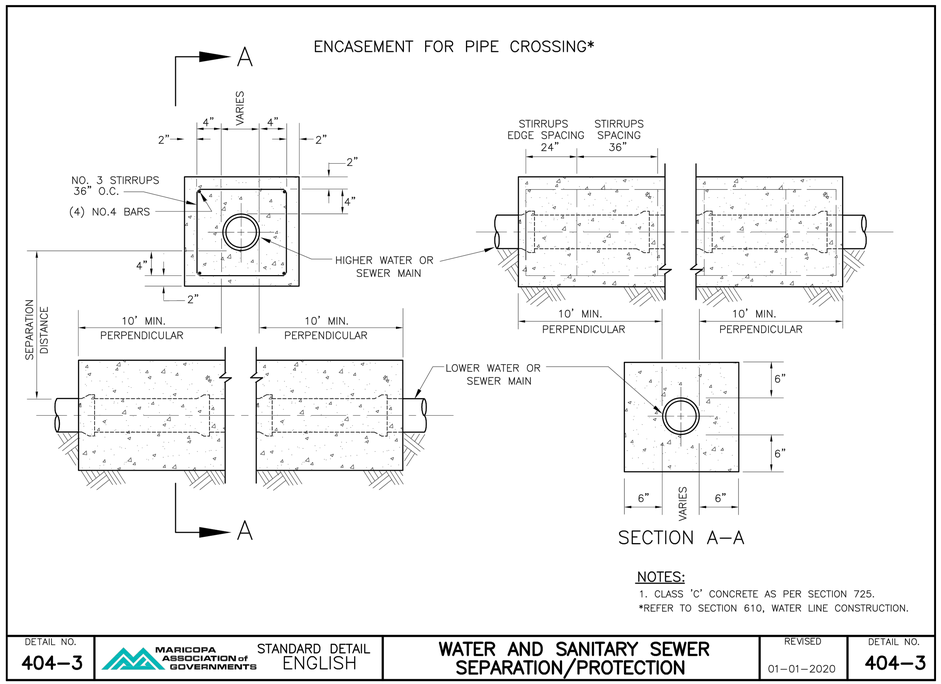

NOTES:
1. CLASS 'C' CONCRETE AS PER SECTION 725.
*REFER TO SECTION 610, WATER LINE CONSTRUCTION.

DETAIL NO.			REVISED	DETAIL NO.
404-3	MARICOPA ASSOCIATION of GOVERNMENTS STANDARD DETAIL ENGLISH	WATER AND SANITARY SEWER SEPARATION/PROTECTION	01-01-2020	404-3

M.A.G. STANDARD DETAIL #404-3

N.T.S. | D

NO	BY	DATE	REVISIONS	DATE	APP.

Registered Professional Engineer (Civil) CERTIFICATE NO. 70097 Timothy B. Pierce Signed 12/31/25 ARIZONA, U.S.A. Expires 12/31/28

PREPARED BY: PACE
DESIGNED BY: NE
DRAWN BY: DS, WW
CHECKED BY: TP
SCALE: AS NOTED
DATE: NOV 2025
JOB NO.: B614

THESE DRAWINGS ARE THE PROPERTY OF P.A.C.E. AND SHALL NOT BE REPRODUCED IN ANY MANNER NOR BE USED FOR CONSTRUCTION UNLESS STAMPED 'ISSUED FOR CONSTRUCTION'.

TITLE: MECHANICAL DETAILS III

JOB: TOWN OF JEROME WASTEWATER TREATMENT PLANT YAVAPAI CO. AZ

100% ISSUED FOR BID

PREPARED BY: TAYLOR B. PIERCE R.C.E 70097 DATE
PACE
Advanced Water Engineering
8723 E. Via de Commercio, Suite 110 SCOTTSDALE, CA 85258
P: (480) 991-3595 | www.pacewater.com

SHEET M8.2
48 OF 99 SHEETS

JOB NO. B614

W:\B614\Engineering\B614-30sheets\B614 - M8.0 MECHANICAL DETAILS.dwg - Tab: M8.2 - by naddington on 02/23/26 at 12:41:49 PM

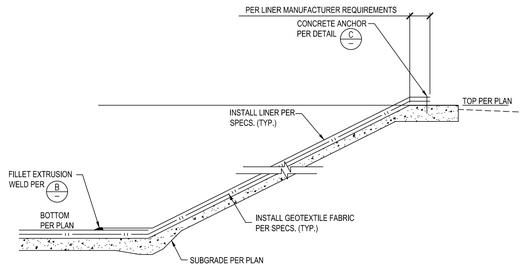

TYPICAL LINER SECTION 1"=1'-0" A

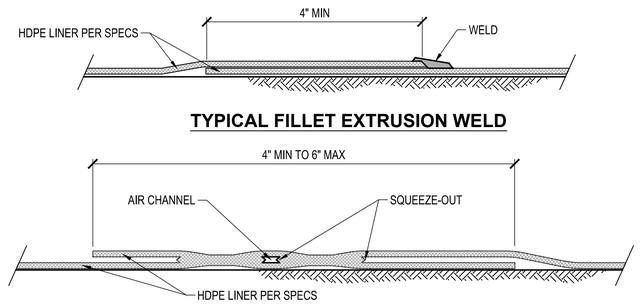

WELD DETAIL N.T.S. B

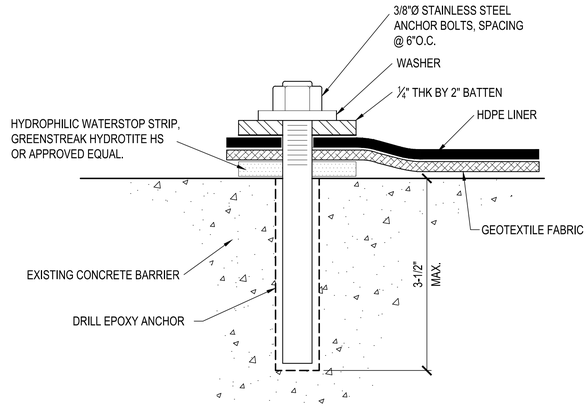

CONCRETE ANCHOR 1"=1'-0" C

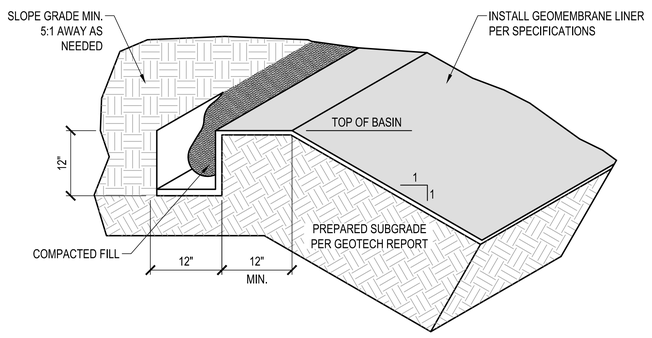

ANCHOR TRENCH N.T.S. D

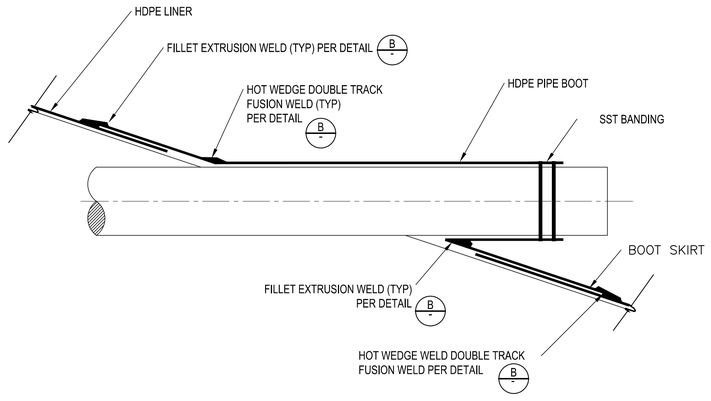

PIPE BOOT 1" = 1'-0" E

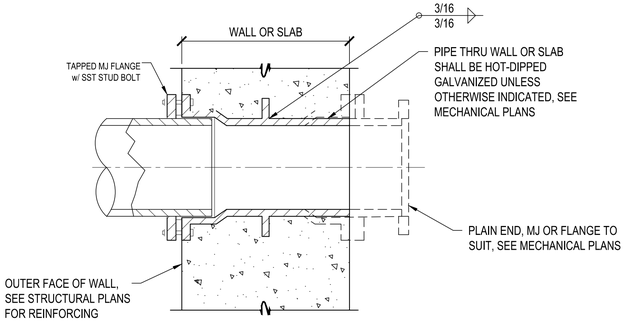

NOTE:
COAT PIPE WITH SPECIFIED PAINT SYSTEM PRIOR TO CONCRETE PLACEMENT

MECHANICAL JOINT WALL SLEEVE F

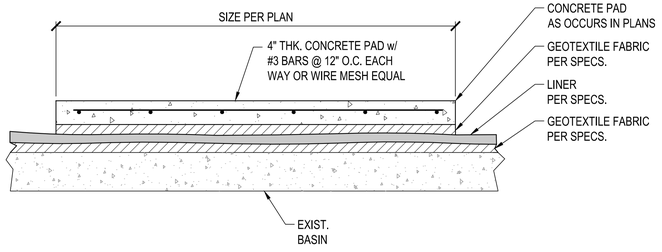

CONCRETE PAD OVER LINER 1"=1'-0" G

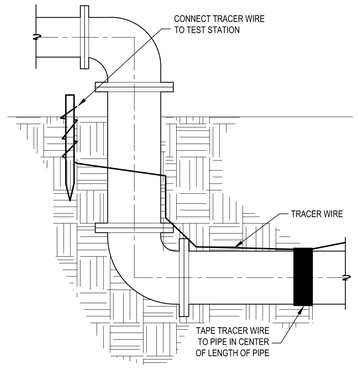

TRACER WIRE N.T.S. H

CONSTRUCTION NOTES

1. INSTALL CONCRETE COLLAR, CONTRACTOR SHALL CONTAIN A MIN. OF 6 1/2 SACKS OF CEMENT PER CUBIC YARD & ATTAIN A COMPRESSIVE STRENGTH OF 4,500 P.S.I. AFTER 28 DAYS IN ACCORDANCE W/ A.S.T.M. C39/C39M-99
2. INSTALL 6" SDR-35 P.V.C. PIPE & ELBOW FOR HEADER PIPE CLEANOUT. INSTALL 4" SDR-35 P.V.C. PIPE FOR PERFORATED PIPELINE CLEANOUT

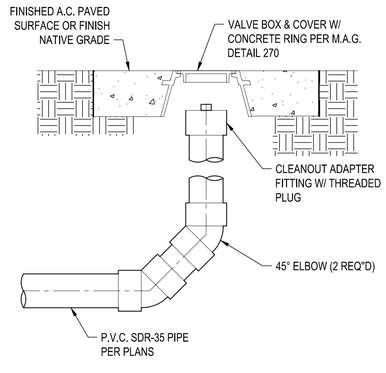

NOTE:
CLEANOUT RING & COVER SHALL BE RAISED TO FINISH GRADE & SUPPORT COLLAR INSTALLED AFTER PAVING OR FINISH GRADING HAS BEEN COMPLETED. CONTRACTOR SHALL COMPACT THE AREA UNDER CONCRETE COLLAR TO THE SATISFACTION OF THE ENGINEER BEFORE PLACING CONCRETE.

CLEANOUT N.T.S. I

100% ISSUED FOR BID

NO	BY	DATE	REVISIONS	DATE	APP.

Registered Professional Engineer (Civil) CERTIFICATE NO. 70097 Timothy R. Pierce Signed ARIZONA, U.S.A. Expires 12/31/28

PREPARED BY: PACE
DESIGNED BY: NE
DRAWN BY: DS, WW
CHECKED BY: TP
SCALE: AS NOTED
DATE: NOV 2025
JOB NO.: B614

THESE DRAWINGS ARE THE PROPERTY OF P.A.C.E. AND SHALL NOT BE REPRODUCED IN ANY MANNER NOR BE USED FOR CONSTRUCTION UNLESS STAMPED 'ISSUED FOR CONSTRUCTION'.

TITLE
MECHANICAL DETAILS IV

JOB
TOWN OF JEROME
WASTEWATER
TREATMENT PLANT
YAVAPAI CO. AZ

PREPARED BY:
PACE
Advanced Water Engineering
8723 E. Via de Commercio, Suite 2, SCOTTSDALE, CA 85258
P: (480) 991-3995 | www.paceaz.com
TAYLOR B. PIERCE R.C.E 70097 DATE

SHEET
M8.3
49 OF 99 SHEETS

JOB NO. B614

W:\B614\Engineering\B614-30\sheets\B614 - M8.0 MECHANICAL DETAILS.dwg - Tab: M8.3 - by noddington on 02/23/26 at 12:41:49 PM

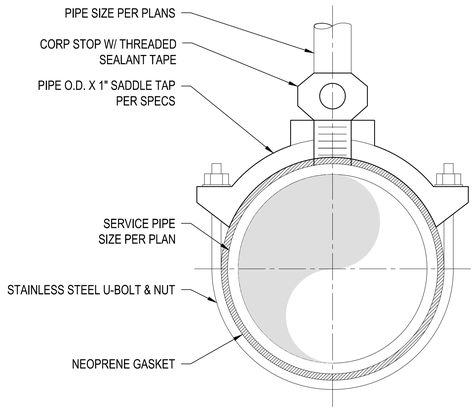

SADDLE TAP

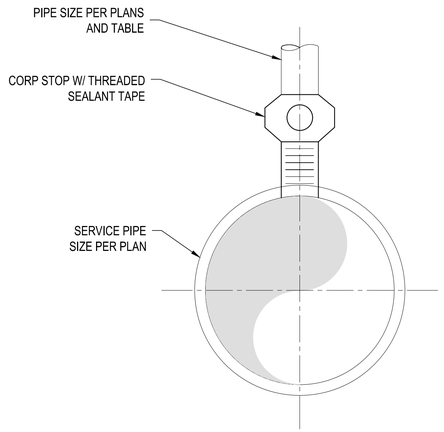

DIRECT TAP

SIZE (in.)	PRESSURE CLASS				
	150	200	250	300	350
	MAXIMUM RECOMMENDED DIRECT TAP SIZE (inch)				
3	-	-	-	-	3/4
4	-	-	-	-	3/4
6	-	-	-	-	1
8	-	-	-	-	1
10	-	-	-	-	1
12	-	-	-	-	1 1/4
14	-	-	1 1/4	1 1/2	1 1/2
16	-	-	1 1/2	2	2
18	-	-	2	2	2
20	-	-	2	2	2
24	-	2	2	2	2

PIPE TAP

N.T.S. **A**

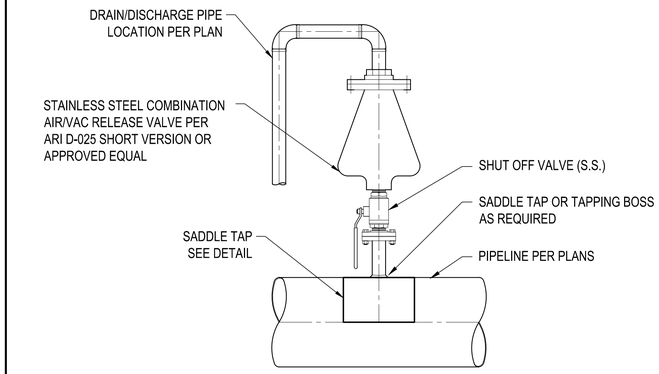

AIR/VAC RELEASE VALVE

N.T.S. **B**

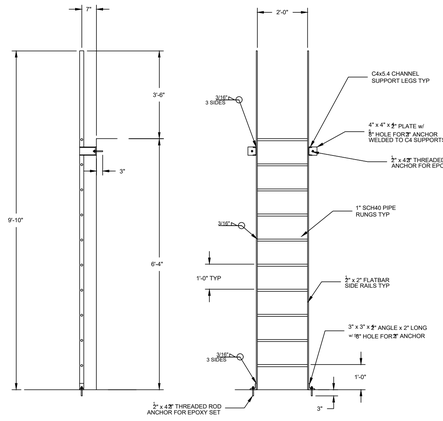

NOTES:

1. ALL MATERIALS SHALL BE CARBON STEEL.
2. ALL MATERIALS TO BE SHOP PRIMED W/ CARBOLINE 150 AFTER FABRICATION.

SHIP LADDER

N.T.S. **C**

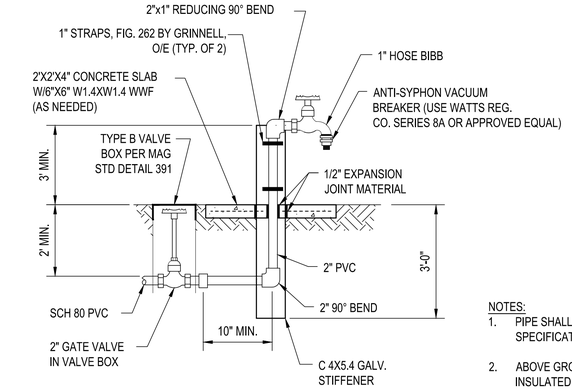

NOTES:

1. PIPE SHALL BE COLOR-CODED PER SPECIFICATIONS
2. ABOVE GROUND PIPING SHALL BE INSULATED PER SPECIFICATIONS. EXTEND INSULATION TO 12" BELOW GROUND.

HOSE BIB

N.T.S. **D**

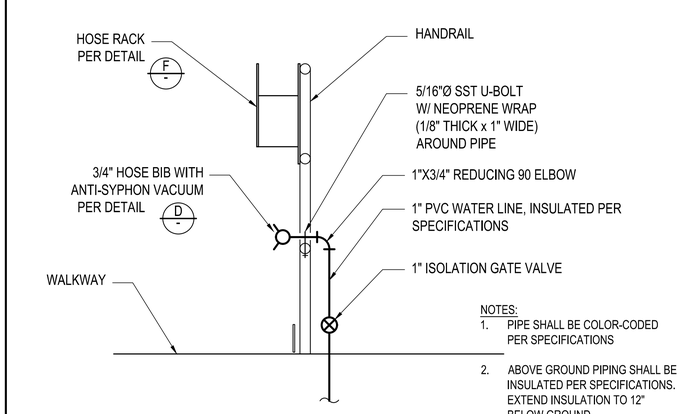

NOTES:

1. PIPE SHALL BE COLOR-CODED PER SPECIFICATIONS
2. ABOVE GROUND PIPING SHALL BE INSULATED PER SPECIFICATIONS. EXTEND INSULATION TO 12" BELOW GROUND.

RAIL MOUNTED HOSE VALVE

N.T.S. **E**

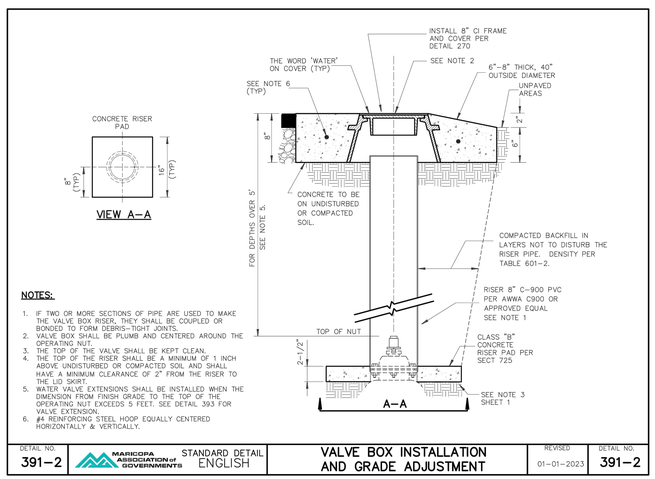

NOTES:

1. IF TWO OR MORE SECTIONS OF PIPE ARE USED TO MAKE THE VALVE BOX RISER, THEY SHALL BE COUPLED OR BONDED TO FORM DEBRIS-TIGHT JOINTS.
2. VALVE BOX SHALL BE PLUMB AND CENTERED AROUND THE OPERATING NUT.
3. THE TOP OF THE VALVE SHALL BE KEPT CLEAN.
4. THE TOP OF THE RISER SHALL BE A MINIMUM OF 1 INCH ABOVE UNDISTURBED OR COMPACTED SOIL AND SHALL HAVE A MINIMUM CLEARANCE OF 2" FROM THE RISER TO THE LID SKIRT.
5. WATER VALVE EXTENSIONS SHALL BE INSTALLED WHEN THE DIMENSION FROM FINISH GRADE TO THE TOP OF THE OPERATING NUT EXCEEDS 5 FEET. SEE DETAIL 393 FOR VALVE EXTENSION.
6. #4 REINFORCING STEEL HOOP EQUALLY CENTERED HORIZONTALLY & VERTICALLY.

DETAIL NO.		STANDARD DETAIL		REVISED	DETAIL NO.
391-2	MARICOPA ASSOCIATION of GOVERNMENTS	ENGLISH	VALVE BOX INSTALLATION AND GRADE ADJUSTMENT	01-01-2023	391-2

VALVE BOX

N.T.S. **F**

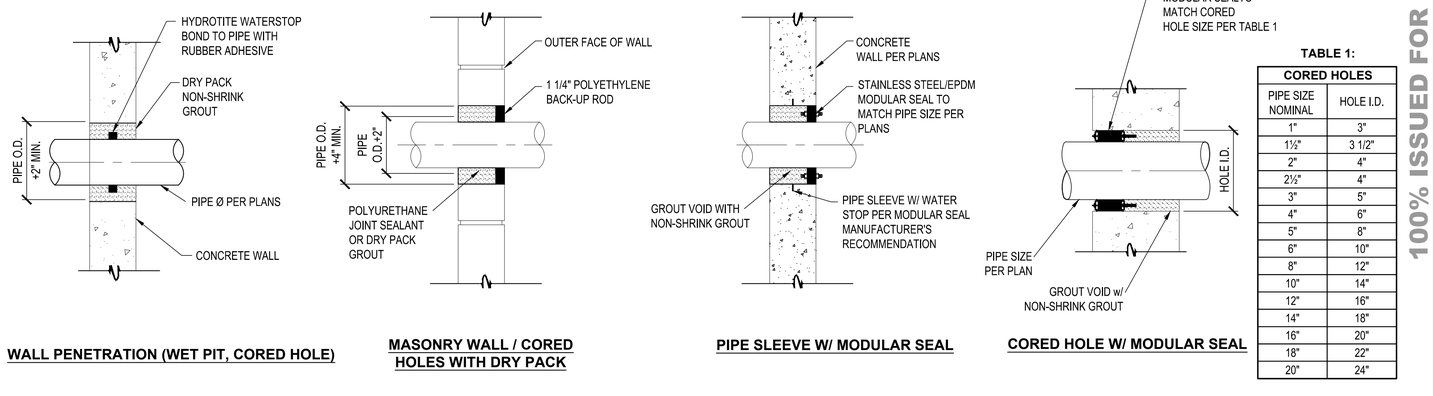

WALL PENETRATION (WET PIT, CORED HOLE)

MASONRY WALL / CORED HOLES WITH DRY PACK

PIPE SLEEVE W/ MODULAR SEAL

CORED HOLE W/ MODULAR SEAL

TABLE 1:

CORED HOLES	
PIPE SIZE NOMINAL	HOLE I.D.
1"	3"
1½"	3 1/2"
2"	4"
2½"	4"
3"	5"
4"	6"
5"	8"
6"	10"
8"	12"
10"	14"
12"	16"
14"	18"
16"	20"
18"	22"
20"	24"

PIPE PENETRATION DETAIL

N.T.S. **G**

100% ISSUED FOR BID

PREPARED BY: TAYLOR B. PIERCE R.C.E 70097 DATE

PACE
Advanced Water Engineering
8723 E. Via de Ventura, Suite 220, Scottsdale, CA 85258
P: (408) 991-3595 | www.pacewater.com

JOB TOWN OF JEROME WASTEWATER TREATMENT PLANT YAVAPAI CO. AZ

SHEET **M8.4** 50 OF 99 SHEETS

JOB NO. B614

TITLE **MECHANICAL DETAILS V**

NO	BY	DATE	REVISIONS	DATE	APP.

Registered Professional Engineer (Civil) CERTIFICATE NO. 70097 TAYLOR B. PIERCE Signed ARIZONA, U.S.A. Expires 12/31/28

PREPARED BY: PACE
DESIGNED BY: NE
DRAWN BY: DS, WW
CHECKED BY: TP
SCALE: AS NOTED
DATE: NOV 2025
JOB NO.: B614

THESE DRAWINGS ARE THE PROPERTY OF P.A.C.E. AND SHALL NOT BE REPRODUCED IN ANY MANNER NOR BE USED FOR CONSTRUCTION UNLESS STAMPED 'ISSUED FOR CONSTRUCTION'.

W:\B614\Engineering\B614-3\Sheets\B614 - M8.0 MECHANICAL DETAILS.dwg - Tab: M8.4 - by reddington on 02/22/26 at 12:41:49 PM

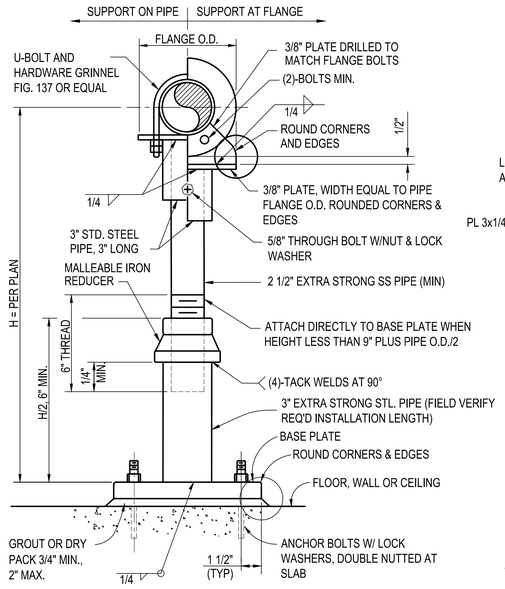

LOCATION	MEMBER	
	BASE PLATE	ANCHOR BOLTS
FLOOR	3/8 X 9 X 9	4-5/8"
CEILING	5/8 X 9 X 9	4-3/4"
WALL	5/8 X 9 X 9	4-3/4"

NOTES:
1. AS AN ALTERNATE, IF ADJUSTMENT IS NOT NECESSARY, DELETE 2 1/2" PIPE AND REDUCER AND WELD 3" STEEL PIPE DIRECTLY TO 3/8" PLATE ATTACHED TO PIPE FLANGE.
2. PIPE SUPPORT MAY BE ORIENTATED IN ANY DIRECTION.
3. FOR H > 3'-0", CONTRACTOR SHALL USE GRINNELL FIG. 264 AS APPROVED BY ENGINEER.

S1

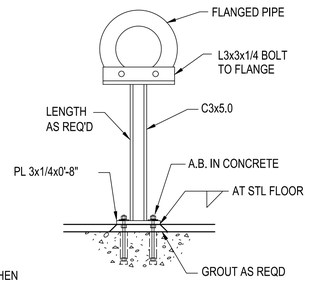

S2

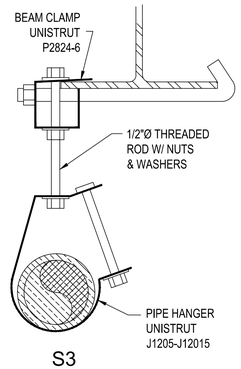

S3

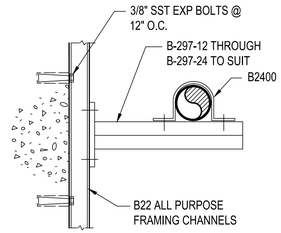

S4

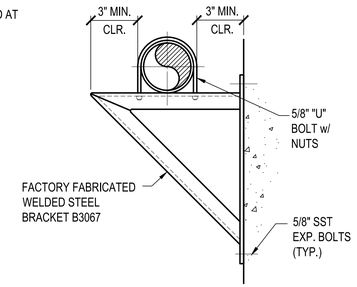

S5

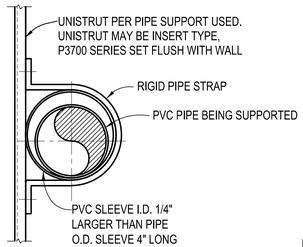

S6

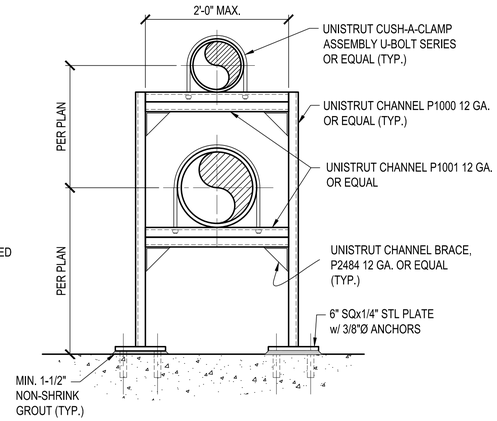

S7

GENERAL NOTES:

1. WHERE NO REFERENCE TO PIPE HANGERS OR SUPPORTS IS GIVEN ON THE DRAWINGS, THE CONTRACTOR SHALL USE THE APPROPRIATE HANGER OR SUPPORT SHOWN ON THIS DRAWING. MAXIMUM HANGER AND SUPPORT SPACING SHALL BE AS SHOWN IN SCHEDULE "A" ON THIS DRAWING. FIGURE NUMBERS ARE B-LINE, UNISTRUT OR GRINNELL.
2. ALL CONCRETE INSERTS, BRACKETS, CHANNELS, BOLTS, RODS, AND MISCELLANEOUS HARDWARE USED FOR PIPE HANGERS OR SUPPORTS SHALL BE 316 S.S., U.N.O.
3. CONCRETE CONTINUOUS INSERTS, B-LINE SERIES B52i, OR EQUAL, SHALL BE PROVIDED IN THE WALLS AND CEILINGS AS REQ'D OR AS NOTED ON THE DRAWINGS. INSERTS IN THE WALLS SHALL BE VERTICAL, UNLESS OTHERWISE NOTED AND SHALL BEGIN 6 INCHES ABOVE THE FLOOR AND END 6 INCHES BELOW THE CEILING. INSERTS IN THE CEILING SHALL BEGIN AND END 3 INCHES FROM WALLS AND BEAMS, WHERE PRACTICABLE. THE CENTERLINES OF WALL AND CEILING INSERTS SHALL ALIGN. MAXIMUM CENTER TO ENTER SPACING OF INSERTS SHALL BE 5'-0".
4. IN AREAS NOT COVERED UNDER NOTE 3, CONCRETE INSERTS SHALL BE B-LINE SERIES B3014N WITH APPROPRIATE NUT, B-LINE SERIES B521i CHANNEL EMBEDDED ANCHOR BOLTS, OR EQUAL. IN WITHOUT THE PRIOR WRITTEN APPROVAL OF THE ENGINEER (FOR EQUIPMENT LIFTING DEVICES, (SEE STRUCTURAL DRAWINGS).
5. SUPPORTS SHALL MEET MANUFACTURERS STANDARDIZATION SOCIETY OF THE VALVE AND FITTINGS INDUSTRY STANDARD PRACTICE SP58, LATEST EDITION.
6. HANGER BRACKET AND SUPPORT COMPONENTS MAY BE INTERCHANGED AS APPROVED BY THE ENGINEER.
7. TRAPEZE AND PIPE RACK COMPONENTS SHALL HAVE A MINIMUM STEEL THICKNESS OF 12 GAUGE. MAXIMUM DEFLECTION SHALL BE LIMITED TO 1/240 OF THE SPAN. CHANNEL COMPONENTS SHALL BE B-LINE SERIES B22 OR B22A, OR EQUAL.
8. CONCRETE INSERTS IN AREAS BELOW WATER SURFACE OR NORMALLY SUBJECT TO SUBMERGING SHALL BE EMBEDDED ANCHOR BOLTS, OR APPROVED EQUAL. IN NO CASE SHALL CONCRETE CONTINUOUS INSERTS BE USED IN THESE AREAS.
9. ALL PIPING, DUCTWORK, ACCESSORIES, APPURTENANCES, ETC. SHALL BE ANCHORED TO RESIST 200% OF THE APPLIED LOAD & A LATERAL SEISMIC FORCE OF 40 PERCENT OF ITS WEIGHT WITHOUT EXCESSIVE DEFLECTION.
10. CONTRACTOR SHALL VERIFY ALL SUPPORT DIMENSIONS AND LOCATIONS WITH APPROVED SHOP DRAWINGS FOR ITEMS BEING SUPPORTED BEFORE FABRICATION OR INSTALLATION OF SUPPORTS.

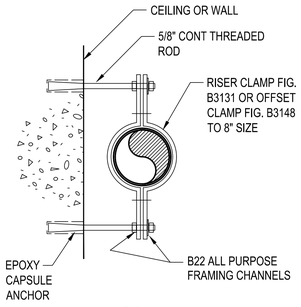

S8

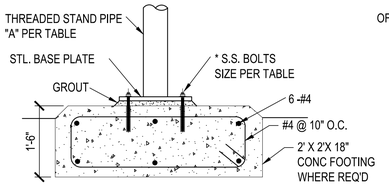

DIMENSIONS				
PIPE Ø SIZE	BOLT SIZE	STAND PIPE "A"	ADJ. PIPE "B"	FLANGE SUPPORT PLATE THK. "C"
4-12	1/2	3"	2 1/2"	1/4"
14-16	5/8	4"	3"	3/8"
18-36	7/8	6"	4"	3/8"

INSTALLATION NOTE:
PIPE SUPPORT SPACING, MATERIAL AND QUANTITY PER SPECS.

* BOLT EMBEDMENT DEPTH PER TABLE HEREON.

S1A

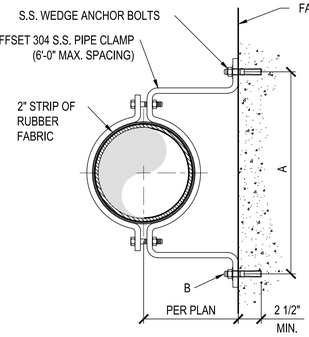

DIMENSIONS			
PIPE SIZE	A	HOLE SIZE B	BOLT SIZE
3	9 1/2	7/16	3/8
4	10 9/16	9/16	1/2
5	11 11/16	9/16	1/2
6	14 3/8	9/16	1/2
8	16 7/16	9/16	1/2
10	21 1/2	13/16	3/4
12	24 7/8	13/16	3/4
18	31	13/16	3/4
24	37	1 11/16	1

S9

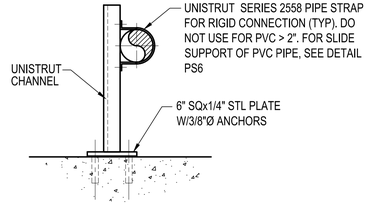

S12

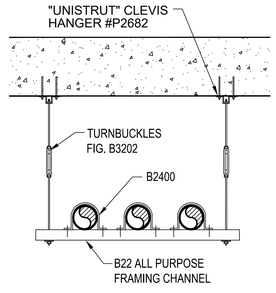

S10

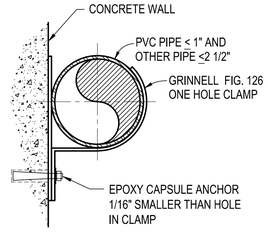

S11

SCHEDULE "A"

PIPE HANGER RODS AND SUPPORT SPACING

PIPE SIZE	ROD SIZE (INCHES)	MAX. SPAN (FT.) STEEL PIPE	COPPER PIPE	PVC PIPE	DUCTILE IRON PIPE	FIBERGLASS
UP TO 1"	3/8	6	5	5	-	-
1 1/4" TO 2"	3/8	10	8	5.5	10	-
2 1/2" TO 3 1/2"	1/2	10	8	6	10	-
4" TO 5"	5/8	10	-	8	10	-
6"	3/4	10	-	9	10	-
8" TO 12"	7/8	10	-	9	10	-
ABOVE 12"	1	10	-	9	10	-

BOLT DIAMETER	VERT BOLT EMBEDMENT LENGTH	HORIZ BOLT EMBEDMENT LENGTH	HEADED STUD FILLET WELD SIZE, "S".
1/2"	6"	4"	1/4"
5/8"	6"	4"	5/16"
3/4"	7"	5"	5/16"
7/8"	8"	6"	5/16"
1"	9"	7"	3/8"
1 1/8"	10"	8"	-----
1 1/4"	11"	9"	-----

TYP. ANCHOR AND EXPANSION BOLT SCHEDULE

NO	BY	DATE	REVISIONS	DATE	APP.

Registered Professional Engineer (Civil) CERTIFICATE NO. 70097 Timothy Pierce Signed ARIZONA, U.S.A. Expires 12/31/28

PREPARED BY: PACE
DESIGNED BY: NE
DRAWN BY: DS, WW
CHECKED BY: TP
SCALE: AS NOTED
DATE: NOV 2025
JOB NO.: B614

THESE DRAWINGS ARE THE PROPERTY OF P.A.C.E. AND SHALL NOT BE REPRODUCED IN ANY MANNER NOR BE USED FOR CONSTRUCTION UNLESS STAMPED "ISSUED FOR CONSTRUCTION".

TITLE: **MECHANICAL DETAILS VI**

100% ISSUED FOR BID

JOB: TOWN OF JEROME WASTEWATER TREATMENT PLANT — YAVAPAI CO. AZ

PREPARED BY: TAYLOR B. PIERCE — R.C.E. 70097 — DATE

PACE
Advanced Water Engineering
8723 E. VIA de VENTURA, BLDG. A, SUITE 220, SCOTTSDALE, CA 85258
P: (480) 991-3955 | www.pacewater.com

SHEET **M8.5**
51 OF 99 SHEETS

JOB NO. B614

PIPE SUPPORT DETAILS — N.T.S. — A

W:\B614\Engineering\B614-30sheet\B614 - M8.0 MECHANICAL DETAILS.dwg - Tab: M8.5 - by neddington on 02/22/26 at 12:41:49 PM

GENERAL STRUCTURAL NOTES

APPLY UNLESS NOTED OTHERWISE

PK ASSOCIATES, LLC
6900 E. Belleview Ave. #200
Greenwood Village, Colorado 80111
Phone: (720) 799-1058
Email: cadd@pkastructural.com
Website: www.pkastructural.com

BUILDING CODE:

2012 EDITION OF THE INTERNATIONAL BUILDING CODE WITH TOWN OF JEROME AMENDMENTS.

LOADS:

ROOF LIVE LOAD = 20 PSF (REDUCIBLE).
TOTAL ROOF DEAD LOAD = 20 PSF.
GROUND SNOWLOAD = 20 PSF.
ROOF SNOW = 18.5 PSF.

WIND:

THE STRUCTURE AND ITS COMPONENTS ARE DESIGNED FOR WIND LOADS AS DEFINED BY THE BUILDING CODE, WHERE:

BASIC WIND SPEED 120 MPH.
RISK CATEGORY: III.
WIND EXPOSURE: C.
VELOCITY PRESSURE, qz = 23.7 PSF AT h = 12' FT. (MEAN ROOF HEIGHT). DESIGN WIND PRESSURES COMPONENTS AND CLADDING:

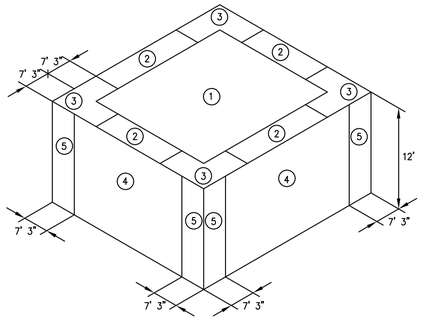

*PRESSURES SHOWN ARE ULTIMATE. MULTIPLY BY 0.6 FOR SERVICE LEVEL PRESSURES.

LOCATION	ZONE	EFFECTIVE WIND AREA (SF)	DESIGN WIND PRESSURE (PSF)*	
ROOF	1	10	+16.0	−54.9
		20	+16.0	−50.9
		50	+16.0	−45.6
		100	+16.0	−41.6
	2	10	+16.0	−74.2
		20	+16.0	−69.1
		50	+16.0	−62.3
		100	+16.0	−57.1
	3	10	+16.0	−103.3
		20	+16.0	−93.0
		50	+16.0	−79.4
		100	+16.0	−69.1
WALLS	4	10	+31.1	−30.4
		20	+29.1	−29.1
		50	+26.3	−27.2
		100	+24.2	−25.8
		500	+19.4	−22.6
	5	10	+31.1	−63.7
		20	+29.1	−58.1
		50	+26.3	−50.8
		100	+24.2	−45.2
		500	+19.4	−32.3
PARAPET	INTERIOR	10	+103.3	−58.1
		50	+88.6	−53.5
		100	+81.4	−50.0
	EXTERIOR	10	+132.4	−87.2
		50	+105.7	−77.0
		100	+93.3	−69.4

ZONE1: INTERIOR AREA OF ROOF AWAY FROM BUILDING EXTERIOR WALLS.
ZONE2: ROOF AREAS WITHIN 7'−3" OF EXTERIOR WALLS.
ZONE3: ROOF AREAS WITHIN 7'−3" OF BUILDING CORNERS.
ZONE4: EXTERIOR WALLS AWAY FROM BUILDING CORNERS.
ZONE5: EXTERIOR WALLS WITHIN 7'−3" OF BUILDING CORNERS.
−DESIGN WIND PRESSURES − PLUS AND MINUS SIGNS SIGNIFY PRESSURE ACTING TOWARD AND AWAY FROM EXTERIOR SURFACE.
−LINEAR INTERPOLATION BETWEEN VALUES OF TRIBUTARY AREA IS PERMISSIBLE.

SEISMIC:

RISK CATEGORY = III.
SEISMIC IMPORTANCE FACTOR: Ie = 1.25.
DESIGN CATEGORY = B.
SITE CLASS C.
SS = 0.31, S1 = 0.097, R = 3.5.
Sds = 0.269, Sd1 = 0.097.
BASIC SEISMIC−FORCE−RESISTING SYSTEM (INTERMEDIATE REINFORCED MASONRY SHEAR WALLS).
ANALYSIS PROCEDURE USED (EQUIVALENT LATERAL FORCE PROCEDURE).
CS = 0.096 (FACTORED).

FOUNDATIONS:

SOIL REPORT BY WESTERN TECHNOLOGIES INC; JOB NO.2522JW197; DATED OCTOBER 25, 2022; SPREAD FOOTINGS SHALL BEAR ON FIRM, UNDISTURBED SOIL AT BELOW GRADE TANKS AND 1' OF 2 SACK SLURRY AT GRADE. IN ACCORDANCE WITH THE ABOVE REPORT, BOTTOM OF FOOTING TO BE 2'0" MINIMUM BELOW FINISHED GRADE. (THESE FOOTING DEPTHS ARE MINIMUMS AND THE CONTRACTOR SHALL COORDINATE WITH SOILS REPORT AND OTHER TRADES TO ENSURE THESE MINIMUMS ARE SUFFICIENT FOR THE WORK.) FINISHED GRADE IS DEFINED AS TOP OF SLAB FOR INTERIOR FOOTINGS AND LOWEST ADJACENT GRADE WITHIN 5 FEET FOR PERIMETER FOOTINGS. DESIGN SOIL BEARING VALUE = 2500 PSF. FOUNDATION EXCAVATIONS SHALL BE INSPECTED BY SOILS ENGINEER PRIOR TO PLACEMENT OF CONCRETE.

CONCRETE:

MINIMUM 28 DAY STRENGTH 5,000 PSI EXCEPT AS FOLLOWS: (TYPE II, U.N.O.)

WALLS ---------- 5,000 PSI
MILD REINFORCED SLAB ---------- 5,000 PSI
FOUNDATIONS ---------- 5,000 PSI

MECHANICALLY VIBRATE ALL CONCRETE WHEN PLACED, EXCEPT THAT SLABS ON GRADE NEED BE VIBRATED ONLY AROUND UNDER−FLOOR DUCTS, ETC. MAXIMUM SLUMP 4 1/2" FOR CONCRETE WITHOUT PLASTICIZER. IF PLASTICIZER IS USED, A HIGHER FINAL SLUMP MAY BE ALLOWED UPON STRUCTURAL ENGINEER'S APPROVAL. CAST CLOSURE POUR AROUND COLUMNS AFTER COLUMN DEAD LOAD IS APPLIED. UNLESS APPROVED OTHERWISE IN WRITING BY THE ARCHITECT, ALL CONCRETE SLABS ON GRADE SHALL BE BOUND BY CONTROL JOINTS (KEYED OR SAW CUT), SUCH THAT THE ENCLOSED AREA DOES NOT EXCEED 225 SQUARE FEET. KEYED CONTROL JOINTS NEED ONLY OCCUR AT EXPOSED EDGES DURING POURING, ALL OTHER JOINTS MAY BE SAW CUT. CONTRACTOR SHALL SUBMIT PROPOSED LOCATIONS FOR APPROVAL PRIOR TO CONSTRUCTION.

REINFORCING:

ASTM A615 (FY = 60 KSI) DEFORMED BARS FOR ALL BARS. ALL GRADE 60 REINFORCING TO BE WELDED SHALL BE ASTM A706. WELDED WIRE FABRIC PER ASTM A185, WIRE PER ASTM A82. NO TACK WELDING OF REINFORCING BARS ALLOWED WITHOUT PRIOR REVIEW OF PROCEDURE WITH THE STRUCTURAL ENGINEER. LATEST ACI CODE AND DETAILING MANUAL APPLY. CLEAR CONCRETE COVERAGES AS FOLLOWS UNLESS NOTED OTHERWISE IN THE CONCRETE FIRE RATING TABLE:

CAST AGAINST AND PERMANENTLY EXPOSED TO EARTH ---------- 3"
EXPOSED TO EARTH OR WEATHER
#6 OR LARGER ---------- 2"
#5 AND SMALLER ---------- 1 1/2"
FLAT SLAB ---------- 3/4"
ALL OTHER PER LATEST EDITION OF ACI 318.

LAP SPLICES IN CONCRETE:

LAP SPLICES, UNLESS NOTED OTHERWISE, SHALL BE CLASS "B" TENSION LAP SPLICES PER LATEST EDITION OF ACI 318. LAP SPLICES IN CONCRETE COLUMNS SHALL BE TENSION LAP SPLICES. STAGGER SPLICES A MINIMUM OF ONE LAP LENGTH. LAPS IN WELDED WIRE FABRIC SHALL BE MADE SO THAT THE OVERLAP, MEASURED BETWEEN OUTERMOST CROSS WIRES OF EACH FABRIC SHEET, IS NOT LESS THAN THE SPACING OF CROSS WIRES PLUS 2 INCHES. ALL WELDED WIRE FABRIC SHALL BE CHAIRED TO ENSURE PROPER CLEARANCES.

ALL SPLICE LOCATIONS SUBJECT TO APPROVAL BY THE STRUCTURAL ENGINEER. PROVIDE BENT CORNER BARS TO MATCH AND LAP WITH HORIZONTAL BARS AT ALL CORNERS AND INTERSECTIONS PER TYPICAL DETAILS. REINFORCING BAR SPACING GIVEN ARE MAXIMUM ON CENTERS. ALL BARS PER CRSI SPECIFICATIONS AND HANDBOOK. DOWEL ALL VERTICAL REINFORCING TO FOUNDATION WITH STANDARD 90−DEGREE HOOKS UNLESS NOTED OTHERWISE. SECURELY TIE ALL BARS IN LOCATION BEFORE PLACING CONCRETE.

MASONRY:

MECHANICALLY VIBRATE GROUT IN VERTICAL SPACES IMMEDIATELY AFTER POURING AND AGAIN ABOUT 5 MINUTES LATER. PROVIDE CLEANOUTS IF GROUT LIFT EXCEEDS 4'−0" IN BLOCK WALLS. MAXIMUM GROUT LIFT SHALL BE 8'−0". UNLESS NOTED OTHERWISE ON THE PLANS, PLACE CONTROL JOINTS IN MASONRY WALLS SUCH THAT NO STRAIGHT RUN OF WALL EXCEEDS 24'−0". CONTROL JOINTS SHALL NOT OCCUR WITHIN 8'−0" OF WALL CORNERS, INTERSECTIONS, ENDS, WITHIN 24" OF CONCENTRATED POINTS OF BEARING OR JAMBS, OR OVER OPENINGS UNLESS SPECIFICALLY SHOWN ON THE STRUCTURAL DRAWINGS. ALL MASONRY BELOW FINISHED FLOOR OR GRADE SHALL BE GROUTED SOLID. LAP SPLICES SHALL BE AS FOLLOWS:

BAR SIZE	#3	#4	#5	#6	#7	#8	#9
BAR LAPS (INCHES)	27	36	45	54	63	72	81

HOLLOW CONCRETE MASONRY UNITS SHALL CONFORM TO ASTM C90, NORMAL WEIGHT, RUNNING BOND, MORTAR TYPE S (1800 PSI), COMPRESSIVE STRENGTHS AS FOLLOWS:

F'M(PSI)	UNIT STRENGTH, NET (PSI)	GROUT (PSI)	LOCATION
2000	2000	2000	TYPICAL U.N.O.

VERTICAL REINFORCING:

1 #5 IN CENTER OF GROUT AT CENTER OF WALL, CONTINUOUS FULL HEIGHT OF WALL AT ALL CORNERS, INTERSECTIONS, WALL ENDS, BEAM BEARINGS, JAMBS, EACH SIDE OF CONTROL JOINTS AND AT INTERVALS NOT TO EXCEED 48" O.C. UNLESS NOTED OTHERWISE. TIE AT 8'−0" VERTICALLY, WITH SINGLE WIRE LOOP TIE BY A.A. WIRE PRODUCTS COMPANY. LAP SPLICES SHALL BE AS PER SCHEDULE UNDER "MASONRY" SECTION. DOWEL ALL VERTICAL REINFORCING TO FOUNDATION WITH DOWELS TO MATCH VERTICAL REINFORCING.

HORIZONTAL REINFORCING:

2 #5 IN MINIMUM 8" DEEP GROUTED CONTINUOUS BOND BEAM AT (ELEVATED FLOORS AND) ROOFLINE. 1 #5 IN MINIMUM 8" DEEP GROUTED CONTINUOUS BOND BEAM AT TOP OF PARAPET OR TOP OF A FREESTANDING WALL AND AT BOTTOM OF WALL. USE 1 #4 HORIZONTAL BOND BEAM AT 48" O.C. VERTICALLY SPACED FOR ALL WALLS WITHOUT RUNNING BOND (STACKED BOND). PLACE THESE BARS CONTINUOUS THRU CONTROL JOINTS PER TYPICAL DETAIL. PROVIDE BENT BARS PER TYPICAL DETAILS, TO MATCH HORIZONTAL BOND BEAM REINFORCING, AT CORNERS AND WALL INTERSECTION TO MAINTAIN BOND BEAM CONTINUITY. LAP SPLICES SHALL BE AS PER SCHEDULE UNDER "MASONRY" SECTION. DO NOT SPLICE WITHIN 8'−0" OF CONTROL JOINTS. USE STANDARD WEIGHT (NO. 9 GAGE WIRE) DUR−O−WAL OR DUR−O−WIRE (OR EQUIVALENT) LADDER TYPE JOINT REINFORCEMENT AT 16" O.C. IN MASONRY WALLS.

ANCHOR BOLTS:

ALL ANCHOR BOLTS SHALL BE ASTM F1554 GRADE 36 (WELDABLE), U.N.O., WHEN SPECIFIED ON PLAN, ALL ASTM F1554 GRADE ANCHOR BOLTS SHALL BE 511 (WELDABLE) ANCHOR BOLTS.

MAY BE BENT IN FIELD PER AISC REQUIREMENTS TO FIX DAMAGED ANCHOR BOLTS; FIELD BENT IS LIMITED TO 45° OR LESS. ANCHOR BOLTS CAN HAVE HEADED OR HOOKED BOLTS SHAPES. USE HEADED ANCHOR BOLTS WHERE ANCHOR BOLT SHAPE IS NOT SPECIFIED. ANCHOR BOLTS SHALL BE INSPECTED PER SPECIAL INSPECTION TABLE REQUIREMENTS.

STRUCTURAL STEEL:

STEEL SETIONS − MINIMUM GRADE AND STRENGTH

STEEL WIDE FLANGES	= ASTM A992 (50KSI)
STEEL CHANNELS	= ASTM A36 (36KSI)
STEEL ANGLES	= ASTM A36 (36KSI)
STEEL COLUMN BASE PLATES	= ASTM A992 (50KSI)
STEEL PLATES AT MOMENT FRAME AND BRACED FRAME CONNECTIONS	= ASTM A992 (50KSI)
STEEL PLATES (MISCELLLANEOUS)	= ASTM A36 (36KSI)
STEEL HSS (RECTANGLE)	= ASTM A500 (46KSI)
STEEL HSS (ROUND)	= ASTM A500 (42KSI)
STEEL PIPES	= ASTM A501 (36KSI) − OR − ASTM A53 (35KSI), TYPE E OR S

NOTE: ALL 36KSI STEEL MAY BE SUBSTITUTED WITH 50KSI STEEL UNLESS NOTED OTHERWISE.

ALL CONSTRUCTION PER LATEST AISC HANDBOOK. ALL REFERENCE TO HEADED STUDS SHALL BE HIGH STRENGTH HEADED STUDS. ATTACHMENT OF HEADED STUDS SHALL CONFORM TO ALL REQUIREMENTS OF THE LATEST EDITION OF THE "RECOMMENDED PRACTICES FOR STUD WELDING" AND THE "STRUCTURAL WELDING CODE" PUBLISHED BY AWS. ALL BOLTS, ANCHOR BOLTS, EXPANSION BOLTS, ETC. SHALL BE INSTALLED WITH STEEL WASHERS AT SLOTTED HOLES IN STEEL SECTIONS. ALL WELDING SHALL BE PERFORMED BY WELDERS HOLDING VALID CERTIFICATES AND HAVING CURRENT EXPERIENCE IN THE TYPE OF WELD SHOWN ON THE DRAWINGS OR NOTES. CERTIFICATES SHALL BE THOSE ISSUED BY AN ACCEPTED TESTING AGENCY. ALL WELDING DONE BY E70 SERIES LOW HYDROGEN RODS UNLESS NOTED OTHERWISE. FOR GRADE 60 REINFORCING BARS, USE E90 SERIES. ALL WELDING PER LATEST AMERICAN WELDING SOCIETY STANDARDS, (EXCEPT STEEL JOISTS AND JOIST GIRDERS SHALL COMPLY WITH SJI STANDARDS). THESE DRAWINGS DO NOT DISTINGUISH BETWEEN SHOP AND FIELD WELDS; THE CONTRACTOR MAY SHOP WELD OR FIELD WELD AT HIS DISCRETION. SHOP WELDS AND FIELD WELDS SHALL BE SHOWN ON THE SHOP DRAWINGS SUBMITTED FOR REVIEW. ALL FULL (COMPLETE) PENETRATION WELDS SHALL BE TESTED AND CERTIFIED BY AN INDEPENDENT TESTING LABORATORY. WHEN STRUCTURAL STEEL IS FURNISHED TO A SPECIFIED MINIMUM YIELD POINT GREATER THAN 36 KSI, THE ASTM OR OTHER SPECIFICATION DESIGNATION SHALL BE INCLUDED NEAR THE ERECTION MARK ON EACH SHIPPING ASSEMBLY OR IMPORTANT CONSTRUCTION COMPONENT, OVER ANY SHOP COAT OF PAINT, PRIOR TO SHIPMENT FROM THE FABRICATOR'S PLANT. STRUCTURAL STEEL COMPONENTS, AND FASTENERS AT ALL EXTERIOR CONDITIONS SHALL BE GALVANIZED OR PROTECTED AGAINST CORROSION USING APPROVED METHOD PUBLISHED BY AISC OR ANSI. WELDS ON GALVANIZED STEEL SHALL FOLLOW AWS D−19.0 SPECIFICATIONS.

STRUCTURAL BOLTS:

ALL STRUCTURAL BOLTS SHALL BE ASTM F3125 GRADE A325 TYPE 1 AND SHALL BE INSTALLED AS BEARING−TYPE CONNECTIONS WITH THREADS INCLUDED IN SHEAR PLANE (I.E. A TYPE "N" CONNECTION) UNLESS NOTED OTHERWISE. USE A325 TYPE 3 BOLTS AT ALL CONNECTIONS EXPOSED TO WEATHERING. USE SC (SLIP CRITICAL) AT ALL MOMENT FRAMES AND BRACED FRAMES. USE ASTM A354 BOLTS WHERE THE BOLT LENGTH REQUIRED FOR THE CONNECTION EXCEEDS THE MINIMUM LENGTH OF AN A325 BOLT. BOLTS MAY BE TIGHTENED USING ANY AISC APPROVED METHOD. ALL STRUCTURAL BOLTING SHALL BE INSPECTED BY AN INDEPENDENT TESTING LABORATORY TO ENSURE BOLT TENSION.

STEEL GRATING:

UNLESS NOTED OTHERWISE IN ARCHITECTURAL SPECIFICATIONS, USE PAINTED (GALVANIZED) STEEL GRATING WITH 2 1/2" X 3/16" BEARING BARS AT 1 3/16" O.C. AND CROSSBARS AT 4" O.C. GRATING SHALL BE ERECTED AND ATTACHED PER MANUFACTURER'S RECOMMENDATIONS.

ROOF DECK:

DECK SHALL BE 1 1/2" DEEP, 36" WIDE, 20 GAGE GALVANIZED STEEL, WITH MINIMUM YIELD STRESS OF 50 KSI, WITH MINIMUM S = 0.237 IN3 AND I = 0.231 IN4 PER FOOT OF WIDTH. DECK SHALL BE ERECTED IN ACCORDANCE WITH MANUFACTURER'S RECOMMENDATIONS AS 1 SPAN MINIMUM AND SHALL BE ATTACHED FOR A MINIMUM DIAPHRAGM SHEAR CAPACITY OF 650 PLF USING THE FOLLOWING MINIMUM ATTACHMENTS:

WELD DECK TO SUPPORTING MEMBERS WITH 4 − 5/8" DIAMETER OR 3/8" X 1" PUDDLE WELDS PER SHEET AT ENDS, END LAPS AND AT INTERMEDIATE SUPPORTS, AND AT 24" O.C. AT PERIMETER BEAMS AND OPENING EDGES RUNNING PARALLEL TO THE DECK. SIDE SEAM ATTACHMENT SHALL BE VSC2 AT 24" O.C.

CONSTRUCTION JOINTS:

ALL CONSTRUCTION JOINTS IN WALLS SHALL BE KEYED IN ACCORDANCE WITH THE TYPICAL CONSTRUCTION JOINT DETAILS SHOWN ON THE STRUCTURAL DRAWINGS OR, AT THE CONTRACTOR'S OPTION, SHALL BE INTENTIONALLY ROUGHENED IN ACCORDANCE WITH THE FOLLOWING: THE SURFACE OF ROUGHENED JOINTS SHALL BE SAND BLASTED OR ROUGHENED WITH A CHIPPING HAMMER TO EXPOSE THE AGGREGATE EMBEDDED IN THE PREVIOUS POUR. THE EXPOSED AGGREGATE SHALL PROTRUDE A MINIMUM OF 1/4 INCH. ALL SURFACES OF CONSTRUCTION JOINTS SHALL BE CLEANED AND LAITANCE REMOVED. IMMEDIATELY BEFORE NEW CONCRETE IS PLACED, ALL CONSTRUCTION JOINTS SHALL BE WETTED AND STANDING WATER REMOVED. VERTICAL CONSTRUCTION JOINTS IN WALLS SHALL BE HELD TO A MAXIMUM SPACING OF 60'−0". ALL CONSTRUCTION JOINTS IN SLABS, JOISTS, BEAMS, AND GIRDERS SHALL BE OFFSET A DISTANCE EQUAL TO TWICE THE WIDTH OF THE BEAM.

ACCORDANCE WITH THE TYPICAL SLAB ON DECK CONSTRUCTION JOINT DETAIL SHOWN ON THE STRUCTURAL DRAWINGS. BEAMS AND GIRDERS HAVE BEEN DESIGNED ASSUMING THE CONSTRUCTION JOINTS TO BE LOCATED IN THE MIDDLE THIRD OF THE BEAM, GIRDER, OR SLAB SPAN. ALL CONSTRUCTION, CONTROL, AND ISOLATION JOINTS FOR SLABS ON GRADE SHALL BE IN ACCORDANCE WITH THE TYPICAL SLAB ON GRADE DETAILS. THE CONTRACTOR SHALL SUBMIT THE PROPOSED LOCATIONS OF CONSTRUCTION JOINTS TO THE ENGINEER FOR ACCEPTANCE BEFORE STARTING CONSTRUCTION.

ELECTRICAL CONDUIT IN CONCRETE SLABS:

ELECTRICAL CONDUIT SHALL BE RIGID STEEL CONDUIT OR FLEXIBLE PLASTIC CONDUIT. ALUMINUM CONDUIT IS PROHIBITED. CONDUIT WITH A MAXIMUM OUTSIDE DIAMETER OF 1/6 TIMES THE SLAB THICKNESS MAY BE EMBEDDED IN ONE LAYER AT THE MID−DEPTH OF SLABS. MINIMUM CLEAR DISTANCE BETWEEN CONDUITS SHALL BE 3 TIMES CONDUIT DIAMETER. CONDUIT SHALL BE FIRMLY CHAIRED AND TIED TO PREVENT DISPLACEMENT DURING POURING. PLACE #3 AT 12 INCHES O.C. ADDITIONAL REINFORCING ABOVE AND BELOW, PERPENDICULAR TO THE CONDUIT. THE ADDED REINFORCING SHALL EXTEND 1'−0" PAST THE CONDUIT ON BOTH SIDES. FOR CONDUIT PLACED IN SLABS ON METAL DECKING, CONDUIT SHALL RUN IN THE METAL DECK FLUTES PER THE TYPICAL CONDUIT IN SLAB ON METAL DECK DETAIL.

CONCRETE INSERTS:

THIN SLAB TYPE INSERTS SHALL BE GALVANIZED AND HAVE THE FOLLOWING MINIMUM WORKING LOADS(A 4:1 RATIO OF ULTIMATE TO WORKING VALUES IS ASSUMED):

BOLT DIAMETER	WORKING LOAD SHEAR	TENSION
1/2"	1,000 LBS.	650 LBS.
5/8"	1,250 LBS.	700 LBS.
3/4"	1,600 LBS.	850 LBS.

COIL LOOP INSERTS SHALL BE GALVANIZED AND HAVE THE FOLLOWING MINIMUM WORKING LOADS(A 3:1 RATIO OF ULTIMATE TO WORKING VALUES IS ASSUMED):

BOLT DIAMETER	WORKING LOAD SHEAR	TENSION
1/2"	2,200 LBS.	2,820 LBS.
5/8"	3,000 LBS.	3,620 LBS.
3/4"	3,100 LBS.	3,660 LBS.

THREADED COIL RODS, COIL NUTS, ETC., USED IN CONJUNCTION WITH CONCRETE INSERTS, SHALL HAVE A WORKING LOAD EQUAL TO OR GREATER THAN THE CORRESPONDING CONCRETE INSERT. CONTRACTOR SHALL SUBMIT MANUFACTURER'S SIZE AND STRENGTH DATA PRIOR TO CONSTRUCTION TO THE STRUCTURAL ENGINEER THRU THE ARCHITECT. VALUES LISTED ABOVE ARE FOR RICHMOND STRUCTURAL CONNECTION INSERTS.

EXPANSION AND SCREW ANCHORS:

USE STUD TYPE EXPANSION ANCHOR WITH A SINGLE PIECE WEDGE ONLY WHERE NOTED ON PLANS. IF USE IS REQUESTED FOR OTHER THAN WHERE NOTED CONTACT STRUCTURAL ENGINEER THROUGH ARCHITECT FOR APPROVAL.

CONTRACTOR SHALL SUBMIT MANUFACTURER'S SIZE AND STRENGTH DATA TO ENGINEER THROUGH ARCHITECT PRIOR TO CONSTRUCTION. INSTALL ALL BOLTS AS OUTLINED IN MANUFACTURER'S SPECIFICATIONS, UTILIZING PROPER SIZE AND TYPE OF DRILL, CLEANING HOLE, DRIVING AND TIGHTENING BOLT.

IN CONCRETE:

ANCHORS USED MUST HAVE ICC APPROVAL AND INCLUDE HILTI KWIK BOLT TZ2 (ESR−4266), AND SIMPSON STRONG BOLT−2 (ESR−3037), AND DEWALT POWER−STUD+SD2 (ESR−2502), AND SIMPSON TITEN HD (ESR−2713), HILTI KWIK HUS−EZ (ESR−3027), AND DEWALT SCREW−BOLT+ (ESR−3889) OR APPROVED EQUAL.

IN MASONRY:

ANCHORS USED MUST HAVE ICC APPROVAL AND INCLUDE HILTI KWIK BOLT 3 (ESR−1385), AND SIMPSON STRONG BOLT−2 (ES−240), DEWALT POWER−STUD+SD1 (ESR−2966), HILTI KWIK HUS−EZ (ESR−3056) AND SIMPSON TITEN HD (ESR−1056), AND DEWALT SCREW−BOLT+ (ESR−4042) OR APPROVED EQUAL.

EPOXY ANCHORS IN CONCRETE AND MASONRY:

INJECTABLE ADHESIVE SHALL BE USED FOR INSTALLATION OF REINFORCING STEEL DOWELS OR THREADED ANCHOR RODS AND INSERTS INTO NEW OR EXISTING CONCRETE OR SOLID GROUTED CONCRETE MASONRY UNITS ONLY WHERE SPECIFIED ON PLANS. IF USE IS REQUESTED FOR OTHER THAN WHERE NOTED CONTACT STRUCTURAL ENGINEER THROUGH ARCHITECT FOR APPROVAL. ADHESIVE SHALL BE FURNISHED IN SIDE BY SIDE PACKS WHICH KEEP COMPONENT A AND COMPONENT B SEPARATE. USE ONLY INJECTION TOOLS AND STATIC MIXING NOZZLES RECOMMENDED BY MANUFACTURER. MANUFACTURER'S INSTRUCTIONS SHALL BE FOLLOWED.

IN CONCRETE:

ANCHORS USED MUST HAVE I.C.C. APPROVAL IN CRACKED CONCRETE AND INCLUDE SIMPSON SET−XP (ESR−2508), HILTI HIT−RE500−V3 (ESR−3814), DEWALT PURE110+ (ESR−3298) OR APPROVED EQUIVALENT. THE USE OF ANY EPOXY ANCHOR MUST BE APPROVED BY THE ENGINEER OF RECORD PRIOR TO INSTALLATION.

IN MASONRY:

ANCHORS USED MUST HAVE ICC APPROVAL AND INCLUDE SIMPSON SET (ESR−1772) AND HILTI HIT−HY 270 MAX (ESR−4143) AND DEWALT AC100+GOLD (ESR−3200) OR APPROVED EQUIVALENT. THE USE OF ANY EPOXY ANCHOR MUST BE APPROVED BY THE ENGINEER OR RECORD PRIOR TO INSTALLATION.

1. ADHESIVE ANCHORS INSTALLED IN HORIZONTAL TO VERTICALLY OVERHEAD ORIENTATION TO SUPPORT SUSTAINED TENSION LOADS SHALL BE DONE BY A CERTIFIED ADHESIVE ANCHOR INSTALLER (AAI) AS CERTIFIED THROUGH ACI (ACI 318−11 D.9.2.2) / (ACI 318−14 17.8.2.2) / (ACI 318−19 17.2.3) PROOF OF CURRENT CERTIFICATION SHALL BE SUBMITTED TO THE ENGINEER FOR APPROVAL PRIOR TO COMMENCEMENT OF INSTALLATION.
2. ADHESIVE ANCHORS MUST BE INSTALLED IN CONCRETE AGED A MINIMUM OF 21 DAYS (ACI 318−11 D.2.2) / (ACI 318−14 17.1.2) / (ACI 318−19 17.2.2).
3. THE REMOVAL AND RESETTING OF POST INSTALLED ANCHORS IS PROHIBITED (ACI 318−19 17.3.1).
4. PROVIDE SPECIAL INSPECTION FOR ALL MECHANICAL AND ADHESIVE ANCHORS PER THE APPLICABLE BUILDING CODE AND PER THE CURRENT ICC−ES REPORT (IBC 2012, 2015, 2018 TABLE 1705.3 TYPE 4, NOTE B).

STRUCTURAL FILL:

ALL FILL PLACED TO SUPPORT SLABS ON GRADE, BEHIND PERMANENT WALLS, AND AROUND ALL DRAINS SHALL CONSIST OF WELL GRADED, GRANULAR MATERIAL PER THE SPECIFICATIONS. SOILS FOR STRUCTURAL FILL SHALL BE APPROVED BY THE GEOTECHNICAL ENGINEER. STRUCTURAL FILL SHALL BE PLACED ON SOUND NATIVE MATERIAL. PROOF−ROLL CUT AREAS WHICH PROVIDE SUPPORT FOR PERMANENT STRUCTURES. AREAS WHICH ARE EXCESSIVELY YIELDING, AS DETERMINED BY THE CONTINUOUS OBSERVATION OF THE GEOTECHNICAL ENGINEER, SHALL BE OVEREXCAVATED AND REPLACED WITH STRUCTURAL FILL. STRUCTURAL FILL SHALL BE PLACED PER THE SPECIFICATION. USE LEAN CONCRETE FILL BELOW ALL PIPES EXISTING OUT OF BASEMENT WALL, FULL HEIGHT OF WALL. CONCRETE SHALL CONTAIN 2 SACKS OF CEMENT PER YARD.

LATERAL PRESSURE ON SUBGRADE WALLS:

THE DESIGN PRESSURES FOR SUBGRADE WALLS ARE BASED ON A "DRAINED" CONDITION. SEE CIVIL AND MECHANICAL DRAWINGS FOR SUBGRADE DRAINAGE SYSTEM. SEE GEOTECHNICAL REPORT FOR COMPACTION REQUIREMENTS AT SUBGRADE WALLS. SUBGRADE WALLS AND SUPPORTING SLABS SHALL HAVE ATTAINED THEIR FULL CONCRETE STRENGTH BEFORE PLACING ANY BACKFILL U.N.O. THE CONTRACTOR SHALL PROVIDE TEMPORARY BRACES FOR WALLS IF BACKFILL IS PLACED BEFORE WALLS AND SLABS ACHIEVE FULL CONCRETE STRENGTH.

NOTES ON CRACKING OF CONCRETE STRUCTURES:

CRACKING IS INHERENT TO THE MATERIAL PROPERTIES OF CONCRETE CONSTRUCTION (INCLUDING POST−TENSIONED CONCRETE STRUCTURES). WHILE EVERY EFFORT HAS BEEN MADE TO MINIMIZE THE EFFECTS OF UNSIGHTLY CRACKING, THE PRESENCE OF CRACKS ARE NORMAL AND UNAVOIDABLE. THE DESIGN OF THE CONCRETE STRUCTURAL ITEMS HAVE BEEN ANALYZED USING A "CRACKING SECTION." THE PRESENCE OF THE CRACKING SHOULD NOT BE CONSIDERED DETRIMENTAL TO THE STRUCTURE. CRACKS LARGER THAN 10 MILS SHALL BE FILLED AND SEALED WITH AN APPROVED CRACK FILLER TO PREVENT FUTURE DETERIORATION. ALLOWANCE SHALL BE MADE IN THE CONSTRUCTION BUDGET FOR SEALING OF SUCH CRACKS. IN SOME CASE, CRACKS DO NOT APPEAR UNTIL WELL AFTER CONSTRUCTION HAS BEEN COMPLETED. IT IS THE RESPONSIBILITY OF THE OWNER TO MAINTAIN THE STRUCTURE PROPERLY OVER THE LIFE OF THE STRUCTURE. CONCRETE CRACKS, SHOULD THEY OCCUR, SHALL BE FILLED AND SEALED TO PREVENT PREMATURE DETERIORATION OF THE STRUCTURE.

STRUCTURAL SHEET INDEX

SHEET	DESCRIPTION
S1.1	GENERAL STRUCTURAL NOTES
S1.2	GENERAL STRUCTURAL NOTES
S1.3	TYPICAL DETAILS
S1.4	TYPICAL DETAILS
S1.5	TYPICAL DETAILS
S1.6	TYPICAL DETAILS
S1.7	TYPICAL DETAILS
S2.00	FOUNDATION PLAN
S2.01	FRAMING PLAN
S2.10	FRAMING PLAN
S3.1	FOUNDATION DETAILS
S3.2	FOUNDATION DETAILS
S3.3	FRAMING DETAILS
S4.1	FRAMING DETAILS
S4.2	FRAMING DETAILS

NO	BY	DATE	REVISIONS	DATE	APP.

Registered Professional Engineer
CERTIFICATE NO.
70374
JAMES APPLEYARD
10/31/25
Date Signed
ARIZONA, U.S.A.

THESE DRAWINGS ARE THE PROPERTY OF P.A.C.E. AND SHALL NOT BE REPRODUCED IN ANY MANNER NOR BE USED FOR CONSTRUCTION UNLESS STAMPED "ISSUED FOR CONSTRUCTION".

PREPARED BY: PKA
DESIGNED BY: JA
DRAWN BY: NS
CHECKED BY: JA
SCALE: AS NOTED
DATE: SEP 2025
JOB NO.: 23364

TITLE: GENERAL STRUCTURAL NOTES

JOB: TOWN OF JEROME WASTEWATER TREATMENT PLANT — YAVAPAI AZ

ISSUED FOR BID

PREPARED BY: TAYLOR B. PIERCE — R.C.E 70097 — DATE

PACE
Advanced Water Engineering
8723 E. Via de Ventura, Suite J | Scottsdale, CA 85258
P: (480) 991-3995 | www.paceadvisor.com

SHEET S1.1
52 OF 99 SHEETS

JOB NO. 23364

GENERAL STRUCTURAL NOTES

APPLY UNLESS NOTED OTHERWISE

SHOP DRAWINGS:

SHOP DRAWINGS SHALL BE SUBMITTED FOR ALL STRUCTURAL ITEMS IN ADDITION TO ITEMS REQUIRED BY ARCHITECTURAL SPECIFICATIONS.

THE CONTRACTOR SHALL REVIEW ALL SHOP DRAWINGS PRIOR TO SUBMITTAL. ITEMS NOT IN ACCORDANCE WITH CONTRACT DOCUMENTS SHALL BE FLAGGED UPON HIS REVIEW.

VERIFY ALL DIMENSIONS WITH ARCHITECTURAL DRAWINGS AND ALL FINISHED GRADE WITH CIVIL DRAWINGS.

ANY CHANGES, SUBSTITUTIONS, OR DEVIATIONS FROM CONTRACT DOCUMENTS SHALL BE CLOUDED BY MANUFACTURER OR FABRICATOR. ANY OF THE AFOREMENTIONED WHICH ARE NOT CLOUDED OR FLAGGED BY SUBMITTING PARTIES, SHALL NOT BE CONSIDERED APPROVED AFTER ENGINEER'S REVIEW, UNLESS NOTED ACCORDINGLY.

THE ENGINEER HAS THE RIGHT TO APPROVE OR DISAPPROVE ANY CHANGES TO CONTRACT DOCUMENTS AT ANYTIME BEFORE OR AFTER SHOP DRAWING REVIEW.

THE SHOP DRAWINGS DO NOT REPLACE THE CONTRACT DOCUMENTS. ITEMS OMITTED OR SHOWN INCORRECTLY AND ARE NOT FLAGGED BY THE STRUCTURAL ENGINEER OR ARCHITECT ARE NOT TO BE CONSIDERED CHANGES TO CONTRACT DOCUMENTS. IT IS THE CONTRACTOR'S RESPONSIBILITY TO MAKE SURE ITEMS ARE CONSTRUCTED PER THE CONTRACT DOCUMENTS.

THE ADEQUACY OF ENGINEERING DESIGNS AND LAYOUT PERFORMED BY OTHERS RESTS WITH THE DESIGNING OR SUBMITTING AUTHORITY.

REVIEWING IS INTENDED ONLY AS AN AID TO THE CONTRACTOR IN OBTAINING CORRECT SHOP DRAWINGS. RESPONSIBILITY FOR CORRECTNESS SHALL REST WITH THE CONTRACTOR.

GENERAL:

ENTIRE CONTRACT DOCUMENTS SHALL BE USED TO CONSTRUCT BUILDING. SOME CRITICAL ITEMS REQUIRED BY OTHER DISCIPLINES MAY NOT BE SHOWN ON STRUCTURAL DRAWING (I.E. WALL, FLOOR AND ROOF OPENINGS, ARCHITECTURAL, MECHANICAL AND PLUMBING LOADS, SUPPORT PLATES ETC.)

ITEMS SHOWN BY OTHER DISCIPLINES WITH REFERENCE TO STRUCTURAL DRAWING BUT NOT SHOWN ON THESE STRUCTURAL DOCUMENTS SHALL BE CONSIDERED DESIGN BUILD ITEMS. CONTRACTOR SHALL SUBMIT DESIGN BY OTHERS FOR REVIEW.

THE STRUCTURAL CONSTRUCTION DOCUMENTS REPRESENT THE FINISHED STRUCTURE. THEY DO NOT INDICATE THE METHOD OF CONSTRUCTION. THE CONTRACTOR SHALL PROVIDE ALL MEASURES NECESSARY TO PROTECT THE STRUCTURE DURING CONSTRUCTION. SUCH MEASURES SHALL INCLUDE, BUT NOT BE LIMITED TO, BRACING, SHORING FOR LOADS DUE TO CONSTRUCTION EQUIPMENT, ETC. THE STRUCTURAL ENGINEER SHALL NOT BE RESPONSIBLE FOR THE CONTRACTOR'S MEANS, METHODS, TECHNIQUES, SEQUENCES FOR PROCEDURE OF CONSTRUCTION, OR THE SAFETY PRECAUTIONS AND THE PROGRAMS INCIDENT THERETO (NOR SHALL OBSERVATION VISITS TO THE SITE INCLUDE INSPECTION OF THESE ITEMS).

CONSTRUCTION MATERIALS SHALL BE SPREAD OUT IF PLACED ON FRAMED CONSTRUCTION. LOAD SHALL NOT EXCEED THE DESIGN LIVE LOAD PER SQUARE FOOT.

WHERE REFERENCE IS MADE TO VARIOUS TEST STANDARDS FOR MATERIALS, SUCH STANDARDS SHALL BE THE LATEST EDITION AND/OR ADDENDA.

ESTABLISH AND VERIFY ALL OPENINGS AND INSERTS FOR ARCHITECTURAL, MECHANICAL, PLUMBING AND ELECTRICAL WITH APPROPRIATE TRADES, DRAWINGS AND SUBCONTRACTORS PRIOR TO CONSTRUCTION.

OPTIONS ARE FOR CONTRACTOR'S CONVENIENCE. IF THE CONTRACTOR CHOOSES AN OPTION, THE CONTRACTOR SHALL BE RESPONSIBLE FOR ALL NECESSARY CHANGES AND SHALL COORDINATE ALL DETAILS.

NOTES AND DETAILS ON DRAWINGS SHALL TAKE PRECEDENCE OVER GENERAL STRUCTURAL NOTES AND TYPICAL DETAILS. WHERE NO DETAILS ARE SHOWN, CONSTRUCTION SHALL CONFORM TO SIMILAR WORK ON THE PROJECT.

ALL DIMENSIONS SHOWN (INCLUDING ELEVATIONS) ON STRUCTURAL DRAWINGS ARE TO ASSIST CONTRACTOR IN VERIFICATION. SCALING DIMENSIONS FROM DRAWINGS IS NOT PERMITTED. LOCATION OF ALL ITEMS SHALL BE DETERMINED BY DIMENSIONS OR NOTES ONLY; DO NOT USE GRAPHIC APPEARANCE TO ASSUME SPECIFIC LOCATIONS.

CONTRACTOR SHALL BE RESPONSIBLE FOR VERIFICATION OF ALL DIMENSIONS WITH ARCHITECTURAL AND FINISHED GRADE WITH CIVIL DRAWINGS PRIOR TO START OF CONSTRUCTION. RESOLVE ANY DISCREPANCY WITH THE ARCHITECT.

TYPICAL DETAILS MAY NOT NECESSARILY BE CUT ON PLANS, BUT APPLY UNLESS NOTED OTHERWISE.

WHERE DISCREPANCIES OCCUR BETWEEN PLANS, DETAILS, GENERAL STRUCTURAL NOTES AND SPECIFICATIONS, THE GREATER REQUIREMENTS SHALL GOVERN.

ANY ENGINEERING DESIGN, PROVIDED BY OTHERS AND SUBMITTED FOR REVIEW, SHALL BEAR THE SEAL OF AN ENGINEER REGISTERED IN THE STATE OF JURISDICTION.

SUPPLIER OF ENGINEERED STRUCTURAL COMPONENTS (I.E. STEEL JOISTS, STAIRS, PRECAST ITEMS) SHALL BE RESPONSIBLE FOR COMPLETE DESIGN AND SHALL USE ENTIRE CONTRACT DOCUMENTS TO INCLUDE ALL LOADS AND DETAIL REQUIREMENTS FROM ALL DISCIPLINES. SUPPLIER SHALL PROVIDE ADDITIONAL MATERIAL REQUIRED TO MEET ALL THEIR REQUIREMENTS FOR INSTALLATION (I.E. WIDER BEARING PLATES, SHIMS, ERECTION BOLTS ETC.).

STRUCTURAL STEEL SUPPLIER SHALL FURNISH BOLTS FOR OSHA CONNECTIONS (SEE DRAWINGS FOR DETAILS).

WALL SHORING SHALL BE INSTALLED PRIOR TO BACKFILLING BEHIND ALL BUILDING RETAINING WALLS, UNLESS ALL RESTRAINING SLABS ARE INSTALLED. USE HANDTAPPING ONLY WHEN WITHIN 8'–0", OR WITHIN HALF THE WALL HEIGHT OF BACKFILLED WALL.

CONTINUOUS FOUNDATION DRAIN PIPES (FRENCH DRAINS) OR WEEP HOLES SHALL BE PROVIDED BEHIND ALL BASEMENT WALLS AND ALL EXTERIOR RETAINING WALLS THAT RETAIN MORE THAN 3'–0" OF SOIL. WEEP HOLES WHERE USED SHALL BE 2" IN DIAMETER AT 6'–0" O.C. MAXIMUM.

BUILDING TOLERANCES:

STANDARD TOLERANCES SHALL BE BASED ON THE REQUIREMENTS OF THE AISC CODE OF STANDARD PRACTICE AND ACI 117, STANDARD SPECIFICATIONS FOR TOLERANCES FOR CONCRETE CONSTRUCTION AND MATERIALS.

SEQUENCING CONSTRUCTION AND LATERAL STABILITY:

THE STRUCTURAL COMPONENTS BY THEMSELVES ARE A NON–SELF–SUPPORTING STRUCTURE. LATERAL FORCES DUE TO WIND, EARTHQUAKE, OR SOIL ARE CARRIED BY THE ROOF AND FLOOR DIAPHRAGMS TO THE LATERAL SYSTEM. CERTAIN ELEMENTS SHOWN ON OR LOCAL STABILITY OF OTHER ELEMENTS (SUCH AS BEAMS, COLUMNS, AND WALLS). IF, DUE TO SEQUENCING OF CONSTRUCTION, THESE STABILITY ELEMENTS ARE NOT IN PLACE, THE CONTRACTOR SHALL RETAIN A LICENSED STRUCTURAL ENGINEER WHO SHALL INVESTIGATE WHERE TEMPORARY SHORING/BRACING IS REQUIRED, AND SHALL DESIGN THIS TEMPORARY SHORING/BRACING. THE CONTRACTOR SHALL PROVIDE THIS SHORING/BRACING UNTIL THE REQUIRED STRUCTURAL ELEMENTS AND THEIR CONNECTIONS HAVE BEEN INSTALLED AND REACH THEIR FINAL DESIGN STRENGTHS.

MISCELLANEOUS:

REFER TO ARCHITECTURAL, MECHANICAL, ELECTRICAL, CIVIL, ELEVATOR, OR OTHER SPECIALTY ENGINEERING DRAWINGS FOR DIMENSIONS NOT SHOWN, INCLUDING BUT NOT LIMITED TO: SIZE AND LOCATION OF CURBS, EQUIPMENT HOUSEKEEPING PADS, WALL AND FLOOR OPENINGS, BLOCKOUTS, FLOOR DEPRESSIONS, SUMPS, DRAINS, ANCHOR BOLTS, EMBEDDED ITEMS, ARCHITECTURAL TREATMENT, ETC. CONTRACTOR SHALL VERIFY DIMENSIONS AND RESOLVE DISCREPANCIES OR CONFLICTS PRIOR TO CONSTRUCTION. WHERE SECTIONS ARE INDICATED ON THE PLAN BY A NUMBER AND A DRAWING NUMBER THUS, 1/S5.01, THE INDICATED SECTION (1) IS SHOWN ON STRUCTURAL DRAWING S5.01.

ALL WINDOW SYSTEMS SHALL BE DESIGNED TO ACCOMMODATE VERTICAL DEFLECTION OF THE STRUCTURE OF 1/2" MINIMUM LIVE LOAD DEFLECTION, UNLESS GREATER VALUE IS NOTED ON PLANS OR DETAILS.

FLOOR FLATNESS/LEVELNESS SHALL MEET ARCHITECTURAL SPECIFICATIONS (1/4" IN 10 FOOT MINIMUM LEVELNESS UNLESS TIGHTER REQUIREMENT IN SPECIFICATIONS) IN HEIGHT FOR ALL STRUCTURAL SYSTEMS. CONTRACTOR SHALL INCLUDE COST FOR LEVELING ALL FLOORS. FOR ESTIMATING PURPOSES ONLY, ASSUME 1/2" THICK LEVELING AGENT OVER 15% OF FLOOR AREA.

FABRICATOR APPROVAL:

SPECIAL INSPECTIONS NOTED ABOVE APPLY TO SHOP FABRICATED ASSEMBLIES IN ADDITION TO ON–SITE WORK UNLESS THE FABRICATOR IS AN "APPROVED FABRICATOR" AS DEFINED IN 2022 CBC.

STRUCTURAL OBSERVATION:

ENGINEER OF RECORD SHALL PROVIDE VISUAL OBSERVATION OF THE STRUCTURAL SYSTEM, FOR GENERAL CONFORMANCE TO THE APPROVED PLANS AND SPECIFICATIONS, AT SIGNIFICANT CONSTRUCTION STAGES AND AT THE COMPLETION OF THE STRUCTURAL SYSTEM. CONTRACTOR IS REQUIRED FOR COORDINATING THE TIMING OF SITE VISITS AND SHALL INCLUDE A MINIMUM OF 3 VISITS. THESE VISITS ARE TO BE PAID BY THE CONTRACTOR. STRUCTURAL OBSERVATION DOES NOT INCLUDE OR WAIVE THE RESPONSIBILITY FOR THE INSPECTIONS REQUIRED BY THE BUILDING CODE (NOTED ABOVE).

INSTRUCTIONS TO BIDDERS CONTINGENCIES:

1. UNDER NO CIRCUMSTANCES SHALL THESE DRAWINGS BE "FINAL BID" UNTIL THE PROJECT IS FULLY PERMITTED.
2. ALL PRELIMINARY PRICING EFFORTS SHALL BE CONSIDERED TO BE ESTIMATES ONLY AND SHALL INCLUDE THE NECESSARY CONTINGENCIES, ALLOWANCES, ALTERNATES, ETC. AS APPROPRIATE TO ACCOUNT FOR MODIFICATIONS AND ADDITIONS THAT WILL OCCUR TO THE DRAWINGS DURING THE FINALIZATION OF THE DESIGN AND PERMITTING.
3. THE OWNER OR CONTRACTOR SHALL UTILIZE THE FOLLOWING MINIMUM CONTINGENCIES FOR EACH OF THE STRUCTURAL ELEMENT COSTS TO BE USED AT THE SOLE DISCRETION OF THE STRUCTURAL ENGINEER:

CONSTRUCTION DOCUMENTS/FINAL BID 3% MINIMUM

ALL OF THE "FINAL BID" CONTINGENCIES NOT USED BY THE STRUCTURAL ENGINEER SHALL BE REFUNDED TO THE OWNER PRIOR TO THE CLOSEOUT OF THE PROJECT.

4. ANY MODIFICATIONS, DELETIONS OR ELIMINATIONS TO THE STRUCTURAL BIDDING AND CONTINGENCY REQUIREMENTS, WITHOUT THE CONSENT OF THE STRUCTURAL ENGINEER, SHALL AUTOMATICALLY INDEMNIFY THE STRUCTURAL ENGINEER OF ANY COSTS THAT MAY ARISE DURING THE DESIGN AND CONSTRUCTION OF THE PROJECT.
5. WHERE DISCREPANCIES OCCUR WITHIN THE DRAWINGS THE CONTRACTOR WILL EITHER RESOLVE THE DISCREPANCIES WITH THE ARCHITECT BEFORE BIDDING OR INCLUDE THE GREATER COST ITEM IN THE BID AND RESOLVE THE DISCREPANCY PRIOR TO CONSTRUCTION.

NOTE TO CONTRACTOR REGARDING PRICING/BIDDING OF CITY SUBMITTAL DRAWINGS:

THESE DRAWINGS HAVE BEEN PREPARED FOR CITY SUBMITTAL, AND ARE NOT TO BE CONSIDERED 100% CONSTRUCTION DOCUMENTS UNTIL CITY PLAN REVIEW HAS BEEN COMPLETED AND FINAL BUILDING PERMIT HAS BEEN ISSUED. IF THESE DOCUMENTS ARE TO BE USED FOR PRICING, BID, OR STEEL MILL ORDER, THE CONTRACTOR SHALL PROVIDE IN THE PROJECT BUDGET AN ALLOWANCE FOR POTENTIAL CHANGES BETWEEN THE CITY SUBMITTAL DRAWINGS AND THE FINAL APPROVED SUBMITTAL AND CONSTRUCTION DOCUMENTS. ADDITIONALLY, MISCELLANEOUS ITEMS MAY NOT BE SHOWN ON THESE DRAWINGS. THESE ITEMS INCLUDE, BUT ARE NOT LIMITED TO, ELEVATOR AND EQUIPMENT SUPPORTS, BLOCKOUTS, ETC. REFER TO ARCHITECTURAL, MECHANICAL, ELECTRICAL, AND OTHER SPECIALTY DRAWINGS FOR ADDITIONAL INFORMATION. THE CONSTRUCTION BUDGET SHALL INCLUDE THESE ITEMS. THE STRUCTURAL ENGINEER WILL NOT BE RESPONSIBLE FOR CHANGE ORDER COSTS INCURRED (INCLUDING DISCARDED MATERIAL COSTS) DUE TO BIDDING OR STEEL MILL ORDER FROM THESE DRAWINGS. CONTACT STRUCTURAL ENGINEER FOR CLARIFICATION IF THE SCOPE AND QUANTITY OF ALLOWANCE TO BE CARRIED IS NOT CLEAR.

CONTRACTOR RESPONSIBILITY:

EACH CONTRACTOR OR SUB–CONTRACTOR RESPONSIBLE FOR THE CONSTRUCTION OF THE WIND AND/OR SEISMIC RESISTING SYSTEM THAT IS LISTED IN THE STATEMENT OF SPECIAL INSPECTIONS SHALL SUBMIT A WRITTEN STATEMENT OF RESPONSIBILITY TO THE BUILDING OFFICIAL AND THE OWNER PRIOR TO THE COMMENCEMENT OF WORK REQUIRING SPECIAL INSPECTION. THE CONTRACTOR'S STATEMENT OF RESPONSIBILITY SHALL CONTAIN ACKNOWLEDGMENT OF AWARENESS OF THE SPECIAL REQUIREMENTS CONTAINED IN THE STATEMENT OF SPECIAL INSPECTIONS.

DEFERRED SUBMITTALS: (PER 2012 IBC 107.3.4.1)

FOR THE PURPOSES OF THIS SECTION, DEFERRED SUBMITTALS ARE DEFINED AS THOSE PORTIONS OF THE DESIGN WHICH ARE NOT SUBMITTED AT THE TIME OF THE APPLICATION AND THAT ARE TO BE SUBMITTED TO THE BUILDING OFFICIAL WITHIN A SPECIFIED PERIOD.

DOCUMENTS FOR DEFERRED SUBMITTAL ITEMS SHALL BE SUBMITTED TO THE PROFESSIONAL IN RESPONSIBLE CHARGE FOR REVIEW. THE CONTRACTOR SHALL FORWARD THE REVIEWED DOCUMENTS TO BUILDING OFFICAL WITH A NOTATION INDICATING THAT THE DEFERRED SUBMITTAL DOCUMENTS HAVE BEEN REVIEWED AND BEEN FOUND TO BE IN GENERAL CONFORMANCE TO THE DESIGN OF THE BUILDING. THE DEFERRED SUBMITTAL ITEMS SHALL NOT BE INSTALLED UNTIL THE DESIGN AND SUBMITTAL DOCUMENTS HAVE BEEN APPROVED BY THE BUILDING OFFICIAL.

DEFERRED SUBMITTAL ITEMS:

ALUMINUM WALKWAY
GRATING
HANDRAILS/STAIRS
SHORING EXCAVATIONS
EQUIPMENT ATTACHMENTS, INCLUDING ADD'L FRAMING REQ'D

SPECIAL INSPECTION:

PER IBC CHAPTER 17, SPECIAL INSPECTION IS REQUIRED FOR THE FOLLOWING ITEMS:

CONCRETE: VERIFICATION AND INSPECTION	CONTINUOUS	PERIODIC	REFERRENCED STANDARD (NOTE 1)	IBC REFERENCE
1. Inspection of reinforcing steel, including prestressing tendons, and placement.	–	X	ACI 318: Ch. 20, 25.2 25.3, 26.6.1–26.6.3	1908.4
2. Reinforcing bar welding:			AWS D1.4 ACI 318: 26.6.4	---
a. Verify weldability of reinforcing bars other than ASTM A706;	–	X		
b. Inspect single–pass fillet welds, maximum 5/16"; and	–	X		
c. Inspect all other welds.	X	–		
3. Inspect anchors to be installed in concrete prior to and during placement of concrete where allowable loads have been increased or where strength design is used.	–	X	ACI 318: 17.8.2	---
4. Inspection of anchors post–installed in hardened concrete members.				---
a. Adhesive anchors installed in horizontally or upwardly inclined orientations to resist sustained tension loads.	X	–	ACI 318: 17.8.2.4	
b. Mechanical anchors and adhesive anchors not defined in 4.a.	–	X	ACI 318: 17.8.2	
5. Verifying use of required design mix.	–	X	ACI318: Ch. 19, 26.4.3, 26.4.4	1904.1, 1904.2 1908.2, 1908.3
6. Prior to concrete placement, fabricate specimens for strength tests, per form slump and air content tests, and determine the temperature of the concrete.	X	–	ASTM C172 ASTM C31 ACI 318: 26.4, 26.12	1908.10
7. Inspection of concrete and shotcrete placement for proper application techniques.	X	–	ACI 318: 26.5	1908.6, 1908.7, 1908.8
8. Verify maintenance of specified curing temperature and techniques.	–	X	ACI 318: 26.5.3–26.5.5	1908.9
9. Inspect prestressed concrete for:			ACI 318: 26.10	
a. Application of prestressing forces; and	X	–		---
b. Grouting of bonded prestressing tendons	X	–		---
10. Inspect erection of precast concrete members.	–	X	ACI 318: Ch. 26.8	---
11. Verification of in–situ concrete strength, prior to stressing of tendons in post–tensioned concrete and prior to removal of shores and forms from beams and structural slab.	–	X	ACI 318: 26.11.2	---
12. Inspect formwork for shape, location and dimensions of the concrete member being formed.	–	X	ACI 318: 26.11.1.2(b)	---

NOTES:
1. WHERE APPLICABLE, SEE ALSO SECTION 1707.1, SPECIAL INSPECTION FOR SEISMIC RESISTANCE.
2. TABLES TAKEN DIRECTLY FROM IBC FOR REFERENCE.

MASONRY INSPECTION TASK	FREQUENCY (a) LEVEL 3	REFERENCE FOR CRITERIA TMS 402	TMS 602	IBC REFERENCE
1. As masonry construction begins, verify that the following are in compliance:				
a. Proportions of site–prepared mortar.	P		ART. 2.1, 2.6A, & 2.6C	
b. Grade, type and size of reinforcement connectors and anchor bolts.	P		ART. 3.4	
c. Sample panel construction.	C		ART. 1.6D	
2. Prior to grouting, verify that the following are in compliance:				
a. Grout space.	C		ART. 3.2D & 3.2F	
b. Placement of reinforcement, connectors, & anchor bolts.	C	SEC. 6.1, 6.3.1, 6.3.6, & 6.3.7	ART. 3.2E & 3.4	
c. Proportions of site–prepared grout.	P		ART. 2.6B & 2.4 G.1.b	
3. Verify compliance of the following during construction:				1705.04, 2104 & 2105
a. Materials and procedures with the approved submittals.	P		ART. 1.5	
b. Placement of masonry units and mortar joint construction.	P		ART. 3.3B	
c. Size and location of structural members.	P		ART. 3.3F	
d. Type, size, and location of anchors, including other details of anchorage of masonry to structural members, frames, or other construction.	C	SEC. 1.2.1(e), 6.2.1, & 6.3.1		
e. Welding of reinforcement.	C	SEC. 6.1.6.1.2		
f. Preparation, construction, and protection of masonry during cold weather (temperature below 40°F (4.4°C) or hot weather (temperature above 90°F (32.2°C).	P		ART. 1.8C & 1.8D	
g. Placement of grout is in compliance.	C		ART. 3.5	
4. Observe preparation of grout specimens, mortar specimens, and/or prisms.	C		ART. 1.4 B.2.a.3, 1.4 B.2.b.3, 1.4 B.2.c.3, 1.4 b.3, & 1.4 B.4	

NOTES:
(a) Frequency refers to the frequency of inspection, which may be continuous during the listed task or periodically during the listed task, as defined in the table.
NR=Not Required, P=Periodic, C=Continuous
(b) Required for the first 5000 sq. ft. (465 sq. m.) of AAC masonry.
(c) Required after the first 5000 sq. ft. (465 sq. m.) of AAC masonry.

STEEL: VERIFICATION AND INSPECTION	CONTINUOUS	PERIODIC	REFERENCED STANDARD (NOTE1)	IBC REFERENCE
1. Material verification of high–strength bolts, nuts and washers:			APPLICABLE ASTM MATERIAL SPECS AISC 360, SEC. A3.3	
a. Identification markings to conform to ASTM standards specified in the approved construction documents.	–	X		
b. Manufacturer's certificate of compliance required.	–	X		
2. Inspection of high–strength bolting: a. Bearing–type connections. AISC 360, Section M2.5 1704.3.3	–	X		
3. Material verification of structural steel: a. Identification markings to conform to ASTM standards specified in the approved construction documents. b. Manufacturers' certified mill test reports.	–	–	AISC 360, SEC. M2.5 ASTM A 6 OR ASTM A 568	
4. Material verification of weld filler materials:			AISC 360, SEC. A3.5	
a. Identification markings to conform to AWS specification in the approved construction documents.	–	–		
b. Manufacturer's certificate of compliance required.	–	–		
5. Inspection of welding:				
a. Structural steel:	–	–		
1) Complete and partial penetration groove welds.	X	–	AWS D1.1	
2) Multipass fillet welds.	X	–	AWS D1.1	
3) Single–pass fillet welds > 5/16"	X	–	AWS D1.1	
4) Single–pass fillet welds = 5/16"	–	X	AWS D1.1	
5) Floor and roof deck welds.	–	X	AWS D1.3	
b. Reinforcing steel:	–	–		
1) Verification of weld ability of reinforcing steel other than ASTM A 706.	–	X	AWS D1.4 ACI 318: 3.5.2	
2) Reinforcing steel–resisting flexural and Axial forces in intermediate and special Moment frames, and boundary elements of Special reinforced concrete shear walls and shear reinforcement.	X	–		
3) Shear reinforcement.	X	–		
4) Other reinforcing steel.	–	X		
6. Inspection of steel frame joint details for compliance with approved construction documents:	–	X		
a. Details such as bracing and stiffening.	–	–		
b. Member locations.	–	–		
c. Application of joint details at each connection.	–	–		

NOTES:
1. WHERE APPLICABLE SEE ALSO SECTION 1701.1, SPECIAL INSPECTION FOR SEISMIC RESISTANCE.
2. TABLES TAKEN DIRECTLY FROM IBC FOR REFERENCE.

STEEL: CONSTRUCTION OTHER THAN STRUCTURAL STEEL: VERIFICATION AND INSPECTION	CONTINUOUS	PERIODIC	REFERENCED STANDARD (NOTE1)	IBC REFERENCE
1. Material verification of cold–formed steel deck: a. Identification markings to conform to ASTM standards specified in the approved construction documents.	–	X	APPLICABLE ASTM MATERIAL STANDARDS	
b. Manufacturer's certified test reports.	–			
2. Inspection of welding:				
a. Cold formed steel deck: 1) Floor and roof deck welds.	–	X	AWS D1.3	
b. Reinforcing steel: 1) Verification of weldability of reinforcing steel other than ASTM A 706.	–	X	ACI 318: 3.5.2	
2) Reinforcing steel resisting flexural and axial forces in intermediate and special moment frames, and boundary elements of special structural walls of concrete and shear reinforcement.	X	–		
3) Shear reinforcement.	–	X	AWS D1.4	
4) Other reinforcing steel.	X	–		

SOILS:				
1. Verify materials below shallow foundations are adequate to achieve the design bearing apacity.	–	X		
2. Verify excavations are extended to proper depth and have reached proper material.	–	X		
3. Perform classification and testing of compacted fill materials.	–	X		
4. Verify use of proper materials, densities and lift thicknesses during placement and compaction of compacted fill.	X	–		
5. Prior to placement of compacted fill, inspect subgrade and verify that site has been properly prepared.	–	X		

Not the responsibility of the structural engineer. Special inspection certificate to be completed by geotechnical engineer.

EXPANSION, SCREW, AND EPOXY BOLTS:				
1. During placement of all expansion, screw, & epoxy bolts, for visual verification of hole diameter and depth and placement of bolt and/or epoxy.	–	X		

DUTIES AND RESPONSIBILITIES OF THE SPECIAL INSPECTOR:

A) THE SPECIAL INSPECTOR SHALL OBSERVE THE WORK ASSIGNED TO BE CERTAIN IT CONFORMS WITH THE APPROVED DESIGN DRAWINGS AND SPECIFICATION.

B) THE SPECIAL INSPECTOR SHALL FURNISH INSPECTION REPORTS TO THE BUILDING OFFICIAL, AND TO THE ENGINEER.

C) UPON COMPLETION OF THE ASSIGNED WORK THE ENGINEER OR ARCHITECT SHALL COMPLETE AND SIGN THE APPROPRIATE FORMS CERTIFYING THAT TO THE BEST OF HIS KNOWLEDGE THE WORK IS IN CONFORMANCE WITH THE APPROVED PLANS AND SPECIFICATIONS AND THE APPLICABLE WORKMANSHIP PROVISIONS OF THE CODE.

PK ASSOCIATES, LLC
6900 E. Belleview Ave. #200
Greenwood Village, Colorado 80111
Phone: (720) 799–1058
Email: cadd@pkastructural.com
Website: www.pkastructural.com

NO	BY	DATE	REVISIONS	DATE	APP.

Registered Professional Engineer (Civil) CERTIFICATE NO. 70374 JAMES APPLEYARD Date Signed 10/31/25 ARIZONA, U.S.A.

PREPARED BY: PKA
DESIGNED BY: JA
DRAWN BY: NS
CHECKED BY: JA
SCALE: AS NOTED
DATE SEP 2025
JOB NO. 23364

THESE DRAWINGS ARE THE PROPERTY OF P.A.C.E. AND SHALL NOT BE REPRODUCED IN ANY MANNER NOR BE USED FOR CONSTRUCTION UNLESS STAMPED "ISSUED FOR CONSTRUCTION".

TITLE: GENERAL STRUCTURAL NOTES

JOB: TOWN OF JEROME WASTEWATER TREATMENT PLANT
YAVAPAI AZ

ISSUED FOR BID

PREPARED BY: PACE Advanced Water Engineering
8723 E. VIA de COMMERICO, SUITE A-204 | SCOTTSDALE, CA 85258
P: (408) 991-3595 | www.pacewater.com
TAYLOR B. PIERCE R.C.E 70097 DATE

SHEET S1.2
53 OF 99 SHEETS
JOB NO. 23364

PK ASSOCIATES, LLC
6900 E. Belleview Ave. #200
Greenwood Village, Colorado 80111
Phone: (720) 799-1058
Email: cadd@pkastructural.com
Website: www.pkastructural.com

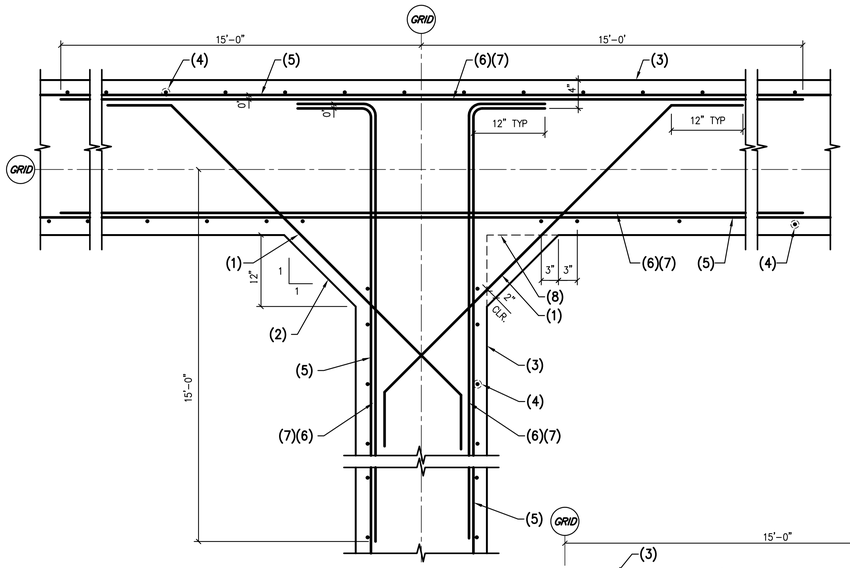

NOTES:
1. #4 AT 6" O.C. (NOT REQ'D AT 06A).
2. CHAMFER AT CORNER.
3. CONCRETE WALL.
4. VERTICAL WALL REINFORCING PER SHEET S3.1.
5. #6 AT 9" O.C. EACH FACE TYPICAL HORIZONTAL WALL REINFORCING. OPTION PROVIDE.
6. PROVIDE ADDITIONAL #6 AT 9" O.C. EACH FACE HORIZONTAL REINFORCING AT CORNERS (NET 4.5" O.C.).
7. PROVIDE ADDITIONAL HORIZONTAL REINFORCING FROM TOP OF WALL DOWN TO 5'-0" ABOVE MAT SLAB.
8. NO CHAMFER AT 06A.

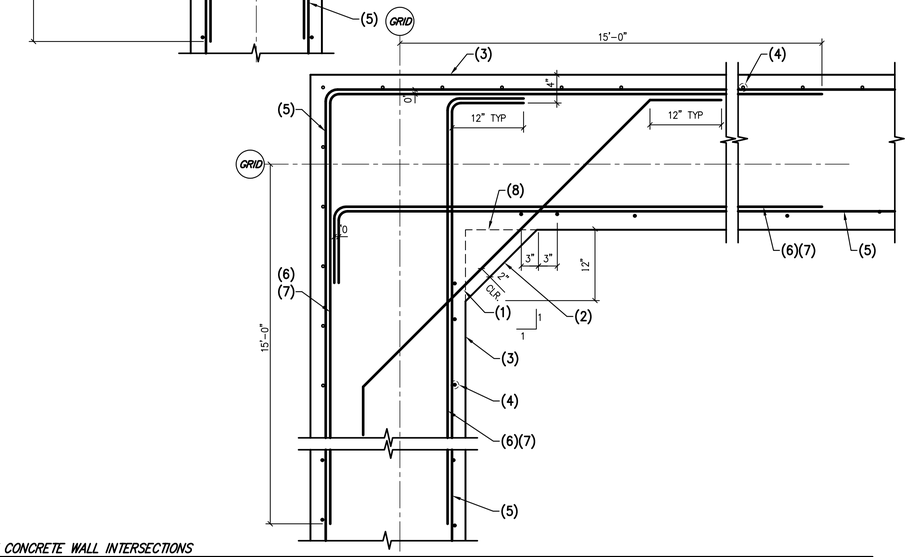

06 PLAN VIEW AT CONCRETE WALL INTERSECTIONS
06A AS NOTED
NO SCALE

BOLT DIAMETER	VERT BOLT EMBEDMENT LENGTH	HORIZ BOLT EMBEDMENT LENGTH	HEADED STUD FILLET WELD SIZE, "S".
1/2"	6"	4"	1/4"
5/8"	6"	4"	5/16"
3/4"	7"	5"	5/16"
7/8"	8"	6"	5/16"
1"	9"	7"	3/8"
1 1/8"	10"	8"	-----
1 1/4"	11"	9"	-----

NOTES:
PROVIDE ANCHORS, ANCHOR BOLTS AND EXPANSION BOLTS PER THIS SCHEDULE UNLESS NOTED ON PLANS OR DETAILS.

EXPANSION OR ADHESIVE BOLTS USED IN MASONRY SHALL HAVE I.C.B.O. APPROVAL IN MASONRY.

AT "ANCHORS" USE 3/16" FILLET WELD("S").

THICKNESS OF DRYPACK DOES NOT APPLY TOWARDS EMBEDMENT.

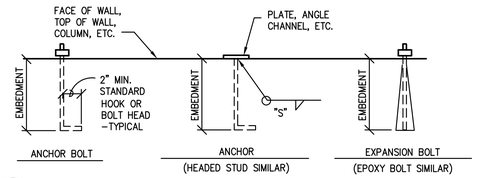

03 TYPICAL ANCHOR, ANCHOR BOLT, AND EXPANSION BOLT SCHEDULE
NO SCALE

STANDARD ASTM A615 (60 KSI) REBAR								
	CLASS B TENSION SPLICE LENGTHS						COMP. BARS	
CONC. PSI	f'c = 2,500 PSI/ f'c = 3,000 PSI		f'c = 4,000 PSI		f'c = 5,000 PSI AND HIGHER		f'c = ALL	
BAR LOCATION	REGULAR CLASS	TOP CLASS	REGULAR CLASS	TOP CLASS	REGULAR CLASS	TOP CLASS	STD LAP	ENCLOSED W/ SPIRAL TIES
SIZE								
#3	24"	31"	19"	24"	17"	22"	12"	12"
#4	32"	41"	25"	33"	23"	29"	15"	12"
#5	39"	51"	31"	41"	28"	36"	19"	14"
#6	47"	61"	37"	49"	34"	43"	23"	17"
#7	69"	89"	54"	71"	49"	63"	26"	20"
#8	78"	102"	62"	81"	56"	72"	30"	23"
#9	88"	115"	70"	91"	63"	81"	34"	25"
#10	100"	129"	79"	102"	70"	92"	38"	29"
#11	110"	143"	87"	113"	78"	102"	42"	32"

NOTES:
1. TOP BARS ARE ANY HORIZONTAL BARS PLACED SO THAT MORE THAN 12" OF FRESH CONCRETE IS CAST IN THE MEMBER BELOW THE REINFORCEMENT.
2. UNLESS NOTED OTHERWISE, LAP SPLICES IN CONCRETE BEAMS, SLABS AND WALLS SHALL BE CLASS "B" TENSION SPLICES. CONCRETE COLUMNS SHALL USE COMPRESSION LAP SPLICES.
3. CONTACT STRUCTURAL ENGINEER IF CENTER TO CENTER SPACING OF REINFORCING IS LESS THAN OR EQUAL TO 3 BAR DIAMETERS, <3db OR 2db CLEAR SPACING BETWEEN BARS.

01 LAP SCHEDULE FOR REINFORCING STEEL
NO SCALE

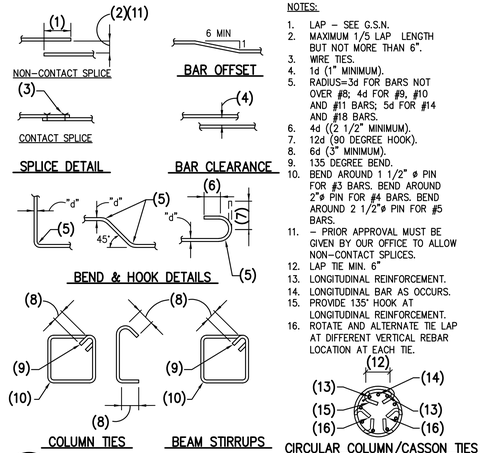

NOTES:
1. LAP – SEE G.S.N.
2. MAXIMUM 1/5 LAP LENGTH BUT NOT MORE THAN 6".
3. WIRE TIES.
4. 1d (1" MINIMUM).
5. RADIUS=3d FOR BARS NOT OVER #8; 4d FOR #9, #10 AND #11 BARS; 5d FOR #14 AND #18 BARS.
6. 4d ((2 1/2" MINIMUM).
7. 12d (90 DEGREE HOOK).
8. 6d (3" MINIMUM).
9. 135 DEGREE BEND.
10. BEND AROUND 1 1/2" ø PIN FOR #3 BARS. BEND AROUND 2"ø PIN FOR #4 BARS. BEND AROUND 2 1/2"ø PIN FOR #5 BARS.
11. – PRIOR APPROVAL MUST BE GIVEN BY OUR OFFICE TO ALLOW NON-CONTACT SPLICES.
12. LAP TIE MIN. 6"
13. LONGITUDINAL REINFORCEMENT.
14. LONGITUDINAL BAR AS OCCURS.
15. PROVIDE 135° HOOK AT LONGITUDINAL REINFORCEMENT.
16. ROTATE AND ALTERNATE TIE LAP AT DIFFERENT VERTICAL REBAR LOCATION AT EACH TIE.

04 TYPICAL CONCRETE REINFORCING BAR DETAILS
NO SCALE

STANDARD ASTM A615 (60 KSI) REBAR							
BAR SIZE	EMBEDMENT		EXTENSION		MINIMUM OUTSIDE DIAMETER OF BEND (INCHES)	CLASS A STRAIGHT BAR DEVELOPMENT	
	3000 PSI CONCRETE	5000 PSI CONCRETE & HIGHER	90° HOOK	180° HOOK		5000 PSI & HIGHER	3000 PSI
#3	6.00	6.00	4.5	2.5	3.00	13	17
#4	7.75	6.00	6.0	2.5	4.00	17	22
#5	9.75	7.50	7.5	2.5	5.00	22	28
#6	11.50	9.00	9.0	3.0	6.00	26	33
#7	13.50	10.50	10.5	3.5	7.00	38	48
#8	15.50	12.00	12.0	4.0	8.00	43	55
#9	17.50	13.50	13.75	4.75	11.28	48	62
#10	19.50	15.25	15.25	5.25	12.70	54	70
#11	21.75	16.75	17.00	5.75	14.10	60	78

NOTES:
1. EMBEDMENT LENGTH IS BASED ON 2 1/2" MINIMUM SIDE COVER AND 2" MINIMUM END COVER.
2. CONTACT STRUCTURAL ENGINEER IF CENTER TO CENTER SPACING OF REINFORCING IS LESS THAN OR EQUAL TO 3 BAR DIAMETERS <3db OR 2db CLEAR SPACING BETWEEN BARS.
3. WHERE CLEAR COVER <db, MULTIPLY EMBEDMENT AND STRAIGHT BAR DEVELOPMENT BY 1.5.

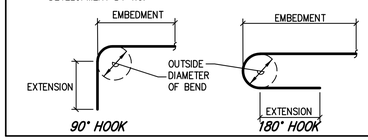

02 HOOKED DOWEL DEVELOPMENT LENGTH IN TENSION (INCHES)
NO SCALE

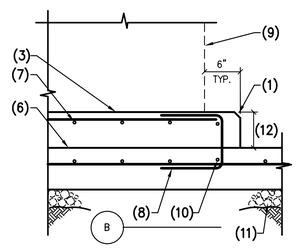

NOTES:
1. CHAMFER EDGES.
2. CONCRETE SLAB OR FINISHED GRADE WHERE OCCURS.
3. CONCRETE EQUIPMENT SLAB.
4. #4 AT 12" O.C. EACH WAY, TOP AND BOTTOM.
5. AT ABUTTING CONCRETE SLABS, INSTALL 1/2" EXPANSION JOINT MATERIAL ALL ROUND.
6. CONCRETE SLAB (ON GRADE AS SOIL OCCURS).
7. #4 AT 12" O.C. EACH WAY.
8. #3 AT EACH CORNER AND AT 48" O.C. MAX. x 6" 6" 6"
9. EDGE OF MECH'L UNIT.
10. #3 AT BEND, TYP.
11. SOIL AS OCCURS.
12. 4" MIN. VARIES AS REQ'D WHEN OVER A SLOPED SLAB.

08 CONCRETE EQUIPMENT PAD
NO SCALE

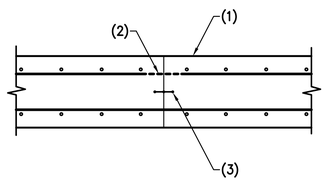

NOTES:
1. CONCRETE WALL.
2. CUT EVERY OTHER BAR ON EACH FACE OF WALL. STAGGER CUT BARS.
3. CONT. WATERSTOP, GREENSTREAK PVC RIBBED WITH CENTER BULB, MODEL #735 PER MECH'L, (OR APPROVED EQUAL.)

NOTE:
LOCATION OF VERTICAL WALL C.J. TO BE AT A MAXIMUM OF TWICE THE WALL HEIGHT.

07 PLAN – WALL C.J.
NO SCALE

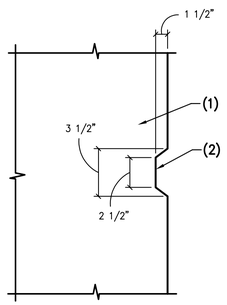

NOTES:
1. CONCRETE.
2. KEYED JOINT – REMOVE FORM MATERIAL PRIOR TO PLACING ADJACENT CONCRETE.

NOTE:
ALL DIMENSIONS ARE ± 1/2".

05 TYPICAL KEY IN CONCRETE
NO SCALE

NO	BY	DATE	REVISIONS	DATE	APP.

Registered Professional Engineer (Civil) CERTIFICATE NO. 70374 JAMES APPLEYARD 10/31/25 Date Signed ARIZONA, U.S.A.

PREPARED BY: PKA
DESIGNED BY: JA
DRAWN BY: NS
CHECKED BY: JA
DATE: SEP 2025
JOB NO.: 23364
SCALE: AS NOTED

TITLE: TYPICAL DETAILS

THESE DRAWINGS ARE THE PROPERTY OF P.A.C.E. AND SHALL NOT BE REPRODUCED IN ANY MANNER NOR BE USED FOR CONSTRUCTION UNLESS STAMPED "ISSUED FOR CONSTRUCTION".

JOB: TOWN OF JEROME WASTEWATER TREATMENT PLANT YAVAPAI AZ

ISSUED FOR BID

PREPARED BY: PACE Advanced Water Engineering
8723 E. VIA de VENTURA, SUITE 210, SCOTTSDALE, CA 85258
P: (480) 991-3995 | www.pacewater.com
TAYLOR B. PIERCE R.C.E 70097 DATE

SHEET S1.3
54 OF 99 SHEETS

JOB NO. 23364

PK ASSOCIATES, LLC
6900 E. Belleview Ave. #200
Greenwood Village, Colorado 80111
Phone: (720) 799-1058
Email: cadd@pkastructural.com
Website: www.pkastructural.com

NO	BY	DATE	REVISIONS	DATE	APP.

THESE DRAWINGS ARE THE PROPERTY OF P.A.C.E. AND SHALL NOT BE REPRODUCED IN ANY MANNER NOR BE USED FOR CONSTRUCTION UNLESS STAMPED "ISSUED FOR CONSTRUCTION".

NOMINAL BEAM DEPTH "D"	NUMBER OF 1" DIA. ASTM, F3125 BOLTS
UP TO 7"	2
8" – 11"	2
12" – 14"	3
15" – 17"	4
18" – 20"	5
21" – 23"	6
24" – 29"	7
30" – 32"	8
33" – 35"	9
36"	10

FRAMING NOTES:

1. THE TYPICAL STEEL BEAM TO STEEL COLUMN OR STEEL BEAM TO STEEL BEAM CONNECTION CONSISTS OF 3/8" SINGLE SHEAR PLATES WITH 1"ø. ASTM F3125 BOLTS. USE 5/8" SHEAR PLATES WHERE "D" = 27" OR GREATER.
2. ALL BOLTS SHALL BE INSTALLED USING SHORT SLOTTED HOLES IN EITHER THE BEAM WEB OR THE SHEAR PLATE PER LATEST AISC SPECIFICATIONS.

18 BOLT SCHEDULE FOR TYPICAL STEEL CONNECTIONS
NO SCALE

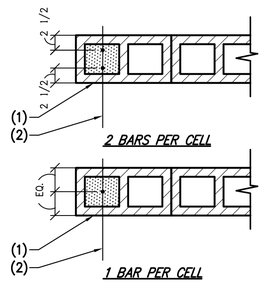

NOTES:

1. MASONRY WALL.
2. VERTICAL WALL REINFORCING.

NOTE:
SEE PLANS AND/OR TYPICAL DETAILS FOR NUMBER OF CELLS REINFORCED (GREATER REQUIREMENT GOVERNS).

15 TYPICAL REINFORCING PLACEMENT – EACH FACE
NO SCALE

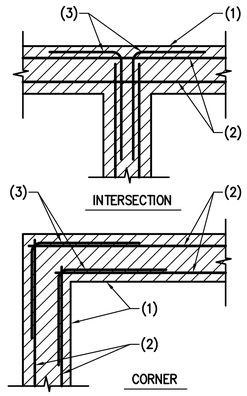

NOTES:

1. MASONRY WALL.
2. BOND BEAM REINFORCING.
3. CORNER BARS SAME SIZE AND SPACING AS HORIZONTAL REINFORCING – LAP PER G.S.N. (24" MINIMUM).

12 MASONRY BOND BEAM AT INTERSECTING WALLS
NO SCALE

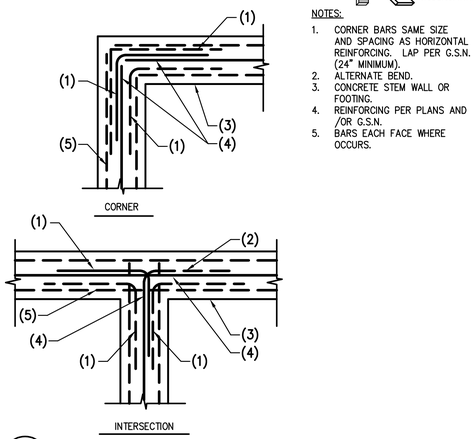

NOTES:

1. CORNER BARS SAME SIZE AND SPACING AS HORIZONTAL REINFORCING. LAP PER G.S.N. (24" MINIMUM).
2. ALTERNATE BEND.
3. CONCRETE STEM WALL OR FOOTING.
4. REINFORCING PER PLANS AND /OR G.S.N.
5. BARS EACH FACE WHERE OCCURS.

07 PLAN – CORNER REINFORCING IN CONCRETE GRADE BEAM WALL AND/OR FOOTING
NO SCALE

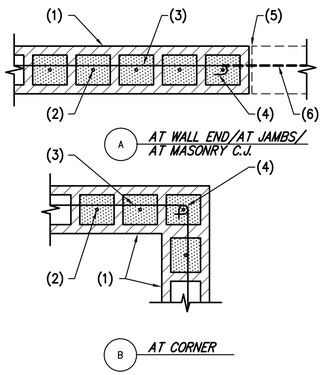

NOTES:

1. MASONRY WALL.
2. VERT. REINF. PER SCHEDULE.
3. HORIZ. REINF. PER SCHEDULE.
4. STANDARD HOOK PER TYP. DETAIL AT ENDS OF ALL WALLS.
5. MASONRY WALL AT C.J. AS OCCURS.
6. HORIZONTAL CONT. AT BOND BEAMS PER DETAIL 15.

16 PLAN VIEW – TYPICAL HORIZONTAL REINF. AT END OF WALL
NO SCALE

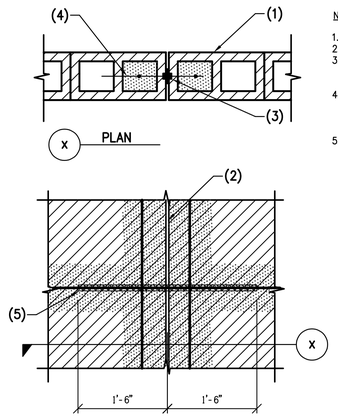

NOTES:

1. MASONRY WALL.
2. CONTROL JOINT.
3. CONTROL JOINT MATERIAL PER ARCHITECTURAL DRAWINGS AND SPECIFICATIONS.
4. 1 VERTICAL BAR EACH SIDE IN SOLID GROUTED CELLS TO MATCH VERTICAL WALL REINFORCING.
5. CONTINUOUS BOND BEAM BARS – WRAP BARS WITH MASTIC FOR BOND BREAK.

NOTE:
BOND BEAM BARS SHALL NOT BE LAPPED WITHIN 8'–0" OF CONTROL JOINT.

13 CONTROL JOINT IN MASONRY WALL
NO SCALE

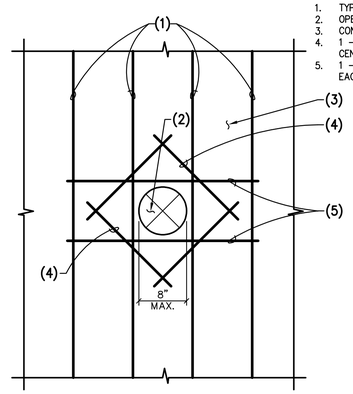

NOTES:

1. TYPICAL WALL REINF.
2. OPENING IN CONCRETE WALL.
3. CONCRETE WALL.
4. 1 – #5 DIAG. BARS IN THE CENTER OF WALL.
5. 1 – #5 TOP AND BOTTOM EACH FACE.

10 TYPICAL SMALL OPENING IN CONCRETE WALL
NO SCALE

H	t	VERTICAL WALL REINFORCING		T	HEEL	TOE	FOOTING HEEL REINF.	SHEAR KEY		REMARKS
		WALL	DOWELS					Sd	Sw	
0'–0" TO 3'–0"	8"	#5 AT 18" O.C.	---	15"	0'–8"	0'–8"	---	---	---	SEE NOTE 1 & 2
3'–1" TO 5'–0"	8"	#5 AT 18" O.C.	---	12"	1'–1"	1'–1"	#5 AT 18" O.C.	12"	8"	SEE NOTE 1 & 2
5'–1" TO 7'–0"	8"	#5 AT 14" O.C.	---	12"	1'–7"	1'–6"	#5 AT 18" O.C.	24"	8"	SEE NOTE 1 & 2
7'–1" TO 9'–0"	8"	#5 AT 12" O.C.	#6 AT 12" O.C.	14"	2'–2"	2'–0"	#5 AT 12" O.C.	32"	8"	SEE NOTE 1 & 2
9'–1" TO 10'–0"	8"	#5 AT 12" O.C.	#7 AT 12" O.C.	20"	2'–8"	2'–6"	#5 AT 8" O.C.	32"	8"	SEE NOTE 1 & 2

NOTES:

1. USE #4 AT 12" O.C. HORIZONTALS.
2. LAP AND/OR EMBED ALL DOWELS 40 BAR DIAMETERS MINIMUM.

NOTE: REF DETAIL 20 FOR RETAINING WALLS ABOVE 10'–0" TALL

17 CONCRETE RETAINING WALL
NO SCALE

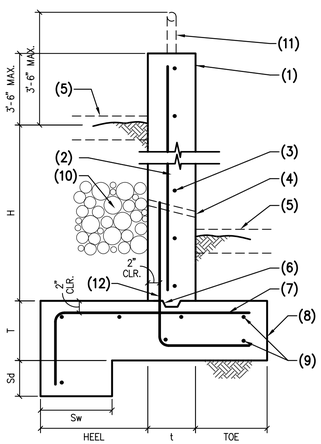

NOTES:

1. CONCRETE WALL.
2. VERTICAL WALL REINFORCING.
3. HORIZONTAL REINFORCING.
4. 1" DIA. WEEP HOLES AT 32" O.C.
5. FINISHED GRADE OR CONCRETE SLAB WHERE OCCURS.
6. CONTINUOUS KEY – SEE TYPICAL KEY IN CONCRETE DETAIL.
7. FOOTING HEEL REINFORCING.
8. CONCRETE FOOTING.
9. #4 AT 16" O.C.
10. 1 1/2" DIA. ROCK IN 12" X 12" X CONTINUOUS ROCK POCKET.
11. HANDRAIL ATTACHMENT BY OTHERS.
12. DOWELS TO MATCH AND LAP WALL REINFORCING U.N.O IN SCHEDULE.

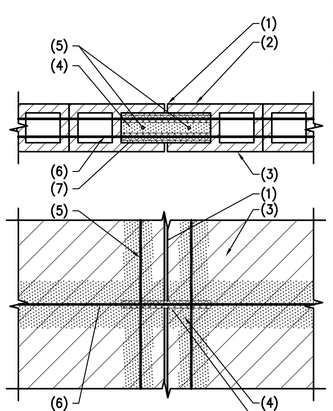

NOTES:

1. RAKE JOINT.
2. OPEN END MASONRY UNIT.
3. MASONRY WALL.
4. GROUT SOLID.
5. VERT. BAR EACH SIDE OF CONTROL JOINT TO MATCH VERT. WALL REINF.
6. HORIZ. REINF. CONT. THRU CONTROL JOINT.
7. WRAP HORIZ. BAR 8" EACH SIDE OF JOINT W/ MASTIC.

14 CONTROL JOINT IN MASONRY BEAM
NO SCALE

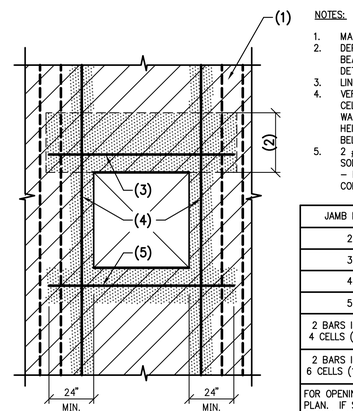

NOTES:

1. MASONRY WALL.
2. DEPTH OF MASONRY LINTEL BEAM – SEE PLANS AND DETAILS.
3. LINTEL REINFORCING.
4. VERTICAL BAR IN GROUTED CELL TO MATCH VERTICAL WALL REINFORCING – FULL HEIGHT OF WALL – SEE SCHEDULE BELOW, ONE BAR PER CELL.
5. 2 #5 BARS IN 8" DEEP SOLID GROUTED BOND BEAM – HOOK BARS UP AT CORNERS.

JAMB BARS	WALL OPENING
2	0'–0" → 4'–0"
3	4'–1" → 8'–0"
4	8'–1" → 10'–0"
5	10'–1" → 12'–0"
2 BARS IN FIRST 4 CELLS (8 BARS)	12'–1" → 16'–0"
2 BARS IN FIRST 6 CELLS (12 BARS)	16'–1" → 20'–0"
FOR OPENINGS LARGER THEN 20'–0" SEE PLAN. IF SPECIAL JAMB BARS ARE NOT SHOWN. USE WALL BRACES TO STRUCTURE.	

11 TYPICAL OPENING IN MASONRY WALL
NO SCALE

Registered Professional Engineer (Civil) CERTIFICATE NO. 70374 JAMES APPLEYARD Date Signed 10/31/25 ARIZONA, U.S.A.

PREPARED BY: PKA
DESIGNED BY: JA
DRAWN BY: NS
CHECKED BY: JA
SCALE: AS NOTED
DATE: SEP 2025
JOB NO.: 23364

TITLE: TYPICAL DETAILS

JOB: TOWN OF JEROME WASTEWATER TREATMENT PLANT YAVAPAI AZ

ISSUED FOR BID

PREPARED BY:
PACE
Advanced Water Engineering
8723 E. Via de Commercio, Suite A, Scottsdale, CA 85258
P: (408) 991-3595 | www.pacewater.com
TAYLOR B. PIERCE R.C.E 70097 DATE

SHEET
S1.4
55 OF 99 SHEETS

JOB NO. 23364

PK ASSOCIATES, LLC
6900 E. Belleview Ave. #200
Greenwood Village, Colorado 80111
Phone: (720) 799-1058
Email: cadd@pkastructural.com
Website: www.pkastructural.com

NOTES:

1. 8" CONCRETE WALL.
2. #7 DOWELS AT 8" O.C.
3. #5 AT 12" VERTICALS.
4. #4 AT 12" HORIZONTALS.
5. 28" MIN.
6. L2x2x1/4 W/ 1/2"ø H.S. AT 18" O.C.
7. GRATING AND ATTACHMENT BY OTHERS.
8. L3x3x1/4 WITH 1/2" HILTI KWIK HUS EZ SCREW ANCHORS AT 24" O.C.
9. CONCRETE FOOTING W/ #5 AT 12" O.C. E.W. TOP & BOTTOM.
10. 1/2"x8"x5" STEEL PLATE WITH 2- 1/2"ø H.S. AT 5" O.C.
11. HANDRAIL AND ATTACHMENT BY OTHERS.
12. CONCRETE SLAB OR FINISHED GRADE AS OCCURS.
13. WATERSTOP PER PACE PER SPECIFICATION SECTION 03 1500.

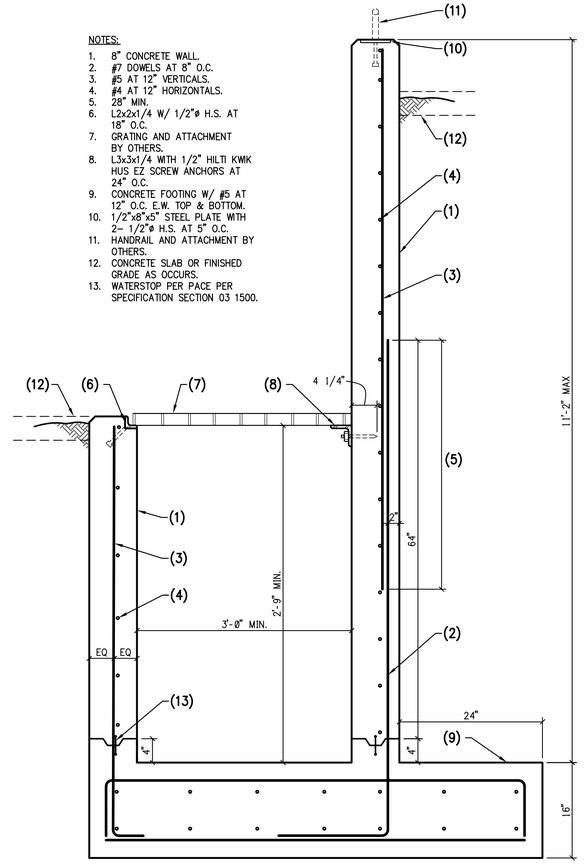

19 *CONCRETE RETAINING WALL AT CHLORINE CONTACT CHANNEL*
NO SCALE

NOTES:

1. 8" CONCRETE WALL.
2. #5 AT 12" O.C.
3. #8 AT 12" O.C.
4. 1" DIA. WEEP HOLES AT 32" O.C.
5. FINISHED GRADE OR CONCRETE SLAB WHERE OCCURS.
6. CONTINUOUS KEY – SEE TYPICAL KEY IN CONCRETE DETAIL.
7. #5 AT 8" O.C.
8. CONCRETE FOOTING.
9. HANDRAIL ATTACHMENT BY OTHERS.
10. 1 1/2" DIA. ROCK IN 12" X 12" X CONTINUOUS ROCK POCKET.

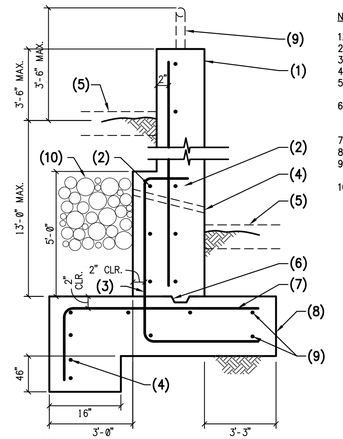

20 *12'-0" TALL RETAINING WALL*
NO SCALE

NO	BY	DATE	REVISIONS	DATE	APP.

Registered Professional Engineer (Civil) CERTIFICATE NO. 70374 JAMES APPLEYARD Date Signed 10/31/25 ARIZONA, U.S.A.

PREPARED BY: PKA
DESIGNED BY: JA
DRAWN BY: NS
CHECKED BY: JA
SCALE: AS NOTED
DATE: SEP 2025
JOB NO.: 23364

TITLE: **TYPICAL DETAILS**

JOB: TOWN OF JEROME
WASTEWATER
TREATMENT PLANT
YAVAPAI AZ

ISSUED FOR BID

PREPARED BY:
PACE
Advanced Water Engineering
8723 E. VIA DE COMMERCIO, 3RD FLOOR, SCOTTSDALE, CA 85258
P: (480) 991-3595 | W: www.pacewater.com
TAYLOR B. PIERCE R.C.E. 70097 DATE

SHEET
S1.5
56 OF 99 SHEETS

JOB NO. 23364

THESE DRAWINGS ARE THE PROPERTY OF P.A.C.E. AND SHALL NOT BE REPRODUCED IN ANY MANNER NOR BE USED FOR CONSTRUCTION UNLESS STAMPED 'ISSUED FOR CONSTRUCTION'.

FOR GENERAL PRICING INFORMATION ONLY, COMPLETE DESIGN AND SHOP DRAWINGS TO BE SUPPLIED AND SUBMITTED BY STUD SUPPLIER

PK ASSOCIATES, LLC
6900 E. Belleview Ave. #200
Greenwood Village, Colorado 80111
Phone: (720) 799-1058
Email: cadd@pkastructural.com
Website: www.pkastructural.com

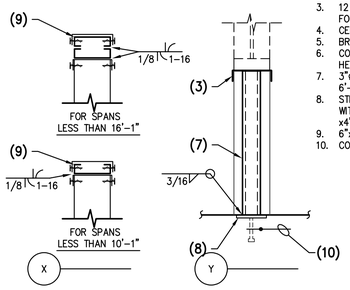

NOTES:
1. STEEL STUD.
2. STEEL HEADER PER SCHEDULE.
3. 12 GAGE STEEL STUD TRACK FOR SPANS LESS THAN 16'-1".
4. CEILING LINE.
5. BRACES PER DETAIL.
6. CONT. SPANDREL OPENING HEADER.
7. 3"ø. STEEL PIPE AT 6'-0" O.C.
8. STEEL PLATE 1/2"x5"x10" WITH 2- 1/2"ø HEADED STUDS x4" LONG AT 8" O.C.
9. 6"x16 GAGE (600 S200).
10. CONT. 1 #5 AT H.S.

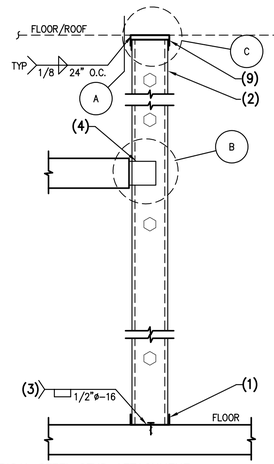

CF3 TYPICAL STEEL STUD ATTACHMENT

NO SCALE

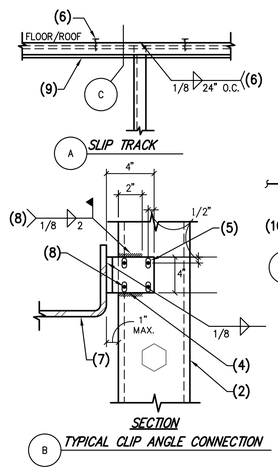

NOTES:
1. CONT. 16 GAGE "UNPUNCHED" STEEL TRACK. FOR ATTACHMENT SEE DETAIL 40.
2. STEEL STUD WALL.
3. USE 1/2"ø PUDDLE WELD AT 16" O.C. WHERE TRACK IS INSTALLED ON STEEL DECK (ROOF CONDITIONS).
4. STEEL CLIP ANGLE 4"x4"x12 GA. x 4" LONG AT EACH STUD.
5. PROVIDE 1" VERT. SLOTTED HOLE WHERE STUDS ARE FULL FLOOR HEIGHT.
6. HILTI SHOT PIN TO BOTTOM OF CONCRETE SLAB.
7. STEEL MEMBER (BENT PLATE AND BEAM FLANGE SHOWN OR CONTINUOUS EDGE ANGLE AT CONCRETE SLAB).
8. ALTERNATE TO WELD AT STUD TO CLIP ANGLE CONNECTION – 4 – #10 x 3/4" LONG SELF– TAPPING TEK SCREWS.
9. DEFLECTION TRACK TO ALLOW VERTICAL MOVEMENT – USE (2)– 16 GA. TRACKS BOTTOM TRACKS TO HAVE 2" LEGS. (ALLOW 3/4" DEFLECTION).
10. #10 x 3/4" LONG SELF–TAPPING SCREW EACH SIDE.

COLD FORMED STRUCTURAL STEEL FRAMING:

ALL COLD–FORMED STEEL FRAMING SHALL BE DESIGNED, FABRICATED AND ERECTED IN ACCORDANCE WITH MANUFACTURER'S RECOMMENDATIONS AND IN ACCORDANCE WITH THE LATEST EDITION OF "SPECIFICATIONS FOR THE DESIGN OF COLD–FORMED STEEL STRUCTURAL MEMBERS" BY THE AMERICAN IRON AND STEEL INSTITUTE.

STEEL FOR 14 AND 16 GAGE STUDS AND JOISTS, AND FOR ALL DIAGONAL TENSION STRAPS SHALL HAVE A MINIMUM YIELD STRENGTH OF 50 KSI. STEEL FOR ALL 18 AND 20 GAGE STUDS AND JOISTS, AND FOR ALL GAGES OF TRACK, ACCESSORIES AND BRIDGING SHALL HAVE A MINIMUM YIELD STRENGTH OF 33 KSI. STEEL SHALL BE GALVANIZED AT LOCATIONS EXPOSED TO WEATHER AND WHEREVER NOTED.

ALL STUD FRAMING (BOTH INTERIOR AND EXTERIOR) SHALL BE DESIGNED AND CONSTRUCTED TO ACCOMMODATE VERTICAL DEFLECTION OF THE STRUCTURE OF UP TO 1/2" LIVE LOAD DEFLECTION, UNLESS GREATER VALUE IS NOTED ON PLANS OR DETAILS. UTILIZE SLIP TRACK OR OTHER SIMILAR MEANS.

ALL STUDS SHALL BE SECURELY SEATED FOR FULL END BEARING ON TOP AND BOTTOM TRACK. UNLESS NOTED OTHERWISE, PROVIDE DOUBLE STUDS AT ALL JAMBS, CORNERS, INTERSECTIONS, BEAM BEARINGS AND JOIST BEARINGS. BRIDGING SHALL BE INSTALLED PER MANUFACTURER'S RECOMMENDATION WITH THE FOLLOWING MINIMUM REQUIREMENTS.

FOR WALLS WITH NO AXIAL LOAD, PROVIDE BRIDGING AT MID–HEIGHT FOR WALLS LESS THAN OR EQUAL TO 10'–0" HIGH, AND 5'–0" O.C. MAXIMUM FOR WALLS GREATER THAN 10'–0" HIGH. FOR AXIAL LOAD BEARING WALLS, PROVIDE BRIDGING EQUALLY SPACED AT 4'–0" MAXIMUM. IN ADDITION, BRIDGING SHALL BE PROVIDED AT ROOF LINES AND ELSEWHERE AS NOTED ON THE DRAWINGS. SOLID BLOCKING SHALL BE INSTALLED IN LIEU OF BRIDGING WHERE NOTED ON THE DRAWINGS.

STEEL STUD DETAILS AND GAGES DEPICATED ON STRUCTURAL DRAWINGS SHOW GENERAL STRUCTURAL REQUIREMENTS AND ARE FOR SCHEMATICS PURPOSE ONLY. THE CONTRACTOR SHALL BE REQUIRED TO SUBMIT SHOP DRAWINGS WITH DESIGN CALCULATIONS SEALED BY A REGISTERED ENGINEER FOR ALL STEEL STUD FRAMING AND ANY ADDITIONAL FRAMING MATERIALS REQUIRED FOR COMPLETE DESIGN SHALL BE INCORPORATED. CALCULATIONS SHALL INCLUDE DERIVATION OF WND LOADS PER SPECIFIED BUILDING CODE.

ALL WELDING SHALL BE PERFORMED BY WELDERS EXPERIENCED IN LIGHT GAGE STRUCTURAL STEEL FRAMING WORK. DO NOT NOTCH FLANGES OF JOISTS OR STUDS. DOUBLE UP FLOOR JOISTS AND BLOCKING UNDER PARTITIONS. PROVIDE BLOCKING AT SUPPORTS OF ALL JOISTS. DOUBLE UP STUDS AT JAMBS AND AS REQUIRED UNDER BEAMS IN BEARING WALLS.

TYPICAL STUDS SHALL BE DESIGNED FOR L/360 EXCEPT STUDS SUPPORTING VENEER SHALL BE DESIGN FOR MAXIMUM DEFLECTION OF L/600.

STEEL STUD SUPPLIER SHALL DESIGN AND SUPPLY STRUCTURAL STEEL AS REQUIRED FOR COMPLETE CONSTRUCTION OF VERTICAL WALL AWNINGS, SOFFITS, WING PLATES, FASCIA EXTENSIONS, ETC. ANY "RED METAL" OF FABRICATED STRUCTURAL STEEL REQUIRED TO COMPLETE WALL SYSTEMS SHALL BE DESIGNED AND INSTALLED BY STEEL STUD SUPPLIER.

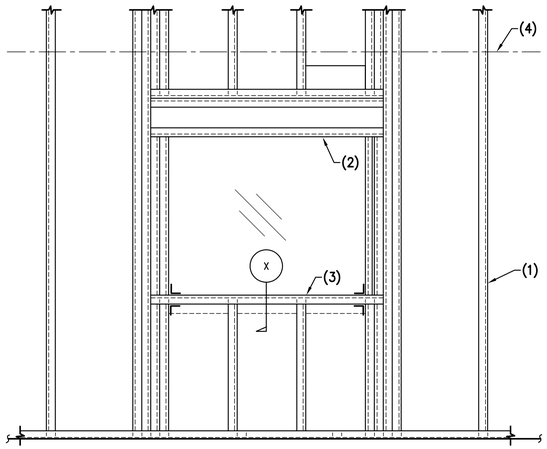

TYPICAL PUNCHED OPENING IN STUD WALL

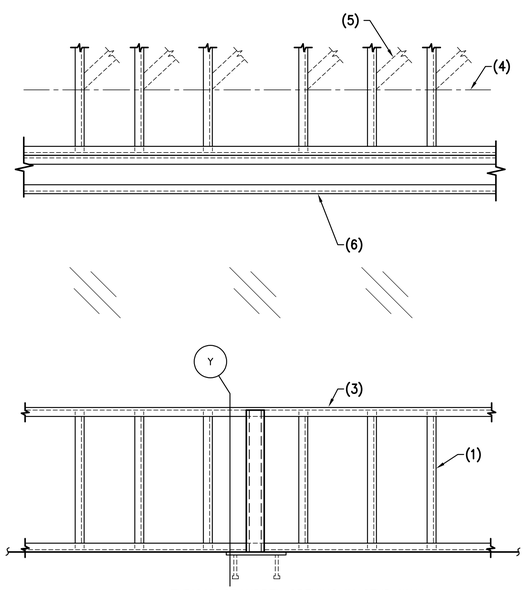

TYPICAL SPANDREL OPENING IN STUD WALL

CF7 TYPICAL OPENINGS IN STEEL STUD WALL

NO SCALE

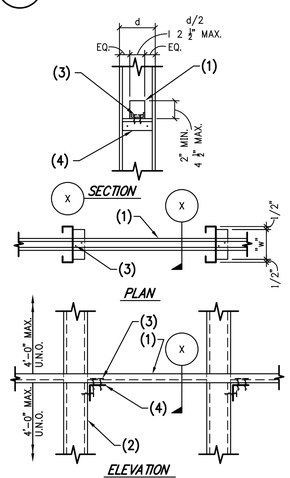

NOTES:
1. 1 1/2"x16GA.x 1/2" FLANGE CRC CONTINUOUS.
2. STUDS PER PLAN.
3. 2– #10 TEK SCREWS AT EACH STUD.
4. SIMPSON 'MSUBH3.25' CLIP WITH 2– #10 TEK SCREWS TO STUDS. ALT: L2x2x16GA.x 0'–5" LONG CLIP.

NOTE:
– 3– CRC BRIDGING PER FLOOR SEE TYPICAL DETAIL 56.
– AT LOCATIONS WHERE CRC IS INTERRUPTED SEE TYPICAL DETAIL 57.
– FOR TYPICAL NON–STRUCTURAL WALL BRIDGING SEE TYPICAL DETAIL 64.

CF6 TYPICAL BRIDGING DETAIL

NO SCALE

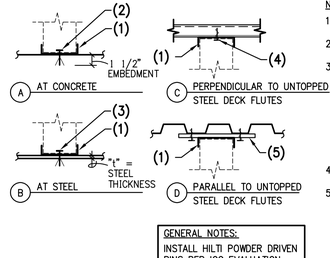

GENERAL NOTES:
INSTALL HILTI POWDER DRIVEN PINS PER ICC EVALUATION REPORT #ESR–1663.

NOTES:
1. STEEL TRACK. DEFLECTION TRACK AS OCCURS.
2. 3/8"ø SIMPSON DROP IN ANCHOR PER SCHEDULE.
3. 0.145ø HILTI X–EDNI POWDER DRIVEN PINS PER SCHEDULE. FOR "t"<1/2", FASTENERS MUST PENETRATE THRU STEEL BASE MATERIAL. FOR "t"=1/2", FASTENERS MUST PENETRATE 9/16" MIN. FOR "t">3/4", FASTENERS MUST PENETRATE 7/16" MIN.
4. #10x3/4" LONG TEKS SCREW PER SCHEDULE.
5. 12"x12x20 GAGE STEEL PLATE WITH 4 #10x 3/4" LONG TEKS SCREWS (ONE EACH CORNER). PLATE SPACING PER SCHEDULE.

TYPICAL TRACK ATTACHMENT

KEY	TYPE A	TYPE B	TYPE C	TYPE D
	ANCHOR SPACING	PIN SPACING	SCREW SPACING	PLATE SPACING
EXTERIOR	12" O.C.	12" O.C.	2 ROWS AT 6" O.C. (4" O.C. ROW SPACING)	12" O.C. (CONT. 12" WIDE PLATE)
INTERIOR	24" O.C.	16" O.C.	12" O.C.	48" O.C.

CF4 TYPICAL STEEL TRACK AT STRUCTURE

NO SCALE

MIN. STEEL STUD PROPERTIES GROSS

SIZE	GAGE	DESIGNATION	Sx(IN^3)	Ix(IN^4)	Fy (KSI)	SPACING	REMARKS L/360	REMARKS L/600
EXTERIOR								
8"	12	800S200–97	2.801	11.203	50	16" O.C.	27'–7"	23'–3"
8"	16	800S200–68	2.035	8.140	50	16" O.C.	24'–10"	20'–11"
6"	12	600S200–97	1.871	5.612	50	16" O.C.	21'–11"	18'–6"
6"	16	600S200–54	1.106	3.319	50	16" O.C.	18'–5"	15'–6"
6"	18	600S162–43	0.767	2.316	33	16" O.C.	16'–4"	13'–9"
6"	20	600S162–33	0.577	1.793	33	16" O.C.	13'–9"	12'–8"
INTERIOR								
6"	20–STRUCTURAL	600S162–33	0.598	1.793	33	16" O.C.	24'–0"	22'–0"
6"	20–STRUCTURAL	600S125–33	0.470	1.479	33	16" O.C.	22'–0"	20'–0"
ALL TRACKS SHALL BE SAME GAGE AS STUDS (18 GAGE MIN) W/ 2" FLANGE								

CF1 MINIMUM STEEL STUD PROPERTIES

NO SCALE

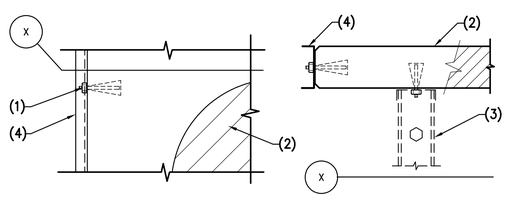

NOTES:
1. 1/2"ø EXP. BOLTS AT 24" O.C. DO NOT CUT VERTICAL REINFORCING.
2. CONCRETE OR MASONRY WALL.
3. LINE OF STEEL STUD WALL AS OCCURS.
4. STEEL STUDS.

CF5 TYPICAL STEEL STUD AT CONCRETE OR MASONRY WALL

NO SCALE

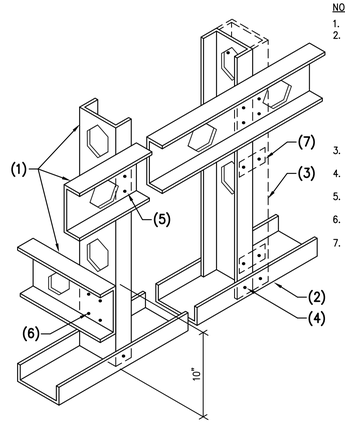

NOTES:
1. STEEL STUD.
2. UNPUNCHED STEEL STUD TRACK – ATTACHMENT REQUIRED 1 HILTI 3/4" LONG X–U TYPE POWDER DRIVEN PINS @ 8" O.C. (I.C.C. #ERS–1663) OR APPROVED EQUAL FOR ALL STUDS 6" OR SMALLER. FOR 8" STUDS USE 2 PINS AT 8: O.C. – TYP. U.N.O.
3. MULTIPLE STUDS WHERE SHOWN ON PLAN OR DETAILS.
4. #10x3/4" LONG TEKS SCREWS EACH SIDE.
5. 2 #10x3/4" LONG TEKS SCREWS.
6. 4 #10x3/4" LONG TEKS SCREWS.
7. 2"x20 GAGE FLAT STRAP BOTH SIDES AT 24" O.C. WITH 1 #10 SCREW AT EACH VERTICAL STUD.

CF2 TYPICAL STEEL STUD WALL – SCREW CONNECTION

NO SCALE

NO	BY	DATE	REVISIONS				DATE	APP.

THESE DRAWINGS ARE THE PROPERTY OF P.A.C.E. AND SHALL NOT BE REPRODUCED IN ANY MANNER NOR BE USED FOR CONSTRUCTION UNLESS STAMPED "ISSUED FOR CONSTRUCTION".

Registered Professional Engineer (Civil)
CERTIFICATE NO.
70374
JAMES APPLEYARD
10/31/25
Date Signed
ARIZONA, U.S.A.

PREPARED BY:	PKA
DESIGNED BY:	JA
DRAWN BY:	NS
CHECKED BY:	JA
SCALE:	AS NOTED
DATE	SEP 2025
JOB NO.	23364

TITLE: TYPICAL DETAILS

JOB: TOWN OF JEROME WASTEWATER TREATMENT PLANT YAVAPAI AZ

ISSUED FOR BID

PREPARED BY:
PACE
Advanced Water Engineering
8723 E. VIA de COMMERCIO #A, SCOTTSDALE, CA 85258
P: (480) 991-3595 | www.pacewater.com
TAYLOR B. PIERCE R.C.E 70097 DATE

SHEET
S1.6
57 OF 99 SHEETS

JOB NO. 23364

FOR GENERAL PRICING INFORMATION ONLY, COMPLETE DESIGN AND SHOP DRAWINGS TO BE SUPPLIED AND SUBMITTED BY STUD SUPPLIER

PK ASSOCIATES, LLC
6900 E. Belleview Ave. #200
Greenwood Village, Colorado 80111
Phone: (720) 799-1058
Email: cadd@pkastructural.com
Website: www.pkastructural.com

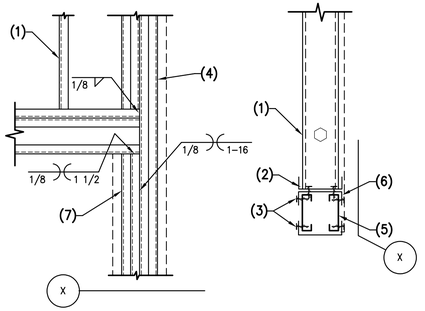

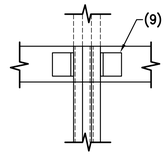

AT TOP OF STUD

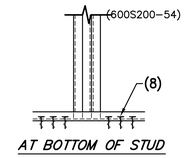

AT BOTTOM OF STUD

NOTES:

1. STEEL STUD WALL.
2. CONT. 16 GAGE TRACK W/ 2 – #12 TEK SCREWS AT 12" O.C. STAGGERED THROUGH TRACKS TO STUDS BELOW.
3. #12 TEK SCREWS AT 12" O.C., EACH LEG OF TRACK.
4. 2 (FULL HEIGHT) JAMB STUDS MIN. REFER TO SCHEDULE BELOW FOR ADDITIONAL STUDS WHERE REQUIRED.
5. STEEL HEADER PER SCHEDULE.
6. CONT. STEEL TRACK – TOP AND BOTTOM. REFER TO SCHEDULE FOR HEAVIER GAGE WHERE REQUIRED.
7. DOUBLE TRIMMER STUD, 16 GA. MIN. (ADD ONE ADDITIONAL STUDS AT EVERY 4'–0" OPENING. INCREASE AFTER 6'–0" WIDE).
8. TYPICAL PINS OR SCREWS AT 2" O.C. EACH SIDE FOR EVERY STUD IN THE GROUP.
9. TYPICAL CLIP ANGLE, ONE FOR EVERY TWO STUDS.

NOTE:

– FOR OPENING LARGER THAN SHOWN – SEE FRAMING PLAN
– ALL HEADER'S STUDS AND TRACKS SHALL BE UNPUNCHED MEMBERS.

OPENING	EXTERIOR WALLS		INTERIOR WALLS			
	HEADER SIZE (6" WALL)	JAMB STUDS (6" WALL)	HEADER SIZE		JAMB STUDS	
			4" WALL	6" WALL	4" WALL	6" WALL
0" – 4'–0"	2– 6"x20 GA (600S137–33) STUDS AND 2– 6"x18 GA (600T125–43) TRACKS	2– 6"x16 GA (600S200–54)	2– 6"x20 GA (600S137–33) STUDS AND 2– 4"x18 GA (400T125–43) TRACKS	2– 6"x20 GA (600S137–33) STUDS AND 2– 6"x18 GA (600T125–43) TRACKS	2– 4"x20 GA (400S137–33)	2– 6"x20 GA (600S137–33)
4'–1" – 6'–0"	2– 6"x20 GA (600S137–33) STUDS AND 2– 6"x18 GA (600T125–43) TRACKS	2– 6"x16 GA (600S200–54)	2– 6"x20 GA (600S137–33) STUDS AND 2– 4"x18 GA (400T125–43) TRACKS	2– 6"x20 GA (600S137–33) STUDS AND 2– 6"x18 GA (600T125–43) TRACKS	2– 4"x20 GA (400S137–33)	2– 6"x20 GA (600S137–33)
6'–1" – 8'–0"	2– 6"x18 GA (600S162–43) STUDS AND 2– 6"x18 GA (600T125–43) TRACKS	2– 6"x16 GA (600S200–54)	2– 6"x20 GA (600S137–33) STUDS AND 2– 4"x18 GA (400T125–43) TRACKS	2– 6"x20 GA (600S137–33) STUDS AND 2– 6"x18 GA (600T125–43) TRACKS	2– 4"x20 GA (400S137–33)	2– 6"x20 GA (600S137–33)
8'–1" – 10'–0"	2– 6"x16 GA (600S200–54) STUDS AND 2– 6"x18 GA (600T125–43) TRACKS	3– 6"x16 GA (600S200–54)	2– 6"x20 GA (600S137–33) STUDS AND 2– 4"x18 GA (400T125–43) TRACKS	2– 6"x20 GA (600S137–33) STUDS AND 2– 6"x18 GA (600T125–43) TRACKS	2– 4"x20 GA (400S137–33)	2– 6"x20 GA (600S137–33)
10'–1" – 12'–0"	3– 6"x16 GA (600S250–54) STUDS AND 2– 6"x16 GA (600T200–54) TRACKS	3– 6"x16 GA (600S200–54)	3– 6"x20 GA (600S137–33) STUDS AND 2– 4"x16 GA (400T150–54) TRACKS	3– 6"x20 GA (600S137–33) STUDS AND 2– 6"x18 GA (600T125–43) TRACKS	2– 4"x20 GA (400S137–33)	2– 6"x20 GA (600S137–33)
12'–1" – 14'–0"	3– 8"x16 GA (800S250–54) STUDS AND 2– 6"x14 GA (600T200–68) TRACKS	4– 6"x16 GA (600S200–54)	3– 8"x20 GA (800S137–33) STUDS AND 2– 4"x16 GA (400T200–54) TRACKS	3– 8"x20 GA (800S137–33) STUDS AND 2– 6"x18 GA (600T125–43) TRACKS	2– 4"x20 GA (400S137–33)	2– 6"x20 GA (600S137–33)
14'–1" – 16'–0"	3– 8"x14 GA (800S200–68) STUDS AND 3– 6"x14 GA (600T200–68) TRACKS	5– 6"x16 GA (600S200–54)	3– 8"x18 GA (800S137–43) STUDS AND 3– 4"x16 GA (400T200–54) TRACKS	3– 8"x18 GA (800S137–43) STUDS AND 2– 6"x18 GA (600T125–43) TRACKS	2– 4"x20 GA (400S162–33)	2– 6"x20 GA (600S137–33)
CONTINUOUS SPANDREL OPENING	2– 6"x18 GA (600S162–43) STUDS AND 2– 6"x18 GA (600T125–43) TRACKS	N/A USE BRACE PER DETAIL	2– 6"x20 GA (600S137–33) STUDS AND 2– 4"x18 GA (400T125–43) TRACKS	2– 6"x20 GA (600S137–33) STUDS AND 2– 6"x18 GA (600T125–43) TRACKS	N/A USE BRACE PER DETAIL	N/A USE BRACE PER DETAIL
DESIGN HEIGHT IS 16'–0" OR LESS, IF GREATER HEIGHT REQUIRED USE BRACES ACROSS OPENING. VERIFY BRACES ARE ABOVE CEILING LINE.						

CF6 HEADER IN NON–BEARING STEEL STUD WALL

NO SCALE

NO	BY	DATE	REVISIONS	DATE	APP.

THESE DRAWINGS ARE THE PROPERTY OF P.A.C.E. AND SHALL NOT BE REPRODUCED IN ANY MANNER NOR BE USED FOR CONSTRUCTION UNLESS STAMPED "ISSUED FOR CONSTRUCTION".

Registered Professional Engineer (Civil) CERTIFICATE NO. 70374 JAMES APPLEYARD 10/31/25 Date Signed ARIZONA, U.S.A.

PREPARED BY:	PKA
DESIGNED BY:	JA
DRAWN BY:	NS
CHECKED BY:	JA
SCALE:	AS NOTED
DATE	SEP 2025
JOB NO.	23364

TITLE: TYPICAL DETAILS

JOB: TOWN OF JEROME WASTEWATER TREATMENT PLANT — YAVAPAI AZ

ISSUED FOR BID

PREPARED BY:

PACE
Advanced Water Engineering
8723 E. Via de Ventura Suite 260 | SCOTTSDALE, CA 85258
P: (480) 991-3995 | www.pacewater.com

TAYLOR B. PIERCE R.C.E 70097 DATE

SHEET S1.7
58 OF 99 SHEETS

JOB NO. 23364

PK ASSOCIATES, LLC
6900 E. Belleview Ave. #200
Greenwood Village, Colorado 80111
Phone: (720) 799-1058
Email: cadd@pkastructural.com
Website: www.pkastructural.com

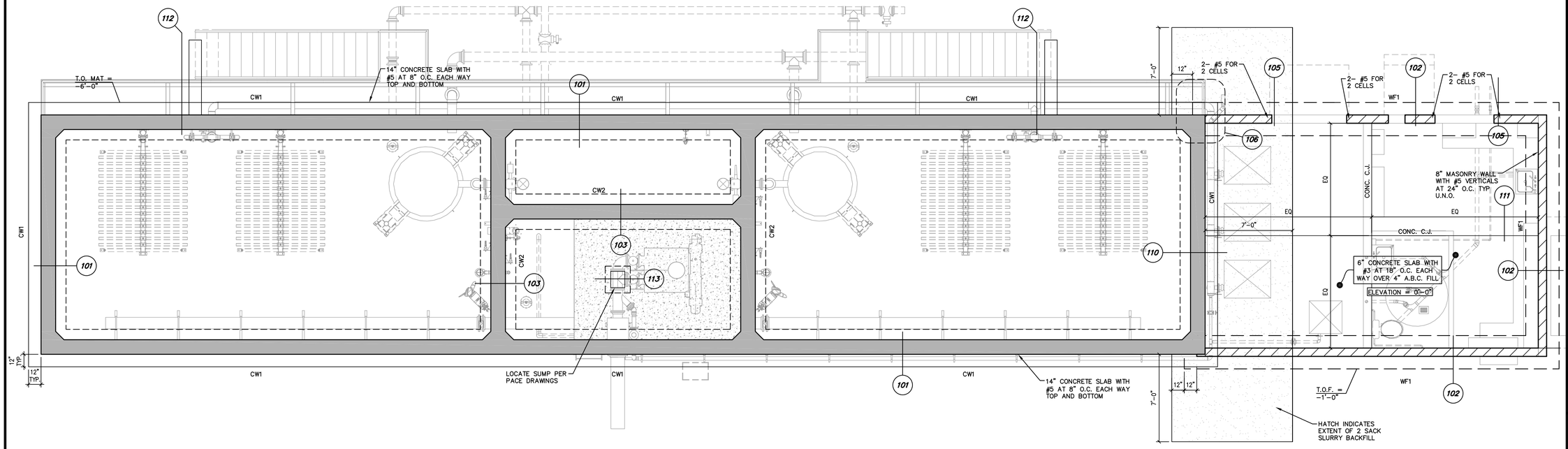

1 FOUNDATION PLAN

SCALE: 1/4"=1'-0"

CONCRETE WALL (CW) SCHEDULE

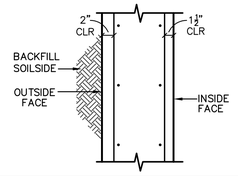

MARK	t	VERTICAL REINF.		HORIZONTAL REINF.		REMARKS
		INSIDE FACE	OUTSIDE FACE	INSIDE FACE	OUTSIDE FACE	
CW1	14"	#9 AT 6" O.C.	#5 AT 8" O.C.	#5 AT 8" O.C.	#5 AT 8" O.C.	TYP. U.N.O.
CW2	14"	#9 AT 6" O.C.	#9 AT 6" O.C.	#5 AT 8" O.C.	#5 AT 8" O.C.	TYP. U.N.O.

*NOTE: AT BOTTOM OF ALL WALLS PROVIDE SPECIAL HORIZONTAL REINFORCING AND U-BARS AT SHOWN IN DETAILS 119 AND 120 -TYPICAL

CONTINUOUS FOOTING (WF) SCHEDULE

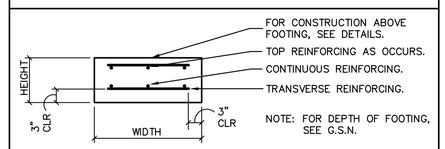

MARK	DIMENSIONS		FOOTING REINFORCING	REMARKS
	HEIGHT	WIDTH		
WF1	12"	2'-6"	3- #5 CONTINUOUS	---

ISSUED FOR BID

PREPARED BY: PACE
Advanced Water Engineering
8723 E. Via de Commercio Suite 1 SCOTTSDALE, CA 85258
P: (480) 991-3595 | www.pacewater.com
TAYLOR B. PIERCE R.C.E 70097 DATE

NO	BY	DATE	REVISIONS	DATE	APP.

Registered Professional Engineer CERTIFICATE NO. 70374 JAMES APPLEYARD 10/31/25 Date Signed ARIZONA, U.S.A.

PREPARED BY:	PKA
DESIGNED BY:	JA
DRAWN BY:	NS
CHECKED BY:	JA
SCALE:	AS NOTED
DATE	SEP 2025
JOB NO.	23364

THESE DRAWINGS ARE THE PROPERTY OF P.A.C.E. AND SHALL NOT BE REPRODUCED IN ANY MANNER NOR BE USED FOR CONSTRUCTION UNLESS STAMPED "ISSUED FOR CONSTRUCTION".

TITLE: FOUNDATION PLAN

JOB: TOWN OF JEROME WASTEWATER TREATMENT PLANT YAVAPAI AZ

SHEET S2.00
59 OF 99 SHEETS

JOB NO. 23364

PK ASSOCIATES, LLC
6900 E. Belleview Ave. #200
Greenwood Village, Colorado 80111
Phone: (720) 799-1058
Email: cadd@pkastructural.com
Website: www.pkastructural.com

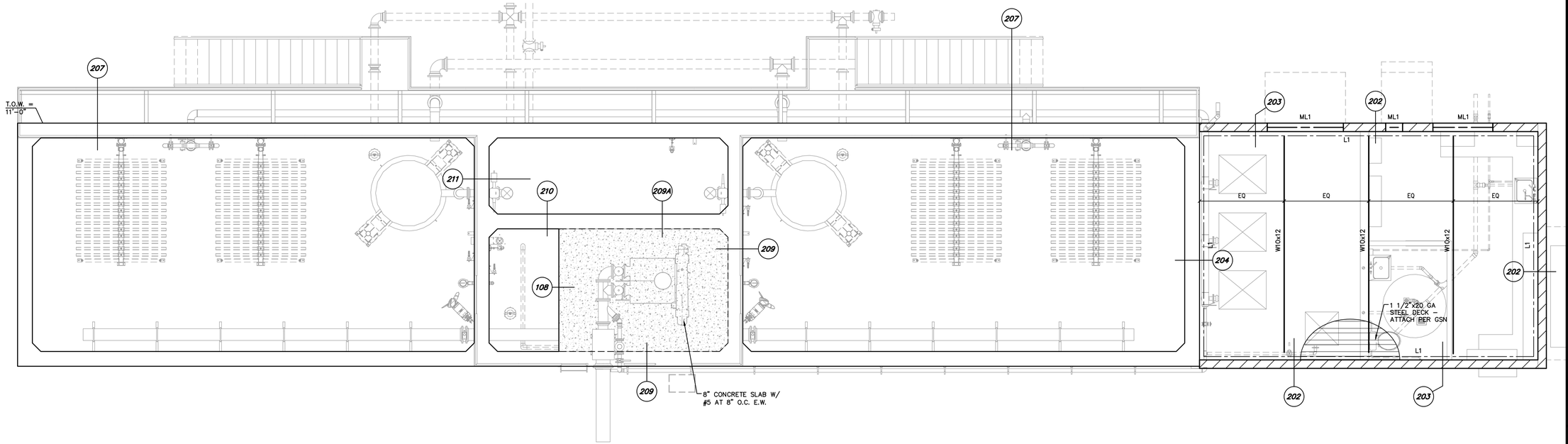

1 FRAMING PLAN

SCALE: 1/4"=1'-0"

LEDGER (L) SCHEDULE

STEEL: 1. ALL LEDGERS SHALL HAVE MINIMUM OF 2 WELD PLATES OR ANCHOR BOLTS AS NOTED BELOW.
2. WELD PLATES OR ANCHOR BOLTS SHALL BE LOCATED NOT LESS THAN 6" NOR MORE THAN 1'-4" FROM END OF LEDGER OR LEDGER SPLICE.

MARK	SIZE / TYPE	CONNECTION
L1	L4x4x1/4"	EMBED PER DETAIL 202 AND 204 AT 48" O.C.

MASONRY LINTEL (ML) SCHEDULE

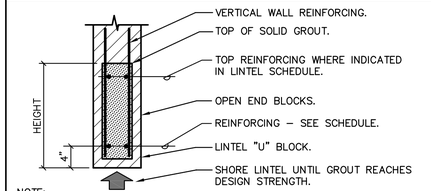

NOTE:
1. VERTICAL REINFORCING TO MATCH AND LAP WALL REINFORCING PER G.S.N.
2. EXTEND GROUT, OPEN END MASONRY UNITS AND REINFORCING 2'-0" PAST EACH JAMB. USE CORNER BARS WHERE 2'-0" CANNOT BE ACHIEVED.

MARK	HEIGHT	REINFORCING	REMARKS
ML1	16"	2- #5 BOTTOM	---

NO	BY	DATE	REVISIONS	DATE	APP.

Registered Professional Engineer (Civil) CERTIFICATE NO. 70374 JAMES APPLEYARD Date Signed 10/31/25 ARIZONA, U.S.A.

PREPARED BY: PKA
DESIGNED BY: JA
DRAWN BY: NS
CHECKED BY: JA
SCALE: AS NOTED
DATE: SEP 2025
JOB NO.: 23364

THESE DRAWINGS ARE THE PROPERTY OF P.A.C.E. AND SHALL NOT BE REPRODUCED IN ANY MANNER NOR BE USED FOR CONSTRUCTION UNLESS STAMPED 'ISSUED FOR CONSTRUCTION'.

TITLE: FRAMING PLAN

JOB: TOWN OF JEROME WASTEWATER TREATMENT PLANT — YAVAPAI AZ

ISSUED FOR BID

PREPARED BY:
PACE
Advanced Water Engineering
8723 E. VIA de VENTURA, SUITE 290 | SCOTTSDALE, CA 85258
P: (480) 991-3995 | www.paceadvisor.com
TAYLOR B. PIERCE — R.C.E 70097 — DATE

SHEET
S2.01
60 OF 99 SHEETS

JOB NO. 23364

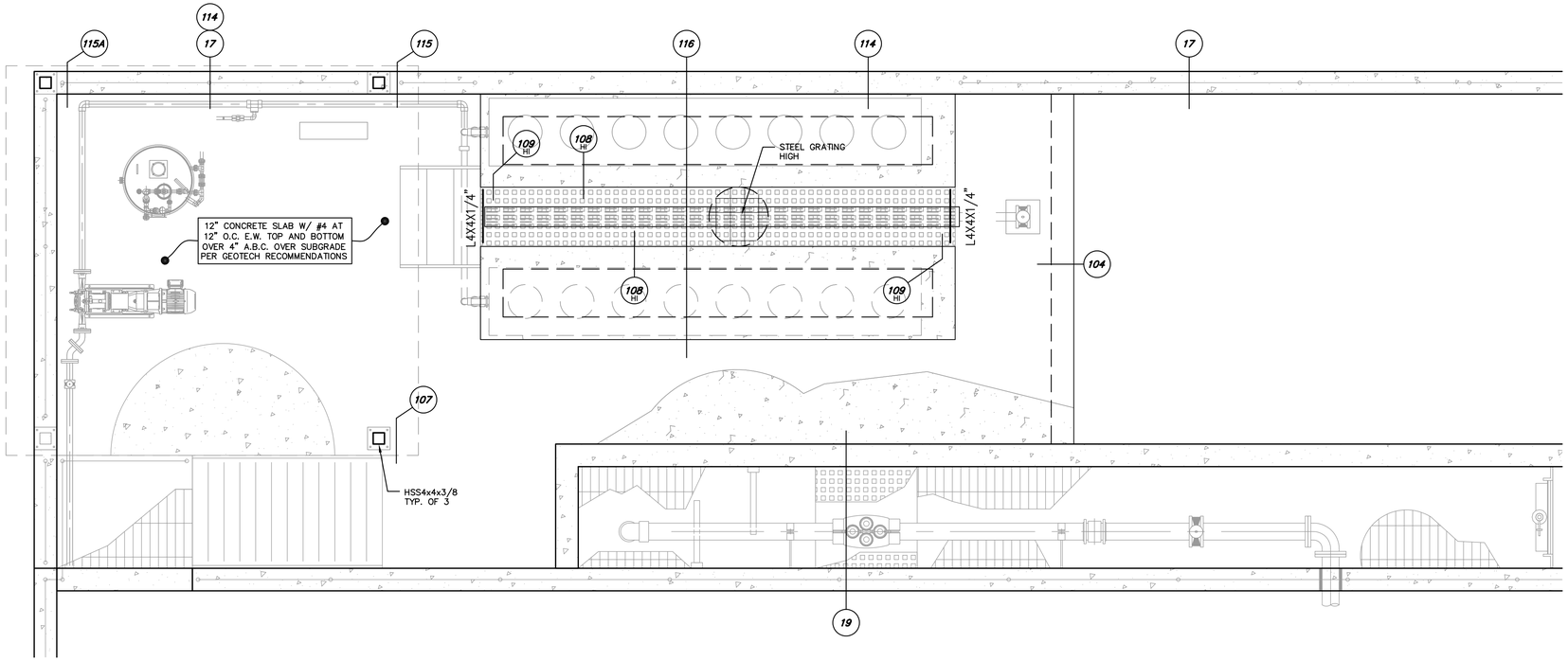

1 PLAN - DEWATERING PAD

SCALE: 1/2"=1'-0"

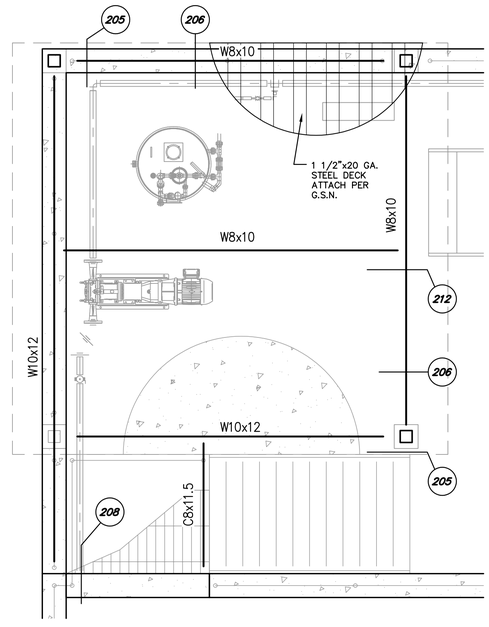

2 SHADE STRUCTURE - FRAMING PLAN

SCALE: 1/2"=1'-0"

PK ASSOCIATES, LLC
6900 E. Belleview Ave. #200
Greenwood Village, Colorado 80111
Phone: (720) 799-1058
Email: cadd@pkastructural.com
Website: www.pkastructural.com

NO	BY	DATE	REVISIONS	DATE	APP.

THESE DRAWINGS ARE THE PROPERTY OF P.A.C.E. AND SHALL NOT BE REPRODUCED IN ANY MANNER NOR BE USED FOR CONSTRUCTION UNLESS STAMPED 'ISSUED FOR CONSTRUCTION'.

Registered Professional Engineer (Civil)
CERTIFICATE NO.
70374
JAMES APPLEYARD
10/31/25
Date Signed
ARIZONA, U.S.A.

PREPARED BY: PKA
DESIGNED BY: JA
DRAWN BY: NS
CHECKED BY: JA
SCALE: AS NOTED
DATE: SEP 2025
JOB NO.: 23364

TITLE: FRAMING PLAN

JOB: TOWN OF JEROME
WASTEWATER
TREATMENT PLANT
YAVAPAI AZ

ISSUED FOR BID

PREPARED BY:
PACE
Advanced Water Engineering
8723 E. VIA DE COMERCIO, STE A, SCOTTSDALE, CA 85258
P: (480) 991-3595 | W: www.pacewater.com
TAYLOR B. PIERCE R.C.E 70097 DATE

SHEET
S2.10
61 OF 99 SHEETS

JOB NO. 23364

NOTES:
1. CONCRETE SLAB/WALL.
2. CONT. L2x2x1/4" W/ 1/2"ø H.S. AT AT 18" O.C.
3. GRATING AND ATTACHMENT BY OTHERS.

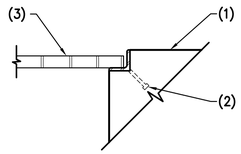

108 GRATING AT CONCRETE SLAB/WALL
NO SCALE

NOTES:
1. MASONRY WALL BEYOND.
2. CONCRETE SLAB WHERE OCCURS.
3. FINISHED GRADE.
4. SOLID GROUTED MASONRY STEM WALL AND CONCRETE FOOTING WITH REINFORCING CONTINUOUS FROM BEYOND.
5. CONCRETE SLAB ON GRADE, TOOLED EDGE AT OPENING.
6. DEPRESS STEM WALL 8" MIN.
7. VARIES – SEE PLANS FOR SIZE AND REINF.

NOTE:
– AT CONTRACTOR'S OPTION, USE CONCRETE STEM WALL W/ SAME REINFORCING.

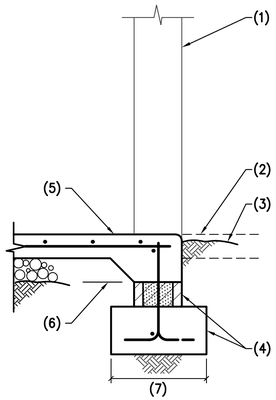

105 EXTERIOR MASONRY WALL FOOTING AT OPENING
NO SCALE

PK ASSOCIATES, LLC
6900 E. Belleview Ave. #200
Greenwood Village, Colorado 80111
Phone: (720) 799-1058
Email: cadd@pkastructural.com
Website: www.pkastructural.com

NOTES:
1. CONCRETE WALL.
2. CONCRETE FOOTING MAT SLAB
3. DOWELS TO MATCH AND LAP VERTICAL WALL REINFORCING.
4 CONCRETE SLAB OR FINISHED GRADE AS OCCURS.
5. CONTINUOUS KEYED JOINT.
6. 6" WATER STOP.
7. #5 BAR CONT. AT HOOK.
8. MIRA DRAIN BY CARLISE COATING AND WATERPROOFING, INC. OR APPROVED EQUAL.

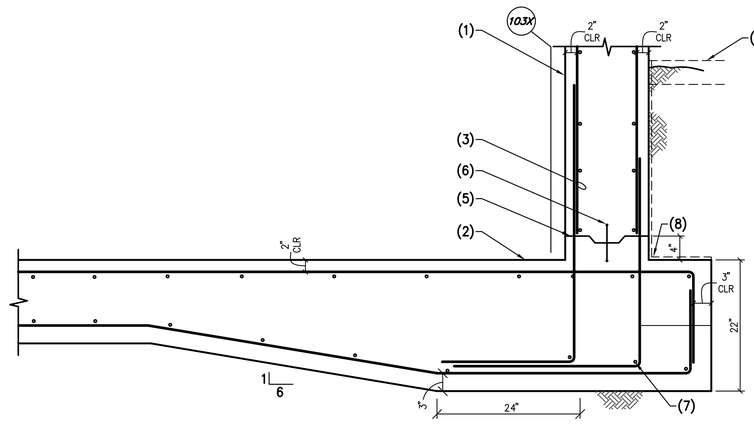

101 CONCRETE WALL AT EDGE OF MAT FOUNDATION
NO SCALE

NOTES:
1. CONCRETE WALL.
2. CONCRETE FOOTING.
3. FOOTING REINFORCING.
4. DOWELS TO MATCH AND LAP FOOTING REINFORCING.
5. 90° HOOK.

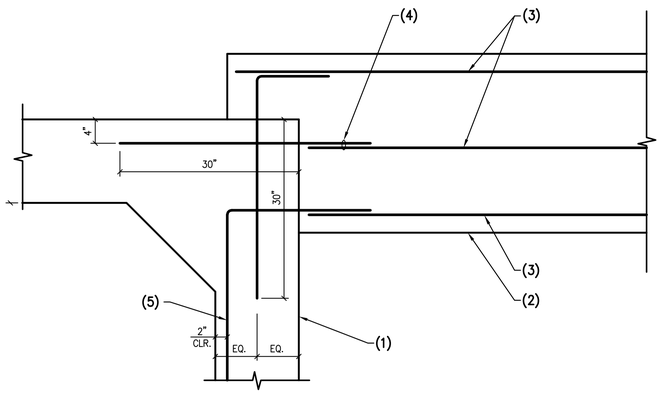

106 PLAN – CONCRETE FOOTING AT CONCRETE WALL
NO SCALE

NOTES:
1. STEEL ANGLE.
2. 1/4" STEEL PLATE.
3. GRATING AND ATTACHMENT BY OTHERS.

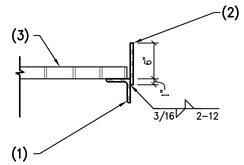

104 GRATING AT STEEL ANGLE
NO SCALE

NOTES:
1. 1 #4 CONTINUOUS.
2. FINISHED GRADE OR CONCRETE SLAB WHERE OCCURS.
3. CONCRETE FOOTING.
4. MASONRY WALL – GROUT SOLID BELOW GRADE.
5. DOWELS TO MATCH AND LAP VERTICAL WALL REINFORCING PER G.S.N. – ALTERNATE BENDS.
6. CONCRETE SLAB.
7. GRADE VARIES AS REQ'D. SOLID GROUT WALL BELOW GRADE.

NOTE:
AT CONTRACTOR'S OPTION, USE CONCRETE STEM WALL W/ SAME REINFORCING.

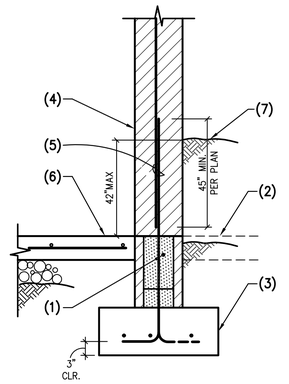

102 EXTERIOR MASONRY WALL FOOTING
NO SCALE

NOTES:
1. CONCRETE SLAB/WALL.
2. CONT. L2x2x1/4" STEEL ANGLE W/ 1/2"ø H.S. AT 4" O.C. AT STEEL ANGLE.
3. 1/2"x6"x6" STEEL PLATE W/ 2– 1/2"ø H.S. AT 4" O.C.
4. STEEL ANGLE.
5. GRATING AND ATTACHMENT BY OTHERS.

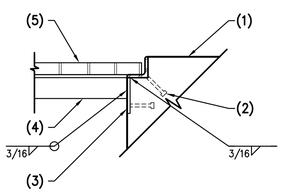

109 STEEL ANGLE AT CONCRETE WALL/SLAB
NO SCALE

NOTES:
1. STEEL COLUMN.
2. 1/2"x10"x10" STEEL PLATE W/ 4– 3/4"ø F1554 GR36 A.B. AT 7" O.C.
3. ±1 1/2" DRYPACK.
4. CONCRETE SLAB.

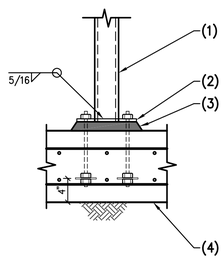

107 STEEL COLUMN AT CONCRETE SLAB
NO SCALE

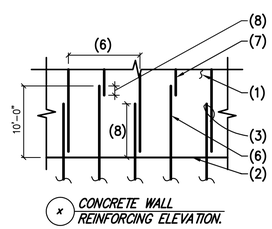

x CONCRETE WALL REINFORCING ELEVATION.

NOTES:
1. CONCRETE WALL.
2. CONCRETE FOOTING.
3. DOWELS TO MATCH AND LAP VERTICAL WALL REINFORCING.
4 #5 BAR CONTINUOUS AT HOOK.
5. CONTINUOUS KEYED JOINT.
6. DOWEL TO MATCH SCHEDULED WALL REINFORCING.
7. EVER OTHER VERTICAL BAR MAY LAP W/ A #5.
8. CLASS "B" TENSION LAP.

103 CONCRETE WALL AT MAT FOUNDATION
NO SCALE

ISSUED FOR BID

NO	BY	DATE	REVISIONS	DATE	APP.

Registered Professional Engineer (Civil) CERTIFICATE NO. 70374 JAMES APPLEYARD 10/31/25 Date Signed ARIZONA, U.S.A.

PREPARED BY: PKA
DESIGNED BY: JA
DRAWN BY: NS
CHECKED BY: JA
SCALE: AS NOTED
DATE: SEP 2025
JOB NO. 23364

THESE DRAWINGS ARE THE PROPERTY OF P.A.C.E. AND SHALL NOT BE REPRODUCED IN ANY MANNER NOR BE USED FOR CONSTRUCTION UNLESS STAMPED "ISSUED FOR CONSTRUCTION".

TITLE: FOUNDATION DETAILS

JOB: TOWN OF JEROME WASTEWATER TREATMENT PLANT AZ
YAVAPAI

PREPARED BY:
PACE
Advanced Water Engineering
8723 E. VIA de VENTURA, SUITE A-200 | SCOTTSDALE, CA 85258
P: (480) 991-3985 | www.paceadvisor.com
TAYLOR B. PIERCE R.C.E 70097 DATE

SHEET S3.1
62 OF 99 SHEETS

JOB NO. 23364

PK ASSOCIATES, LLC
6900 E. Belleview Ave. #200
Greenwood Village, Colorado 80111
Phone: (720) 799-1058
Email: cadd@pkastructural.com
Website: www.pkastructural.com

NOTES:
1. CONCRETE SLAB.
2. ALUMINUM GRATING.
3. 6" CONCRETE WALL/ SLAB W/ #4 AT 6"O.C. E.W.
4. WATERSTOP PER PACE DRAWINGS.
5. L3x3x1/4 W/ 1/2"ø HILTI SS KWIK BOLT T2 SCREW ANCHOR, OR APPROVED EQUAL. 2 ANCHORS EACH SIDE AT 9" O.C.

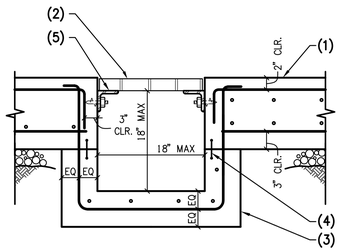

113 SUMP PIT AT CONCRETE SLAB
NO SCALE

NOTES:
1. CONCRETE WALL.
2. CONCRETE SLAB.
3. #5x30"x12" AT 12" O.C.
4. CONT. #5 AT BEND.

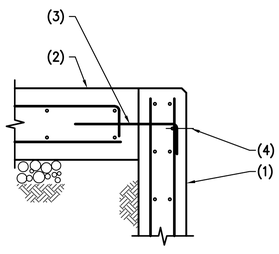

114 CONCRETE SLAB AT CONCRETE WALL
NO SCALE

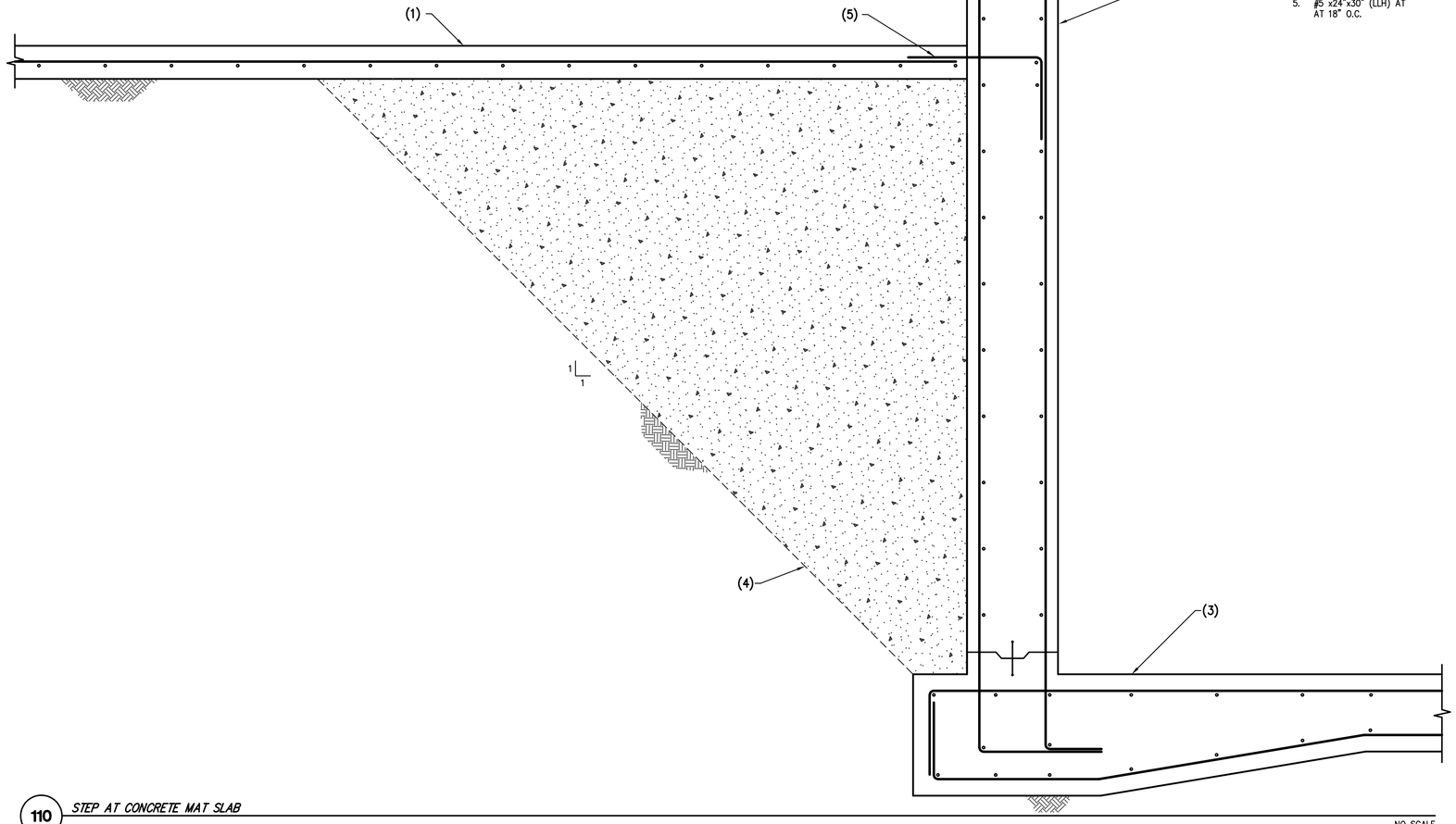

110 STEP AT CONCRETE MAT SLAB
NO SCALE

NOTES:
1. CONCRETE WALL.
2. CONCRETE SLAB.
3. #5x30"x12" AT 12" O.C.
4. CONT. #5 AT BEND.
5. STEEL POST.
6. 1/2"x12"x6" STEEL PLATE W/ 2– #5x30" A706 WELDABLE REBAR AT 9" O.C. AND 3/4"ø H.S. CENTERED.
7. 1/2" STEEL PLATE.
8. 2– #5x30" A706 WELDABLE REBAR.
9. 3/4"ø H.S.

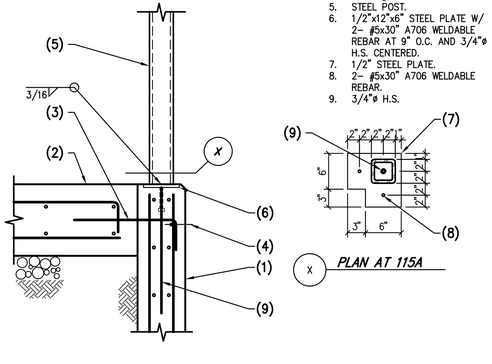

115 CONCRETE SLAB AT CONCRETE WALL
115A AS NOTED
NO SCALE

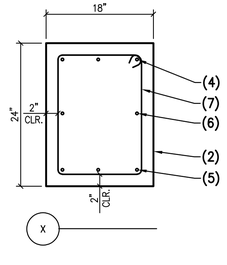

112 STAIR FOOTING AT CONCRETE WALL
NO SCALE

NOTES:
1. CONCRETE WALL.
2. STAIR CONCRETE FOOTING.
3. DOWELS TO MATCH AND LAP FOOTING REINFORCING.
4. 4– #6 TOP.
5. 3– #5 BOTTOM.
6. #5 EACH FACE.
7. #4 AT 12" O.C.

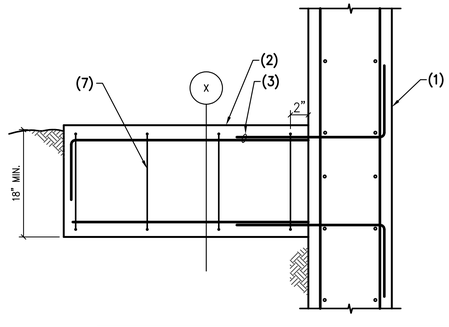

NOTES:
1. CONCRETE SLAB ON GRADE.
2. SAWCUT – 1/8" WIDE x 1/4 SLAB THICKNESS IN DEPTH – CUT SHALL BE MADE SOON ENOUGH TO PREVENT SHRINKAGE CRACKING, BUT NOT SO SOON AS TO CAUSE SPALLING OF THE CONCRETE WHILE SAWING. WORK MUST BE ACCOMPLISHED WITHIN 24 HOURS OF CONCRETE PLACEMENT.
3. CONTINUOUS KEY – SEE TYPICAL KEY IN CONCRETE DETAIL.
4. CUT 1/2" REINFORCEMENT ACROSS C.J. DO NOT CUT AT RAMP.

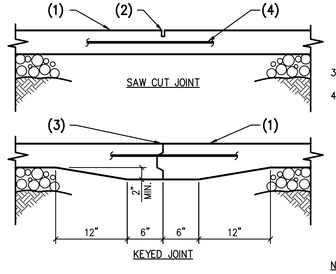

NOTE:
KEYED JOINTS NEED ONLY OCCUR AT EXPOSED EDGES DURING PLACEMENT UNLESS SPECIFICALLY NOTED ON THE PLANS. "TOOL WET JOINT", "ZIP STRIP", ETC. SHALL MATCH SAWCUT REQUIREMENTS.

111 CONTROL JOINTS IN CONCRETE SLAB ON GRADE
NO SCALE

NO	BY	DATE	REVISIONS	DATE	APP.

Registered Professional Engineer (Civil) CERTIFICATE NO. 70374 JAMES APPLEYARD Date Signed 10/31/25 ARIZONA, U.S.A.

PREPARED BY: PKA
DESIGNED BY: JA
DRAWN BY: NS
CHECKED BY: JA
SCALE: AS NOTED
DATE: SEP 2025
JOB NO.: 23364

THESE DRAWINGS ARE THE PROPERTY OF P.A.C.E. AND SHALL NOT BE REPRODUCED IN ANY MANNER NOR BE USED FOR CONSTRUCTION UNLESS STAMPED "ISSUED FOR CONSTRUCTION".

TITLE: FOUNDATION DETAILS

JOB: TOWN OF JEROME WASTEWATER TREATMENT PLANT — YAVAPAI AZ

ISSUED FOR BID

PREPARED BY: PACE Advanced Water Engineering
8723 E. VIA DE COMMERCIO, BLDG. 4, SCOTTSDALE, CA 85258
P: (480) 991-3595 | W: www.pacewater.com
TAYLOR B. PIERCE R.C.E. 70097 DATE

SHEET S3.2
63 OF 99 SHEETS

JOB NO. 23364

PK ASSOCIATES, LLC
6900 E. Belleview Ave. #200
Greenwood Village, Colorado 80111
Phone: (720) 799-1058
Email: cadd@pkastructural.com
Website: www.pkastructural.com

NOTES:

1. CONCRETE SLAB.
2. 8" CONCRETE WALL/SLAB W/ #5 AT 12" O.C. EACH WAY.
3. HIGH DENSITY FOAM.
4. GRATING AND ATTACHMENT PER SHEET M5.3.
5. DOWELS TO MATCH AND LAP WALL REINFORCING.
6. 2 CONT. #4.
7. #4x60" AT 12" O.C.
8. EQUIPMENT AND ATTACHMENT BY OTHERS.
9. CONCRETE WALL.

116 SECTION – DEWATERING PLAN

NO SCALE

NO	BY	DATE	REVISIONS	DATE	APP.

THESE DRAWINGS ARE THE PROPERTY OF P.A.C.E. AND SHALL NOT BE REPRODUCED IN ANY MANNER NOR BE USED FOR CONSTRUCTION UNLESS STAMPED "ISSUED FOR CONSTRUCTION".

Registered Professional Engineer (Civil)
CERTIFICATE NO.
70374
JAMES APPLEYARD
10/31/25
Date Signed
ARIZONA, U.S.A.

PREPARED BY: PKA
DESIGNED BY: JA
DRAWN BY: NS
CHECKED BY: JA
DATE: SEP 2025
JOB NO.: 23364
SCALE: AS NOTED

TITLE: **FOUNDATION DETAILS**

JOB: TOWN OF JEROME
WASTEWATER
TREATMENT PLANT
YAVAPAI AZ

ISSUED FOR BID

PREPARED BY:
PACE
Advanced Water Engineering
8723 E. VIA DE VENTURA, SUITE A-100, SCOTTSDALE, CA 85258
P.: (480) 991-3595 | www.pacewater.com
TAYLOR B. PIERCE R.C.E 70097 DATE

SHEET
S3.3
64 OF 99 SHEETS

JOB NO. 23364

PK ASSOCIATES, LLC
6900 E. Belleview Ave. #200
Greenwood Village, Colorado 80111
Phone: (720) 799-1058
Email: cadd@pkastructural.com
Website: www.pkastructural.com

NOTES:
1. CONCRETE WALL.
2. CONCRETE SLAB.
3. #5x 36" ⌐ 36" AT SPACING TO MATCH SLAB REINFORCING.
4. CONT. BAR AT HOOK.
5. GRATING AT 209A PER DETAIL 108.

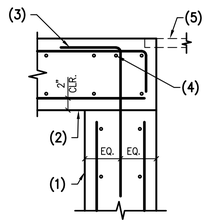

209 CONCRETE WALL AT CONCRETE WALL
209A AS NOTED
NO SCALE

NOTES:
1. STEEL BEAM.
2. STEEL DECK – SEE PLANS FOR DIRECTION.
3. 1/4" CONTINUOUS BENT PLATE.

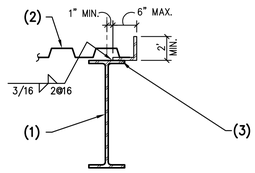

206 STEEL ROOF DECK AT STEEL BEAM
NO SCALE

NOTES:
1. CONCRETE WALL.
2. 1/2"x8"x4" STEEL PLATE W/ 2– 1/2"ø H.S. AT 5" O.C.
3. CONTINUOUS LEDGER ANGLE.
4. STEEL DECK.

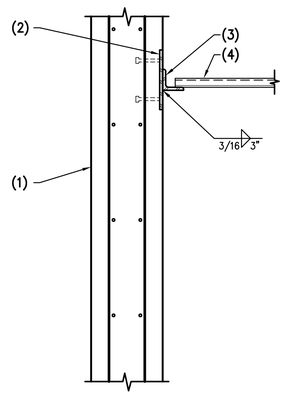

204 LEDGER ANGLE AND STEEL DECK AT CONCRETE WALL
NO SCALE

NOTES:
1. STEEL LEDGER ANGLE – FOR SIZE AND LOCATION, SEE PLAN.
2. STEEL PLATE 1/2"x3"x12" LONG.
3. STEEL PLATE 1/2"x3".

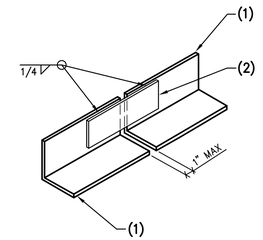

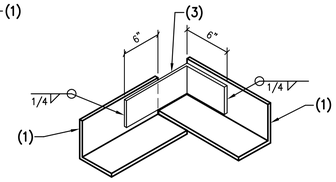

AT CORNERS

201 TYPICAL SPLICE IN CONTINUOUS STEEL LEDGER ANGLE
NO SCALE

NOTES:
1. CONCRETE WALL.
2. CONT. L2x2x1/4" W/ 1/2"ø H.S. AT 18" O.C.
3. GRATING AND ATTACHMENT BY OTHERS.

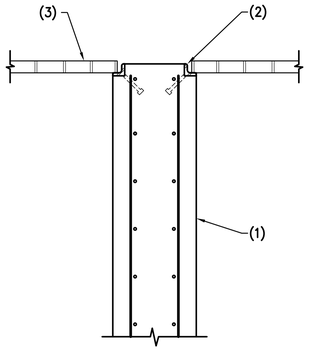

210 STEEL GRATING AT CONCRETE WALL
NO SCALE

NOTES:
1. CONCRETE WALL.
2. C6x8.2 AT 4'–0" O.C. MAX.
3. CONT. L4x4x1/4.
4. CONT. L2x2x1/4" W/ 1/2"ø H.S. AT 18" O.C.
5. GRATING AND ATTACHMENT BY OTHERS.
6. COPE TOP FLANGE.
7. 1/2"x8"x8" STEEL PLATE W/ 2– 3/4"ø H.S. AT 5" O.C.
8. 3– 3/4"ø H.S. AT 4" O.C. CENTERED ON CHANNEL.
9. HANDRAIL POST AND ATTACHMENT BY OTHERS. (4'–0" O.C. MAX).
10. 1/2"x8"x4" STEEL PLATE W/ 2– 3/4"ø H.S. AT 5" O.C.

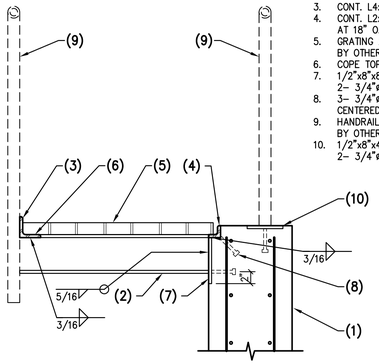

207 WALKWAY AT CONCRETE WALL
NO SCALE

NOTES:
1. HSS SQUARE OR RECTANGULAR COLUMN.
2. STEEL BEAM.
3. STEEL SHEAR PLATE. SEE TYP. BOLT SCHEDULE.
4. FOR SIZE, TYPE, AND NUMBER OF BOLTS, REFER TO TYP. BOLT SCHEDULE.
5. 1/2" STEEL CAP PLATE.
6. AT t ≤ 1/4" USE FILLET WELD SIZE TO MATCH "t". AT t > 1/4" USE 5/16" FILLET.
7. 1/2" STEEL BACKER PLATE x BEAM DEPTH x WIDTH OF COLUMN LESS 1".
8. TOP OF COLUMN AS OCCURS.
9. DEPTH TO MATCH JOIST SHOE.
10. BEAM BOTH SIDES WHERE OCCURS.

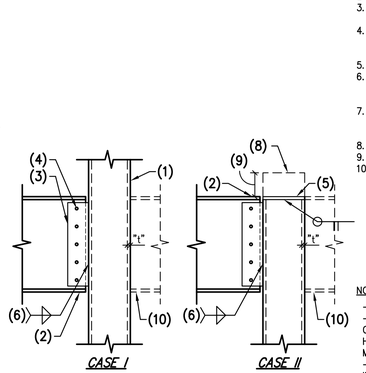

NOTES:
–DETAIL A MAY BE USED TYP. U.N.O.
–DETAIL B MAY BE USED AT CONTRACTOR'S OPTION WHERE HSS MIN. FLANGE THICKNESSES ARE MET PER SCHEDULE.
–WHERE COLUMNS ARE RECTANGULAR IN LIEU OF SQUARE, THE GREATER FLANGE LENGTH (I.E. WORST CASE) APPLIES PER SCHEDULE.
–CONTRACTOR MAY INCREASE PLAN COLUMN THICKNESS AT THEIR OPTION.

B SHEAR PLATE TO COLUMN

MINIMUM COLUMN FLANGE THICKNESS FOR DETAIL B

HSS MEMBER	THICKNESS ("t")
4x4	1/4"
5x5	1/4"
6x6	1/4"
7x7	1/4"
8x8	5/16"
9x9	5/16"
10x10	3/8"
12x12	3/8"
14x14	1/2"
16x16	1/2"

NOTES:
1. MASONRY WALL.
2. CONTINUOUS GROUTED BOND BEAM PER G.S.N.
3. CONTINUOUS LEDGER ANGLE.
4. STEEL DECK – FOR DIRECTION, SEE PLAN.
5. 1/2"x8"x4" STEEL PLATE W/ 2– 1/2"ø H.S. AT 5" O.C.

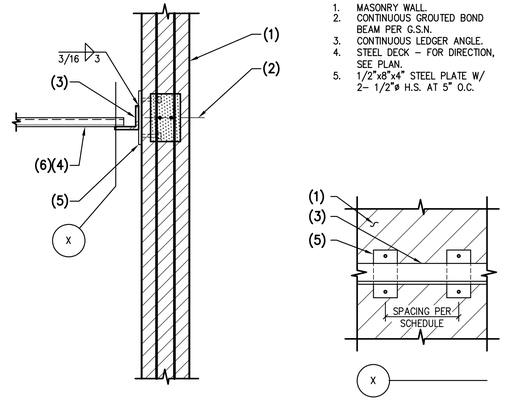

202 LEDGER ANGLE AND STEEL DECK AT MASONRY WALL
NO SCALE

NOTES:
1. CONCRETE WALL.
2. CONT. L2x2x1/4" W/ 1/2"ø H.S. AT 18" O.C.
3. GRATING AND ATTACHMENT BY OTHERS.
4. 1/2"x8"x4" STEEL PLATE W/ 2– 3/4"ø H.S. AT 5" O.C.
5. HANDRAIL POST AND ATTACHMENT BY OTHERS. (4'–0" O.C. MAX).

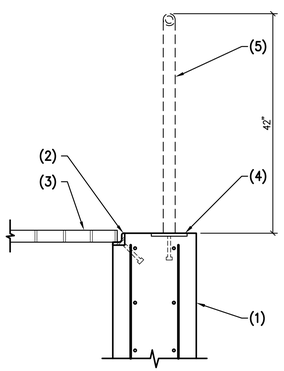

211 EDGE OF GRATING AT CONCRETE WALL
NO SCALE

NOTES:
1. STEEL BEAM.
2. CONCRETE WALL.
3. 3/8" STEEL SHEAR TAB.
4. 2– 1"ø BOLTS.
5. 1/2"x6"x14" STEEL PLATE W/ 3– 3/4"ø H.S. AT 5" O.C.

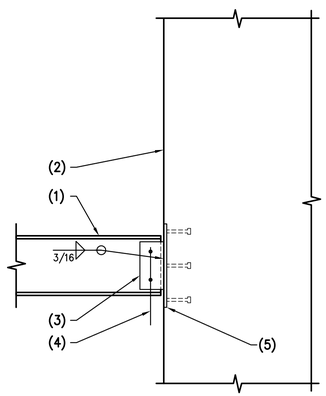

208 STEEL BEAM AT CONCRETE WALL
NO SCALE

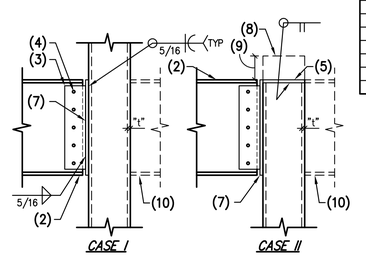

A SHEAR PLATE TO BACKER PLATE TO COLUMN

205 TYPICAL BEAM TO HSS STEEL COLUMN
NO SCALE

NOTES:
1. MASONRY WALL.
2. CONTINUOUS 8" DEEP GROUTED BOND BEAM.
3. SOLID GROUT 6" ALL AROUND ALL ANCHORS.
4. STEEL PLATE PER SCHEDULE BELOW.
5. STEEL BEAM.
6. 3/8" STEEL PLATE.
7. 1 1/2" SLOTTED HOLES.
8. FOR SIZE, TYPE, AND NUMBER OF BOLTS SEE TYPICAL BOLT SCHEDULE.

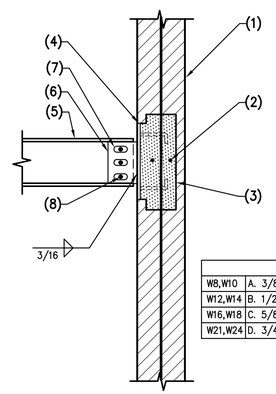

EMBED PLATE SCHEDULE	
W8,W10	A. 3/8"x4"x12" WITH 2– 3/4"ø H.S. AT 9" O.C.
W12,W14	B. 1/2"x8"x14" WITH 4– 3/4"ø H.S. AT 5"x11" O.C.
W16,W18	C. 5/8"x11"x19" WITH 6– 3/4"ø H.S. AT 8" O.C.
W21,W24	D. 3/4"x11"x27" WITH 8– 3/4"ø H.S. AT 8" O.C.

203 STEEL BEAM TO MASONRY WALL CONNECTION
NO SCALE

NO	BY	DATE	REVISIONS	DATE	APP.

Registered Professional Engineer (Civil)
CERTIFICATE NO.
70374
JAMES APPLEYARD
10/31/25
Date Signed
ARIZONA, U.S.A.

PREPARED BY: PKA
DESIGNED BY: JA
DRAWN BY: NS
CHECKED BY: JA
SCALE: AS NOTED
DATE: SEP 2025
JOB NO.: 23364

THESE DRAWINGS ARE THE PROPERTY OF P.A.C.E. AND SHALL NOT BE REPRODUCED IN ANY MANNER NOR BE USED FOR CONSTRUCTION UNLESS STAMPED "ISSUED FOR CONSTRUCTION".

TITLE: FRAMING DETAILS

JOB: TOWN OF JEROME
WASTEWATER
TREATMENT PLANT
YAVAPAI AZ

ISSUED FOR BID

PREPARED BY:
PACE
Advanced Water Engineering
8723 E. Via de Ventura Suite 240 | SCOTTSDALE, CA 85258
P: (480) 991-3995 | www.paceadvisor.com
TAYLOR B. PIERCE R.C.E 70097 DATE

SHEET
S4.1
65 OF 99 SHEETS

JOB NO. 23364

PK ASSOCIATES, LLC
6900 E. Belleview Ave. #200
Greenwood Village, Colorado 80111
Phone: (720) 799-1058
Email: cadd@pkastructural.com
Website: www.pkastructural.com

NOTES:

1. STEEL BEAM.
2. 3/8" STEEL SHEAR PLATE –USE 5/8" STEEL SHEAR PLATE WHERE "D" = 27" OR GREATER.
3. FOR SIZE, TYPE & NUMBER OF BOLTS, SEE TYPICAL BOLT SCHEDULE.
4. "D" = LESSER OF BEAM DEPTHS AS OCCURS.
5. WELD 3 SIDES TYPICAL – USE SAME CONNECTION AT STIFFENER PLATES WHEN REQUIRED.

NOTE:
AT ONE SIDED CONNECTIONS, INSTALL 3/8" STIFFENER PLATE OPPOSITE SHEAR PLATE.

212 *TYPICAL CONNECTION WIDE FLANGE BEAM TO BEAM*

NO SCALE

NO	BY	DATE	REVISIONS	DATE	APP.

Registered Professional Engineer (Civil)
CERTIFICATE NO.
70374
JAMES APPLEYARD
Date Signed 10/31/25
ARIZONA, U.S.A.

PREPARED BY: PKA
DESIGNED BY: JA
DRAWN BY: NS
CHECKED BY: JA
SCALE: AS NOTED
DATE: SEP 2025
JOB NO.: 23364

THESE DRAWINGS ARE THE PROPERTY OF P.A.C.E. AND SHALL NOT BE REPRODUCED IN ANY MANNER NOR BE USED FOR CONSTRUCTION UNLESS STAMPED "ISSUED FOR CONSTRUCTION".

TITLE
FRAMING DETAILS

JOB
TOWN OF JEROME
WASTEWATER
TREATMENT PLANT
YAVAPAI AZ

ISSUED FOR BID

PREPARED BY:
PACE
Advanced Water Engineering
9733 E. VIA de COMMERCIO, SUITE A-4, SCOTTSDALE, CA 85258
P: (480) 991-3595 | www.pacewater.com
TAYLOR B. PIERCE R.C.E 70097 DATE

SHEET
S4.2
66 OF 99 SHEETS

JOB NO. 23364

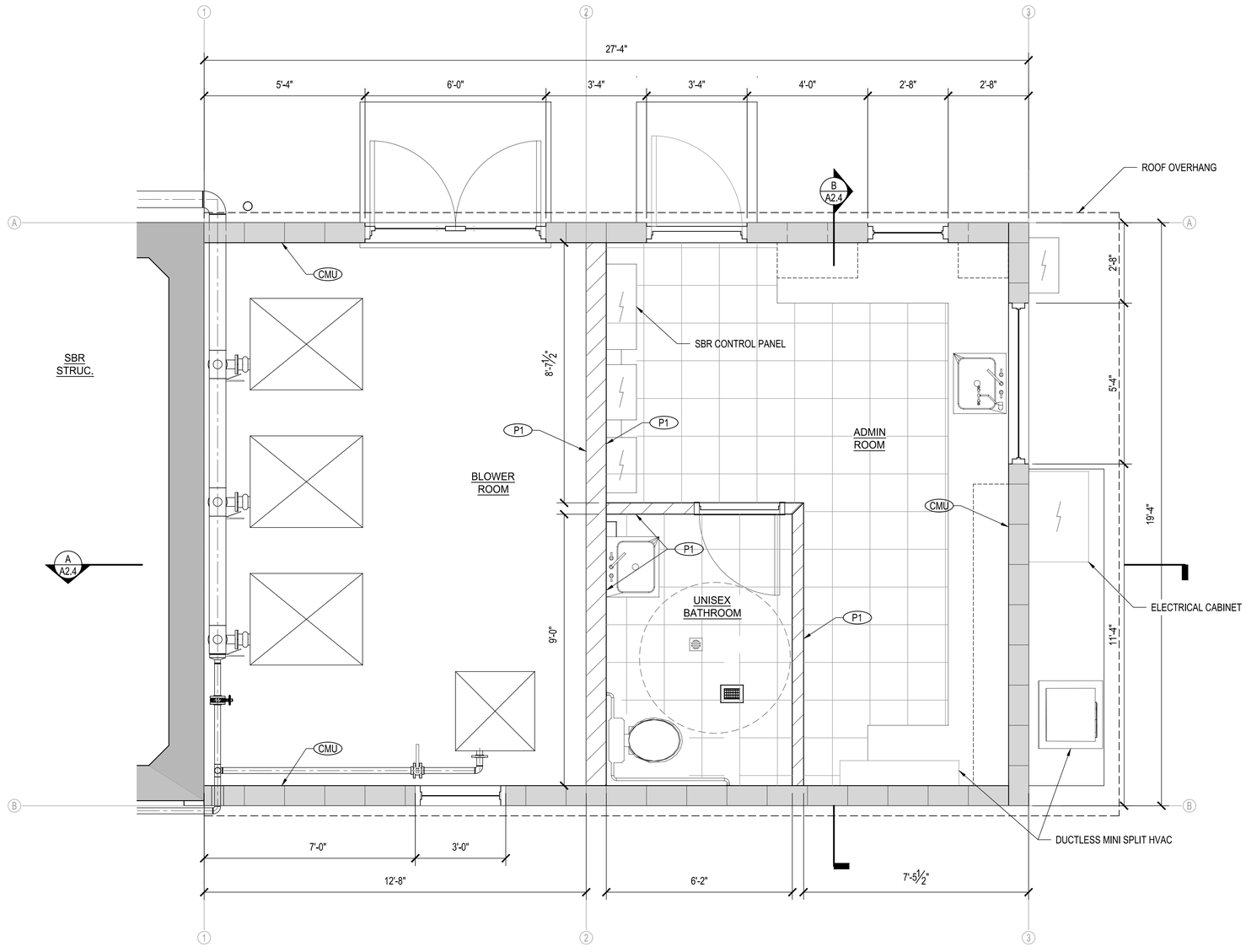

ARCH. PLAN
SCALE: 1/2" = 1'-0"

NORTH

GENERAL NOTES

1. ALL INTERIOR WALLS, EXTERIOR WALLS, AND CEILINGS SHALL BE INSULATED PER SPECIFICATION SECTION 07 2100 OF THE CONTRACT DOCUMENTS.

DOOR & WINDOW NOTES:

1. ALL EXITS SHALL OPEN FROM THE INSIDE WITHOUT THE USE OF A KEY AND/OR SPECIAL KNOWLEDGE (U.N.O.). MANUALLY OPERATED EDGE OR SURFACE MOUNTED FLUSH BOLTS AND SURFACE BOLTS ARE PROHIBITED.
2. PAINT STEEL DOORS AND FRAMES WITH ONE (1) COAT OF RUST INHIBITING PRIMER AND ONE (1) COAT OF SEMI-GLOSS ALKYD ENAMEL.
3. ALL INTERIOR DOORS TO BE SOLID CORE MASONITE DOOS IN "TIMELY" FRAMES (U.N.O.).
4. ALL DOOR HARDWARE TO BE AL SERIES "SCHLAGE" LEVER TYPE WITH FINISH PER OWNER'S DIRECTION. VERIFY KEYING WITH OWNER.
5. PROVIDE DOOR STOPS AS REQUIRED AT FLOOR AND/OR WALL.
6. ALL DOORS TO BE MASTER KEYED. VERIFY KEYING WITH OWNER.
7. ALL THRESHOLDS TO BE MAXIMUM HEIGHT OF 1/2".
8. DOOR LOCK AND LATCHES SHALL COMPLY WITH UBC SECTION 1004.3 AND ADA.
9. THE AUTHORITY HAVING JURISDICTION MAY INCREASE THE MAXIMUM EFFORT TO OPERATE FIRE DOORS IN ORDER TO ACHIEVE POSITIVE LATCHING, BUT NOT EXCEEDING THE 15 LP MAX.
10. MAXIMUM EFFORT TO OPERATE EXTERIOR DOORS IS 5 LBS.
11. HAND-ACTIVATED DOOR OPENING HARDWARE SHALL BE CENTERED BETWEEN 30" AND 44" A.F.F.
12. PROVIDE 1/4" TEMPERED GLASS AT ALL INTERIOR WINDOW LOCATIONS.
13. MAIN EXTERIOR DOORS: PROVIDE VISIBLE DURABLE SIGN ON THE EGRESS SIDE, ON OR ADJACENT TO THE DOOR, STATING: "THIS DOOR TO REMAIN UNLOCKED WHEN THE BUILDING IS OCCUPIED." THE SIGN SHALL BE IN LETTERS 1" HIGH ON A CONTRASTING BACKGROUND.

FLOOR PLAN NOTES:

1. ALL INSULATION SHALL HAVE FLAME SPREAD RATE NOT TO EXCEED 25 AND A SMOKE DENSITY NOT TO EXCEED 450 WHEN TESTED IN ACCORDANCE WITH STANDARD NO. 42-1.
2. PROVIDE 4'-0" HIGH ANGLE IRON DOOR GUARDS AT FLOOR OF EACH JAMB OF EACH OVERHEAD DOOR OPENING.
3. ALL NEW DRYWALL SHALL BE TAPED, TEXTURED, AND PAINTED WITH ONE (1) COAT VINYL ACRYLIC WALL SEALER AND TWO (2) COATS LO-GLO ACRYLIC SEMI-GLOSS ENAMEL. PROVIDE SAMPLE FOR OWNER'S APPROVAL. PROVIDE LIGHT KNOCKDOWN TEXTURE.
4. RESTROOM DRYWALL SHALL BE WATER RESISTANT TYPE X. RESTROOMS TO HAVE +4' HIGH 12"x12" GLAZED CERAMIC TILE BY "DAL TALE" OR EQUAL, FROM STANDARD COLOR SELECTION WAINSCOT. PAINT DRYWALL ABOVE WITH ONE (1) COAT PRIMER AND TWO (2) COATS SEMI-GLOSS ENAMEL PAINT. USE DUNN-EDWARDS OR FRAZEE.
5. BLOWER ROOM: PROVIDE SAWCUT CONTROL JOINTS AT 5'x5' MINIMUM FOR AREAS WITH SEALED CONCRETE FINISHED FLOOR. RESTROOM AND OPERATIONS ROOM TO RECEIVE 12"x12" VINYL COMPOSITE TILES. PROVIDE VCT AND CERAMIC TILE SAMPLES FOR OWNER'S SELECTION.
6. PROVIDE 4" CERAMIC TILE BASE TO MATCH FLOOR TILE. AT RESTROOM, PROVIDE 6" COVERED CERAMIC TILE BASE.
7. SEE PLUMBING DRAWING FOR FLOOR AREA DRAINAGE AND RESTROOM. PLUMBING DRAWINGS SHALL APPLY FOR APPLICABLE FIXTURES.

WALL FINISH LEGEND

P1 DUNN EDWARDS - FOSSIL

CMU CLEAR SEALER

INSTAL 4" HIGH RESILIENT BASE FOR ALL ROOMS.

FLOOR FINISH LEGEND

SEALED CONCRETE

12"X12" VINYL COMPOSITE TILES

NO	BY	DATE	REVISIONS	DATE	APP.

Registered Professional Engineer (Civil) CERTIFICATE NO. 70097 TAYLOR B. PIERCE Registered Professional ARIZONA, U.S.A. Expires 12/31/28

PREPARED BY: PACE
DESIGNED BY: NE
DRAWN BY: DS, WW
CHECKED BY: TP
SCALE: AS NOTED
DATE: NOV 2025
JOB NO.: B614

THESE DRAWINGS ARE THE PROPERTY OF P.A.C.E. AND SHALL NOT BE REPRODUCED IN ANY MANNER NOR BE USED FOR CONSTRUCTION UNLESS STAMPED 'ISSUED FOR CONSTRUCTION'.

TITLE: **BLOWER OPS ARCH PLAN**

JOB: TOWN OF JEROME WASTEWATER TREATMENT PLANT — YAVAPAI CO. AZ

100% ISSUED FOR BID

PREPARED BY:
PACE
Advanced Water Engineering
8723 E. VIA DE VENTURA, SUITE A-100, SCOTTSDALE, CA 85258
P: (480) 991-3595 | www.pacewater.com
TAYLOR B. PIERCE R.C.E. 70097 DATE

SHEET
A1.0
67 OF 99 SHEETS

JOB NO. B614

W:\B614\Engineering\B614-30sheets\B614 - A2.0 BLOWER OPS ARCH PLAN.dwg - Tab: A1.0 - by reddington on 11/21/25 at 12:26:37 PM

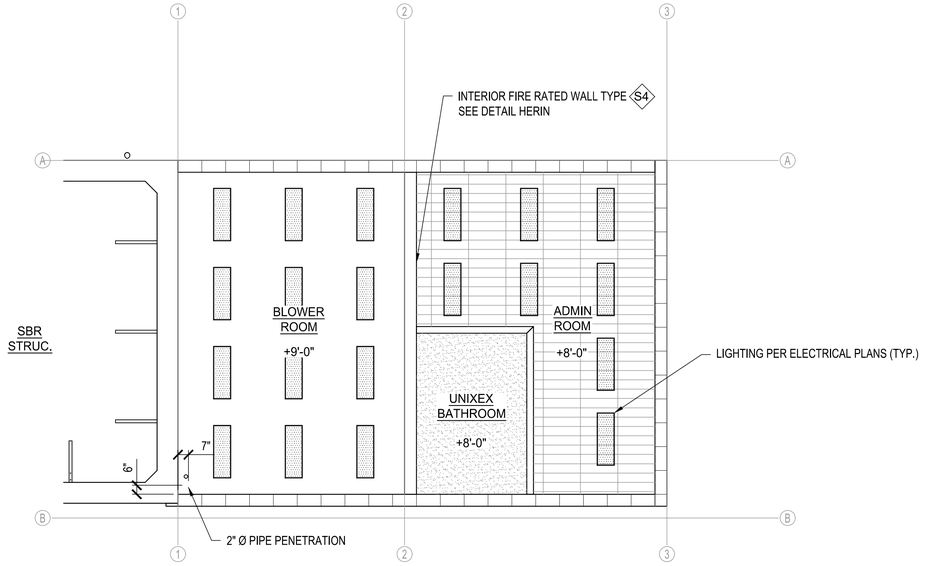

REFLECTED CEILING PLAN

SCALE: 1/4" = 1'-0"

CEILING NOTES:

1. T-BAR SUSPENSION SYSTEM TO BE PROVIDED BY ARMSTRONG OR EQUAL. SEE REFLECTED CEILING PLANS FOR LOCATIONS: 2'X4'X5/8" TILE AND CEILING HEIGHTS. CEILINGS TO BE LAID OUT CENTERED IN ROOMS IN BOTH DIRECTIONS AS SHOWN. HANG T-BAR SUSPENSION SYSTEM FROM ROOF JOISTS WITH DIAGONAL HANGERS TO PREVENT SAGGING. COLOR BY OWNER.
2. RESTROOM PER REFLECTED CEILING PLAN TO HAVE 5/8" DRYWALL CEILINGS. SUPPORT WITH 3-5/8"X22 GAUGE METAL STUDS AT 16" O.C. FOR SPANS 8' OR LESS. FOR SPANS OVER 8' USE 6"X22 GAUGE METAL STUDS AT 16".

CEILING FINISH LEGEND:

2'x4'x5/8" SUSPENDED T-BAR CEILING

5/8" DRYWALL CEILING

EXPOSED CEILING

2' x 4' RECESSED
FLORESCENT LIGHT FIXTURE

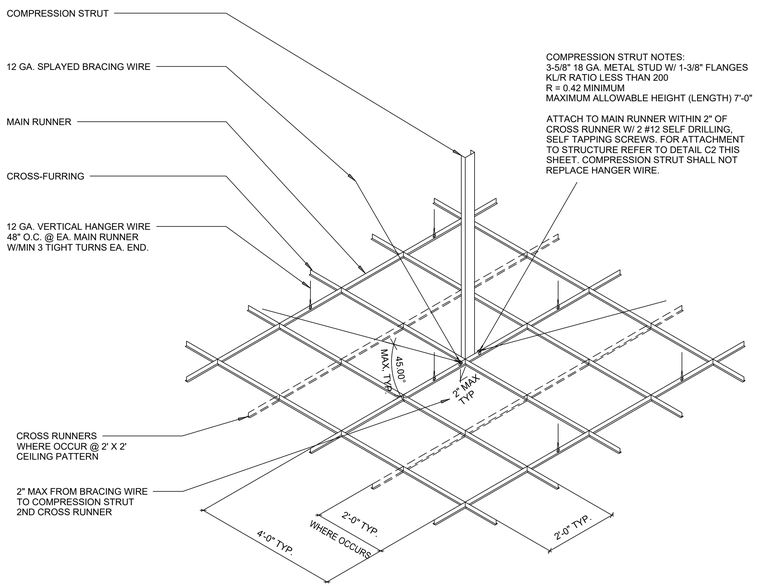

COMPRESSION STRUT NOTES:
3-5/8" 18 GA. METAL STUD W/ 1-3/8" FLANGES
KL/R RATIO LESS THAN 200
R = 0.42 MINIMUM
MAXIMUM ALLOWABLE HEIGHT (LENGTH) 7'-0"

ATTACH TO MAIN RUNNER WITHIN 2" OF CROSS RUNNER W/ 2 #12 SELF DRILLING, SELF TAPPING SCREWS. FOR ATTACHMENT TO STRUCTURE REFER TO DETAIL C2 THIS SHEET. COMPRESSION STRUT SHALL NOT REPLACE HANGER WIRE.

NOTE: PROVIDE SETS OF FOUR SPLAYED BRACING WIRES, ORIENTED 90 DEGREES FROM EACH OTHER, AND COMPRESSION STRUT AT A SPACING NOT MORE THAN 12'-0" x 12'-0" ON CENTER. PROVIDE 12 GAUGE MINIMUM SPLAYED BRACING WIRES FASTENED WITH NOT LESS THAN FOUR TIGHT TURNS IN 1-1/2 INCHES AT BOTH ENDS OF WIRE. SLOPE OF SPLAYED BRACING WIRES SHOULD NOT EXCEED 45 DEGREES FROM THE PLANE OF THE CEILING.

NOTE: PROVIDE HANGER WIRES AT A SPACING NOT MORE THAN 4'-0" X 4'-0" ON CENTER. PROVIDE 8 OR 12 GAUGE MINIMUM HANGER WIRE FASTENED WITH NOT LESS THAN THREE TIGHT TURNS IN 1-1/2 INCHES AT BOTH ENDS OF WIRE.

2'x4' SUSPENDED LAY-IN CEILING GRID

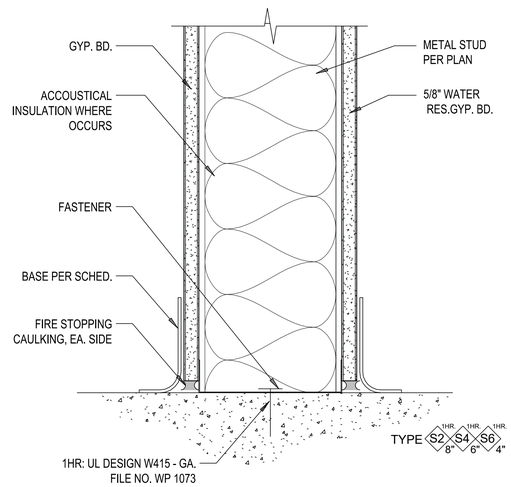

INTERIOR RATED WALL

NO	BY	DATE	REVISIONS	DATE	APP.

THESE DRAWINGS ARE THE PROPERTY OF P.A.C.E. AND SHALL NOT BE REPRODUCED IN ANY MANNER NOR BE USED FOR CONSTRUCTION UNLESS STAMPED 'ISSUED FOR CONSTRUCTION'.

Registered Professional Engineer (Civil) CERTIFICATE NO. 45751 TAYLOR B. PIERCE Signed ARIZONA U.S.A. Expires 12/31/28

PREPARED BY:	PACE
DESIGNED BY:	NE
DRAWN BY:	DS, WW
CHECKED BY:	TP
SCALE:	AS NOTED
DATE	NOV 2025
JOB NO.	B614

TITLE: **BLOWER OPS ARCH REFLECTED CEILING PLAN**

JOB: TOWN OF JEROME WASTEWATER TREATMENT PLANT — YAVAPAI CO. AZ

100% ISSUED FOR BID

PREPARED BY: TAYLOR B. PIERCE — R.C.E. 70097 — DATE

PACE
Advanced Water Engineering
8723 E. VIA DE VENTURA, SUITE 290 | SCOTTSDALE, CA 85258
P: (480) 991-3995 | www.pacewater.com

SHEET **A2.0**

68 OF 99 SHEETS

JOB NO. B614

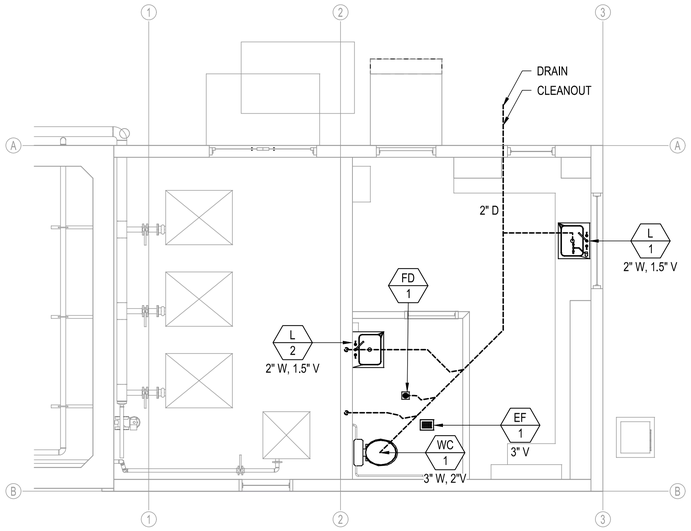

SEWER PLUMBING PLAN
SCALE: 1/4" = 1'-0"

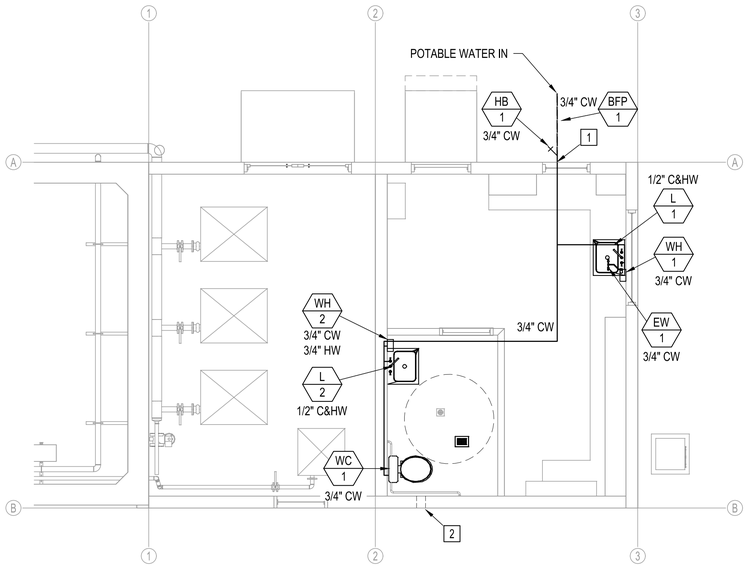

WATER PLUMBING PLAN
SCALE: 1/4" = 1'-0"

PLUMBING NOTES

1. ALL EQUIPMENT & FIXTURE COLD WATER AND HOT WATER CONNECTION SHALL BE INSTALLED W/ ISOLATION VALVE.
2. ALL PLUMBING AND HVAC LINES ARE SCHEMATIC. CONTRACTOR TO INSTALL PER BUILDING CODES.

CONSTRUCTION NOTES

1 INSTALL 2" REDUCED PRESSURE-TYPE BACKFLOW PREVENTER UNIT & ASSEMBLY COMPONENTS. BACKFLOW PREVENTER SHALL BE FEBCO, WATTS, WILKENS, OR APPROVED EQUAL.

2 INSTALL EXHAUST VENT DUCT, DISCHARGE TO WALL.

FIXTURE SCHEDULE

ITEM	FIXTURE	ROUGH-IN CONNECTIONS				DESCRIPTION
		COLD WATER	HOT WATER	WASTE	VENT	(ALL PLUMBING FIXTURES MUST BE APPROVED BY THE ENGINEER & OWNER PRIOR TO PURCHASING)
WC 1	WATER CLOSET (ADA)	1"	--	3"	2"	KOHLER OR AMERICAN STANDARD ADA HEIGHT ELONGATED WITH SLOAN AUTOMATIC FLUSH VALVE.
L 1	LAVATORY	1/2"	1/2"	2"	1-1/2"	ADA BARRIER FREE LAVATORY, COUNTER MOUNTED, WITH EXTRA HOLE FOR SOAP DISPENSER, METERED, SINGLE HANDLE SELF CLOSING FAUCET, LOOSE KEY STOPS WITH RIGID SUPPLIES, GRID DRAIN, P-TRAP.
L 2	SINK	1/2"	1/2"	2"	1-1/2"	ADA BARRIER FREE SINK, WALL MOUNTED, WITH EXTRA HOLE FOR SOAP DISPENSER, METERED, SINGLE HANDLE SELF CLOSING FAUCET, LOOSE KEY STOPS WITH RIGID SUPPLIES, GRID DRAIN, P-TRAP.
WH 1	WATER HEATER	3/4"	3/4"	--	--	RHEEM PERFORMANCE TANKLESS ELECTRIC WATER HEATER. 13 KW, 2.54 GPM
WH 2	WATER HEATER	3/4"	3/4"	--	--	RHEEM PERFORMANCE TANKLESS ELECTRIC WATER HEATER. 13 KW, 2.54 GPM
FD 1	FLOOR DRAIN	--	--	SEE PLAN FOR SIZE		ZURN NO. Z-415-NH-B-P, CAST IRON, COMPLETE WITH ROUND POLISHED NICKEL-BRONZE TOP, FLASHING COLLAR, AND P-TRAP.
HVAC 1	HVAC		--	--	--	1 TON, 12,000 BTU AIR CONDITIONER HEAT PUMP (COOLING/HEATING) SPLIT SYSTEM W/ THERMOSTAT, 16 SEER, 120V 1PH, 60 HZ. INDOOR AIR HANDLER TO BE HORIZONTALLY MOUNTED PER MFR REQUIREMENTS. AIR COMPRESSOR INSTALLED ON ROOF PER PLAN.
HB 1	HOSE BIBB	3/4"	--	--	--	HOSE BIBB MOUNTED 24" ABOVE FINISHED FLOOR.
EW 1	EYE WASH STATION	3/4"	--	--	--	EMERGENCY EYEWASH STATION, GUARDIAN G1000 FAUCET OR EQUAL.
EF 1	EF		--	--	4	100 CFM EXHAUST FAN W/ 100W LIGHT, BROAN MODEL 750 OR EQUAL.
BFP 1	BFP	--	--	--	--	3/4" BACK FLOW PREVENTER

NO	BY	DATE	REVISIONS	DATE	APP.

Registered Professional Engineer (Civil) CERTIFICATE NO. 76087 TAYLOR B. PIERCE Signed ARIZONA, U.S.A. Expires 12/31/28

PREPARED BY: PACE
DESIGNED BY: NE
DRAWN BY: DS, WW
CHECKED BY: TP
SCALE: AS NOTED
DATE: NOV 2025
JOB NO.: B614

TITLE: BLOWER OPS ARCH SEWER & PLUMBING PLAN

JOB: TOWN OF JEROME WASTEWATER TREATMENT PLANT — YAVAPAI CO. AZ

100% ISSUED FOR BID

PREPARED BY: TAYLOR B. PIERCE R.C.E 70097 DATE

PACE
Advanced Water Engineering
8723 E. Via de Commercio, Suite 1, Scottsdale, CA 85258
P: (480) 991-3995 | www.pacewater.com

SHEET A3.0
69 OF 99 SHEETS

JOB NO. B614

THESE DRAWINGS ARE THE PROPERTY OF P.A.C.E. AND SHALL NOT BE REPRODUCED IN ANY MANNER NOR BE USED FOR CONSTRUCTION UNLESS STAMPED 'ISSUED FOR CONSTRUCTION'.

W:\B614\Engineering\B614-30\sheets\B614 - A3.0 BLOWER OPS ARCH PLAN.dwg - Tab: A3.0 - by nwddington on 11/21/25 at 12:26:57 PM

CONSTRUCTION NOTES:

1. INSTALL ALUMINUM WINDOW SYSTEM.
2. INSTALL HOLLOW METAL DOOR AND FRAME PER PLAN.

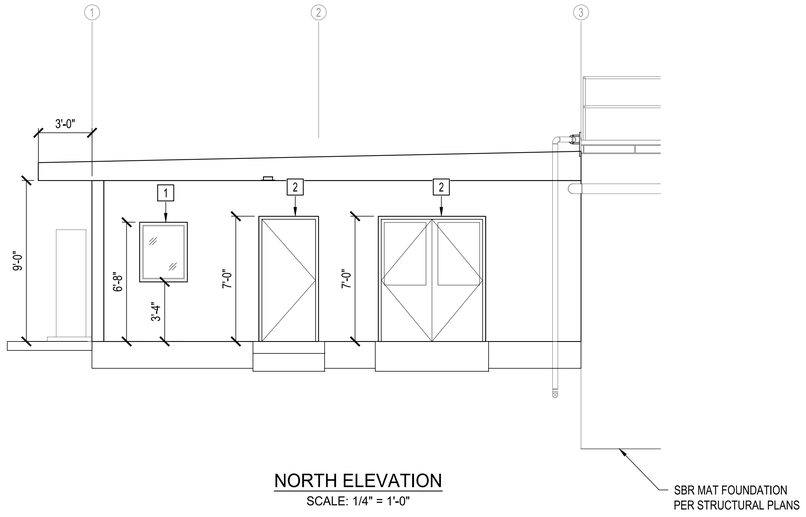

NORTH ELEVATION
SCALE: 1/4" = 1'-0"

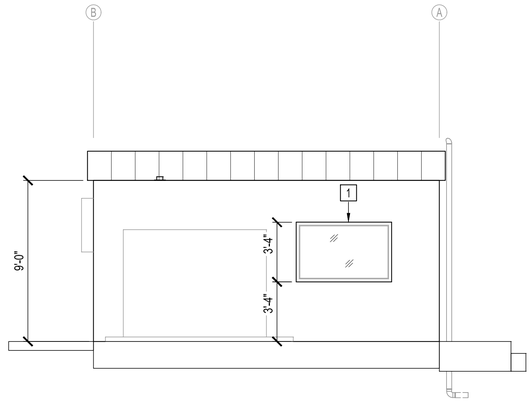

EAST ELEVATION
SCALE: 1/4" = 1'-0"

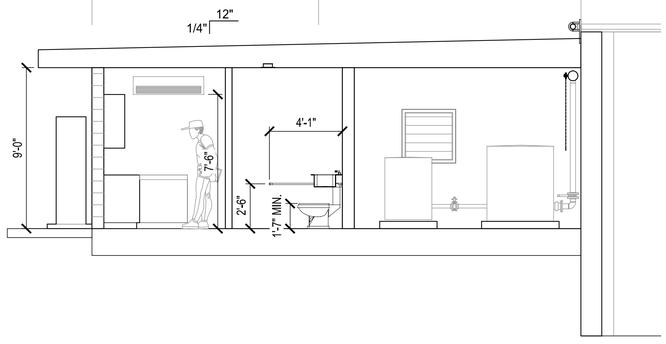

SECTION - A
SCALE: 1/4" = 1'-0"

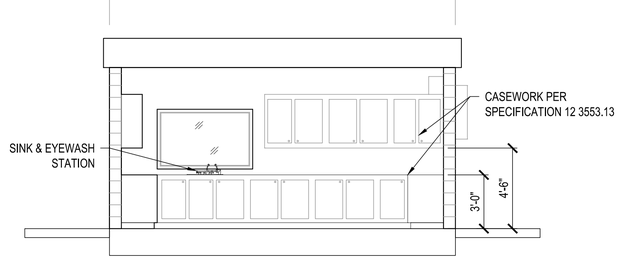

SECTION - B
SCALE: 1/4" = 1'-0"

THESE DRAWINGS ARE THE PROPERTY OF P.A.C.E. AND SHALL NOT BE REPRODUCED IN ANY MANNER NOR BE USED FOR CONSTRUCTION UNLESS STAMPED 'ISSUED FOR CONSTRUCTION'.

NO	BY	DATE	REVISIONS	DATE	APP.

Registered Professional Engineer (Civil) CERTIFICATE NO. 70097 TAYLOR B. PIERCE Signed STATE OF ARIZONA, U.S.A. Expires 12/31/28

PREPARED BY: PACE
DESIGNED BY: NE
DRAWN BY: DS, WW
CHECKED BY: TP
SCALE: AS NOTED
DATE: NOV 2025
JOB NO.: B614

TITLE: **BLOWER OPS ARCH ELEVATIONS & SECTIONS**

JOB: TOWN OF JEROME WASTEWATER TREATMENT PLANT — YAVAPAI CO. AZ

100% ISSUED FOR BID

PREPARED BY: TAYLOR B. PIERCE R.C.E 70097 DATE

PACE
Advanced Water Engineering
8723 E. VIA DE COMMERCIO, 1ST FLOOR | SCOTTSDALE, AZ 85258
P. (480) 991-3595 | www.pacewater.com

SHEET **A4.0**
70 OF 99 SHEETS

JOB NO. B614

W:\B614\Engineering\B614-3\Sheets\B614 - A2.3 BLOWER OPS ARCH SECTIONS.dwg - Tab: A4.0 - by reddington on 11/17/25 at 9:58:04 AM

TOWN OF JEROME WWTP
ELECTRICAL
JEROME, ARIZONA

GENERAL ELECTRICAL NOTES

1. ELECTRICAL WORK SHALL COMPLY WITH THE NATIONAL ELECTRIC CODE (2011), FEDERAL, STATE AND LOCAL JURISDICTION CODES.
2. ALL WORK SHALL BE DONE IN A NEAT, WORKMANLIKE, FINISHED AND SAFE MANNER, ACCORDING TO THE LATEST PUBLISHED NATIONAL ELECTRICAL CONTRACTORS ASSOCIATION STANDARDS OF INSTALLATION, UNDER COMPETENT SUPERVISION.
3. VISIT THE SITE PRIOR TO BIDDING TO BECOME FAMILIAR WITH EXISTING CONDITIONS AND ALL OTHER FACTORS WHICH MAY AFFECT THE EXECUTION OF THIS WORK. INCLUDE ALL RELATED COSTS IN THE INITIAL BID PROPOSAL.
4. CONTRACTOR IS RESPONSIBLE FOR VERIFYING LOCATIONS OF ALL EXISTING UTILITIES AND AVOIDING DAMAGE TO SAME. CONTRACTOR SHALL BE RESPONSIBLE FOR DAMAGE TO UTILITIES CAUSED AS A RESULT OF HIS WORK. CALL (602) 263-1100 FOR BLUE STAKES. IRRIGATION LINES LESS THAN 2" WILL NOT BE MARKED AND SHALL BE REPAIRED IN KIND BY THE CONTRACTOR.
5. PROPER PROTECTION OF THE CONSTRUCTION AREA FOR SAFETY SHALL BE THE RESPONSIBILITY OF THE CONTRACTOR. COVER ALL TRENCHES AT THE END OF EACH WORK DAY. BARRICADES SHALL BE INSTALLED AS DIRECTED BY THE EPCOR OR THE PROJECT INSPECTOR. THE SITE AND ALL WORK SHALL CONFORM TO OSHA REQUIREMENTS.
6. CONTRACTOR SHALL PAY FOR PERMITS AND INSPECTIONS AS MAY BE REQUIRED AND PROVIDE A CERTIFICATE OF INSPECTION TO THE EPCOR.
7. PROTECT ALL MATERIAL AND EQUIPMENT INSTALLED AGAINST DAMAGE BY OTHER TRADES, WEATHER CONDITIONS OR ANY OTHER CAUSES. EQUIPMENT FOUND DAMAGED OR IN OTHER THAN NEW CONDITION WILL BE REJECTED AS DEFECTIVE. ALL COMPONENTS SHALL BE FREE OF DUST, GRIT AND FOREIGN MATERIALS, AND LEFT AS NEW BEFORE FINAL ACCEPTANCE OF WORK.
8. LEAVE THE SITE CLEAN, REMOVE ALL DEBRIS, EMPTY CARTONS, TOOLS, CONDUIT, WIRE SCRAPS AND ALL MISCELLANEOUS SPARE EQUIPMENT AND MATERIALS USED IN THE WORK DURING CONSTRUCTION.
9. IT IS THE OBLIGATION OF THE CONTRACTOR TO ORGANIZE HIS WORK SO THAT A COMPLETE ELECTRICAL, INSTRUMENTATION, AND/OR CONTROL SYSTEM FOR THE FACILITY WILL BE PROVIDED AND SUPPORTED BY ACCURATE SHOP AND RECORD DRAWINGS, AND ALL O & M MANUALS.
10. ALL UNDERGROUND CONDUIT SHALL BE SCHEDULE 40 PVC, BURIED 24" MINIMUM BELOW FINISHED GRADE, UNLESS SPECIFICALLY NOTED OTHERWISE ON PLANS OR IN DETAILS.
11. PROVIDE EMT INDOOR AND GRS OUTDOOR FOR ABOVE GROUND CONDUIT. WHERE METALLIC CONDUITS COME IN CONTACT WITH DIRT, THEY SHALL BE HALF LAP WRAPPED WITH SCOTCH 50 TAPE TO 12" AFG. FITTINGS SHALL BE STEEL, THREADED TYPE WITH INSULATED THROATS. SECURELY ATTACH ALL SURFACE MOUNTED CONDUIT EVERY 10 FEET AND WITHIN 3 FEET OF EACH JUNCTION BOX, PER NEC ARTICLE 344.30. OUTDOOR FLEX CONDUIT SHALL BE LIQUID TITE UV RESISTANT (BLACK) FLEX CONDUIT.
12. UNDERGROUND VERTICAL AND HORIZONTAL 90 DEGREE BEND CONDUIT SHALL BE GRS HALF LAPPED WRAPPED WITH SCOTCHRAP 50 10-MIL TAPE TO 18" MIN ABOVE GRADE WITH A RADIUS OF NOT LESS THAN 18" (FACTORY BENDS ONLY SHALL BE USED)
13. UNDERGROUND CONDUITS SHALL BE A MINIMUM 1".
14. ALL FEEDERS AND BRANCH CIRCUIT WIRE SHALL BE COPPER TYPE XHHW (75 DEGREE C) FOR BELOW GRADE INSTALLATIONS (AND CONDUIT RISERS) AND THHN/THWN (75 DEGREE C) FOR ABOVE GRADE INSTALLATIONS. MINIMUM SIZE SHALL BE #12 AWG, UNLESS SPECIFICALLY NOTED OTHERWISE ON PLANS OR IN DETAILS. ALL WIRING SHALL BE IN CONDUIT.
15. A SEPARATE GREEN INSULATED EQUIPMENT GROUNDING CONDUCTOR (BOND) SHALL BE INSTALLED WITHIN EACH RACEWAY PER NEC CODE.
16. WHEN A PANEL IS SUPPLIED BY A FEEDER OR BRANCH CIRCUIT, ANY INSTALLED GROUNDED CONDUCTOR SHALL NOT BE CONNECTED TO THE EQUIPMENT GROUNDING CONDUCTOR (GEC) OR TO THE GROUNDING ELECTRODE(S) PER NEC ARTICLE 250.32(B).
17. BOND ALL ENCLOSURES PER NEC ARTICLE 250.96.
18. CONTRACTOR SHALL PLAN AND INSTALL WORK IN SUCH A MANNER AS TO CONFORM TO THE STRUCTURE, AVOID OBSTRUCTIONS, PRESERVE HEADROOM AND KEEP OPENINGS AND PASSAGEWAYS CLEAR.
19. CONTRACTOR SHALL PROVIDE ALL LABOR, MATERIAL, ETC. NECESSARY FOR A COMPLETE AND WORKABLE ELECTRICAL SYSTEM WHETHER OR NOT THESE ITEMS ARE SPECIFICALLY NOTED ON THESE DRAWINGS. INCIDENTAL ITEMS NOT INDICATED ON THE DRAWINGS, NOR MENTIONED IN SPECIFICATIONS THAT CAN BE LEGITIMATELY AND REASONABLY INFERRED TO BELONG TO THE WORK DESCRIBED OR BE NECESSARY IN GOOD PRACTICE TO PROVIDE A COMPLETE SYSTEM, SHALL BE FURNISHED AND INSTALLED AS THOUGH ITEMIZED HERE IN EVERY DETAIL.
20. CONTRACTOR IS RESPONSIBLE FOR AND SHALL PROVIDE ALL LABOR, MATERIAL, TRENCHING, CONDUIT, TRANSFORMER PAD AND OTHER REQUIRED EQUIPMENT PER UTILITY COMPANY PLANS AND SPECIFICATIONS NECESSARY FOR A COMPLETE UNDERGROUND CONDUIT SYSTEM FROM THE UTILITY POINT OF SERVICE TO THE UTILITY CO. TRANSFORMER AND FROM THE UTILITY CO. TRANSFORMER TO THE ELECTRICAL SERVICE ENTRANCE SECTION.
21. ALL TRENCHING, CONDUITS, ETC. SHALL BE ROUTED AND INSTALLED IN SUCH A MANNER THAT WILL NOT DAMAGE EXISTING FACILITIES. SHOULD DAMAGE OCCUR, IT WILL BE THE CONTRACTORS RESPONSIBILITY TO REPAIR DAMAGE TO THE SATISFACTION OF THE EPCOR OR INSPECTOR.
22. ALL CONDUIT RUNS SHOWN ON THIS PLAN ARE SCHEMATIC IN NATURE. THE CONTRACTOR SHALL MAKE SURE THAT ALL CONDUIT, ETC. FALLS WITHIN THE CONSTRUCTION AREA/RIGHT OF WAY. (THIS INCLUDES MAINTAINING ALL REQUIRED CLEARANCES.)
23. WHEN CROSSING PATHWAYS OR SIDEWALKS, CONTRACTOR SHALL BORE UNDER EXISTING CONCRETE WALKS AND SAWCUT ASPHALT WALKS. ASPHALT WALKS SHALL BE REPLACED IN KIND.
24. CONTRACTOR SHALL GUARANTEE WORK INSTALLED UNDER THE CONTRACT TO BE FREE FROM DEFECTIVE WORKMANSHIP AND MATERIALS, USUAL WEAR EXPECTED, AND SHOULD ANY SUCH DEFECTS DEVELOP WITHIN A PERIOD OF ONE YEAR ACCEPTANCE OF THE PROJECT BY THE EPCOR, THE CONTRACTOR SHALL REPAIR AND/OR REPLACE ANY DEFECTIVE ITEMS AND DAMAGE RESULTING FROM FAILURE OF THESE ITEMS, AT NO EXPENSE WHATSOEVER TO THE EPCOR.
25. CONTRACTOR SHALL IDENTIFY EQUIPMENT PANELS, DISCONNECTS, PANELS, INSTRUMENTS ETC. USING P&ID NOMENCLATURE WITH 3/32-INCH THICK LAMINATED PHENOLIC TYPE NAMEPLATES WITH 1/4-INCH MINIMUM HEIGHT LETTERS. NAMEPLATE TO BE BLACK MATTE FINISH SURFACE WITH WHITE LETTER ENGRAVING AND BE UV RESISTANT. ATTACH NAMEPLATE TO THE OUTSIDE PANEL FACE WITH TWO STAINLESS STEEL SELF-TAPPING SCREWS. NAMEPLATE SHALL READ THE EQUIPMENT NAME AND P&ID NOMENCLATURE. SEE NEC ARTICLE 230.70(B) FOR SERVICE EQUIPMENT.
26. ALL CIRCUITS SHALL BE LEGIBLY IDENTIFIED AT THE PANEL, JUNCTION BOXES AND AT ALL EQUIPMENT IN A PERMANENT MANNER (I.E. ETCHED PLATES, CONDUCTOR TAG, PERMANENT MARKER, ETC.). THE LABELING SHALL INCLUDE PANEL CIRCUIT NUMBER, "TO" AND "FROM" IDENTIFICATION, AND MARKED "SPARE" WHERE APPLICABLE.
27. CONTRACTOR SHALL TEST ELECTRICAL SYSTEM FOR SHORT CIRCUITS AND MEGGER TEST FEEDERS AND BRANCH CIRCUIT WIRING. CONTRACTOR SHALL INSURE LOW IMPEDANCE GROUND PATH SYSTEM. PROVIDE CERTIFIED TEST RESULTS FOR MEGGER TEST TO EPCOR UPON COMPLETION OF PROJECT.
28. CONTRACTOR SHALL PERFORM HIGH POTENTIAL (HIPOT) TESTING WHEN REQUIRED BY LOCAL JURISDICTION OR EPCOR.
29. CONTRACTOR SHALL PROVIDE A GROUND-FAULT COORDINATION STUDY AND PERFORM RECOMMENDED SETTINGS ON NEW OVERCURRENT PROTECTION DEVICES, PROVIDE LABELS ON EQUIPMENT INDICATING SETTINGS.
30. CONTRACTOR SHALL PROVIDE AN ARC-FLASH STUDY, PROVIDE ALL APPLICABLE LABELS ON NEW EQUIPMENT AFTER STUDY IS COMPLETED.
31. ALL CONDUIT AND J-BOXES SHOWN SHALL BE CONCEALED WHEN POSSIBLE. WHEN NOT POSSIBLE, CONDUIT AND J-BOXES MAY BE SURFACE MOUNTED WITH PERMISSION OF THE EPCOR OR EPCOR'S REPRESENTATIVE.
32. CONTRACTOR SHALL COORDINATE ALL EQUIPMENT CONNECTIONS WITH EQUIPMENT SUPPLIER PRIOR TO ROUGH-IN. PROVIDE ADDITIONAL FUSED DISCONNECT SWITCHES AND CONTROLS IF OVERCURRENT PROTECTION OR CONTROLS IS NOT INTEGRAL WITH UNITS.
33. ALL EQUIPMENT SHALL BE FUSE SIZED PER MANUFACTURES RECOMMENDATIONS AND U.L. APPROVAL.
34. ELECTRICAL DEVICES, DISCONNECT SWITCHES, ETC., SHALL BE SUPPORTED INDEPENDENT OF AND ISOLATED FROM EQUIPMENT VIBRATIONS.
35. FULL LOAD AMPS (FLA) SIZES, AS NOTED IN THESE DRAWINGS, ARE BASED ON SPECIFIED EQUIPMENT DATA. CONTRACTOR SHALL VERIFY NAMEPLATE FLA OF EQUIPMENT SUPPLIED AND COORDINATE ACCORDINGLY PER EQUIPMENT SUPPLIERS RECOMMENDATIONS.
36. ALL OUTDOOR ELECTRICAL EQUIPMENT SHALL BE NEMA-3R OR NEMA-4 ENCLOSURES.
37. CONDUITS OR RACEWAYS ROUTED FROM INDOORS TO OUTDOORS OR AS DESCRIBED IN NEC 300.7(A), SHALL BE SEALED WITH A PLIABLE SEALING COMPOUND AT A CONDUIT BODY OR AT A JUNCTION BOX BEFORE THE CONDUIT ENTERS THE COLDER ENVIRONMENT.
38. CONDUITS OR RACEWAYS INSTALLED IN AREAS WHERE ELEVATION CHANGES MAY CAUSE WATER OR MOISTURE TO ENTER THE ELECTRICAL EQUIPMENT THROUGH THE CONDUIT SHALL BE SEALED WITH A HERMETIC CONDUIT SEAL AT BOTH ENDS OF THE CONDUIT OR RACEWAY.
39. MATERIALS SHALL BE NEW AND OF THE BEST QUALITY WITH MANUFACTURER'S NAME PRINTED THEREON. MATERIALS SHALL BE MANUFACTURED IN ACCORDANCE WITH NEMA, ANSI, UNDERWRITER'S LABORATORY OR OTHER APPLICABLE STANDARDS AND RATED FOR HEAVY DUTY SERVICE.
40. ALL WIRING DEVICES SHALL BE SPECIFICATION GRADE. ALL 15 AND 20 AMP, 125 AND 250 VOLT, NONLOCKING RECEPTACLES INSTALLED OUTDOORS SHALL BE LISTED WEATHER-RESISTANT TYPE. ALL WEATHERPROOF WHILE IN-USE RECEPTACLE COVERS SHALL BE METAL.
41. SELECTION OF MATERIALS SHALL BE IN STRICT ACCORDANCE WITH THE DRAWINGS AND/OR SPECIFICATIONS. THE USE OF MANUFACTURER'S NAME, MODEL, AND NUMBER IS INTENDED TO ESTABLISH STYLE, QUALITY, APPEARANCE, USEFULNESS AND BID PRICE. CONTRACTOR SHALL SUBMIT TO THE EPCOR OR EPCOR'S REPRESENTATIVE FOR REVIEW AND APPROVAL (PRIOR TO ORDERING MATERIALS) COPIES OF EQUIPMENT SHOP DRAWINGS AS FOLLOWS: 1) LIGHT FIXTURES, 2) PUMP CONTROL PANEL 3) RTU/PLC 4) SERVICE ENTRANCE SECTION, 5) ELECTRICAL EQUIPMENT, 6) DISCONNECT SWITCHES, 7) TIME CLOCKS AND OTHER CONTROLS, 8) LIGHTING CONTACTORS AND 9) PULL BOXES. AT THE TIME OF EACH SUBMITTAL, THE CONTRACTOR SHALL DEFINE AND DELINEATE IN WRITING ANY DEVIATIONS FROM THE CONTRACT DOCUMENTS. THE REVIEW WILL BE ONLY FOR CONFORMANCE WITH THE DESIGN CONCEPT OF THE WORK AND FOR COMPLIANCE WITH THE INFORMATION CONTAINED IN THE CONTRACT DOCUMENTS. THE REVIEW OF A SPECIFIED ITEM, AS SUCH, WILL NOT INDICATE REVIEW OF THE ASSEMBLY IN WHICH THE ITEM FUNCTIONS. REVIEW BY THE EPCOR OR EPCOR'S REPRESENTATIVE WILL NOT RELIEVE THE CONTRACTOR FROM RESPONSIBILITY FOR ANY ERRORS OR OMISSIONS IN THE SUBMITTALS NOR FROM HIS RESPONSIBILITY FOR COMPLYING WITH THE CONTRACT DOCUMENTS.
42. THE SUBMITTALS SHALL BE NEATLY GROUPED AND ORGANIZED. PERTINENT INFORMATION SHALL BE HIGHLIGHTED, AND THE SPECIFIC PRODUCT SHALL BE IDENTIFIED. ALL SUBMITTALS SHALL BE COMPLETE, AND PRESENTED IN ONE PACKAGE. THE SUBMITTAL SHALL INCLUDE A COMPLETE LIST OF THE EQUIPMENT AND MATERIALS, INCLUDING THE MANUFACTURER'S NAME, PRODUCT SPECIFICATION, DESCRIPTIVE DATA, TECHNICAL LITERATURE, PERFORMANCE CHARTS, CATALOG CUTS, INSTALLATION INSTRUCTIONS, AND SPARE PART RECOMMENDATIONS FOR EACH DIFFERENT ITEM OF THE EQUIPMENT SPECIFIED.
43. ELECTRICAL CONTRACTOR SHALL HAVE A MINIMUM OF 5 YEARS EXPERIENCE WORKING IN THE WATER/WASTEWATER INDUSTRY AND PROVIDE REFERENCES.

ENGINEER OF RECORD

PACE ADVANCED WATER ENGINEERING
8723 E. VIA DE COMMERCIO, #A-204
SCOTTSDALE, AZ 85258
PHONE: (480) 991-3595
CONTACT: TAYLOR PIERCE
CONTACT: TPIERCE@PACEWATER.COM

ELECTRICAL ENGINEER

WRIGHT ENGINEERING CORPORATION
165 EAST CHILTON DRIVE
CHANDLER, AZ 85225
PHONE: (480) 497-5829
CONTACT: JACOB BIELEFELDT
EMAIL: JBIELEFELDT@WRIGHTENGINEERING.US

PROJECT ADDRESS

TOWN OF JEROME WASTEWATER TREATMENT PLANT
SEWER PLANT ROAD
JEROME, AZ 86331

PRINCIPAL OWNER

TOWN OF JEROME
600 CLARK STREET, P.O. BOX 335
JEROME, AZ 86331

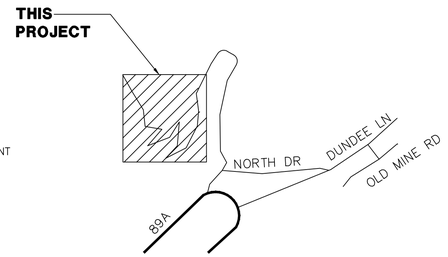

VICINITY MAP
NO SCALE
NORTH

SHEET INDEX

SHEET E1.1	ELECTRICAL COVER SHEET
SHEET E1.2	ELECTRICAL NOTES + LEGEND
SHEET E2.1	ELECTRICAL SINGLE LINE DIAGRAM I
SHEET E2.2	ELECTRICAL SINGLE LINE DIAGRAM II
SHEET E2.3	ELECTRICAL LOAD CALCULATIONS
SHEET E2.4	ELECTRICAL CONDUIT + WIRE TABLES I
SHEET E2.5	ELECTRICAL CONDUIT + WIRE TABLES II
SHEET E3.1	ELECTRICAL PROPOSED SITE PLAN
SHEET E3.2	ELECTRICAL SBR PLAN
SHEET E3.3	ELECTRICAL DEWATERING PAD
SHEET E3.4	ELECTRICAL BLOWER OPS
SHEET E3.5	ELECTRICAL DRYING BED LIFT STATION
SHEET E3.6	ELECTRICAL OVERFLOW BASIN
SHEET E4.1	ELECTRICAL DETAILS I
SHEET E4.2	ELECTRICAL DETAILS II
SHEET E4.3	ELECTRICAL DETAILS III
SHEET E4.4	ELECTRICAL DETAILS IV
SHEET E4.5	ELECTRICAL DETAILS V
SHEET E4.6	ELECTRICAL DETAILS VI
SHEET E5.1	ELECTRICAL SCHEMATICS I
SHEET E5.2	ELECTRICAL SCHEMATICS II
SHEET E5.3	ELECTRICAL SCHEMATICS III

LIGHT FIXTURE SCHEDULE

SYMBOL	LETTER ID	MANUFACTURER	CATALOG NUMBER	FINISH COLOR	VOLTS	LAMP	LUMENS (MIN)	CCT	MOUNTING HEIGHT	TYPE	DETAIL
	A	LITHONIA LIGHTING	DSX1-LED-P2-30K-80CRI-T5W-MVOLT-PER-SPD20KV-DF-HA-CCE-DBLXD WITH PHOTOCELL, CONTRACTOR SHALL INSTALL IN LINE WITH LIGHT SWITCH TO OVERRIDE.	BLACK	240	68W LED	9,940	3000K	15'-0"	AREA LIGHT	POLE MOUNTED, SEE DETAIL D SHEET SE4.1
	B	LITHONIA LIGHTING	2VTL2-48L-ADP-LP940-BDP	WHITE	120	38.3W LED	4,116	4000K	*	BUILDING CEILING TROFFER 2X2	*CEILING MOUNTED, COORDINATE SURFACE TYPE BY OTHERS.
	C	LITHONIA LIGHTING	WDGE2 LED-P4 30K-80CRI-TFTM-MVOLT-PE-CCE-PIR-DBLXD- (2 OVER DOOR SHALL HAVE BATTERY BACK UP E10WH), CONTRACTOR SHALL INSTALL IN LINE WITH LIGHT SWITCH TO OVERRIDE.	BLACK	120	47W LED	4,002	3000K	*	BUILDING WALLPACK LIGHT	*WALL MOUNTED, 1 FOOT ABOVE DOOR
	D	LITHONIA LIGHTING	FEX-L24-9000LM-FGFL-WD-MVOLT-30K-90CRI-SPD10KV-IP67-DNAXD CR	BLACK	120	62.5W LED	6,424	3000K	*	CANOPY LIGHT	*CEILING
	E	LITHONIA LIGHTING	AFF-OEL-DWHGXD-UVOLT-LTP-SDRT-FCT-	BLACK	120	2.5W LED	N/A	N/A	*	EMERGENCY EXIT LIGHT	*WALL MOUNTED ABOVE DOOR.
	F	WAC LIGHTING	WS-180137-30K-90-2130	MATCH WATER FAUCET FIXTURE FINISH	120	28W LED	2,130	3000K	*	BUILDING RESTROOM LIGHT	*WALL MOUNTED ABOVE MIRROR.
	G	HOLOPHANE	HPFS-P3-55PG-MVOLT-30K-YMS-20KV-CN P123FT-UBV-DBLXD	BLACK	240	83W LED	12,627	3000K	*	SBR CATWALK FLOODLIGHT, CLASS 1 DIVISION 2	*SEE DETAIL.

NOTE: CONTRACTOR SHALL VERIFY ARCHITECTURE ELEMENTS FOR MOUNTING AND INSTALLATION PRIOR TO ORDERING. CONTRACTOR MAY SUBMIT ALTERNATIVES FOR ENGINEER APPROVED EQUAL.

WRIGHT engineering corporation
ELECTRICAL ENGINEERING AND DESIGN
165 EAST CHILTON DRIVE
CHANDLER, ARIZONA 85225
PHONE: 480.497.5829
FAX: 480.497.5807
www.wrightengineering.us
Wright Project # 23319

CALL TWO WORKING DAYS BEFORE YOU DIG
602-263-1100
1-800-STAKE-IT
(OUTSIDE MARICOPA COUNTY)

NO	BY	DATE	REVISIONS	DATE	APP.

THESE DRAWINGS ARE THE PROPERTY OF P.A.C.E. AND SHALL NOT BE REPRODUCED IN ANY MANNER NOR BE USED FOR CONSTRUCTION UNLESS STAMPED "ISSUED FOR CONSTRUCTION".

Registered Professional Engineer (Electrical) Certificate No. 73954 JACOB BIELEFELDT 09-30-27 Expires 9-30-27

PREPARED BY: WRIGHT ENGINEERING
DESIGNED BY: JHB
DRAWN BY: XAG
CHECKED BY: JHB
SCALE: AS NOTED
DATE: NOV 2025
JOB NO. B614

TITLE: ELECTRICAL COVER SHEET

JOB: TOWN OF JEROME WASTEWATER TREATMENT PLANT YAVAPAI CO. AZ

ISSUED FOR BID

PREPARED BY:

PACE Advanced Water Engineering
8723 E. VIA DE COMMERCIO, #A-204 SCOTTSDALE, CA 85258
P: (480) 991-3595 | W: www.pacewater.com

SHEET E1.1
71 OF 99 SHEETS

JOB NO. B614

ELECTRICAL SYMBOLS

SINGLE LINE DIAGRAMS

- AMMETER
- VOLTMETER
- METER
- KILOWATT HOUR METER
- AMMETER SWITCH
- VOLTMETER SWITCH
- GROUND FAULT PROTECTION (GFP)
- POWER TRANSFORMER SEE NOTE 1.
- A-24 CIRCUIT BREAKER, 3 POLE UNLESS OTHERWISE INDICATED
- DISCONNECT SWITCH, 3 POLE UNLESS OTHERWISE INDICATED
- OIL FUSE CUTOUTS
- FUSE SEE NOTE 3.
- TRANSFER SWITCH, AUTOMATIC
- RV SIZE 1 — MAGNETIC MOTOR STARTER."1" INDICATES SIZE 1. RV INDICATES REDUCED VOLTAGE. 2S INDICATES 2 SPEED. R INDICATES REVERSING.
- MAGNETIC CONTACTOR
- (12) CONDUIT NUMBER 12. SEE CONDUIT AND WIRING SCHEDULE FOR SIZES AND QUANTITIES OF CONDUIT AND WIRES.
- GND — GROUND
- K — KIRK KEY INTERLOCKING OF EQUIPMENT
- 2 HP — EQUIPMENT FURNISHED, INSTALLED AND CONNECTED UNDER ANOTHER SECTION OF THE CONTRACT.
- PFR — PHASE FAILURE RELAY
- SA — SURGE ARRESTER
- EXISTING MOTOR (HP SHOWN)
- NEW MOTOR (ESTIMATED HP SHOWN)
- FUTURE MOTOR (ESTIMATED HP SHOWN)
- MANHOLE
- EYS SEAL

NOTES: (ELECTRICAL SYMBOLS)

1. POWER TRANSFORMERS SHALL BE DRY TYPE 480–208Y/120 VOLTS, 3 PHASE 4 WIRE UNLESS OTHERWISE INDICATED.
2. CONTROL TRANSFORMER SHALL BE DRY TYPE 480–120 VOLTS 1 PHASE UNLESS OTHERWISE INDICATED. SEE CONTROL WIRING DIAGRAMS FOR USE OF 120 VOLT CONTROL CIRCUITS CONTROL TRANSFORMERS SHALL BE SIZED TO HANDLE THE LOADS OF ALL RELAYS, PILOT LIGHTS, ETC. CONNECTED THERE TO PLUS 50 VA EXTRA CAPAOWNER.
3. LOCATED IN OR ON MOTOR CONTROL CENTER UNLESS OTHERWISE INDICATED.

CONTROL WIRING DIAGRAMS

NORMALLY OPEN — NORMALLY CLOSED — DEVICE

- CONTACT
- LIMIT SWITCH
- LIMIT SWITCH HELD CLOSED
- LIMIT SWITCH HELD OPEN
- PRESSURE OR VACUUM SWITCH
- LIQUID LEVEL SWITCH
- TEMPERATURE ACTUATED SWITCH
- FLOW SWITCH (AIR, WATER, ETC.)
- PUSH BUTTON SINGLE CIRCUIT MOMENTARY CONTACT. SEE NOTE 3.
- PUSH BUTTON SINGLE CIRCUIT LOCK-OUT(LOCATED AT MOTOR UNLESS OTHERWISE NOTED)
- TIMED CONTACT- CONTACT ACTION RELAY ON ENERGIZATION.
- TIMED CONTACT- CONTACT ACTION RELAY ON DE-ENERGIZATION.
- ON-OFF SWITCH. SEE NOTE 3.
- ESB — EMERGENCY STOP PUSH BUTTON (MAINTAINED CONTACT)
- STOP START — STOP -START PUSH-BUTTON STATION (MAINTAINED CONTACTS). SEE NOTE 3.
- H O A — HAND-OFF-AUTO SELECTOR SWITCH SEE NOTE 3. (THREE POSITION).
- TWO POSITION SELECTOR SWITCH SEE NOTE 3.
- PILOT LIGHT, Y=YELLOW, R=RED, A=AMBER, SEE NOTE 3. B=BLUE, W=WHITE, G=GREEN.
- BELL
- HORN OR SIREN
- CR — CONTROL RELAY SEE NOTE 3.
- M — STARTER COIL. SEE NOTE 3.
- TDR — TIME DELAY RELAY. (0-30 SECONDS UNLESS OTHERWISE NOTED). SEE NOTE 3.
- OL'S — MOTOR STARTER OVERLOAD RELAY CONTACTS
- CONTROL TRANSFORMER. SEE NOTES 2
- MANUAL MOTOR STARTER
- SOLENOID OPERATED CONTROL VALVE
- 120 VOLT, 1 PHASE, MOTOR (UNLESS OTHERWISE NOTED)
- RTM — RUNNING TIME METER. SEE NOTE 3. (ELAPSED TIME METER)
- SPACE HEATERS. (LOCATED AT MOTOR UNLESS OTHERWISE NOTED).
- TERMINALS IN MOTOR CONTROL CENTER/MCP; CONTACT OR DEVICE REMOTE FROM MOTOR CONTROL CENTER/MCP
- TERMINALS IN MOTOR CONTROL CENTER/MCP; CONTACT IN MOTOR CONTROL CENTER FOR CONNECTION TO REMOTE DEVICE/MCP
- DEVICE SIGNAL OUTPUT
- DEVICE SIGNAL INPUT

PLANS

- CONDUIT RUN CONCEALED UNDER SLAB OR BELOW GRADE. (CONCEALED IN SLAB WHERE SO NOTED OR WHERE ALLOWED PER SPECIFICATIONS).
- CONDUIT RUN EXPOSED UNLESS OTHERWISE NOTED
- EXISTING CONDUIT RUN
- HASH MARKS INDICATE QUANTITY OF #12 WIRES IN CONDUIT (PLUS 1#12 GROUND WIRE) EXCEPT NO HASH MARKS=3/4", 2#12 (PLUS 1#12 GROUND WIRE) UNLESS OTHERWISE NOTED. 3/4", 3#12; 1", 6#12; 3/4", 4#12; 1", 7#12; 3/4", 5#12; 1", 8#12
- L(1,3) — HOMERUN TO PANEL L, CIRCUITS 1 AND 3
- GROUND WIRE
- CONDUIT UP (OUT TOP OF EQUIPMENT)
- CONDUIT DOWN (OUT BOTTOM OF EQUIPMENT)
- CONDUIT STUBBED OUT AND CAPPED
- LIGHTING FIXTURE MOUNTED ON POLE OR POST OR ABOVE PLATFORM
- CEILING MOUNTED LIGHTING FIXTURE
- BRACKET MOUNTED LIGHTING FIXTURE
- FLOODLIGHT
- FLUORESCENT LIGHTING FIXTURE
- POLE MOUNTED LIGHT FIXTURE
- EXIT LIGHT
- RECESSED LIGHTING FIXTURE
- LIGHTING FIXTURES CONNECTED TO EMERGENCY CIRCUITS
- A 1/100 — LIGHTING FIXTURE TYPE A, 100 WATTS, WITH 1 LAMP. SEE LIGHTING FIXTURE SCHEDULE
- \$ SINGLE POLE, SINGLE THROW TOGGLE SWITCH
- \$2 DOUBLE POLE, SINGLE THROW TOGGLE SWITCH
- \$3 THREE-WAY TOGGLE SWITCH
- \$4 FOUR-WAY TOGGLE SWITCH
- \$M MANUAL MOTOR STARTER
- (switches above: AT +48" OR AS NOTED)
- \$a OUTLETS SHOWN WITH SUBSCRIPT "a" ADJACENT TO THEM SHALL BE CONTROLLED BY S a
- DUPLEX CONVENIENCE RECEPTACLE AT +12" OR AS NOTED
- SINGLE CONVENIENCE RECEPTACLE AT +12" OR AS NOTED
- SPECIAL PURPOSE RECEPTACLE AT +12" OR AS NOTED, RATING AS INDICATED
- JUNCTION BOX, SIZE AS REQUIRED BY CODE
- THERMOSTAT OUTLET AT +54"
- CLOCK OUTLET AT +7'-6" OR AS NOTED
- TELEPHONE OUTLET AT +12" OR AS NOTED
- TELEPHONE FLOOR OUTLET
- HORN
- P — CONTROL DEVICE: P = PRESSURE SWITCH; ZS = LIMIT SWITCH; L = LEVEL SWITCH; V = CONTROL VALVE
- CONTROL STATION: PUSH-BUTTON STATION OR SELECTOR SWITCH. SEE CONTROL WIRING DIAGRAMS FOR REQUIREMENTS.
- EXISTING MOTOR
- NEW MOTOR
- FUTURE MOTOR
- GROUND WELL
- GROUND ROD
- DISCONNECT SWITCH. SEE SINGLE LINE DIAGRAM FOR SIZE.
- LIGHTING PANEL. SURFACE MOUNTED.
- SWITCHBOARD, DISTRIBUTION PANEL OR MOTOR CONTROL CENTER
- (12) CONDUIT NUMBER 12. SEE CONDUIT AND WIRING SCHEDULE FOR SIZES AND QUANTITIES OF CONDUIT AND WIRES.
- +12" INDICATES HEIGHT FROM FINISHED FLOOR OR GRADE TO CENTERLINE OF DEVICE.
- (1) INDICATES TO REFER TO NOTE (1) ON DRAWING
- W.P. WEATHERPROOF. PROVIDE GASKETS AS REQUIRED
- C.O. CONDUIT ONLY
- FE-184 INSTRUMENTATION DEVICE. SEE PROCESS AND INSTRUMENTATION DRAWINGS FOR DESCRIPTIONS.
- PULL BOX (SIZE AS REQUIRED)
- OUTPUT TERMINAL
- INPUT TERMINAL

CONSTRUCTION NOTES

(1) REMOVE ALL EXISTING CUSTOMER OWNED OVERHEAD ELECTRICAL AND POWER POLE AND DISPOSE OF PROPERLY. COORDINATE WITH OWNER FOR SCHEDULING.

(2) REMOVE EXISTING SES AND PANEL AND DISPOSE OF PROPERLY. COORDINATE DISCONNECTION OF THE METER AND SECONDARY CONDUCTORS WITH APS

(3) DE-ENERGIZE EXISTING LAB BUILDING UPON COMPLETION OF CONSTRUCTION OF THE NEW LAB. REMOVE ALL EXISTING CONDUCTORS AND ELECTRICAL EQUIPMENT AND DISPOSE OF PROPERLY. COORDINATE ALL WORK WITH OWNER AND POWER COMPANY PRIOR TO DE-ENERGIZATION.

(4) COORDINATE WITH APS TO REPLACE THE EXISTING POLE MOUNTED SINGLE PHASE TRANSFORMER. APS TO INSTALL THREE PHASE TRANSFORMERS. CONTRACTOR SHALL VERIFY LOCATION OF NEW TRANSFORMER WITH APS. APS PLANS WILL DETERMINE EXACT LOCATION AND TAKE PRECEDENCE OVER THESE DRAWINGS. COORDINATE ALL WORK WITH APS.

(5) APS SERVICE LINE. TRENCH AND INSTALL CONDUIT PER APS SPECIFICATIONS. POWER COMPANY PLANS WILL DETERMINE EXACT LOCATION OF CONDUIT AND TAKE PRECEDENCE OVER THESE DRAWINGS.

(6) SES, 400 AMP, 277/480V, 3Ø, 4W, SEE DETAIL 1 ON E4.1.

(7) MINI-POWER ZONE AND PANELBOARD. SEE DETAIL 1 ON E4.1.

(8) ATS 400A 277/480V, 3Ø, 4W, SEE DETAIL 2 ON SHEET E4.1.

(9) GENERATOR 125KW, 277/480V, 3Ø, 4W, SEE DETAIL 1 ON E4.3.

(10) TRANSFORMER 50KVA 480V – 120/240V 1Ø, SEE DETAIL 2 ON SHEET E4.1.

(11) PANELBOARD, 120/240V, 1Ø, 3W, SEE DETAIL 2 ON E4.1.

(12) DISTRIBUTION PANEL DSP-1 400A 277/480V, 3Ø, 4W, SEE DETAIL 2 ON SHEET E4.1.

(13) ELECTRICAL CONTRACTOR SHALL INSTALL POWER FEED TO MINI SPLIT AIR CONDITIONER AND HEAT PUMP & MAKE ALL 240V CONNECTIONS.

(14) TANKLESS WATER HEATER & DISCONENCT. ELECTRICAL CONTRACTOR SHALL MAKE ALL POWER AND CONTROL CONNECTIONS PER THESE PLANS AND SPECIFICATIONS AND THE MANUFACTURERS REQUIREMENTS.

(15) GROUNDING ELECTRODE CONDUCTORS, GROUND ROD, AND INSPECTION WELL FOR ONLY THE FIRST GROUND ROD, PER SINGLE LINE DIAGRAMS AND DETAILS ON SHEET E4.6.

(16) LIGHTNING PROTECTION SYSTEM, PER NFPA AND DETAIL 6 ON SHEET E4.6

(17) CLASSIFIED SEAL OFF LISTED FOR CLASS 1 DIV 1. LOCATE WITHIN 10 FEET OF CLASSIFIED AREA BOUNDARY. PVC COATED RMS EYS TYPE OR EQUIVALENT. SEAL SHALL HAVE SEALING COMPOUND CHICO, OR EQUAL.

(20) 20A HEADWORKS CONTROL PANEL, BY VENDOR CLASS 1 DIVISION 2 LISTED. ELECTRICAL CONTRACTOR SHALL MAKE ALL POWER AND CONTROL CONNECTIONS PER THESE PLANS AND SPECIFICATIONS AND THE MANUFACTURERS REQUIREMENTS. SEE DETAIL 1 ON SHEET E4.4.

(21) INFLUENT COARSE SCREEN MOTOR. ELECTRICAL CONTRACTOR SHALL MAKE ALL POWER AND CONTROL CONNECTIONS PER THESE PLANS AND SPECIFICATIONS AND THE MANUFACTURERS REQUIREMENTS.

(22) INFLUENT CONVEYOR MOTOR. ELECTRICAL CONTRACTOR SHALL MAKE ALL POWER AND CONTROL CONNECTIONS PER THESE PLANS AND SPECIFICATIONS AND THE MANUFACTURERS REQUIREMENTS.

(23) POTABLE SOLENOID VALVE AT HEADWORKS. ELECTRICAL CONTRACTOR SHALL MAKE ALL POWER AND CONTROL CONNECTIONS PER THESE PLANS AND SPECIFICATIONS AND THE MANUFACTURERS REQUIREMENTS.

(24) ULTRASONIC LEVEL TRANSDUCER. ELECTRICAL CONTRACTOR SHALL MAKE ALL POWER AND CONTROL CONNECTIONS PER THESE PLANS AND SPECIFICATIONS AND THE MANUFACTURERS REQUIREMENTS.

(30) SBR PANEL BY VENDOR, ELECTRICAL CONTRACTOR SHALL MAKE ALL POWER AND CONTROL CONNECTIONS PER THESE PLANS AND SPECIFICATIONS AND THE MANUFACTURERS REQUIREMENTS.

(31) SBR INFLUENT VALVE. ELECTRICAL CONTRACTOR SHALL MAKE ALL POWER AND CONTROL CONNECTIONS PER THESE PLANS AND SPECIFICATIONS AND THE MANUFACTURERS REQUIREMENTS.

(32) SBR SUBMERSIBLE MIXER. ELECTRICAL CONTRACTOR SHALL MAKE ALL POWER AND CONTROL CONNECTIONS PER THESE PLANS AND SPECIFICATIONS AND THE MANUFACTURERS REQUIREMENTS.

(33) WAS TRANSFER PUMP. ELECTRICAL CONTRACTOR SHALL MAKE ALL POWER AND CONTROL CONNECTIONS PER THESE PLANS AND SPECIFICATIONS AND THE MANUFACTURERS REQUIREMENTS.

(34) DECANT MOTOR. ELECTRICAL CONTRACTOR SHALL MAKE ALL POWER AND CONTROL CONNECTIONS PER THESE PLANS AND SPECIFICATIONS AND THE MANUFACTURERS REQUIREMENTS.

(35) SBR DECANT VALVE. ELECTRICAL CONTRACTOR SHALL MAKE ALL POWER AND CONTROL CONNECTIONS PER THESE PLANS AND SPECIFICATIONS AND THE MANUFACTURERS REQUIREMENTS.

(36) DO TRANSMITTER AND ANALYZER. ELECTRICAL CONTRACTOR SHALL MAKE ALL POWER AND CONTROL CONNECTIONS PER THESE PLANS AND SPECIFICATIONS AND THE MANUFACTURERS REQUIREMENTS.

(37) SUBMERSIBLE PRESSURE TRANSDUCER. ELECTRICAL CONTRACTOR SHALL MAKE ALL POWER AND CONTROL CONNECTIONS PER THESE PLANS AND SPECIFICATIONS AND THE MANUFACTURERS REQUIREMENTS.

(38) LEVEL FLOAT. ELECTRICAL CONTRACTOR SHALL MAKE ALL POWER AND CONTROL CONNECTIONS PER THESE PLANS AND SPECIFICATIONS AND THE MANUFACTURERS REQUIREMENTS.

(39) SBR MOTOR CONTROL PANEL, PROVIDE AND INSTALL. ELECTRICAL CONTRACTOR SHALL MAKE ALL POWER AND CONTROL CONNECTIONS PER THESE PLANS AND SPECIFICATIONS AND THE MANUFACTURERS REQUIREMENTS.

(40) SBR EFFLUENT VALVE. ELECTRICAL CONTRACTOR SHALL MAKE ALL POWER AND CONTROL CONNECTIONS PER THESE PLANS AND SPECIFICATIONS AND THE MANUFACTURERS REQUIREMENTS.

(41) FLOW METER. ELECTRICAL CONTRACTOR SHALL MAKE ALL POWER AND CONTROL CONNECTIONS PER THESE PLANS AND SPECIFICATIONS AND THE MANUFACTURERS REQUIREMENTS.

(42) SBR AIR VALVE. ELECTRICAL CONTRACTOR SHALL MAKE ALL POWER AND CONTROL CONNECTIONS PER THESE PLANS AND SPECIFICATIONS AND THE MANUFACTURERS REQUIREMENTS.

(50) VARIABLE FREQUENCY DRIVE. ELECTRICAL CONTRACTOR SHALL MAKE ALL POWER AND CONTROL CONNECTIONS PER THESE PLANS AND SPECIFICATIONS AND THE MANUFACTURERS REQUIREMENTS.

(51) SBR AERATION BLOWER WITH INTEGRAL DISCONNECT. ELECTRICAL CONTRACTOR SHALL MAKE ALL POWER AND CONTROL CONNECTIONS PER THESE PLANS AND SPECIFICATIONS AND THE MANUFACTURERS REQUIREMENTS.

(52) DIGESTER AERATION BLOWER WITH INTEGRAL DISCONNECT. ELECTRICAL CONTRACTOR SHALL MAKE ALL POWER AND CONTROL CONNECTIONS PER THESE PLANS AND SPECIFICATIONS AND THE MANUFACTURERS REQUIREMENTS.

(53) PRESSURE TRANSDUCER. ELECTRICAL CONTRACTOR SHALL MAKE ALL POWER AND CONTROL CONNECTIONS PER THESE PLANS AND SPECIFICATIONS AND THE MANUFACTURERS REQUIREMENTS.

(54) TEMPERATURE TRANSDUCER. ELECTRICAL CONTRACTOR SHALL MAKE ALL POWER AND CONTROL CONNECTIONS PER THESE PLANS AND SPECIFICATIONS AND THE MANUFACTURERS REQUIREMENTS.

(60) 20A SLUDGE BAGGING SYSTEM CONTROL PANEL, BY VENDOR. ELECTRICAL CONTRACTOR SHALL MAKE ALL POWER AND CONTROL CONNECTIONS PER THESE PLANS AND SPECIFICATIONS AND THE MANUFACTURERS REQUIREMENTS.

(61) POTABLE WATER VALVE. ELECTRICAL CONTRACTOR SHALL MAKE ALL POWER AND CONTROL CONNECTIONS PER THESE PLANS AND SPECIFICATIONS AND THE MANUFACTURERS REQUIREMENTS.

(62) POLYMER METERING PUMP. ELECTRICAL CONTRACTOR SHALL MAKE ALL POWER AND CONTROL CONNECTIONS PER THESE PLANS AND SPECIFICATIONS AND THE MANUFACTURERS REQUIREMENTS.

(63) DRY POLYMER MIXER. ELECTRICAL CONTRACTOR SHALL MAKE ALL POWER AND CONTROL CONNECTIONS PER THESE PLANS AND SPECIFICATIONS AND THE MANUFACTURERS REQUIREMENTS.

(64) DEWATERING FEED PUMP. ELECTRICAL CONTRACTOR SHALL MAKE ALL POWER AND CONTROL CONNECTIONS PER THESE PLANS AND SPECIFICATIONS AND THE MANUFACTURERS REQUIREMENTS.

(70) 30A DRYING BED LIFT PUMP CONTROL PANEL, 480V, 3Ø, 4W. ELECTRICAL CONTRACTOR SHALL MAKE ALL POWER AND CONTROL CONNECTIONS PER THESE PLANS AND SPECIFICATIONS AND THE MANUFACTURERS REQUIREMENTS. SEE DETAIL 1 ON SHEET E4.4.

(71) DRYING BED LIFT PUMP. ELECTRICAL CONTRACTOR SHALL MAKE ALL POWER AND CONTROL CONNECTIONS PER THESE PLANS AND SPECIFICATIONS AND THE MANUFACTURERS REQUIREMENTS. SEE DETAIL 4 ON SHEET E4.5.

(72) LEVEL FLOAT. ELECTRICAL CONTRACTOR SHALL MAKE ALL POWER AND CONTROL CONNECTIONS PER THESE PLANS AND SPECIFICATIONS AND THE MANUFACTURERS REQUIREMENTS. SEE DETAIL 4 ON SHEET E4.5.

(80) OVERFLOW LIFT PUMP CONTROL PANEL, BY VENDOR. 240V, 1Ø, 3W. ELECTRICAL CONTRACTOR SHALL MAKE ALL POWER AND CONTROL CONNECTIONS PER THESE PLANS AND SPECIFICATIONS AND THE MANUFACTURERS REQUIREMENTS. SEE DETAIL 1 ON SHEET E4.4.

(81) OVERFLOW LIFT PUMP. ELECTRICAL CONTRACTOR SHALL MAKE ALL POWER AND CONTROL CONNECTIONS PER THESE PLANS AND SPECIFICATIONS AND THE MANUFACTURERS REQUIREMENTS. SEE DETAIL 4 ON SHEET E4.5.

(82) LEVEL FLOAT. ELECTRICAL CONTRACTOR SHALL MAKE ALL POWER AND CONTROL CONNECTIONS PER THESE PLANS AND SPECIFICATIONS AND THE MANUFACTURERS REQUIREMENTS. SEE DETAIL 4 ON SHEET E4.5.

(90) JOINT TRENCH WITH WATER LINES. MAINTAIN 24-INCH SEPARATION. SEE DETAIL 3 ON SHEET E4.3.

(91) STACKED #7 CONCRETE PULL BOX. INSTALL AS SHOWN OR AS NEEDED IF CONDUIT RUNS WILL EXCEED 360 DEGREE OF BENDS OR THE LENGTH EXCEEDS 400 FEET. INSTALL 1 FOR POWER AND 1 FOR CONTROL. SEE DETAIL 5 ON SHEET E4.3.

(92) STANCHION MOUNTED NEMA 4X SST JUNCTION BOXES. MAINTAIN 3' CLEARANCE IN FRONT OF EQUIPMENT. EXTRA SLACK SHALL REMAIN IN THE J-BOX FOR FUTURE LEVEL ADJUSTMENT. SEE DETAIL 2 ON SHEET E4.2 AND DETAIL 1 ON SHEET E4.4.

(93) TRAFFIC BOLLARD TO BE INSTALLED PER CIVIL PLANS. LOCATE OUT OF 4 FOOT WORKING SPACE ENVELOPE PER NEC.

(94) NON-FUSED DISCONNECT, NEMA 4X FOR OUTDOOR AND CLASS 1 DIV 1 WITHIN CLASSIFIED BOUNDARY. IF LOCATION IS ABOVE BOUNDARY, NEMA 4X WITH CLASSIFIED SEAL OFFS IS ACCEPTABLE. PROVIDE PERMANENT LABEL SUITABLE FOR CORROSIVE ENVIRONMENTS AND UV RESISTANT. MATCH LABEL NAMING CONVENTION WITH P&ID. SEE DETAIL 5 ON SHEET E4.2 & SEE DETAIL 1 ON SHEET E4.4.

(95) ROTARY TYPE DISCONNECT, NEMA 4X FOR OUTDOOR AND CLASS 1 DIV 1 WITHIN CLASSIFIED BOUNDARY. IF LOCATION IS ABOVE BOUNDARY, NEMA 4X WITH CLASSIFIED SEAL OFFS IS ACCEPTABLE. PROVIDE PERMANENT LABEL SUITABLE FOR CORROSIVE ENVIRONMENTS AND UV RESISTANT. MATCH LABEL NAMING CONVENTION WITH P&ID. SEE DETAIL 5 ON SHEET E4.2 & SEE DETAIL 1 ON SHEET E4.4.

(96) E-STOP, NEMA 4X FOR OUTDOOR AND CLASS 1 DIV 1 WITHIN CLASSIFIED BOUNDARY. IF LOCATION IS ABOVE BOUNDARY, NEMA 4X WITH CLASSIFIED SEAL OFFS IS ACCEPTABLE. PROVIDE PERMANENT LABEL SUITABLE FOR CORROSIVE ENVIRONMENTS AND UV RESISTANT. MATCH LABEL NAMING CONVENTION WITH P&ID. SEE DETAIL 5 ON SHEET E4.2.

(97) 20A 120V GFCI DUPLEX RECEPTACLE WITH METAL WEATHERPROOF WHILE-IN-USE AND LOCKABLE COVER INSTALLED PER DETAIL 1 ON SHEET E4.2.

(98) 20A 120V GFCI DUPLEX RECEPTACLE WITH METAL WEATHERPROOF WHILE-IN-USE AND LOCKABLE COVER INSTALLED ONTO LIGHT POLE. SEE DETAIL 2 ON SHEET E4.5.

(99) CLASSIFIED AREA VERIFY BOUNDARY WITH THE NFPA. INSTALL ANY PANELS, DISCONNECTS, SPLICES, ARC MAKING EQUIPMENT OUT OF THE BOUNDARY, WHERE NOT POSSIBLE THEN INSTALL CLASS 1 DIV 1 LISTED EQUIPMENT. ALL CONDUIT WITHIN BOUNDARY SHALL BE CLASS 1 DIV 1 OR 2 RATED AS REQUIRED BY THE BOUNDARY. USE PVC COATED THREADED RMC CONDUIT, INSTALL STAINLESS STEEL 316 ENCLOSURES, HARDWARE AND EQUIPMENT WITHIN 10 FEET OF THE BOUNDARY. INSTALL CLASSIFIED SEAL OFFS WITHIN 10 FEET OF THE BOUNDARY, AT A PANEL OR JUNCTION BOX IS PREFERRED.

ISSUED FOR BID

WRIGHT engineering corporation
ELECTRICAL ENGINEERING AND DESIGN
165 EAST CHILTON DRIVE
CHANDLER, ARIZONA 85225
PHONE: 480.497.5829
FAX: 480.497.5807
www.wrightengineering.us
Wright Project # 23319

CALL TWO WORKING DAYS BEFORE YOU DIG
602-263-1100
1-800-STAKE-IT
(OUTSIDE MARICOPA COUNTY)

NO	BY	DATE	REVISIONS	DATE	APP.

Registered Professional Engineer (Electrical) Certificate No. 73954 JACOB BIELEFELDT Date Signed 11-24-2025 Expires 9-30-27

PREPARED BY: WRIGHT ENGINEERING
DESIGNED BY: JHB
DRAWN BY: XAG
CHECKED BY: JHB
SCALE: AS NOTED
DATE NOV 2025
JOB NO. B614

TITLE: ELECTRICAL NOTES + LEGEND

JOB: TOWN OF JEROME WASTEWATER TREATMENT PLANT
YAVAPAI CO. AZ

PREPARED BY: PACE Advanced Water Engineering
8723 E. VIA de COMMERCIO, SUITE A-204 | SCOTTSDALE, CA 85258
P: (408) 991-3595 | www.pacewater.com

SHEET E1.2
72 OF 99 SHEETS
JOB NO. B614

THESE DRAWINGS ARE THE PROPERTY OF P.A.C.E. AND SHALL NOT BE REPRODUCED IN ANY MANNER NOR BE USED FOR CONSTRUCTION UNLESS STAMPED "ISSUED FOR CONSTRUCTION".

H:\2023\23319-Jerome WWTP\23319-E.dwg - Tab: E1.2 - by jacobb on 11/24/25 at 6:56:46 PM

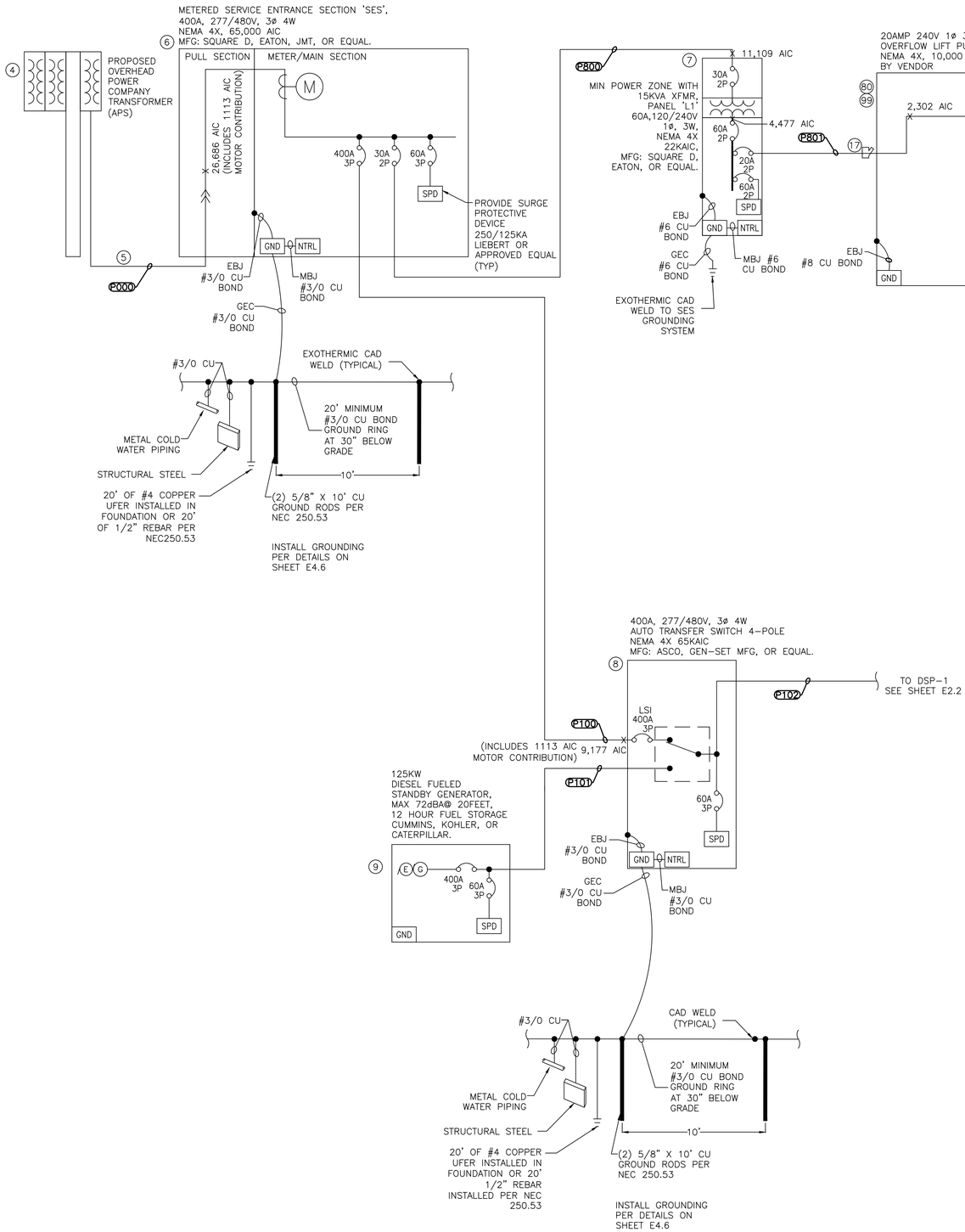

CONSTRUCTION NOTES

(4) COORDINATE WITH APS TO REPLACE THE EXISTING POLE MOUNTED SINGLE PHASE TRANSFORMER. APS TO INSTALL THREE PHASE TRANSFORMERS. CONTRACTOR SHALL VERIFY LOCATION OF NEW TRANSFORMER WITH APS. APS PLANS WILL DETERMINE EXACT LOCATION AND TAKE PRECEDENCE OVER THESE DRAWINGS. COORDINATE ALL WORK WITH APS.

(5) APS SERVICE LINE. TRENCH AND INSTALL CONDUIT PER APS SPECIFICATIONS. POWER COMPANY PLANS WILL DETERMINE EXACT LOCATION OF CONDUIT AND TAKE PRECEDENCE OVER THESE DRAWINGS.

(6) SES, 400 AMP, 277/480V, 3ø, 4W, SEE DETAIL 1 ON E4.1.

(7) MINI-POWER ZONE AND PANELBOARD. SEE DETAIL 1 ON E4.1.

(8) ATS 400A 277/480V, 3ø, 4W, SEE DETAIL 2 ON SHEET E4.1.

(9) GENERATOR 125KW, 277/480V, 3ø, 4W, SEE DETAIL 1 ON E4.3.

(17) CLASSIFIED SEAL OFF LISTED FOR CLASS 1 DIV 1. LOCATE WITHIN 10 FEET OF CLASSIFIED AREA BOUNDARY. PVC COATED RMS EYS TYPE OR EQUIVALENT. SEAL SHALL HAVE SEALING COMPOUND CHICO, OR EQUAL.

(80) OVERFLOW LIFT PUMP CONTROL PANEL, BY VENDOR. 240V, 1ø, 3W. ELECTRICAL CONTRACTOR SHALL MAKE ALL POWER AND CONTROL CONNECTIONS PER THESE PLANS AND SPECIFICATIONS AND THE MANUFACTURERS REQUIREMENTS. SEE DETAIL 1 ON SHEET E4.4.

(81) OVERFLOW LIFT PUMP. ELECTRICAL CONTRACTOR SHALL MAKE ALL POWER AND CONTROL CONNECTIONS PER THESE PLANS AND SPECIFICATIONS AND THE MANUFACTURERS REQUIREMENTS. SEE DETAIL 4 ON SHEET E4.5.

(99) CLASSIFIED AREA VERIFY BOUNDARY WITH THE NFPA. INSTALL ANY PANELS, DISCONNECTS, SPLICES, ARC MAKING EQUIPMENT OUT OF THE BOUNDARY, WHERE NOT POSSIBLE THEN INSTALL CLASS 1 DIV 1 LISTED EQUIPMENT. ALL CONDUIT WITHIN BOUNDARY SHALL BE CLASS 1 DIV 1 OR 2 RATED AS REQUIRED BY THE BOUNDARY. USE PVC COATED THREADED RMC CONDUIT. INSTALL STAINLESS STEEL 316 ENCLOSURES, HARDWARE AND EQUIPMENT WITHIN 10 FEET OF THE BOUNDARY. INSTALL CLASSIFIED SEAL OFFS WITHIN 10 FEET OF THE BOUNDARY, AT A PANEL OR JUNCTION BOX IS PREFERRED.

NO	BY	DATE	REVISIONS	DATE	APP.

Registered Professional Engineer (Electrical) Certificate No. 73954 JASON BELLEDIN Date Signed 9-30-25 Expires 9-30-27

PREPARED BY: WRIGHT ENGINEERING
DESIGNED BY: JHB
DRAWN BY: XAG
CHECKED BY: JHB
SCALE: AS NOTED
DATE: NOV 2025
JOB NO.: B614

THESE DRAWINGS ARE THE PROPERTY OF P.A.C.E. AND SHALL NOT BE REPRODUCED IN ANY MANNER NOR BE USED FOR CONSTRUCTION UNLESS STAMPED "ISSUED FOR CONSTRUCTION".

TITLE: ELECTRICAL SINGLE LINE DIAGRAM I

JOB: TOWN OF JEROME WASTEWATER TREATMENT PLANT YAVAPAI CO. AZ

PREPARED BY: PACE Advanced Water Engineering 8723 E. Via de Commercio, Suite 2-A | Scottsdale, CA 85258 p. (408) 991-3595 | www.pacewater.com

ISSUED FOR BID

SHEET E2.1
73 OF 99 SHEETS

JOB NO. B614

1A SINGLE LINE DIAGRAM
NO SCALE

277/480V 3ø 4W

WRIGHT engineering corporation
ELECTRICAL ENGINEERING AND DESIGN
165 EAST CHILTON DRIVE
CHANDLER, ARIZONA 85225
PHONE: 480.497.5829
FAX: 480.497.5807
www.wrightengineering.us
Wright Project # 23319

CALL TWO WORKING DAYS BEFORE YOU DIG
602-263-1100
1-800-STAKE-IT
(OUTSIDE MARICOPA COUNTY)

H:\2025\2513-Jerome WW TP\2513-E-Dwg - Feb 03 - 1\y-pace.ac 11/04/25 at 8:56:48 PM

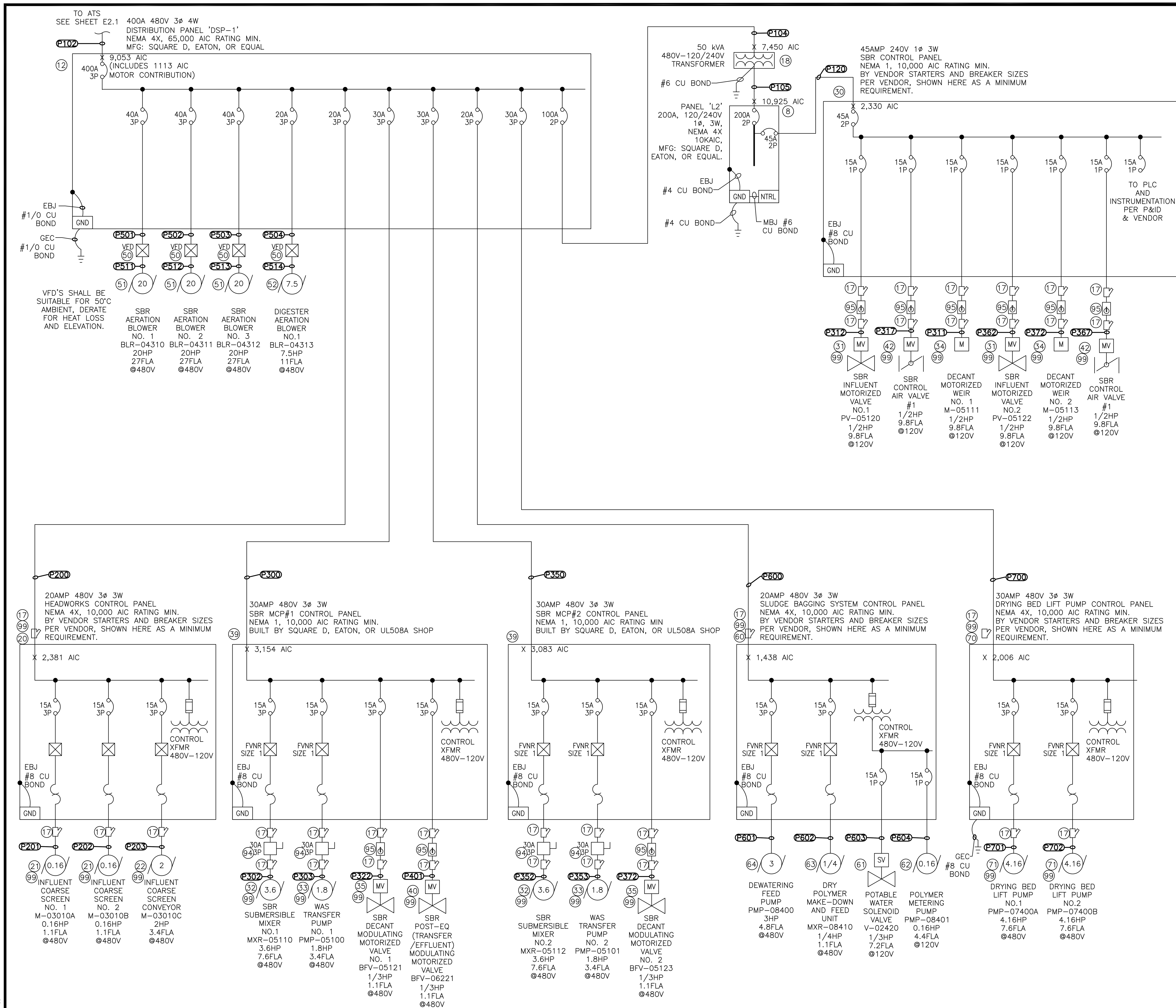

1B SINGLE LINE DIAGRAM

NO SCALE

277/480V 3ø 4W

CONSTRUCTION NOTES

(12) DISTRIBUTION PANEL DSP-1 400A 277/480V, 3ø, 4W, SEE DETAIL 2 ON SHEET E4.1.

(17) CLASSIFIED SEAL OFF LISTED FOR CLASS 1 DIV 1. LOCATE WITHIN 10 FEET OF CLASSIFIED AREA BOUNDARY. PVC COATED RMS EYS TYPE OR EQUIVALENT. SEAL SHALL HAVE SEALING COMPOUND CHICO, OR EQUAL.

(20) 20A HEADWORKS CONTROL PANEL, BY VENDOR CLASS 1 DIVISION 2 LISTED. ELECTRICAL CONTRACTOR SHALL MAKE ALL POWER AND CONTROL CONNECTIONS PER THESE PLANS AND SPECIFICATIONS AND THE MANUFACTURERS REQUIREMENTS. SEE DETAIL 1 ON SHEET E4.4.

(21) INFLUENT COARSE SCREEN MOTOR. ELECTRICAL CONTRACTOR SHALL MAKE ALL POWER AND CONTROL CONNECTIONS PER THESE PLANS AND SPECIFICATIONS AND THE MANUFACTURERS REQUIREMENTS.

(22) INFLUENT CONVEYOR MOTOR. ELECTRICAL CONTRACTOR SHALL MAKE ALL POWER AND CONTROL CONNECTIONS PER THESE PLANS AND SPECIFICATIONS AND THE MANUFACTURERS REQUIREMENTS.

(30) SBR PANEL BY VENDOR, ELECTRICAL CONTRACTOR SHALL MAKE ALL POWER AND CONTROL CONNECTIONS PER THESE PLANS AND SPECIFICATIONS AND THE MANUFACTURERS REQUIREMENTS.

(31) SBR INFLUENT VALVE. ELECTRICAL CONTRACTOR SHALL MAKE ALL POWER AND CONTROL CONNECTIONS PER THESE PLANS AND SPECIFICATIONS AND THE MANUFACTURERS REQUIREMENTS.

(32) SBR SUBMERSIBLE MIXER. ELECTRICAL CONTRACTOR SHALL MAKE ALL POWER AND CONTROL CONNECTIONS PER THESE PLANS AND SPECIFICATIONS AND THE MANUFACTURERS REQUIREMENTS.

(33) WAS TRANSFER PUMP. ELECTRICAL CONTRACTOR SHALL MAKE ALL POWER AND CONTROL CONNECTIONS PER THESE PLANS AND SPECIFICATIONS AND THE MANUFACTURERS REQUIREMENTS.

(34) DECANT MOTOR. ELECTRICAL CONTRACTOR SHALL MAKE ALL POWER AND CONTROL CONNECTIONS PER THESE PLANS AND SPECIFICATIONS AND THE MANUFACTURERS REQUIREMENTS.

(35) SBR DECANT VALVE. ELECTRICAL CONTRACTOR SHALL MAKE ALL POWER AND CONTROL CONNECTIONS PER THESE PLANS AND SPECIFICATIONS AND THE MANUFACTURERS REQUIREMENTS.

(39) SBR MOTOR CONTROL PANEL, PROVIDE AND INSTALL. ELECTRICAL CONTRACTOR SHALL MAKE ALL POWER AND CONTROL CONNECTIONS PER THESE PLANS AND SPECIFICATIONS AND THE MANUFACTURERS REQUIREMENTS.

(40) SBR EFFLUENT VALVE. ELECTRICAL CONTRACTOR SHALL MAKE ALL POWER AND CONTROL CONNECTIONS PER THESE PLANS AND SPECIFICATIONS AND THE MANUFACTURERS REQUIREMENTS.

(42) SBR AIR VALVE. ELECTRICAL CONTRACTOR SHALL MAKE ALL POWER AND CONTROL CONNECTIONS PER THESE PLANS AND SPECIFICATIONS AND THE MANUFACTURERS REQUIREMENTS.

(50) VARIABLE FREQUENCY DRIVE. ELECTRICAL CONTRACTOR SHALL MAKE ALL POWER AND CONTROL CONNECTIONS PER THESE PLANS AND SPECIFICATIONS AND THE MANUFACTURERS REQUIREMENTS.

(51) SBR AERATION BLOWER WITH INTEGRAL DISCONNECT. ELECTRICAL CONTRACTOR SHALL MAKE ALL POWER AND CONTROL CONNECTIONS PER THESE PLANS AND SPECIFICATIONS AND THE MANUFACTURERS REQUIREMENTS.

(52) DIGESTER AERATION BLOWER WITH INTEGRAL DISCONNECT. ELECTRICAL CONTRACTOR SHALL MAKE ALL POWER AND CONTROL CONNECTIONS PER THESE PLANS AND SPECIFICATIONS AND THE MANUFACTURERS REQUIREMENTS.

(60) 20A SLUDGE BAGGING SYSTEM CONTROL PANEL, BY VENDOR. ELECTRICAL CONTRACTOR SHALL MAKE ALL POWER AND CONTROL CONNECTIONS PER THESE PLANS AND SPECIFICATIONS AND THE MANUFACTURERS REQUIREMENTS.

(61) POTABLE WATER VALVE. ELECTRICAL CONTRACTOR SHALL MAKE ALL POWER AND CONTROL CONNECTIONS PER THESE PLANS AND SPECIFICATIONS AND THE MANUFACTURERS REQUIREMENTS.

(62) POLYMER METERING PUMP. ELECTRICAL CONTRACTOR SHALL MAKE ALL POWER AND CONTROL CONNECTIONS PER THESE PLANS AND SPECIFICATIONS AND THE MANUFACTURERS REQUIREMENTS.

(63) DRY POLYMER MIXER. ELECTRICAL CONTRACTOR SHALL MAKE ALL POWER AND CONTROL CONNECTIONS PER THESE PLANS AND SPECIFICATIONS AND THE MANUFACTURERS REQUIREMENTS.

(64) DEWATERING FEED PUMP. ELECTRICAL CONTRACTOR SHALL MAKE ALL POWER AND CONTROL CONNECTIONS PER THESE PLANS AND SPECIFICATIONS AND THE MANUFACTURERS REQUIREMENTS.

(70) 30A DRYING BED LIFT PUMP CONTROL PANEL, 480V, 3ø, 4W. ELECTRICAL CONTRACTOR SHALL MAKE ALL POWER AND CONTROL CONNECTIONS PER THESE PLANS AND SPECIFICATIONS AND THE MANUFACTURERS REQUIREMENTS. SEE DETAIL 1 ON SHEET E4.4.

(71) DRYING BED LIFT PUMP. ELECTRICAL CONTRACTOR SHALL MAKE ALL POWER AND CONTROL CONNECTIONS PER THESE PLANS AND SPECIFICATIONS AND THE MANUFACTURERS REQUIREMENTS. SEE DETAIL 4 ON SHEET E4.5.

(94) NON-FUSED DISCONNECT, NEMA 4X FOR OUTDOOR AND CLASS 1 DIV 1 WITHIN CLASSIFIED BOUNDARY. IF LOCATION IS ABOVE BOUNDARY, NEMA 4X WITH CLASSIFIED SEAL OFFS IS ACCEPTABLE. PROVIDE PERMANENT LABEL SUITABLE FOR CORROSIVE ENVIRONMENTS AND UV RESISTANT. MATCH LABEL NAMING CONVENTION WITH P&ID. SEE DETAIL 5 ON SHEET E4.2 & SEE DETAIL 1 ON SHEET E4.4.

(95) ROTARY TYPE DISCONNECT, NEMA 4X FOR OUTDOOR AND CLASS 1 DIV 1 WITHIN CLASSIFIED BOUNDARY. IF LOCATION IS ABOVE BOUNDARY, NEMA 4X WITH CLASSIFIED SEAL OFFS IS ACCEPTABLE. PROVIDE PERMANENT LABEL SUITABLE FOR CORROSIVE ENVIRONMENTS AND UV RESISTANT. MATCH LABEL NAMING CONVENTION WITH P&ID. SEE DETAIL 5 ON SHEET E4.2 & SEE DETAIL 1 ON SHEET E4.4.

(99) CLASSIFIED AREA VERIFY BOUNDARY WITH THE NFPA. INSTALL ANY PANELS, DISCONNECTS, SPLICES, ARC MAKING EQUIPMENT OUT OF THE BOUNDARY, WHERE NOT POSSIBLE THEN INSTALL CLASS 1 DIV 1 LISTED EQUIPMENT. ALL CONDUIT WITHIN BOUNDARY SHALL BE CLASS 1 DIV 1 OR 2 RATED AS REQUIRED BY THE BOUNDARY. USE PVC COATED THREADED RMC CONDUIT, INSTALL STAINLESS STEEL 316 ENCLOSURES, HARDWARE AND EQUIPMENT WITHIN 10 FEET OF THE BOUNDARY. INSTALL CLASSIFIED SEAL OFFS WITHIN 10 FEET OF THE BOUNDARY, AT A PANEL OR JUNCTION BOX IS PREFERRED.

ISSUED FOR BID

WRIGHT engineering corporation
ELECTRICAL ENGINEERING AND DESIGN
165 EAST CHILTON DRIVE
CHANDLER, ARIZONA 85225
PHONE: 480.497.5829
FAX: 480.497.5807
www.wrightengineering.us
Wright Project # 23319

CALL TWO WORKING DAYS BEFORE YOU DIG
602-263-1100
1-800-STAKE-IT
(OUTSIDE MARICOPA COUNTY)

NO	BY	DATE	REVISIONS	DATE	APP.

Registered Professional Engineer (Electrical) Certificate No. 73954 JACOB BIELEFELDT Date Signed 11-24-2025 Expires 9-30-27

PREPARED BY: WRIGHT ENGINEERING
DESIGNED BY: JHB
DRAWN BY: XAG
CHECKED BY: JHB SCALE: AS NOTED
DATE NOV 2025
JOB NO. B614

TITLE: ELECTRICAL SINGLE LINE DIAGRAM II

JOB: TOWN OF JEROME WASTEWATER TREATMENT PLANT
YAVAPAI CO. AZ

PREPARED BY: PACE Advanced Water Engineering
8723 E. VIA de COMMERCIO, SUITE A-204 | SCOTTSDALE, CA 85258
P: (408) 991-3595 | www.pacewater.com

SHEET E2.2
74 OF 99 SHEETS
JOB NO. B614

THESE DRAWINGS ARE THE PROPERTY OF P.A.C.E. AND SHALL NOT BE REPRODUCED IN ANY MANNER NOR BE USED FOR CONSTRUCTION UNLESS STAMPED "ISSUED FOR CONSTRUCTION".

H:\2023\23319-Jerome WWTP\23319-E.dwg - Tab: E2.2 - by jacobb on 11/24/25 at 6:56:46 PM

Item I.

SES LOAD CALCULATION SUMMARY

LOAD DESCRIPTION	LOAD	STANDBY
MCC–A	256.6	256.6
PANEL L1	5.0	0
TOTAL AMPS AT 480V 3ø	261.6	256.6
TOTAL KVA AT 480V 3ø	217.5	217.5

MCC LOAD CALCULATION SUMMARY

LOAD DESCRIPTION	LOAD	STANDBY
SBR AERATION BLOWER NO. 1 BLR–04310 (20HP)	27.0	27.0
SBR AERATION BLOWER NO. 2 BLR–04311 (20HP)	27.0	27.0
SBR AERATION BLOWER NO. 3 BLR–04312 (20HP)	27.0	27.0
DIGESTION AERATION BLOWER NO. 1 BLR–04313 (7.5HP)	11.0	11.0
SBR SUBMERSIBLE MIXER NO. 1 MXR–05110 (3.6HP)	7.6	7.6
SBR SUBMERSIBLE MIXER NO. 2 MXR–05112 (3.6HP)	7.6	7.6
WAS TRANSFER PUMP NO. 1 PMP–05100 (1.8HP)	3.4	3.4
WAS TRANSFER PUMP NO. 2 PMP–05101 (1.8HP)	3.4	3.4
SBR DECANT MODULATING VALVE NO. 1 BFV–05121 (1/3HP)	1.1	1.1
SBR DECANT VALVE NO. 2 BFV–05123 (1/3HP)	1.1	1.1
SBR POST–EQ VALVE BFV–05121 (1/3HP)	1.1	1.1
DRYING BED LIFT PUMP CONTROL PANEL	19.1	19.1
HEADWORKS CONTROL PANEL	5.6	5.6
SLUDGE BAGGING SYSTEM CONTROL PANEL	12.1	12.1
PANEL 'L2'	95.7	95.7
25% OF THE LARGEST MOTOR	**6.8**	**6.8**
TOTAL AMPS / 480V 3ø	256.6	256.6
TOTAL KVA AT / ø	213.3	213.3

DRYING BED LIFT PUMP CONTROL PANEL LOAD CALCULATION SUMMARY

LOAD DESCRIPTION	LOAD	STANDBY
DRYING BED LIFT PUMP NO. 1 PMP–07400A (4.16HP)	7.6	7.6
DRYING BED LIFT PUMP NO. 2 PMP–07400B (4.16HP)	7.6	7.6
CONTROL	2.0	2.0
25% OF THE LARGEST MOTOR	1.9	1.9
TOTAL AMPS / 480V 3ø	19.1	19.1
TOTAL KVA AT / ø	15.9	15.9

HEADWORKS CONTROL PANEL LOAD CALCULATION SUMMARY

LOAD DESCRIPTION	LOAD	STANDBY
INFLUENT COARSE SCREEN NO. 1 M–03010A (.16HP)	1.1	1.1
INFLUENT COARSE SCREEN NO. 2 M–03010B (.16HP)	1.1	1.1
INFLUENT COARSE SCREEN CONVERYOR M–03010C (1/2HP)	1.1	1.1
CONTROL	2.0	2.0
25% OF THE LARGEST MOTOR	**0.3**	**0.3**
TOTAL AMPS / 480V 3ø	5.6	5.6
TOTAL KVA AT / ø	4.6	4.6

SLUDGE BAGGING SYSTEM CONTROL PANEL LOAD CALCULATION SUMMARY

LOAD DESCRIPTION	LOAD	STANDBY
DEWATERING FEED PUMP PMP–08400 (3HP)	4.8	4.8
DRY POLYMER MAKE–DOWN AND FEED UNIT MXR–08410 (1/4HP)	1.1	1.1
CONTROL	5.0	5.0
25% OF THE LARGEST MOTOR	**1.2**	**1.2**
TOTAL AMPS / 480V 3ø	12.1	12.1
TOTAL KVA AT / ø	10.1	10.1

SBR CONTROL PANEL LOAD CALCULATION SUMMARY

LOAD DESCRIPTION	LOAD Aø	LOAD Bø	STANDBY
SBR INFLUENT VALVE NO. 1 PV–05120 (1/2HP)	9.8		9.8
SBR INFLUENT VALVE NO. 2 PV–05122 (1/2HP)		9.8	9.8
DECANT MOTOR NO. 1 M–05111 (1/2HP)	9.8		9.8
DECANT MOTOR NO. 2 M–05113 (1/2HP)		9.8	9.8
SBR AIR VALVE #1 (1/2 HP)	9.8		9.8
SBR AIR VALVE #2 (1/2 HP)		9.8	9.8
CONTROL	2.0		2.0
25% OF THE LARGEST MOTOR	**2.5**		**2.5**
TOTAL AMPS / 120V 1ø	33.9	29.4	33.9
TOTAL KVA AT / ø	4.1	3.5	4.1

PANEL NAME: L1			120/240V, 1ø, 3W				60A MAIN BKR		
LOCATION: SEE SITE PLAN			TYPE: PLUG–IN				PEDESTAL MTD., NEMA 4X		
CKT NO.	BKR SIZE	DESCRIPTION	LOAD	Aø	Bø	LOAD	DESCRIPTION	BKR SIZE	CKT NO.
1	20/	OVERFLOW LIFT PUMP MOTOR CONTROL PANEL	1200	1200		0	SPARE	20/1	2
3	/2		1200		1200	0	SPARE	20/1	4
5	20/1	SPARE	0	0		0	SPARE	20/1	6
CODE TOTAL VA/ø				1200	1200	*INDICATES LOAD @ 125%			
CODE TOTAL AMPS/ø				10.0	10.0	22,000 AIC BREAKERS			

PANEL NAME: L2			120/240V, 1ø, 3W				200A MAIN BKR		
LOCATION: BUILDING			TYPE: PLUG–IN				WALL MTD., NEMA 4X		
CKT NO.	BKR SIZE	DESCRIPTION	LOAD	Aø	Bø	LOAD	DESCRIPTION	BKR SIZE	CKT NO.
1	20/1	*BUILDING EXTERIOR LIGHTS	235	435		200	FLOW METER	20/1	2
3	20/1	*LAB LIGHTS + BLOWER ROOM + EM LIGHT	963		5031	4068	SBR CONTROL PANEL	45/	4
5	20/1	BLOWER ROOM + EXTERIOR RECEPTACLE	900	4428		3528		/2	6
7	20/1	*RESTROOM LIGHTS + EXHAUST FAN + RECEPTACLE	420		1620	1200	GENERATOR ON BOARD PANEL	60/	8
9	20/1	LAB RECEPTACLES 3	1080	2280		1200		/2	10
11	20/1	LAB RECEPTACLES 4	1440		7940	6500	LAB TANKLESS WATER HEATER	60/	12
13	20/	*SBR AREA LIGHTING*	302	6802		6500		/2	14
15	/2		302		6802	6500	RR TANKLESS WATER HEATER	60/	16
17	20/	A/C UNIT OUTDOOR	1759	8259		6500		/2	18
19	/2		1759		1759	0	BUSSED SPACE		20
21	20/1	A/C UNIT INDOOR	600	600		0	BUSSED SPACE		22
23		BUSSED SPACE	0		0	0	BUSSED SPACE		24
25		BUSSED SPACE	0	0		0	BUSSED SPACE		26
27		BUSSED SPACE	0		0	0	BUSSED SPACE		28
29		BUSSED SPACE	0	0		0	BUSSED SPACE		30
31		BUSSED SPACE	0		0	0	BUSSED SPACE		32
33		BUSSED SPACE	0	0		0	BUSSED SPACE		34
35		BUSSED SPACE	0		0	0	BUSSED SPACE		36
37		BUSSED SPACE	0	0		0	BUSSED SPACE		38
39		BUSSED SPACE	0		0	0	BUSSED SPACE		40
41		BUSSED SPACE	0	0		0	BUSSED SPACE		42
CODE TOTAL VA/ø				22804	23152	*INDICATES LOAD @ 125%			
CODE TOTAL AMPS/ø				190.0	192.9	22,000 AIC BREAKERS			

WRIGHT engineering corporation
ELECTRICAL ENGINEERING AND DESIGN
165 EAST CHILTON DRIVE
CHANDLER, ARIZONA 85225
PHONE: 480.497.5829
FAX: 480.497.5807
www.wrightengineering.us
Wright Project # 23319

CALL TWO WORKING DAYS BEFORE YOU DIG
602-263-1100
1-800-STAKE-IT
(OUTSIDE MARICOPA COUNTY)

NO	BY	REVISIONS	DATE	APP.

Registered Professional Engineer (Electrical) Certificate No. 73954 JASON BILLEDT 09-30-27 Expires 9-30-27

PREPARED BY: WRIGHT ENGINEERING
DESIGNED BY: JHB
DRAWN BY: XAG
CHECKED BY: JHB
SCALE: AS NOTED
DATE: NOV 2025
JOB NO.: B614

THESE DRAWINGS ARE THE PROPERTY OF P.A.C.E. AND SHALL NOT BE REPRODUCED IN ANY MANNER NOR BE USED FOR CONSTRUCTION UNLESS STAMPED "ISSUED FOR CONSTRUCTION".

TITLE: ELECTRICAL LOAD CALCULATIONS

JOB: TOWN OF JEROME WASTEWATER TREATMENT PLANT
YAVAPAI CO. AZ

ISSUED FOR BID

PREPARED BY:
PACE
Advanced Water Engineering
8723 E. VIA de COMERCIO, SUITE A, SCOTTSDALE, CA 85258
P: (480) 991-3595 | www.pacewater.com

SHEET
E2.3
75 OF 99 SHEETS

JOB NO. B614

CONDUIT AND WIRE SCHEDULE FOR POWER

CONDUIT NO.	CONDUIT SIZE	WIRE POWER	WIRE GROUND	FROM	TO	REMARKS
POWER COMPANY						
P000	PER POWER COMPANY (APS) PLANS AND SPECIFICATIONS			POWER COMPANY TRANSFORMER	SES	
MAIN POWER						
P100	(2) 3.5"	4-#350KCMIL (2) PARALLEL	1-#3/0 (2) PARALLEL	SES	AUTOMATIC TRANSFER SWITCH	(2) PARALLEL CONDUCTORS TOTAL DISTANCE 1085'
P101	(2)3"	4-#3/0 (2) PARALLEL	1-#2 (2) PARALLEL	GENERATOR	AUTOMATIC TRANSFER SWITCH	(2) PARALLEL CONDUCTORS
P102	(2)3"	4-#3/0 (2) PARALLEL	1-#2 (2) PARALLEL	AUTOMATIC TRANSFER SWITCH	DSP-1	(2) PARALLEL CONDUCTORS
P103	1"	3-#10	1-#10	PANEL 'L2'	GENERATOR'S ON-BOARD PANEL	
P104	1.5"	2-#2	1-#8	DISTRIBUTION PANEL DSP-1	50KVA TRANSFORMER T2	
P105	2"	3-#3/0	1-#6	50KVA TRANSFORMER T2	PANEL 'L2'	
P120	1"	3-#6	1-#10	PANEL 'L2'	SBR PANEL	
P121	1"	2-#12	1-#12	PANEL 'L2'	AREA LIGHT	CKT. L2-7
P122	1"	2-#12	1-#12	PANEL 'L2'	BUILDING MISC.	SEE SITE FOR CKT.
P123	1"	2-#12	1-#12	PANEL 'L2'	SITE RECEPTACLE	CKT. L2-9
P131	1"	PULL ROPE		SEE SITE PLAN		SPARE
P132	2"	PULL ROPE		SEE SITE PLAN		SPARE
P133	3.5"	PULL ROPE		SEE SITE PLAN		SPARE
HEADWORKS STATION						
P200	1"	3-#10	1-#10	DISTRIBUTION PANEL DSP-1	HEADWORKS CONTROL PANEL	
P201	1"	3-#12	1-#12	HEADWORKS STATION CONTROL PANEL	INFLUENT COARSE SCREEN	M-03010A
P202	1"	3-#12	1-#12	HEADWORKS STATION CONTROL PANEL	INFLUENT COARSE SCREEN	M-03010B
P203	1"	3-#12	1-#12	HEADWORKS STATION CONTROL PANEL	INFLUENT COARSE SCREEN CONVEYOR	M-03010C
P204	1"	2-#12	1-#12	HEADWORKS STATION CONTROL PANEL	SOLENOID VALVE	V-02020

CONDUIT AND WIRE SCHEDULE FOR POWER

CONDUIT NO.	CONDUIT SIZE	WIRE POWER	WIRE GROUND	FROM	TO	REMARKS
SEQUENCING BATCH REACTOR						
P300	1"	3-#10	1-#10	DISTRIBUTION PANEL DSP-1	MCP#1	
P301A	1"	3-#12	1-#12	MCP#1	J-BOX P1	MXR-05110
		3-#12	1-#12			PMP-05100
		3-#12	1-#12			BFV-05121
P301B	1"	2-#12	1-#12	SBR CONTROL PANEL		M-05111
		2-#12	1-#12			PV-05120
		2-#12	1-#12			SBR AIR VALVE #1
P302	1"	3-#12	1-#12	J-BOX P1	SBR MIXER #1	MXR-05110
P303	1"	3-#12	1-#12		WAS TRANSFER PUMP #1	PMP-05100
P322	1"	3-#12	1-#12		DECANTER VALVE #1	BFV-05121
P311	1"	2-#12	1-#12		DECANTER #1	M-05111
P312	1"	2-#12	1-#12		SBR INFLUENT VALVE #1	PV-05120
P317	1"	2-#12	1-#12		SBR AIR VALVE #1	
P350	1"	3-#12	1-#12	DISTRIBUTION PANEL DSP-1	MCP#2	
P351A	1"	3-#12	1-#12	MCP#2	J-BOX P2	MXR-05112
		3-#12	1-#12			PMP-05101
		3-#12	1-#12			BFV-05123
P351B	1"	2-#12	1-#12	SBR CONTROL PANEL		M-05113
		2-#12	1-#12			PV-05122
		2-#12	1-#12			SBR AIR VALVE #2
P352	1"	3-#12	1-#12	J-BOX P2	SBR MIXER #2	MXR-05112
P353	1"	3-#12	1-#12		WAS TRANSFER PUMP #2	PMP-05101
P372	1"	3-#12	1-#12		DECANTER VALVE #2	BFV-05123
P361	1"	2-#12	1-#12		DECANTER #2	M-05113
P362	1"	2-#12	1-#12		SBR INFLUENT VALVE #2	PV-05122
P367	1"	2-#12	1-#12		SBR AIR VALVE #2	

CONDUIT AND WIRE SCHEDULE FOR POWER

CONDUIT NO.	CONDUIT SIZE	WIRE POWER	WIRE GROUND	FROM	TO	REMARKS
CHLORINE CONTACT AND DIGESTER						
P400	3"	2-#12	1-#12	PANEL 'L2'	FLOW METER	FM-06240
P401	3"	2-#12	1-#12	DISTRIBUTION PANEL DSP-1	BUTTERFLY VALVE	BFV-06221
BLOWER ROOM						
P501	1"	3-#8	1-#8	DISTRIBUTION PANEL DSP-1	AERATION BLOWER VFD #1	BLR-04310
P511	1"	3-#8	1-#8	AERATION BLOWER VFD #1	BLR-04310	
P502	1"	3-#8	1-#8	DISTRIBUTION PANEL DSP-1	AERATION BLOWER VFD #2	BLR-04311
P512	1"	3-#8	1-#8	AERATION BLOWER VFD #2	BLR-04311	
P503	1"	3-#8	1-#8	DISTRIBUTION PANEL DSP-1	AERATION BLOWER VFD #3	BLR-04312
P513	1"	3-#8	1-#8	AERATION BLOWER VFD #3	BLR-04312	
P504	1"	3-#12	1-#12	DISTRIBUTION PANEL DSP-1	DIGESTION BLOWER VFD #4	BLR-04313
P514	1"	3-#12	1-#12	DIGESTION BLOWER VFD #4	BLR-04313	
DEWATERING						
P600	1"	3-#10	1-#10	DISTRIBUTION PANEL DSP-1	SLUDGE BAGGING SYSTEM CONTROL PANEL	
P601	1"	3-#12	1-#12	SLUDGE BAGGING SYSTEM CONTROL PANEL	DEWATERING FEED PUMP	PMP-08400
P602	1"	3-#12	1-#12	SLUDGE BAGGING SYSTEM CONTROL PANEL	DRY POLYMER MIXING UNIT	MXR-08410
P603	1"	2-#12	1-#12	SLUDGE BAGGING SYSTEM CONTROL PANEL	POTABLE WATER VALVE	V-02420
P604	1"	2-#12	1-#12	SLUDGE BAGGING SYSTEM CONTROL PANEL	POLYMER PUMP	PMP-08401
DRYING BED LIFT STATION						
P700	2"	3-#8	1-#8	DISTRIBUTION PANEL DSP-1	DRYING BED LIFT STATION CONTROL PANEL	TOTAL DISTANCE 225'
P701	1"	3-#12	1-#12	DRYING BED LIFT STATION CONTROL PANEL	DRYING BED LIFT PUMP	PMP-07400A
P702	1"	3-#12	1-#12	DRYING BED LIFT STATION CONTROL PANEL	DRYING BED LIFT PUMP	PMP-07400B
P703	1"	3-#12	1-#12	DRYING BED LIFT STATION CONTROL PANEL	RECEPTACLE & AREA LIGHT	
OVERFLOW LIFT STATION						
P800	1"	2-#10	1-#10	SES	PANEL 'L1'	
P801	1"	2-#12	1-#12	PANEL 'L1'	OVERFLOW CONTROL PANEL	
P802	1"	2-#12	1-#12	OVERFLOW CONTROL PANEL	OVERFLOW PUMP	PMP-07401

NO	BY	DATE	REVISIONS	DATE	APP.

THESE DRAWINGS ARE THE PROPERTY OF P.A.C.E. AND SHALL NOT BE REPRODUCED IN ANY MANNER NOR BE USED FOR CONSTRUCTION UNLESS STAMPED "ISSUED FOR CONSTRUCTION".

Registered Professional Engineer (Electrical) Certificate No. 73954 JAMES BELLEVUE JOHNSON Date Signed Expires 9-30-27

PREPARED BY: WRIGHT ENGINEERING
DESIGNED BY: JHB
DRAWN BY: XAG
CHECKED BY: JHB
SCALE: AS NOTED
DATE: NOV 2025
JOB NO.: B614

TITLE: ELECTRICAL CONDUIT + WIRE TABLES I

JOB: TOWN OF JEROME WASTEWATER TREATMENT PLANT YAVAPAI CO. AZ

PREPARED BY: PACE Advanced Water Engineering
8723 E. Via de Commercio, Suite 104, Scottsdale, CA 85258
p. (408) 991-3595 | www.pacewater.com

ISSUED FOR BID

SHEET E2.4
76 OF 99 SHEETS

JOB NO. B614

WRIGHT engineering corporation
ELECTRICAL ENGINEERING AND DESIGN
165 EAST CHILTON DRIVE
CHANDLER, ARIZONA 85225
PHONE: 480.497.5829
FAX: 480.497.5807
www.wrightengineering.us
Wright Project # 23319

CALL TWO WORKING DAYS BEFORE YOU DIG
602-263-1100
1-800-STAKE-IT
(OUTSIDE MARICOPA COUNTY)

H:\2025\01 Jerome WWTP\25-E.dwg, Tab: E2.4, by pcable on 11/04/25 at 2:56:48 PM

CONDUIT AND WIRE SCHEDULE FOR CONTROL

CONDUIT NO.	CONDUIT SIZE	POWER	GROUND	CONTROL	FROM	TO	REMARKS
GENERATOR/SES							
C101	3/4"		#14	(2)#14	AUTOMATIC TRANSFER SWITCH	GENERATOR	
C102	3/4"		#14	(2)#14	SBR CONTROL PANEL	AUTOMATIC TRANSFER SWITCH	
C103	3/4"		#14	(6)#14	SBR CONTROL PANEL	GENERATOR	
C104	3/4"		#14	(2)#14	GENERATOR	E-STOP	EST-01000
C105	2"	PULL ROPE			SBR CONTROL PANEL	MCC	
C106	1"	PULL ROPE			SEE SITE PLAN		SPARE
HEADWORKS STATION							
C200	3/4"		#14	(2)#14	SBR CONTROL PANEL	HEADWORKS CONTROL PANEL	
C201	3/4"		#14	(2)#14	HEADWORKS CONTROL PANEL	INFLUENT COARSE SCREEN	EST-03010A
C202	3/4"		#14	(2)#14	HEADWORKS CONTROL PANEL	INFLUENT COARSE SCREEN	EST-03010B
C203	3/4"		#14	(2)#14	HEADWORKS CONTROL PANEL	INFLUENT COARSE SCREEN CONVEYOR	EST-03010C
C204	3/4"		#14	(6)#14	HEADWORKS CONTROL PANEL	V-02020	ZSO-03023,ZSC-03023, HS-03023
C205	1.5"			(4) FACTORY CABLE	HEADWORKS CONTROL PANEL	CONDUIT BODY	LE-03031
C206	3/4"			FACTORY CABLE	HEADWORKS CONTROL PANEL	LEVEL SENSOR	LE-03031
C207	3/4"			FACTORY CABLE	HEADWORKS CONTROL PANEL	LEVEL SENSOR	LE-03032
C208	3/4"			FACTORY CABLE	HEADWORKS CONTROL PANEL	LEVEL SENSOR	LE-03033
C209	3/4"			FACTORY CABLE	HEADWORKS CONTROL PANEL	LEVEL SENSOR	LE-03034

TP=TWISTED SHIELDED PAIR

CONDUIT AND WIRE SCHEDULE FOR CONTROL

CONDUIT NO.	CONDUIT SIZE	POWER	GROUND	CONTROL	FROM	TO	REMARKS
SEQUENCING BATCH REACTOR							
C300	1"		#14	(6)#14	SBR CONTROL PANEL	MCP#1	MXR-05110
				(6)#14			PMP-05100
C350	1"		#14	(6)#14	SBR CONTROL PANEL	MCP#2	MXR-05112
				(6)#14			PMP-05101
C301	1"		#14	(4)#14	MCP#1	J-BOX C1	ME & TE-05110
				(4)#14			ME & TE-05100
C351	1"		#14	(4)#14	MCP#2	J-BOX C2	ME & TE-05112
				(4)#14			ME & TE-05101
C302	1"			FACTORY CABLE	J-BOX C1	MXR-05110	ME & TE-05110
C303	1"			FACTORY CABLE		PMP-05100	ME & TE-05100
C352	1"			FACTORY CABLE	J-BOX C2	MXR-05112	ME & TE-05112
C353	1"			FACTORY CABLE		PMP-05101	ME & TE-05101
C310	1.5"		#14	(8)#14	SBR CONTROL PANEL	J-BOX C1	M-05111
				(8)#14			PV-05120
				(2)#14			LSH-05131A
				(2)#14			LSL-05131B
				(4)#14			SBR AIR VALVE #1
C360	1.5"		#14	(8)#14		J-BOX C2	M-05113
				(8)#14			PV-05122
				(2)#14			LSH-05133A
				(2)#14			LSL-05133B
				(4)#14			SBR AIR VALVE #2
C311	1"			FACTORY CABLE	J-BOX C1	DECANTER #1	M-05111
C312	1"			(8)#14		SBR INFLUENT VALVE #1	PV-05120
C313				FACTORY CABLE		HIGH LEVEL FLOAT #3	LSH-05231
C314	1"			(2) FACTORY CABLE		CONDUIT BODY 1	LSH-05131A, LSH-05131B
C315	3/4"			FACTORY CABLE	CONDUIT BODY 1	HIGH LEVEL FLOAT #1	LSH-05131A
C316	3/4"			FACTORY CABLE		LOW LEVEL FLOAT #1	LSL-05131B
C317	3/4"			(4)#14	J-BOX C1	SBR AIR VALVE #1	
C361	1"			FACTORY CABLE	J-BOX C2	DECANTER #2	M-05113
C362	1"			(8)#14		SBR INFLUENT VALVE #2	PV-05122
C363				FACTORY CABLE		HIGH LEVEL FLOAT #4	LSH-05233
C364	1"			(2) FACTORY CABLE		CONDUIT BODY 2	LSH-05133A, LSH-05133B
C365	3/4"			FACTORY CABLE	CONDUIT BODY 2	HIGH LEVEL FLOAT #2	LSH-05133A
C366	3/4"			FACTORY CABLE		LOW LEVEL FLOAT #2	LSL-05133B
C367	3/4"			(4)#14	J-BOX C2	SBR AIR VALVE #2	
C320	1"			#16 TP	SBR CONTROL PANEL	J-BOX C1	LE-05130
				#16 TP			BFV-05121
				#16 TP			LE-05230
				#16 TP			AT-05160A
C370	1"			#16 TP	SBR CONTROL PANEL	J-BOX C2	LE-05132
				#16 TP			BFV-05123
				#16 TP			LE-05232
				#16 TP			AT-05161A
C321	3/4"			FACTORY CABLE	J-BOX C1	LEVEL SENSOR #1	LE-05130
C322	3/4"			#16 TP		DECANTER VALVE	BFV-05121
C323				FACTORY CABLE		LEVEL SENSOR #3	LE-05230
C324	3/4"			#16 TP		D.O. ANALYZER	AT-05160A
C325				FACTORY CABLE	D.O. ANALYZER	D.O. SENSOR	AE-05160B
C371	3/4"			FACTORY CABLE	J-BOX C2	LEVEL SENSOR #2	LE-05132
C372	3/4"			#16 TP		DECANTER VALVE	BFV-05123
C373				FACTORY CABLE		LEVEL SENSOR #4	LE-05232
C374	3/4"			#16 TP		D.O. ANALYZER	AT-05161A
C375				FACTORY CABLE	D.O. ANALYZER	D.O. SENSOR	AE-05161B

TP=TWISTED SHIELDED PAIR

CONDUIT AND WIRE SCHEDULE FOR CONTROL

CONDUIT NO.	CONDUIT SIZE	POWER	GROUND	CONTROL	FROM	TO	REMARKS
CHLORINE CONTACT							
C400	3/4"			#16TP	SBR CONTROL PANEL	FLOW METER	FM-06240 CHLORINE CONTACT
C401	1"			(2)#16TP	SBR CONTROL PANEL	V-02420	ZSO-06221, ZSC-06221, HS-06221 CHLORINE CONTACT
BLOWER ROOM							
C501			#14	(4)#14, (2)#16TP, CAT6	SBR CONTROL PANEL	BLOWER VFD BLR-04310	
C502			#14	(4)#14, (2)#16TP, CAT6		BLOWER VFD BLR-04311	
C503			#14	(4)#14, (2)#16TP, CAT6		BLOWER VFD BLR-04312	
C504			#14	(4)#14, (2)#16TP, CAT6		BLOWER VFD BLR-04313	
C511	3/4"		#14	(2)#14	BLOWER VFD BLR-04310	MOTOR RTD	TS-04310
C512	3/4"		#14	(2)#14	BLOWER VFD BLR-04311	MOTOR RTD	TS-04311
C513	3/4"		#14	(2)#14	BLOWER VFD BLR-04312	MOTOR RTD	TS-04312
C514	3/4"		#14	(2)#14	BLOWER VFD BLR-04313	MOTOR RTD	TS-04313
C520	1"		#14	(16)#14	SBR CONTROL PANEL	J-BOX	TT-04310, TT-04311, TT-04312, TT-04313
C530	1"			(4)#16TP			PT-04310, PT-04311, PT-04312, PT-04313
C521	3/4"		#14	(2)#14	J-BOX	THERMOSTAT AIR LINE BLOWER BLR-04310	TT-04310
C522	3/4"		#14	(2)#14		THERMOSTAT AIR LINE BLOWER BLR-04311	TT-04311
C523	3/4"		#14	(2)#14		THERMOSTAT AIR LINE BLOWER BLR-04312	TT-04312
C524	3/4"		#14	(2)#14		THERMOSTAT AIR LINE BLOWER BLR-04313	TT-04313
C531	3/4"			#16TP	J-BOX	PRESSURE TRANSDUCER AIR LINE BLOWER BLR-04310	PT-04310, PT-04311, PT-04312, PT-04313
C532	3/4"			#16TP		PRESSURE TRANSDUCER AIR LINE BLOWER BLR-04311	PT-04310, PT-04311, PT-04312, PT-04313
C533	3/4"			#16TP		PRESSURE TRANSDUCER AIR LINE BLOWER BLR-04312	PT-04310, PT-04311, PT-04312, PT-04313
C534	3/4"			#16TP		PRESSURE TRANSDUCER AIR LINE BLOWER BLR-04313	PT-04310, PT-04311, PT-04312, PT-04313
DEWATERING							
C600	1"		#14	(4)#14	SBR CONTROL PANEL	SLUDGE BAGGING SYSTEM CONTROL PANEL	
C601	3/4"		#14	(2)#14	SLUDGE BAGGING SYSTEM CONTROL PANEL	DEWATERING PUMP	PMP-08400, VERIFY CABLE TYPE WITH VENDOR
C602	3/4"		#14	(2)#14	SLUDGE BAGGING SYSTEM CONTROL PANEL	DRY POLYMER MIXING UNIT	MXR-08410, VERIFY CABLE TYPE WITH VENDOR
C603	3/4"		#14	(2)#14	SLUDGE BAGGING SYSTEM CONTROL PANEL	INFLUENT PLUG VALVE	V-02420, VERIFY CABLE TYPE WITH VENDOR
C604	3/4"		#14	(2)#14	SLUDGE BAGGING SYSTEM CONTROL PANEL	POLYMER PUMP	PMP-08401, VERIFY CABLE TYPE WITH VENDOR
DRYING BED LIFT STATION							
C700	1"		#14	(4)#14	SBR CONTROL PANEL	DRYING BED LIFT STATION CONTROL PANEL	
C701	1"		FACTORY CABLE		DRYING BED LIFT STATION CONTROL PANEL	PMP-07400A	
C702	1"		FACTORY CABLE		DRYING BED LIFT STATION CONTROL PANEL	PMP-07400B	
C706	1"		(3) FACTORY CABLE		DRYING BED LIFT STATION CONTROL PANEL	LEVEL FLOATS	LSHH-07430A, LSH-07430B, LSL-07430C
OVERFLOW LIFT STATION							
C801	1"		#14	(4)#14	SBR CONTROL PANEL	DRYING BED LIFT STATION CONTROL PANEL	
C802	1"		FACTORY CABLE		DRYING BED LIFT STATION CONTROL PANEL	PMP-07401	
C803	1"		(2) FACTORY CABLE		DRYING BED LIFT STATION CONTROL PANEL	LEVEL FLOATS	LSHH-07431A, LSL-07431B

TP=TWISTED SHIELDED PAIR

NO	BY	DATE	REVISIONS	DATE	APP.

Registered Professional Engineer (Electrical) Certificate No. 73954 JASON BILLETDEAUX 09-30-27 Expires 9-30-27

PREPARED BY: WRIGHT ENGINEERING
DESIGNED BY: JHB
DRAWN BY: XAG
CHECKED BY: JHB
SCALE: AS NOTED
DATE: NOV 2025
JOB NO.: B614

TITLE: ELECTRICAL CONDUIT + WIRE TABLES II

JOB: TOWN OF JEROME WASTEWATER TREATMENT PLANT YAVAPAI CO. AZ

THESE DRAWINGS ARE THE PROPERTY OF P.A.C.E. AND SHALL NOT BE REPRODUCED IN ANY MANNER NOR BE USED FOR CONSTRUCTION UNLESS STAMPED "ISSUED FOR CONSTRUCTION".

ISSUED FOR BID

PREPARED BY:
PACE
Advanced Water Engineering
8723 E. VIA de VENTURA, SUITE A-200, SCOTTSDALE, CA 85258
P: (480) 991-3995 | www.pacewater.com

SHEET E2.5
77 OF 99 SHEETS

JOB NO. B614

WRIGHT engineering corporation
ELECTRICAL ENGINEERING AND DESIGN
165 EAST CHILTON DRIVE
CHANDLER, ARIZONA 85225
PHONE: 480.497.5829
FAX: 480.497.5807
www.wrightengineering.us
Wright Project # 23319

CALL TWO WORKING DAYS BEFORE YOU DIG
602-263-1100
1-800-STAKE-IT
(OUTSIDE MARICOPA COUNTY)

C:\DOCS\Projects\WWTP\23319 E Dwg Tabs E2.5 hyperlink on 11x17 4-28-25.dwg

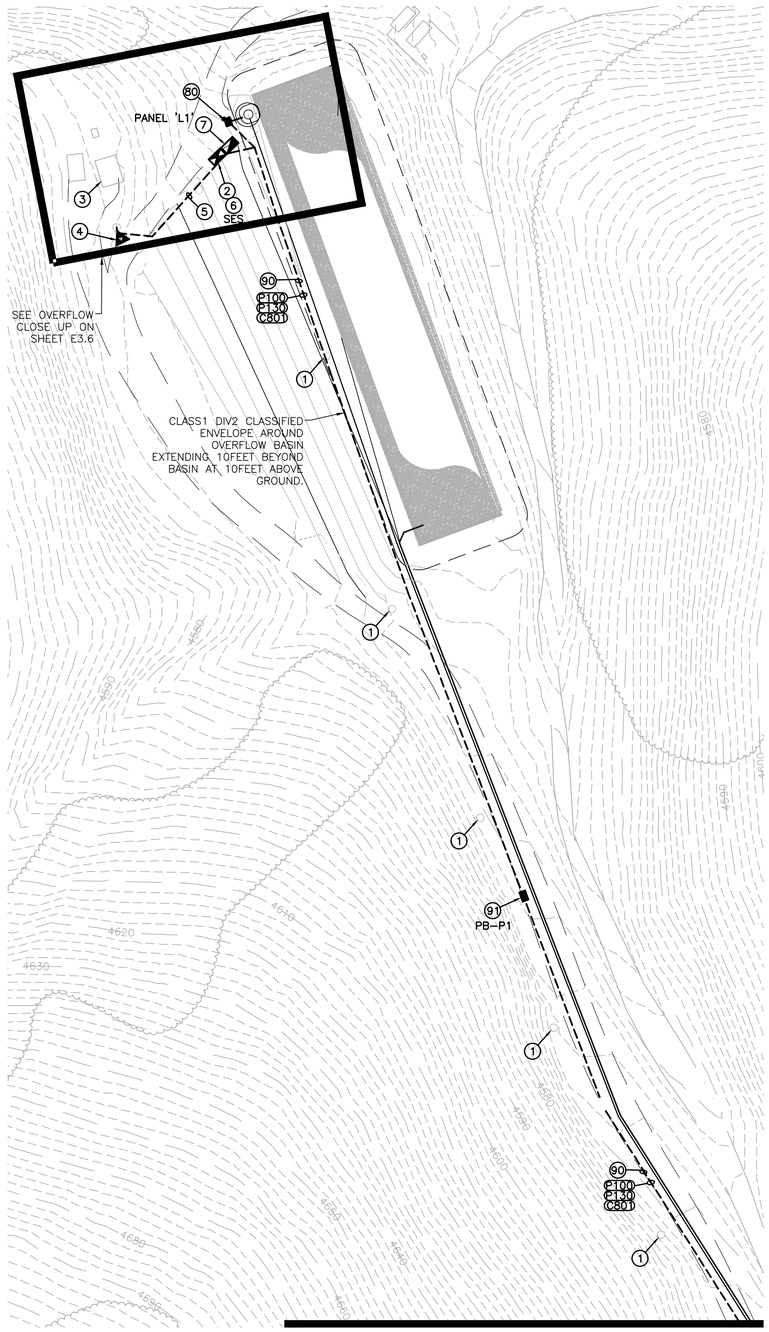

MATCHLINE 'A' SEE ABOVE RIGHT

MATCHLINE 'A' BELOW LEFT

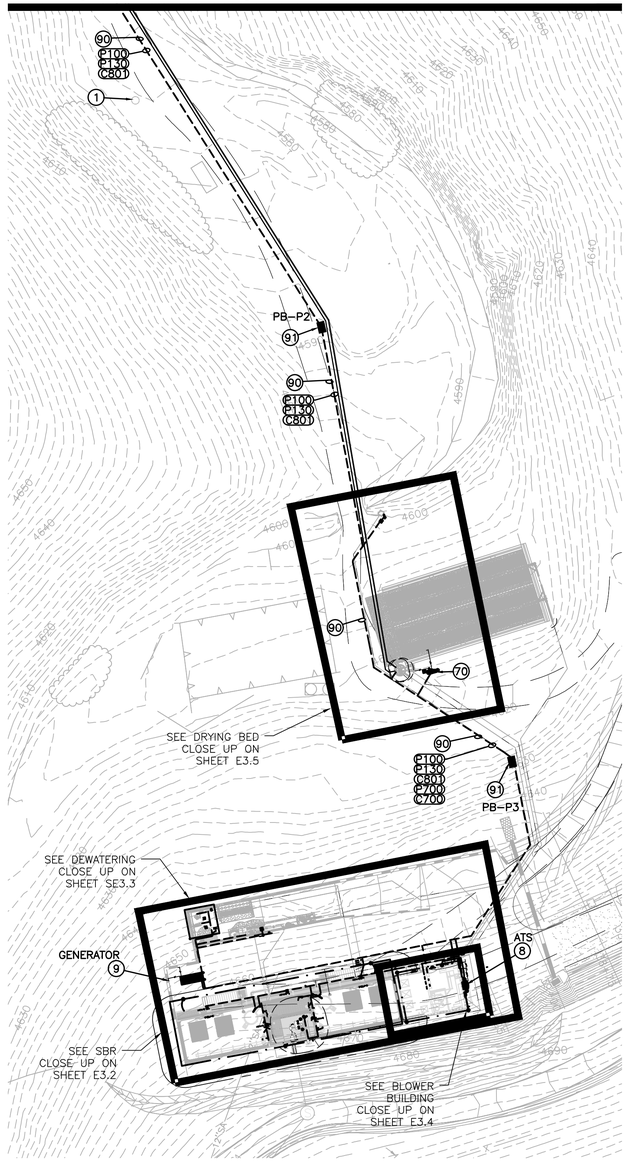

CONSTRUCTION NOTES

1. REMOVE ALL EXISTING CUSTOMER OWNED OVERHEAD ELECTRICAL AND POWER POLE AND DISPOSE OF PROPERLY. COORDINATE WITH OWNER FOR SCHEDULING.
2. REMOVE EXISTING SES AND PANEL AND DISPOSE OF PROPERLY. COORDINATE DISCONNECTION OF THE METER AND SECONDARY CONDUCTORS WITH APS
3. DE-ENERGIZE EXISTING LAB BUILDING UPON COMPLETION OF CONSTRUCTION OF THE NEW LAB. REMOVE ALL EXISTING CONDUCTORS AND ELECTRICAL EQUIPMENT AND DISPOSE OF PROPERLY. COORDINATE ALL WORK WITH OWNER AND POWER COMPANY PRIOR TO DE-ENERGIZATION.
4. COORDINATE WITH APS TO REPLACE THE EXISTING POLE MOUNTED SINGLE PHASE TRANSFORMER. APS TO INSTALL THREE PHASE TRANSFORMERS. CONTRACTOR SHALL VERIFY LOCATION OF NEW TRANSFORMER WITH APS. APS PLANS WILL DETERMINE EXACT LOCATION AND TAKE PRECEDENCE OVER THESE DRAWINGS. COORDINATE ALL WORK WITH APS.
5. APS SERVICE LINE. TRENCH AND INSTALL CONDUIT PER APS SPECIFICATIONS. POWER COMPANY PLANS WILL DETERMINE EXACT LOCATION OF CONDUIT AND TAKE PRECEDENCE OVER THESE DRAWINGS.
6. SES, 400 AMP, 277/480V, 3ø, 4W, SEE DETAIL 1 ON E4.1.
7. MINI-POWER ZONE AND PANELBOARD. SEE DETAIL 1 ON E4.1.
8. ATS 400A 277/480V, 3ø, 4W, SEE DETAIL 2 ON SHEET E4.1.
9. GENERATOR 125KW, 277/480V, 3ø, 4W, SEE DETAIL 1 ON E4.3.
70. 30A DRYING BED LIFT PUMP CONTROL PANEL, 480V, 3ø, 4W. ELECTRICAL CONTRACTOR SHALL MAKE ALL POWER AND CONTROL CONNECTIONS PER THESE PLANS AND SPECIFICATIONS AND THE MANUFACTURERS REQUIREMENTS. SEE DETAIL 1 ON SHEET E4.4.
80. OVERFLOW LIFT PUMP CONTROL PANEL, BY VENDOR. 240V, 1ø, 3W. ELECTRICAL CONTRACTOR SHALL MAKE ALL POWER AND CONTROL CONNECTIONS PER THESE PLANS AND SPECIFICATIONS AND THE MANUFACTURERS REQUIREMENTS. SEE DETAIL 1 ON SHEET E4.4.
90. JOINT TRENCH WITH WATER LINES. MAINTAIN 24-INCH SEPARATION. SEE DETAIL 3 ON SHEET E4.3.
91. STACKED #7 CONCRETE PULL BOX. INSTALL AS SHOWN OR AS NEEDED IF CONDUIT RUNS WILL EXCEED 360 DEGREE OF BENDS OR THE LENGTH EXCEEDS 400 FEET. INSTALL 1 FOR POWER AND 1 FOR CONTROL. SEE DETAIL 5 ON SHEET E4.3.

LEGEND

- PROPOSED 3ø POWER COMPANY TRANSFORMER
- SES 400A 277/480V 3ø 4W
- TRANSFORMER 480V-120/240V
- PANEL 120/240V 1ø 3W
- CONTROL PANEL
- EYS SEALS, CLASS 1 DIVISION 1
- ELECTRICAL SWITCH
- 120V GFCI RECEPTACLE
- 120V GFCI QUADRUPLEX RECEPTACLE
- ELECTRICAL AND COMMUNICATION PULL BOXES
- NEW PULL BOX
- NON FUSED NEMA 4X DISCONNECT
- UNDERGROUND ELECTRICAL CONDUIT
- ABOVE GROUND ELECTRICAL CONDUIT
- FLEXIBLE METALLIC CONDUIT
- GROUNDING ELECTRODE CONDUCTOR
- GROUND ROD WITH INSPECTION WELL. INSPECTION WELL IS ONLY FOR THE FIRST GROUND ROD CONNECTED TO

PROPOSED SITE PLAN ELECTRICAL

NORTH

GRAPHIC SCALE
30 15 0 15 30 60
1 INCH = 30 FEET

WRIGHT engineering corporation
ELECTRICAL ENGINEERING AND DESIGN
165 EAST CHILTON DRIVE
CHANDLER, ARIZONA 85225
PHONE: 480.497.5829
FAX: 480.497.5807
www.wrightengineering.us
Wright Project # 23319

CALL TWO WORKING DAYS BEFORE YOU DIG
602-263-1100
1-800-STAKE-IT
(OUTSIDE MARICOPA COUNTY)

NO	BY	DATE	REVISIONS	DATE	APP.

Registered Professional Engineer (Electrical) Certificate No. 73954 JASON BILLEDEAU Date Signed 11-24-25 Expires 9-30-27

PREPARED BY: WRIGHT ENGINEERING
DESIGNED BY: JHB
DRAWN BY: XAG
CHECKED BY: JHB
SCALE: AS NOTED
DATE: NOV 2025
JOB NO. B614

THESE DRAWINGS ARE THE PROPERTY OF P.A.C.E. AND SHALL NOT BE REPRODUCED IN ANY MANNER NOR BE USED FOR CONSTRUCTION UNLESS STAMPED "ISSUED FOR CONSTRUCTION".

TITLE
ELECTRICAL
PROPOSED SITE PLAN

JOB
TOWN OF JEROME
WASTEWATER
TREATMENT PLANT
YAVAPAI CO. AZ

ISSUED FOR BID

PREPARED BY:
PACE
Advanced Water Engineering
8723 E. VIA de COMMERCIO, SUITE 1-A, SCOTTSDALE, CA 85258
P: (480) 991-3595 | www.pacewater.com

SHEET
E3.1
78 OF 99 SHEETS
JOB NO. B614

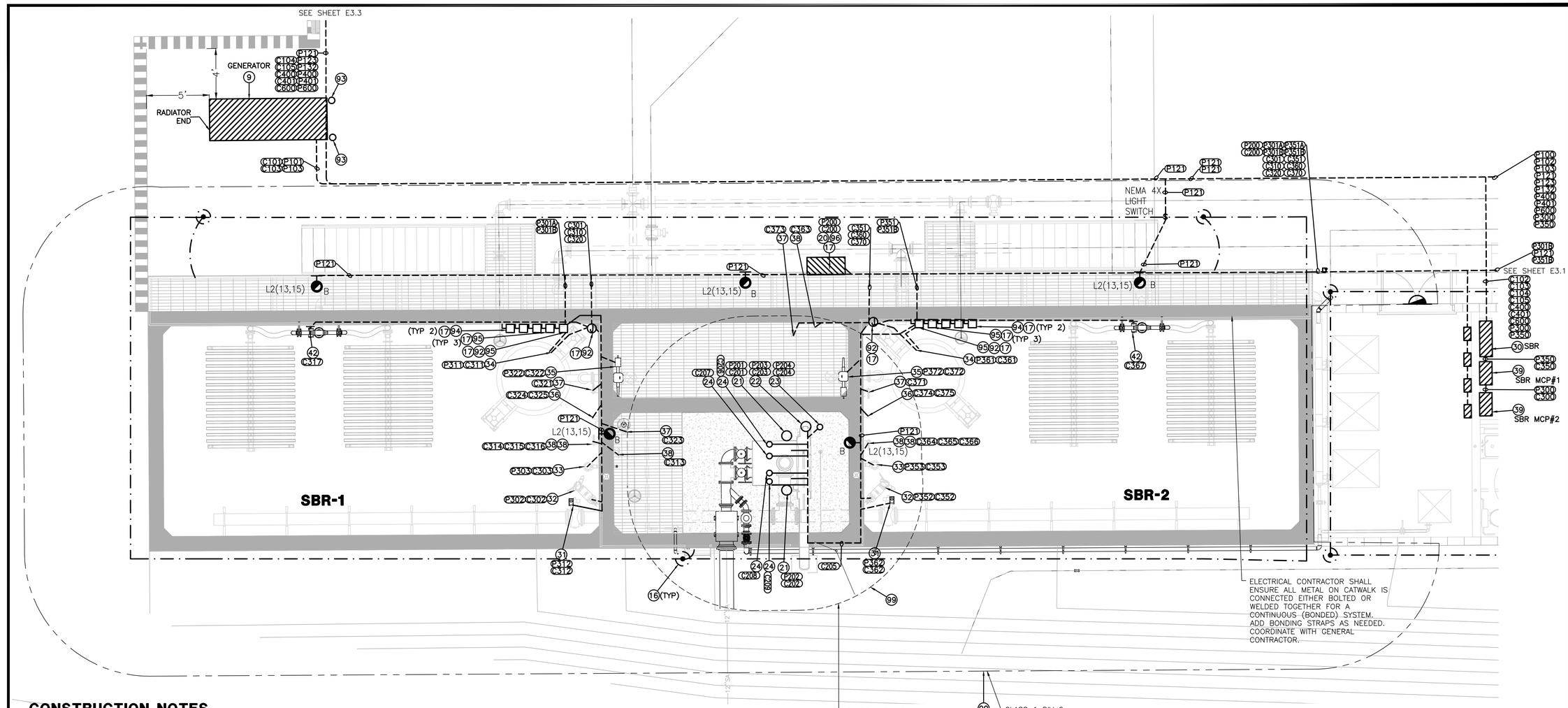

ELECTRICAL CONTRACTOR SHALL ENSURE ALL METAL ON CATWALK IS CONNECTED EITHER BOLTED OR WELDED TOGETHER FOR A CONTINUOUS (BONDED) SYSTEM. ADD BONDING STRAPS AS NEEDED. COORDINATE WITH GENERAL CONTRACTOR.

CONSTRUCTION NOTES

9. GENERATOR 125KW, 277/480V, 3ø, 4W, SEE DETAIL 1 ON E4.3.
16. LIGHTNING PROTECTION SYSTEM, PER NFPA AND DETAIL 6 ON SHEET E4.6
17. CLASSIFIED SEAL OFF LISTED FOR CLASS 1 DIV 1. LOCATE WITHIN 10 FEET OF CLASSIFIED AREA BOUNDARY. PVC COATED RMS EYS TYPE OR EQUIVALENT. SEAL SHALL HAVE SEALING COMPOUND CHICO, OR EQUAL.
20. 20A HEADWORKS CONTROL PANEL, BY VENDOR CLASS 1 DIVISION 2 LISTED. ELECTRICAL CONTRACTOR SHALL MAKE ALL POWER AND CONTROL CONNECTIONS PER THESE PLANS AND SPECIFICATIONS AND THE MANUFACTURERS REQUIREMENTS. SEE DETAIL 1 ON SHEET E4.4.
21. INFLUENT COARSE SCREEN MOTOR. ELECTRICAL CONTRACTOR SHALL MAKE ALL POWER AND CONTROL CONNECTIONS PER THESE PLANS AND SPECIFICATIONS AND THE MANUFACTURERS REQUIREMENTS.
22. INFLUENT CONVEYOR MOTOR. ELECTRICAL CONTRACTOR SHALL MAKE ALL POWER AND CONTROL CONNECTIONS PER THESE PLANS AND SPECIFICATIONS AND THE MANUFACTURERS REQUIREMENTS.
23. POTABLE SOLENOID VALVE AT HEADWORKS. ELECTRICAL CONTRACTOR SHALL MAKE ALL POWER AND CONTROL CONNECTIONS PER THESE PLANS AND SPECIFICATIONS AND THE MANUFACTURERS REQUIREMENTS.
24. ULTRASONIC LEVEL TRANSDUCER. ELECTRICAL CONTRACTOR SHALL MAKE ALL POWER AND CONTROL CONNECTIONS PER THESE PLANS AND SPECIFICATIONS AND THE MANUFACTURERS REQUIREMENTS.
30. SBR PANEL BY VENDOR, ELECTRICAL CONTRACTOR SHALL MAKE ALL POWER AND CONTROL CONNECTIONS PER THESE PLANS AND SPECIFICATIONS AND THE MANUFACTURERS REQUIREMENTS.
31. SBR INFLUENT VALVE. ELECTRICAL CONTRACTOR SHALL MAKE ALL POWER AND CONTROL CONNECTIONS PER THESE PLANS AND SPECIFICATIONS AND THE MANUFACTURERS REQUIREMENTS.
32. SBR SUBMERSIBLE MIXER. ELECTRICAL CONTRACTOR SHALL MAKE ALL POWER AND CONTROL CONNECTIONS PER THESE PLANS AND SPECIFICATIONS AND THE MANUFACTURERS REQUIREMENTS.
33. WAS TRANSFER PUMP. ELECTRICAL CONTRACTOR SHALL MAKE ALL POWER AND CONTROL CONNECTIONS PER THESE PLANS AND SPECIFICATIONS AND THE MANUFACTURERS REQUIREMENTS.
34. DECANT MOTOR. ELECTRICAL CONTRACTOR SHALL MAKE ALL POWER AND CONTROL CONNECTIONS PER THESE PLANS AND SPECIFICATIONS AND THE MANUFACTURERS REQUIREMENTS.
35. SBR DECANT VALVE. ELECTRICAL CONTRACTOR SHALL MAKE ALL POWER AND CONTROL CONNECTIONS PER THESE PLANS AND SPECIFICATIONS AND THE MANUFACTURERS REQUIREMENTS.
36. DO TRANSMITTER AND ANALYZER. ELECTRICAL CONTRACTOR SHALL MAKE ALL POWER AND CONTROL CONNECTIONS PER THESE PLANS AND SPECIFICATIONS AND THE MANUFACTURERS REQUIREMENTS.
37. SUBMERSIBLE PRESSURE TRANSDUCER. ELECTRICAL CONTRACTOR SHALL MAKE ALL POWER AND CONTROL CONNECTIONS PER THESE PLANS AND SPECIFICATIONS AND THE MANUFACTURERS REQUIREMENTS.
38. LEVEL FLOAT. ELECTRICAL CONTRACTOR SHALL MAKE ALL POWER AND CONTROL CONNECTIONS PER THESE PLANS AND SPECIFICATIONS AND THE MANUFACTURERS REQUIREMENTS.
39. SBR MOTOR CONTROL PANEL, PROVIDE AND INSTALL. ELECTRICAL CONTRACTOR SHALL MAKE ALL POWER AND CONTROL CONNECTIONS PER THESE PLANS AND SPECIFICATIONS AND THE MANUFACTURERS REQUIREMENTS.
40. SBR EFFLUENT VALVE. ELECTRICAL CONTRACTOR SHALL MAKE ALL POWER AND CONTROL CONNECTIONS PER THESE PLANS AND SPECIFICATIONS AND THE MANUFACTURERS REQUIREMENTS.
41. FLOW METER. ELECTRICAL CONTRACTOR SHALL MAKE ALL POWER AND CONTROL CONNECTIONS PER THESE PLANS AND SPECIFICATIONS AND THE MANUFACTURERS REQUIREMENTS.
42. SBR AIR VALVE. ELECTRICAL CONTRACTOR SHALL MAKE ALL POWER AND CONTROL CONNECTIONS PER THESE PLANS AND SPECIFICATIONS AND THE MANUFACTURERS REQUIREMENTS.
92. STANCHION MOUNTED NEMA 4X SST JUNCTION BOXES. MAINTAIN 3' CLEARANCE IN FRONT OF EQUIPMENT. EXTRA SLACK SHALL REMAIN IN THE J-BOX FOR FUTURE LEVEL ADJUSTMENT. SEE DETAIL 2 ON SHEET E4.2 AND DETAIL 1 ON SHEET E4.4.
93. TRAFFIC BOLLARD TO BE INSTALLED PER CIVIL PLANS. LOCATE OUT OF 4 FOOT WORKING SPACE ENVELOPE PER NEC.
94. NON-FUSED DISCONNECT, NEMA 4X FOR OUTDOOR AND CLASS 1 DIV 1 WITHIN CLASSIFIED BOUNDARY. IF LOCATION IS ABOVE BOUNDARY, NEMA 4X WITH CLASSIFIED SEAL OFFS IS ACCEPTABLE. PROVIDE PERMANENT LABEL SUITABLE FOR CORROSIVE ENVIRONMENTS AND UV RESISTANT. MATCH LABEL NAMING CONVENTION WITH P&ID. SEE DETAIL 5 ON SHEET E4.2 & SEE DETAIL 1 ON SHEET E4.4.
95. ROTARY TYPE DISCONNECT, NEMA 4X FOR OUTDOOR AND CLASS 1 DIV 1 WITHIN CLASSIFIED BOUNDARY. IF LOCATION IS ABOVE BOUNDARY, NEMA 4X WITH CLASSIFIED SEAL OFFS IS ACCEPTABLE. PROVIDE PERMANENT LABEL SUITABLE FOR CORROSIVE ENVIRONMENTS AND UV RESISTANT. MATCH LABEL NAMING CONVENTION WITH P&ID. SEE DETAIL 5 ON SHEET E4.2 & SEE DETAIL 1 ON SHEET E4.4.
96. E-STOP, NEMA 4X FOR OUTDOOR AND CLASS 1 DIV 1 WITHIN CLASSIFIED BOUNDARY. IF LOCATION IS ABOVE BOUNDARY, NEMA 4X WITH CLASSIFIED SEAL OFFS IS ACCEPTABLE. PROVIDE PERMANENT LABEL SUITABLE FOR CORROSIVE ENVIRONMENTS AND UV RESISTANT. MATCH LABEL NAMING CONVENTION WITH P&ID. SEE DETAIL 5 ON SHEET E4.2.

CLASS 1 DIV 2
PER NFPA 820
TABLE 5.2.2 SECTION 2C
COARSE FINE SCREEN FACILITIES NOT ENCLOSED, OPEN TO ATMOSPHERE/IF ENCLOSED, THEN THE CLASSIFICATION IS ONLY WITHIN THE TANK.

ENVELOPE: WITHIN A 10 FT AROUND EQUIPMENT AND OPEN CHANNEL

CLASS 1 DIV 2
PER NFPA 820
TABLE 5.2.2 SECTION 7C
PRIMARY SEDIMENTATION TANKS (SBR)
NOT ENCLOSED, OPEN TO ATMOSPHERE.

ENVELOPE: INTERIOR OF THE TANK FROM THE MINIMUM OPERATING WATER SURFACE TO THE TOP OF THE TANK WALL;

ENVELOPE 18 INCHES ABOVE THE TOP OF THE TANK AND EXTENDING 18 INCHES BEYOND THE EXTERIOR WALL;

ENVELOPE 18 INCHES ABOVE GRADE EXTENDING 10 FT HORIZONTALLY FROM THE EXTERIOR TANK WALLS

SBR PLAN ELECTRICAL

99. CLASSIFIED AREA VERIFY BOUNDARY WITH THE NFPA. INSTALL ANY PANELS, DISCONNECTS, SPLICES, ARC MAKING EQUIPMENT OUT OF THE BOUNDARY, WHERE NOT POSSIBLE THEN INSTALL CLASS 1 DIV 1 LISTED EQUIPMENT. ALL CONDUIT WITHIN BOUNDARY SHALL BE CLASS 1 DIV 1 OR 2 RATED AS REQUIRED BY THE BOUNDARY. USE PVC COATED THREADED RMC CONDUIT, INSTALL STAINLESS STEEL 316 ENCLOSURES, HARDWARE AND EQUIPMENT WITHIN 10 FEET OF THE BOUNDARY. INSTALL CLASSIFIED SEAL OFFS WITHIN 10 FEET OF THE BOUNDARY, AT A PANEL OR JUNCTION BOX IS PREFERRED.

LEGEND

- PROPOSED 3ø POWER COMPANY TRANSFORMER
- SES 400A 277/480V 3ø 4W
- TRANSFORMER 480V–120/240V
- PANEL 120/240V 1ø 3W
- CONTROL PANEL
- EYS SEALS, CLASS 1 DIVISION 1
- ELECTRICAL SWITCH
- 120V GFCI RECEPTACLE
- 120V GFCI QUADRUPLEX RECEPTACLE
- ELECTRICAL AND COMMUNICATION PULL BOXES
- NEW PULL BOX
- NON FUSED NEMA 4X DISCONNECT
- UNDERGROUND ELECTRICAL CONDUIT
- ABOVE GROUND ELECTRICAL CONDUIT
- FLEXIBLE METALLIC CONDUIT
- GROUNDING ELECTRODE CONDUCTOR
- GROUND ROD WITH INSPECTION WELL. INSPECTION WELL IS ONLY FOR THE FIRST GROUND ROD CONNECTED TO

GRAPHIC SCALE
4 2 0 2 4 8
1 INCH = 4 FEET
NORTH

WRIGHT engineering corporation
ELECTRICAL ENGINEERING AND DESIGN
165 EAST CHILTON DRIVE
CHANDLER, ARIZONA 85225
PHONE: 480.497.5829
FAX: 480.497.5807
www.wrightengineering.us
Wright Project # 23319

CALL TWO WORKING DAYS BEFORE YOU DIG
602-263-1100
1-800-STAKE-IT
(OUTSIDE MARICOPA COUNTY)

NO	BY	DATE	REVISIONS	DATE	APP.

Registered Professional Engineer (Electrical)
Certificate No. 73954
JAMES BRADLEY HUNT
Expires 9-30-27

PREPARED BY: WRIGHT ENGINEERING
DESIGNED BY: JHB
DRAWN BY: XAG
CHECKED BY: JHB
SCALE: AS NOTED
DATE: NOV 2025
JOB NO. B614

TITLE: ELECTRICAL SBR PLAN

JOB: TOWN OF JEROME WASTEWATER TREATMENT PLANT — YAVAPAI CO. AZ

THESE DRAWINGS ARE THE PROPERTY OF P.A.C.E. AND SHALL NOT BE REPRODUCED IN ANY MANNER NOR BE USED FOR CONSTRUCTION UNLESS STAMPED "ISSUED FOR CONSTRUCTION".

ISSUED FOR BID

PREPARED BY:
PACE
Advanced Water Engineering
Consulting Engineers, LLC
8723 E. VIA DE COMMERCIO, 1ST FLOOR, SCOTTSDALE, AZ 85258
P: (480) 991-3595 | www.pacewater.com

SHEET
E3.2
79 OF 99 SHEETS
JOB NO. B614

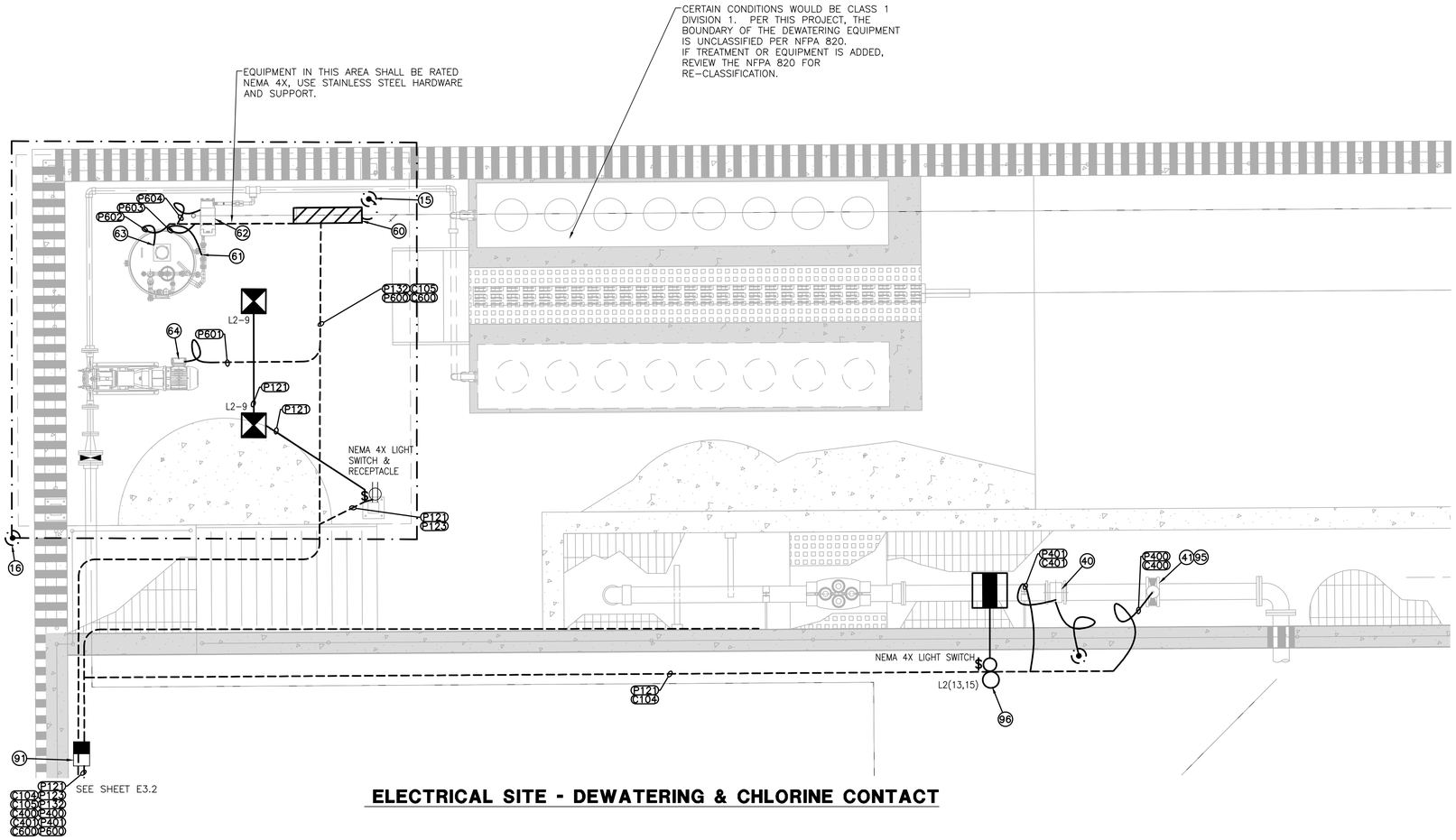

ELECTRICAL SITE - DEWATERING & CHLORINE CONTACT

CONSTRUCTION NOTES

15 GROUNDING ELECTRODE CONDUCTORS, GROUND ROD, AND INSPECTION WELL FOR ONLY THE FIRST GROUND ROD, PER SINGLE LINE DIAGRAMS AND DETAILS ON SHEET E4.6.

16 LIGHTNING PROTECTION SYSTEM, PER NFPA AND DETAIL 6 ON SHEET E4.6

40 SBR EFFLUENT VALVE. ELECTRICAL CONTRACTOR SHALL MAKE ALL POWER AND CONTROL CONNECTIONS PER THESE PLANS AND SPECIFICATIONS AND THE MANUFACTURERS REQUIREMENTS.

41 FLOW METER. ELECTRICAL CONTRACTOR SHALL MAKE ALL POWER AND CONTROL CONNECTIONS PER THESE PLANS AND SPECIFICATIONS AND THE MANUFACTURERS REQUIREMENTS.

60 20A SLUDGE BAGGING SYSTEM CONTROL PANEL, BY VENDOR. ELECTRICAL CONTRACTOR SHALL MAKE ALL POWER AND CONTROL CONNECTIONS PER THESE PLANS AND SPECIFICATIONS AND THE MANUFACTURERS REQUIREMENTS.

61 POTABLE WATER VALVE. ELECTRICAL CONTRACTOR SHALL MAKE ALL POWER AND CONTROL CONNECTIONS PER THESE PLANS AND SPECIFICATIONS AND THE MANUFACTURERS REQUIREMENTS.

62 POLYMER METERING PUMP. ELECTRICAL CONTRACTOR SHALL MAKE ALL POWER AND CONTROL CONNECTIONS PER THESE PLANS AND SPECIFICATIONS AND THE MANUFACTURERS REQUIREMENTS.

63 DRY POLYMER MIXER. ELECTRICAL CONTRACTOR SHALL MAKE ALL POWER AND CONTROL CONNECTIONS PER THESE PLANS AND SPECIFICATIONS AND THE MANUFACTURERS REQUIREMENTS.

64 DEWATERING FEED PUMP. ELECTRICAL CONTRACTOR SHALL MAKE ALL POWER AND CONTROL CONNECTIONS PER THESE PLANS AND SPECIFICATIONS AND THE MANUFACTURERS REQUIREMENTS.

91 STACKED #7 CONCRETE PULL BOX. INSTALL AS SHOWN OR AS NEEDED IF CONDUIT RUNS WILL EXCEED 360 DEGREE OF BENDS OR THE LENGTH EXCEEDS 400 FEET. INSTALL 1 FOR POWER AND 1 FOR CONTROL. SEE DETAIL 5 ON SHEET E4.3.

95 ROTARY TYPE DISCONNECT, NEMA 4X FOR OUTDOOR AND CLASS 1 DIV 1 WITHIN CLASSIFIED BOUNDARY. IF LOCATION IS ABOVE BOUNDARY, NEMA 4X WITH CLASSIFIED SEAL OFFS IS ACCEPTABLE. PROVIDE PERMANENT LABEL SUITABLE FOR CORROSIVE ENVIRONMENTS AND UV RESISTANT. MATCH LABEL NAMING CONVENTION WITH P&ID. SEE DETAIL 5 ON SHEET E4.2 & SEE DETAIL 1 ON SHEET E4.4.

96 E-STOP, NEMA 4X FOR OUTDOOR AND CLASS 1 DIV 1 WITHIN CLASSIFIED BOUNDARY. IF LOCATION IS ABOVE BOUNDARY, NEMA 4X WITH CLASSIFIED SEAL OFFS IS ACCEPTABLE. PROVIDE PERMANENT LABEL SUITABLE FOR CORROSIVE ENVIRONMENTS AND UV RESISTANT. MATCH LABEL NAMING CONVENTION WITH P&ID. SEE DETAIL 5 ON SHEET E4.2.

LEGEND

- PROPOSED 3ø POWER COMPANY TRANSFORMER
- SES 400A 277/480V 3ø 4W
- TRANSFORMER 480V-120/240V
- PANEL 120/240V 1ø 3W
- CONTROL PANEL
- EYS SEALS, CLASS 1 DIVISION 1
- $ ELECTRICAL SWITCH
- 120V GFCI RECEPTACLE
- 120V GFCI QUADRUPLEX RECEPTACLE
- ELECTRICAL AND COMMUNICATION PULL BOXES
- NEW PULL BOX
- NON FUSED NEMA 4X DISCONNECT
- UNDERGROUND ELECTRICAL CONDUIT
- ABOVE GROUND ELECTRICAL CONDUIT
- FLEXIBLE METALLIC CONDUIT
- GROUNDING ELECTRODE CONDUCTOR
- GROUND ROD WITH INSPECTION WELL. INSPECTION WELL IS ONLY FOR THE FIRST GROUND ROD CONNECTED TO THE GROUNDING ELECTRODE CONDUCTOR.

GRAPHIC SCALE
2 1 0 1 2 4
1 INCH = 2 FEET
NORTH

WRIGHT engineering corporation
ELECTRICAL ENGINEERING AND DESIGN
165 EAST CHILTON DRIVE
CHANDLER, ARIZONA 85225
PHONE: 480.497.5829
FAX: 480.497.5807
www.wrightengineering.us
Wright Project # 23319

CALL TWO WORKING DAYS BEFORE YOU DIG
602-263-1100
1-800-STAKE-IT
(OUTSIDE MARICOPA COUNTY)

ISSUED FOR BID

NO	BY	DATE	REVISIONS	DATE	APP.

Registered Professional Engineer (Electrical) Certificate No. 73954 JAMES BELLEVUE WRIGHT Date Signed 11-24-25 Expires 9-30-27

PREPARED BY: WRIGHT ENGINEERING
DESIGNED BY: JHB
DRAWN BY: XAG
CHECKED BY: JHB
DATE: NOV 2025
JOB NO.: B614
SCALE: AS NOTED

THESE DRAWINGS ARE THE PROPERTY OF P.A.C.E. AND SHALL NOT BE REPRODUCED IN ANY MANNER NOR BE USED FOR CONSTRUCTION UNLESS STAMPED "ISSUED FOR CONSTRUCTION".

TITLE: ELECTRICAL DEWATERING PAD

JOB: TOWN OF JEROME WASTEWATER TREATMENT PLANT YAVAPAI CO. AZ

PREPARED BY:
PACE
Advanced Water Engineering
8723 E. Via de Commercio, Suite 104 | Scottsdale, CA 85258
P: (480) 991-3395 | www.pacewater.com

SHEET
E3.3
80 OF 99 SHEETS

JOB NO. B614

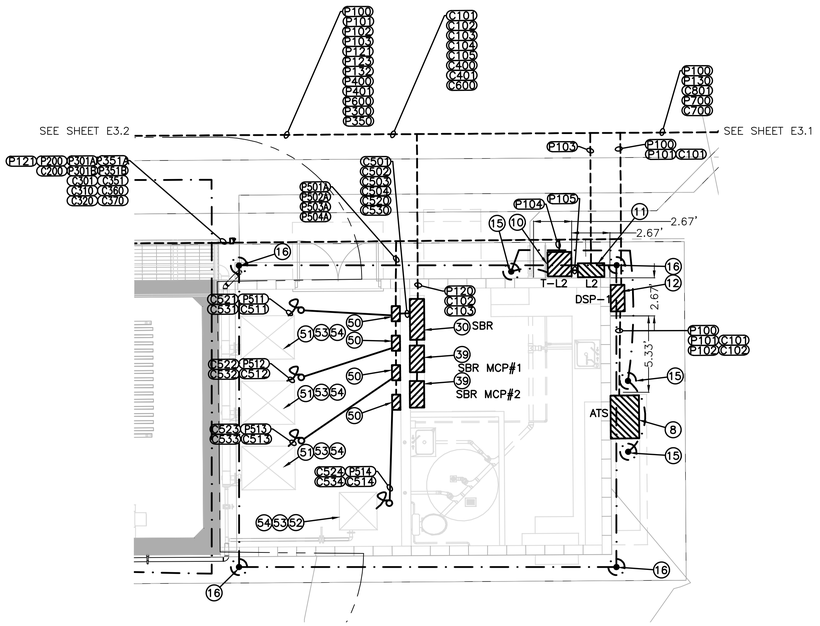

OPS BLOWER ELECTRICAL

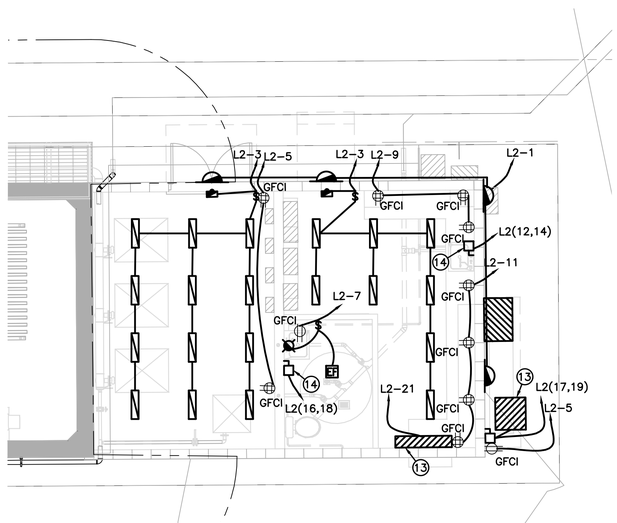

OPS BLOWER LIGHTING & POWER

CONSTRUCTION NOTES

8. ATS 400A 277/480V, 3ø, 4W, SEE DETAIL 2 ON SHEET E4.1.
10. TRANSFORMER 50KVA 480V – 120/240V 1ø, SEE DETAIL 2 ON SHEET E4.1.
11. PANELBOARD, 120/240V, 1ø, 3W, SEE DETAIL 2 ON E4.1.
12. DISTRIBUTION PANEL DSP-1 400A 277/480V, 3ø, 4W, SEE DETAIL 2 ON SHEET E4.1.
13. ELECTRICAL CONTRACTOR SHALL INSTALL POWER FEED TO MINI SPLIT AIR CONDITIONER AND HEAT PUMP & MAKE ALL 240V CONNECTIONS.
14. TANKLESS WATER HEATER & DISCONENCT. ELECTRICAL CONTRACTOR SHALL MAKE ALL POWER AND CONTROL CONNECTIONS PER THESE PLANS AND SPECIFICATIONS AND THE MANUFACTURERS REQUIREMENTS.
15. GROUNDING ELECTRODE CONDUCTORS, GROUND ROD, AND INSPECTION WELL FOR ONLY THE FIRST GROUND ROD, PER SINGLE LINE DIAGRAMS AND DETAILS ON SHEET E4.6.
16. LIGHTNING PROTECTION SYSTEM, PER NFPA AND DETAIL 6 ON SHEET E4.6
30. SBR PANEL BY VENDOR, ELECTRICAL CONTRACTOR SHALL MAKE ALL POWER AND CONTROL CONNECTIONS PER THESE PLANS AND SPECIFICATIONS AND THE MANUFACTURERS REQUIREMENTS.
50. VARIABLE FREQUENCY DRIVE. ELECTRICAL CONTRACTOR SHALL MAKE ALL POWER AND CONTROL CONNECTIONS PER THESE PLANS AND SPECIFICATIONS AND THE MANUFACTURERS REQUIREMENTS.
51. SBR AERATION BLOWER WITH INTEGRAL DISCONNECT. ELECTRICAL CONTRACTOR SHALL MAKE ALL POWER AND CONTROL CONNECTIONS PER THESE PLANS AND SPECIFICATIONS AND THE MANUFACTURERS REQUIREMENTS.
52. DIGESTER AERATION BLOWER WITH INTEGRAL DISCONNECT. ELECTRICAL CONTRACTOR SHALL MAKE ALL POWER AND CONTROL CONNECTIONS PER THESE PLANS AND SPECIFICATIONS AND THE MANUFACTURERS REQUIREMENTS.
53. PRESSURE TRANSDUCER. ELECTRICAL CONTRACTOR SHALL MAKE ALL POWER AND CONTROL CONNECTIONS PER THESE PLANS AND SPECIFICATIONS AND THE MANUFACTURERS REQUIREMENTS.
54. TEMPERATURE TRANSDUCER. ELECTRICAL CONTRACTOR SHALL MAKE ALL POWER AND CONTROL CONNECTIONS PER THESE PLANS AND SPECIFICATIONS AND THE MANUFACTURERS REQUIREMENTS.

LEGEND

- PROPOSED 3ø POWER COMPANY TRANSFORMER
- SES 400A 277/480V 3ø 4W
- TRANSFORMER 480V–120/240V
- PANEL 120/240V 1ø 3W
- CONTROL PANEL
- EYS SEALS, CLASS 1 DIVISION 1
- ELECTRICAL SWITCH
- 120V GFCI RECEPTACLE
- 120V GFCI QUADRUPLEX RECEPTACLE
- ELECTRICAL AND COMMUNICATION PULL BOXES
- NEW PULL BOX
- NON FUSED NEMA 4X DISCONNECT
- UNDERGROUND ELECTRICAL CONDUIT
- ABOVE GROUND ELECTRICAL CONDUIT
- FLEXIBLE METALLIC CONDUIT
- GROUNDING ELECTRODE CONDUCTOR
- GROUND ROD WITH INSPECTION WELL. INSPECTION WELL IS ONLY FOR THE FIRST GROUND ROD CONNECTED TO

GRAPHIC SCALE
5 2.5 0 2.5 5 10
1 INCH = 5 FEET
NORTH

WRIGHT engineering corporation
ELECTRICAL ENGINEERING AND DESIGN
165 EAST CHILTON DRIVE
CHANDLER, ARIZONA 85225
PHONE: 480.497.5829
FAX: 480.497.5807
www.wrightengineering.us
Wright Project # 23319

CALL TWO WORKING DAYS BEFORE YOU DIG
602-263-1100
1-800-STAKE-IT
(OUTSIDE MARICOPA COUNTY)

NO	BY	DATE	REVISIONS	DATE	APP.
1					
2					
3					
4					
5					

Registered Professional Engineer (Electrical) Certificate No. 73954 JAMES RELLETT DAY Date Signed 11-24-25 Expires 9-30-27

PREPARED BY: WRIGHT ENGINEERING
DESIGNED BY: JHB
DRAWN BY: XAG
CHECKED BY: JHB
DATE: NOV 2025
JOB NO.: B614
SCALE: AS NOTED

THESE DRAWINGS ARE THE PROPERTY OF P.A.C.E. AND SHALL NOT BE REPRODUCED IN ANY MANNER NOR BE USED FOR CONSTRUCTION UNLESS STAMPED "ISSUED FOR CONSTRUCTION".

TITLE: ELECTRICAL BLOWER OPS

JOB: TOWN OF JEROME WASTEWATER TREATMENT PLANT YAVAPAI CO. AZ

ISSUED FOR BID

PREPARED BY:
PACE
Advanced Water Engineering
8723 E VIA de VENTURA, SUITE A200, SCOTTSDALE, CA 85258
P: (480) 991-3955 | www.pacewater.com

SHEET
E3.4
81 OF 99 SHEETS

JOB NO. B614

C:\2025\01b_Jerome WWTP\2025 E.dwg, Tab: E3.4, by jacob on 11/24/25 at 08:43 PM

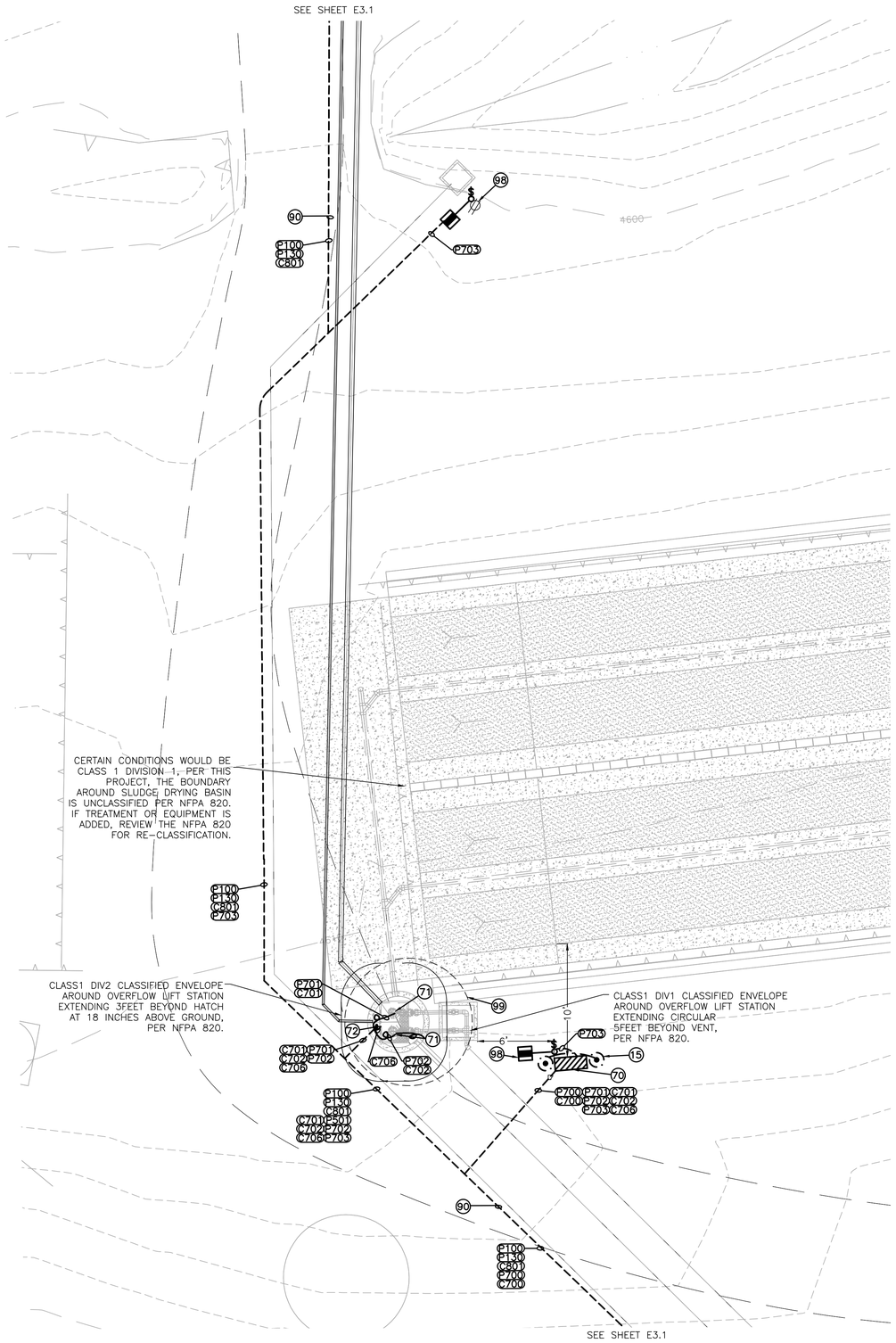

DRYING BED LIFT STATION ELECTRICAL

CONSTRUCTION NOTES

(15) GROUNDING ELECTRODE CONDUCTORS, GROUND ROD, AND INSPECTION WELL FOR ONLY THE FIRST GROUND ROD. PER SINGLE LINE DIAGRAMS AND DETAILS ON SHEET E4.6.

(70) 30A DRYING BED LIFT PUMP CONTROL PANEL, 480V, 3ø, 4W. ELECTRICAL CONTRACTOR SHALL MAKE ALL POWER AND CONTROL CONNECTIONS PER THESE PLANS AND SPECIFICATIONS AND THE MANUFACTURERS REQUIREMENTS. SEE DETAIL 1 ON SHEET E4.4.

(71) DRYING BED LIFT PUMP. ELECTRICAL CONTRACTOR SHALL MAKE ALL POWER AND CONTROL CONNECTIONS PER THESE PLANS AND SPECIFICATIONS AND THE MANUFACTURERS REQUIREMENTS. SEE DETAIL 4 ON SHEET E4.5.

(72) LEVEL FLOAT. ELECTRICAL CONTRACTOR SHALL MAKE ALL POWER AND CONTROL CONNECTIONS PER THESE PLANS AND SPECIFICATIONS AND THE MANUFACTURERS REQUIREMENTS. SEE DETAIL 4 ON SHEET E4.5.

(90) JOINT TRENCH WITH WATER LINES. MAINTAIN 24-INCH SEPARATION. SEE DETAIL 3 ON SHEET E4.3.

(98) 20A 120V GFCI DUPLEX RECEPTACLE WITH METAL WEATHERPROOF WHILE-IN-USE AND LOCKABLE COVER INSTALLED ONTO LIGHT POLE. SEE DETAIL 2 ON SHEET E4.5.

(99) CLASSIFIED AREA VERIFY BOUNDARY WITH THE NFPA. INSTALL ANY PANELS, DISCONNECTS, SPLICES, ARC MAKING EQUIPMENT OUT OF THE BOUNDARY, WHERE NOT POSSIBLE THEN INSTALL CLASS 1 DIV 1 LISTED EQUIPMENT. ALL CONDUIT WITHIN BOUNDARY SHALL BE CLASS 1 DIV 1 OR 2 RATED AS REQUIRED BY THE BOUNDARY. USE PVC COATED THREADED RMC CONDUIT, INSTALL STAINLESS STEEL 316 ENCLOSURES, HARDWARE AND EQUIPMENT WITHIN 10 FEET OF THE BOUNDARY. INSTALL CLASSIFIED SEAL OFFS WITHIN 10 FEET OF THE BOUNDARY, AT A PANEL OR JUNCTION BOX IS PREFERRED.

LEGEND

- PROPOSED 3ø POWER COMPANY TRANSFORMER
- SES 400A 277/480V 3ø 4W
- TRANSFORMER 480V-120/240V
- PANEL 120/240V 1ø 3W
- CONTROL PANEL
- EYS SEALS, CLASS 1 DIVISION 1
- ELECTRICAL SWITCH
- 120V GFCI RECEPTACLE
- 120V GFCI QUADRUPLEX RECEPTACLE
- ELECTRICAL AND COMMUNICATION PULL BOXES
- NEW PULL BOX
- NON FUSED NEMA 4X DISCONNECT
- UNDERGROUND ELECTRICAL CONDUIT
- ABOVE GROUND ELECTRICAL CONDUIT
- FLEXIBLE METALLIC CONDUIT
- GROUNDING ELECTRODE CONDUCTOR
- GROUND ROD WITH INSPECTION WELL. INSPECTION WELL IS ONLY FOR THE FIRST GROUND ROD CONNECTED TO

GRAPHIC SCALE
5 2.5 0 2.5 5 10
1 INCH = 5 FEET
NORTH

WRIGHT engineering corporation
ELECTRICAL ENGINEERING AND DESIGN
165 EAST CHILTON DRIVE
CHANDLER, ARIZONA 85225
PHONE: 480.497.5829
FAX: 480.497.5807
www.wrightengineering.us
Wright Project # 23319

CALL TWO WORKING DAYS BEFORE YOU DIG
602-263-1100
1-800-STAKE-IT
(OUTSIDE MARICOPA COUNTY)

NO	BY	DATE	REVISIONS	DATE	APP.

Registered Professional Engineer (Retired)
Certificate No. 73954
JASON BILLEDEAUX
Date Signed 9-30-27
Expires 9-30-27

PREPARED BY: WRIGHT ENGINEERING
DESIGNED BY: JHB
DRAWN BY: XAG
CHECKED BY: JHB
DATE: NOV 2025
JOB NO.: B614
SCALE: AS NOTED

THESE DRAWINGS ARE THE PROPERTY OF P.A.C.E. AND SHALL NOT BE REPRODUCED IN ANY MANNER NOR BE USED FOR CONSTRUCTION UNLESS STAMPED "ISSUED FOR CONSTRUCTION".

TITLE: ELECTRICAL
DRYING BED LIFT STATION

JOB: TOWN OF JEROME
WASTEWATER
TREATMENT PLANT
YAVAPAI CO. AZ

ISSUED FOR BID

PREPARED BY:
PACE
Advanced Water Engineering
8723 E. Via de Commercio, Suite 1-144, Scottsdale, CA 85258
P: (480) 991-3595 | www.pacewater.com

SHEET
E3.5
82 OF 99 SHEETS

JOB NO. B614

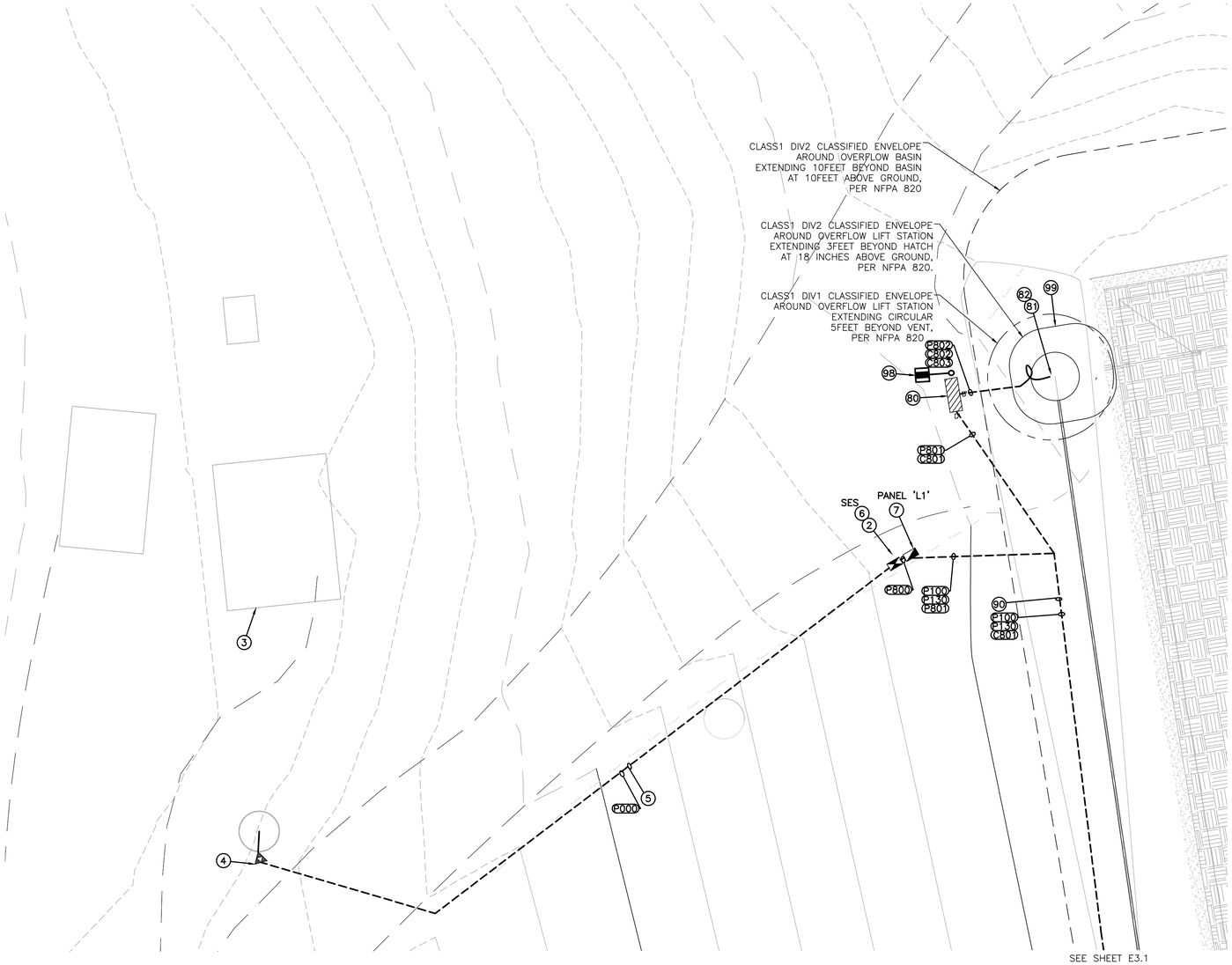

CONSTRUCTION NOTES

(2) REMOVE EXISTING SES AND PANEL AND DISPOSE OF PROPERLY. COORDINATE DISCONNECTION OF THE METER AND SECONDARY CONDUCTORS WITH APS

(3) DE-ENERGIZE EXISTING LAB BUILDING UPON COMPLETION OF CONSTRUCTION OF THE NEW LAB. REMOVE ALL EXISTING CONDUCTORS AND ELECTRICAL EQUIPMENT AND DISPOSE OF PROPERLY. COORDINATE ALL WORK WITH OWNER AND POWER COMPANY PRIOR TO DE-ENERGIZATION.

(4) COORDINATE WITH APS TO REPLACE THE EXISTING POLE MOUNTED SINGLE PHASE TRANSFORMER. APS TO INSTALL THREE PHASE TRANSFORMERS. CONTRACTOR SHALL VERIFY LOCATION OF NEW TRANSFORMER WITH APS. APS PLANS WILL DETERMINE EXACT LOCATION AND TAKE PRECEDENCE OVER THESE DRAWINGS. COORDINATE ALL WORK WITH APS.

(5) APS SERVICE LINE. TRENCH AND INSTALL CONDUIT PER APS SPECIFICATIONS. POWER COMPANY PLANS WILL DETERMINE EXACT LOCATION OF CONDUIT AND TAKE PRECEDENCE OVER THESE DRAWINGS.

(6) SES, 400 AMP, 277/480V, 3ø, 4W, SEE DETAIL 1 ON E4.1.

(80) OVERFLOW LIFT PUMP CONTROL PANEL, BY VENDOR. 240V, 1ø, 3W. ELECTRICAL CONTRACTOR SHALL MAKE ALL POWER AND CONTROL CONNECTIONS PER THESE PLANS AND SPECIFICATIONS AND THE MANUFACTURERS REQUIREMENTS. SEE DETAIL 1 ON SHEET E4.4.

(81) OVERFLOW LIFT PUMP. ELECTRICAL CONTRACTOR SHALL MAKE ALL POWER AND CONTROL CONNECTIONS PER THESE PLANS AND SPECIFICATIONS AND THE MANUFACTURERS REQUIREMENTS. SEE DETAIL 4 ON SHEET E4.5.

(82) LEVEL FLOAT. ELECTRICAL CONTRACTOR SHALL MAKE ALL POWER AND CONTROL CONNECTIONS PER THESE PLANS AND SPECIFICATIONS AND THE MANUFACTURERS REQUIREMENTS. SEE DETAIL 4 ON SHEET E4.5.

(90) JOINT TRENCH WITH WATER LINES. MAINTAIN 24-INCH SEPARATION. SEE DETAIL 3 ON SHEET E4.3.

(98) 20A 120V GFCI DUPLEX RECEPTACLE WITH METAL WEATHERPROOF WHILE-IN-USE AND LOCKABLE COVER INSTALLED ONTO LIGHT POLE. SEE DETAIL 2 ON SHEET E4.5.

LEGEND

- PROPOSED 3ø POWER COMPANY TRANSFORMER
- SES 400A 277/480V 3ø 4W
- TRANSFORMER 480V-120/240V
- PANEL 120/240V 1ø 3W
- CONTROL PANEL
- EYS SEALS, CLASS 1 DIVISION 1
- ELECTRICAL SWITCH
- 120V GFCI RECEPTACLE
- 120V GFCI QUADRUPLEX RECEPTACLE
- ELECTRICAL AND COMMUNICATION PULL BOXES
- NEW PULL BOX
- NON FUSED NEMA 4X DISCONNECT
- UNDERGROUND ELECTRICAL CONDUIT
- ABOVE GROUND ELECTRICAL CONDUIT
- FLEXIBLE METALLIC CONDUIT
- GROUNDING ELECTRODE CONDUCTOR
- GROUND ROD WITH INSPECTION WELL. INSPECTION WELL IS ONLY FOR THE FIRST GROUND ROD CONNECTED TO

ELECTRICAL SITE PLAN - SES & OVERFLOW PUMP STATION

GRAPHIC SCALE
5 2.5 0 2.5 5 10
1 INCH = 5 FEET
NORTH

WRIGHT engineering corporation
ELECTRICAL ENGINEERING AND DESIGN
165 EAST CHILTON DRIVE
CHANDLER, ARIZONA 85225
PHONE: 480.497.5829
FAX: 480.497.5807
www.wrightengineering.us
Wright Project # 23319

CALL TWO WORKING DAYS BEFORE YOU DIG
602-263-1100
1-800-STAKE-IT
(OUTSIDE MARICOPA COUNTY)

NO	BY	DATE	REVISIONS	DATE	APP.

Registered Professional Engineer (Electrical) Certificate No. 73954 JAMES BRADLEY WRIGHT Expires 9-30-27

PREPARED BY: WRIGHT ENGINEERING
DESIGNED BY: JHB
DRAWN BY: XAG
CHECKED BY: JHB
DATE: NOV 2025
JOB NO.: B614
SCALE: AS NOTED

TITLE: ELECTRICAL OVERFLOW BASIN

JOB: TOWN OF JEROME WASTEWATER TREATMENT PLANT
YAVAPAI CO. AZ

PREPARED BY:
PACE
Advanced Water Engineering
8723 E. VIA de VENTURA, SUITE A-200, SCOTTSDALE, CA 85258
P: (480) 991-3595 | www.pacewater.com

ISSUED FOR BID

SHEET
E3.6
83 OF 99 SHEETS

JOB NO. B614

THESE DRAWINGS ARE THE PROPERTY OF P.A.C.E. AND SHALL NOT BE REPRODUCED IN ANY MANNER NOR BE USED FOR CONSTRUCTION UNLESS STAMPED "ISSUED FOR CONSTRUCTION".

K:\2025\25-pw\wwtp\25105.dwg Tab: E3.6 by pwade on 11/05/25 at 8:45:41 PM

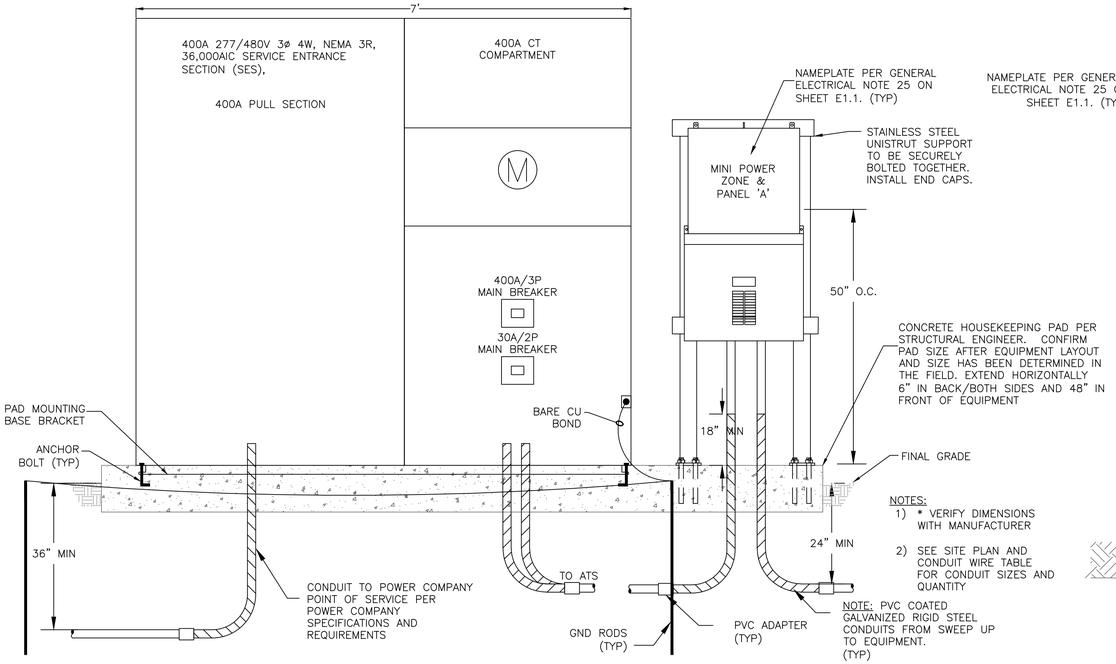

1 SES ELEVATION DETAIL

NO SCALE

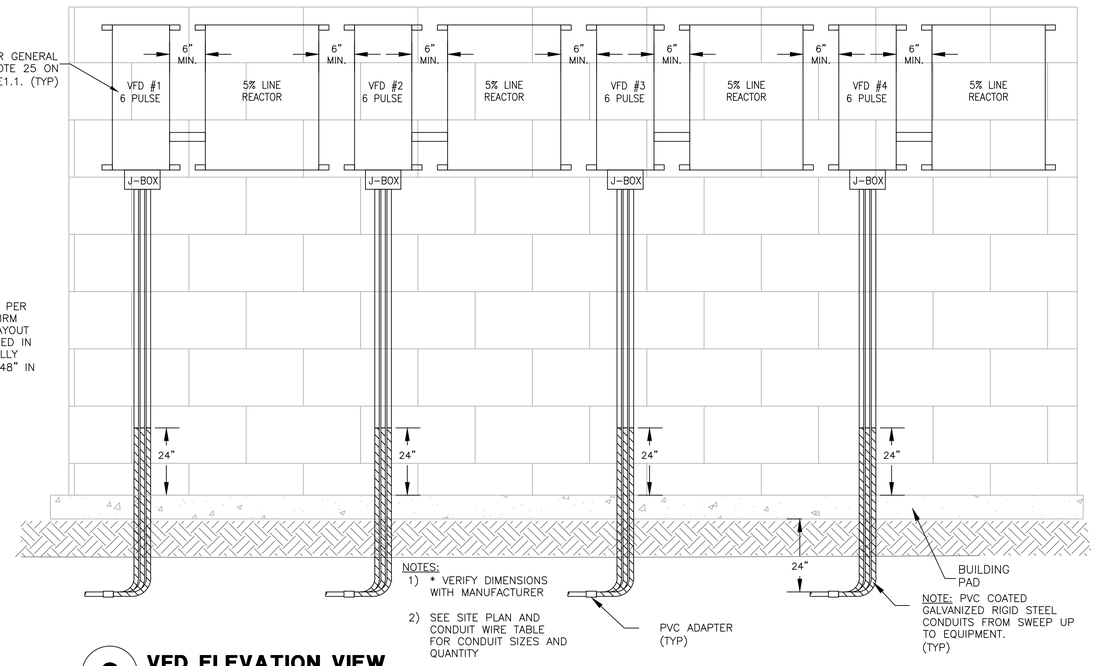

3 VFD ELEVATION VIEW

NOT TO SCALE

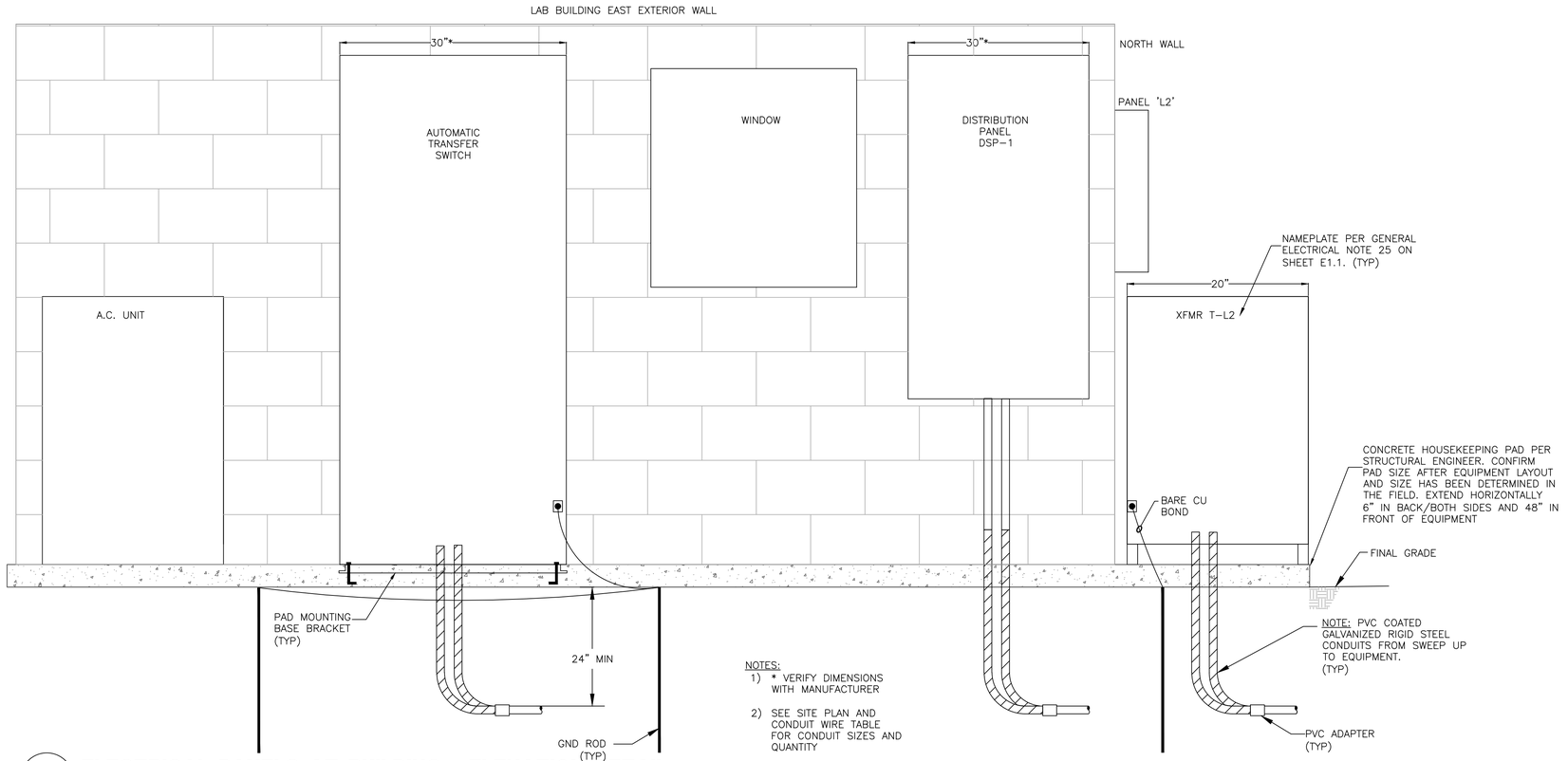

2 ELECTRICAL PANELS AT BUILDING - ELEVATION DETAIL

NO SCALE

WRIGHT engineering corporation
ELECTRICAL ENGINEERING AND DESIGN
165 EAST CHILTON DRIVE
CHANDLER, ARIZONA 85225
PHONE: 480.497.5829
FAX: 480.497.5807
www.wrightengineering.us
Wright Project # 23319

CALL TWO WORKING DAYS BEFORE YOU DIG
602-263-1100
1-800-STAKE-IT
(OUTSIDE MARICOPA COUNTY)

NO	BY	DATE	REVISIONS	DATE	APP.

Registered Professional Engineer (Electrical) Certificate No. 73954 JASON BILLEDT Date Signed 9-30-25 Expires 9-30-27

PREPARED BY: WRIGHT ENGINEERING
DESIGNED BY: JHB
DRAWN BY: XAG
CHECKED BY: JHB
SCALE: AS NOTED
DATE: NOV 2025
JOB NO. B614

THESE DRAWINGS ARE THE PROPERTY OF P.A.C.E. AND SHALL NOT BE REPRODUCED IN ANY MANNER NOR BE USED FOR CONSTRUCTION UNLESS STAMPED "ISSUED FOR CONSTRUCTION".

TITLE: ELECTRICAL DETAILS I

JOB: TOWN OF JEROME WASTEWATER TREATMENT PLANT
YAVAPAI CO. AZ

ISSUED FOR BID

PREPARED BY: PACE
Advanced Water Engineering
8723 E. Via de Commercio, Suite 1, Scottsdale, CA 85258
P: (480) 991-3595 | www.pacewater.com

SHEET E4.1
84 OF 99 SHEETS

JOB NO. B614

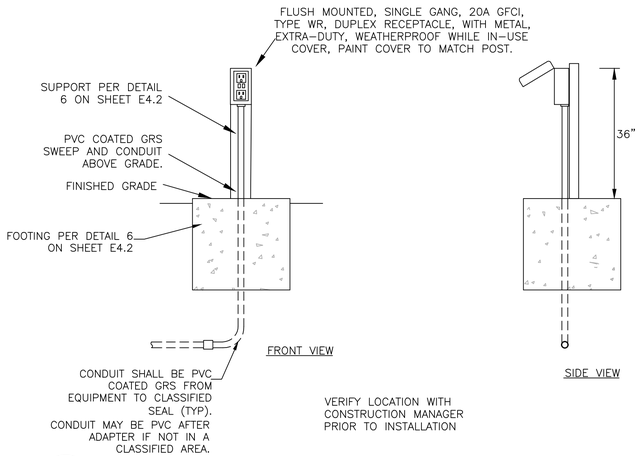

1 RECEPTACLE PEDESTAL DETAIL

NO SCALE

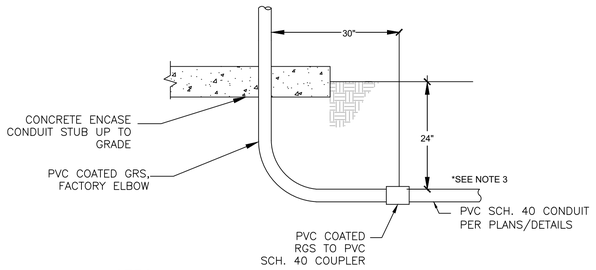

NOTES:
1. ALL DIMENSIONS SHOWN ARE MINIMUM.
2. PROVIDE 6 INCH COVER OF CONCRETE WITHIN 2 FEET OF ALL DRIVABLE AREAS PER DETAILS AND PLAN.
3. CONDUITS THROUGH CLASSIFIED AREA SHALL BE PVC COATED RGS UNDERGROUND

2 TYPICAL CONDUIT STUB UP DETAIL

NO SCALE

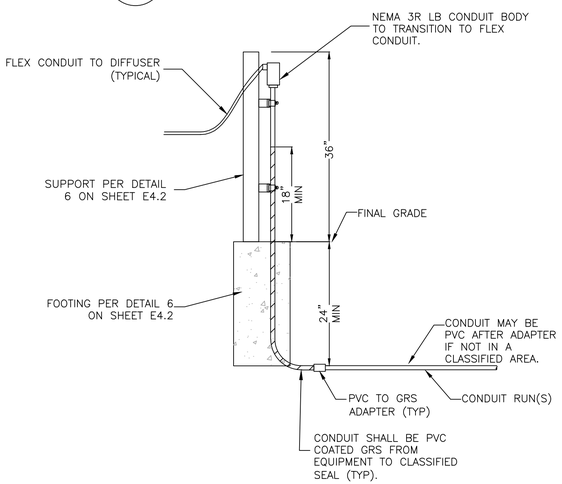

3 CONDUIT TO EQUIPMENT SUPPORT DETAIL

NO SCALE

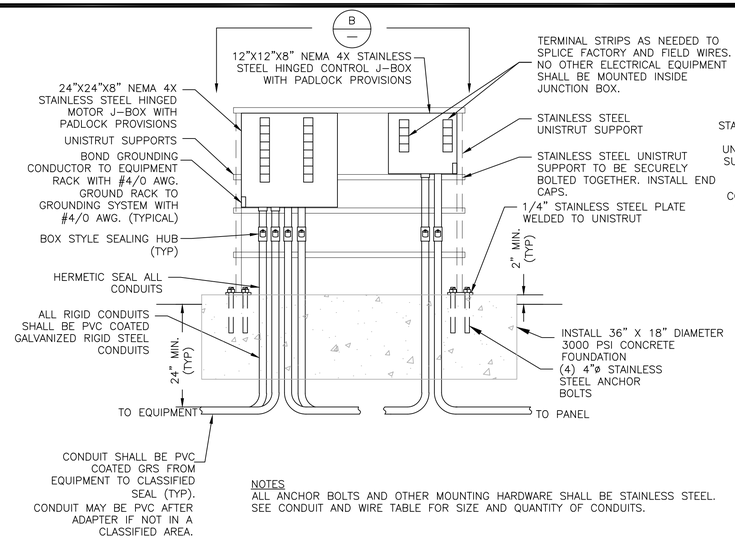

NOTES
ALL ANCHOR BOLTS AND OTHER MOUNTING HARDWARE SHALL BE STAINLESS STEEL.
SEE CONDUIT AND WIRE TABLE FOR SIZE AND QUANTITY OF CONDUITS.

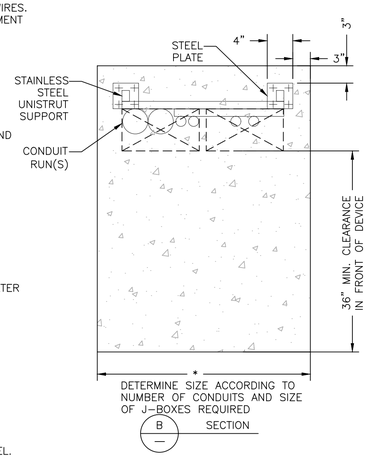

NOTES:
1) A 36" MIN. CLEARANCE SHALL BE MAINTAINED IN FRONT OF ALL ELECTRICAL DEVICES.

2) ALL EXPOSED CONDUITS SHALL BE GALVANIZED RIGID STEEL TO BELOW GRADE PAST 90° BEND TO PVC/GRS ADAPTER UNLESS OTHERWISE NOTED ON PLANS. WRAP PER GENERAL NOTE 11 ON SHEET E1.1.

3) ALL JUNCTION BOXES SHALL BE NEMA-4X STAINLESS STEEL UNLESS OTHERWISE NOTED ON PLANS.

4) ALL BARE STEEL COMPONENTS SHALL BE PRIMED AND PAINTED TAN TO MATCH SURROUNDING EQUIPMENT.

5) SEE RESPECTIVE SITE PLAN FOR CONDUIT SIZE AND QUANTITY DESIGNATIONS.

6)CONTRACTOR SHALL MAINTAIN AN 18" AIR GAP FOR CONDUIT RUN COMING FROM WET WELL. AIR GAP SHALL BE LOCATED AT THE JUNCTION BOX. CONTRACTOR SHALL INSTALL HERMETIC SEALS AT THE END OF THE THE CONDUIT RUNS INTO VAULT WALL TO PREVENT MOISTURE FROM ENTERING CONDUIT. CONDUIT SHALL BE CONTINUOUS GRS FROM WET WELL TO AIR GAP.

4 STANCHION MOUNTED JUNCTION BOX

NO SCALE

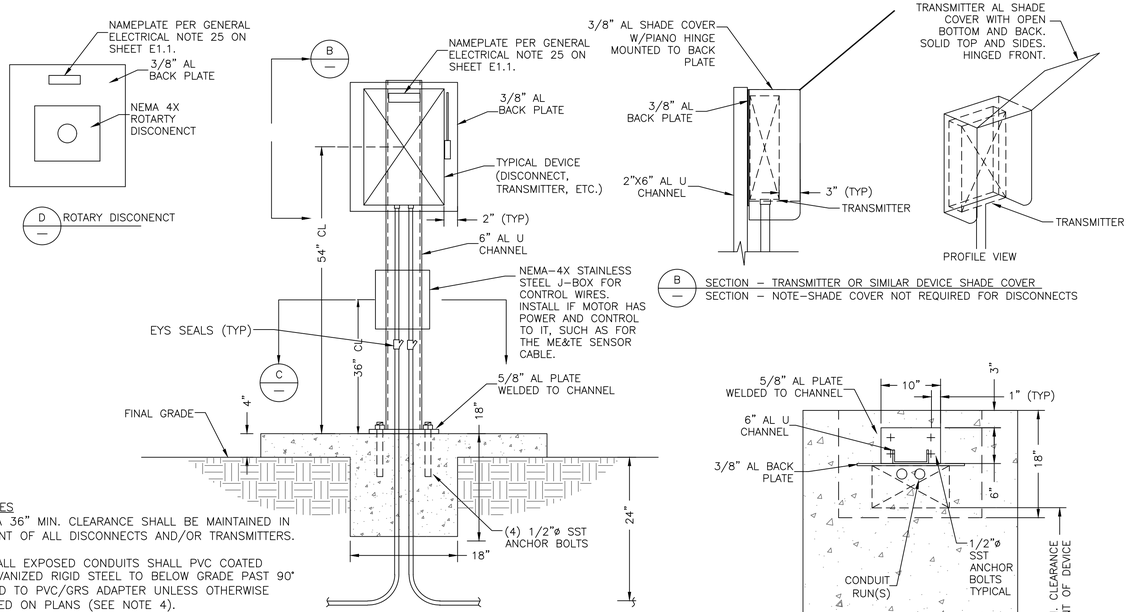

NOTES
1) A 36" MIN. CLEARANCE SHALL BE MAINTAINED IN FRONT OF ALL DISCONNECTS AND/OR TRANSMITTERS.

2) ALL EXPOSED CONDUITS SHALL PVC COATED GALVANIZED RIGID STEEL TO BELOW GRADE PAST 90° BEND TO PVC/GRS ADAPTER UNLESS OTHERWISE NOTED ON PLANS (SEE NOTE 4).

3) ALL DISCONNECTS SHALL BE NEMA-4X STAINLESS STEEL UNLESS OTHERWISE NOTED ON PLANS.

4)CONTRACTOR SHALL MAINTAIN 18" AIR GAP ON CONDUIT RUN COMING FROM WET WELL. AIR GAP SHALL BE LOCATED AT THE JUNCTION BOX. AIR GAP SHALL CONFORM TO THE NATIONAL ELECTRICAL CODE FOR CLASS 1, DIVISION 1 HAZARDOUS AREA. CONTRACTOR SHALL INSTALL HERMETIC SEALS AT THE END OF THE THE CONDUIT RUNS INTO VAULT WALL TO PREVENT MOISTURE FROM ENTERING CONDUIT. CONDUIT SHALL BE CONTINUOUS GRS FROM WET WELL TO 18" AIR GAP.

5 DISCONNECT/CONTROL NEMA 4X J-BOX DETAIL

NO SCALE

NO	BY	DATE	REVISIONS	DATE	APP.

Registered Professional Engineer (Electrical) Certificate No. 73954 JAMES BELLEDIN 04-24-25 Expires 9-30-27

PREPARED BY: WRIGHT ENGINEERING
DESIGNED BY: JHB
DRAWN BY: XAG
CHECKED BY: JHB
SCALE: AS NOTED
DATE: NOV 2025
JOB NO. B614

THESE DRAWINGS ARE THE PROPERTY OF P.A.C.E. AND SHALL NOT BE REPRODUCED IN ANY MANNER NOR BE USED FOR CONSTRUCTION UNLESS STAMPED "ISSUED FOR CONSTRUCTION".

TITLE: ELECTRICAL DETAILS II

JOB: TOWN OF JEROME WASTEWATER TREATMENT PLANT YAVAPAI CO. AZ

ISSUED FOR BID

PREPARED BY:
PACE
Advanced Water Engineering
8723 E. Via de Commercio, Suite 1 | SCOTTSDALE, CA 85258
P: (480) 991-3955 | www.pacewater.com

SHEET E4.2
85 OF 99 SHEETS

JOB NO. B614

WRIGHT engineering corporation
ELECTRICAL ENGINEERING AND DESIGN
165 EAST CHILTON DRIVE
CHANDLER, ARIZONA 85225
PHONE: 480.497.5829
FAX: 480.497.5807
www.wrightengineering.us
Wright Project # 23319

CALL TWO WORKING DAYS BEFORE YOU DIG
602-263-1100
1-800-STAKE-IT
(OUTSIDE MARICOPA COUNTY)

C:\2025\25-Jerome WWTP\25-TSE-E4.2.dwg, Tab: E4.2, by jacob on 11/24/25 at 3:56:33 PM

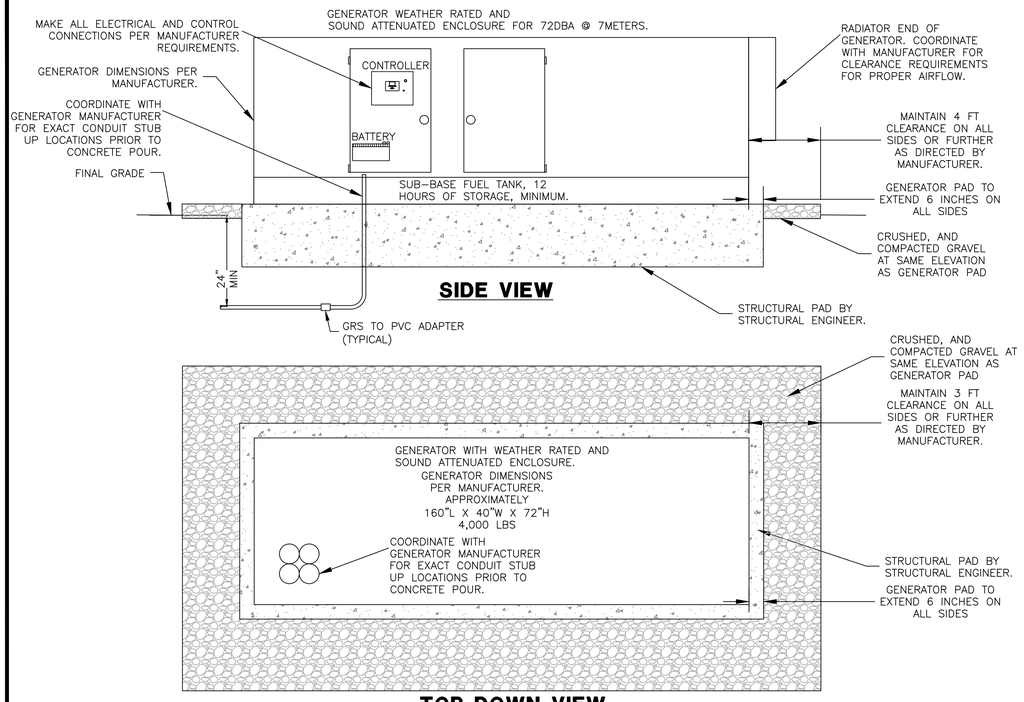

1 GENERATOR INSTALLATION DETAIL

NO SCALE

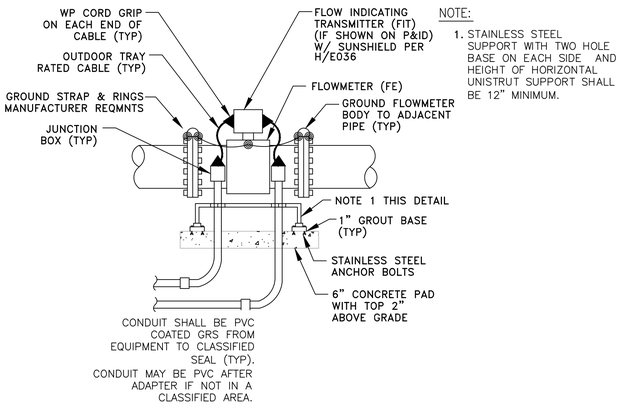

NOTE:

1. STAINLESS STEEL SUPPORT WITH TWO HOLE BASE ON EACH SIDE AND HEIGHT OF HORIZONTAL UNISTRUT SUPPORT SHALL BE 12" MINIMUM.

4 FLOWMETER DETAIL

NO SCALE

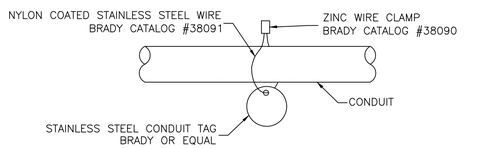

2 CONDUIT TAG DETAIL

NO SCALE

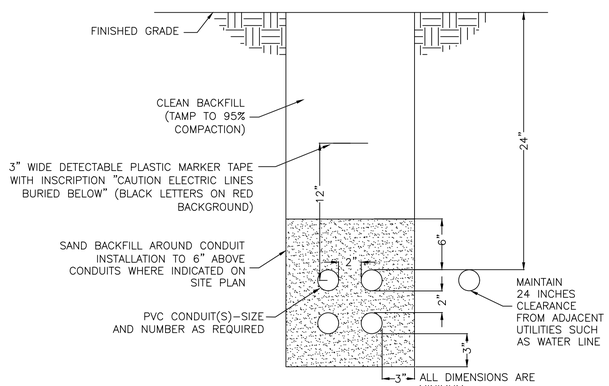

NOTE:

1) THIS CONDUIT DUCT BANK DETAIL SHALL BE REFERENCED FOR ALL UNDER GROUND CONDUIT INSTALLATIONS.

2) INSTALL CONDUIT SPACERS EVERY 6 FT. MAX., CARLON OR EQUAL.

3 CONDUIT DUCT BANK INSTALLATION DETAIL

NO SCALE

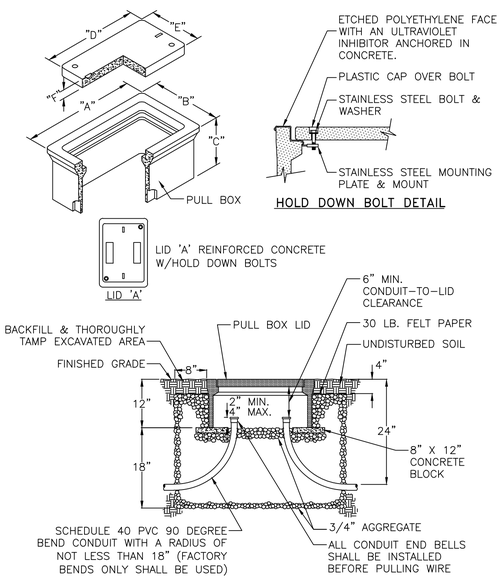

5 PULL BOX INSTALLATION DETAIL

NO SCALE

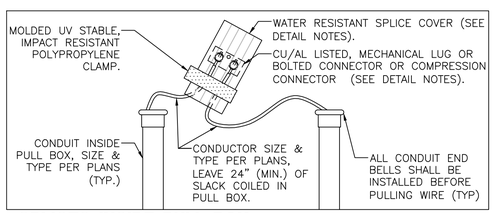

SPLICES INSIDE PULL BOX

DETAIL NOTES:

1. THE PULL BOX SHALL BE MADE OF A HIGH DENSITY REINFORCED CONCRETE MATERIAL WITH END & SIDE KNOCKOUTS, & NON-SETTLING SHOULDERS TO MAINTAIN GRADE, MANUFACTURED WITH APPROXIMATE DIMENSIONS AS SHOWN.
2. STEEL REINFORCEMENT SHALL BE AS REGULARLY USED IN STANDARD PRODUCTS OF THE RESPECTIVE MANUFACTURER.
3. COVER LETTERING SHALL BE 1" LETTERS CAST IN STANDARD MARKINGS: "ELECTRIC" OR "HIGH VOLTAGE" OR "COMMUNICATIONS". AS REQUIRED.
4. THE PULL BOX SHALL HAVE AN ETCHED POLYETHYLENE FACE WITH AN ULTRAVIOLET INHIBITOR ANCHORED IN CONCRETE.
5. ALL CABLE & CONDUCTOR SPLICES MADE USING CU/AL LISTED, MECHANICAL LUG OR BOLTED CONNECTOR OR COMPRESSION CONNECTOR, (TYCO ELECTRONICS, NSI INDUSTRIES, ILSCO OR APPROVED EQUAL). CONNECTION TO BE INSULATED & MADE WATER RESISTANT WITH TYCO ELECTRONICS GELCAP-SL, NSI INDUSTRIES ESSLK-2/0 OR 3M SCOTCHCAST SPLICE KIT 85 SERIES.

DATA TABLE

PULLBOX TYPE	PULLBOX LENGTH	PULLBOX WIDTH	PULLBOX HEIGHT	LID LENGTH	LID WIDTH	LID HEIGHT
	"A"	"B"	"C"	"D"	"E"	"F"
#3-1/2	19-3/4"	14-1/4"	12"	15-1/2"	10"	1-3/4"
#5	25-1/8"	15-5/8"	12"	20-3/4"	10-5/8"	2"
#7	35"	22"	12"	30-1/2"	17-1/2"	2"
#9	40-1/2"	28-1/4"	18"	35-1/2"	24"	3"

WRIGHT engineering corporation
ELECTRICAL ENGINEERING AND DESIGN
165 EAST CHILTON DRIVE
CHANDLER, ARIZONA 85225
PHONE: 480.497.5829
FAX: 480.497.5807
www.wrightengineering.us
Wright Project # 23319

CALL TWO WORKING DAYS BEFORE YOU DIG
602-263-1100
1-800-STAKE-IT
(OUTSIDE MARICOPA COUNTY)

NO	BY	DATE	REVISIONS	DATE	APP.

THESE DRAWINGS ARE THE PROPERTY OF P.A.C.E. AND SHALL NOT BE REPRODUCED IN ANY MANNER NOR BE USED FOR CONSTRUCTION UNLESS STAMPED "ISSUED FOR CONSTRUCTION".

Registered Professional Engineer (Electrical) Certificate No. 73954 JASON BILLEDT Date Signed 9-30-25 Expires 9-30-27

PREPARED BY: WRIGHT ENGINEERING
DESIGNED BY: JHB
DRAWN BY: XAG
CHECKED BY: JHB
DATE: NOV 2025
JOB NO.: B614
SCALE: AS NOTED

TITLE: ELECTRICAL DETAILS III

JOB: TOWN OF JEROME WASTEWATER TREATMENT PLANT YAVAPAI CO. AZ

ISSUED FOR BID

PREPARED BY:
PACE
Advanced Water Engineering
8123 E. VIA DE COMERCIO, BLDG. 3, SUITE 1, SCOTTSDALE, CA 85258
P: (480) 991-3555 | www.pacewater.com

SHEET E4.3
86 OF 99 SHEETS

JOB NO. B614

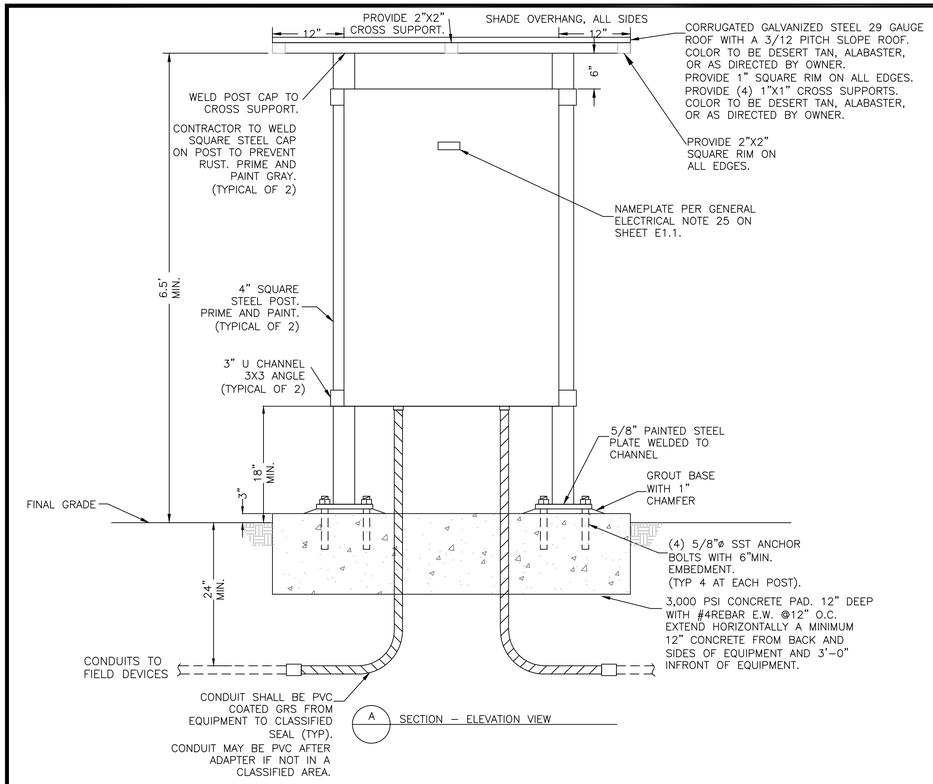

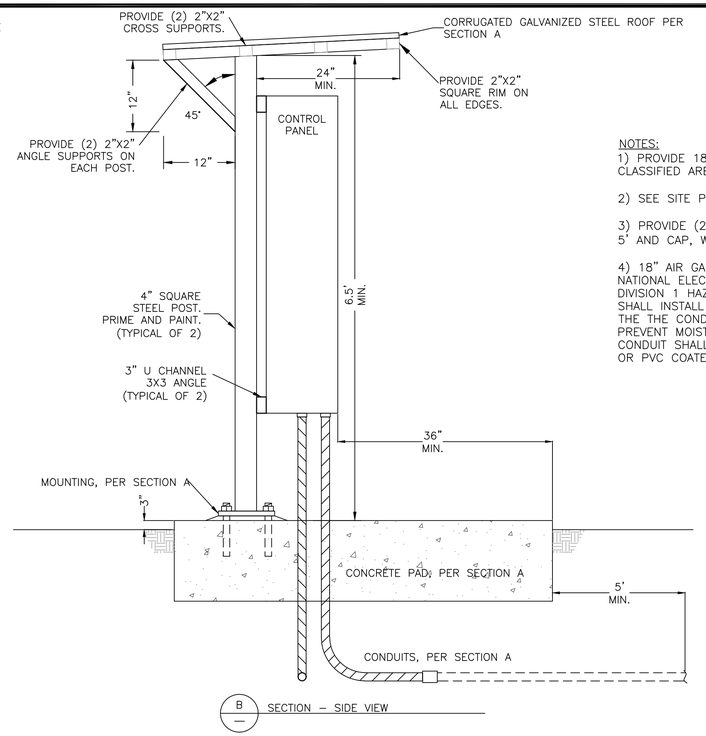

NOTES:
1) PROVIDE 18" AIR GAP WHEN CONDUITS ENTER CLASSIFIED AREAS.

2) SEE SITE PLAN FOR QUANTITY OF CONDUITS.

3) PROVIDE (2) 1.5" SPARE CONDUITS, EXTEND 5' AND CAP, WITH DETECTABLE PULL ROPE.

4) 18" AIR GAP SHALL CONFORM TO THE NATIONAL ELECTRICAL CODE FOR CLASS 1, DIVISION 1 HAZARDOUS AREA. CONTRACTOR SHALL INSTALL HERMETIC SEALS AT THE END OF THE THE CONDUIT RUNS INTO VAULT WALL TO PREVENT MOISTURE FROM ENTERING CONDUIT. CONDUIT SHALL BE CONTINUOUS GRS WRAPPED OR PVC COATED FROM WET WELL TO AIR GAP.

1 FREESTANDING CONTROL PANEL

NO SCALE

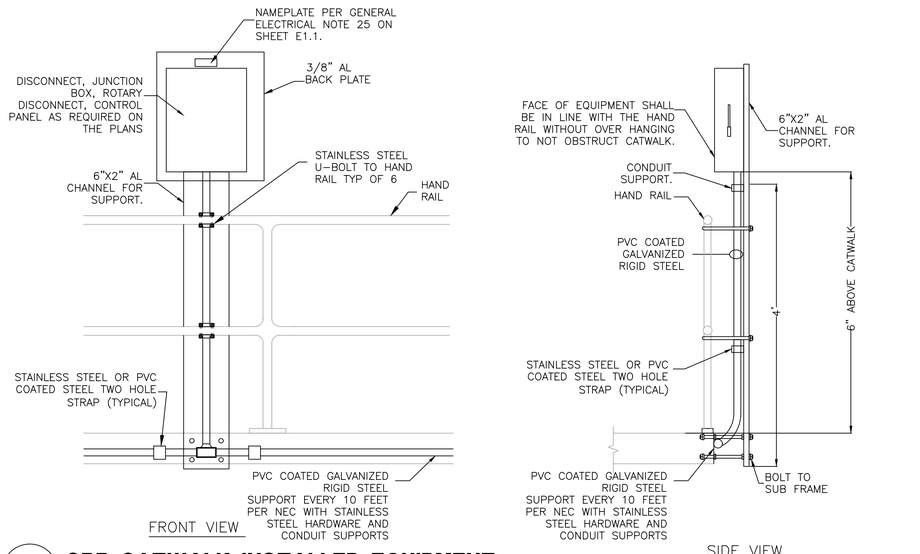

2 SBR CATWALK INSTALLED EQUIPMENT

NO SCALE

NO	BY	DATE	REVISIONS	DATE	APP.

Registered Professional Engineer (Electrical) Certificate No. 73954 JASON BILLETDEAUX Date Signed 9-30-25 Expires 9-30-27

PREPARED BY: WRIGHT ENGINEERING
DESIGNED BY: JHB
DRAWN BY: XAG
CHECKED BY: JHB
SCALE: AS NOTED
DATE: NOV 2025
JOB NO.: B614

TITLE: ELECTRICAL DETAILS IV

JOB: TOWN OF JEROME WASTEWATER TREATMENT PLANT YAVAPAI CO. AZ

THESE DRAWINGS ARE THE PROPERTY OF P.A.C.E. AND SHALL NOT BE REPRODUCED IN ANY MANNER NOR BE USED FOR CONSTRUCTION UNLESS STAMPED "ISSUED FOR CONSTRUCTION".

ISSUED FOR BID

PREPARED BY:
PACE
Advanced Water Engineering
8712 E. Via de Commercio, Suite 3A, Scottsdale, CA 85258
P: (408) 991-3595 | www.pacewater.com

SHEET
E4.4
87 OF 99 SHEETS

JOB NO. B614

WRIGHT engineering corporation
ELECTRICAL ENGINEERING AND DESIGN
165 EAST CHILTON DRIVE
CHANDLER, ARIZONA 85225
PHONE: 480.497.5829
FAX: 480.497.5807
www.wrightengineering.us
Wright Project # 23319

CALL TWO WORKING DAYS BEFORE YOU DIG
602-263-1100
1-800-STAKE-IT
(OUTSIDE MARICOPA COUNTY)

N:\2025\2519-Jerome WWTP\2519-Dwg - Ltr 8 x 14 - by pcabo on 11/04/25 at 10:58 PM

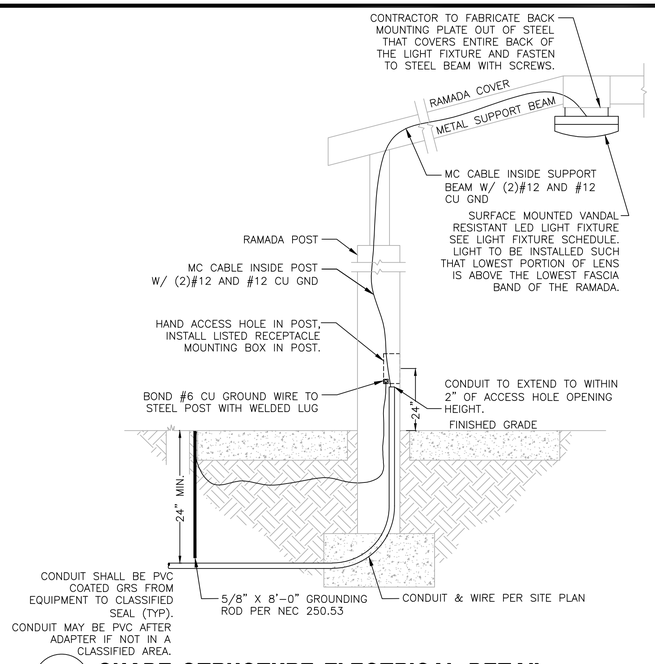

1 SHADE STRUCTURE ELECTRICAL DETAIL

NO SCALE

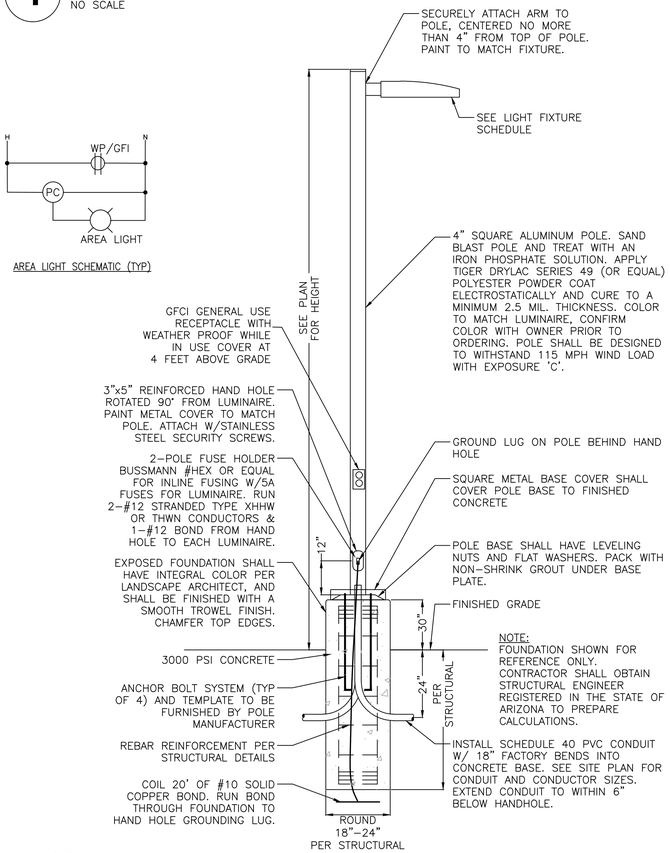

2 AREA LIGHT DETAIL

NO SCALE

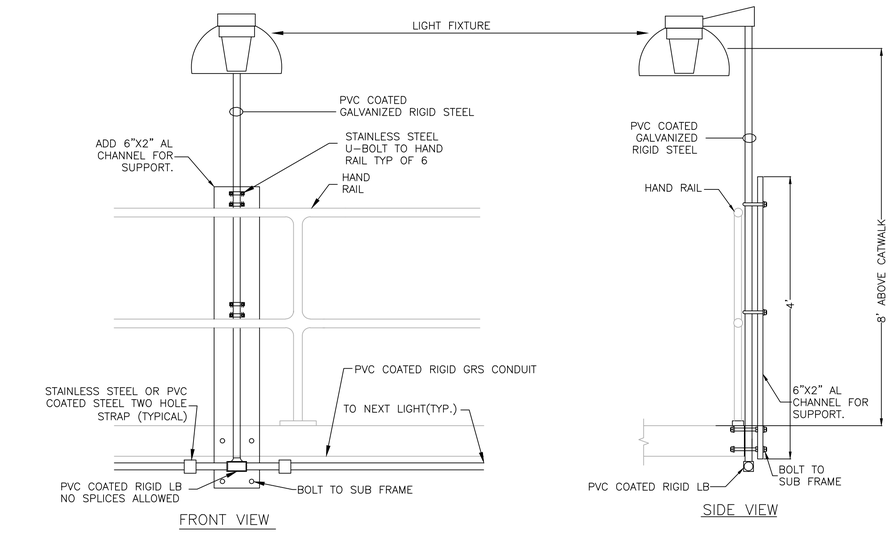

3 SBR LIGHT DETAIL

NO SCALE

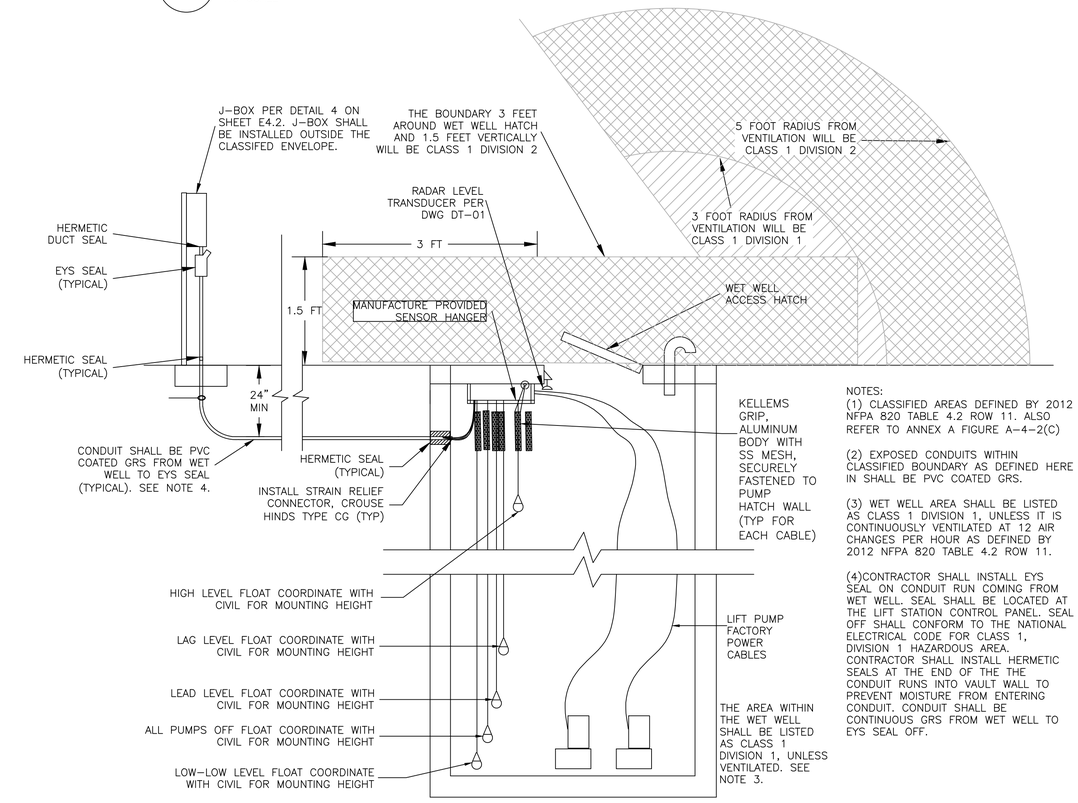

NOTES:
(1) CLASSIFIED AREAS DEFINED BY 2012 NFPA 820 TABLE 4.2 ROW 11. ALSO REFER TO ANNEX A FIGURE A-4-2(C)

(2) EXPOSED CONDUITS WITHIN CLASSIFIED BOUNDARY AS DEFINED HERE IN SHALL BE PVC COATED GRS.

(3) WET WELL AREA SHALL BE LISTED AS CLASS 1 DIVISION 1, UNLESS IT IS CONTINUOUSLY VENTILATED AT 12 AIR CHANGES PER HOUR AS DEFINED BY 2012 NFPA 820 TABLE 4.2 ROW 11.

(4)CONTRACTOR SHALL INSTALL EYS SEAL ON CONDUIT RUN COMING FROM WET WELL. SEAL SHALL BE LOCATED AT THE LIFT STATION CONTROL PANEL. SEAL OFF SHALL CONFORM TO THE NATIONAL ELECTRICAL CODE FOR CLASS 1, DIVISION 1 HAZARDOUS AREA. CONTRACTOR SHALL INSTALL HERMETIC SEALS AT THE END OF THE THE CONDUIT RUNS INTO VAULT WALL TO PREVENT MOISTURE FROM ENTERING CONDUIT. CONDUIT SHALL BE CONTINUOUS GRS FROM WET WELL TO EYS SEAL OFF.

4 LIFT STATION DETAIL

NO SCALE

NOTE
LEVEL CONTROLS SHOWN FOR REFERENCE ONLY, MOUNT LEVEL CONTROLS PER CIVIIL/MECHANICAL DRAWINGS.

WRIGHT engineering corporation
ELECTRICAL ENGINEERING AND DESIGN
165 EAST CHILTON DRIVE
CHANDLER, ARIZONA 85225
PHONE: 480.497.5829
FAX: 480.497.5807
www.wrightengineering.us
Wright Project # 23319

CALL TWO WORKING DAYS BEFORE YOU DIG
602-263-1100
1-800-STAKE-IT
(OUTSIDE MARICOPA COUNTY)

NO	BY	DATE	REVISIONS	DATE	APP.

Registered Professional Engineer (Electrical) Certificate No. 73954 JAMES RILLETT Date Signed 9-30-25 Expires 9-30-27

THESE DRAWINGS ARE THE PROPERTY OF P.A.C.E. AND SHALL NOT BE REPRODUCED IN ANY MANNER NOR BE USED FOR CONSTRUCTION UNLESS STAMPED "ISSUED FOR CONSTRUCTION".

PREPARED BY: WRIGHT ENGINEERING
DESIGNED BY: JHB
DRAWN BY: XAG
CHECKED BY: JHB
DATE: NOV 2025
JOB NO. B614
SCALE: AS NOTED

TITLE: ELECTRICAL DETAILS V

JOB: TOWN OF JEROME WASTEWATER TREATMENT PLANT — YAVAPAI CO. AZ

PREPARED BY:
PACE
Advanced Water Engineering
8723 E. VIA DE COMMERCIO, 1ST FLOOR | SCOTTSDALE, CA 85258
P. (480) 991-3595 | www.pacewater.com

ISSUED FOR BID

SHEET
E4.5
88 OF 99 SHEETS

JOB NO. B614

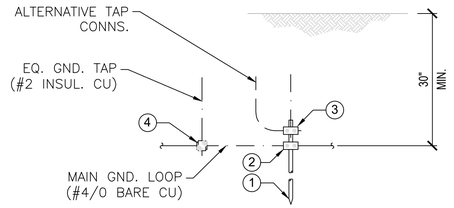

BILL OF MATERIALS		
NO.	DESCRIPTION	QTY
1	GROUND ROD, 3/4" DIA. x 10', COPPER-CLAD STEEL	1
2	GROUND ROD CONNECTOR (5/8"-3/4", 2/0 SOL-250) BURNDY #GAR6429 OR EQUAL.	1
3	GROUND ROD CONNECTOR (5/8"-3/4", #4 SOL-2/0) BURNDY #GAR6426 OR EQUAL.	1
4	GROUND CABLE CONNECTOR (#2/0-250 TO #4-#2/0) BURNDY #GX2926 OR EQUAL.	1

1 GROUND ROD INSTALLATION DETAIL
NO SCALE

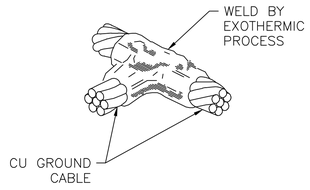

2 GROUND RING CONNECTION DETAIL
NO SCALE

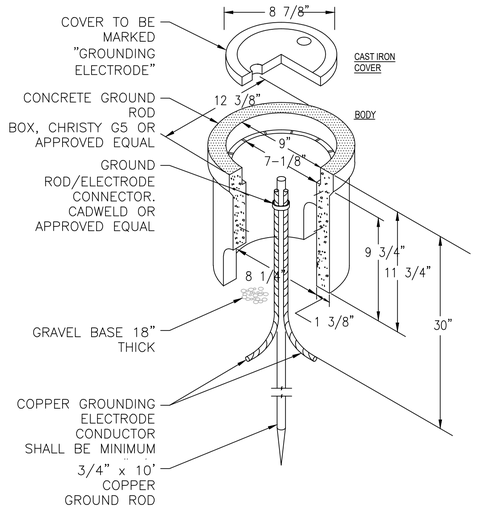

4 CONCRETE GROUND ROD INSPECTION DETAIL
NO SCALE

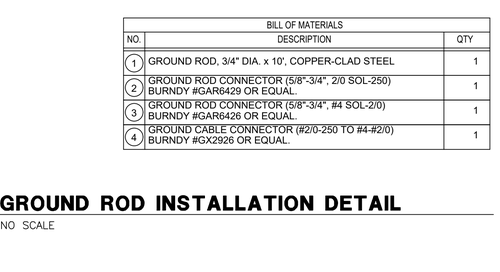

BILL OF MATERIALS		
NO.	DESCRIPTION	QTY
1	#4 RE-BAR, 1/2" DIA. – USE GND. CONN. BURNDY #GAR1126	1
2	#5 OR #6 RE-BAR, 5/8" OR 3/4"DIA. – USE GND. CONN. BURNDY #GAR6426	1
3	#7 OR #8 RE-BAR, 7/8" OR 1"DIA. – USE GND. CONN. BURNDY #GAR1426	1

3 GROUND ROD TO REBAR DETAIL
NO SCALE

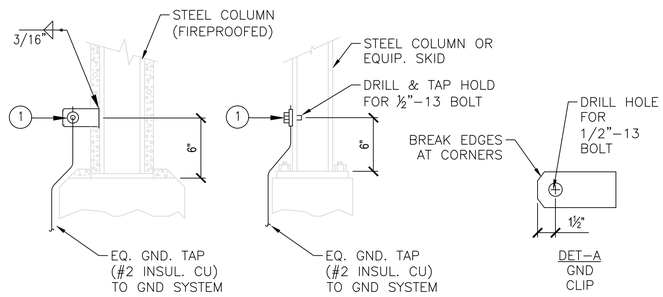

BILL OF MATERIALS		
NO.	DESCRIPTION	QTY
1	SERVIT POST CONNECTOR, 2/C, 1/2"–13 LONG STUD, #2–#2/0 W/ NUT & LOCKWASHER, BURNDY#K2C25B1	1
2	GROUND CLIP, MILD STEEL, 5" x 3" x 1/4" FIELD FABRICATE – SEE DET–A	1

5 GROUNDING CONNECTION - EQUIP/STEEL COLUMN
NO SCALE

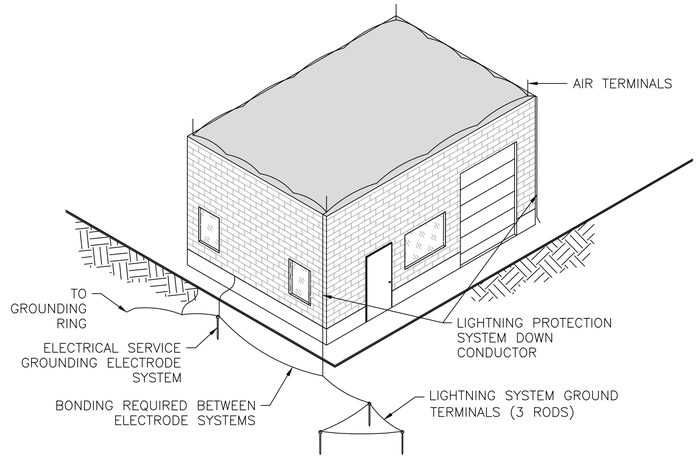

NOTES:
1. THE LIGHTNING ROD IS CONNECTED TO GROUND WITH AT LEAST TWO DOWN CONDUCTORS LOCATED ON OPPOSITE FACADES WHEREVER POSSIBLE.
2. THE DOWN CONDUCTORS MUST BE INSTALLED OUTSIDE THE BUILDING, AVOIDING THE PROXIMITY OF ELECTRICAL CABLES AND GAS. ITS PATH MUST BE AS STRAIGHT AS POSSIBLE, USING THE SHORTEST PATH TO EARTH, AVOIDING ANY SHARP BEND OR LIFT.
3. INSTALL IN ACCORDANCE WITH NFPA 780, NEC 250.60 AND NEC 250.106.
4. DETAIL SHOWN FOR REFERENCE ONLY.

6 LIGHTNING PROTECTION SYSTEM DETAIL
NO SCALE

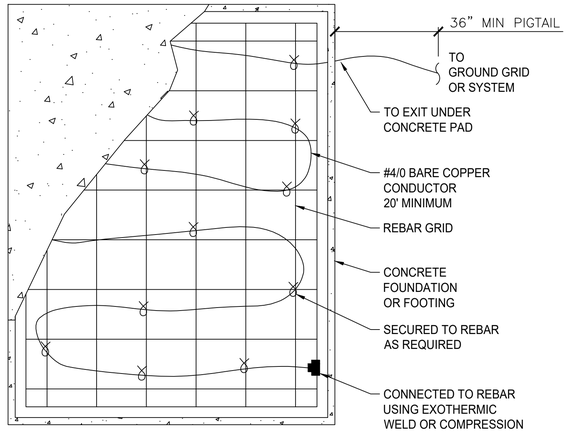

7 CONCRETE GROUNDING DETAIL
NO SCALE

WRIGHT engineering corporation
ELECTRICAL ENGINEERING AND DESIGN
165 EAST CHILTON DRIVE
CHANDLER, ARIZONA 85225
PHONE: 480.497.5829
FAX: 480.497.5807
www.wrightengineering.us
Wright Project # 23319

CALL TWO WORKING DAYS BEFORE YOU DIG
602-263-1100
1-800-STAKE-IT
(OUTSIDE MARICOPA COUNTY)

NO	BY	DATE	REVISIONS	DATE	APP.

Registered Professional Engineer (Electrical) Certificate No. 73954 JASON RILEY LOTT 04-24-25 Expires 9-30-27

THESE DRAWINGS ARE THE PROPERTY OF P.A.C.E. AND SHALL NOT BE REPRODUCED IN ANY MANNER NOR BE USED FOR CONSTRUCTION UNLESS STAMPED "ISSUED FOR CONSTRUCTION".

PREPARED BY: WRIGHT ENGINEERING
DESIGNED BY: JHB
DRAWN BY: XAG
CHECKED BY: JHB
SCALE: AS NOTED
DATE: NOV 2025
JOB NO. B614

TITLE: ELECTRICAL DETAILS VI

JOB: TOWN OF JEROME WASTEWATER TREATMENT PLANT
YAVAPAI CO. AZ

ISSUED FOR BID

PREPARED BY:
PACE
Advanced Water Engineering
8721 E. Via de Ventura, Suite 110, SCOTTSDALE, CA 85258
P: (480) 991-3595 | www.pacewater.com

SHEET
E4.6
89 OF 99 SHEETS

JOB NO. B614

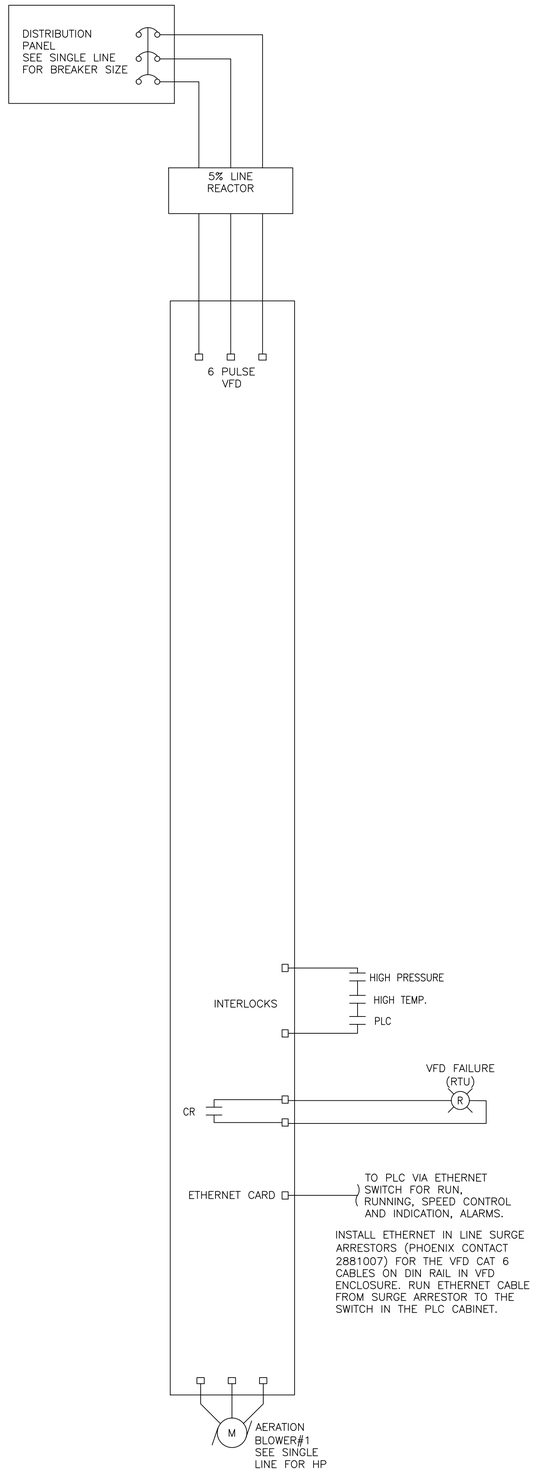

AERATION BLOWER #1 CONTROL SCHEMATIC

24VDC, 120VAC & 480VAC

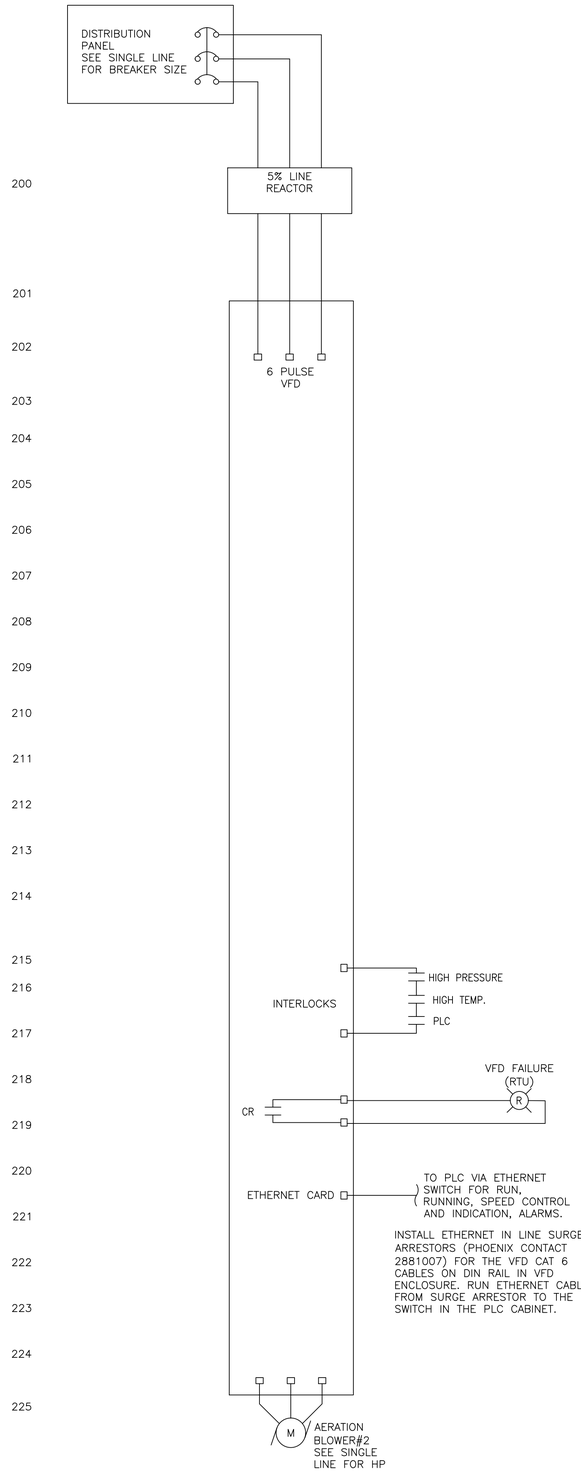

AERATION BLOWER #2 CONTROL SCHEMATIC

24VDC, 120VAC & 480VAC

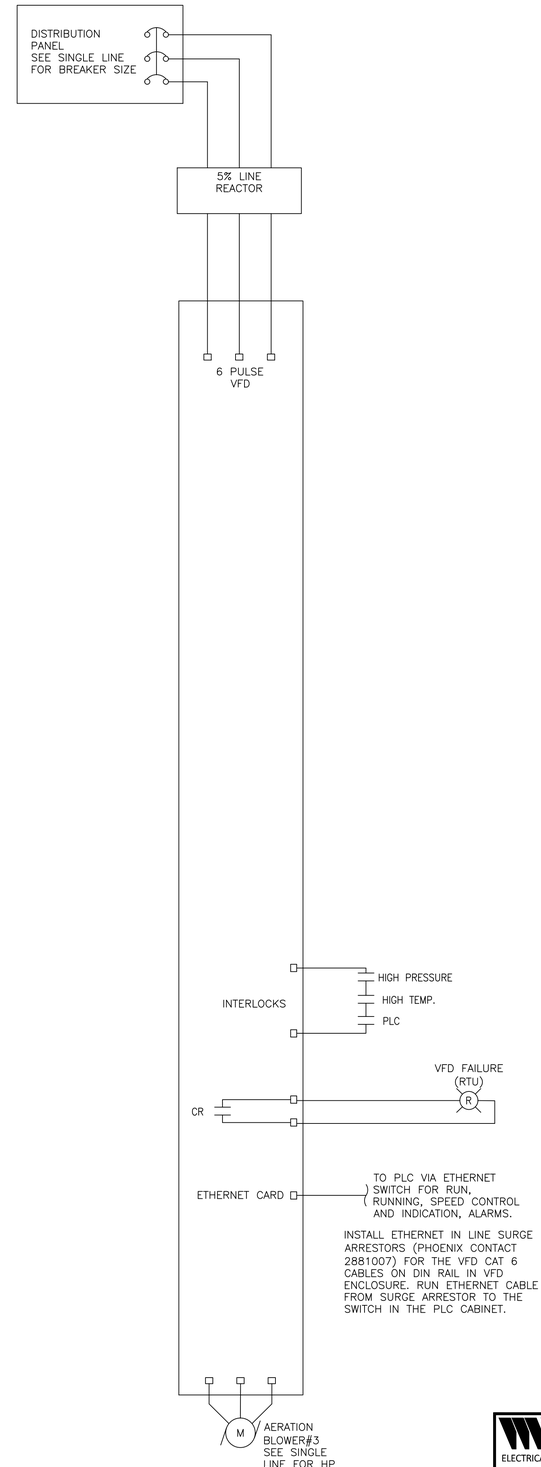

AERATION BLOWER #3 CONTROL SCHEMATIC

24VDC, 120VAC & 480VAC

NO	BY	DATE	REVISIONS	DATE	APP.

Registered Professional Engineer (Electrical) Certificate No. 73954 JASON RILLETT Date Signed 9-30-25 Expires 9-30-27

PREPARED BY: WRIGHT ENGINEERING
DESIGNED BY: JHB
DRAWN BY: XAG
CHECKED BY: JHB
DATE: NOV 2025
JOB NO.: B614
SCALE: AS NOTED

THESE DRAWINGS ARE THE PROPERTY OF P.A.C.E. AND SHALL NOT BE REPRODUCED IN ANY MANNER NOR BE USED FOR CONSTRUCTION UNLESS STAMPED "ISSUED FOR CONSTRUCTION".

TITLE
ELECTRICAL SCHEMATICS I

JOB
TOWN OF JEROME
WASTEWATER
TREATMENT PLANT
YAVAPAI CO. AZ

PREPARED BY:
PACE
Advanced Water Engineering
8723 E. Via de Commercio, Suite A-104, Scottsdale, AZ 85258
P: (480) 991-3595 | www.pacewater.com

ISSUED FOR BID

SHEET
E5.1
90 OF 99 SHEETS

JOB NO. B614

WRIGHT engineering corporation
ELECTRICAL ENGINEERING AND DESIGN
165 EAST CHILTON DRIVE
CHANDLER, ARIZONA 85225
PHONE: 480.497.5829
FAX: 480.497.5807
www.wrightengineering.us
Wright Project # 23319

CALL TWO WORKING DAYS BEFORE YOU DIG
602-263-1100
1-800-STAKE-IT
(OUTSIDE MARICOPA COUNTY)

1/20/2026 Jarrett WWTP2025 E5.1.dwg, 11x17, 1:1, jarrett, xref: 1/20/26 at 2:56:48 PM

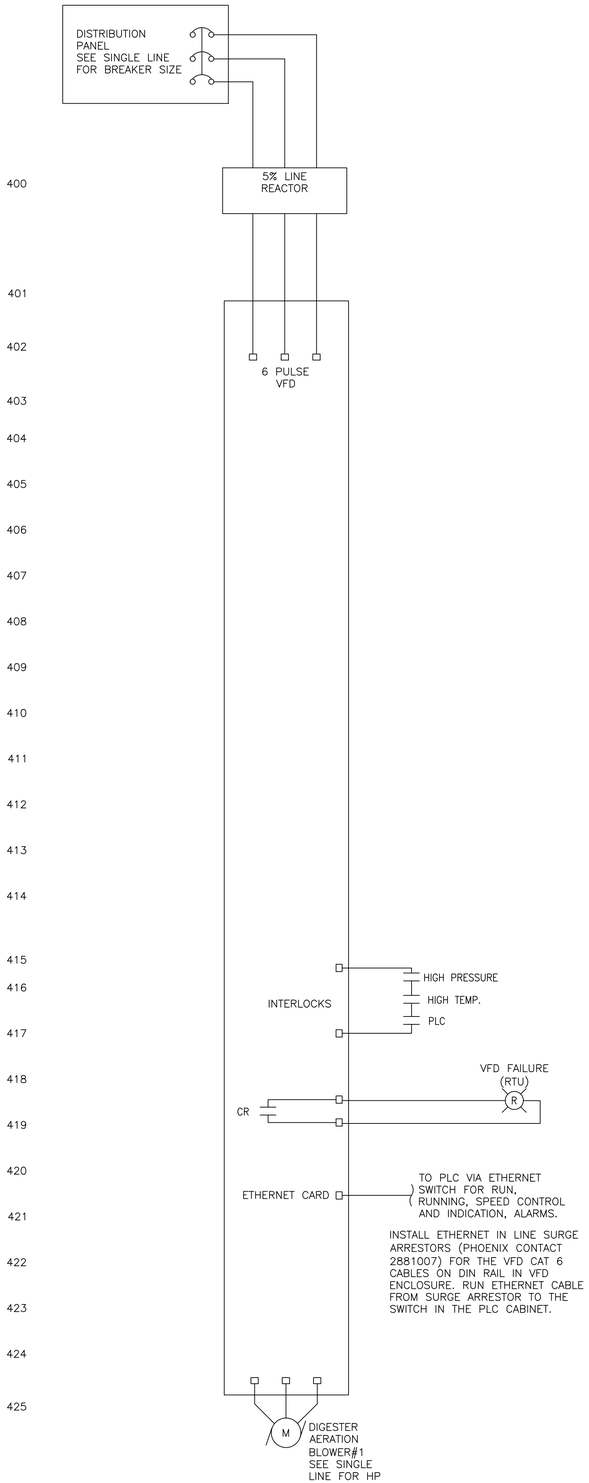

DIGESTER AERATION BLOWER #1 CONTROL SCHEMATIC

24VDC, 120VAC & 480VAC

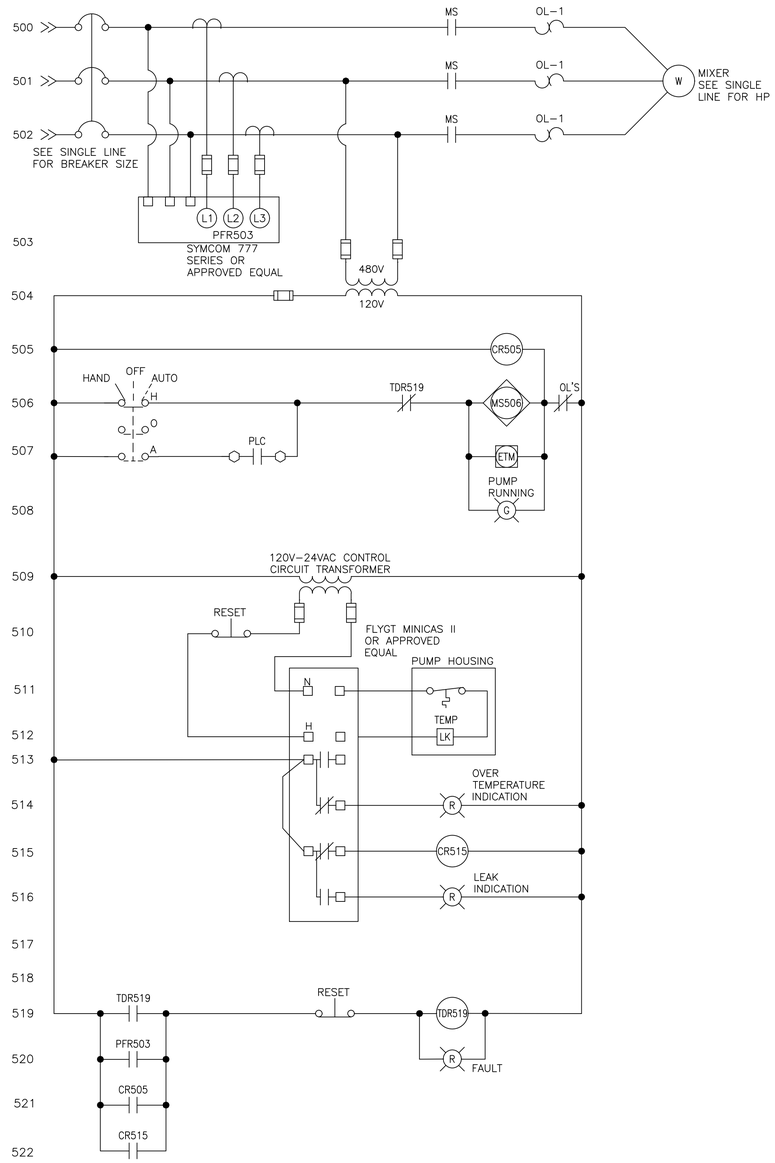

MIXER #1 CONTROL SCHEMATIC

120V

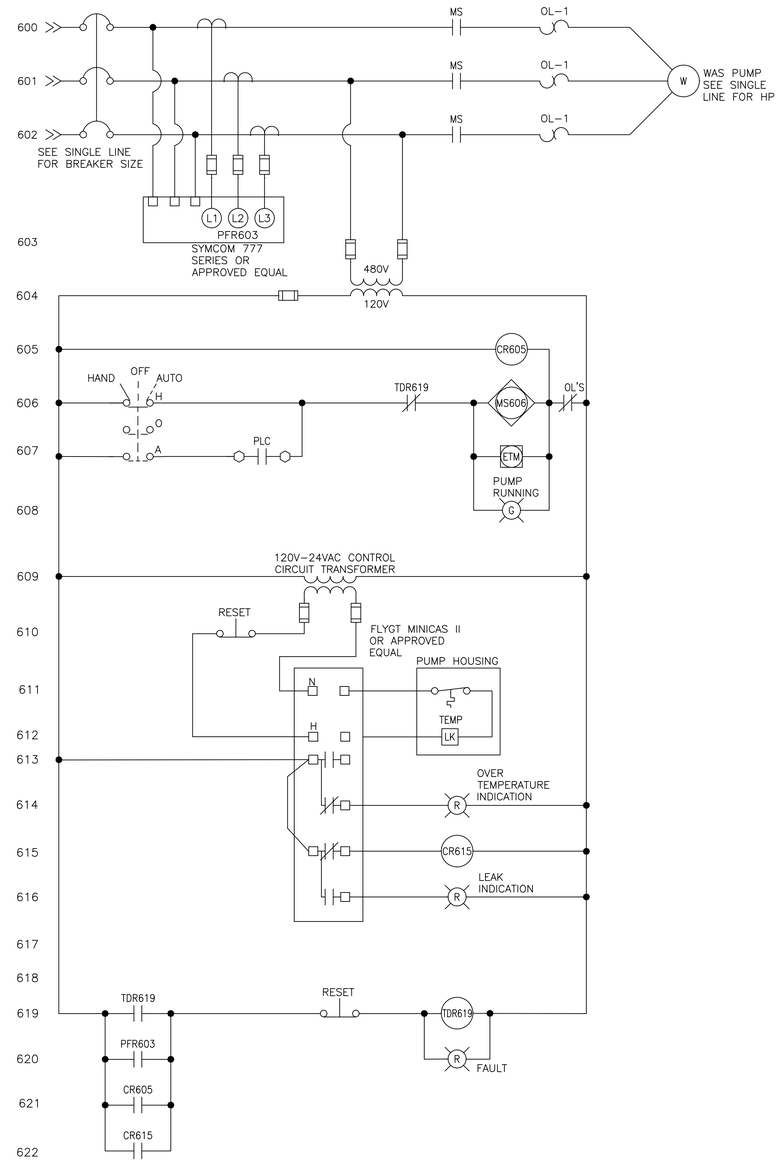

WAS PUMP #1 CONTROL SCHEMATIC

120V

NO	BY	DATE	REVISIONS	DATE	APP.

Registered Professional Engineer (Retired) Certificate No. 73954 JAMES BELLEDIN Date Signed 11-30-27 Expires 9-30-27

PREPARED BY: WRIGHT ENGINEERING
DESIGNED BY: JHB
DRAWN BY: XAG
CHECKED BY: JHB
SCALE: AS NOTED
DATE: NOV 2025
JOB NO.: B614

THESE DRAWINGS ARE THE PROPERTY OF P.A.C.E. AND SHALL NOT BE REPRODUCED IN ANY MANNER NOR BE USED FOR CONSTRUCTION UNLESS STAMPED "ISSUED FOR CONSTRUCTION".

TITLE
ELECTRICAL SCHEMATICS II

JOB
TOWN OF JEROME
WASTEWATER
TREATMENT PLANT
YAVAPAI CO. AZ

ISSUED FOR BID

PREPARED BY:
PACE
Advanced Water Engineering
8723 E. VIA DE COMERCIO, SUITE A, SCOTTSDALE, CA 85258
P. (480) 991-3595 | www.pacewater.com

SHEET
E5.2
91 OF 99 SHEETS

JOB NO. B614

WRIGHT engineering corporation
ELECTRICAL ENGINEERING AND DESIGN
165 EAST CHILTON DRIVE
CHANDLER, ARIZONA 85225
PHONE: 480.497.5829
FAX: 480.497.5807
www.wrightengineering.us
Wright Project # 23319

CALL TWO WORKING DAYS BEFORE YOU DIG
602-263-1100
1-800-STAKE-IT
(OUTSIDE MARICOPA COUNTY)

X:\2025\25-Current WWTP\25-E.dwg, Tab: E5.2, by pace on 11/24/25 at 8:46 PM

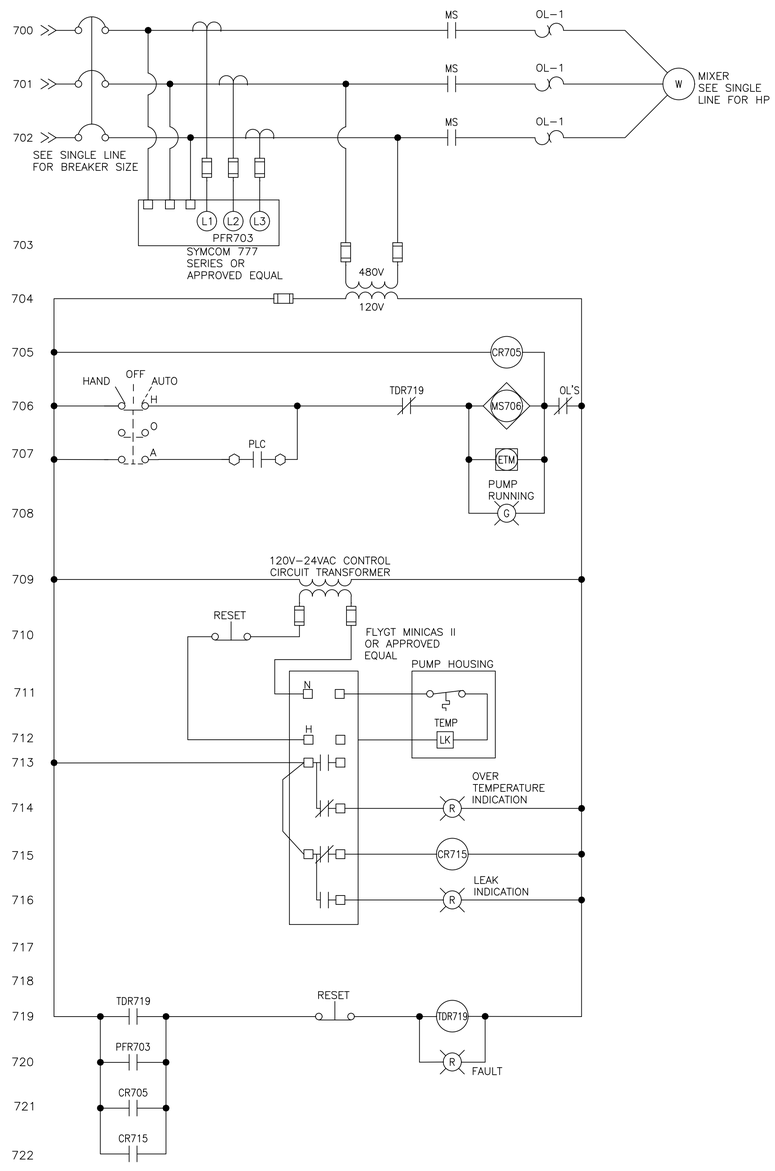

MIXER #2 CONTROL SCHEMATIC

120V

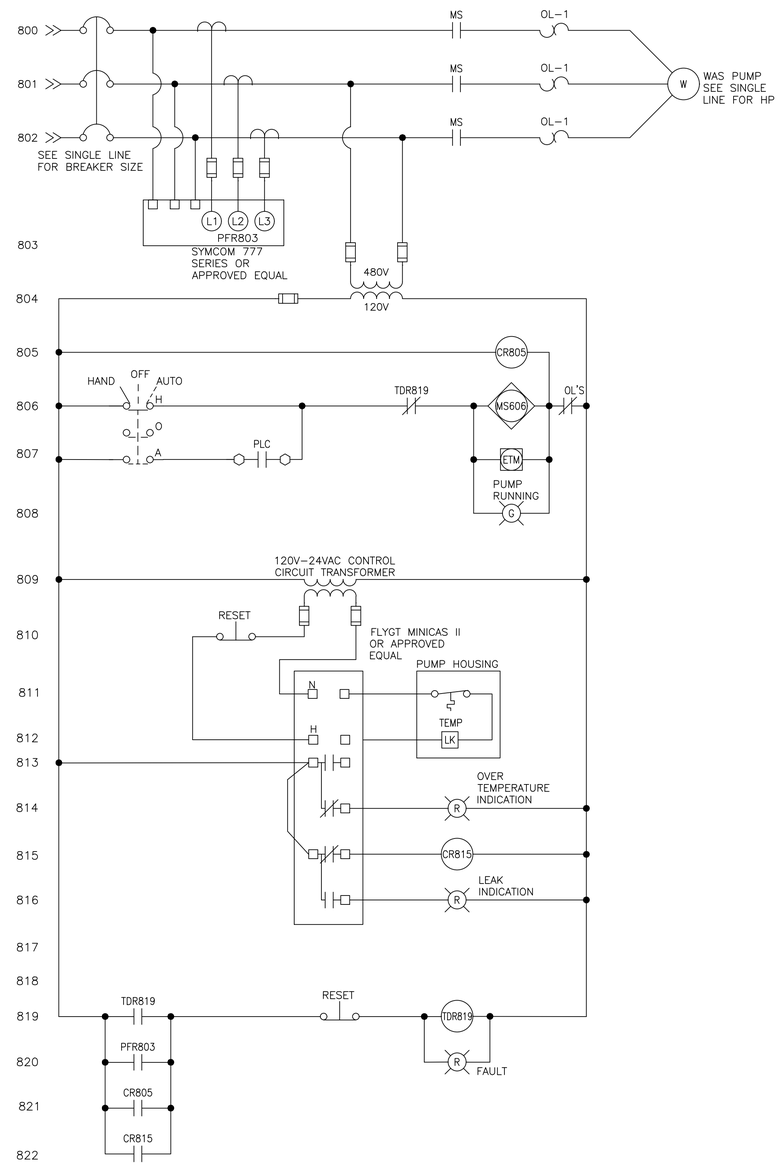

WAS PUMP #2 CONTROL SCHEMATIC

120V

ISSUED FOR BID

NO	BY	DATE	REVISIONS	DATE	APP.

Registered Professional Engineer (Retired)
Certificate No. 73954
JAMES
BELLEDUNT
Date Signed 9-30-25
Expires 9-30-27

PREPARED BY: WRIGHT ENGINEERING
DESIGNED BY: JHB
DRAWN BY: XAG
CHECKED BY: JHB
SCALE: AS NOTED
DATE: NOV 2025
JOB NO.: B614

THESE DRAWINGS ARE THE PROPERTY OF P.A.C.E. AND SHALL NOT BE REPRODUCED IN ANY MANNER NOR BE USED FOR CONSTRUCTION UNLESS STAMPED "ISSUED FOR CONSTRUCTION".

TITLE
ELECTRICAL SCHEMATICS III

JOB
TOWN OF JEROME
WASTEWATER
TREATMENT PLANT
YAVAPAI CO. AZ

PREPARED BY:
PACE
Advanced Water Engineering
8723 E. VIA DE COMMERCIO, 1ST FLOOR, SCOTTSDALE, CA 85258
P.: (408) 991-3595 | www.pacewater.com

SHEET
E5.3
92 OF 99 SHEETS

JOB NO. B614

WRIGHT engineering corporation
ELECTRICAL ENGINEERING AND DESIGN
165 EAST CHILTON DRIVE
CHANDLER, ARIZONA 85225
PHONE: 480.497.5829
FAX: 480.497.5807
www.wrightengineering.us
Wright Project # 23319

CALL TWO WORKING DAYS
BEFORE YOU DIG
602-263-1100
1-800-STAKE-IT
(OUTSIDE MARICOPA COUNTY)

K:\2025\25-Current WWTP\25-E.dwg, Tab: E5.3, by jweeks on 11/04/25 at 8:46:43 PM

INSTRUMENT IDENTIFICATION LETTERS (FSS)

	FIRST – LETTER (F)		SUCCEEDING – LETTERS (SS)		
	MEASURED OF INITIATING VARIABLE	MODIFIER	READOUT PASSIVE FUNCTION	OUTPUT FUNCTION	MODIFIER
A	ANALYSIS		ALARM		
B	BURNER, COMBUSTION		USER'S CHOICE	USER'S CHOICE	USER'S CHOICE
C	CONDUCTIVITY			CONTROLLER	
D	DENSITY	DIFFERENTIAL			
E	VOLTAGE		SENSOR, PRIMARY ELEMENT		
F	FLOW RATE	RATIO (FRACTION)			
G	GAUGE, GENERAL		GLASS VIEWING DEVICE		
H	HAND				HIGH, OPENED
I	CURRENT (ELEC.)		INDICATING, INDICATOR		
J	POWER		SCAN		
K	TIME, TIME SCHEDULE	TIME RATE OF CHANGE		CONTROL STATION	
L	LEVEL		LIGHT		LOW, CLOSED
M	MOISTURE, MOTION	MOMENTARY			MIDDLE
N	INTRUSION, STATUS	MOMENTARY	STATUS	USER'S CHOICE	USER'S CHOICE
O	OPERATOR, TORQUE		ORIFICE, RESTRICTION		USER'S CHOICE
P	PRESSURE, VACUUM		POINT (TEST) CONNECTION		
Q	QUANTITY	INTEGRATE, TOTALIZE			
R	RESET, RADIATION		RECORD OR PRINT		
S	SPEED, FREQUENCY	SAFETY		SWITCH	SLOW
T	TEMPERATURE			TRANSDUCER, TRANSMITTER	TEST
U	MULTIVARIABLE		MULTIFUNCTION	MULTIFUNCTION	MULTIFUNCTION
V	VIBRATION, MECH. ANALYSIS			VALVE, DAMPER LOUVER	
W	WEIGHT, FORCE		WELL		
X	SWITCH	X AXIS	UNCLASSIFIED	UNCLASSIFIED	UNCLASSIFIED
Y	EVENT, STATE, PRESENCE	Y AXIS	UNCLASSIFIED	RELAY, COMPUTE, CONVERT	
Z	POSITION DIMENSION	Z AXIS		DRIVER, ACTUATOR, UNCLASSIFIED FINAL CONTROL ELEMENT	

LINE NUMBERING

00" – INFLT – 001 (EXAMPLE)

- SEQUENTIAL LINE NO.
- FLUID CODE
- NOMINAL LINE SIZE

EQUIPMENT NUMBERING

F SS – PP T NN (EXAMPLE)

- ITEM NUMBER
- SERIES (TRAIN) LOCATION
- PROCESS LOCATION
- SUCCEEDING LETTERS (INSTRUMENT ID)
- FIRST LETTER (INSTRUMENT ID)

EXAMPLE:
LT-04032 = SBR TANK #2 LEVEL TRANSDUCER

PROCESS LOCATION (PP)

00	GENERAL/MISCELLANEOUS
01	FIELD
02	POTABLE WATER
03	HEADWORKS
04	SBR AERATION
05	SBR PROCESS
06	DISINFECTION
07	RETURN PS
08	DEWATERING

SERIES LOCATION (TT)

0	SHEET 0
1	SHEET 1
2	SHEET 2
3	SHEET 3
4	SHEET 4
5	SHEET 5
6	SHEET 6
7	SHEET 7
8	SHEET 8

FLUID CODE ABBREVIATION

BP	BYPASS
BW	BACKWASH
CDS	CHEMICAL DOSING
CVR	CONVEYOR
DR	DRAIN
EFFLT	EFFLUENT
EXH	EXHAUST/EXHAUST FAN
FA	FOUL AIR
FLTRT	FILTRATE
GRT	GRIT
INFLT	INFLUENT
MLSS	MIX LIQUOR
OF	OVERFLOW
PA	PROCESS AIR
PW	POTABLE WATER
RAS	RETURN ACTIVATED SLUDGE
RECYC	RECYCLE
RET	RETURN
RNS	RINSE
RW	RECLAIMED WATER
SECPR	SECONDARY PROCESS
SD	SLUDGE DISCHARGE
SNT	SUPERNATANT
SWR	SEWER
TERT	TERTIARY
TW	TREATED WATER
WAS	WASTE ACTIVATED SLUDGE
WTR	WATER
WW	WASTE WATER

EQUIPMENT NUMBERS

EQUIPMENT ABBREVIATIONS	# STARTING AT
PUMPS (PMP)	00–09
MOTORS (M/MXR/BLR)	10–19
VALVES (XV/V/SV)	20–29
LEVEL INST (LT/LS)	30–39
FLOW INST (FT/FS/FE/FIT)	40–49
PRESSURE INST (PT/PS/PG)	50–59
ANALYTICAL (AT)	60–69
MEMBRANE (SMU)	70–79
BUBBLE DIFFUSER (XBD)	80–85
MISCELLANEOUS (MISC)	90–99

GENERAL INSTRUMENT OR FUNCTION SYMBOLS

	FIELD MOUNTED	PRIMARY LOCATION ACCESSIBLE TO OPERATOR	PRIMARY LOCATION INACCESSIBLE TO OPERATOR	AUXILIARY LOCATION ACCESSIBLE TO OPERATOR	
DISCRETE INSTRUMENTS	○	⊖	⊖	⊖	HARDWARE INTERLOCK ◇I
SHARED DISPLAY SHARED CONTROL	○	⊖	⊖	⊖	
COMPUTER FUNCTION	⬡	⬡	⬡	⬡	PLC "SOFT" INTERLOCK
PROGRAMMABLE LOGIC CONTROL	◇	◇	◇	◇	◇I

VALVE SYMBOLS

NC NO

- GATE VALVE
- GATE VALVE
- BALL VALVE
- DIAPHRAGM VALVE
- PLUG VALVE
- 3-WAY BALL VALVE
- NEEDLE VALVE/KNIFE GATE
- MUD VALVE
- FLANGED BUTTERFLY VALVE
- LUGGED BUTTERFLY VALVE
- CHECK VALVE
- DOUBLE LEAF CHECK VALVE
- WEIR GATE/TELESCOPE VALVE
- STOP LOG/GATE
- SLUICE/SLIDE GATE

VALVE ACTUATORS

- DIAPHRAGM ACTUATOR
- MOTOR ACTUATOR
- SOLENOID ACTUATOR
- CYLINDER ACTUATOR
- LEVER
- HAND WHEEL
- CHAIN WHEEL

RELIEF DEVICES

- AIR/PRESSURE RELIEF
- VACUUM RELIEF
- RUPTURE DISK FOR PRESSURE RELIEF
- RUPTURE DISK FOR VACUUM RELIEF

REGULATORS

- PRESSURE REDUCING
- BACK PRESSURE
- REGULATOR WITH EXTERNAL PILOT
- DIFFERENTIAL PRESSURE

PIPING SYMBOLS

- Y STRAINER
- BLIND FLANGE
- FUNNEL
- CONCENTRIC REDUCER
- ECCENTRIC REDUCER
- EDUCTOR
- WELDED CAP
- WELDED PIPE END
- SCREWED CAP
- UNION
- CAMLOCK FITTING
- FLEXIBLE LINE
- SPECTACLE BLIND
- EXPANSION JOINT
- TP XX TIE-IN POINT
- FLEX JOINT

MECHANICAL EQUIPMENT

- METERING PUMP
- CENTRIFUGAL PUMP OR BLOWER
- SUBMERSIBLE PUMP
- TURBINE PUMP
- ROTARY BLOWER
- MIXER
- PROGRESSIVE CAVITY PUMP
- AERATOR
- EXHAUST FAN
- VERTICAL MULTI-STAGE PUMP
- ROTARY LOBE PUMP
- DECANTER
- ULTRA SONIC LEVEL TRANSMITTER
- CHEMICAL INJECTOR
- FLOW METER OR MOTOR
- ROTOMETER
- MAZZI INJECTOR
- VORTEX SHEDDING
- SONIC
- GRINDER
- STATIC MIXER
- SILENCER
- RADAR LEVEL TRANSMITTER
- AV SENSOR
- H/S HORN/STROBE LIGHT

NOTE: ALL PRESSURE GAUGES AND OTHER SMALL PROCESS MECHANICAL INSTRUMENT EQUIPMENT SHALL BE SUPPLIED WITH ISOLATION VALVES AND ADDITIONAL APPURTENANCES (E.G. PRESSURE PULSATION DAMPENERS/SNUBBERS) AS REQUIRED FOR PROPER OPERATION

ABBREVIATIONS

ACP	ACCESS CONTROL PANEL	NTU	TURBIDITY
AE	ANALYTICAL SENSOR	OC	ODOR CONTROL
AI	ANALOG INPUT	OCA	OPEN–CLOSE–AUTO
AIT	ANALYTICAL INDICATOR TRANSMITTER	OCR	OPEN–CLOSE–REMOTE
AMP	AMPERE	OFS	OFF SPEC.
AO	ANALOG OUTPUT	OIT	OPERATOR INTERFACE TERMINAL
AT	ANALYTICAL TRANSMITTER	OO	ON/OFF (MAINTAINED)
ATS	AUTOMATIC TRANSFER SWITCH	OOA	ON–OFF–AUTO
AV	AIR VELOCITY	OOR	ON–OFF–REMOTE
BLR	BLOWER	OSC	OPEN–STOP–CLOSE
CB	CIRCUIT BREAKER	PE	PRESSURE SENSOR
CBL	COARSE BUBBLE DIFFUSER	PG	PRESSURE GAUGE
CE	CONDUCTIVITY SENSOR (TDS)	PH	POTENTIAL OF HYDROGEN
CFR	CHEMICAL FEEDER	PI	PRESSURE INDICATOR / PULSE INPUT
CG	COMBUSTIBLE GASES	PID	PROPORTIONAL–INTEGRAL–DERIVATIVE
CHV	CHECK VALVE	PIT	PRESSURE INDICATOR TRANSMITTER
CL2	CHLORINE	PLC	PROGRAMMABLE LOGIC CONTROLLER
CMP	COMPACTOR	PMP	PUMP
CON	CONVEYOR	PNL	PANEL
CWC	COMPACTOR/WASHER/CONVEYOR	PO	PULSE OUTPUT
DCS	DISTRIBUTED CONTROL SYSTEM	PPG	POUNDS PER GALLON
DI	DIGITAL INPUT	PPH	POUNDS PER HOUR
DO	DISSOLVED OXYGEN / DIGITAL OUTPUT	PPM	PARTS PER MILLION
DRY	BIOSOLIDS DRYER	PRESS	PRESSURE
DSS	DISTRIBUTION SWITCHBOARD SECTION	PRV	PRESSURE RELIEF OR REDUCING VALVE
DWG	DRAWING	PSH	PRESSURE SWITCH HIGH
EST	EMERGENCY STOP	PSI	POUNDS PER SQUARE INCH
ETM	ELAPSED TIME METER	PSL	PRESSURE SWITCH LOW
EXIST	EXISTING	PT	PRESSURE TRANSMITTER
FBD	FINE BUBBLE DIFFUSER	PV	PROCESS VARIABLE
FC	FAIL CLOSED	REM	REMOTE
FCV	MODULATING CONTROL VALVE	RF	RADIO FREQUENCY
FE	FLOW SENSOR	RIO	REMOTE INPUT–OUTPUT
FeCL2	FERROUS CHLORIDE	RST	RESET
FI	FLOW INDICATOR	RTU	REMOTE TELEMETRY UNIT
FIT	FLOW INDICATOR TRANSMITTER	SES	SERVICE ENTRANCE SECTION
FR	FORWARD–REVERSE	SG	SLUICE GATE
FS	FINE SCREEN / FULL SPEED	SLC	SINGLE LOOP CONTROLLER
FSL	FLOW SWITCH LOW	SLOS	START–LOCK–OFF–STOP
FT	FLOW TRANSMITTER	SO2	SULFUR D
GDR	GRINDER	SMU	SUBMERGED MEMBRANE UNIT
GPD	GALLONS PER DAY	SP	SETPOINT
GPH	GALLONS PER HOUR	SPD	SPEED
GPM	GALLONS PER MINUTE	SPR	SPARE
GRC	GRIT CLASSIFIER	SS	START/STOP (MAINTAINED)
H_2S	HYDROGEN SULFIDE	SSS	SOLID STATE STARTER (SOFT START)
HMI	HUMAN MACHINE INTERFACE	STG	MANUAL STOP GATE
HOA	HAND–OFF–AUTO	SUG	SLUICE GATE
HOR	HAND–OFF–REMOTE	SV	SOLENOID VALVE
JB	JUNCTION BOX	TC	TABLET CHLORINATOR
KGV	KNIFE GATE VALVE	TDS	TOTAL DISSOLVED SOLIDS
LAN	LOCAL AREA NETWORK	TE	TEMPERATURE SENSOR
LCP	LOCAL CONTROL PANEL	TG	TEMPERATURE GAUGE
LE	LEVEL SENSOR	TI	TEMPERATURE INDICATOR
LIT	LEVEL INDICATOR TRANSMITTER	TIT	TEMPERATURE INDICATOR TRANSMITTER
LOS	LOCK–OFF–STOP	TNK	TANK
LR	LOCAL / REMOTE	TS	TEMPERATURE SWITCH
LSH	LEVEL SWITCH HIGH	TSH	TEMPERATURE SWITCH HIGH
LSHH	LEVEL SWITCH HIGH HIGH	TT	TEMPERATURE TRANSMITTER
LSL	LEVEL SWITCH LOW	TV	TELESCOPING VALVE
LSLL	LEVEL SWITCH LOW LOW	UPS	UNINTERRUPTIBLE POWER SUPPLY
LSM	LEVEL SWITCH MEDIUM	UVU	ULTRAVIOLET UNIT
LT	LEVEL TRANSMITTER	V	MANUAL VALVE
MCAS	MINI CONTROL AND STATUS	VFD	VARIABLE FREQUENCY DRIVE
MCC	MOTOR CONTROL CENTER	WE	WEIR
ME	MOISTURE SENSOR	WEG	WEIR GATE
MGD	MILLION GALLONS PER DAY	WR	ADJUSTABLE WEIR
MGL	MILLIGRAM PER LITER	XV	AUTOMATED OPEN/CLOSE VALVE/GATE
MOT	MOTOR	ZS	SWITCH POSITION
MS	MOTOR STARTER		
MTU	MASTER TELEMETRY UNIT		
MXR	MIXER		
NaHSO3	SODIUM BISULFITE		
NaOCL	SODIUM HYPOCHLORITE		

LINE CODES

- MAJOR PROCESS LINE
- MINOR PROCESS LINE
- AIR
- ELECTRICAL
- PLC TO HMI COMMUNICATION
- AUTO–DIALER AND PRIORITY LEVEL

00"–XXX — LINE SIZE & NUMBER

PROCESS CONTINUATION WITHIN SCOPE

INSTRUMENT NUMBERING

FSS NPPNNN — XX – DEVICE FUNCTION

- FIRST LETTER (INSTRUMENT ID)
- SUCCEEDING LETTERS (INSTRUMENT ID)
- XX – DEVICE FUNCTION
- EQUIPMENT NUMBER

LINE NUMBER GROUPS

000	OVERFLOW/ BYPASS/ DRAIN/ SUPERNATANT/SCNG
100	INFLUENT/ MIX LIQUOR/ SECONDARY EFFLUENT / EFFLUENT
200	TERTIARY/ REUSE WATER/ BACKWASH/ RECYCLE WATER
300	PERMEATE/ FILTRATE/ CENTRATE
400	PROCESS AIR
500	CHEMICAL DOSING/ POLYMER
600	FOUL AIR
700	WATER/ TREATED WATER/ FILTERED WATER
800	RAS/ SOLIDS
900	WAS/ SCUM/ WASTE WATER/ RAW WATER

EQUIPMENT SUPPLIED BY IDENTIFIER

✳ AQUA–AEROBICS

NO	BY	DATE	REVISIONS	DATE	APP.

Registered Professional Engineer (Civil) CERTIFICATE NO. 70097 Timothy B. Pierce Signed 12/31/25 ARIZONA, U.S.A. Expires 12/31/28

THESE DRAWINGS ARE THE PROPERTY OF P.A.C.E. AND SHALL NOT BE REPRODUCED IN ANY MANNER NOR BE USED FOR CONSTRUCTION UNLESS STAMPED "ISSUED FOR CONSTRUCTION".

PREPARED BY: PACE
DESIGNED BY: NE
DRAWN BY: DS, WW
CHECKED BY: TP
SCALE: AS NOTED
DATE: NOV 2025
JOB NO.: B614

TITLE: **P&ID GENERAL NOTES**

JOB: TOWN OF JEROME WASTEWATER TREATMENT PLANT — YAVAPAI CO. AZ

100% ISSUED FOR BID

PREPARED BY: TAYLOR B. PIERCE R.C.E 70097 DATE
PACE Advanced Water Engineering
8723 E. Via de Ventura, Suite 270, SCOTTSDALE, CA 85258
P: (480) 991-3995 | www.pacewater.com

SHEET I0.0
93 OF 99 SHEETS

JOB NO. B614

AUTO-DIALER

PRIORITY NO. ALARM
NOTIFICATION

SCREEN

FAIL ALARM YA 03010

FAIL Y1 03010

HMI

HMI

FAIL Y1 03010

SBR CONTROL PANEL (VENDOR)

SBR CONTROL PANEL (VENDOR)

(480 VAC) CB

MCC

MCC

MS 03010 POT/HIM
HS 03010A HOA
MS 03010B POT/HIM
HS 03010B HOA
MS 03010C POT/HIM
HS 03010C HOA
G RUNNING
Y FAULT
ETM
HEADWORKS CONTROL PANEL

M-03010A
M-03010B
EST 03010A
EST 03010B
LE-03031
LE-03032
LE-03033
LE-03034

SEWER MAIN FROM COLLECTION SYSTEM
12"-SWR-101

ROCK TRAP

8"-SWR-102

PV-03021
PV-03022

ZSO 03023
ZSC 03023
HS 03023
SV 03023

CLIMBER BAR SCREENS

10"-INFLT-103

A SCREENED INFLUENT TO SBR
REF SHT I1.1

POTABLE WATER FROM TOWN
2"-WTR-701

V-02020

A DRYING BED LIFT STATION RETURN
REF SHT I1.4
3"-DR RET-001

CV-07020

BV-07021

EST 03010C
M-03010C

1"-DR-005

DISPOSAL

HEADWORKS

W:\B614\Engineering\B614-30sheets\B614-I1.1.dwg - Tab: I1.0 - by naddington on 11/17/25 at 9:55:57 AM

100% ISSUED FOR BID

PREPARED BY: TAYLOR B. PIERCE R.C.E 70097 DATE

PACE
Advanced Water Engineering
8723 E. Via de Ventura, Suite 130 | SCOTTSDALE, CA 85258
P: (480) 991-3995 | www.paceadvisor.com

TITLE: HEADWORKS

JOB: TOWN OF JEROME
WASTEWATER
TREATMENT PLANT
YAVAPAI CO. AZ

Registered Professional Engineer (Civil)
CERTIFICATE NO. 70097
Signed
ARIZONA, U.S.A.
Expires 12/31/28

NO	BY	DATE	REVISIONS	DATE	APP.

THESE DRAWINGS ARE THE PROPERTY OF P.A.C.E. AND SHALL NOT BE REPRODUCED IN ANY MANNER NOR BE USED FOR CONSTRUCTION UNLESS STAMPED 'ISSUED FOR CONSTRUCTION'.

PREPARED BY: PACE
DESIGNED BY: NE
DRAWN BY: DS, WW
CHECKED BY: TP
SCALE: AS NOTED
DATE: NOV 2025
JOB NO.: B614

SHEET
I1.0
94 OF 99 SHEETS

JOB NO. B614

AUTO-DIALER

PRIORITY NO. ALARM NOTIFICATION

SBR INFLUENT VALVE (1) | SBR #1 MIXER (2) | SBR #1 LEVEL (1)(1)(1)(1) | SBR #1 DO (2)(2) | WAS PUMP #1 (1) | DECANTER (1) | DECANT VALVE (1)

HMI

SBR CONTROL PANEL (VENDOR)

MCC

(120 VAC) CB (120 VAC) CB — CB

(480 VAC) CB

B — PROCESS AIR FROM BLOWER BUILDING — 4"-PA-402 — REF SHT I1.3

A — PROCESS AIR FROM BLOWER BUILDING — 4"-PA-401 — REF SHT I1.3

A — SCREENED INFLUENT FROM HEADWORKS — 10"-INFLT-103 — REF SHT I1.0

C — SUPERNATANT FROM AEROBIC DIGESTER — 6"-SNT-003 — REF SHT I1.2

SBR INFLUENT VALVE 1 — HS 05120, ZSO 05120, ZSC 05120, PV 05120 — PV-05120 — BFV-04326A, BFV-04326B (4"x3")

SBR INFLUENT VALVE 2 — HS 05122, ZSO 05122, ZSC 05122, PV 05122 — PV-05122 — BFV-04327A, BFV-04327B (4"x3")

SBR MIXER 1 MXR-05110 — ME 05110, TE 05110 (LEAK, TEMP)

SBR MIXER 2 MXR-05112 — ME 05112, TE 05112 (LEAK, TEMP)

SBR DECANTER 1 M-05111 — BFV 05121, ZSO 05121, ZSC 05121, HS 05121 — BFV-05121

SBR DECANTER 2 M-05113 — BFV 05123, ZSO 05123, ZSC 05123, HS 05123 — BFV-05123

3"-PA-404, 3"-PA-405, 3"-PA-406, 3"-PA-407

LE 05130, LSH 05131A, LSL 05131B, AT 05160A, AE 05160B DO, ME 05100 LEAK, TE 05100 TEMP

LE 05132, LSH 05133A, LSL 05133B, AT 05161A, AE 05161B DO, ME 05101 LEAK, TE 05101 TEMP

WAS PUMP 1 PMP-05100 — RTM 05110, MS 05110, HS 05110 HOA, TS 05110 TEMP, MA 05110 LEAK

WAS PUMP 2 PMP-05101 — MA 05100 LEAK, TS 05100 TEMP, MS 05100, HS 05100 HOA

FBD-04180 — SBR 1 — V-08120 — PV-08122

FBD-04181 — SBR 2 — V-08121 — PV-08123

SAME AS SBR #1

2"-WAS-901 — A — WASTE SLUDGE TO AEROBIC DIGESTER — REF SHT I1.2

6"-EFFLT-104 — B — EFFLUENT TO SURGE BASIN — REF SHT I1.2

6"-OF-002 — C — OVERFLOW TO DRYING BED LIFT STATION — REF SHT I1.4

6"-WAS-902 — D — WASTE SLUDGE TO DEWATERING — REF SHT I1.4

SEQUENCING BATCH REACTOR

100% ISSUED FOR BID

PREPARED BY: TAYLOR B. PIERCE — DATE

PACE — Advanced Water Engineering — 8723 E. VIA DE COMMERCIO, BLDG. A, SCOTTSDALE, AZ 85258 — P: (480) 991-3595 | www.paceaztr.com — R.C.E. 70097

JOB: TOWN OF JEROME WASTEWATER TREATMENT PLANT — YAVAPAI CO. AZ

TITLE: SEQUENCING BATCH REACTOR

SHEET I1.1 — 95 OF 99 SHEETS

JOB NO. B614

NO	BY	DATE	REVISIONS	DATE	APP.

Registered Professional Engineer (Civil) — CERTIFICATE NO. 70097 — Timothy B. Pierce — Signed — ARIZONA, U.S.A. — Expires 12/31/28

PREPARED BY: PACE — DESIGNED BY: NE — DRAWN BY: DS, WW — CHECKED BY: TP — SCALE: AS NOTED — DATE: NOV 2025 — JOB NO.: B614

THESE DRAWINGS ARE THE PROPERTY OF P.A.C.E. AND SHALL NOT BE REPRODUCED IN ANY MANNER NOR BE USED FOR CONSTRUCTION UNLESS STAMPED 'ISSUED FOR CONSTRUCTION'.

W:\B614\Engineering\B614-30sheet\B614I1.1.dwg - Tab: I1.1 - by neddington on 11/17/25 at 8:55:57 AM

AUTO-DIALER

PRIORITY NO. ALARM NOTIFICATION

SURGE BASIN LEVEL

EFFLUENT FLOW METER

EFFLUENT DISCHARGE VALVE

DIGESTER LEVEL SWITCHES

HMI

SBR CONTROL PANEL (VENDOR)

MCC

(120 VAC) CB

(480 VAC) CB

C PROCESS AIR FROM BLOWER BUILDING 2"-PA-403 REF SHT I1.3

A WASTE SLUDGE FROM SBR 2"-WAS-901 REF SHT I1.1

B EFFLUENT FROM SBR 6"-EFFLT-104 REF SHT I1.1

6"-EFFLT-105

PV-06220

FM-06240

BFV-06221

TAB-06290

CHLORINATION TABLET FEEDER

SURGE BASIN

CHLORINE CONTACT BASIN

V-06222 (WEIR SLIDE GATE)

DECHLORINATION TABLET FEEDER

TAB-06291

6"-EFFLT-106

— TREATED EFFLUENT TO BITTER CREEK

AEROBIC DIGESTER

CBD-04280

V-08220

PV-08221

V-05220

6"-SNT-003

C SUPERNATANT TO SBR 1 REF SHT I1.1

6"-SD-801

A DIGESTED SLUDGE TO DEWATERING REF SHT I1.4

CHLORINE CONTACT AND DIGESTER

100% ISSUED FOR BID

PREPARED BY: TAYLOR B. PIERCE

PACE Advanced Water Engineering
8723 E. Via de Commercio, Suite 1-4, SCOTTSDALE, CA 85258
P: (408) 991-3595 | www.pacewater.com

R.C.E 70097 DATE

NO	BY	DATE	REVISIONS	DATE	APP.

Registered Professional Engineer (Civil) CERTIFICATE NO. 70097 Timothy B. Pierce Signed ARIZONA, U.S.A. Expires 12/31/28

PREPARED BY:	PACE
DESIGNED BY:	NE
DRAWN BY:	DS, WW
CHECKED BY:	TP
SCALE:	AS NOTED
DATE	NOV 2025
JOB NO.	B614

THESE DRAWINGS ARE THE PROPERTY OF P.A.C.E. AND SHALL NOT BE REPRODUCED IN ANY MANNER NOR BE USED FOR CONSTRUCTION UNLESS STAMPED 'ISSUED FOR CONSTRUCTION'.

TITLE: CHLORINE CONTACT & DIGESTER

JOB: TOWN OF JEROME WASTEWATER TREATMENT PLANT YAVAPAI CO. AZ

SHEET I1.2 96 OF 99 SHEETS

JOB NO. B614

W:\B614\Engineering\B614-Sh\sheets\B614-I1.1.dwg - Tab: I1.2 - by reddington on 11/17/25 at 9:55:57 AM

AUTO-DIALER

PRIORITY NO. ALARM NOTIFICATION

AERATION BLOWER #1 | AERATION BLOWER #2 | AERATION BLOWER #3 | DIGESTER BLOWER #1 | SBR #1 AIR VALVE | SBR #2 AIR VALVE

HMI

SBR CONTROL PANEL (VENDOR)

MCC

NOTE:
CONTRACTOR TO REVIEW SHOP DRAWINGS FROM EQUIPMENT MANUFACTURER FOR SIZE, NUMBER AND SCOPE OF SUPPLY OF VALVES AND INSTRUMENTS.

BLOWER 1 — BLR-04310 — AMBIENT AIR — ENCLOSURE AIR FILTER — PT 04310 — TT 04310 — BLOW OFF VALVE — CV-04320A — BFV-04320B

BLOWER 2 — BLR-04311 — CV-04321A — BFV-04321B

BLOWER 3 — BLR-04312 — CV-04322A — BFV-04322B

BLOWER 4 — BLR-04313 — CV-04323A — BFV-04523B

3" | 6" | 2"x6" | BFV-04524 | 2"

6"x4" — ZSO 04325A — ZSC 04325A — XV 04325A — BFV-04325A — 4"-PA-401 — A — PROCESS AIR TO SBR 1 — REF SHT I1.1

6"x4" — ZSO 04325B — ZSC 04325B — XV 04325B — BFV-04325B — 4"-PA-402 — B — PROCESS AIR TO SBR 2 — REF SHT I1.1

2"-PA-403 — C — PROCESS AIR TO AEROBIC DIGESTER — REF SHT I1.2

(120 VAC) CB

BLOWER ROOM

NO	BY	DATE	REVISIONS	DATE	APP.

Registered Professional Engineer (Civil) — CERTIFICATE NO. 70097 — Nicholas E. Bosse — Signed — ARIZONA U.S.A. — Expires 12/31/28

THESE DRAWINGS ARE THE PROPERTY OF P.A.C.E. AND SHALL NOT BE REPRODUCED IN ANY MANNER NOR BE USED FOR CONSTRUCTION UNLESS STAMPED 'ISSUED FOR CONSTRUCTION'.

PREPARED BY: PACE
DESIGNED BY: NE
DRAWN BY: DS, WW
CHECKED BY: TP
SCALE: AS NOTED
DATE: NOV 2025
JOB NO.: B614

TITLE: BLOWER ROOM

JOB: TOWN OF JEROME WASTEWATER TREATMENT PLANT — AZ — YAVAPAI CO.

100% ISSUED FOR BID

PREPARED BY: TAYLOR B. PIERCE — R.C.E 70097 — DATE

PACE
Advanced Water Engineering
8723 E. Via de Commercio, Suite 104 | Scottsdale, AZ 85258
P. (480) 991-3995 | www.pacewater.com

SHEET I1.3
97 OF 99 SHEETS

JOB NO. B614

W:\B614\Engineering\B614-30\sheets\B614-I1.1.dwg - Tab: I1.3 - by reddington on 11/17/25 at 9:35:57 AM

AUTO-DIALER

PRIORITY NO. ALARM NOTIFICATION

DEWATERING FEED PUMP

SLUDGE FEED VALVE

DRYING BED LIFT STATION PUMPS

FAIL ALARM YA 08400

RUNNING Y1 08400

RUN YC 08400

FAIL ALARM YA 08420B

OPEN Y1 08420B

FAIL ALARM YA 07400A

FAIL ALARM YA 07400B

RUNNING Y1 07400A

RUNNING Y1 07400B

HMI

CLOSE YC 08420B

OPEN Y1 08420B

DI

DO

(120 VAC)

CB

SBR CONTROL PANEL (VENDOR)

(480VAC)

MCC

MS 08400

HS 08400 HOA

G RUNNING

ETM

Y FAULT

SLUDGE BAGGING SYSTEM CONTROL PANEL

MS 07400A

HS 07400A HOA

MS 07400B

HS 07400B HOA

DRYING BED LIFT STATION CONTROL PANEL

HS 07401 HO

OVERFLOW LIFT STATION CONTROL PANEL

C OVERFLOW FROM SBR REF SHT I1.1

8"-OF-002

A DIGESTED SLUDGE FROM DIGESTER REF SHT I1.2

6"-SD-801

D WASTE SLUDGE FROM SBR 1 & 2 REF SHT I1.1

6"-WAS-902

— POTABLE WATER FROM TOWN

2"-PW-702

V-02420

PV-08421

6"x4"

PV-08420A

4"-WAS-903

PV-08420B

ZSO 08420B

ZSC 08420B

XV 08420B

PV-08422A

PV-08422B

SLUDGE DRYING BEDS

DISPOSAL

4"-FLTRT-302

SLUDGE BAGGING UNIT BAG-08490

4"-FLTRT-301

PMP-08400

BV-08423

CV-08424 BV-08425

MXR-08410

PMP-08401

1"-CDS-501

DRY POLYMER MIXING UNIT

ARV-07422

3"-DR RET-001

A OVERFLOW RETURN TO HEADWORKS REF SHT I1.0

LSHH 07430A

LSH 07430B

LSL 07430C

CV-07420A V-07420B

CV-07421A V-07421B

PMP-07400A PMP-07400B

DRYING BED LIFT STATION

4"-OF-003

EMERGENCY OVERFLOW BASIN

ARV-07425

2"-OF RET-004

LSHH 07431A

LSL 07431B

CV-07423 BV-07424

4"-OF-004

PMP-07401

OVERFLOW LIFT STATION

DEWATERING AND LIFT STATIONS

100% ISSUED FOR BID

PREPARED BY: TAYLOR B. PIERCE R.C.E 70097 DATE

PACE
Advanced Water Engineering
8723 E. Via de Commercio, Suite A-1, Scottsdale, CA 85258
P: (480) 991-3595 | www.pacewater.com

NO	BY	DATE	REVISIONS	DATE	APP.

Registered Professional Engineer (Civil) CERTIFICATE NO. 70097 Timothy B. Pierce Signed ARIZONA, U.S.A. Expires 12/31/28

PREPARED BY:	PACE
DESIGNED BY:	NE
DRAWN BY:	DS, WW
CHECKED BY:	TP
SCALE:	AS NOTED
DATE	NOV 2025
JOB NO.	B614

TITLE: DEWATERING & LIFT STATIONS

JOB: TOWN OF JEROME WASTEWATER TREATMENT PLANT AZ

YAVAPAI CO.

SHEET I1.4

98 OF 99 SHEETS

JOB NO. B614

THESE DRAWINGS ARE THE PROPERTY OF P.A.C.E. AND SHALL NOT BE REPRODUCED IN ANY MANNER NOR BE USED FOR CONSTRUCTION UNLESS STAMPED 'ISSUED FOR CONSTRUCTION'.

W:\B614\Engineering\B614-30\sheets\B614-I1.1.dwg - Tab: I1.4 - by raddington on 11/17/25 at 9:55:57 AM

AUTO-DIALER

PRIORITY NO. ALARM NOTIFICATION

ATS

GENERATOR

FAULT ALARM YA 01003

LOW ALARM YA 01003

UTILITY SWITCH POSITION YI 01001

FAULT YI 01003

OFF / RUNNING YI 01003

LOW FUEL LEVEL YI 01003

HMI

SBR CONTROL PANEL (VENDOR)

DI

RUN R

FAIL A

I

MCC

(480 VAC) CB

LOCATED ON GENERATOR

ANNUNCIATOR

SWITCH POSITION

DI 01002

DO 01002

GEN RUN

EST 01000

ON-BOARD POWER ZONE

POWER FROM APS

TRANSFORMER (BY UTILITY)

POWER TO

SES

ATS

CALL

GENERATOR

POWER TO

SES, ATS, AND STAND-BY GENERATOR

NO	BY	DATE	REVISIONS	DATE	APP.

Registered Professional Engineer (Civil) CERTIFICATE NO. 70097 Timothy B. Pierce Signed ARIZONA, U.S.A. Expires 12/31/28

PREPARED BY: PACE
DESIGNED BY: NE
DRAWN BY: DS, WW
CHECKED BY: TP
SCALE: AS NOTED
DATE: NOV 2025
JOB NO.: B614

THESE DRAWINGS ARE THE PROPERTY OF P.A.C.E. AND SHALL NOT BE REPRODUCED IN ANY MANNER NOR BE USED FOR CONSTRUCTION UNLESS STAMPED 'ISSUED FOR CONSTRUCTION'.

TITLE: GENERATOR

JOB: TOWN OF JEROME WASTEWATER TREATMENT PLANT — YAVAPAI CO. AZ

100% ISSUED FOR BID

PREPARED BY: TAYLOR B. PIERCE R.C.E. 70097 DATE

PACE
Advanced Water Engineering
8723 E. VIA DE VENTURA, SUITE A, SCOTTSDALE, CA 85258
P: (480) 991-3595 | www.pacewater.com

SHEET I1.5
99 OF 99 SHEETS

JOB NO. B614

W:\B614\Engineering\B614-30sheets\B614I1.1.dwg - Tab: I1.5 - by neddington on 11/17/25 at 8:55:57 AM

BID FORM FOR CONSTRUCTION CONTRACT
ADDENDUM 2 VERSION

Contractor Name: _____

The terms used in this Bid with initial capital letters have the meanings stated in the Instructions to Bidders, the General Conditions, and the Supplementary Conditions.

ARTICLE 1—OWNER AND BIDDER

1.01 This Bid is submitted to:

Town of Jerome
Submitted electronically via email to tpierce@pacewater.com. Alternatively, Bidder may submit a hard copy the Town of Jerome, 600 Clark Street, Jerome, AZ 86331.

The undersigned Bidder proposes and agrees, if this Bid is accepted, to enter into an Agreement with Owner in the form included in the Bidding Documents to perform all Work as specified or indicated in the Bidding Documents for the prices and within the times indicated in this Bid and in accordance with the other terms and conditions of the Bidding Documents.

ARTICLE 2—ATTACHMENTS TO THIS BID

2.01 The following documents are submitted with and made a condition of this Bid:

A. Required Bid security;

B. List of Proposed Subcontractors;

~~C. List of Proposed Suppliers;~~

D. Evidence of authority to do business in the state of the Project; or a written covenant to obtain such authority within the time for acceptance of Bids;

E. Contractor's license number as evidence of Bidder's State Contractor's License or a covenant by Bidder to obtain said license within the time for acceptance of Bids;

F. Required Bidder Qualification Statement with supporting data; ~~and~~

G. If Bid amount exceeds $10,000, signed Compliance Statement (RD 400-6). Refer to specific equal opportunity requirements set forth in the Supplementary Conditions of the Construction Contract (EJCDC C-800);

H. If Bid amount exceeds $25,000, signed Certification Regarding Debarment, Suspension, Ineligibility and Voluntary Exclusion - Lower Tier Covered Transactions (AD-1048);

I. If Bid amount exceeds $100,000, signed RD Instruction 1940-Q Exhibit A-1, Certification for Contracts, Grants, and Loans.

ARTICLE 3—BASIS OF BID—LUMP SUM BID AND UNIT PRICES

3.01 *Lump Sum Bids*

A. Bidder will complete the Work in accordance with the Contract Documents for the following lump sum (stipulated) price(s), together with any Unit Prices indicated in Paragraph 3.02:

Copyright© 2018 National Society of Professional Engineers, American Council of Engineering Companies, and American Society of Civil Engineers. All rights reserved.

1. Lump Sum Price (Base Bid and Alternates)

BASE BID LUMP SUM BREAKDOWN					
	Item Description	**Unit**	**Estimated Qty**	**Bid Unit Price**	**Total Bid Price**
1	**ACCESS ROAD & SITE WORK**				
1.1	SWPPP	LS	1	$	$
1.2	Access Road (cut, grading, paving)	CY	3,672	$	$
1.3	Roadway Appurtenance (guardrail, gates, catch basins)	LS	1	$	$
1.4	Traffic Control	LS	1	$	$
2	**12" SEWER LINE IMPROVEMENTS**				
2.1	12" FPVC New Sewer Main	LF	149	$	$
2.2	Sewer Road Alignment Cut to Fill	CY	498	$	$
2.3	48" Manholes	EA	2	$	$
2.4	Bypass Plumbing and Equipment	LS	1	$	$
3	**TREATMENT PLANT SITE**				
3.1	Survey, Staking & Materials Testing	LS	1	$	$
3.2	Clearing & Grubbing	LS	1	$	$
3.3	Earthwork (Shoring, Erosion Control & Final Site Grading)	LS	1	$	$
3.4	Earthwork (Excavation, Fill & Backfill)	CY	1,628	$	$
3.5	Yard Piping	LS	1	$	$

Copyright© 2018 National Society of Professional Engineers, American Council of Engineering Companies, and American Society of Civil Engineers. All rights reserved.

BASE BID LUMP SUM BREAKDOWN					
	Item Description	**Unit**	**Estimated Qty**	**Bid Unit Price**	**Total Bid Price**
3.6	Fencing	LF	150	$	$
3.7	Blower / Admin Building	SF	528	$	$
3.8	Reed Bed Conversion to Drying Beds	LS	1	$	$
3.9	Wetland Cells Conversion to Emergency Overflow	LS	1	$	$
3.10	Retaining Walls	LF	295	$	$
3.11	Structural Concrete (SBR Tanks, Site, Chlorine Contact Channel)	CY	275	$	$
3.12	SBR Equipment	LS	1	$	$
3.13	Headworks Equipment	LS	1	$	$
3.14	Sludge Bagging Unit	LS	1	$	$
3.15	Polymer Dosing System	LS	1	$	$
3.16	Sludge Feed Pump	LS	1	$	$
3.17	Shade Structure	LS	1	$	$
3.18	Disinfection & Miscellaneous Equipment	LS	1	$	$
3.19	Site Electrical and Standby Generator	LS	1	$	$

Copyright© 2018 National Society of Professional Engineers, American Council of Engineering Companies, and American Society of Civil Engineers. All rights reserved.

BASE BID LUMP SUM BREAKDOWN					
	Item Description	**Unit**	**Estimated Qty**	**Bid Unit Price**	**Total Bid Price**
3.20	Upgrade Site to 3 Phase Power	LS	1	$	$
4	**OTHER**				
4.1	Mobilization/Demobilization	LS	1	$	$
4.2	Taxes	LS	1	$	$
				TOTAL BASE BID LUMP SUM AMOUNT	$

BID ALTERNATES LUMP SUM BREAKDOWN					
NEW 12" SEWER AND ACCESS ROAD					
	Item Description	**Unit**	**Estimated Qty**	**Bid Unit Price**	**Total Bid Price**
1	**Bid Adder:** 12" FPVC New Sewer Main	LF	1,660	$	$
2	**Bid Adder:** Restore Lateral Connections	EA	5	$	$
3	**Bid Adder:** Sewer Road Alignment Cut to Fill	CY	4,010	$	$
4	**Bid Adder:** 48" Manholes	EA	10	$	$
5	**Bid Adder:** Rockfall Barrier	LF	150	$	$
				TOTAL ALTERNATES LUMP SUM AMOUNT	

Copyright© 2018 National Society of Professional Engineers, American Council of Engineering Companies, and American Society of Civil Engineers. All rights reserved.

TOTAL LUMP SUM PRICE (BASE BID AND ALTERNATES)		
	Item Description	**Total Bid Price**
1	Total Lump Sum for Base Bid	$
2	Total Lump Sum for Bid Adder: New 12" Sewer and Access Road	$
	TOTAL LUMP SUM BASE BID AND ALTERNATES PRICE	$

B. All specified cash allowance(s) are included in the price(s) set forth below, and have been computed in accordance with Paragraph 13.02 of the General Conditions.

TOTAL ALLOWANCE PRICE		
	Item Description	**Total Bid Price**
1	Materials Testing	$
	TOTAL ALLOWANCE PRICE	$

ARTICLE 4—DELETED

ARTICLE 5—DELETED

ARTICLE 6—TIME OF COMPLETION

6.01 Bidder agrees that the Work will be substantially complete and will be completed and ready for final payment in accordance with Paragraph 15.06 of the General Conditions on or before the dates or within the number of calendar days indicated in the Agreement.

6.02 **[Deleted]**

6.03 **[Deleted]**

6.04 Bidder accepts the provisions of the Agreement as to liquidated damages.

ARTICLE 7—BIDDER'S ACKNOWLEDGEMENTS: ACCEPTANCE PERIOD, INSTRUCTIONS, AND RECEIPT OF ADDENDA

7.01 *Bid Acceptance Period*

A. This Bid will remain subject to acceptance for 60 days after the Bid opening, or for such longer period of time that Bidder may agree to in writing upon request of Owner.

Copyright© 2018 National Society of Professional Engineers, American Council of Engineering Companies, and American Society of Civil Engineers. All rights reserved.

7.02 *Instructions to Bidders*

A. Bidder accepts all of the terms and conditions of the Instructions to Bidders, including without limitation those dealing with the disposition of Bid security.

7.03 *Receipt of Addenda*

A. Bidder hereby acknowledges receipt of the following Addenda:

Addendum Number	Addendum Date

7.04 **[Deleted]**

ARTICLE 8—BIDDER'S REPRESENTATIONS AND CERTIFICATIONS

8.01 *Bidder's Representations*

A. In submitting this Bid, Bidder represents the following:

1. Bidder has examined and carefully studied the Bidding Documents, including Addenda.

2. **[Deleted]**

3. Bidder is familiar with all Laws and Regulations that may affect cost, progress, and performance of the Work**, including all American Iron and Steel requirements.**

4. Bidder has carefully studied the reports of explorations and tests of subsurface conditions at or adjacent to the Site and the drawings of physical conditions relating to existing surface or subsurface structures at the Site that have been identified in the Supplementary Conditions, with respect to the Technical Data in such reports and drawings.

5. Bidder has carefully studied the reports and drawings relating to Hazardous Environmental Conditions, if any, at or adjacent to the Site that have been identified in the Supplementary Conditions, with respect to Technical Data in such reports and drawings.

6. Bidder has considered the information known to Bidder itself; information commonly known to contractors doing business in the locality of the Site; information and observations obtained from visits to the Site; the Bidding Documents; and the Technical Data identified in the Supplementary Conditions or by definition, with respect to the effect of such information, observations, and Technical Data on (a) the cost, progress, and performance of the Work; (b) the means, methods, techniques, sequences, and procedures of construction to be employed by Bidder, if selected as Contractor; and (c) Bidder's (Contractor's) safety precautions and programs.

7. Based on the information and observations referred to in the preceding paragraph, Bidder agrees that no further examinations, investigations, explorations, tests, studies,

Copyright© 2018 National Society of Professional Engineers, American Council of Engineering Companies, and American Society of Civil Engineers. All rights reserved.

or data are necessary for the performance of the Work at the Contract Price, within the Contract Times, and in accordance with the other terms and conditions of the Contract.

8. Bidder is aware of the general nature of work to be performed by Owner and others at the Site that relates to the Work as indicated in the Bidding Documents.

9. Bidder has given Engineer written notice of all conflicts, errors, ambiguities, or discrepancies that Bidder has discovered in the Bidding Documents, and of discrepancies between Site conditions and the Contract Documents, and the written resolution thereof by Engineer is acceptable to Contractor.

10. The Bidding Documents are generally sufficient to indicate and convey understanding of all terms and conditions for performance and furnishing of the Work.

11. The submission of this Bid constitutes an incontrovertible representation by Bidder that without exception the Bid and all prices in the Bid are premised upon performing and furnishing the Work required by the Bidding Documents.

8.02 *Bidder's Certifications*

A. The Bidder certifies the following:

1. This Bid is genuine and not made in the interest of or on behalf of any undisclosed individual or entity and is not submitted in conformity with any collusive agreement or rules of any group, association, organization, or corporation.

2. Bidder has not directly or indirectly induced or solicited any other Bidder to submit a false or sham Bid.

3. Bidder has not solicited or induced any individual or entity to refrain from bidding.

4. Bidder has not engaged in corrupt, fraudulent, collusive, or coercive practices in competing for the Contract. For the purposes of this Paragraph 8.02.A:

a. Corrupt practice means the offering, giving, receiving, or soliciting of anything of value likely to influence the action of a public official in the bidding process.

b. Fraudulent practice means an intentional misrepresentation of facts made (a) to influence the bidding process to the detriment of Owner, (b) to establish bid prices at artificial non-competitive levels, or (c) to deprive Owner of the benefits of free and open competition.

c. Collusive practice means a scheme or arrangement between two or more Bidders, with or without the knowledge of Owner, a purpose of which is to establish bid prices at artificial, non-competitive levels.

d. Coercive practice means harming or threatening to harm, directly or indirectly, persons or their property to influence their participation in the bidding process or affect the execution of the Contract.

Copyright© 2018 National Society of Professional Engineers, American Council of Engineering Companies, and American Society of Civil Engineers. All rights reserved.

BIDDER hereby submits this Bid as set forth above:

Bidder:

_____

(typed or printed name of organization)

By: _____

(individual's signature)

Name: _____

(typed or printed)

Title: _____

(typed or printed)

Date: _____

(typed or printed)

If Bidder is a corporation, a partnership, or a joint venture, attach evidence of authority to sign.

Attest: _____

(individual's signature)

Name: _____

(typed or printed)

Title: _____

(typed or printed)

Date: _____

(typed or printed)

Address for giving notices:

_____

_____

Bidder's Contact:

Name: _____

(typed or printed)

Title: _____

(typed or printed)

Phone: _____

Email: _____

Address:

_____

_____

_____

Bidder's Contractor License No.: (if applicable) _____

Copyright© 2018 National Society of Professional Engineers, American Council of Engineering Companies, and American Society of Civil Engineers. All rights reserved.

TOWN OF JEROME

YAVAPAI COUNTY, ARIZONA

WASTEWATER TREATMENT PLANT

100% ISSUED FOR BID

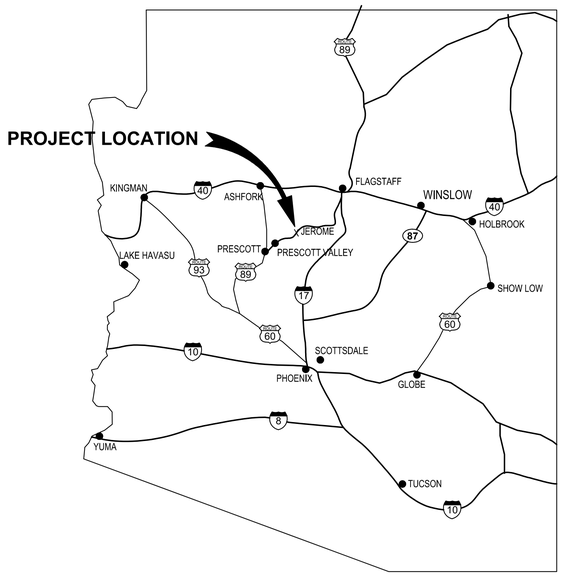

LOCATION MAP
N.T.S.

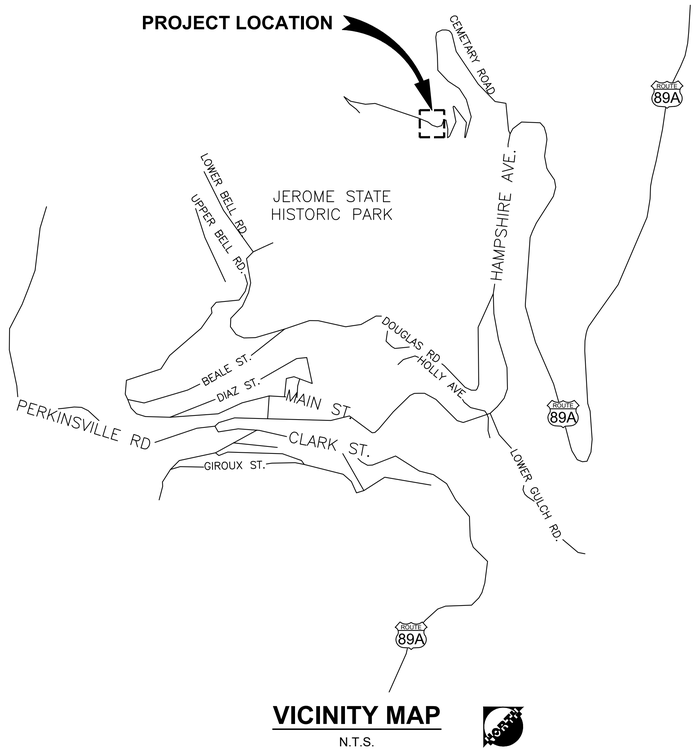

VICINITY MAP
N.T.S.

SURVEY DETAILS:

1. COORDINATES WERE VERIFIED IN THE FIELD USING REAL TIME KINEMATIC GPS OBSERVATIONS RELATIVE TO PUBLISHED CONTROL POINTS.
2. SURVEYED DURING THE MONTH OF DECEMBER 2022.
3. CONTRACTOR SHALL VERIFY HORIZONTAL AND VERTICAL CONTROLS IN THE FIELD PRIOR TO CONSTRUCTION.
4. PROJECT METADATA:
   - UNITS:
     COORDINATES, DISTANCE AND ELEVATIONS ARE SHOWN IN INTERNATIONAL FEET.
   - HORIZONTAL DATUM (BASIS OF BEARINGS):
     NAD83 (2011 Epoch) ARIZONA CENTRAL ZONE
   - VERTICAL DATUM:
     NAVD '88
   - PROJECT BENCHMARK:
     POINT NUMBER 1
     PRIMARY BENCHMARK DESCRIBED AS: SET 1/2" REBAR
     SET REBAR WITH OPUS PROCESSED SOLUTION:
     GRID NORTHING = 1365466.36
     GRID EASTING = 643466.42
     OPUS ELEVATION = 4827.11
5. THE COORDINATES PRESENTED ARE SHOWN TO THREE DECIMAL PLACES FOR CALCULATION PURPOSES AND ARE NOT REPRESENTATIVE OF THE PRECISION OF THE SURVEY MEASUREMENTS.
6. THIS NOT A PROPERTY BOUNDARY SURVEY.

PROJECT ADDRESS:

TOWN OF JEROME WASTEWATER TREATMENT PLANT
SEWER PLANT ROAD
JEROME, AZ 86331

PRINCIPAL OWNER:

TOWN OF JEROME
600 CLARK STREET, P.O. BOX 335
JEROME, AZ 86331

GEODETIC CONTROL:

PT	NORTHING	EASTING	ELEVATION
1	1365466.36	643466.42	4827.11
2	1365826.06	643587.50	4801.17
3	1365527.64	643545.12	4815.50
4	1364201.32	642110.19	4832.28
5	1364259.41	642191.45	4827.73
6	1365024.28	642592.65	4654.33

CONSULTANTS:

ENGINEER OF RECORD

PACIFIC ADVANCED CIVIL ENGINEERING (PACE)
8723 E. VIA de COMMERCIO, #A204
SCOTTSDALE, AZ 85258
BUSINESS LICENSE NO. 1006013
(480) 991-3595
CONTACT: TAYLOR PIERCE, P.E.
CONTACT: MIKE KREBS, P.E.

CIVIL ENGINEER
SEC ENGINEERING
825 COVE PARKWAY
COTTONWOOD, AZ 86326
(928) 282-7787
CONTACT: KRISHAN GINIGE

STRUCTURAL ENGINEER:
PK ASSOCIATES
6900 E. BELLEVIEW AVENUE, SUITE 200
GREENWOOD VILLAGE, CO 80111
(720) 799-1053
CONTACT: JAMES APPLEYARD

ELECTRICAL ENGINEER:
WRIGHT ENGINEERING
165 E. CHILTON DRIVE
CHANDLER, AZ 85225
(480) 497-5829
CONTACT: JACOB BIELEFELDT

FINAL DESIGN APPROVAL:

BY: Brett Kai DATE: 4/21/2026
TOWN MANAGER
THE TOWN APPROVES THESE PLANS FOR CONCEPT ONLY AND IS NOT LIABLE FOR ERRORS OR OMISSIONS

RECORD DRAWING:

THESE RECORD DRAWINGS HAVE BEEN PREPARED BASED ON INFORMATION PROVIDED BY THE CONSTRUCTION CONTRACTOR. THE ENGINEER HAS INSPECTED THE COMPLETED FACILITIES AND CERTIFIES THAT THEY ARE A SUBSTANTIALLY ACCURATE PRESENTATION OF THE LAYOUT AND CONDITION OF THE CONSTRUCTED PROJECT.

NAME _____(SEAL)
REGISTRATION NO. _____ DATE _____
REVD. BY: _____
FIELD ENGINEERING

100% ISSUED FOR BID
PREPARED BY: TAYLOR B. PIERCE R.C.E 70097 DATE

PACE
Advanced Water Engineering
8723 E. VIA de COMMERCIO, SUITE A, SCOTTSDALE, CA 85258
P. (480) 991-3595 | www.pacewater.com

NO	BY	DATE	REVISIONS	DATE	APP.

Registered Professional Engineer (Civil)
CERTIFICATE NO. 70097
Taylor B. Pierce
Signed
ARIZONA, U.S.A.
Expires 12/31/28

THESE DRAWINGS ARE THE PROPERTY OF P.A.C.E. AND SHALL NOT BE REPRODUCED IN ANY MANNER NOR BE USED FOR CONSTRUCTION UNLESS STAMPED 'ISSUED FOR CONSTRUCTION'.

PREPARED BY: PACE
DESIGNED BY: NE
DRAWN BY: DS, WW
CHECKED BY: TP
SCALE: AS NOTED
DATE: NOV 2025
JOB NO. B614

TITLE: TITLE SHEET

JOB: TOWN OF JEROME WASTEWATER TREATMENT PLANT — YAVAPAI CO. AZ

SHEET
G1.0
1 OF 99 SHEETS

JOB NO. B614

W:\B614\Engineering\B614-30\sheets\B614 - G1.0 TITLE SHEET.dwg - Tab: G1.0 - by nsddrigton on 04/21/26 at 12:17:57 PM

SHEET INDEX

DWG No.	SHT No.	TITLE
GENERAL		
1	G1.0	TITLE SHEET
2	G1.1	SHEET INDEX
3	G2.0	GENERAL NOTES AND ABBREVIATIONS
4	G3.0	HYDRAULIC PROFILE
5	G3.1	HYDRAULIC PROFILE
6	G3.2	PROCESS FLOW DIAGRAM
CIVIL		
7	C-1.0	NOTES
8	C-1.1	NOTES 2, LEGENDS, ABBREVIATIONS
9	C-1.2	TYPICAL SECTIONS
10	C-2.0	GRADING SITE MAP, SURVEY CONTROL
11	C-2.1	WWTP SITE GRADING-10SC
12	C-2.2	NORTH DR IMPROVEMENTS
13	C-2.3	WWTP ACCESS RD P&P 25+00+TO 30+00
14	C-2.4	WWTP ACCESS RD P&P 30+00 TO 35+00
15	C-2.5	WWTP ACCESS RD P&P 35+00 TO 37+50
16	C-2.6	WWTP ACCESS RD P&P 37+50 TO 39+75
17	C-2.7	NEW SEWER ACCESS ROAD
18	C-3.0	NEW SEWER SITE MAP, SURVEY CONTROL
19	C-3.1	NEW SEWER P&P
20	C-4.0	ALT SEWER SITE MAP, SURVEY CONTROL
21	C-4.1	ALT SEWER P&P 10+00 TO 15+25
22	C-4.2	ALT SEWER P&P 15+25 TO 20+50
23	C-4.3	ALT SEWER P&P 15+25 TO 20+50
24	C-4.4	ALT SEWER WEST TURNAROUND
25	C-4.5	ALT SEWER LATERAL PROFILES
MECHCANICAL		
26	M1.0	EXISTING SITE PLAN
27	M1.1	DEMOLITION PLAN PH-I
28	M1.2	DEMOLITION PLAN PH-II
29	M2.0	PROPOSED SITE PLAN
30	M2.1	YARD PIPING & GRADING PLAN
31	M2.2	YARD PIPING
32	M2.3	YARD PIPING
33	M2.4	YARD PIPING
34	M2.5	PLAN & PROFILE
35	M3.0	SBR MECHANICAL PLAN
36	M3.1	SBR MECHANICAL PLAN
37	M3.2	SBR MECHANICAL SECTIONS
38	M4.0	DEWATERING & CCC MECH PLAN
39	M4.1	CHLORINE CONTACT BASIN SECTION
40	M4.2	DEWATERING SECTION
41	M5.0	SLUDGE DRYING BEDS PLAN
42	M5.1	SLUDGE DRYING BEDS SECTIONS
43	M5.2	DRYING BED LIFT STATION SECTIONS
44	M6.0	EMERGENCY OVERFLOW BASIN PLAN AND SECTIONS
45	M7.0	BLOWER OPS PLAN
46	M8.0	MECHANICAL DETAILS I
47	M8.1	MECHANICAL DETAILS II
48	M8.2	MECHANICAL DETAILS III
49	M8.3	MECHANICAL DETAILS IV
50	M8.4	MECHANICAL DETAILS V
51	M8.5	MECHANICAL DETAILS VI
STRUCTURAL		
52	S1.1	GENERAL STRUCTURAL NOTES
53	S1.2	GENERAL STRUCTURAL NOTES
54	S1.3	TYPICAL DETAILS
55	S1.4	TYPICAL DETAILS
56	S1.5	TYPICAL DETAILS
57	S1.6	TYPICAL DETAILS
58	S1.7	TYPICAL DETAILS
59	S2.0	FOUNDATION PLAN
60	S2.01	FRAMING PLAN
61	S2.10	FRAMING PLAN
62	S3.1	FOUNDATION DETAILS
63	S3.2	FOUNDATION DETAILS
64	S3.3	FOUNDATION DETAILS
65	S4.1	FRAMING DETAILS
66	S4.2	FRAMING DETAILS

ARCHITECTURAL		
67	A1.0	BLOWER OPS ARCH PLAN
68	A2.0	BLOWER OPS ARCH REFLECTED CEILING PLAN
69	A3.0	BLOWER OPS ARCH SEWER & PLUMBING PLAN
70	A4.0	BLOWER OPS ARCH ELEVATIONS & SECTIONS
ELECTRICAL		
71	E1.1	ELECTRICAL COVER SHEET
72	E1.2	ELECTRICAL LEGEND
73	E2.1	SINGLE LINE DIAGRAM I
74	E2.2	SINGLE LINE DIAGRAM II
75	E2.3	LOAD CALCULATIONS
76	E2.4	WIRE & COND TABLES I
77	E2.5	WIRE & COND TABLES II
78	E3.1	ELECTRICAL PROPOSED SITE PLAN
79	E3.2	ELECTRICAL SBR PLAN
80	E3.3	ELECTRICAL DEWATERING PAD
81	E3.4	ELECTRICAL BLOWER OPS
82	E3.5	ELECTRICAL DRYING BED LIFT STATION
83	E3.6	ELECTRICAL OVERFLOW BASIN
84	E4.1	ELECTRICAL DETAILS I
85	E4.2	ELECTRICAL DETAILS II
86	E4.3	ELECTRICAL DETAILS III
87	E4.4	ELECTRICAL DETAILS IV
88	E4.5	ELECTRICAL DETAILS V
89	E4.6	ELECTRICAL DETAILS VI
90	E5.1	ELECTRICAL SCHEMATICS I
91	E5.2	ELECTRICAL SCHEMATICS II
92	E5.3	ELECTRICAL SCHEMATICS III
P&ID		
93	I0.0	P&ID GENERAL NOTES
94	I1.0	HEADWORKS
95	I1.1	SEQUENCING BATCH REACTOR
96	I1.2	CHLORINE CONTACT & DIGESTER
97	I1.3	BLOWER ROOM
98	I1.4	DEWATERING & LIFT STATIONS
99	I1.5	GENERATOR

LEGEND

- ASPHALT
- DECOMPOSED GRAVEL FILL
- CONCRETE
- SAND
- BACKFILL
- ENGINEERED BACKFILL
- DEMO
- EXISTING 1' CONTOUR
- CONSTRUCTION NOTES INCL. FITTINGS, VALVES & MISC. EQUIPMENT (SEE THE SAME SHT.)
- THRUST BLOCK
- EQUIPMENT

ABBREVIATIONS

AB	AGGREGATE BASE
AC	ASPHALT CONCRETE
A/C	AIR CONDITIONER
ADF	AVERAGE DAY FLOW
APPROX	APPROXIMATELY
ARCH	ARCHITECTURAL
ARV	AIR RELEASE VALVE
AUTO	AUTOMATIC
AUX	AUXILIARY
AVV	AIR VACUUM VALVE
AWS	ALARM WATER SURFACE
BO	BLOWOFF
BC	BEGINNING OF CURVE
BF	BLIND FLANGE
BLDG	BUILDING
BM	BEAM, BENCHMARK
BOD	BIOCHEMICAL OXYGEN DEMAND
BOS	BOTTOM OF SURFACE
BOT	BOTTOM
BVC	BEGIN VERTICAL CURVE
CATV	CABLE TELEVISION
CFH	CUBIC FOOT PER HOUR
CFM	CUBIC FOOT PER MINUTE
CFS	CUBIC FOOT PER SECOND
CH	CHUCK
CMU	CONCRETE MASONRY UNIT
CO	CLEANOUT
COTG	CLEANOUT TO GRADE
CONST	CONSTRUCTION
CPLG	COUPLING
CPVC	CHLORINATED POLYVINYL CHLORIDE
CTR	CENTER
CV	CHECK VALVE
CW	COLD WATER
CYL	CYLINDER
D	DRAIN
DAF	DISSOLVED AIR FLOATATION
DI	DROP INLET
DIA	DIAMETER
DIP	DUCTILE IRON PIPE
DO	DISSOLVED OXYGEN
DTL	DETAILS
DWG	DRAWING
E	ELECTRICAL
EA	EACH
EC	END OF CURVE
ECC	ECCENTRIC
EF	EACH FACE
EFF	EFFLUENT
EL	ELEVATION
EP	EDGE OF PAVEMENT
EQUIP	EQUIPMENT
EW	EACH WAY
EXH	EXHAUST
EX	EXISTING
FC	FLEXIBLE COUPLING
FD	FLOOR DRAIN
FF	FINISHED FLOOR
FG	FINISHED GROUND
FH	FIRE HYDRANT
FL	FLOW LINE
FLEX	FLEXIBLE
FLG	FLANGE
FM	FORCE MAIN
FPS	FEET PER SECOND
FS	FINISHED SLAB
FT	FEET
FUT	FUTURE
G	GAS
GA	GAUGE
GAL	GALLONS
GALV	GALVANIZED
GB	GRADE BREAK
GPD	GALLONS PER DAY
GPM	GALLONS PER MINUTE
H/A	HAND AUTOMATIC
HDPE	HIGH DENSITY POLYETHYLENE
HOA	HAND-OFF-AUTOMATIC
HORIZ	HORIZONTAL
HP	HIGH POINT
HWL	HIGH WATER LEVEL
HWS	HIGH WATER SURFACE
HZ	HERTZ
ID	INSIDE DIAMETER
I&C	INSTRUMENTATION & CONTROLS INTEGRATOR
IN	INCHES
INF	INFLUENT
IRR	IRRIGATION
INV	INVERT
JB	JUNCTION BOX
LBS	POUNDS
LBS/D	POUNDS PER DAY
LF	LINEAR FEET
LP	LOW PRESSURE
LWL	LOW WATER LEVEL
LWS	LOW WATER SURFACE
MAX	MAXIMUM
MCC	MOTOR CONTROL CENTER
MECH	MECHANICAL
MFR	MANUFACTURER
MGD	MILLION GALLONS PER DAY
MG/L	MILLIGRAMS PER LITER
MH	MANHOLE OR MAINTENANCE HOLE
MIN	MINIMUM, MINUTE
MISC	MISCELLANEOUS
MJ	MECHANICAL JOINT
MLSS	MIXED LIQUOR SUSPENDED SOLIDS
MMADF	MAX MONTH AVERAGE DAY FLOW
N	NORTHING
N/C	NORMALLY CLOSED
N/O	NORMALLY OPEN
NTS	NOT TO SCALE
NWL	NORMAL WATER LEVEL
NPSH	NET POSITIVE SUCTION HEAD
OC	ON CENTER
OD	OUTSIDE DIAMETER
PG	PRESSURE GAUGE
PI	POINT OF INTERSECTION
PO	PUSH ON
PP	POWER POLE, PIPE PENETRATION
PRFV	PRESSURE RELIEF VALVE
PRC	POINT OF REVERSE CURVE
PRV	PRESSURE REGULATING (REDUCING) VALVE
PS	PRESSURE SWITCH, PIPE SUPPORT
PSI	POUNDS PER SQUARE INCH
PV	PLUG VALVE
PVC	POLYVINYL CHLORIDE
PVMT	PAVEMENT
PW	POTABLE WATER
R	RADIUS
RAS	RETURN ACTIVATED SLUDGE
RED	REDUCER
REQ'D	REQUIRED
RPM	REVOLUTIONS PER MINUTE
RQMT	REQUIREMENT
R&R	REMOVE AND RELOCATE (REINSTALL)
R&S	REMOVE AND SAVE (SALVAGE)
R/W	RIGHT OF WAY
R&W	REMOVE AND WASTE
RW	RECLAIMED WATER
S	SLOPE
SS	SANITARY SEWER
SSMH	SANITARY SEWER MANHOLE
SBR	SEQUENCING BATCH REACTOR
SD	STORM DRAIN
SE	SECONDARY EFFLUENT
SEC	SECTION
SHT	SHEET
SOV	SHUT OFF VALVE
SPEC	SPECIFICATION
SQ	SQUARE
SS	STAINLESS STEEL
ST	STREET
STA	STATION
T&B	TOP AND BOTTOM
TB	THRUST BLOCK
TBA	TO BE ABANDONED
TDH	TOTAL DYNAMIC HEAD
TEL	TELEPHONE
TEMP	TEMPERATURE
TOS	TOP OF SLAB
TOW	TOP OF WALL
TYP	TYPICAL
UNO	UNLESS NOTED OTHERWISE
VAC	VOLTS ALTERNATING CURRENT
VDC	VOLTS DIRECT CURRENT
VERT	VERTICAL
VCP	VITRIFIED CLAY PIPE
W	WATER
WAS	WASTE ACTIVATED SLUDGE
W/O	WITHOUT
WS	WATER SURFACE

100% ISSUED FOR BID

NO	BY	DATE	REVISIONS	DATE	APP.

Registered Professional Engineer (Civil) CERTIFICATE NO. 70097 Timothy B. Pierce Signed 12/31/25 ARIZONA, U.S.A. Expires 12/31/28

THESE DRAWINGS ARE THE PROPERTY OF P.A.C.E. AND SHALL NOT BE REPRODUCED IN ANY MANNER NOR BE USED FOR CONSTRUCTION UNLESS STAMPED 'ISSUED FOR CONSTRUCTION'.

PREPARED BY: PACE
DESIGNED BY: NE
DRAWN BY: DS, WW
CHECKED BY: TP
SCALE: AS NOTED
DATE: NOV 2025
JOB NO.: B614

TITLE: SHEET INDEX

JOB: TOWN OF JEROME WASTEWATER TREATMENT PLANT
YAVAPAI CO. AZ

PREPARED BY: TAYLOR B. PIERCE
PACE Advanced Water Engineering
8723 E. Via de Ventura, Suite A-144, Scottsdale, CA 85258
P: (480) 991-3395 | www.pacewater.com
R.C.E 70097 DATE

SHEET G1.1
2 OF 99 SHEETS

JOB NO. B614

W:\B614\Engineering\B614-30\sheets\B614 - G1.0 TITLE SHEET.dwg - Tab: G1.1 - by reddington on 04/21/26 at 12:17:57 PM

GENERAL NOTES:

1. ALL PAVING, GRADING, PIPING, AND UTILITY LINE CONSTRUCTION WORK WITHIN THE PUBLIC RIGHT OF WAY, ON PRIVATE STREETS, ACCESS WAYS, LOT GRADING, MATERIALS, AND WORKMANSHIP SHALL COMPLY WITH TOWN OF JEROME ENGINEERING STANDARDS AND SPECIFICATIONS, AND SHALL CONFORM TO THE LATEST MARICOPA ASSOCIATION OF GOVERNMENTS (MAG) AND A.D.O.T. STANDARD DETAILS AND SPECIFICATIONS. GRADING WORK SHALL CONFORM TO MAG SPECIFICATIONS, THE SOILS REPORT, AND CHAPTER 70 ENTITLED "EXCAVATION AND GRADING" OF THE UNIFORM BUILDING CODE (UBC) LATEST EDITION, SUBSECTIONS 7001 TO 7005, 7009 TO 7013, FIGURES 70-1 AND 70-2 AND AS STATED THEREIN. LOCAL MUNICIPAL STANDARD DETAILS WILL CONTINUE TO APPLY WHERE NOT ADOPTED OR INCLUDED BY MAG. THE FOLLOWING NOTES AND SPECIFICATIONS ARE HEREBY MADE A PART OF THE CONTRACT DOCUMENTS AND PROJECT SPECIFICATIONS. WHERE THERE EXISTS A CONFLICT BETWEEN THESE NOTES, MAG SPECS, UBC, THE SOILS REPORT, OR THE PROJECT SPECIFICATIONS, THE MORE STRINGENT OF THE REQUIREMENTS SHALL GOVERN UNLESS PRIOR CLARIFICATION FROM THE ENGINEER HAS BEEN GIVEN IN WRITING TO THE CONTRACTOR. THE CONTRACTOR AS STATED HEREIN SHALL MEAN THE GENERAL CONTRACTOR AND HIS ASSOCIATED SUBCONTRACTORS. THE GENERAL CONTRACTOR IS RESPONSIBLE FOR THE COORDINATION AND PERFORMANCE OF THE WORK OF ALL HIS SUBCONTRACTORS AND SUPPLIERS.
2. ALL WORK SHALL BE BID AND INSTALLED BY THE CONTRACTOR COMPLETE AND OPERATIONAL TO LINES, GRADES, AND FUNCTIONS INDICATED ON ALL PLANS AND SPECIFICATIONS. THE CONTRACTOR SHALL PROVIDE ALL LABOR, MATERIALS, EQUIPMENT, AND SERVICES NECESSARY TO COMPLETE ALL PROJECT EARTHWORK AND SITE WORK INCLUDING BUT NOT LIMITED TO: SITE CLEARING, GRUBBING, DEMOLITION, DEBRIS REMOVALS FROM THE SITE, IMPORT AND/OR EXPORT OF SOILS AND OTHER MATERIALS TO AND FROM THE SITE, BORROW MATERIALS, TEMPORARY SOILS MATERIAL STOCKPILING, BACKFILL OF ONSITE BORROW PITS, MOVING OF MATERIALS, CUT AND FILL, SLOPES, SOILS AND BANK STABILIZATION AND PROTECTION, BERMING, ROADWAY EXCAVATIONS, RELOCATIONS, STRUCTURE EXCAVATIONS, TRENCHING, ALL BACKFILLING, SITE GRADING, PAVING, PIPING, UTILITY LINE AND STORM DRAINAGE CONSTRUCTION, CURBS, SITE CONCRETE WORK AND OTHER MISCELLANEOUS SITE WORK STRUCTURES AND ITEMS INDICATED ON THE PLANS AND IN THE CONTRACT DOCUMENTS.
3. ANY QUANTITIES SHOWN ON PLANS ARE NOT VERIFIED BY THE ENGINEER. QUANTITIES ARE APPROXIMATE ONLY AND INTENDED AS A GUIDE FOR ESTIMATING PURPOSES. THE CONTRACTOR IS RESPONSIBLE FOR PROVIDING HIS OWN QUANTITY TAKE OFFS. THE CONTRACTOR SHALL VISIT THE SITE AND REVIEW THE SOILS CONDITIONS AND THE SOILS REPORT WITH THE PROJECT SOILS ENGINEER PRIOR TO BIDDING THIS PROJECT. ANY DISCREPANCIES IN SITE MATERIALS SHALL BE BROUGHT TO THE ATTENTION OF THE DESIGN ENGINEER 7 DAYS MINIMUM PRIOR TO BIDDING FOR REVIEW. ALL SHRINK OF EARTH MATERIAL OR EXCESS MATERIAL FROM UTILITY TRENCHES AND FOUNDATIONS SHALL BE INCLUDED IN THE CONTRACTOR'S BID.
4. THE ENGINEER WILL NOT BE RESPONSIBLE FOR CONSTRUCTION MEANS, METHODS, TECHNIQUES, SEQUENCES, OR PROCEDURES OR FOR SAFETY PRECAUTIONS OR PROGRAMS UTILIZED IN CONNECTION WITH THE WORK, AND HE WILL NOT BE RESPONSIBLE FOR THE CONTRACTOR'S FAILURE TO CARRY OUT THE WORK IN ACCORDANCE WITH THE CONTRACT DOCUMENTS.
5. THE CONTRACTOR SHALL BE RESPONSIBLE FOR VERIFYING THE LIMITS OF THE WORK AREA FOR ALL PHASES OF THE WORK PRIOR TO BEGINNING CONSTRUCTION OF THOSE PHASES. ALL CONSTRUCTION LIMITS, AREAS OF WORK, SETBACKS, PERIMETERS, ADJACENT PROPERTY LINES, BOUNDARIES, AND OTHER CRITERIA DEFINING THE LIMITS OF THE CONTRACTOR'S WORK AREA AND LIMITS SHALL BE STAKED BY THE CONTRACTOR'S SURVEYOR PRIOR TO CONSTRUCTION OF CLEARING OF THE SITE. THE CONTRACTOR SHALL BE RESPONSIBLE FOR FAMILIARIZING HIMSELF WITH THE EXTENT OF WORK TO BE DONE IN EACH SEPARATE PHASE OF THE PROJECT, AND ANY WORK NECESSARY IN INACTIVE PHASES REQUIRED TO DEEM THE ACTIVE PHASES FINISHED, SAFE, AND SERVICEABLE.
6. THE DESIGN ENGINEER RESERVES THE RIGHT TO MAKE MINOR FIELD MODIFICATIONS TO GRADES AND STRUCTURE DESIGNS TO ACCOMMODATE FIELD CONDITIONS FOUND ON THE SITE. THIS INCLUDES BUT IS NOT LIMITED TO MINOR MODIFICATIONS TO GRADE, ALIGNMENT, SLOPE, OR STRUCTURE LOCATIONS. THE ENGINEER SHALL HAVE THE RIGHT TO MAKE SUCH CHANGES IN WRITING IN THE LOCATION AND QUANTITIES OF WORK AS MAY BE DEEMED ADVISABLE.
7. NO JOB WILL BE CONSIDERED COMPLETE UNTIL FINAL GRADING IS COMPLETE AND ALL CURBS, PAVEMENT, AND SIDEWALKS HAVE BEEN SWEPT CLEAN OF ALL DIRT AND DEBRIS, ALL SURVEY MONUMENTS ARE INSTALLED AND ALL VALVES, MANHOLES, AND BOXES HAVE BEN ADJUSTED ACCORDING TO THE PLANS AND STANDARD DETAILS.
8. SEE SPECIFICATION SECTION 01 11 00 SUMMARY OF WORK FOR DIVISION OF RESPONSIBILITY. SEE SPECIFICATION SECTION 00 70 00 CONDITIONS OF THE CONTRACT FOR DEFINITIONS.
9. ALL CONSTRUCTION SHALL BE IN ACCORDANCE WITH UNITED STATES ENVIRONMENTAL PROTECTION AGENCY STANDARDS AND POLICIES AND CURRENT SUPPLEMENTS THERETO.
10. ANY WORK PERFORMED WITHOUT THE APPROVAL OF THE ENGINEER AND/OR ALL WORK AND MATERIAL NOT IN CONFORMANCE WITH THE SPECIFICATIONS IS SUBJECT TO REMOVAL AND REPLACEMENT AT THE CONTRACTOR'S EXPENSE.
11. DEBRIS SHALL BE DISPOSED OF WITHIN APPROVED DISPOSAL FACILITIES.
12. THE CONTRACTOR SHALL PROVIDE ADEQUATE MEANS FOR CLEANING TRUCKS AND/OR OTHER EQUIPMENT OF MUD PRIOR TO ENTERING PUBLIC STREETS. IT IS THE CONTRACTOR'S RESPONSIBILITY TO CLEAN STREETS, ALLEY DUST, AND TAKE WHATEVER MEASURES ARE NECESSARY TO ENSURE THAT ALL ADJACENT ROADS ARE MAINTAINED IN A CLEAN, MUD AND DUST FREE CONDITION AT ALL TIMES.
13. CONTRACTOR SHALL TAKE MEASURES TO CONTROL DUST AND FUGITIVE EMISSIONS, INCLUDING BUT NOT LIMITED TO WATERING THE SITE TWICE DAILY DURING GRADING TO CONTROL DUST.
14. AN APPROVED SET OF PLANS SHALL BE ON THE JOB SITE AT ALL TIMES WORK IS IN PROGRESS. DEVIATION FROM THE PLANS WILL NOT BE ALLOWED WITHOUT AN APPROVED PLAN REVISION OR AUTHORIZATION FROM THE ENGINEER.
15. THESE DRAWINGS INDICATE THE GENERAL EXTENT OF THE REQUIRED WORK AND ARE NOT INTENDED TO INDICATE EVERY ELEMENT REQUIRED. THE CONTRACTOR SHALL FURNISH ALL ELEMENTS TO COMPLETE THE SCOPE OF WORK IN ACCORDANCE WITH THE CONTRACT DOCUMENTS. ALL ITEMS REQUIRING CLARIFICATIONS SHALL BE SUBMITTED AS A "REQUEST FOR INFORMATION" (RFI) TO THE ENGINEER PER SECTION 01 31 00 OF THE SPECIFICATIONS.
16. ALL CONSTRUCTION VEHICLES OR EQUIPMENT, MOBILE OR FIXED OPERATED, SHALL BE EQUIPPED WITH PROPERLY OPERATING AND MAINTAINED MUFFLERS IN ACCORDANCE WITH THE LOCAL NOISE ORDINANCES.
17. THE CONTRACTOR SHALL PROVIDE SHOP DRAWINGS FOR THE ENGINEER'S REVIEW, AS MAY BE NECESSARY FOR THE EXECUTION OF THE WORK AND AS REQUIRED BY THE DRAWINGS AND SPECIFICATIONS.
18. DUE TO THE ONGOING OPERATION OF THE FACILITY, CONTRACTOR SHALL PROVIDE A SEQUENCE OF CONSTRUCTION FOR TOWN AND ENGINEER'S APPROVAL. TWO WEEKS PRIOR TO THE START OF CONSTRUCTION THE SEQUENCE SHALL INCLUDE A DETAILED SCHEDULE OF EVENTS AND TIMEFRAME. ALL EQUIPMENT, PIPING, LABOR, ETC. FOR THE SEQUENCE SHALL BE THE RESPONSIBILITY OF THE CONTRACTOR. ALL TEMPORARY SHUTDOWNS AND CHANGES IN FACILITY OPERATION SHALL BE DISCLOSED TO OWNER AT LEAST 7 DAYS PRIOR.
19. PAVEMENT REPAIR, AS REQUIRED, MAY BE WITH COLD-MIX ASPHALT CONCRETE, WITH A MINIMUM THICKNESS OF 2 INCHES, USING AGGREGATE GRADING IN ACCORDANCE WITH MARSHALL MIX DESIGN OF SECTION 710 OF MAG UNIFORM STANDARD SPECIFICATIONS AND DETAILS FOR PUBLIC WORK CONSTRUCTION.
20. ALL CONSTRUCTION WORK SHALL BE PERFORMED IN ACCORDANCE WITH THE SOILS AND/OR GEOTECHNICAL REPORT PREPARED BY WESTERN TECHNOLOGIES, INC. DATED 10/25/2022. THIS REPORT IS SUPPLEMENTED BY 1) THESE PLANS AND SPECIFICATIONS, 2) YAVAPAI COUNTY PUBLIC WORKS STANDARDS AND SPECIFICATIONS, 3) STATE OF ARIZONA STANDARD DETAILS. IN THE EVENT OF CONFLICT, THE FORMER SHALL TAKE PRECEDENCE OVER THE LATTER. THE PERFORMANCE AND COMPLETION OF ALL WORK MUST BE TO THE SATISFACTION OF THE ENGINEER OF RECORD.

GENERAL CONSTRUCTION NOTES

ENGINEER'S NOTES

1. THE ENGINEER AND APPLICABLE AGENCY MUST APPROVE, PRIOR TO CONSTRUCTION, ANY ALTERATION TO OR VARIANCE FROM THESE PLANS. ANY VARIATION FROM THESE PLANS SHALL BE PROPOSED ON CONSTRUCTION FIELD PRINTS AND TRANSMITTED TO THE ENGINEER.
2. THE CONTRACTOR SHALL PROTECT AND MAINTAIN ALL EXISTING UTILITIES ON THE SITE. ANY DAMAGE TO EXISTING UTILITIES, WHETHER SHOWN OR NOT ON THE DRAWING SHALL BE REPAIRED/REPLACED AT THE CONTRACTOR'S EXPENSE. EXISTING SURFACE FEATURES AND FENCING SHALL BE REPLACED IN KIND.
3. ANY INSPECTION BY THE TOWN, COUNTY OR THE ENGINEER, SHALL NOT IN ANY WAY RELIEVE THE CONTRACTOR FROM ANY OBLIGATION TO PERFORM THE WORK IN STRICT COMPLIANCE WITH THE APPLICABLE CODES AND AGENCY REQUIREMENTS.
4. CONTRACTOR IS TO LOCATE ALL EXISTING PROPERTY MONUMENTS PRIOR TO CONSTRUCTION. NO EXISTING SURVEY MONUMENTATION SHALL BE REMOVED OR DISTURBED BY THE CONTRACTOR WITHOUT NOTIFICATION AND APPROVAL OF THE PROJECT SURVEYOR. THE CONTRACTOR SHALL CONTACT THE PROJECT SURVEYOR FOR THE SETTING OF REFERENCE POINTS 48 HOURS PRIOR TO DISTURBING OR REMOVING ANY MONUMENTS. A REGISTERED LAND SURVEYOR AT THE CONTRACTOR'S EXPENSE SHALL REPLACE ANY MONUMENTS DISTURBED DURING THE CONSTRUCTION OF THIS PROJECT.
5. NOTHING CONTAINED IN THE CONTRACT DOCUMENTS SHALL CREATE, NOR SHALL BE CONSTRUED TO CREATE, ANY CONTRACTUAL RELATIONSHIP BETWEEN THE ENGINEER AND THE CONTRACTOR OR ANY SUBCONTRACTOR.
6. ANY CONSTRUCTION WATER OBTAINED FROM THE TOWN WATER SOURCE WILL REQUIRE METER AND A BULK WATER PERMIT TO TRACK USAGE. THE TOWN WILL WAIVE FEES FOR PERMITTING AND USAGE IF USAGE IS LESS THEN 20,000 GALLONS. CONTACT THE TOWN OF JEROME AT (928) 634-7943 TO REQUEST A METER.
7. THE CONTRACTOR SHALL MAKE NO CLAIM AGAINST THE OWNER OR THE ENGINEER REGARDING ALLEGED INACCURACY OF CONSTRUCTION STAKES SET BY THE ENGINEER UNLESS ALL SURVEY STAKES SET BY THE ENGINEER ARE MAINTAINED INTACT AND CAN BE VERIFIED AS TO THEIR ORIGIN. IF, IN THE OPINION OF THE ENGINEER, THE STAKES ARE NOT MAINTAINED INTACT AND CANNOT BE VERIFIED AS TO THEIR ORIGIN, ANY REMEDIAL WORK REQUIRED TO CORRECT ANY ITEM OR IMPROPER CONSTRUCTION WORK IN THIS DEVELOPMENT SHALL BE PERFORMED AT THE SOLE EXPENSE OF THE RESPONSIBLE CONTRACTOR OR SUBCONTRACTOR.
8. TRAFFIC CONTROL SHALL BE MAINTAINED IN ACCORDANCE WITH THE TOWN OF JEROME MUNICIPAL CODES.
9. A PORTION OF THIS PROJECT SITE IS LOCATED WITHIN A DOCUMENTED 100-YR FEMA FLOODLAIN AS DESIGNATED ON THE PLANS.
10. IN CASES WHEN UNSTAKED EXISTING UTILITIES ARE ENCOUNTERED, SOME MINOR DEVIATION TO THE PROPOSED SEWER ALIGNMENT MAY BE ALLOWED TO MAINTAIN MINIMUM SEPARATION DISTANCES BETWEEN UTILITIES. ANY PROPOSED CHANGES TO THE ALIGNMENT MUST BE SUBMITTED TO THE TOWN'S REPRESENTATIVE FOR REVIEW. NO CHANGES WILL BE ALLOWED WITHOUT PROPER APPROVAL.
11. PRIOR TO BIDDING THE WORK, THE CONTRACTOR SHALL THOROUGHLY SATISFY HIMSELF AS TO THE ACTUAL CONDITIONS AND EARTHWORK QUANTITIES, IF ANY. NO CLAIM SHALL BE MADE AGAINST THE OWNER OR ENGINEER FOR ANY EXCESS OR DEFICIENCY THEREIN, ACTUAL OR RELATIVE.
12. THE ENGINEERS SHALL BE NOTIFIED BEFORE ANY ONSITE CONSTRUCTION BEGINS.
13. A SEPARATE PERMIT IS NECESSARY FOR ANY OFFSITE CONSTRUCTION.
14. APPROVAL OF THESE PLANS SHALL NOT PREVENT THE TOWN FROM REQUIRING CORRECTION OF ERRORS IN THE PLANS WHERE SUCH ERRORS ARE SUBSEQUENTLY FOUND TO BE IN VIOLATION OF ANY LAW OR ORDINANCE.

MECHANICAL CONSTRUCTION NOTES:

1. CONTRACTOR TO INSTALL PIPE SUPPORTS PER MANUFACTURER'S REQUIREMENTS AND SPECIFICATIONS. ALL DRY AREA PIPE SUPPORTS SHALL BE GALVANIZED STEEL U.N.O. ALL SUBMERGED PIPE SUPPORTS SHALL BE S.S. 316.
2. CONTRACTOR TO INSTALL PUMP BASE, GUIDE RAILS, AND BRACKETS PER MANUFACTURER'S REQUIREMENTS. CONTRACTOR SHALL CONFIRM SUPPLY OF PUMP MOUNTING EQUIPMENT WITH PUMP SUPPLIER.
3. ALL PROCESS PIPES SHALL BE COLOR COATED PER THE SPECIFICATIONS WITH THE EXCEPTION OF STAINLESS STEEL PIPES. ALL ABOVE GROUND PIPES SHALL ALSO BE OUTFITTED WITH A FLOW DIRECTION ARROW.
4. ALL ANCHORING/FASTENING SYSTEMS SHALL BE 316 S.S. REGARDLESS OF LOCATION, U.N.O.
5. CONTRACTOR SHALL SUBMIT SHOP DRAWINGS FOR REVIEW AND APPROVAL FOR EACH EQUIPMENT ITEM PRIOR TO INSTALLATION. INSTALLATION DETAILS FOR ALL EQUIPMENT ITEMS SHALL BE PER RESPECTIVE EQUIPMENT MANUFACTURER'S SHOP DRAWINGS AND RECOMMENDED INSTALLATION REQUIREMENTS.
6. ALL D.I.P. SHALL BE CLASS 350, UNLESS NOTED OTHERWISE.
7. ELEVATION OF EXISTING STRUCTURES, PIPING, AND COMPONENTS ARE APPROXIMATE. CONTRACTOR TO FIELD VERIFY PRIOR TO CONSTRUCTION.
8. PRECAST SUPPLIER TO PROVIDE STRUCTURAL CALCULATIONS STAMPED BY REGISTERED ENGINEER IN AZ TO DOCUMENT DESIGN OF PRECAST STRUCTURE.
9. GROOVE FITTINGS MAY BE USED IN LIEU OF FLANGE FITTINGS FOR ALL ABOVE GROUND D.I. PIPING.
10. CONTRACTOR SHALL BE RESPONSIBLE FOR ALL TEMPORARY PIPING AND EQUIPMENT NEEDED FOR PROCESS ISOLATION, BYPASS, AND TRANSITION.
11. ALL YARD PIPING SHALL BE SURVEYED FOR VERTICAL AND HORIZONTAL ALIGNMENT PRIOR TO BACKFILL.
12. ALL PIPE SUPPORTS SPACING SHALL MEET PIPING MANUFACTURER'S REQUIREMENTS.
13. STRUCTURAL DIMENSIONS CONTROLLED BY OR RELATED TO MECHANICAL OR ELECTRICAL EQUIPMENT SHALL BE VERIFIED BY THE CONTRACTOR AND REFLECTED ON SHOP DRAWING PRIOR TO CONSTRUCTION.
14. ALL PVC PIPE GREATER THAN 3" IN DIAMETER SHALL BE DIPS.
15. ALL EXPOSED PIPE SHALL INCLUDE HEAT TRACING AND INSULATION.
16. ALL NEW BURIED GRAVITY SEWER LINES AND FORCE MAINS SHALL BE INSTALLED WITH A MINIMUM 3' DEPTH OF EARTH COVER.

PERMITS

1. CONTRACTOR SHALL OBTAIN ALL PERMITS AT HIS OWN EXPENSE FROM LOCAL MUNICIPAL AND AIR POLLUTION CONTROL AUTHORITIES PRIOR TO BEGINNING CONSTRUCTION.
2. IT SHALL BE THE RESPONSIBILITY OF THE CONTRACTOR TO ARRANGE FOR THE RELOCATION AND RELOCATION COSTS, IF ANY, OF ALL UTILITIES, AND SUBMIT A UTILITY RELOCATION SCHEDULE TO THE MUNICIPALITY AND DESIGN ENGINEER PRIOR TO CONSTRUCTION. ALL PUBLIC UTILITY EQUIPMENT POLES, BOXES, STRUCTURES, AND MUNICIPAL UTILITY COMPANY EQUIPMENT SHALL BE RELOCATED BY THE APPROPRIATE UTILITY COMPANY OR MUNICIPALITY BEFORE ANY WORK IS STARTED.

RECORD DRAWINGS

1. ACCEPTANCE OF THE COMPLETED PAVING, GRADING, OR UTILITY INSTALLATION WILL NOT BE GIVEN UNTIL REPRODUCIBLE AS-BUILT PLANS HAVE BEEN SUBMITTED BY THE ENGINEER AND APPROVED BY THE LOCAL GOVERNING AGENCY.

OBSERVATION

1. THE CONTRACTOR SHALL CONTACT THE APPROPRIATE PUBLIC UTILITY COMPANIES FOR INSPECTION OF TRENCHING, BEDDING, AND BACKFILLING DONE IN CONJUNCTION WITH INSTALLATION OF THOSE UTILITIES ON THIS PROJECT.
2. SOILS COMPACTION TEST RESULTS MUST BE SUBMITTED TO THE ENGINEER'S OFFICE FOR ALL FILL MATERIAL FOR ROADS, TRENCH BACKFILL, AND SITE FILL MATERIALS UNDER SLABS AND STRUCTURES. NO FILL MATERIALS SHALL BE PLACED WITHOUT TESTING DURING PLACEMENT. CONTRACTOR SHALL SUBMIT ALL TEST RESULTS TO THE DESIGN ENGINEER AND GOVERNMENTAL AGENCIES.
3. CONTRACTOR SHALL SUBMIT A SCHEDULE, APPROVED IN WRITING BY A QUALIFIED CONSULTING TESTING AGENCY, FOR FREQUENCY, LOCATION, AND TYPE OF ALL PROJECT TESTING. THE CONTRACTOR WILL BE RESPONSIBLE FOR SCHEDULING AND COORDINATION OF ALL TESTING INCLUDING THE FOLLOWING TERMS WHICH SHALL BE TESTED IN ACCORDANCE WITH MAG SPECIFICATIONS:
   - 3.1. SUBGRADE COMPACTION
   - 3.2. BASE COURSE COMPACTION
   - 3.3. ASPHALT PAVEMENT MIX DESIGN QUALITY
   - 3.4. CONCRETE STRENGTH
   - 3.5. TRENCH BEDDING AND BACKFILL
   - 3.6. TESTING FOR UTILITIES, PIPING, AND DRAINAGE SYSTEMS

UTILITIES

1. A UTILITY COORDINATION MEETING SHALL BE COORDINATED BY THE CONTRACTOR PRIOR TO THE START OF ANY WORK. ALL UTILITY ISSUES SHALL BE ADDRESSED IN ACCODANCE WITH MAG 105.6.
2. LOCATION OF UNDERGROUND UTILITIES SHALL BE ACCOMPLISHED IN ACCORDANCE WITH ARS 40-360.22 PRIOR TO ANY EXCAVATION. BLUE STAKE SHALL BE CALLED AT 1-800-STAKE-IT FOR ACCURATE LOCATION OF UTILITIES AS NECESSARY AND PRIOR TO AN EXCAVATION. UTILITIES IF INDICATED ON PLANS ARE APPROXIMATE LOCATIONS ONLY, TAKEN FROM THE UTILITY COMPANY MAPS. IF THE CONTRACTOR ENCOUNTERS ANY LINES NOT INDICATED ON THE DRAWINGS OR MARKED IN THE FIELD BY THE UTILITY COMPANY THAT MAY INTERFERE WITH HIS WORK, HE SHALL NOTIFY THE APPROPRIATE UTILITY COMPANY IMMEDIATELY FOR DISPOSITION OF THOSE FACILITIES.
3. UTILITIES MUST BE LOCATED TO MINIMIZE INTERFERENCE WITH ONE ANOTHER, TO PROVIDE REQUIRED HORIZONTAL AND VERTICAL SEPARATIONS, AND TO PROVIDE MAINTENANCE ACCESS WITHOUT VIOLATING EASEMENT BOUNDARIES. SEPARATION BETWEEN UTILITIES PER MAG STANDARD.
4. ALL WATER MAINS, APPURTENANCES, AND INSTALLATIONS SHALL CONFORM TO A.W.W.A. STANDARDS AND ARIZONA DEPARTMENT OF ENVIRONMENTAL QUALITY AND TOWN OF JEROME REQUIREMENTS. WATER SYSTEMS SHALL BE TESTED PER A.D.E.Q. BULLETIN NO. 10 TO THE APPROPRIATE A.W.W.A. STANDARDS.

CONSTRUCTION STAKING

1. THE ACCURACY OF ALL CONSTRUCTION WORK SHALL BE MAINTAINED AND VERIFIED BY THE OWNER'S SURVEYOR AT THE OWNER'S EXPENSE BY PROVIDING CONSTRUCTION STAKING SUITABLE TO THE TOWN ENGINEER. STAKES WILL BE SET ESTABLISHING LINES AND GRADES (FINISH OR FLOWLINE) FOR ALL CONSTRUCTION INCLUDING ROADS, CURB AND GUTTER, SIDEWALKS, UTILITIES, STRUCTURES, AND OTHER WORK AS CONSIDERED NECESSARY BY THE ENGINEER. ALL SURVEY CONTROL SHALL BE SET BY THE OWNER'S SURVEYOR FROM MONUMENTS ACCEPTABLE TO THE ENGINEER.

GRADING AND EARTHWORK

1. NO GRADING OR TRENCHING WORK SHALL BEGIN PRIOR TO SUPPORTING AND PROTECTING EXISTING ONSITE AND ADJACENT PROPERTY FROM SETTLING, CRACKING, OR OTHER DAMAGE WHICH MIGHT RESULT. CONTRACTOR SHALL VERIFY FROM SOILS REPORT RECOMMENDATIONS THE DEGREE OF DIFFICULTY REQUIRED FOR TRENCHING AND EXCAVATION WORK BASED ON DEPTH AND TYPE OF MATERIALS TO BE ENCOUNTERED.
2. CLEARING AND GRUBBING: EXAMINE SITE AND PROVIDE NECESSARY EQUIPMENT AND LABOR TO REMOVE FROM THE SITE AND DISPOSE OF STUMPS, ROOTS, ROCKS, LOOSE FILL, VEGETATION DEBRIS, AND ANY OTHER OBJECTIONABLE MATERIALS FROM THE BUILDING AND MATERIAL. CLEAN. UNCLASSIFIED ONSITE SOILS MAY BE USED IN GENERAL AS FILL MATERIAL. SEE MAG SPECIFICATIONS 201 AND 215.
3. SUBGRADE PREPARATION: IF THE NATURAL SUBGRADE IS LESS THAN THE REQUIRED DENSITY, IT SHALL BE SCARIFIED AND COMPACTED TO A MINIMUM DEPTH OF TWELVE INCHES OR AS NOTED IN THE SOILS REPORT IMMEDIATELY PRIOR TO PLACING SUBSEQUENT FILL MATERIAL THEREON. THE CONTRACTOR IS RESPONSIBLE FOR MAINTENANCE AND REPAIR OF DAMAGE TO PREPARED SUBGRADE CAUSED BY CONTRACTOR'S OPERATIONS OR PUBLIC TRAFFIC UNTIL ACCEPTANCE OF PROJECT. NO MATERIALS SHALL BE PLACED UPON THE PREPARED SUBGRADE UNTIL IT MEETS THE SPECIFIED REQUIREMENTS. ROADWAY SUBGRADE COMPACTION INCLUDES SUBGRADE UNDER ALL PAVEMENT, CURB, SIDEWALKS, SHOULDERS, AND FILL SLOPES. SUBGRADE TOLERANCES SHALL BE AS SPECIFIED IN MAG SECTION 301. OPEN LANDSCAPED AREAS SHALL BE GRADED TO ±0.2 FEET.
4. IT IS THE RESPONSIBILITY OF THE CONTRACTOR TO CONTACT THE TESTING COMPANY FOR SCHEDULING OF COMPACTION TESTING. THE FREQUENCY OF DENSITY AND MOISTURE TESTS REQUIRED FOR ADEQUATE CONTROL SHALL BE THE RESPONSIBILITY OF THE SOILS ENGINEER WHO SHALL CERTIFY TO THE ENGINEER AND CONTRACTOR AT PROJECT END THAT THE ROADBED FILL IS COMPACTED AS OUTLINED HEREIN. COMPACTION SHALL BE ACHIEVED BY MECHANICAL MEANS. IN NO CASE SHALL STRUCTURE BACKFILLING BE FLOOD WATER SETTLED.
5. ALL SLOPE CONSTRUCTION AND ROADWAY EXCAVATION SHALL CONFORM TO THE REQUIREMENTS OF MAG SPECIFICATIONS SECTIONS 20, 205, 211, 301, AND UBC SECTIONS 7009 AND 8010. CUT AND FILL SLOPES SHALL BE AS INDICATED ON THE DETAILS AND PLANS. CUT AND FILL SLOPE GRADIENTS SHALL NOT EXCEED 2:1 IN STEEPNESS WITHOUT WRITTEN AUTHORIZATION FROM THE SOILS ENGINEER AND EXAMINATION BY THE DESIGN ENGINEER. ALL SLOPE CONDITIONS SHALL BE PROVIDED WITH THE APPROPRIATE BENCHES AS SPECIFIED IN THE REFERENCE DOCUMENTS AND INDICATED ON THE PLANS. IF SOILS CONDITIONS ARE ENCOUNTERED WHICH DO NOT ALLOW THE ESTABLISHMENT OF THE INDICATED CUT OR FILL SLOPES, THE DESIGN ENGINEER AND SOILS ENGINEER SHALL BE CONTACTED IMMEDIATELY TO DETERMINE AN ADJUSTMENT TO THE SLOPE GRADIENT OR TO ESTABLISH A METHOD OF STABILIZATION. ALL FILL SLOPES SHALL BE COMPACTED AS EACH LIFT OF FILL MATERIAL IS PLACED. ALL CUT AND FILL SLOPES SHALL BE UNIFORMLY GRADED TO LINES AND GRADES INDICATED. TOPS OF ALL CUT SLOPES SHALL BE ROUNDED AND ALL UNSTABLE AND LOOSE MATERIAL AT TOP OF SLOPE SHALL BE REMOVED. TOP OF CUT SLOPES OVER 10' HIGH SHALL BE PROVIDED WITH BRO DITCHES FOR DRAINAGE. ALL CUT AND FILL SLOPES SHALL BE REVEGETATED WITH A MIXTURE OF NATIVE GRASSES AND WILD FLOWER SEED OR AS SPECIFIED WITHIN THE LANDSCAPE PLANS. COMPACT ALL SHOULDERS AND BACKFILLS BEHIND ALL STRUCTURES AND WALLS.
6. COMPACT TO THE FOLLOWING SPECIFIED PERCENT OF MAXIMUM DENSITY AS DETERMINED IN ACCORDANCE WITH ASTM D698 AND MAG SECTION 211 OR AS DIRECTED IN THE SOILS REPORT.

MINIMUM PERCENT COMPACTION

SUBGRADE SOIL:

ROADWAY AND STRUCTURE AREAS - - - - - - - - - - - - - -95
PAVED AREAS (PAVEMENTS, SIDEWALKS, & PADS) - - 95

EARTH FILL:

ROADWAY AND STRUCTURE AREAS - - - - - - - - - - - - - -95
PAVED ARES (PAVEMENTS, SIDEWALKS, & PADS) - - - 95
GRASSED AND PLANTING AREAS - - - - - - - - - - - - - - - - 85
AGGREGATE BASE COURSE - - - - - - - - - - - - - - - - - - - 100
BACKFILL AROUND STRUCTURES - - - - - - - - - - - - - - - -95

BACKFILL FOR UTILITY TRENCHES (PER MAG SECTION 601). PROVIDE TYPE 1 BACKFILL OR AS DIRECTED BY APPROPRIATE UTILITY REQUIREMENTS. BACKFILL FOR TRENCHES WITHIN 10' OF STRUCTURES AND WALLS SHALL BE COMPACTED TO 95% UNLESS DIRECTED OTHERWISE BY ENGINEER.

100% ISSUED FOR BID

NO	BY	DATE	REVISIONS	DATE	APP.

Registered Professional Engineer (Civil) CERTIFICATE NO. 70097 TAYLOR B. PIERCE Date Signed 10/31/25 ARIZONA, U.S.A. Expires 12/31/28

PREPARED BY: PACE
DESIGNED BY: NE
DRAWN BY: DS, WW
CHECKED BY: TP SCALE: AS NOTED
DATE NOV 2025
JOB NO. B614

TITLE
GENERAL NOTES AND ABBREVIATIONS

JOB
TOWN OF JEROME
WASTEWATER TREATMENT PLANT
YAVAPAI CO. AZ

PREPARED BY:
PACE
Advanced Water Engineering
8723 E. VIA de COMMERCIO, SUITE A-204 | SCOTTSDALE, CA 85258
P: (408) 991-3595 | www.pacewater.com

TAYLOR B. PIERCE R.C.E 70097 DATE

SHEET
G2.0
3 OF 99 SHEETS
JOB NO. B614

THESE DRAWINGS ARE THE PROPERTY OF P.A.C.E. AND SHALL NOT BE REPRODUCED IN ANY MANNER NOR BE USED FOR CONSTRUCTION UNLESS STAMPED "ISSUED FOR CONSTRUCTION".

W:\B614\Engineering\B614-30\sheets\B614 - G2.0 GENERAL NOTES.dwg - Tab: G2.0 - by neddington on 11/18/25 at 3:11:17 PM

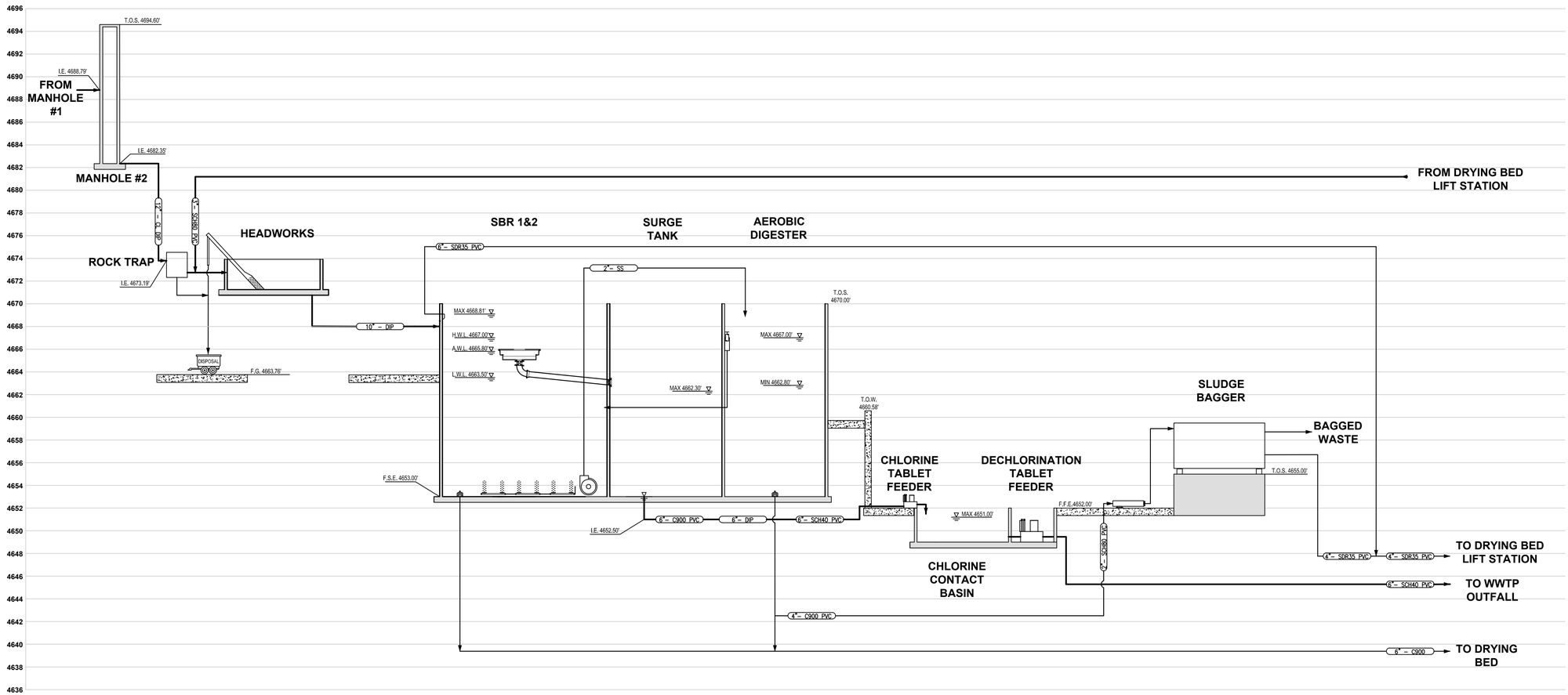

LEGEND

- PUMP
- ROTARY LOBE PUMP
- SLIDE/WEIR GATE
- TELESCOPING VALVE
- MUD VALVE
- PRIMARY FLOW
- SECONDARY FLOW

NO	BY	DATE	REVISIONS	DATE	APP.

Registered Professional Engineer (Civil) CERTIFICATE NO. 70097 TAYLOR B. PIERCE Signed ARIZONA, U.S.A. Expires 12/31/28

PREPARED BY: PACE
DESIGNED BY: NE
DRAWN BY: DS, WW
CHECKED BY: TP
SCALE: AS NOTED
DATE: NOV 2025
JOB NO.: B614

THESE DRAWINGS ARE THE PROPERTY OF P.A.C.E. AND SHALL NOT BE REPRODUCED IN ANY MANNER NOR BE USED FOR CONSTRUCTION UNLESS STAMPED 'ISSUED FOR CONSTRUCTION'.

TITLE: HYDRAULIC PROFILE

JOB: TOWN OF JEROME
WASTEWATER
TREATMENT PLANT
YAVAPAI CO. AZ

100% ISSUED FOR BID

PREPARED BY: TAYLOR B. PIERCE R.C.E 70097 DATE
PACE Advanced Water Engineering
8723 E. Via de Commercio, Suite 210, Scottsdale, CA 85258
P. (408) 991-3595 | www.pacewater.com

SHEET
G3.0
4 OF 99 SHEETS

JOB NO. B614

W:\B614\Engineering\B614-30\sheets\B614-G3.0 HYDRAULIC PROFILE.dwg - Tab: G3.0 - by reddington on 03/02/26 at 9:52:17 AM

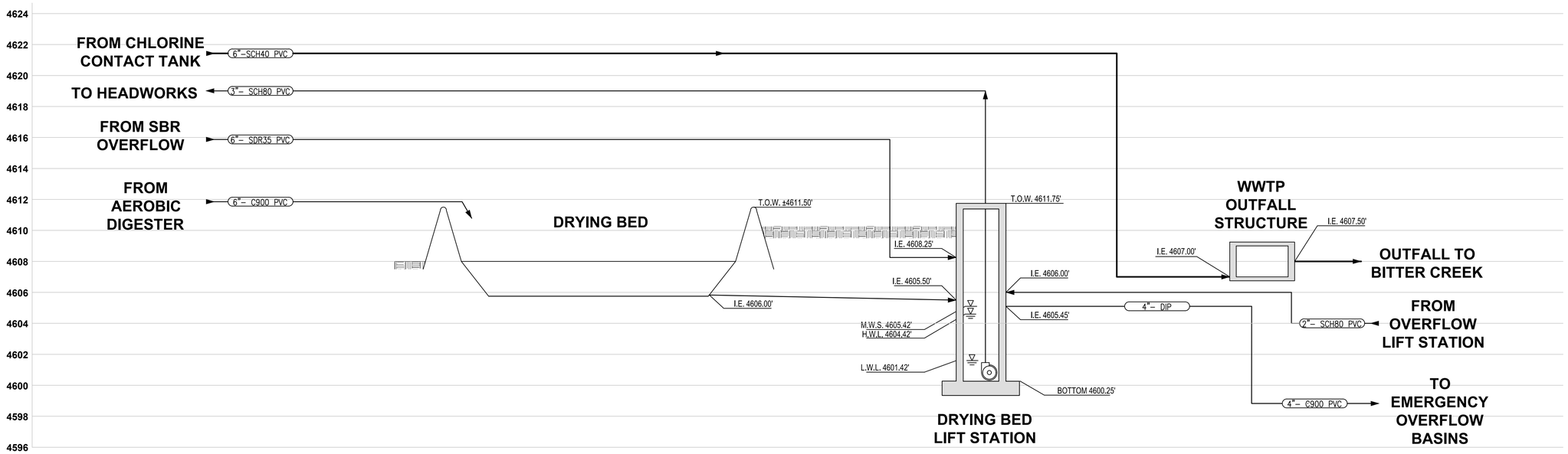

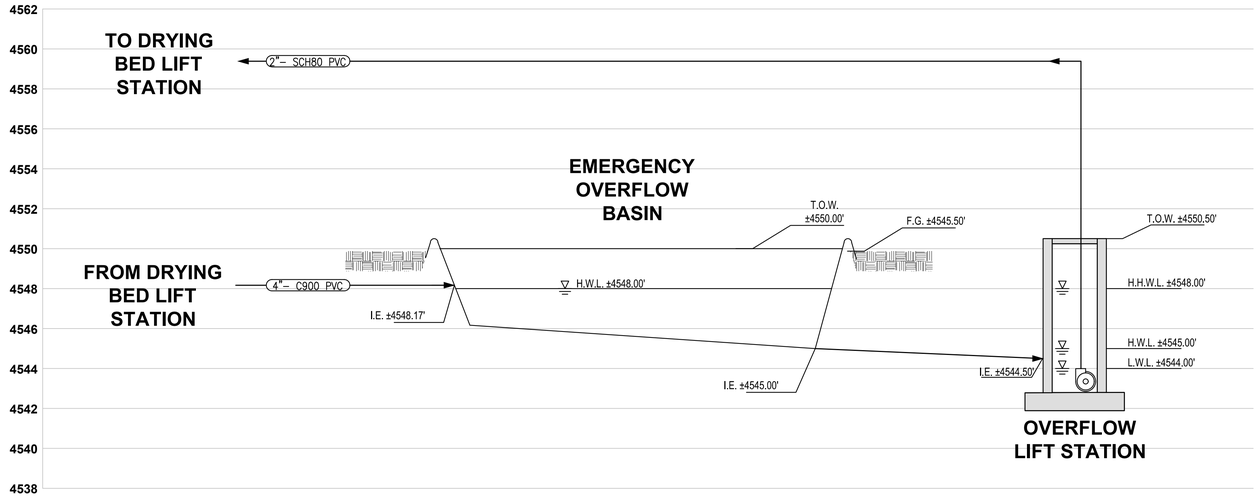

LEGEND

- PUMP
- ROTARY LOBE PUMP
- SLIDE/WEIR GATE
- TELESCOPING VALVE
- MUD VALVE
- PRIMARY FLOW
- SECONDARY FLOW

100% ISSUED FOR BID

NO	BY	DATE	REVISIONS	DATE	APP.

Registered Professional Engineer (Civil) CERTIFICATE NO. 70097 Timothy B. Pierce Signed on ARIZONA, U.S.A. Expires 12/31/28

THESE DRAWINGS ARE THE PROPERTY OF P.A.C.E. AND SHALL NOT BE REPRODUCED IN ANY MANNER NOR BE USED FOR CONSTRUCTION UNLESS STAMPED 'ISSUED FOR CONSTRUCTION'.

PREPARED BY: PACE
DESIGNED BY: NE
DRAWN BY: DS, WW
CHECKED BY: TP
SCALE: AS NOTED
DATE: NOV 2025
JOB NO.: B614

TITLE: HYDRAULIC PROFILE

JOB: TOWN OF JEROME WASTEWATER TREATMENT PLANT — YAVAPAI CO. AZ

PREPARED BY: TAYLOR B. PIERCE — R.C.E. 70097 — DATE

Advanced Water Engineering
8723 E. VIA de COMMERCIO, BLDG. A, SCOTTSDALE, CA 85258
P: (480) 991-3595 | www.pacewater.com

SHEET G3.1
5 OF 99 SHEETS

JOB NO. B614

W:\B614\Engineering\B614-3\Sheets\B614-G3.0-HYDRAULIC PROFILE.dwg - Tab: G3.1 - by noddington on 03/02/26 at 9:52:17 AM

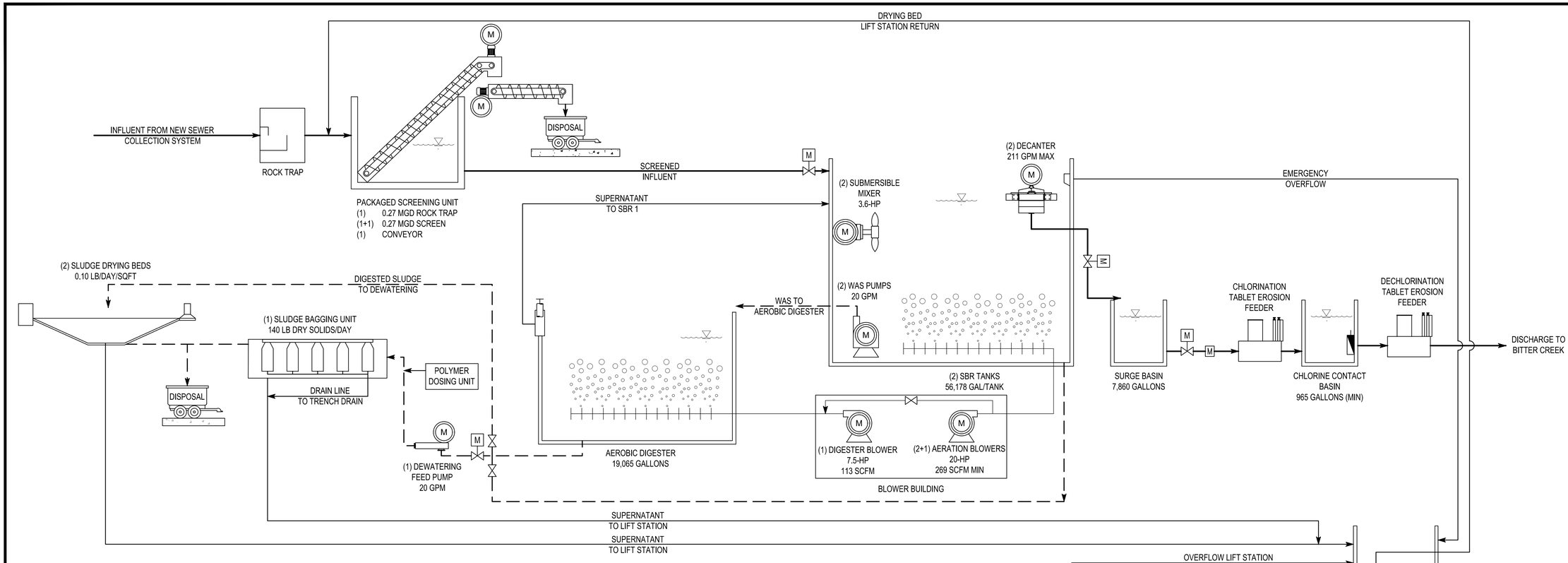

EQUIPMENT LIST

ITEM	ID #	DESCRIPTION	MANUFACTURER	MODEL #	HP	SPECIFICATIONS / DESCRIPTION	QTY
1	03010A 03010B	INFLUENT COARSE SCREEN	OR-TEC OR EQUAL	MB480T2 W/ RT	0.16	TANK MOUNTED MECHANICALLY CLEANED BAR SCREEN WITH TWO INDEPENDENT 6MM SCREENING CHANNELS W/ ISOLATING SLIDE GATE & SST ENCLOSURE, PROVIDED WITH SEPERATE ROCK TRAP W/ BAFFLE AND OUTLET WEIR. 480V, 3 PHASE, 60HZ. 0.27 MGD PEAK FLOW	1
2	05120 05121	SBR INFLUENT PLUG VALVES	BY SBR VENDOR		0.5	ELECTRICALLY ACTUATED 10" PLUG VALVE W/ OPEN/CLOSE SERVICE. 120V, 1 PHASE, 60 HZ	2
3	05110 05112	SBR SUBMERSIBLE MIXERS	BY SBR VENDOR		3.6	PREMIUM EFFICIENCY CONSTANT SPEED DIRECT DRIVE MOTOR MIXER W/ MAST MOUNT AND MOORING, 480V, 3 PHASE, 60HZ.	2
4	04310 04311 04312	SBR AERATION BLOWERS	BY SBR VENDOR		20	VFD CONTROLLED PD BLOWER UNIT W/ SOUND ATTENUATED ENCLOSURE, 361 SCFM @ 6.63 PSI, 480V, 3 PHASE, 60HZ.	3
5	04313	DIGESTER AERATION BLOWER	BY SBR VENDOR		7.5	VFD CONTROLLED PD BLOWER UNIT W/ SOUND ATTENUATED ENCLOSURE, 110 SCFM @ 6.63 PSI, 480V, 3 PHASE, 60HZ. CONTROLLED	1
6	04180 04181	RETREIVABLE FINE BUBBLE DIFFUSER SYSTEM	BY SBR VENDOR		N/A	RETRIEVABLE DIFFUSER RACK ASSEMBLY WITH MIN 30" EPDM TUBE DIFFUSERS, RANGE 1.0 CFM - 10.0 CFM (1 - 5 SCFM DESIGN) 2/ W EPDM FLEXIBLE DROP LINE AND QUICK DISCONNECT FITTINGS	60
7	04280	COARSE BUBBLE DIFFUSER SYSTEM	BY SBR VENDOR		N/A	3" EPDM DISK COARSE BUBBLE DIFFUSERS, RANGE 0.5 CFM - 5.0 CFM (0.5 - 2 SCFM DESIGN) 3/8" CXN	12
8	05100 05101	WAS TRANSFER PUMPS	BY SBR VENDOR		1.8	20 GPM @ 15' TDH SUBMERSIBLE NON-CLOG SLUDGE PUMP, 1.8 HP 480V, 3 PHASE, 60HZ W/ BASE AND SS GUIDE RAIL	2
9	05111 05113	SOLIDS EXCLUDING FLOATING DECANTER	BY SBR VENDOR		0.5	211 GPM FLOATING DECANTER W/ 120V, 1 PHASE, 60 HZ ACTUATED SUBMERGED WEIR, MOORING AND 6" DISCHARGE HOSE ASSEMBLY	2
10	05121 05123	SBR DECANT VALVE	BY SBR VENDOR		0.33	ELECTRICALLY ACTUATED 6" BUTTERFLY VALVE W/ MODULATING SERVICE, 480V, 3 PHASE, 60HZ	2
11	06221	TRANSFER/EFFLUENT VALVE	BY SBR VENDOR		0.33	ELECTRICALLY ACTUATED 6" BUTTERFLY VALVE W/ MODULATING SERVICE, 480V, 3 PHASE, 60HZ	1
12	06290	CHLORINATION EROSION TABLET FEEDER	NORWECO OR EQUAL	SERIES 4000	N/A	6" SCH 80 PVC HUB TABLET FEEDER W/ ADJUSTABLE INLET BAFFLE AND OUTLET WEIR AND 24" RISER ASSEMBLIES	1
13	05291	DECHLORINATION EROSION TABLET FEEDER	NORWECO OR EQUAL	SERIES 4000	N/A	6" SCH 80 PVC HUB TABLET FEEDER W/ ADJUSTABLE INLET BAFFLE AND OUTLET WEIR AND 24" RISER ASSEMBLIES	1
14	08400	DEWATERING FEED PUMP	BOERGER OR EQUAL	AN 40	3.0	20 GPM ROTARY LOBE SLUDGE PUMP, 3 HP 480V, 3 PHASE, 60HZ	1
15	08410	DRY POLYMER MAKE-DOWN AND FEED UNIT	PROMINENT OR EQUAL	ULTROMAT MT 140	0.25	POLYPROPOLENE PREP TANK W/ ELECTRIC STIRRER, WETTING CONE AND INJECTOR 480V, 3 PHASE, 60 HZ	1
16	08401	POLYMER METERING PUMP	PROMINENT OR EQUAL	DULCOFLEX - DFXa 0530	0.16	0.08 - 7.93 GPH SHELF-MOUNTED PERISTALTIC METERING PUMP, 73 PSI MAX BACK PRESSURE, 1/2" x 3/8" POLYURETHANE CONNECTOR TUBING, 115V, 1-PH SERVICE	1
17	08490	SLUDGE BAGGER SYSTEM	ENVIRODYNE, OR EQUAL	585-8i	N/A	20 GPM 8-BAG SLUDGE DEWATERING SYSTEM MAX LOADING RATE OF 20 GPM OR 100 #/HR - 25# ACTIVE POLYMER / TON DS	1
18	07400	DRYING BED DRAIN RETURN PUMPS	GRUNDFOS OR EQUAL	SEG.A15.40.EX.2.60H	4.16	70 GPM @ 90' TDH SUBMERSIBLE GRINDER PUMP, 5 HP 480V, 3 PHASE, 60HZ W/ BASE AND SS GUIDE RAIL	2
19	07401	PACKAGED OVERFLOW LIFT STATION	E ONE OR EQUAL	SP84S	2	31 GPM @ 82' TDH SDUPLEX GRINDER PRE-PACKAGED PUMP STATION, 2 HP 240V, 1 PHASE, 60 HZ W/ INTEGRAL FLOAT CONTROLS, PANEL AND SINGLE WARNING BEACON	1
20	SEE PID	PRESSURE TRANSDUCER	BY SBR VENDOR		N/A	304 SS SUBMERSIBLE PRESSURE TRANSDUCER WITH 4-20 mA SIGNAL OUTPUT	4
21	SEE PID	LEVEL SENSOR	BY SBR VENDOR		N/A	316 SS FLOAT SWITCH WITH THREE-CONDUCTOR ELECTRICAL CABLE	4
22	05160A 05161A	DISSOLVED OXYGEN CONTROLLER	BY SBR VENDOR		N/A	NEMA 4X ENCLOSURE WITH AC 100-230 VAC POWER SUPPLY, 4-20 mA SIGNAL OUTPUT	2
23	05160B 05161B	DISSOLVED OXYGEN PROBE	BY SBR VENDOR		N/A	304 SS PROBE	2
24	06240	EFFLUENT FLOW METER	BY SBR VENDOR		N/A	6" ELECTROMAGNETIC FLOW METER W/ TRAMSMITTER, ±1%ACCURACY 5D/3D, WITH 4-20 mA SIGNAL OUTPUT	1
25	01003	STANDBY GENERATOR			N/A	600 KW STANDBY GENERATOR W/ SOUND ATTENUATED OUTDOOR ENCLOSURE AND SUB BASE FUEL TANK	1

DESIGN FLOWS:

MAX MONTH AVE DAY FLOW:	90,000 GPD
MAX PEAK DAY FLOW:	135,000 GPD
PEAK HOUR FLOW:	270,000 GPD

INFLUENT PARAMETERS:

BOD:	360 MG/L
TSS:	250 MG/L
TKN:	40 MG/L

EFFLUENT PARAMETERS:

BOD:	<30 MG/L
TSS:	<30 MG/L
TN:	<10 MG/L
FECAL COLIFORM:	200 CFU/100 ML (4/7 SAMPLES); 800 CFU/100 ML (SINGLE SAMPLE MAX)

LEGEND

- FLOW METER
- PUMP
- BLOWER
- ROTARY LOBE PUMP
- ISOLATION VALVE/GATE
- MOTORIZED VALVE
- SLIDE/WEIR GATE
- TELESCOPING VALVE
- MIXER
- PRIMARY FLOW
- SECONDARY FLOW
- SLUDGE FLOW

100% ISSUED FOR BID

NO	BY	DATE	REVISIONS	DATE	APP.

Registered Professional Engineer (Civil) CERTIFICATE NO. 70097 Timothy R. Pierce Signed 12/31/25 ARIZONA, U.S.A. Expires 12/31/26

THESE DRAWINGS ARE THE PROPERTY OF P.A.C.E. AND SHALL NOT BE REPRODUCED IN ANY MANNER NOR BE USED FOR CONSTRUCTION UNLESS STAMPED "ISSUED FOR CONSTRUCTION".

PREPARED BY: PACE
DESIGNED BY: NE
DRAWN BY: DS, WW
CHECKED BY: TP
SCALE: AS NOTED
DATE: NOV 2025
JOB NO.: B614

TITLE: PROCESS FLOW DIAGRAM

JOB: TOWN OF JEROME WASTEWATER TREATMENT PLANT — YAVAPAI CO. AZ

PREPARED BY: TAYLOR B. PIERCE — R.C.E 70097 — DATE

PACE
Advanced Water Engineering
8733 E. Via de Ventura, Suite 2, Scottsdale, AZ 85258
P: (480) 991-3995 | www.paceadvisor.com

SHEET G3.2
6 OF 99 SHEETS

JOB NO. B614

W:\B614\Engineering\B614-30\sheets\B614-G3.0 HYDRAULIC PROFILE.dwg - Tab: G3.2 - by reddington on 03/02/26 at 9:32:17 AM

1682

1 GENERAL

1.1 ALL PAVING, GRADING PIPING AND UTILITY LINE CONSTRUCTION WORK WITHIN THE PUBLIC RIGHT-OF-WAY, ON PRIVATE STREETS, ACCESS WAYS, LOT GRADING, MATERIALS, AND WORKMANSHIP SHALL COMPLY WITH TOWN OF JEROME ENGINEERING STANDARDS AND SPECIFICATIONS, AND SHALL CONFORM TO THE LATEST MARICOPA ASSOCIATION OF GOVERNMENTS (MAG) AND A.D.O.T. STANDARD DETAILS AND SPECIFICATIONS. GRADING WORK SHALL CONFORM TO MAG SPECS, THE SOILS REPORT* AND CHAPTER 70 ENTITLED "EXCAVATION AND GRADING" OF THE UNIFORM BUILDING CODE (UBC) LATEST EDITION, SUBSECTIONS 7001 TO 7005, 7009 TO 7013, FIGURES 70-1 AND 70-2 AND AS STATED THEREIN. LOCAL MUNICIPAL STANDARD DETAILS WILL CONTINUE TO APPLY WHERE NOT ADOPTED OR INCLUDED BY MAG. THE FOLLOWING NOTES AND SPECIFICATIONS ARE HEREBY MADE A PART OF THE CONTRACT DOCUMENTS AND PROJECT SPECIFICATIONS. WHERE THERE EXISTS A CONFLICT BETWEEN THESE NOTES, MAG SPECS, UBC, THE SOILS REPORT* OR THE PROJECT SPECIFICATIONS, THE MORE STRINGENT OF THE REQUIREMENTS SHALL GOVERN UNLESS PRIOR CLARIFICATION FROM THE ENGINEER HAS BEEN GIVEN IN WRITING TO THE CONTRACTOR. THE CONTRACTOR AS STATED HEREIN SHALL MEAN THE GENERAL CONTRACTOR AND HIS ASSOCIATED SUBCONTRACTORS. THE GENERAL CONTRACTOR IS RESPONSIBLE FOR THE COORDINATION AND PERFORMANCE OF THE WORK OF ALL OF HIS SUBCONTRACTORS AND SUPPLIERS.

1.2 ALL WORK SHALL BE BID AND INSTALLED BY THE CONTRACTOR COMPLETE AND OPERATIONAL TO LINES, GRADES AND FUNCTIONS INDICATED ON ALL PLANS AND SPECIFICATIONS. PROVIDE ALL LABOR, MATERIALS, EQUIPMENT AND SERVICES NECESSARY TO COMPLETE ALL PROJECT EARTHWORK AND SITE WORK INCLUDING BUT NOT LIMITED TO: SITE CLEARING, GRUBBING, DEMOLITION'S, DEBRIS REMOVALS FROM THE SITE, IMPORT AND/OR EXPORT OF SOILS AND OTHER MATERIALS TO AND FROM THE SITE, BORROW MATERIALS, TEMPORARY SOILS MATERIAL STOCKPILING, BACKFILL OF ONSITE BORROW PITS, MOVING OF MATERIALS, CUT AND FILL, SLOPES, SOILS AND BANK STABILIZATION AND PROTECTION, BERMING, ROADWAY EXCAVATIONS, RELOCATION'S, STRUCTURE EXCAVATIONS, TRENCHING, ALL BACKFILLING, SITE GRADING, PAVING, PIPING, UTILITY LINE AND STORM DRAINAGE CONSTRUCTION, CURBS, SITE CONCRETE WORK AND OTHER MISCELLANEOUS SITE WORK STRUCTURES AND ITEMS INDICATED ON THE PLANS AND IN THE CONTRACT DOCUMENTS.

1.4 ANY QUANTITIES SHOWN ON PLANS ARE NOT VERIFIED BY THE ENGINEER. QUANTITIES ARE APPROXIMATE ONLY AND INTENDED AS A GUIDE FOR ESTIMATING PURPOSES. THE CONTRACTOR IS RESPONSIBLE FOR PROVIDING HIS OWN QUANTITY TAKE OFFS. THE CONTRACTOR SHALL VISIT THE SITE AND REVIEW THE SOILS CONDITIONS AND THE SOILS REPORT* WITH THE PROJECT SOILS ENGINEER PRIOR TO BIDDING THIS PROJECT. ANY DISCREPANCIES IN SITE MATERIALS SHALL BE BROUGHT TO THE ATTENTION OF THE DESIGN ENGINEER 7 DAYS MINIMUM PRIOR TO BIDDING FOR REVIEW. ALL SHRINK OF EARTH MATERIAL OR EXCESS MATERIAL FROM UTILITY TRENCHES AND FOUNDATIONS SHALL BE INCLUDED IN THE CONTRACTOR'S BID.

1.5 THE ENGINEER MAY REQUIRE THE SUBMITTAL OF A "CERTIFICATE OF COMPLIANCE" AND/OR "MANUFACTURER'S GUIDELINES" FOR ANY MATERIALS USED IN THE WORK. MANUFACTURER'S GUIDELINES SHALL CONSISTS OF WRITTEN INSTRUCTIONS FOR SHIPPING, HANDLING, UNLOADING, CUTTING, JOINING, INSTALLATION, STORAGE, AND/OR ANY OTHER FACETS OF CONSTRUCTION

1.6 THE ENGINEER MAY REQUIRE ANY MATERIALS USED IN THE WORK TO BE TESTED ACCORDING TO AASHTO AND ASTM STANDARDS. THE CONTRACTOR SHALL, AT HIS EXPENSE, SUPPLY CERTIFICATES OR RESULTS OF TESTING.

1.7 ALL WORK AND MATERIALS NOT CONFORMING TO SPECIFICATIONS OR PERFORMED WITHOUT THE CONSENT OF THE OWNER OR HIS REPRESENTATIVE WILL BE SUBJECT TO REJECTION BY THE OWNER AND/OR ENGINEER AND REPLACED AT THE CONTRACTOR'S EXPENSE.

1.8 THE CONTRACTOR SHALL GUARD AGAINST DAMAGE DURING CONSTRUCTION TO ADJACENT PROPERTIES, FENCES, WALLS AND UTILITY EQUIPMENT. ANY ITEMS DAMAGED BY CONSTRUCTION SHALL BE REPLACED WITH SAME KIND OR BETTER AT CONTRACTOR'S EXPENSE.

1.9 NO CONSTRUCTION SHALL BEGIN UNTIL CONFLICTING UNDERGROUND UTILITY MITIGATING CONSTRUCTION IS COMPLETED, IF ANY, AND UNTIL PIPE SLEEVES AND SERVICE STUBS TO ALL BUILDINGS OR LOTS HAVE BEEN EXTENDED.

1.10 NO EXISTING SURVEY MONUMENTATION SHALL BE REMOVED OR DISTURBED BY THE CONTRACTOR WITHOUT NOTIFICATION AND APPROVAL OF THE PROJECT SURVEYOR. THE CONTRACTOR SHALL CONTACT THE PROJECT SURVEYOR FOR THE SETTING OF REFERENCE POINTS 48 HOURS PRIOR TO DISTURBING OR REMOVING ANY MONUMENTS. THE CONTRACTOR SHALL BE FINANCIALLY RESPONSIBLE FOR COSTS TO REESTABLISH MONUMENTATION OR CONTROLS REMOVED WITHOUT PRIOR NOTICE AND APPROVAL.

1.11 TRAFFIC CONTROL SHALL CONFORM TO THE LOCAL MUNICIPAL ADOPTED STANDARDS.

1.12 THESE PLANS ARE SUBJECT TO THE INTERPRETATION OF THE INTENT BY THE ENGINEER. ANY QUESTIONS REGARDING THESE PLANS MUST BE GIVEN TO THE ENGINEER AND YOU MUST HAVE RECEIVED A RESPONSE TO THE QUESTION. ANYONE WHO TAKES IT UPON THEMSELVES TO MAKE AN INTERPRETATION OF THE DRAWINGS OR MAKES REVISIONS TO THE SAME WITHOUT CONFERRING WITH THE DESIGN ENGINEER SHALL BE RESPONSIBLE FOR THE CONSEQUENCES THEREOF.

1.13 CONTRACTOR SHALL COORDINATE HIS WORK WITH THE DESIGN ENGINEER, OWNER, PUBLIC UTILITY COMPANIES AND OTHER ASSOCIATED TRADES ON AND ADJACENT TO THE PROJECT SITE. COORDINATE INSTALLATION OF ALL PUBLIC AND PRIVATE UNDERGROUND UTILITIES, PIPES, CONDUITS AND PIPE SLEEVE SIZES AND LOCATIONS PRIOR TO THEIR PLACEMENT. INSTALLATION: THE CONTRACTOR IS RESPONSIBLE FOR SETTING CAPPED SLEEVES AND PROVIDING TYPE 1 COMPACTION IN ALL BACKFILLED TRENCHES IN PAVED AREAS AND EASEMENTS. PROVIDE TRACER WIRE AND MARKER AT GRADE LEVEL FOR FUTURE LOCATING.

1.14 CONTRACTOR SHALL BE RESPONSIBLE FOR FINANCIAL REIMBURSEMENT TO THE OWNER AND ENGINEER FOR THE FOLLOWING ADDITIONAL ENGINEERING SERVICES SHOULD THEY OCCUR, AND SUCH A/E DESIGN SERVICES WILL BE DEDUCTED FROM CONTRACTOR'S FINAL PAYMENTS BY THE OWNER.

A. REINSPECTION, COORDINATION AND EXTRA TESTING OR RETESTING COSTS INCURRED BECAUSE OF IMPROPER OR FAULTY CONSTRUCTION. ONE TIME TESTING AND INSPECTION IS PROVIDED FOR BY THE OWNER. ALL OTHER TESTING IS THE CONTRACTOR'S RESPONSIBILITY.

B. ADDITIONAL STAKING NOT INCLUDED IN CONTRACT OR RESTAKING AS REQUESTED BY CONTRACTOR.

C. CHANGES AND SUBSTITUTIONS IN MATERIALS CONSTRUCTION METHODS, REQUESTED BY THE CONTRACTOR, THAT MUST BE REVIEWED, RECALCULATED OR APPROVED BY ENGINEER.

D. ENGINEERING DESIGN SERVICES REQUESTED BY THE CONTRACTOR OR CAUSED BY ERRORS OR OMISSIONS BY THE CONTRACTOR.

E. ANY ENGINEERING DESIGN APPROVED BY OTHERS AND SUBMITTED FOR REVIEW. THESE SHALL BEAR THE SEAL OF AN ENGINEER REGISTERED IN ARIZONA.

ANY DIFFERENCE BETWEEN PLANS AND SPECIFICATIONS AND QUESTIONS AS TO THEIR MEANING SHALL BE DETERMINED PRIOR TO AWARD OF THE CONTRACT AND SHALL BE INTERPRETED BY THE ENGINEER. THE GENERAL INTENT AND MEANING OF THE PLANS AND SPECIFICATIONS WILL GOVERN AND SHALL NOT WARRANT ANY ADDITIONAL COMPENSATION TO THE CONTRACTOR. THE ENGINEER WILL PROVIDE FULL INSTRUCTIONS WHEN DISCREPANCIES ARE DISCOVERED IN THE DOCUMENTS.

1.16 THE CONTRACTOR SHALL BE RESPONSIBLE FOR VERIFYING THE LIMITS OF THE WORK AREA FOR ALL PHASES OF THE WORK PRIOR TO BEGINNING CONSTRUCTION OF THOSE PHASES. ALL CONSTRUCTION LIMITS, AREAS OF WORK, SETBACKS, PERIMETERS, ADJACENT PROPERTY LINES, BOUNDARIES, AND OTHER CRITERIA DEFINING THE LIMITS OF THE CONTRACTOR'S WORK AREA AND LIMITS, SHALL BE STAKED BY THE CONTRACTOR'S SURVEYOR PRIOR TO CONSTRUCTION OR CLEARING OF THE SITE. THE CONTRACTOR SHALL BE RESPONSIBLE FOR FAMILIARIZING HIMSELF WITH THE EXTENT OF WORK TO BE DONE IN EACH SEPARATE PHASE OF THE PROJECT, AND ANY WORK NECESSARY IN INACTIVE PHASES REQUIRED TO DEEM THE ACTIVE PHASES FINISHED, SAFE, AND SERVICEABLE.

1.17 THE CONTRACTOR OR SUBCONTRACTORS SHALL NOT DEVIATE FROM THESE PLANS OR MAKE FIELD CHANGES WITHOUT REQUESTING THE ENGINEER TO PROVIDE, IN WRITING, THE APPROVAL OF THESE MODIFICATIONS. ANY CHANGES MADE WITHOUT APPROVAL OF THE DESIGN ENGINEER ARE SUBJECT TO REMOVAL AT THE EXPENSE OF THE CONTRACTOR.

1.18 THE DESIGN ENGINEER RESERVES THE RIGHT TO MAKE MINOR FIELD MODIFICATIONS TO GRADES AND STRUCTURE DESIGNS TO ACCOMMODATE FIELD CONDITIONS FOUND ON SITE. THIS INCLUDES BUT IS NOT LIMITED TO MINOR MODIFICATIONS TO GRADE, ALIGNMENT, SLOPE OR STRUCTURE LOCATIONS. THE ENGINEER SHALL HAVE THE RIGHT TO MAKE SUCH CHANGES IN WRITING IN THE LOCATION AND QUANTITIES OF WORK AS MAY BE DEEMED ADVISABLE.

1.19 NO JOB WILL BE CONSIDERED COMPLETE UNTIL FINE GRADING IS COMPLETE AND ALL CURBS, PAVEMENT AND SIDEWALKS HAVE BEEN SWEPT CLEAN OF ALL DIRT AND DEBRIS, ALL SURVEY MONUMENTS ARE INSTALLED AND ALL VALVES, MANHOLES AND BOXES HAVE BEEN ADJUSTED ACCORDING TO THE PLANS AND STANDARD DETAILS.

1.20 EXISTING GRADES INDICATED ON PLANS ARE BASED ON PREGRADING CONDITIONS. LOSSES IN MATERIAL DUE TO SHRINKAGE OF MATERIAL, DEMOLITION OF EXISTING SITE FEATURES, CLEARING AND GRUBBING OF THE SITE SHALL BE INCLUDED IN CONTRACTOR'S BID.

1.21 SHOP DRAWINGS SHALL BE PROVIDED BY THE CONTRACTOR PER MAG SECTION 105.2.

2 PERMITS

2.1 CONTRACTOR SHALL OBTAIN ALL PERMITS AT HIS OWN EXPENSE FROM LOCAL MUNICIPAL AND AIR POLLUTION CONTROL AUTHORITIES PRIOR TO BEGINNING CONSTRUCTION.

2.2 REQUIRED PERMITS SHALL BE SECURED BY THE CONTRACTOR FROM THE APPROPRIATE AGENCIES. A.D.O.T. REQUIRES THAT A PERMIT BE ISSUED FROM THEIR OFFICE FOR ANY WORK WITHIN STATE RIGHT-OF-WAY. FEDERAL PERMITS, UTILITY CO. AND OTHER PERMITS MAY BE REQUIRED. A.D.E.Q. REQUIRES PERMITS BE ISSUED PRIOR TO NEW CONSTRUCTION, EXTENSION TO, OR MODIFICATION OF WATER DISTRIBUTION SYSTEM, SEWAGE COLLECTION OR INDIVIDUAL SEWAGE TREATMENT SYSTEM. A RIGHT-OF-WAY PERMIT, ISSUED BY THE TOWN, IS REQUIRED FOR ANY EXCAVATION OR GRADING (INCLUDING PLACEMENT OF FILL). PRIOR TO CONSTRUCTION THE APPROPRIATE AGENCIES SHALL BE NOTIFIED BY THE CONTRACTOR AS REQUIRED BY THE PERMITS.

2.3 THE CONTRACTOR SHALL BE RESPONSIBLE FOR OBTAINING AT HIS OWN EXPENSE ALL APPROPRIATE INSURANCE FORMS FOR PERMIT REQUIREMENTS.

2.4 IT SHALL BE THE RESPONSIBILITY OF THE CONTRACTOR TO ARRANGE FOR THE RELOCATION AND RELOCATION COSTS, IF ANY, OF ALL UTILITIES, AND SUBMIT A UTILITY RELOCATION SCHEDULE TO THE MUNICIPALITY AND DESIGN ENGINEER PRIOR TO CONSTRUCTION. ALL PUBLIC UTILITY EQUIPMENT POLES, BOXES, STRUCTURES AND MUNICIPAL UTILITY COMPANY EQUIPMENT SHALL BE RELOCATED BY THE APPROPRIATE UTILITY COMPANY OR MUNICIPALITY BEFORE ANY WORK IS STARTED.

3 APPROVALS

3.1 THE CONTRACTOR IS TO USE ONLY THAT OFFICIAL CONSTRUCTION SET OF DRAWINGS WHICH CONTAINS THE APPROVAL OF THE GOVERNMENT AGENCY/UTILITY SIGNED ON THE COVER SHEET OF THE PLANS. THE CONTRACTOR SHALL NOT PLACE BIDS OR START CONSTRUCTION ON A SET OF DRAWINGS UNSIGNED BY THE GOVERNMENT AGENCY AND/OR MARKED "NOT FOR CONSTRUCTION".

4 RECORD DRAWINGS

4.1 IT IS THE RESPONSIBILITY OF THE CONTRACTOR TO PROVIDE AND KEEP AN UPDATED RECORD SET OF AS-BUILT INFORMATION DRAWINGS IN GOOD CONDITION ON THE JOB SITE AND PROVIDE THE DESIGN ENGINEER AT COMPLETION OF THE WORK, WITH THE RECORD SET SHOWING FIELD VERIFIED LOCATIONS OF ALL VALVES, BOXES, MANHOLES, UTILITY POLES, PIPE SLEEVES, UTILITY ENCASEMENT AND OTHER UTILITY LINES AND EQUIPMENT ABOVE AND BELOW GROUND WHICH THE CONTRACTOR ENCOUNTERS AND INSTALLS IN HIS AREA OF WORK.

4.2 ACCEPTANCE OF THE COMPLETED PAVING, GRADING OR UTILITY INSTALLATION WILL NOT BE GIVEN UNTIL REPRODUCIBLE AS-BUILT PLANS HAVE BEEN SUBMITTED BY THE ENGINEER AND APPROVED BY THE LOCAL GOVERNING AGENCY.

5 OBSERVATION

5.1 ALL MATERIALS USED AND ALL WORK DONE BY THE CONTRACTOR SHALL BE SUBJECT AT ALL TIMES TO THE INSPECTION, TESTING AND APPROVAL OF THE ENGINEER AND GOVERNING AGENCY. SPECIAL INSPECTION AND TESTING SERVICES SHALL BE PROVIDED AT THE OWNER'S EXPENSE, AS REQUIRED BY THE TOWN ENGINEER.

5.2 THE CONTRACTOR SHALL CONTACT THE APPROPRIATE PUBLIC UTILITY COMPANIES FOR INSPECTION OF TRENCHING, BEDDING AND BACKFILLING DONE IN CONJUNCTION WITH INSTALLATION OF THOSE UTILITIES ON THIS PROJECT.

5.3 SUBMITTAL OF AN ENGINEER'S CERTIFICATE OF COMPLETION IS REQUIRED BY A.D.E.Q. FOR ALL WATER AND SEWER SYSTEM CONSTRUCTION. RELATED INSPECTION AND TESTING SHALL BE PROVIDED BY THE OWNER'S ENGINEER AT THE OWNER'S EXPENSE.

5.4 SOILS COMPACTION TEST RESULTS MUST BE SUBMITTED TO THE ENGINEER'S OFFICE FOR ALL FILL MATERIAL FOR ROADS, TRENCH BACKFILL AND SITE FILL MATERIALS UNDER SLABS AND STRUCTURES. NO FILL MATERIALS SHALL BE PLACED WITHOUT TESTING DURING PLACEMENT. NO EARTH MATERIAL SHALL BE PLACED WITHOUT APPROVAL OF THE PREVIOUS LIFTS. THE CONTRACTOR SHALL SUBMIT ALL TEST RESULTS TO THE DESIGN ENGINEER AND GOVERNMENTAL AGENCIES.

5.5 CONTRACTOR SHALL SUBMIT A SCHEDULE, APPROVED IN WRITING BY A QUALIFIED CONSULTING TESTING AGENCY, FOR FREQUENCY, LOCATION AND TYPE OF ALL PROJECT TESTING. THE CONTRACTOR WILL BE RESPONSIBLE FOR SCHEDULING AND COORDINATION OF ALL TESTING INCLUDING THE FOLLOWING ITEMS WHICH SHALL BE TESTED IN ACCORDANCE WITH MAG SPECIFICATIONS...

1. SUBGRADE COMPACTION
2. BASE COURSE COMPACTION
3. ASPHALT PAVEMENT MIX DESIGN QUALITY
4. CONCRETE STRENGTH
5. TRENCH BEDDING AND BACKFILL
6. TESTING FOR UTILITIES, PIPING AND DRAINAGE SYSTEMS

5.6 THE TOWN SHALL BE NOTIFIED BY THE CONTRACTOR 24 HOURS PRIOR TO BEGINNING DIFFERENT PHASES OF CONSTRUCTION SO THAT CITY INSPECTIONS MAY BE SCHEDULED.

6 FINAL ACCEPTANCE

6.1 FINAL ACCEPTANCE OF THE CONSTRUCTION, BY THE TOWN ENGINEER, IS REQUIRED BEFORE RELEASING OF A PERMIT AND OR TRANSFERRING OWNERSHIP OF THE IMPROVEMENTS TO THE CITY.

6.2 APPROVAL OF A PORTION OF THE WORK IN PROGRESS DOES NOT GUARANTEE ITS FINAL ACCEPTANCE. TESTING AND EVALUATION MAY CONTINUE UNTIL WRITTEN FINAL ACCEPTANCE OF A COMPLETE WORKABLE UNIT. ACCEPTANCE OF COMPLETED IMPROVEMENTS WILL NOT BE GIVEN UNTIL DEFECTIVE OR UNAUTHORIZED WORK IS REMOVED, AND FINAL CLEANUP IS COMPLETE.

7 UTILITIES

7.1 A UTILITY COORDINATION MEETING SHALL BE COORDINATED BY THE CONTRACTOR PRIOR TO THE START OF ANY WORK. ALL UTILITY ISSUES SHALL BE ADDRESSED IN ACCORDANCE WITH MAG SECTION 105.6.

7.2 LOCATION OF UNDERGROUND UTILITIES SHALL BE ACCOMPLISHED IN ACCORDANCE WITH ARS 40-360.22 PRIOR TO ANY EXCAVATION. BLUE STAKE SHALL BE CALLED AT 1-800-STAKE-IT FOR ACCURATE LOCATION OF UTILITIES AS NECESSARY AND PRIOR TO ANY EXCAVATION. UTILITIES IF INDICATED ON PLANS ARE APPROXIMATE LOCATIONS ONLY, TAKEN FROM THE UTILITY COMPANY MAPS. IF THE CONTRACTOR ENCOUNTERS ANY LINES NOT INDICATED ON THE DRAWINGS OR MARKED IN THE FIELD BY THE UTILITY COMPANY THAT MAY INTERFERE WITH HIS WORK, HE SHALL NOTIFY THE APPROPRIATE UTILITY COMPANY IMMEDIATELY FOR DISPOSITION OF THOSE FACILITIES.

7.3 THE CONTRACTOR IS RESPONSIBLE FOR PREPARATION OF GRADE, TRENCHING, BACKFILLING, PAD CONSTRUCTION AND CONCRETE PADS FOR UTILITY EQUIPMENT INSTALLED ON THIS PROJECT. CONTRACTOR SHALL CONTACT LOCAL UTILITY COMPANIES FOR DETAILS AND REQUIREMENTS.

7.4 UTILITIES MUST BE LOCATED TO MINIMIZE INTERFERENCE WITH ONE ANOTHER, TO PROVIDE REQUIRED HORIZONTAL AND VERTICAL SEPARATIONS, AND TO PROVIDE MAINTENANCE ACCESS WITHOUT VIOLATING EASEMENT BOUNDARIES. SEPARATION BETWEEN UTILITIES PER MAG STANDARD

7.5 ALL UTILITY SLEEVES SHALL BE PLACED PRIOR TO SUBBASE CONSTRUCTION AND PAVING. CONTACT APPROPRIATE UTILITY COMPANIES FOR REQUIREMENTS IN ALL AREAS.

7.6 ALL WATER MAINS, APPURTENANCES, AND INSTALLATION SHALL CONFORM TO A.W.W.A. STANDARDS AND ARIZONA DEPARTMENT OF ENVIRONMENTAL QUALITY, AND TOWN OF JEROME REQUIREMENTS. WATER SYSTEM SHALL BE TESTED PER A.D.E.Q. BULLETIN NO. 10 TO THE APPROPRIATE A.W.W.A. STANDARDS.

7.7 ALL FIRE HYDRANTS SHALL MEET ALL REQUIREMENTS OF A.W.W.A. C-509-80 AND TOWN OF JEROME REQUIREMENTS.

8 CONSTRUCTION STAKING

8.1 THE ACCURACY OF ALL CONSTRUCTION WORK SHALL BE MAINTAINED AND VERIFIED BY THE OWNER'S SURVEYOR AT THE OWNER'S EXPENSE BY PROVIDING CONSTRUCTION STAKING SUITABLE TO THE TOWN ENGINEER. STAKES WILL BE SET ESTABLISHING LINES AND GRADES (FINISH OR FLOWLINE) FOR ALL CONSTRUCTION INCLUDING ROADS, CURB AND GUTTER, SIDEWALKS, UTILITIES, STRUCTURES, AND OTHER WORK AS CONSIDERED NECESSARY BY THE ENGINEER. ALL SURVEY CONTROL SHALL BE SET BY THE OWNER'S SURVEYOR FROM MONUMENTS ACCEPTABLE TO THE ENGINEER.

9 GRADING AND EARTHWORK

9.1 PERFORM ALL EARTHWORK GRADING, CUTTING AND FILLING AS PER THE PROJECT SOILS REPORT* AND ALL ADDENDA. ALL WORK TO BE COORDINATED AS PER THE SWPPP.

9.2 NO GRADING OR TRENCHING WORK SHALL BEGIN PRIOR TO SUPPORTING AND PROTECTING EXISTING ONSITE AND ADJACENT PROPERTY FROM SETTLING, CRACKING, OR OTHER DAMAGE WHICH MIGHT RESULT. CONTRACTOR SHALL VERIFY FROM SOILS REPORT RECOMMENDATIONS THE DEGREE OF DIFFICULTY REQUIRED FOR TRENCHING AND EXCAVATION WORK BASED ON DEPTH AND TYPES OF MATERIALS TO BE ENCOUNTERED.

9.3 WATER SOURCE: THE CONTRACTOR SHALL MAKE THE NECESSARY ARRANGEMENTS FOR OBTAINING ALL WATER REQUIRED FOR SOIL COMPACTION, DRINKING PURPOSES AND DUST CONTROL. (MAG SPEC 225)

9.4 CLEARING AND GRUBBING: EXAMINE SITE AND PROVIDE NECESSARY EQUIPMENT AND LABOR TO REMOVE FROM THE SITE AND DISPOSE OF STUMPS, ROOTS, ROCKS, LOOSE FILL, VEGETATION, DEBRIS, AND ANY OTHER OBJECTIONABLE MATERIALS FROM THE BUILDING AND FILL AREAS. CLEAN, UNCLASSIFIED ONSITE SOILS MAY BE USED IN GENERAL AS FILL MATERIAL. SEE MAG SPECIFICATION SECTIONS 201 AND 215.

9.5 TOPSOIL THAT WILL BE AFFECTED BY ROUGH GRADING OR EXCAVATION SHALL BE STOCKPILED ON THE SITE SEPARATELY AND SHALL NOT BE USED FOR FILL, BUT SHALL BE CONSERVED AND USED FOR FINE AND FINISH GRADING.

9.6 SITE DRAINAGE: CONSTRUCTION OF ALL SWALES, CHANNELS, DRAINAGE PIPES, DRAINAGE STRUCTURES AND BANK PROTECTION SHALL BE CONSTRUCTED DURING THE FIRST PHASES OF SITE CONSTRUCTION TO PROTECT ALL OTHER CONSTRUCTION FROM SURFACE WATERS. DIVERT RUN OFF WATER AROUND CONSTRUCTION OPERATIONS. CARE SHALL BE TAKEN BY THE CONTRACTOR NOT TO ADVERSELY AFFECT ADJACENT PROPERTIES. DRAIN EXCAVATIONS BY PUMPING OR OTHER SATISFACTORY METHOD TO PREVENT SOFTENING OF THE FOUNDATION SOILS, UNDERCUTTING OF FOOTINGS, OR OTHER ACTIONS DETRIMENTAL TO PROPER CONSTRUCTION PROCEDURES. ALL WORK TO BE COORDINATED AS PER THE SWPPP.

9.7 THE CONTRACTOR SHALL PROVIDE POSITIVE DRAINAGE AWAY FROM ALL WALLS AND FOUNDATIONS. ALL STORM DRAINS, DRAIN LINES, OVERFLOWS, OUTLETS, AND/OR OTHER DRAINAGE TYPE OUTLETS WHICH CONDUCT MOISTURE NEAR THE STRUCTURES SHALL BE POSITIVELY DRAINED AWAY FORM THE STRUCTURE. NO WATER SHALL BE PERMITTED TO POND NEAR STRUCTURES OR FOUNDATIONS. ALL DRAINAGE SHALL BE CHANNELED AND TAKEN A MINIMUM OF 10 FEET AWAY FROM ALL STRUCTURES.

9.8 SUBGRADE PREPARATION: IF THE NATURAL SUBGRADE IS LESS THAN THE REQUIRED DENSITY, IT SHALL BE SCARIFIED AND COMPACTED TO A MINIMUM DEPTH OF TWELVE INCHES OR AS NOTED IN THE SOILS REPORT IMMEDIATELY PRIOR TO PLACING SUBSEQUENT FILL MATERIAL THEREON. THE CONTRACTOR IS RESPONSIBLE FOR MAINTENANCE AND REPAIR OF DAMAGE TO PREPARED SUBGRADE CAUSED BY CONTRACTORS OPERATIONS OR PUBLIC TRAFFIC UNTIL ACCEPTANCE OF PROJECT. NO MATERIALS SHALL BE PLACED UPON THE PREPARED SUBGRADE UNTIL IT MEETS THE SPECIFIED REQUIREMENTS. ROADWAY SUBGRADE COMPACTION INCLUDES SUBGRADE UNDER ALL PAVEMENT, CURB, SIDEWALKS, SHOULDERS AND FILL SLOPES. SUBGRADE TOLERANCES SHALL BE AS SPECIFIED IN MAG SECTION 301. OPEN LANDSCAPED AREAS SHALL BE GRADED TO +/- 0.20 FEET.

9.9 EARTH FILL: AREAS TO BE FILLED SHALL BE LEVELED TO PROVIDE A LEVEL BASE TO SUPPORT FILL MATERIALS. SUBGRADE AND SUBBASE AREAS REQUIRING FILL MATERIAL SHALL BE SCARIFIED MOISTENED AND COMPACTED PRIOR TO PLACING FILL. ALL FILL, SUBGRADE AND SUBBASE MATERIALS SHALL BE COMPACTED TO SPECIFIED DENSITIES AT OR NEAR OPTIMUM MOISTURE CONTENTS AS VERIFIED AND RECOMMENDED BY THE SOILS ENGINEER. PLACE FILL IN HORIZONTAL LIFTS NOT EXCEEDING EIGHT INCHES IN LOOSE THICKNESS BEFORE COMPACTION. SLOPED SURFACES SHALL BE PLOWED, STEPPED, AND BENCHED SO THAT THE FILL MATERIAL WILL BOND WITH THE EXISTING MATERIAL. BENCH AT THE TOE OF FILL SLOPES AND PERIODIC INTERVALS UP THE FILL SLOPES BENCHES.

9.10 IT IS THE RESPONSIBILITY OF THE CONTRACTOR TO CONTACT THE TESTING COMPANY FOR SCHEDULING OF COMPACTION TESTING. THE FREQUENCY OF DENSITY AND MOISTURE TESTS REQUIRED FOR ADEQUATE CONTROL SHALL BE THE RESPONSIBILITY OF THE SOILS ENGINEER WHO SHALL CERTIFY TO THE ENGINEER AND CONTRACTOR AT PROJECT END THAT THE ROADBED FILL IS COMPACTED AS OUTLINED HEREIN. COMPACTION SHALL BE ACHIEVED BY MECHANICAL MEANS. IN NO CASE SHALL STRUCTURE BACKFILLING BE FLOOD WATER SETTLED.

9.11 ALL SLOPE CONSTRUCTION AND ROADWAY EXCAVATION SHALL CONFORM TO THE REQUIREMENTS OF MAG SPECIFICATIONS SECTIONS 201, 205, 211, 301, AND UBC SECTIONS 7009 AND 8010. CUT AND FILL SLOPES SHALL BE AS INDICATED ON THE DETAILS AND PLANS. CUT AND FILL SLOPE GRADIENTS SHALL NOT EXCEED 2:1 IN STEEPNESS WITHOUT WRITTEN AUTHORIZATION FROM THE SOILS ENGINEER AND EXAMINATION BY THE DESIGN ENGINEER. ALL SLOPE CONDITIONS SHALL BE PROVIDED WITH THE APPROPRIATE BENCHES AS SPECIFIED IN THE REFERENCE DOCUMENTS AND INDICATED ON THE PLANS. IF SOILS CONDITIONS ARE ENCOUNTERED WHICH DO NOT ALLOW THE ESTABLISHMENT OF THE INDICATED CUT OR FILL SLOPES, THE DESIGN ENGINEER AND SOILS ENGINEER SHALL BE CONTACTED IMMEDIATELY TO DETERMINE AN ADJUSTMENT TO THE SLOPE GRADIENT OR TO ESTABLISH A METHOD OF STABILIZATION ALL FILL SLOPES SHALL BE COMPACTED AS EACH LIFT OF FILL MATERIAL IS PLACED. ALL CUT AND FILL SLOPES SHALL BE UNIFORMLY GRADED TO LINES AND GRADES INDICATED. TOPS OF ALL CUT SLOPES SHALL BE ROUNDED AND ALL UNSTABLE AND LOOSE MATERIAL AT TOP OF SLOPE SHALL BE REMOVED. TOP OF CUT SLOPES OVER 10' HIGH SHALL BE PROVIDED WITH BROW DITCHES FOR DRAINAGE. ALL CUT AND FILL SLOPES SHALL BE REVEGETATED WITH A MIXTURE OF NATIVE GRASSES AND WILD FLOWER SEED OR AS SPECIFIED WITHIN THE LANDSCAPE PLANS. COMPACT ALL SHOULDERS AND BACKFILLS BEHIND ALL STRUCTURE AND WALLS.

9.12 COMPACT TO THE FOLLOWING SPECIFIED PERCENT OF MAXIMUM DENSITY AS DETERMINED IN ACCORDANCE WITH ASTM D698 AND MAG SECTION 211 OR AS DIRECTED IN THE SOILS REPORT.

MINIMUM PERCENT COMPACTION
SUBGRADE SOIL:
ROADWAY AND STRUCTURE AREAS----------95
PAVED AREAS (PAVEMENTS, SIDEWALKS, & PADS)---------95
EARTH FILL:
ROADWAY AND STRUCTURE AREAS----------95
PAVED AREAS (PAVEMENTS, SIDEWALKS, & PADS)---------95
GRASSED AND PLANTING AREAS----------85
AGGREGATE BASE COURSE----------100
BACKFILL AROUND STRUCTURES----------95
BACKFILL FOR UTILITY TRENCHES (PER MAG SECTION 601). PROVIDE TYPE 1 BACKFILL OR AS DIRECTED BY APPROPRIATE UTILITY REQUIREMENTS. BACKFILL FOR TRENCHES WITHIN 10' OF STRUCTURES AND WALLS SHALL BE COMPACTED TO 95% UNLESS DIRECTED OTHERWISE BY ENGINEER.

9.13 EXCAVATION: EXCAVATE TO THE DIMENSIONS AND DEPTHS INDICATED ON THE DRAWINGS. FOUNDATIONS SHALL REST ON ENGINEERED COMPACTED FILL OR UNDISTURBED NATURAL SOILS AT GRADE ELEVATIONS INDICATED. IF SUITABLE SOIL IS NOT REACHED AT THE DEPTHS INDICATED, THE CONTRACTOR SHALL IMMEDIATELY NOTIFY THE SOILS ENGINEER AND ENGINEER. THE CONTRACTOR WILL BE DIRECTED, IN WRITING, TO EXCAVATE TO THE DEPTH OF SUITABLE SOIL. EXCAVATION FOR FOUNDATIONS WHICH ARE CARRIED BELOW THE DEPTHS INDICATED SHALL HAVE THE CONCRETE EXTENDED TO THE BOTTOM OF THE EXCAVATION AT THE CONTRACTOR'S EXPENSE. SEE MAG SPECIFICATION SECTION 206.

9.14 WATERING: CAREFULLY WATER EARTH FILL DURING PLACING BY MEANS OF A FINE SPRAY OR OTHER APPROVED METHOD, SO THAT EACH LAYER IS THOROUGHLY AND UNIFORMLY WETTED. MOISTURE CONTENT OF THE MATERIAL SHALL BE CAREFULLY CONTROLLED AT ALL TIMES AND CHECKED AT PROPER INTERVALS TO INSURE CORRECT MOISTURE FOR COMPACTION SPECIFIED. SEE MAG SECTION 225 AND SOILS REPORT.

10 PAVING

10.1 COMPLETE ASPHALTIC CONCRETE PAVEMENT INSTALLATION SHALL INCLUDE BUT NOT BE LIMITED TO THE FOLLOWING:
A. TACK COATING OF ALL SURFACES, UNDILUTED .02 TO .10 GAL/SY, DILUTED 1:1 MIXTURE, .05 TO .15 GAL/SY, OR AS DIRECTED.
B. SEAL COATING: SEAL COATING WITHIN THE RIGHT-OF-WAY SHALL BE A FOG SEAL COAT.
C. PAINT FOR PAVEMENT STRIPING AND MARKING SHALL CONFORM TO FEDERAL SPEC. NO. TTP-155E, "PAINT, TRAFFIC, HIGHWAY, WHITE AND YELLOW". COLORS FOR PAVEMENT MARKING AND STRIPING SHALL BE AS SPECIFIED BY THE TOWN ENGINEER.
D. TRAFFIC CONTROL DEVICES: SIGNS AND PAVEMENT

11 FIELD INSPECTION

11.1 THE CONTRACTOR SHALL CAREFULLY PRESERVE ALL STAKES, REFERENCE AND CONTROL POINTS, ETC. AGAINST DESTRUCTION AND SHALL PROMPTLY NOTIFY THE ENGINEER OF ANY STAKES WHICH HAVE BEEN DISTURBED.

11.2 OWNER'S REGISTERED SURVEYOR SHALL BE NOTIFIED TWO WORKING DAYS (48 HOURS) MINIMUM PRIOR TO FIELD STAKING SCHEDULING.

11.3 ANY QUESTIONS RAISED RELATIVE TO ACCURACY OF IMPROVEMENT INSTALLATION SHALL NOT BE RAISED SUBSEQUENT TO COMPLETION OF THE WORK UNLESS ALL SURVEY STAKES ARE MAINTAINED INTACT. SHOULD SUCH STAKES NOT BE PRESENT AND VERIFIED AS TO THEIR ORIGIN, NO CLAIM FOR ADDITIONAL COMPENSATION FOR CORRECTION SHALL BE PRESENTED TO ANY PARTY AND SUCH WORK SHALL BE CORRECTED BY THE CONTRACTOR AT HIS EXPENSE.

12 SUSPENSION OF WORK

12.1 THE ENGINEER OR HIS AUTHORIZED REPRESENTATIVE MAY SUSPEND THE WORK BY WRITTEN NOTICE WHEN, IN HIS JUDGMENT, PROGRESS IS UNSATISFACTORY, WORK BEING DONE IS UNAUTHORIZED OR DEFECTIVE, WEATHER CONDITIONS ARE UNSUITABLE, OR THERE IS DANGER TO THE PUBLIC HEALTH OR SAFETY.

13 WARRANTY

13.1 ANY DEFECTS WHICH APPEAR IN THE WORK WITHIN TWO YEARS FROM THE DATE OF ACCEPTANCE AND WHICH ARE DUE TO IMPROPER WORKMANSHIP OR INFERIOR MATERIALS SUPPLIED SHALL BE CORRECTED BY OR AT THE EXPENSE OF THE CONTRACTOR.

14 EROSION CONTROL NOTES

(SPECIFICATIONS FOR PERMANENT SEEDING)

14.1 SITE PREPARATION
- A. INSTALL NECESSARY SURFACE WATER CONTROL MEASURES PRIOR TO PLANTING PERMANENT SEEDING.
- B. GRADE TO PERMIT USE OF CONVENTIONAL EQUIPMENT FOR SEEDBED PREPARATION.
- C. PROVIDE ADEQUATE DRAINAGE WHERE INTERNAL WATER MOVEMENT, ESPECIALLY AT TOES OF SLOPES, MAY CAUSE SEEPS OR SLIPPAGE BEFORE SEEDING IS WELL ESTABLISHED.

14.2 SEEDBED PREPARATION A. AS PRACTICAL, PERFORM ALL CULTURAL OPERATIONS AT RIGHT ANGLES TO THE SLOPE. B. IMMEDIATELY BEFORE SEEDING, RAKE OR OTHERWISE LOOSEN PLANTING SURFACE TO PROVIDE A SMOOTH, FRIABLE SURFACE FREE OF EARTH CLODS, HUMPS AND DEPRESSIONS, AND DISPOSE OF LOOSE STONES HAVING A DIMENSION GREATER THAN ONE INCH AND DEBRIS BROUGHT TO THE SURFACE DURING CULTIVATION.

14.3 PLANTING A. APPLY SEED MIX AT THE RATE OF 11 POUNDS PER ACRE. SHALL CONTAIN THE FOLLOWING PROPORTION OF PURE LIVE SEED: SAND DROPSEED (SPOROBOLUS CRYPTANDRUS) 1 LB SIDEOATS GRAMA (BOUTELOUS CURTIPENDULA)5 LB CRESTED WHEATGRASS (AGROPYRON CRISTATUM) 5 LB B. APPLY SEED IN TWO DIRECTIONS AT RIGHT ANGLES TO EACH OTHER WITH HALF THE SPECIFIED APPLICATION RATE APPLIED IN EACH DIRECTION. C. IMMEDIATELY AFTER SEEDING, UNIFORMLY SPREAD SCREENED MANURE AT THE RATE OF ONE CUBIC YARD PER 1000 SQUARE FEET AND WATER UNTIL THE GROUND IS WET TO A MINIMUM DEPTH OF TWO INCHES. D. HYDRAULIC SEEDING USING 1500 POUNDS OF WOOD CELLULOSE FIBER PER ACRE MAY BE UTILIZED IN LIEU OF PLANTING.

14.4 MAINTENANCE A. PROTECT PLANTED AREAS FROM GRAZING, FIRE, TRAFFIC, AND WEED GROWTH. B. MAINTAIN PLANTED AREAS UNTIL A GOOD STAND OF GRASS IS ESTABLISHED. AREAS AS REQUIRED IF NO GROWTH IS PRESENT WITHIN 15 DAYS OF PLANTING.

15 TEMPORARY EROSION CONTROL

15.1 EROSION CONTROL BERMS AND ROCK CHECK DAMS
- A. PROVIDE EARTHEN BERMS AT TOES OF SLOPES REMAINING BARE BETWEEN CONSTRUCTION PHASES.
- B. PLACE TEMPORARY ROCK CHECK DAMS IN ROAD DITCHES AND CHANNELS IF RIP-RAP PROTECTION WILL NOT BE PROVIDED WITHIN 60 DAYS.

15.2 CONTRACTOR SHALL BE RESPONSIBLE FOR PROVIDING EROSION CONTROL MEASURES SUCH AS SAND BAGGING, TEMPORARY DE-SILTING BASIN CONSTRUCTION BERMS, VISQUEEN, ETC. TO PROTECT ADJOINING PROPERTIES FROM EROSION.

16 GENERAL CONSTRUCTION NOTES

16.1 ALL CORRUGATED METAL PIPE TO BE 14 GAUGE, UNLESS OTHERWISE APPROVED BY THE DESIGN ENGINEER.

16.2 ALL CORRIGATED METAL PIPE SHALL HAVE FLARED END SECTIONS, EXCEPT WHERE HEADWALLS ARE USED.

16.3 ALL DRAINAGE CULVERTS AND PIPES SHALL HAVE A MINIMUM COVER OF 24" OR AS SPECIFIED.

16.4 ADDITIONAL CARE SHALL BE TAKEN TO PROTECT ALL CMP DURING CONSTRUCTION.

16.5 RETAINING WALLS SHALL BEAR ONTO NATURAL BEDROCK, OR COMPACTED SOIL WHICH HAS A BEARING VALUE OF 3,000 P.S.F. VERIFICATION OF SAID BEARING VALUE TO BE PROVIDED BY THE SOILS ENGINEER.

16.6 RIPRAP MATERIAL SHALL BE AS SPECIFIED TO A DEPTH OF TWICE THE SIZE OF Dso UNDER LAYING A FILLER LAYER OF Dso =3/4" TO A DEPTH OF 10" OR GEOTEXTILES. THE GRADATION OF RIPRAP SHOULD FOLLOW A SMOOTH CURVE. THE RATIO TO THE LARGEST SIZE ROCK TO Dso SHOULD BE EQUAL TO OR LESS THAN 2 (Dso/Dso ~0.5). THE RIPRAP SHOULD BE HARD, DENSE, DURABLE AND RESISTANT TO WEATHER AND FRACTURE. ALL RIPRAP TO BE HAND PLACED IN AN INTERLOCKING POSITION. FILLER MATERIAL TO BE WELL GRADED GRAVEL AS SPECIFIED. MATERIAL FURNISHED FOR RIPRAP SHALL CONFORM TO MAG SPEC 220.2.

16.7 ALL CONCRETE AND REBAR PLACEMENT PER MAG SPEC 505.

16.8 CONCRETE TESTING PER MAG SPEC 725.

16.9 ALL CONCRETE TO BE CLASS B (2500PSI) IF NOT SPECIFIED.

16.10 MINIMUM COVER ON ALL REBAR TO BE MIN 1" UNLESS OTHERWISE SPECIFIED.

16.11 MINIMUM LAP AT REBAR SPLICES TO BE 1' UNLESS OTHERWISE SPECIFIED.

16.12 ALL MANHOLE FRAMES TO HAVE 12" ANCHORS SPACED A MINIMUM OF 12" RADIALLY AROUND FRAME.

16.13 CONCRETE FOR FOOTINGS AND PADS AHALL BE CLASS A (3000 PSI)

SURVEY

1. TOPOGRAPHIC SURVEY BY KENNEY AERIAL MAPPING, INC., PHOENIX, AZ, DATED NOVEMBER 2022 AND SUPPLEMENTED IN FEBRUARY 2023. ADDITIONAL TOPOGRAPHIC SURVEY DATA PERFORMED BY SEC, INC. COORDINATES ARE RELATIVE TO NAD 83, AZ STATE PLANE CENTRAL ZONE, INTERNATIONAL FEET. ELEVATIONS RELATIVE TO NAVD 83. SURVEY CONTROL ON SHEET C2.0.

TREE NOTES

1. ALL EXISTING TREES AND SHRUBS NOT AFFECTED BY BUILDING CONSTRUCTION OR ROAD DEVELOPMENT MUST BE FENCED WITH A CONSTRUCTION ENVELOPE FENCE TO PROTECT THEM DURING CONSTRUCTION

2. NO TREES TO BE PLACED OVER/ON SEWER LINE

ADEQ WATER AND SEWER SYSTEM NOTES

MANHOLES

ALL MANHOLES SHALL BE 4-FT. ID PRECAST CONCRETE WITH POURED-IN-PLACE CONCRETE BASE AND TRAFFIC BEARING RING AND COVER. ALL COVERS SHALL BE 2-FT. IN DIAMETER AND SHALL BE MARKED "SEWER". TEST MANHOLES FOR WATER TIGHTNESS (INFILTRATION) PER R 18-9-E301.4.01.D.3.F. WATER TIGHTNESS SHALL BE TESTED BY EITHER 1) FILLING THE MANHOLE WITH WATER AND ENSURING THAT THE DROP IN WATER LEVEL DOES NOT EXCEED 0.0034 OF THE TOTAL MANHOLE VOLUME PER HOUR, OR 2) AIR PRESSURE TESTING USING THE "STANDARD TEST METHOD FOR CONCRETE SEWER MANHOLES BY NEGATIVE AIR PRESSURE (VACUUM) TEST", ASTM C1244-02a1 (2002). TEST 100% OF ALL MANHOLES. MANHOLES SHALL CONFORM TO A.D.E.Q. AND M.A.G. SPECIFICATIONS. CONSTRUCTION SHALL CONFORM TO M.A.G. STD. DTLS. 420-1 AND 420-2.'

CONCRETE

CLASS A CONCRETE SHALL HAVE A MINIMUM 28 DAY COMPRESSIVE STRENGTH OF 2000 PSI.

PIPE

GRAVITY SEWER PIPE SHALL BE PVC, SDR-26 AND CONFORM TO ASTM D-1784 AND ASTM D-3034. SEALS SHALL CONFORM TO ASTM F-477. PIPE SHALL BE JOINED BY BELL AND SPIGOT TYPE JOINTS. FITTINGS SHALL CONFORM TO ASTM D-3212. GRAVITY SEWER PIPE SHALL BE TESTED FOR DEFLECTION AND LEAKAGE. SHORT TERM DEFLECTION TESTING SHALL BE PERFORMED AFTER COMPLETE BACKFILL BUT PRIOR TO INSTALLATION OF FINISH SURFACE MATERIAL. A SHORT TERM DEFLECTION IN EXCESS OF 5% SHALL BE CONSIDERED UNACCEPTABLE AND PIPE SHALL BE REPAIRED, OR REPLACED AND RETESTED. A MINIMUM OF 100% OF GRAVITY SEWER SHALL BE DEFLECTION TESTED. SEWER PIPE SHALL BE TESTED FOR LEAKAGE USING LOW PRESSURE AIR TESTING PER "STANDARD TEST METHOD FOR INSTALLATION ACCEPTANCE OF PLASTIC GRAVITY SEWER LINES USING LOW PRESSURE AIR", ASTM F 1417-92, REAPPROVED 1998. TEST 100% OF ALL SEWER LINES. TEST THE TOTAL LENGTH OF THE SEWER LINE FOR UNIFORM SLOPE BY LAMP LIGHTING, REMOTE CAMERA OR SIMILAR METHOD APPROVED BY ADEQ AND RECORD THE RESULTS.

DUCTILE IRON PIPE SHALL BE AWWA C-150, CLASS 350 AND SHALL BE TESTED FOR LEAKAGE PER AWWA STANDARD C-600.

A MINIMUM HORIZONTAL DISTANCE OF 6-FT SHALL BE MAINTAINED BETWEEN MAINS AND GRAVITY SEWERS.

MATERIAL

ALL MATERIALS & PRODUCTS THAT COME INTO CONTACT WITH DRINKING WATER OR DRINKING WATER TREATMENT CHEMICALS MUST COMPLY WITH AWWA STANDARDS & NSF STANDARD 61. ANY "OR EQUAL' SUBSTITUTION SHALL ALSO MEET NSF STANDARD 61.

ALL MATERIALS USED IN THE INSTALLATION OF WATER MAINS SHALL BE PURSUANT TO AAC R-18-4-119, & SHALL BE NSF APPROVED FOR POTABLE WATER.

DISINFECTION

WATER MAINS. SHALL BE DISINFECTED IN ACCORDANCE WITH ADEQ ENGINEERING BULLETIN NO.8 "DISINFECTION OF WATER SYSTEMS".

TESTING

ONE HUNDRED PERCENT (100%) OF PIPE LINES SHALL BE PRESSURE AND LEAK TESTED IN ACCORDANCE WITH AWWA C-600, SECTION 4 AND MAG SECTION 611. MINIMUM TEST PRESSURES SHALL BE 200 PSI PLUS ALLOWANCE FOR WATER HAMMER.

AFTER PRESSURE AND LEAK TESTING IS SHOWN TO BE SATISFACTORY, WATER LINES SHALL BE DISINFECTED BY CHLORINATION IN ACCORDANCE WITH AWWA C-601, MAG SECTION 610.15, AND ADEQ BULLETIN 8. ALL VALVES SHALL BE WORKED INTERMITTENTLY FOR A PERIOD OF 24 HOURS FOLLOWING CHLORINATION.

WATER SYSTEM THRUST BLOCKING AND/OR JOINT RESTRAINT

PIPE LINES SHALL BE PROVIDED WITH CONCRETE THRUST BLOCKS AT ALL CHANGES IN DIRECTION AND SIZE AND AT ALL TEES, VALVES, PLUGS, AND DEAD ENDS, PER MAG STANDARD DETAILS 301 AND 380 AND YAG STANDARD DETAIL 3-03. PIPE LINES MAY ALSO BE PROVIDED WITH RESTRAINED JOINTS AT ALL CHANGES IN DIRECTION AND SIZE AND AT ALL TEES, VALVES, PLUGS, AND DEAD ENDS, PER MAG STANDARD DETAILS 302 AND 303.

ADEQ WATER & SEWER NOTES (CONT.)

TRENCHING AND BACKFILLING

ROUGH GRADING SHALL BE COMPLETED PRIOR TO INSTALLATION OF UNDERGROUND UTILITIES.

TRENCH BOTTOM SHALL BE COMPACTED BY SUITABLE MEANS APPROVED BY THE ENGINEER PRIOR TO PLACEMENT OF BEDDING MATERIAL. BEDDING MATERIAL SHALL BE PLACED TO PROVIDE UNIFORM AND ADEQUATE LONGITUDINAL SUPPORT UNDER THE PIPE. THE CONTRACTOR SHALL ENSURE THAT A MINIMUM COMPACTED DEPTH OF 6" IS MAINTAINED UNDERNEATH THE PIPE. BELL HOLES SHOULD BE PROVIDED AT EACH JOINT TO PERMIT PROPER ASSEMBLY WHILE MAINTAINING UNIFORM SUPPORT.

BEDDING MATERIAL SHALL BE ROUNDED GRAVEL WITH A MAXIMUM PARTICLE SIZE OF 1 1/2" AND SHALL BE NON-PLASTIC. WHERE DEPTH OF COVER IS 2-FT. OR LESS, BACKFILL MATERIAL SHALL BE ROUNDED GRAVEL WITH A MAXIMUM PARTICLE SIZE OF 4" AND WITH NO MORE THAN 20% PASSING THE #200 SIEVE.

BACKFILL SHALL BE PLACED IN LAYERS OF NOT MORE THAN 8" LOOSE DEPTH AND COMPACTED TO ACHIEVE COMPACTION OF 95% OF THE MAXIMUM DENSITY AS DETERMINED BY AASHTO T-99 AND T-191 OR ASTM D-2922 AND D-3017. THE CONTRACTOR SHALL CONTRACT WITH AN INDEPENDENT TESTING LABORATORY TO PROVIDED COMPACTION TESTING. TESTS SHALL BE PROVIDED AT MINIMUM INTERVALS OF ONE TEST PER 50 CUBIC YARDS OF TRENCH BACKFILL. TEST RESULTS SHALL BE SUBMITTED DAILY TO THE ENGINEER.

TRENCHING, PIPELAYING, BACKFILLING, AND ALL OTHER CONSTRUCTION SHALL BE PERFORMED UNDER THE INSPECTION, COORDINATION, AND SUPERVISION OF A REGISTERED PROFESSIONAL CIVIL ENGINEER.

NO TRENCH SHALL BE FILLED WITH BEDDING MATERIAL OR BACKFILL UNTIL THE EXCAVATION AND PIPE LAYING, RESPECTIVELY, HAVE BEEN APPROVED BY THE OWNER OR HIS AUTHORIZED REPRESENTATIVE.

THE EXCAVATION METHOD EMPLOYED SHALL BE THE CONTRACTOR'S OPTION. MATERIAL SHALL NOT BE STOCKPILED TO A DEPTH OF MORE THAN 5 FEET ABOVE FINISHED GRADE WITHIN 25 FEET OF ANY EXCAVATION OR STRUCTURE. EXCAVATION SHALL EXTEND SUFFICIENT DISTANCE FROM WALLS AND FOOTINGS TO ALLOW PLACING AND REMOVAL OF FORMS, INSTALLATION OF SERVICES AND INSPECTION BY THE ENGINEER. WITHIN 12" OF FINISHED GRADE SHOWN ON THE DRAWINGS, AND FOR THE MANHOLES, FILL AND BACKFILL SHALL BE NATIVE MATERIAL, FEE FROM BROKEN CONCRETE, ORGANIC MATERIAL, OR OTHER DEBRIS WITH SUFFICIENT FINES TO FILL ALL VOIDS AND TO INSURE A UNIFORMLY COMPACTED MASS OF THE REQUIRED DENSITY AND HAVING A MAXIMUM SIZE OF 2 - ½ INCHES WITH 0 TO 20% MINUS #200. ALL FILL AND BACKFILL SHALL BE PLACED IN LAYERS OF NOT MORE THAN 8" LOOSE AND COMPACTED TO 95% OF MAXIMUM DENSITY, DETERMINED BY AASHTO TEST METHOD T-99, PRIOR TO PLACEMENT OF THE NEXT LAYER.

WATER AND SEWER SYSTEM DESIGN: MINIMUM DESIGN CRITERIA

WATER AND SEWER MAINS SHALL BE SEPARATED IN ORDER TO PROTECT PUBLIC WATER SYSTEMS FROM POSSIBLE CONTAMINATION. ALL DISTANCES ARE MEASURED PERPENDICULARLY FROM THE OUTSIDE OF THE SEWER MAIN TO THE OUTSIDE OF THE WATER MAIN. SEPARATION REQUIREMENTS ARE AS FOLLOWS:

1. A WATER MAIN SHALL NOT BE PLACED:
A. WITHIN SIX FEET, HORIZONTAL DISTANCE, AND BELOW TWO FEET, VERTICAL DISTANCE, ABOVE THE TOP OF A SEWER MAIN UNLESS EXTRA PROTECTION IS PROVIDED. EXTRA PROTECTION SHALL CONSIST OF CONSTRUCTING THE SEWER MAIN WITH MECHANICAL JOINT DUCTILE IRON PIPE OR WITH SLIP-JOINT DUCTILE IRON PIPE IF JOINT RESTRAINT IS PROVIDED. ALTERNATE EXTRA PROTECTION SHALL CONSIST OF ENCASING BOTH THE WATER AND SEWER MAINS IN AT LEAST SIX INCHES OF CONCRETE FOR AT LEAST TEN FEET BEYOND THE AREA COVERED BY THIS SUBPARAGRAPH.
B. WITHIN TWO FEET HORIZONTALLY AND TWO FEET BELOW THE SEWER MAIN.
2. NO WATER PIPE SHALL PASS THROUGH OR COME INTO CONTACT WITH ANY PART OF A SEWER MANHOLE. THE MINIMUM HORIZONTAL SEPARATION BETWEEN WATER MAINS AND MANHOLES SHALL BE SIX FEET, MEASURED FROM THE CENTER OF THE MANHOLE.
3. THE MINIMUM SEPARATION BETWEEN FORCE MAINS OR PRESSURE SEWERS AND WATER MAINS SHALL BE TWO FEET VERTICALLY AND SIX FEET HORIZONTALLY UNDER ALL CONDITIONS. WHERE A SEWER FORCE MAIN CROSSES ABOVE OR LESS THAN SIX FEET BELOW A WATER LINE, THE SEWER MAIN SHALL BE ENCASED IN AT LEAST SIX INCHES OF CONCRETE OR CONSTRUCTED USING MECHANICAL JOINT DUCTILE IRON PIPE FOR TEN FEET ON EITHER SIDE OF THE WATER MAIN.

TOPO FEATURES

- EXISTING SANITARY SEWER w/SIZE
- GUARDRAIL
- WASH
- RETAINING WALL
- DIRT ROAD
- PROPERTY LINE
- OVERHEAD POWER LINE w/POLE
- FENCE LINE
- UNKNOWN EXPOSED PIPE
- CULVERT
- MANHOLE
- AERIAL SURVEY PANEL PT
- SIGN
- POST
- GATE
- TREE OR BUSH

LEGEND
PROPOSED DEVELOPMENT

- CENTER LINE/BASE LINE
- RIP RAP
- FENCE
- GUARD RAIL
- SAFETY RAIL
- CULVERT
- DRAINAGE FLOWLINE
- RETAINING WALL
- SIGNS
- DRAINAGE FLOW DIRECTION

LEGEND
PROPOSED SANITARY SEWER

- PRESSURE SEWER MAIN
- GRAVITY SEWER MAIN
- SEWER MANHOLE
- SEWER CLEANOUT

LEGEND
PROPOSED WATER

- WATER MAIN
- WATER METER
- AIR RELEASE VALVE
- BLOW OFF VALVE
- GATE VALVE
- FIRE HYDRANT w/VALVE
- BACKFLOW PREVENTOR VALVE
- WELL
- IRRIGATION CONTROL VALVE
- PIPE END CAP

LEGEND
PROPOSED ELECTRIC/GAS/TV/TEL

- OVERHEAD POWER
- UNDERGROUND POWER
- GAS
- TELEPHONE
- COMMON UTILITIES (TV,TEL)
- TELEVISION
- UTILITY POLE
- TELEPHONE RISER
- CABLE T.V. RISER
- GAS METER
- ELECTRIC METER
- ELECTRIC TRANSFORMER
- GUY WIRE

ABBREVIATIONS

LF	LINEAR FEET
ADOT	ARIZONA DEPT. OF TRANSPORATION
ADEQ	ARIZONA DEPT. OF ENVIRONMENTAL QUALITY
MAG	MARICOPA ASSOCIATION OF GOVERNMENTS
MSD	MARICOPA ASSOCIATION OF GOVERNMENTS STANDARD DETAIL
MUTCD	MANUAL OF UNIFORM TRAFFIC CONTROL DEVICES
FF	FINISHED FLOOR ELEVATION
EG	EXISTING GRADE
FG	FINISHED GRADE
TW	FINISHED GRADE AT TOP BACK OF WALL
BW	FINISHED GRADE AT BOTTOM FACE OF WALL
INV	INVERT
FL	FLOW LINE
AB	AGGREGATE BASE COURSE
DG	DECOMPOSED GRANITE
ADA	AMERICANS WITH DISABILITIES ACT
ARV	AIR RELEASE VALVE
BOV	BLOW-OFF VALVE
PVI	POINT OF VERTICAL INTERSECTION
DIP	DUCTILE IRON PIPE
PVC	POLYVINYL CHLORIDE
FPVC	FUSIBLE POLYVINYL CHLORIDE
CMP	CORRUGATED METAL PIPE
HDPE	HIGH DENSITY POLYETHYLENE
EP OR EOP	EDGE OF PAVEMENT
SEC	SOUTHWESTERN ENVIRONMENTAL CONSULTANTS, INC
STA	STATION
TBD	TO BE DETERMINED
VC	VERTICAL CURVE
WWTP	WASTE WATER TREATMENT PLANT
NTS	NOT TO SCALE
SF	SQUARE FEET
EL OR ELEV	ELEVATION
GRD BRK	GRADE BREAK
CP	SURVEY CONTROL POINT
SW	SIDEWALK
CY	CUBIC YARDS

Item I.

NO	BY	DATE	REVISIONS	DATE	APP

Professional Engineer — CERTIFICATE NO. 49106 — KRISHAN GEVINDA GINIGE — 10/31/25 — REGISTERED — ARIZONA, U.S.A.

PREPARED BY:
DESIGNED BY:
DRAWN BY: MMW
CHECKED BY: KG
SCALE: AS SHOWN
DATE 10/31/25
JOB NO. 19-1101CE

TITLE: NOTES 2, LEGENDS, ABBREVIATIONS

JOB: JEROME WWTP — GRADING & UTILITIES PLANS — YAVAPAI COUNTY AZ

PREPARED BY:
SOUTHWESTERN ENVIRONMENTAL CONSULTANTS, INC
825 COVE PARKWAY
COTTONWOOD, AZ 86326
928-282-7787

SHEET
C1.1
8 OF 99 SHEETS

JOB NO. 19-1101CE

1684

S:\LAND PROJECTS 2004 ENGINEERING\19-1101CE JEROME WWTP\DWG\C3D\PLANS\NOTES_LEGENDS_DETAILS.DWG

SEC, Inc., All Rights Reserved. This document is protected under the United States Copyright Act. No part may be reproduced in any form or by any means or stored in a database or retrieval system, without the prior written permission of SEC, Inc. These plans/documents have been prepared using technical knowledge that would be applied by other qualified registrants who practice the same profession in the same area and at the same time. Efforts have been made to be as accurate as possible. However, plans/documents could contain unintentional technical inaccuracies, typographical errors or omissions. Users of these plans/documents should understand that it is highly probable that errors and omissions will occur in any plan/document preparation process.

S:\land projects 2004 Engineering\19-1101CE Jerome WWTP\DWG\C3D\Plans\XBGRAD-19-1101CE.dwgS:\LAND PROJECTS 2004 ENGINEERING\19-1101CE JEROME WWTP\DWG\C3D\PLANS\XBGRAD-19-1101CE.DWG

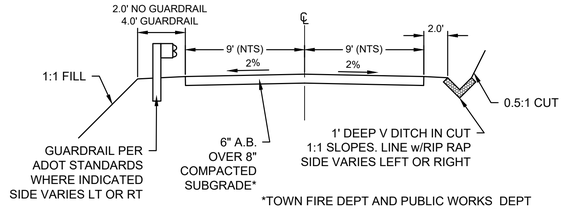

*TOWN FIRE DEPT AND PUBLIC WORKS DEPT HAVE APPROVED USING AB ROAD SURFACE

1 TYPICAL WWTP ACCESS ROAD
1"=6'

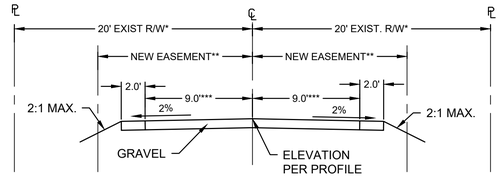

*NORTH DRIVE HAS 40' EXISTING RIGHT OF WAY
**NEW EASEMENT REQ'D. AT PRIVATE PROPERTY. WIDTH VARIES PER PLAN
***LANE WIDTH VARIES PER PLAN

2 TYPICAL NORTH DRIVE AND CEMETERY ACCESS RD
1"=6'

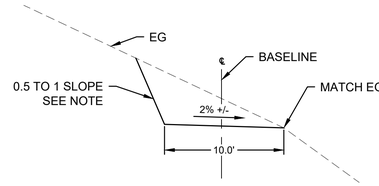

NOTE: 0.5 TO 1 SLOPE UPON APPROVAL BY GEOTECHNICAL ENGINEER

3 TYPICAL SEWER ACCESS ROAD SECTION
1"=6'

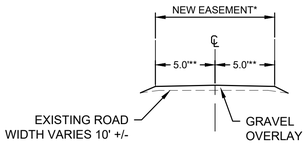

*NEW EASEMENT REQ'D. AT PRIVATE PROPERTY.
**PROVIDE MIN. 10' WIDE GRAVEL OVERLAY

4 TYPICAL CEMETERY RD THROUGH HISTORIC SITE
1"=6'

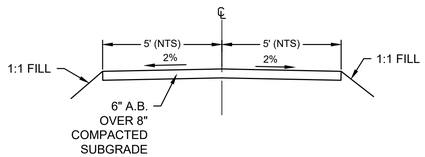

5 TYPICAL LOWER SITE ACCESS ROAD
1"=6'

NO	BY	DATE	REVISIONS	DATE	APP

Item I.

Professional Engineer
CERTIFICATE NO.
49109
KRISHAN GEVINDA GINIGE
10/31/25
DATE SIGNED
ARIZONA, U.S.A.

PREPARED BY:
DESIGNED BY:
DRAWN BY: NMW
CHECKED BY: KG
DATE 10/31/25
SCALE: AS SHOWN
JOB NO. 19-1101CE

TITLE
TYPICAL SECTIONS

JOB
JEROME WWTP
GRADING & UTILITIES PLANS
YAVAPAI COUNTY AZ

PREPARED BY:
SEC Inc.
SOUTHWESTERN ENVIRONMENTAL CONSULTANTS, INC
825 COVE PARKWAY
COTTONWOOD, AZ 86326
928-282-7787

SHEET
C1.2
9 OF 99 SHEETS

JOB NO. 19-1101CE
1685

© SEC, Inc., All Rights Reserved. This document is protected under the United States Copyright Act. No part may be reproduced in any form or by any means or stored in a database or retrieval system, without the prior written permission of SEC, Inc. However, plans/documents could contain unintentional technical inaccuracies, typographical errors or omissions. Users of these plans/documents should understand that it is highly probable that errors and omissions will occur in any plan/document preparation process.

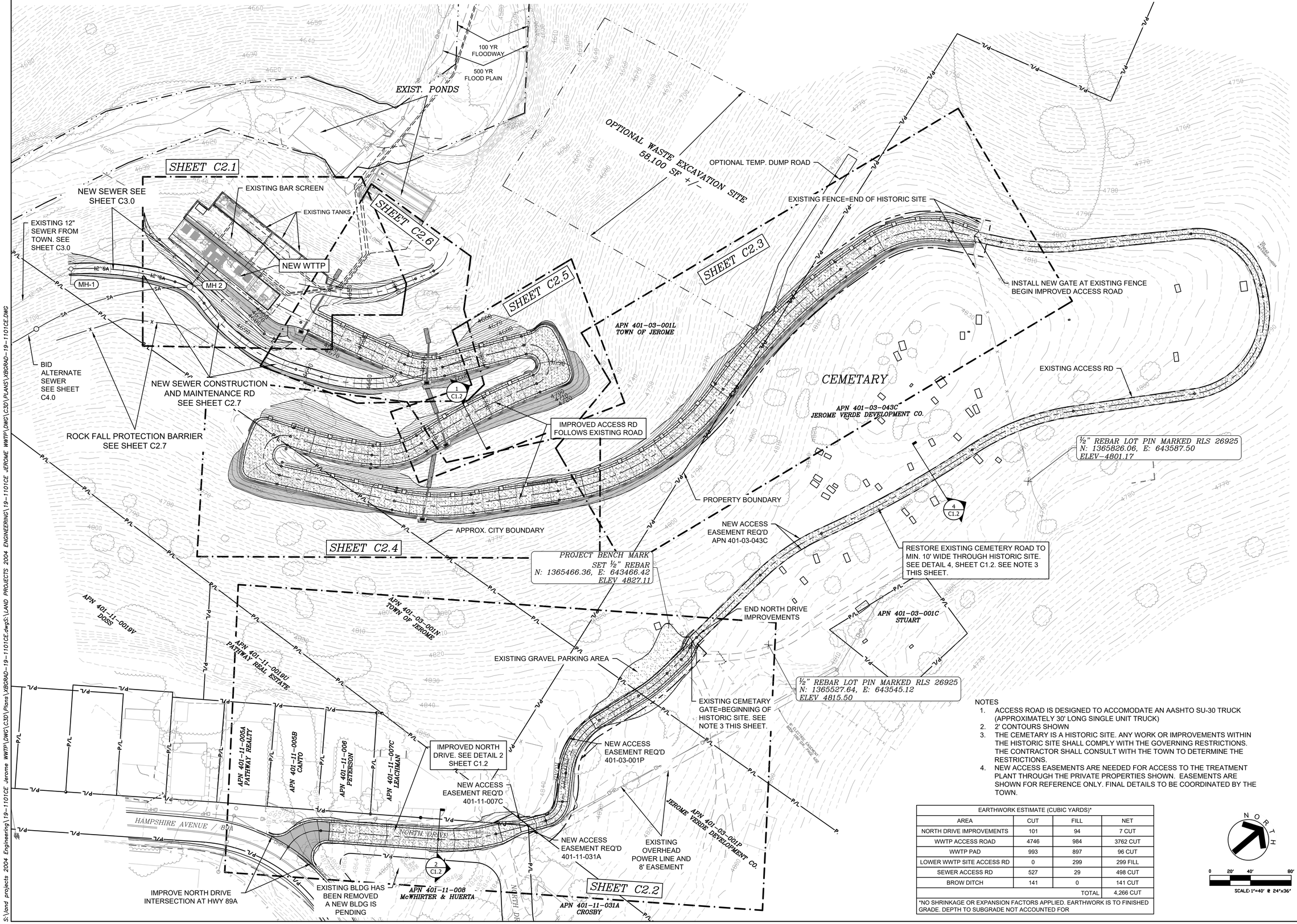

EARTHWORK ESTIMATE (CUBIC YARDS)*			
AREA	CUT	FILL	NET
NORTH DRIVE IMPROVEMENTS	101	94	7 CUT
WWTP ACCESS ROAD	4746	984	3762 CUT
WWTP PAD	993	897	96 CUT
LOWER WWTP SITE ACCESS RD	0	299	299 FILL
SEWER ACCESS RD	527	29	498 CUT
BROW DITCH	141	0	141 CUT
		TOTAL	4,266 CUT
*NO SHRINKAGE OR EXPANSION FACTORS APPLIED. EARTHWORK IS TO FINISHED GRADE. DEPTH TO SUBGRADE NOT ACCOUNTED FOR			

NOTES
1. ACCESS ROAD IS DESIGNED TO ACCOMODATE AN AASHTO SU-30 TRUCK (APPROXIMATELY 30' LONG SINGLE UNIT TRUCK)
2. 2' CONTOURS SHOWN
3. THE CEMETARY IS A HISTORIC SITE. ANY WORK OR IMPROVEMENTS WITHIN THE HISTORIC SITE SHALL COMPLY WITH THE GOVERNING RESTRICTIONS. THE CONTRACTOR SHALL CONSULT WITH THE TOWN TO DETERMINE THE RESTRICTIONS.
4. NEW ACCESS EASEMENTS ARE NEEDED FOR ACCESS TO THE TREATMENT PLANT THROUGH THE PRIVATE PROPERTIES SHOWN. EASEMENTS ARE SHOWN FOR REFERENCE ONLY. FINAL DETAILS TO BE COORDINATED BY THE TOWN.

NO	BY	DATE	REVISIONS	DATE	APP

Professional Engineer
CERTIFICATE NO. 49100
KRISHAN GEVINDA GINIGE
DATE SIGNED 10/31/25
ARIZONA, U.S.A.

PREPARED BY:
DESIGNED BY:
DRAWN BY: NMW
CHECKED BY: KG
SCALE: AS SHOWN
DATE: 10/31/25
JOB NO. 19-1101CE

TITLE: GRADING SITE MAP, SURVEY CONTROL

JOB: JEROME WWTP GRADING & UTILITIES PLANS — YAVAPAI COUNTY AZ

PREPARED BY:
SOUTHWESTERN ENVIRONMENTAL CONSULTANTS, INC
825 COVE PARKWAY
COTTONWOOD, AZ 86326
928-282-7787

SHEET C2.0
10 OF 99 SHEETS

JOB NO. 19-1101CE

1686

These plans/documents have been prepared using technical knowledge that would be applied by other qualified registrants who practice the same profession in the same area and at the same time. Efforts have been made to be as accurate as possible. However, plans/documents could contain unintentional technical inaccuracies, typographical errors or omissions. Users of these plans/documents should understand that it is highly probable that errors and omissions will occur in any plan/document preparation process.

SEC, Inc., All Rights Reserved. This document is protected under the United States Copyright Act. No part may be reproduced in any form or by any means or stored in a database or retrieval system, without the prior written permission of SEC, Inc. These plans/documents have been prepared using technical knowledge that would be applied by other qualified registrants who practice the same profession in the same area and at the same time.

S:\land projects 2004 Engineering\19-1101CE Jerome WWTP\DWG\C3D\Plans\XBGRAD-19-1101CE.dwgS:\LAND PROJECTS 2004 ENGINEERING\19-1101CE JEROME WWTP\DWG\C3D\PLANS\XBGRAD-19-1101CE.DWG

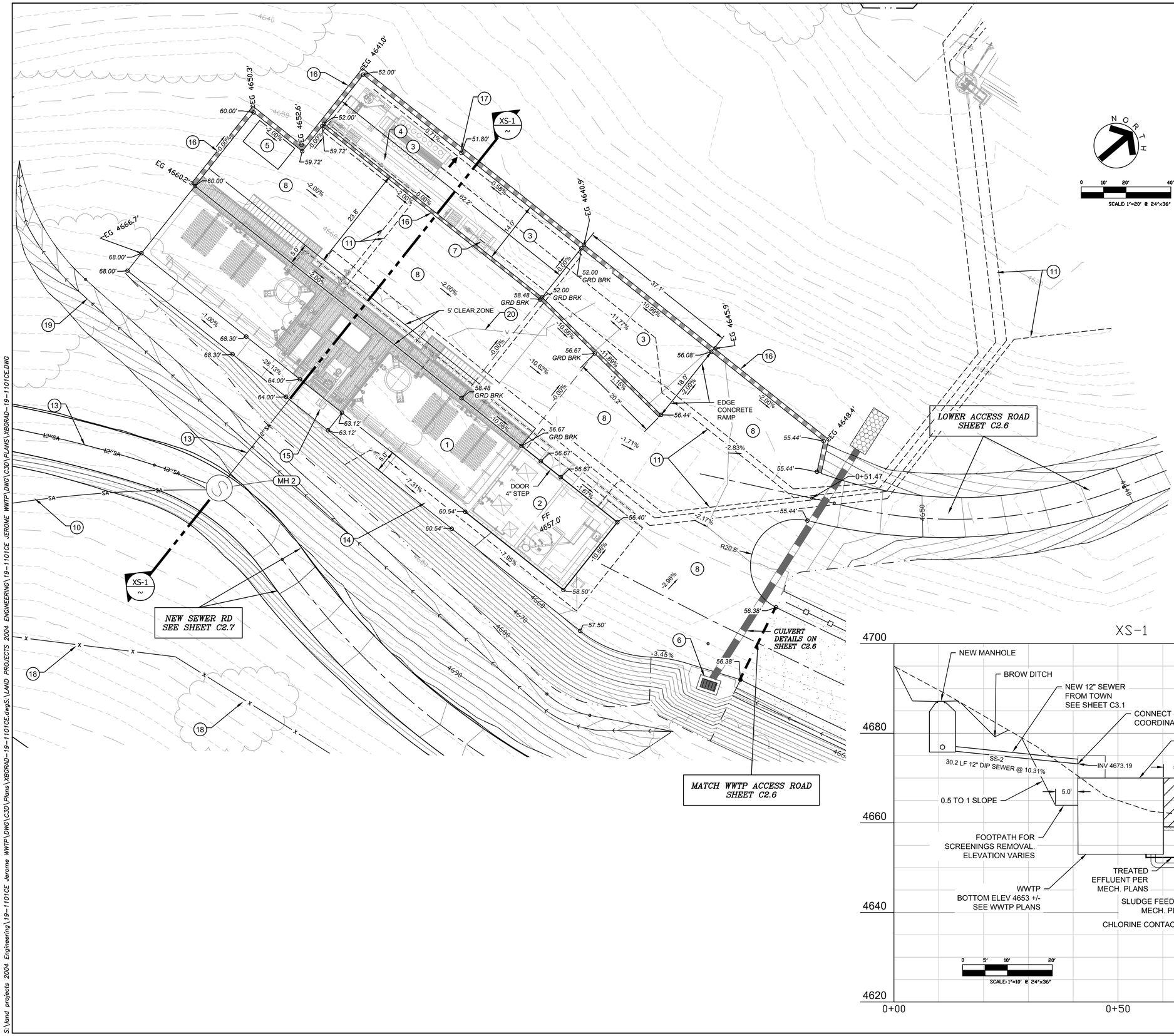

CALLOUTS-WWTP	
1	NEW WASTEWATER TREATMENT PLANT
2	BLOWER / OPERATOR BLDG PER WWTP PLANS
3	CONCRETE DUMPSTER PAD & RAMP FOR DEWATERING PER STRUCTURAL PLANS.
4	CHLORINE CONTACT PER WWTP PLANS
5	EMERGENCY BACKUP GENERATOR PER WWTP PLANS
6	CATCH BASIN & DRAIN PIPE. SEE SHEET C2.6
7	PROVIDE STAIRS & HANDRAILS TO DUMPSTER PAD PER WWTP PLANS
8	TREATEMENT PLANT PAD. 6" AB OVER 8" COMPACTED SUBGRADE.
9	NOT USED.
10	BID ALTERNATE SEWER. SEE SHEET C4.0
11	PIPING PER WWTP PLANS
12	EXISTING 12" SEWER FROM TOWN. SEE SHEET C3.0
13	NEW 12" SEWER FROM TOWN. SEE SHEET C3.0
14	PROVIDE 5' WIDE PATH FOR SCREENINGS REMOVAL HAND CART
15	PLANT SCREENINGS REMOVAL PER WWTP PLANS
16	RETAINING WALL. FG ELEVATIONS PER PLAN. DETAILS PER STRUCTURAL PLANS. PROVIDE SAFETY RAILS FOR PEDESTRIAN FALL PROTECTION. SEE NOTE 4.
17	GRADE DEWATERING PAD TO DRAIN TO WALL OPENING OR SCUPPER. DETAILS TO BE COORDINATED BY STRUCTURAL ENGINEER.
18	BID ALTERNATE: INSTALL BOULDER CATCH FENCE. SEE SHEET C2.7.
19	1.5' DEEP BROW DITCH
20	EXISTING PVC WATER LINE. TO BE REMOVED OR RELOCATED PER TREATMENT PLANT PLANS. SEE NOTE 3.

NOTES
1. RETAINING WALL FINISHED GRADE ELEVATIONS SHOWN. TOP OF WALL AND FOOTING ELEVATIONS PER STRUCTURAL DETAILS. BY OTHERS.
2. 2' CONTOURS SHOWN
3. REFER TO TREATMENT PLANT PLANS, NOTES AND SPECIFICATIONS FOR ADDITIONAL CONSTRUCTION REQUIREMENTS AND DETAILS. BY OTHERS.
4. ALL RETAINING WALLS SHALL HAVE SAFETY RAILS PER MSD 145 OR OTHER SIMILAR MEANS FOR PEDESTRIAN FALL PROTECTION. TO BE COORDINATED BY STRUCTURAL ENGINEER.
5. ALL DITCHES, PONDS, DRAINAGE FLOW PATHS SHALL BE LINED WITH RIP RAP TO A HEIGHT OF MIN DEPTH. RIP RAP NOT SHOWN FOR CLARITY.
6. ALL RIP RAP D50=6" x 12" DEEP w/GEOTEXTILE FABRIC UNDERLAY UNLESS OTHERWISE SPECIFIED.
7. ALL SLOPES STEEPER THAN 2:1 SHALL HAVE EROSION PROTECTION PER GEOTECHNICAL ENGINEER RECOMMENDATIONS.

ESTIMATE OF EARTHWORK QTY'S SHOWN ON SEE SHEET C2.0

NO	BY	DATE	REVISIONS	DATE	APP



PREPARED BY:
DESIGNED BY:
DRAWN BY: NMW
CHECKED BY: KG
SCALE: AS SHOWN
DATE 10/31/25
JOB NO. 19-1101CE

TITLE
WWTP SITE GRADING-10SC

JOB
JEROME WWTP
GRADING & UTILITIES PLANS
YAVAPAI COUNTY AZ

PREPARED BY:
SEC Inc.
SOUTHWESTERN ENVIRONMENTAL CONSULTANTS, INC
825 COVE PARKWAY
COTTONWOOD, AZ 86326
928-282-7787

SEC, Inc., All Rights Reserved. This document is protected under the United States Copyright Act. No part may be reproduced in any form or by any means or stored in a database or retrieval system, without the prior written permission of SEC, Inc. However, plans/documents could contain unintentional technical inaccuracies, typographical errors or omissions. Users of these plans/documents should understand that it is highly probable that errors and omissions will occur in any plan/document preparation process.

SHEET
C2.1
11 OF 99 SHEETS

JOB NO. 19-1101CE
1687

S:\land projects 2004 Engineering\19-1101CE Jerome WWTP\DWG\C3D\Plans\XBGRAD-19-1101CE.dwgS:\LAND PROJECTS 2004 ENGINEERING\19-1101CE JEROME WWTP\DWG\C3D\PLANS\XBGRAD-19-1101CE.DWG

MATCH SHEET C2.0

CALLOUTS-NORTH DRIVE	
1	INSTALL NEW WIDENED ROAD PER DETAIL 2, SHEET C1.2
2	REMOVE EXISTING TREE AS NEEDED TO ACCOMODATE NEW RADIUS AT HWY 89A
3	SAWCUT & REMOVE 2' ASPHALT FOR NEW CONCRETE CONSTRUCTION. REPLACE PER ADOT SPECS.
4	PROVIDE CONCRETE APRON AT CONNECTION TO HWY 89A. 6" CONCRETE OVER 6" AB. PROVIDE SINGLE MAT #4 BARS AT 18" OC BW, CENTERED IN SLAB. PROVIDE EXPANSION & CONTRACTION JOINTS PER ADOT STD DWG C-05.20.
5	MATCH EXISTING DRIVEWAY OR SIDE ROAD

NOTES
1. 2' CONTOURS SHOWN
2. A PERMIT IS REQUIRED FOR ALL WORK WITHIN ADOT RIGHT OF WAY.
3. NEW ACCESS EASEMENTS ARE REQUIRED AT PRIVATE PROPERTIES AS SHOWN IN THESE PLANS. SHOWN FOR REFERENCE ONLY. FINAL DETAILS TO BE COORDINATED BY THE TOWN.

BASELINE EXISTING CEMETERY ROAD
SEE SHEET C2.0

END NORTH DRIVE @ 5+25
BEGIN CEMETERY ROAD @ 15+22.53

EXISTING CEMETERY GATE

END=5+25
PT=5+21.64
4+85
R30.00'
PRC=5+09.33
PC=4+94.75
4+00
R30.00'
PT=4+75.51
R165.00'
PRC=4+39.57

BEGIN EXISTING GRAVEL PARKING AREA,
3+87 +/-

PT=3+54.20
4+00
R70.69'

EXISTING 8' POWER LINE ESMT

NEW ACCESS ESMT REQ'D
APN 401-03-001P

PC=3+30.83

BASELINE NORTH DRIVE

10'
PT=3+02.37
3+00
R22.00'
PRC=2+76.13

TRANSITION LANE WIDTH FROM 9' TO 10'
STA 2+76.13 TO 3+02.37

USE 1:1 SLOPE AND/OR ADD WALL TO FIT NEW EASEMENT. PROVIDE SHOP DWG TO ENGINEER FOR APPROVAL PRIOR TO CONST.

NEW ACCESS EASEMENT REQ'D
APN 401-11-007C
185 SF +/-

0+60.84, 9.00' LT
FG=4868.29

PC=2+45.00
R170.00'

NEW ACCESS EASEMENT REQ'D
APN 401-11-031A
25 SF +/-

APN 401-11-031A
CROSBY

APN 401-03-001P
JEROME VERDE DEVELOPMENT CO.

APN 401-11-0019U
PATHWAY REAL ESTATE

APN 401-03-001N
TOWN OF JEROME

APN 401-11-005A
PATHWAY REALTY

APN 401-11-005B
CANTO

APN 401-11-006
PETERSON

APN 401-11-007C
LEACHMAN

APN 401-11-008
McWHIRTER & HUERTA

0+25.64, 9.00' LT
FG=4874.10

PT=0+52.48
R20.00'
R35.00'
R16.00'

0+14.34, 23.50' LT
FG=4876.52

PC=0+14.97
BEGIN=0+00

0+12.09, 34.29' RT
FG=4873.67

0+60.84, 9.00' RT
FG=4868.29

1+00
2+00
20' R/W
16.0'

TRANSITION LANE WIDTH FROM 18' TO 9'
STA 2+30 TO 2+50

NOTE: THERE IS AN EXISTING WATER UTILITY IN THIS AREA. LOCATION AND DEPTH TBD AT TIME OF CONSTRUCTION

EXISTING BLDG HAS BEEN REMOVED
A NEW BLDG IS PENDING

N O R T H

0 10' 20' 40'
SCALE: 1"=20' @ 24"x36"

Profile View of NORTH DRIVE

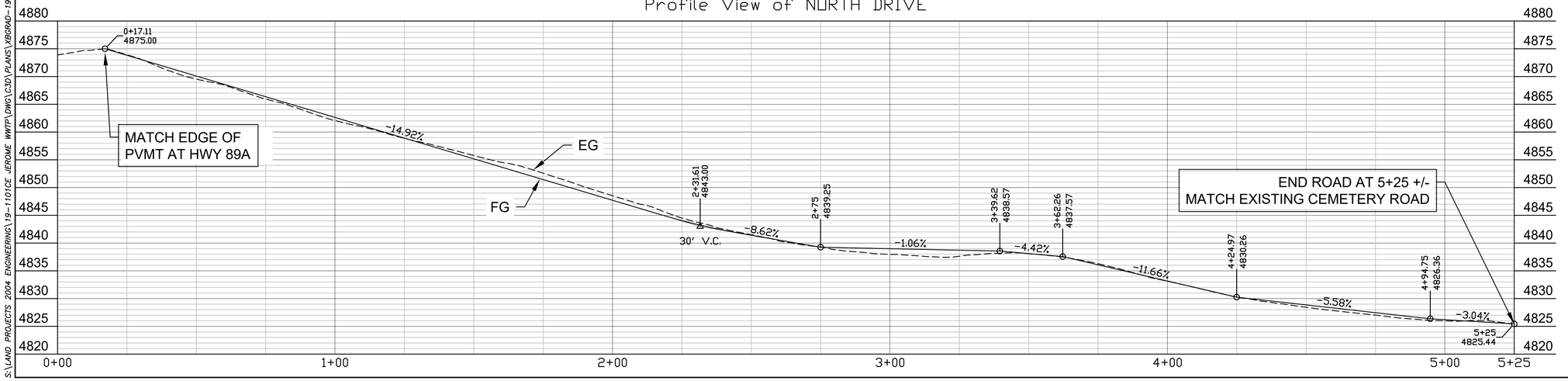

NO	BY	DATE	REVISIONS	DATE	APP

PREPARED BY:
DESIGNED BY:
DRAWN BY: NMW
CHECKED BY: KG
DATE: 10/31/25
JOB NO. 19-1101CE
SCALE: AS SHOWN

TITLE: NORTH DR IMPROVEMENTS

JOB: JEROME WWTP
GRADING & UTILITIES PLANS
YAVAPAI COUNTY AZ

PREPARED BY:
SOUTHWESTERN ENVIRONMENTAL CONSULTANTS, INC
825 COVE PARKWAY
COTTONWOOD, AZ 86326
928-282-7787

SHEET
C2.2
12 OF 99 SHEETS

JOB NO. 19-1101CE
1688

S:\LAND PROJECTS 2004 ENGINEERING\19-1101CE JEROME WWTP\DWG\C3D\PLANS\XBGRAD-19-1101CE.DWG

Plans have been prepared using technical knowledge that would be applied by other qualified registrants who practice the same profession in the same area and at the same time. Efforts have been made to be as accurate as possible. However, plans/documents could contain unintentional technical inaccuracies, typographical errors or omissions. Users of these plans/documents should understand that it is highly probable that errors and omissions will occur in any plan/document preparation process.

© SEC, Inc., All Rights Reserved. This document is protected under the United States Copyright Act. No part may be reproduced in any form or by any means or stored in a database or retrieval system, without the prior written permission of SEC, Inc. These plans/documents have been prepared using technical knowledge that would be applied by other qualified registrants who practice the same profession in the same area and at the same time.

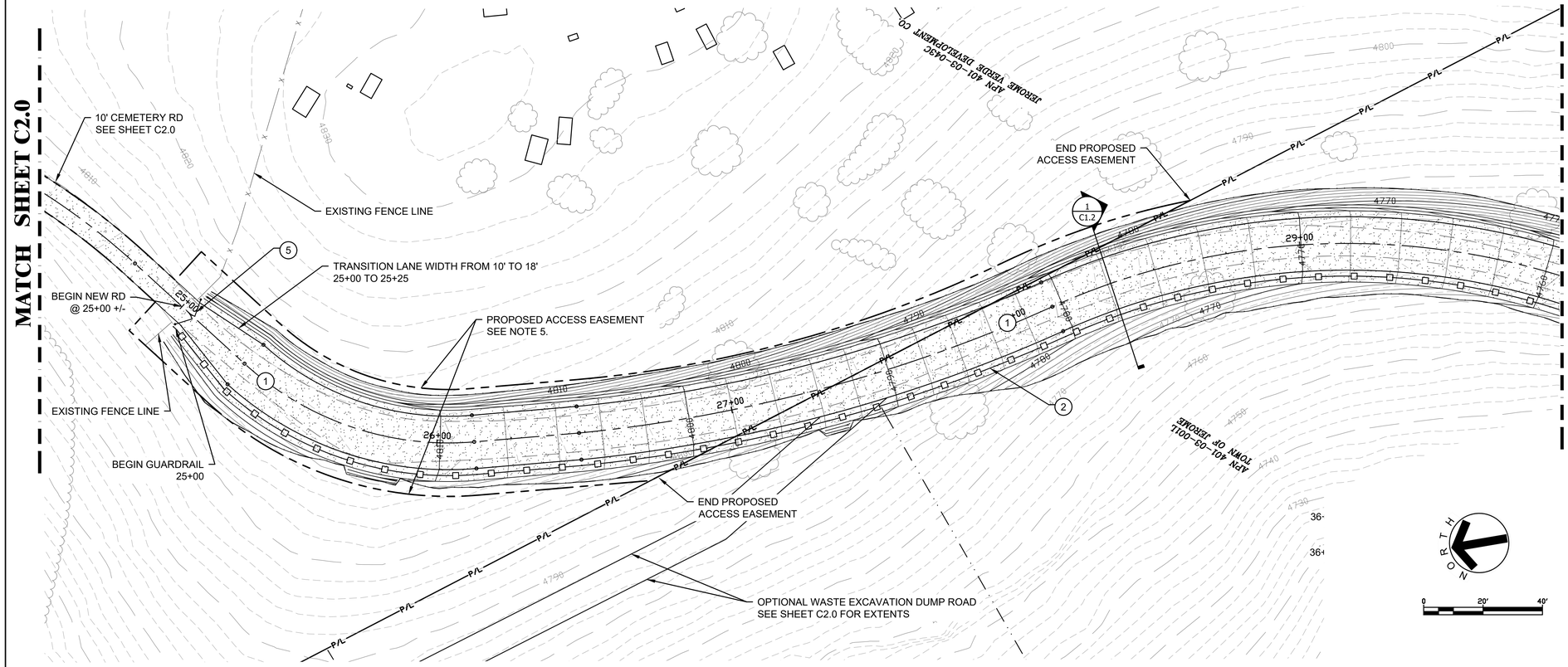

CALLOUTS-WWTP ACCESS RD	
1	INSTALL ACCESS ROAD PER DETAIL 1, SHEET C1.2
2	INSTALL GUARD RAIL PER ADOT STDS OR EQUAL
3	CATCH BASIN PER MSD 537, DOUBLE GRATE & 18" CMP. SEE PROFILE ON THIS SHEET
4	INSTALL 4' WIDE RIP RAP AT DRAIN PIPE OUTLET. SEE NOTE 2.
5	INSTALL 12' WIDE CHAIN LINK SWING GATE AT EXISTING FENCE LINE PER MSD 160 OR AS DIRECTED BY THE TOWN.

NOTES

1. THE CEMETARY IS A HISTORICAL SITE. ANY IMPROVEMENTS SHALL COMPLY WITH THE RESTRICTIONS FOR THE SITE. CONTRACTOR SHALL CONSULT WITH THE TOWN FOR DETAILS.
2. ALL RIP RAP SHALL BE D50=6" x 12" DEEP w/GEOTEXTILE FABRIC UNDERLAY UNLESS OTHERWISE INDICATED.
3. ALL SLOPES STEEPER THAN 2:1 SHALL HAVE EROSION PROTECTION PER GEOTECHNICAL ENGINEER RECOMMENDATIONS.
4. LINE ALL PONDS, DITCHES, DRAINAGE FLOW PATHS WITH RIP RAP TO HEIGHT=MIN. DEPTH. RIP RAP NOT SHOWN FOR CLARITY.
5. PROPOSED ACCESS EASEMENTS ARE REQUIRED THROUGH THE PRIVATE PROPERTIES SHOWN IN THESE PLANS. SHOWN FOR REFERENCE ONLY. FINAL DETAILS TO BE COORDINATED BY THE TOWN.

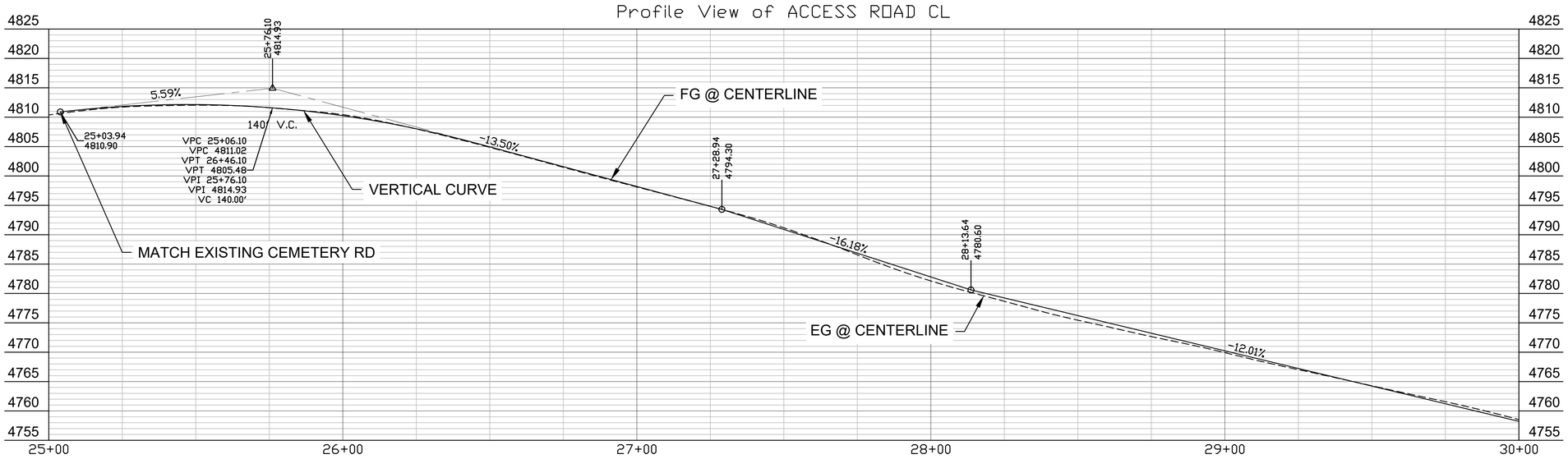

NO | BY | DATE | REVISIONS | DATE | APP

Professional Engineer
CERTIFICATE NO.
49106
KRISHAN GEVINDA GINIGE
10/31/25
DATE SIGNED
ARIZONA, U.S.A.

PREPARED BY:
DESIGNED BY:
DRAWN BY: NMW
CHECKED BY: KG
SCALE: AS SHOWN
DATE 10/31/25
JOB NO. 19-1101CE

TITLE
WWTP ACCESS RD P&P 25+00+TO 30+00

JOB
JEROME WWTP
GRADING & UTILITIES PLANS
YAVAPAI COUNTY AZ

PREPARED BY:
SOUTHWESTERN ENVIRONMENTAL CONSULTANTS, INC
825 COVE PARKWAY
COTTONWOOD, AZ 86326
928-282-7787

SHEET
C2.3
13 OF 99 SHEETS

JOB NO. 19-1101CE
1689

SEC, Inc., All Rights Reserved. This document is protected under the United States Copyright Act. No part may be reproduced in any form or by any means or stored in a database or retrieval system, without the prior written permission of SEC, Inc. These plans/documents have been prepared using technical knowledge that would be applied by other qualified registrants who practice the same profession in the same area and at the same time. Efforts have been made to be as accurate as possible. However, plans/documents could contain unintentional technical inaccuracies, typographical errors or omissions. Users of these plans/documents should understand that it is highly probable that errors and omissions will occur in any plan/document preparation process.

S:\LAND PROJECTS 2004 ENGINEERING\19-1101CE JEROME WWTP\DWG\C3D\PLANS\XBGRAD-19-1101CE.DWG

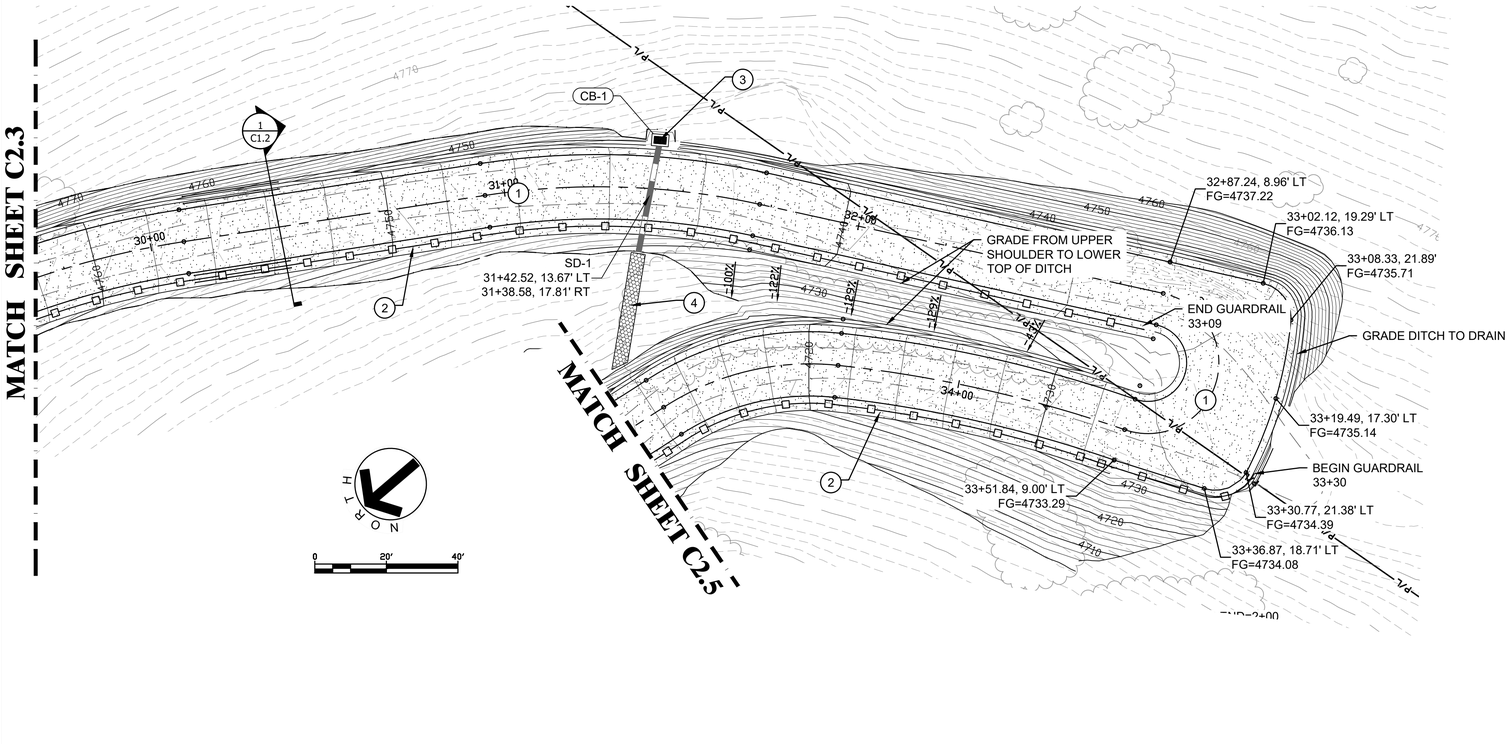

CALLOUTS-WWTP ACCESS RD	
1	INSTALL ACCESS ROAD PER DETAIL 1, SHEET C1.2
2	INSTALL GUARD RAIL PER ADOT STDS OR EQUAL
3	CATCH BASIN PER MSD 537, DOUBLE GRATE & 18" CMP. SEE PROFILE ON THIS SHEET
4	INSTALL 4' WIDE RIP RAP AT DRAIN PIPE OUTLET. SEE NOTE 2.
5	INSTALL 12' WIDE CHAIN LINK SWING GATE AT EXISTING FENCE LINE PER MSD 160 OR AS DIRECTED BY THE TOWN.

NOTES
1. THE CEMETARY IS A HISTORICAL SITE. ANY IMPROVEMENTS SHALL COMPLY WITH THE RESTRICTIONS FOR THE SITE. CONTRACTOR SHALL CONSULT WITH THE TOWN FOR DETAILS.
2. ALL RIP RAP SHALL BE D50=6" x 12" DEEP w/GEOTEXTILE FABRIC UNDERLAY UNLESS OTHERWISE INDICATED.
3. ALL SLOPES STEEPER THAN 2:1 SHALL HAVE EROSION PROTECTION PER GEOTECHNICAL ENGINEER RECOMMENDATIONS.
4. LINE ALL PONDS, DITCHES, DRAINAGE FLOW PATHS WITH RIP RAP TO HEIGHT=MIN. DEPTH. RIP RAP NOT SHOWN FOR CLARITY.
5. PROPOSED ACCESS EASEMENTS ARE REQUIRED THROUGH THE PRIVATE PROPERTIES SHOWN IN THESE PLANS. SHOWN FOR REFERENCE ONLY. FINAL DETAILS TO BE COORDINATED BY THE TOWN.

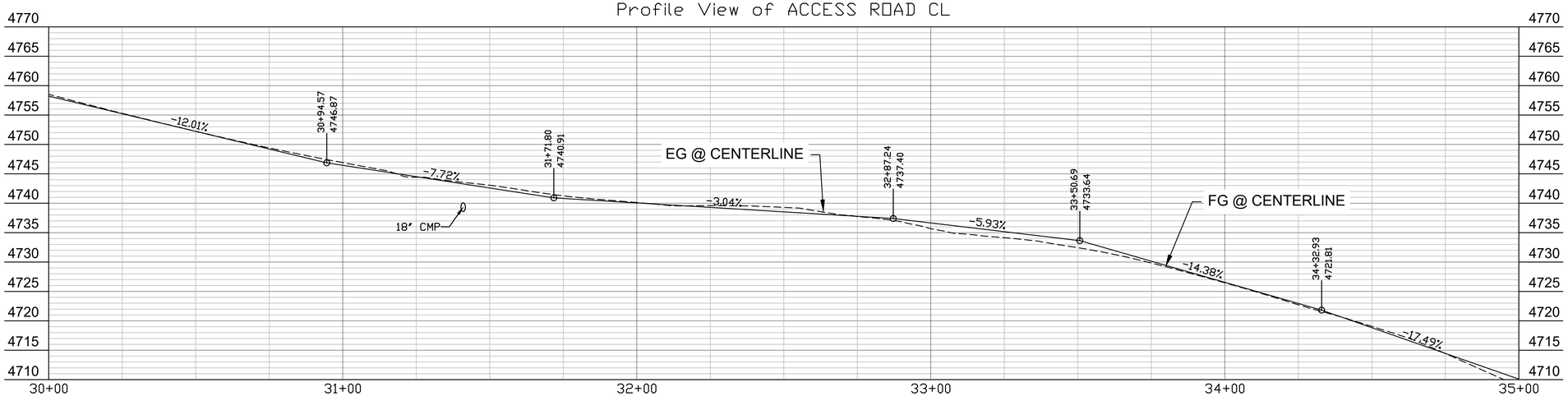

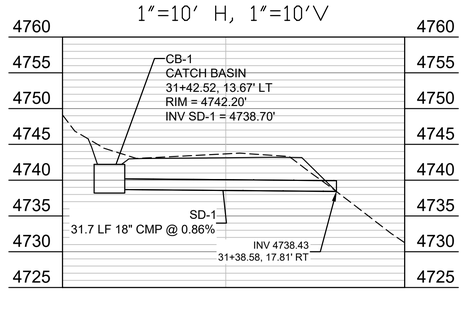

NO	BY	DATE	REVISIONS	DATE	APP



PREPARED BY:
DESIGNED BY:
DRAWN BY: NMW
CHECKED BY: KG
SCALE: AS SHOWN
DATE 10/31/25
JOB NO. 19-1101CE

TITLE
WWTP ACCESS RD P&P 30+00 TO 35+00

JOB
JEROME WWTP
GRADING & UTILITIES PLANS
YAVAPAI COUNTY AZ

PREPARED BY:
SOUTHWESTERN ENVIRONMENTAL CONSULTANTS, INC
825 COVE PARKWAY
COTTONWOOD, AZ 86326
928-282-7787

SHEET
C2.4
14 OF 99 SHEETS

JOB NO. 19-1101CE
1690

© SEC, Inc., All Rights Reserved. This document is protected under the United States Copyright Act. No part may be reproduced in any form or by any means or stored in a database or retrieval system, without the prior written permission of SEC, Inc. These plans/documents have been prepared using technical knowledge that would be applied by other qualified registrants who practice the same profession in the same area and at the same time. Efforts have been made to be as accurate as possible. However, plans/documents could contain unintentional technical inaccuracies, typographical errors or omissions. Users of these plans/documents should understand that it is highly probable that errors and omissions will occur in any plan/document preparation process.

S:\LAND PROJECTS 2004 ENGINEERING\19-1101CE JEROME WWTP\DWG\C3D\PLANS\XBGRAD-19-1101CE.DWG

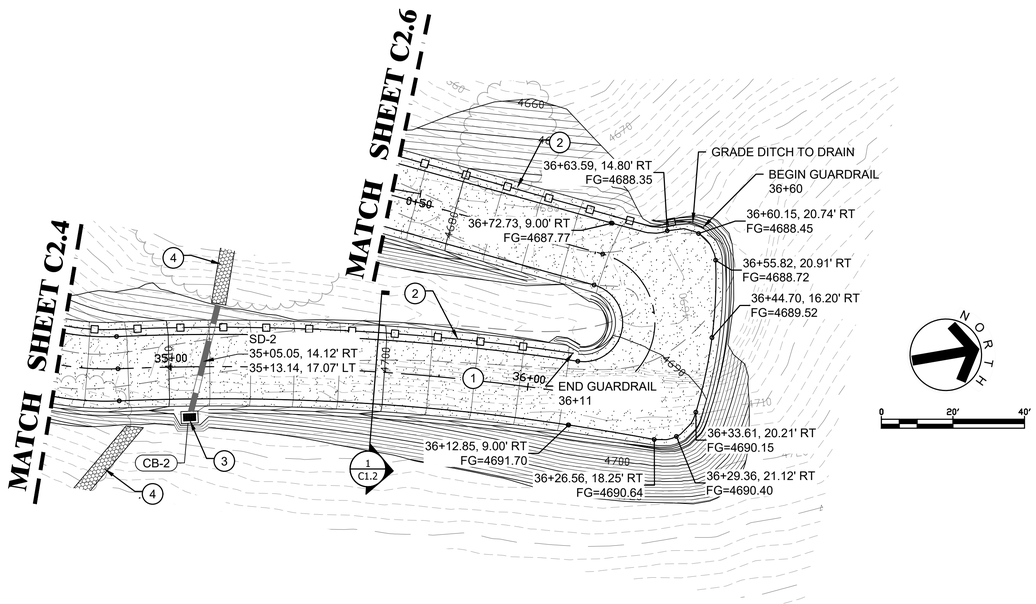

CALLOUTS-WWTP ACCESS RD	
1	INSTALL ACCESS ROAD PER DETAIL 1, SHEET C1.2
2	INSTALL GUARD RAIL PER ADOT STDS OR EQUAL
3	CATCH BASIN PER MSD 537, DOUBLE GRATE & 18" CMP. SEE PROFILE ON THIS SHEET
4	INSTALL 4' WIDE RIP RAP AT DRAIN PIPE OUTLET. SEE NOTE 2.
5	INSTALL 12' WIDE CHAIN LINK SWING GATE AT EXISTING FENCE LINE PER MSD 160 OR AS DIRECTED BY THE TOWN.

NOTES
1. THE CEMETARY IS A HISTORICAL SITE. ANY IMPROVEMENTS SHALL COMPLY WITH THE RESTRICTIONS FOR THE SITE. CONTRACTOR SHALL CONSULT WITH THE TOWN FOR DETAILS.
2. ALL RIP RAP SHALL BE D50=6" x 12" DEEP w/GEOTEXTILE FABRIC UNDERLAY UNLESS OTHERWISE INDICATED.
3. ALL SLOPES STEEPER THAN 2:1 SHALL HAVE EROSION PROTECTION PER GEOTECHNICAL ENGINEER RECOMMENDATIONS.
4. LINE ALL PONDS, DITCHES, DRAINAGE FLOW PATHS WITH RIP RAP TO HEIGHT=MIN. DEPTH. RIP RAP NOT SHOWN FOR CLARITY.
5. PROPOSED ACCESS EASEMENTS ARE REQUIRED THROUGH THE PRIVATE PROPERTIES SHOWN IN THESE PLANS. SHOWN FOR REFERENCE ONLY. FINAL DETAILS TO BE COORDINATED BY THE TOWN.

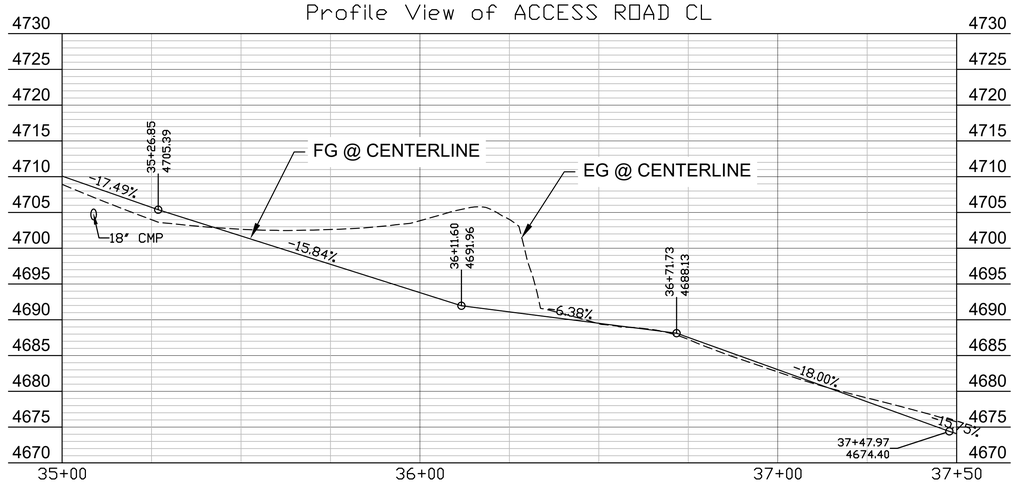

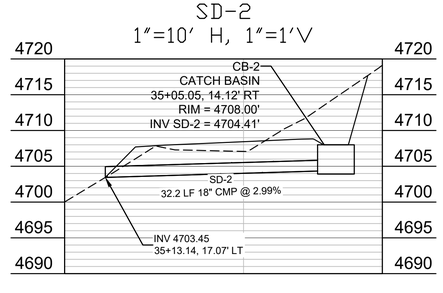

NO	BY	DATE	REVISIONS	DATE	APP

Item I.

49108
KRISHAN GEVINDA GINIGE
10/31/25
REGISTERED PROFESSIONAL ENGINEER
ARIZONA, U.S.A.

PREPARED BY:
DESIGNED BY:
DRAWN BY: NMW
CHECKED BY: KG
SCALE: AS SHOWN
DATE 10/31/25
JOB NO. 19-1101CE

TITLE
WWTP ACCESS RD P&P 35+00 TO 37+50

JOB
JEROME WWTP
GRADING & UTILITIES PLANS
YAVAPAI COUNTY AZ

PREPARED BY:
SOUTHWESTERN ENVIRONMENTAL CONSULTANTS, INC
825 COVE PARKWAY
COTTONWOOD, AZ 86326
928-282-7787

SHEET
C2.5
15 OF 99 SHEETS

JOB NO. 19-1101CE
1691

© SEC, Inc., All Rights Reserved. This document is protected under the United States Copyright Act. No part may be reproduced in any form or by any means or stored in a database or retrieval system, without the prior written permission of SEC, Inc. These plans/documents have been prepared using technical knowledge that would be applied by other qualified registrants who practice the same profession in the same area and at the same time. Efforts have been made to be as accurate as possible. However, plans/documents could contain unintentional technical inaccuracies, typographical errors or omissions. Users of these plans/documents should understand that it is highly probable that errors and omissions will occur in any plan/document preparation process.

S:\LAND PROJECTS 2004 ENGINEERING\19-1101CE JEROME WWTP\DWG\C3D\PLANS\XBGRAD-19-1101CE.DWG

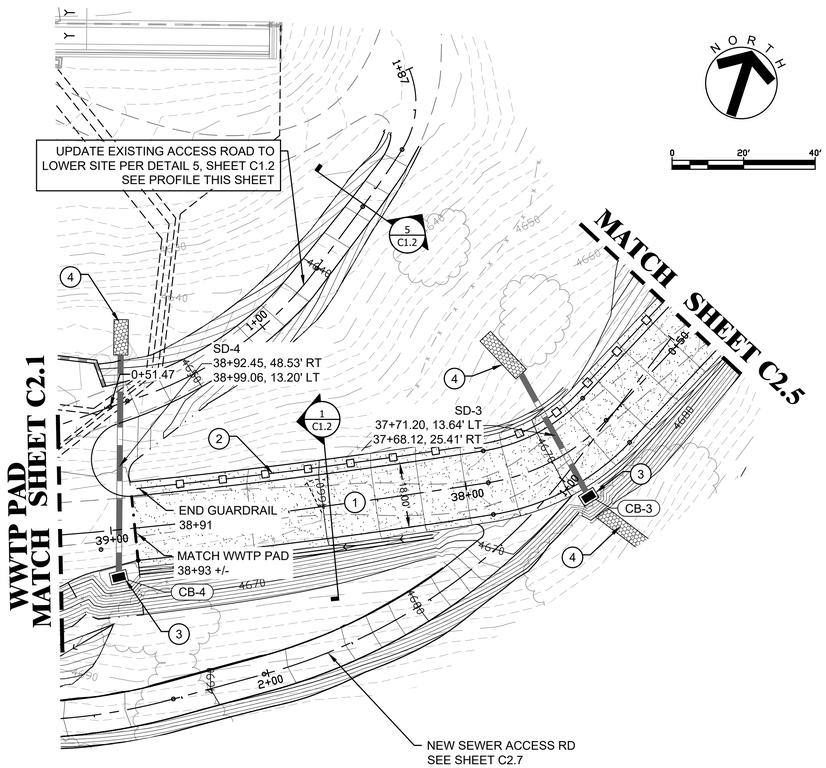

CALLOUTS-WWTP ACCESS RD	
1	INSTALL ACCESS ROAD PER DETAIL 1, SHEET C1.2
2	INSTALL GUARD RAIL PER ADOT STDS OR EQUAL
3	CATCH BASIN PER MSD 537, DOUBLE GRATE & 18" CMP. SEE PROFILE ON THIS SHEET
4	INSTALL 4' WIDE RIP RAP AT DRAIN PIPE OUTLET. SEE NOTE 2.
5	INSTALL 12' WIDE CHAIN LINK SWING GATE AT EXISTING FENCE LINE PER MSD 160 OR AS DIRECTED BY THE TOWN.

NOTES
1. THE CEMETARY IS A HISTORICAL SITE. ANY IMPROVEMENTS SHALL COMPLY WITH THE RESTRICTIONS FOR THE SITE. CONTRACTOR SHALL CONSULT WITH THE TOWN FOR DETAILS.
2. ALL RIP RAP SHALL BE D50=6" x 12" DEEP w/GEOTEXTILE FABRIC UNDERLAY UNLESS OTHERWISE INDICATED.
3. ALL SLOPES STEEPER THAN 2:1 SHALL HAVE EROSION PROTECTION PER GEOTECHNICAL ENGINEER RECOMMENDATIONS.
4. LINE ALL PONDS, DITCHES, DRAINAGE FLOW PATHS WITH RIP RAP TO HEIGHT=MIN. DEPTH. RIP RAP NOT SHOWN FOR CLARITY.
5. PROPOSED ACCESS EASEMENTS ARE REQUIRED THROUGH THE PRIVATE PROPERTIES SHOWN IN THESE PLANS. SHOWN FOR REFERENCE ONLY. FINAL DETAILS TO BE COORDINATED BY THE TOWN.

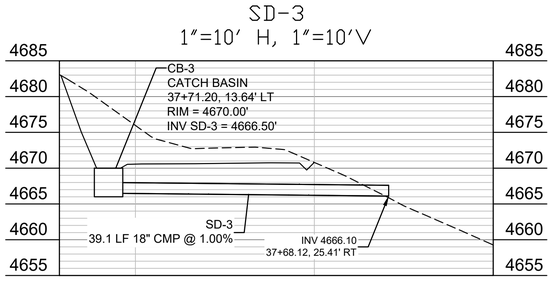

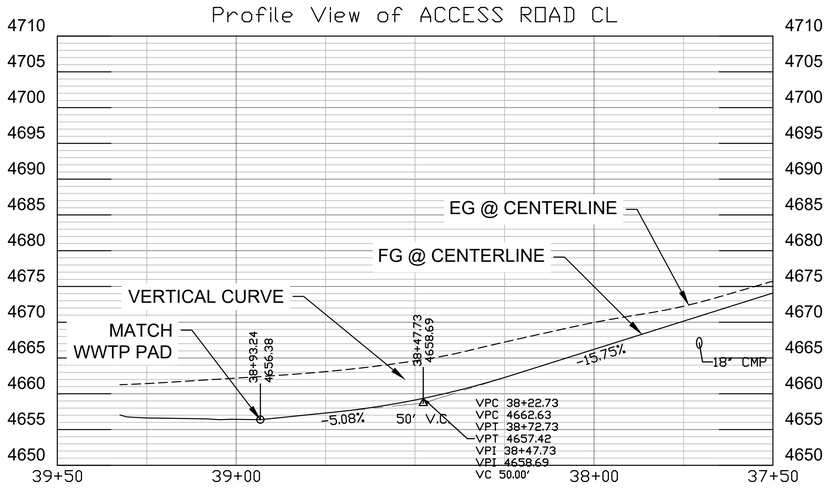

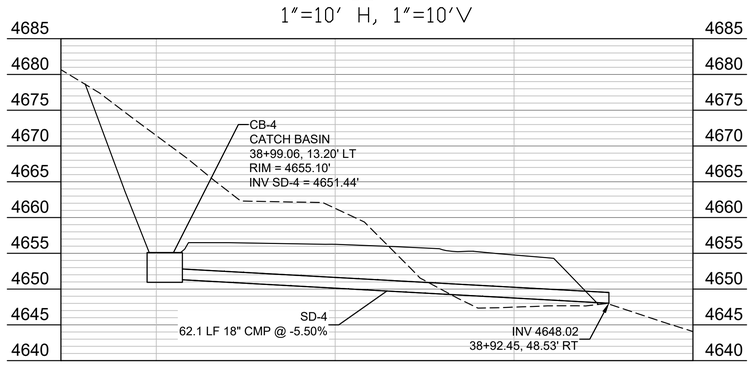

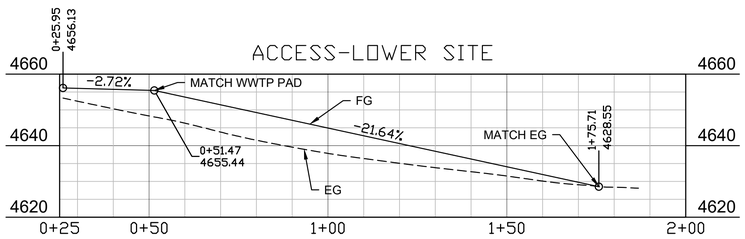

S:\LAND PROJECTS 2004 ENGINEERING\19-1101CE JEROME WWTP\DWG\C3D\PLANS\XBGRAD-19-1101CE.DWG

Item I.

NO	BY	DATE	REVISIONS	DATE	APP

Professional Engineer
CERTIFICATE NO.
49106
KRISHAN GEVINDA GINIGE
10/31/25
DATE SIGNED
ARIZONA, U.S.A.

PREPARED BY:
DESIGNED BY:
DRAWN BY: NMW
CHECKED BY: KG
SCALE: AS SHOWN
DATE 10/31/25
JOB NO. 19-1101CE

TITLE
RD P&P 37+50 TO
WWTP ACCESS RD P&P
39+75

JOB
JEROME WWTP
GRADING & UTILITIES PLANS
YAVAPAI COUNTY AZ

PREPARED BY:
SEC Inc.
SOUTHWESTERN ENVIRONMENTAL CONSULTANTS, INC
825 COVE PARKWAY
COTTONWOOD, AZ 86326
928-282-7787

SHEET
C2.6
16 OF 99 SHEETS

JOB NO. 19-1101CE
1692

© SEC, Inc., All Rights Reserved. This document is protected under the United States Copyright Act. No part may be reproduced in any form or by any means or stored in a database or retrieval system, without the prior written permission of SEC, Inc. These plans/documents have been prepared using technical knowledge that would be applied by other qualified registrants who practice the same profession in the same area and at the same time. Efforts have been made to be as accurate as possible. However, plans/documents could contain unintentional technical inaccuracies, typographical errors or omissions. Users of these plans/documents should understand that it is highly probable that errors and omissions will occur in any plan/document preparation process.

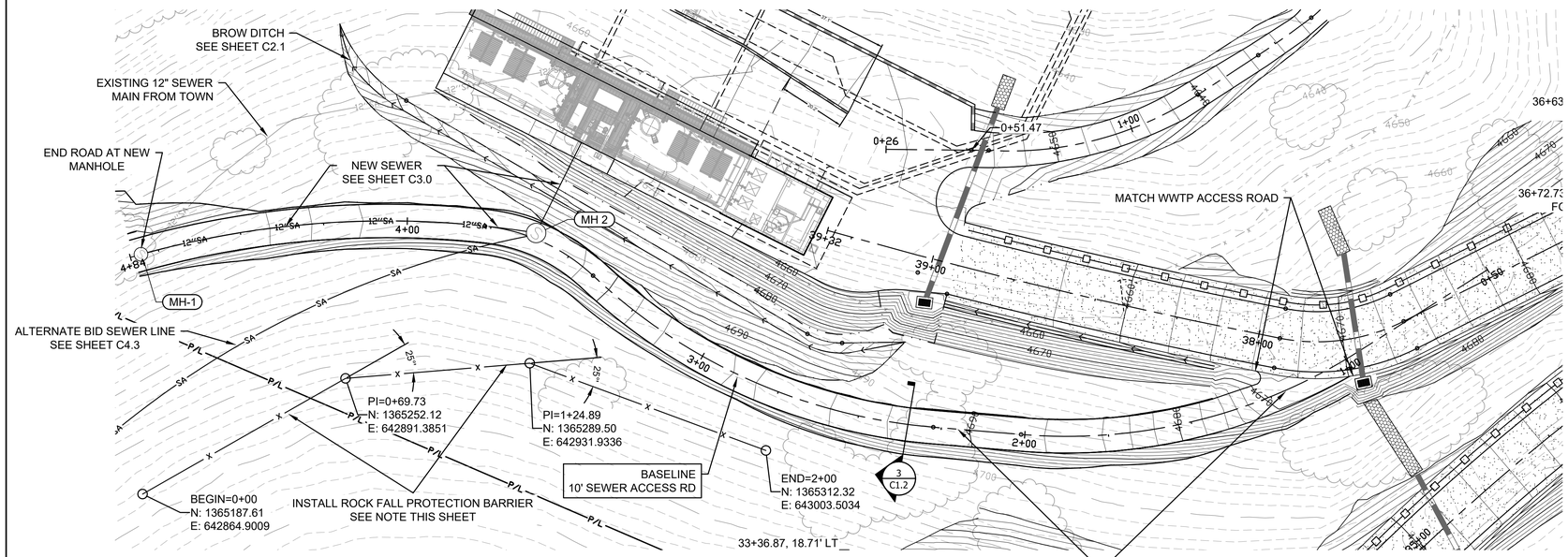

ROCK FALL PROTECTION BARRIER
PROVIDE ROCK FALL PROTECTION BARRIER. ALTERNATE BID ITEM. SEE PLAN SPECIFICATIONS FOR DETAILS.

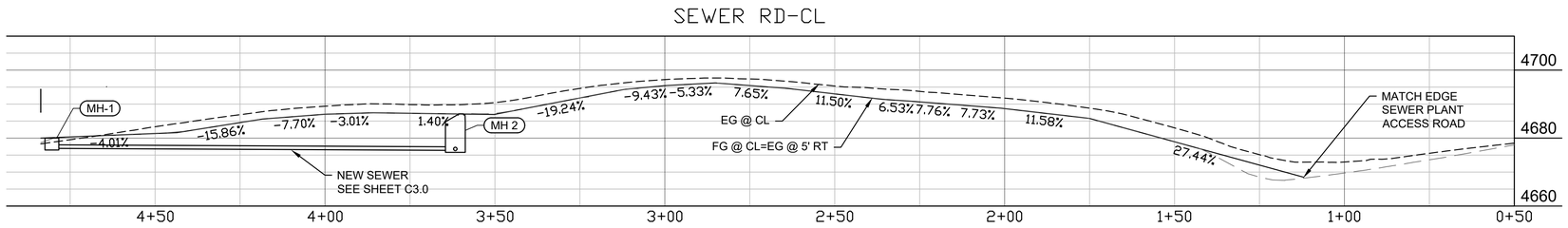

NO	BY	DATE	REVISIONS	DATE	APP

Professional Engineer
CERTIFICATE NO.
49106
KRISHAN GEVINDA GINIGE
10/31/25
DATE SIGNED
ARIZONA, U.S.A.

PREPARED BY:
DESIGNED BY:
DRAWN BY: NMW
CHECKED BY: KG
SCALE: AS SHOWN
DATE 10/31/25
JOB NO. 19-1101CE

TITLE
NEW SEWER ACCESS ROAD

JOB
JEROME WWTP
GRADING & UTILITIES PLANS
YAVAPAI COUNTY AZ

PREPARED BY:
SEC Inc.
SOUTHWESTERN ENVIRONMENTAL CONSULTANTS, INC
825 COVE PARKWAY
COTTONWOOD, AZ 86326
928-282-7787

SHEET
C2.7
17 OF 99 SHEETS

JOB NO. 19-1101CE
1693

SEC, Inc. All Rights Reserved. This document is protected under the United States Copyright Act. No part may be reproduced in any form or by any means or stored in a database or retrieval system, without the prior written permission of SEC, Inc. These plans/documents have been prepared using technical knowledge that would be applied by other qualified registrants who practice the same profession in the same area and at the same time. Efforts have been made to be as accurate as possible. However, plans/documents could contain unintentional technical inaccuracies, typographical errors or omissions. Users of these plans/documents should understand that it is highly probable that errors and omissions will occur in any plan/document preparation process.

S:\LAND PROJECTS 2004 ENGINEERING\19-1101CE JEROME WWTP\DWG\C3D\PLANS\XBGRAD-19-1101CE.DWG

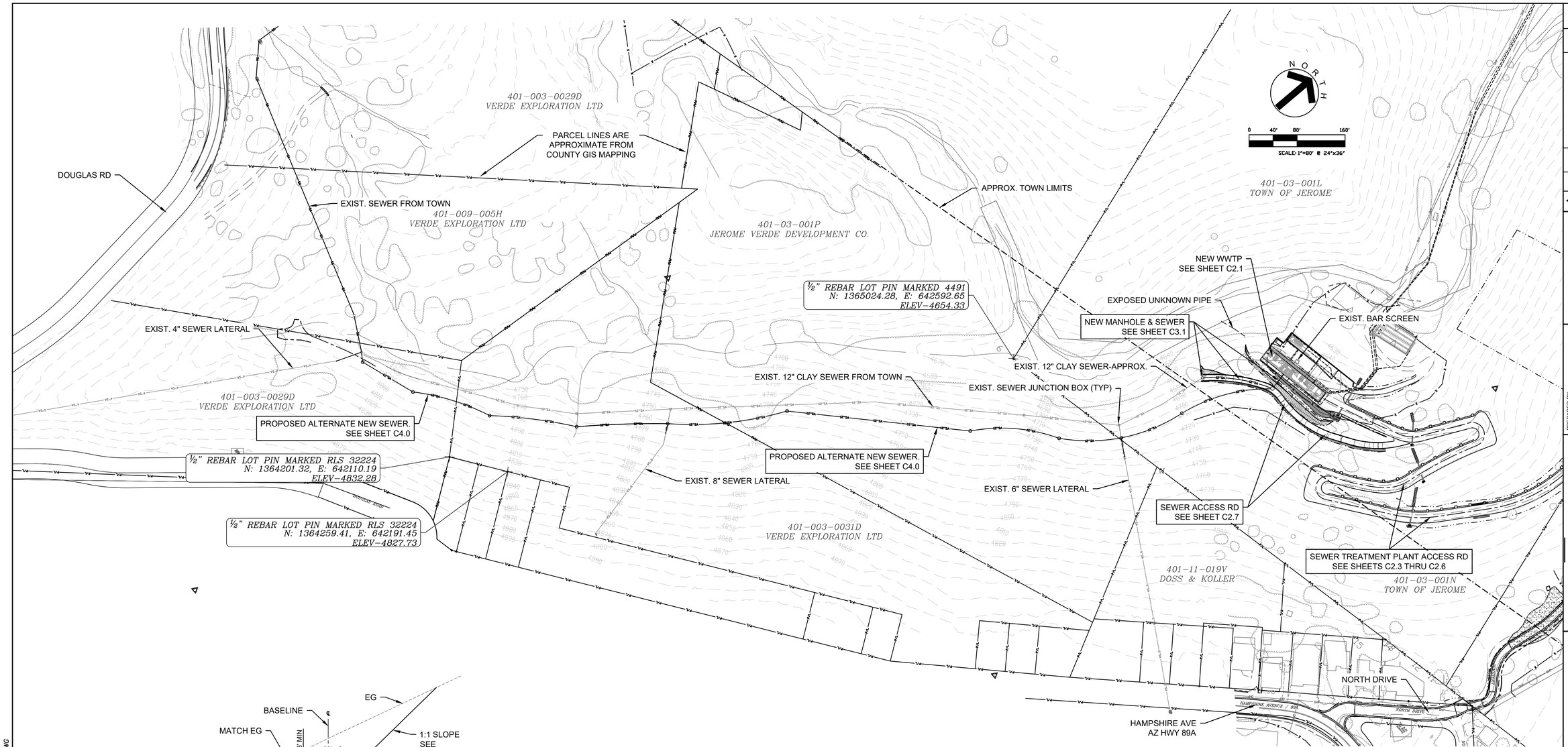

1 TYPICAL SEWER ROAD SECTION

1"=6'

CONSTRUCTION NOTES

1. THE EXISTING SEWER PIPES ARE VERY SHALLOW. EXTREME CAUTION IS REQUIRED TO ENSURE THE PIPES ARE PROTECTED DURING CONSTRUCTION. EXISTING SEWER TO REMAIN OPERATIONAL AT ALL TIMES UNTIL THE NEW SEWER IS ACTIVATED.
2. ALL TEMPORARY AND NEW SEWER PIPES AND STRUCTURES SHALL BE INSTALLED PER THE SPECIFICATIONS PROVIDED BY THE SEWER PLANT ENGINEER.

STRUCTURES					
STRUCTURE	DESC	RIM	INVERT	DEPTH (FT)	LOCATION
MH-1	MANHOLE-48"	4680.000'	OUT = 4677.00'	3.00	N: 1365243.77 E: 642820.46
MH 2	MANHOLE-60"	4687.137'	IN = 4676.40' OUT = 4676.30'	10.83	N: 1365321.33 E: 642909.50

PIPES			
PIPE	SIZE & TYPE	LENGTH	SLOPE
SS-1	12" FPVC	119.01'	0.50%
SS-2	12" DIP SEWER	30.20'	10.31%

ESTIMATE OF SEWER QTY'S		
ITEM	QTY	UNITS
12" PVC PIPE	100	LF
12" DIP	42	LF
48" MANHOLE	1	EA
60" DROP MANHOLE	1	EA

NO	BY	DATE	REVISIONS	DATE	APP.

Registered Professional Engineer (Civil)
CERTIFICATE NO.
49108
KRISHAN GEVINDA GINIGE
10/31/25
DATE SIGNED
ARIZONA, U.S.A.

PREPARED BY:
DESIGNED BY:
DRAWN BY: NMW
CHECKED BY: KG
DATE: 10/31/25
SCALE: AS SHOWN
JOB NO. 19-1101CE

TITLE: NEW SEWER SITE MAP, SURVEY CONTROL

JOB: JEROME WWTP
GRADING & UTILITIES PLANS
YAVAPAI COUNTY AZ

PREPARED BY:
SOUTHWESTERN ENVIRONMENTAL CONSULTANTS, INC
825 COVE PARKWAY
COTTONWOOD, AZ 86326
928-282-7787

SHEET
C3.0
18 OF 99 SHEETS

JOB NO. 19-1101CE
1694

SEC, Inc., All Rights Reserved. This document is protected under the United States Copyright Act. No part may be reproduced in any form or by any means or stored in a database or retrieval system, without the prior written permission of SEC, Inc. These plans/documents have been prepared using technical knowledge that would be applied by other qualified registrants who practice this same profession in the same area and at the same time. Efforts have been made to be as accurate as possible. However, plans/documents could contain unintentional technical inaccuracies, typographical errors or omissions. Users of these plans/documents should understand that it is highly probable that errors and omissions will occur in any plan/document preparation process.

S:\LAND PROJECTS 2004 ENGINEERING\19-1101CE JEROME WWTP\DWG\C3D\PLANS\XBSAN-19-1101CE.DWG

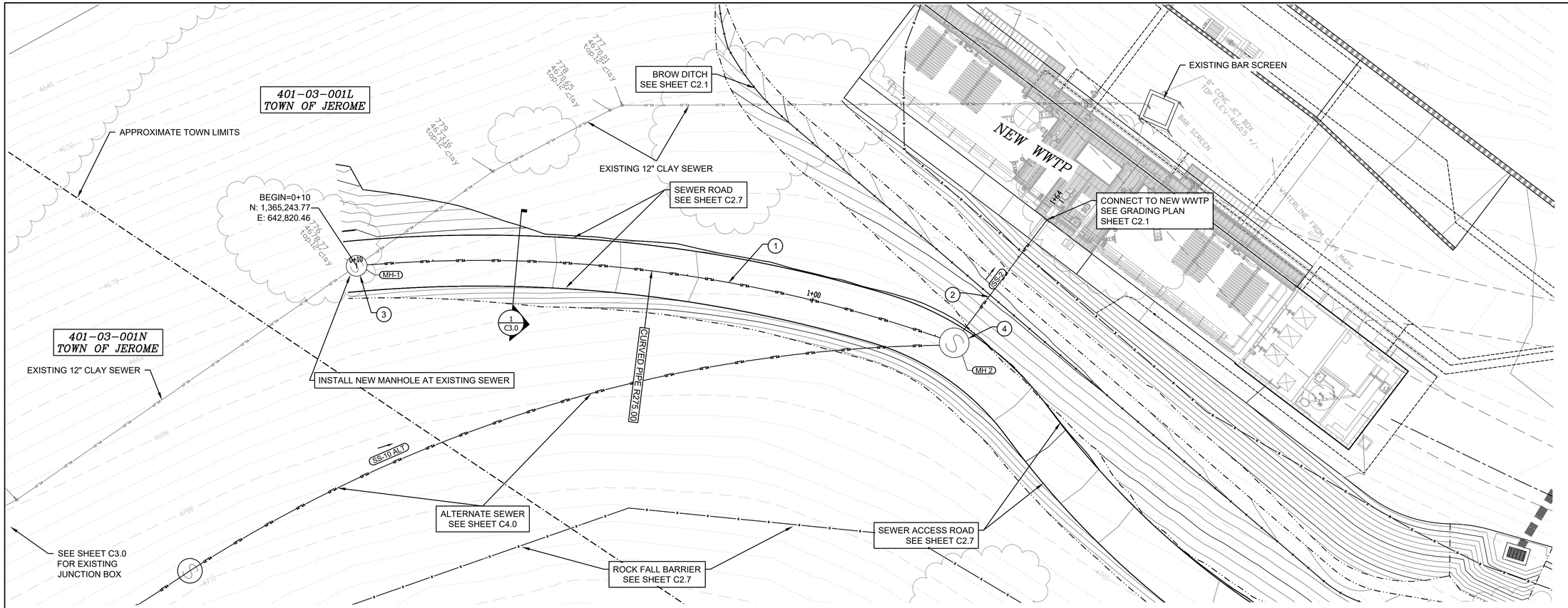

SEWER CALLOUTS. SEE CONSTRUCTION NOTES ON SHEET C3.0	
1	INSTALL 12" FPVC SEWER PIPE. CURVE PIPE @ 275' MIN. RADIUS. SEE NOTE 2, SHEET C3.0
2	INSTALL 12" DIP SEWER LINE
3	INSTALL 48" FLAT TOP SEWER MANHOLE PER MSD 420-1
4	INSTALL 60" SEWER MANHOLE PER MSD 420-1

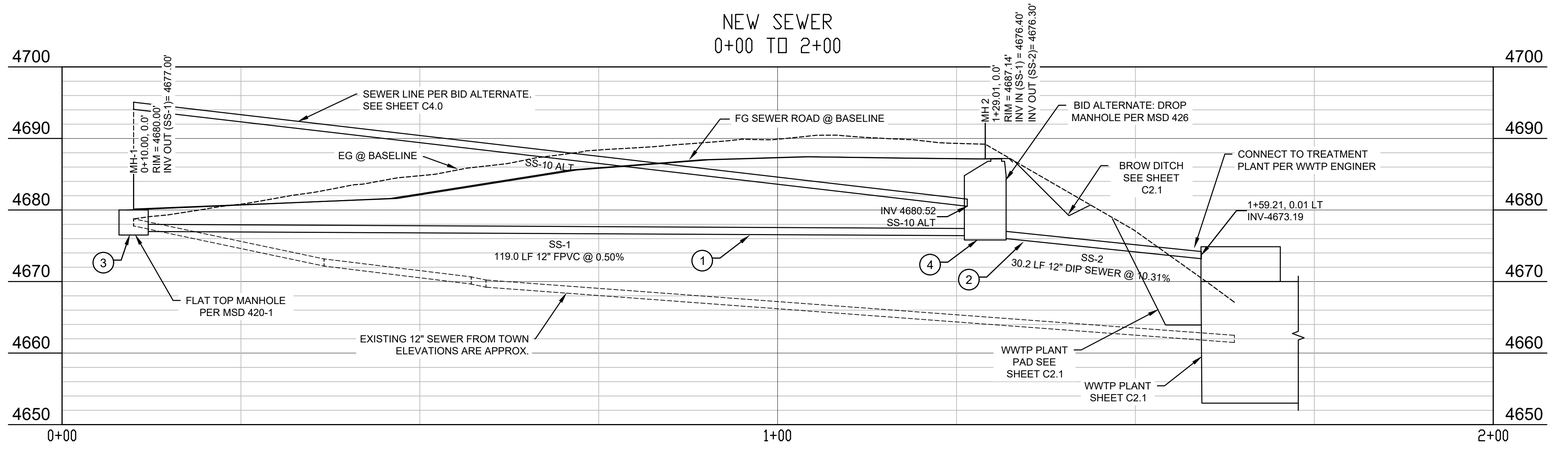

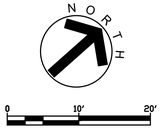

NO	BY	DATE	REVISIONS	DATE	APP



PREPARED BY:
DESIGNED BY:
DRAWN BY: NMW
CHECKED BY: KG
SCALE: AS SHOWN
DATE 10/31/25
JOB NO. 19-1101CE

TITLE
NEW SEWER P&P

JOB
JEROME WWTP
GRADING & UTILITIES PLANS
YAVAPAI COUNTY AZ

PREPARED BY:
SOUTHWESTERN ENVIRONMENTAL CONSULTANTS, INC
825 COVE PARKWAY
COTTONWOOD, AZ 86326
928-282-7787

SHEET
C3.1
19 OF 99 SHEETS

JOB NO. 19-1101CE
1695

SEC, Inc., All Rights Reserved. This document is protected under the United States Copyright Act. No part may be reproduced in any form or by any means or stored in a database or retrieval system, without the prior written permission of SEC, Inc. These plans/documents have been prepared using technical knowledge that would be applied by other qualified registrants who practice the same profession in the same area and at the same time. Efforts have been made to be as accurate as possible. However, plans/documents could contain unintentional technical inaccuracies, typographical errors or omissions. Users of these plans/documents should understand that it is highly probable that errors and omissions will occur in any plan/document preparation process.

S:\LAND PROJECTS 2004 ENGINEERING\19-1101CE JEROME WWTP\DWG\C3D\PLANS\XBSAN-19-1101CE.DWG

EXISTING EXPOSED PIPE AT WASH XING
EXISTING SEWER STRUCTURE
EXISTING SEWER
PARCEL LINES ARE APPROXIMATE PER COUNTY GIS MAPS
APPROX. TOWN LIMITS
EXISTING MINE RD
DOUGLAS RD
OPTIONAL ACCESS ROUTE
EXISTING 10" SEWER PIPE (EXPOSED AT WASH XING)
EXPOSED UNKNOWN PIPE
EXIST. JUNCTION BOX JB-1
CONNECT NEW SEWER
WEST TURNAROUND
SEE SHEET C4.4
UNIDENTIFIED WASH
EXIST. 4" ABS SEWER LATERAL 1
SEE SHEET C4.4
EXIST. JUNCTION BOX JB-2
EXIST. JUNCTION BOX JB-3
EXISTING SEWER
TO BE ABANDONED IN PLACE
EXIST. JUNCTION BOX JB-4
PROPOSED 12" SEWER
EXIST. 8" SEWER LATERAL 2
SEE SHEET C4.5
EXIST. 6" CLAY SEWER LATERAL 3
SEE SHEET C4.5
NEW STORM CATCH BASIN
SEE SHEET C4.5
CONNECT TO
MANHOLE 2. SEE
SHEET C3.1
EXIST. BAR SCREEN
NEW WWTP
SEE SHEET C2.1
SEWER ACCESS RD
SEE SHEET C2.7
SEWER TREATMENT PLANT ACCESS RD
SEE SHEETS C2.3 THRU C2.6
NORTH DRIVE
HAMPSHIRE AVENUE / 60S
HAMPSHIRE AVE
AZ HWY 89A
DOUGLAS RD

SHEET C4.1
SHEET C4.2
SHEET C4.3
SHEET C4.4

401-003-0029D
VERDE EXPLORATION LTD

401-009-005H
VERDE EXPLORATION LTD

401-03-001P
JEROME VERDE DEVELOPMENT CO.

401-003-001L
TOWN OF JEROME

401-003-0031D
VERDE EXPLORATION LTD

401-11-019V
DOSS & KOLLER

401-03-001N
TOWN OF JEROME

½" REBAR LOT PIN MARKED 4491
N: 1365024.28, E: 642592.65
ELEV=4654.33

½" REBAR LOT PIN MARKED RLS 32224
N: 1364201.32, E: 642110.19
ELEV=4832.28

½" REBAR LOT PIN MARKED RLS 32224
N: 1364259.41, E: 642191.45
ELEV=4827.73

MH-1 ALT, MH-2 ALT, MH-3 ALT, MH-4 ALT, MH-5 ALT, MH-6 ALT, MH-7 ALT, MH-8 ALT, MH-9 ALT, MH-10 ALT
SS-1 ALT, SS-2 ALT, SS-3 ALT, SS-4 ALT, SS-5 ALT, SS-6 ALT, SS-7 ALT, SS-7A ALT, SS-8 ALT, SS-9 ALT, SS-10 ALT
SS-LAT-1-1, SS-LAT-1-2, SS-LAT-2-2

0 40' 80' 160'
SCALE: 1"=80' @ 24"x36"

STRUCTURES					
STRUCTURE	DESC	RIM	INVERT	DEPTH (FT)	LOCATION
CO-EX-1-NEW	CLEANOUT	4802.180'	OUT = 4801.46'	0.72	N: 1364160.99 E: 641866.49
CO-EX-2-NEW	CLEANOUT	4770.445'	OUT = 4768.90'	1.55	N: 1364501.75 E: 642312.84
CO-EX3-NEW	CLEANOUT	4728.065'	OUT = 4727.55'	0.52	N: 1365059.93 E: 642836.62
MH-1 ALT	MANHOLE-48"	4789.609'	IN = 4784.55' OUT = 4784.45'	5.16	N: 1364193.22 E: 641895.93
MH-2 ALT	MANHOLE-48"	4787.913'	IN = 4782.96' OUT = 4782.86'	5.05	N: 1364224.86 E: 641988.17
MH-3 ALT	MANHOLE-48"	4780.910'	IN = 4775.35' OUT = 4775.25'	5.66	N: 1364296.85 E: 642100.74
MH-4 ALT	MANHOLE-48"	4772.099'	IN = 4766.74' OUT = 4766.64'	5.46	N: 1364395.50 E: 642208.64
MH-5 ALT	MANHOLE-48"	4759.803'	IN = 4754.64' IN = 4754.85' OUT = 4754.54'	5.26	N: 1364514.63 E: 642302.84
MH-6 ALT	MANHOLE-48"	4754.907'	IN = 4750.41' OUT = 4750.31'	4.59	N: 1364679.90 E: 642415.26
MH-7 ALT	MANHOLE-48"	4729.609'	IN = 4724.18' OUT = 4724.08'	5.53	N: 1364891.34 E: 642638.12
MH-8 ALT	MANHOLE-48"	4712.834'	IN = 4706.04' OUT = 4705.94'	6.89	N: 1364996.38 E: 642743.01
MH-9 ALT	MANHOLE-48"	4705.547'	IN = 4699.49' IN = 4700.39' OUT = 4699.39'	6.16	N: 1365075.93 E: 642809.37
MH-10 ALT	MANHOLE-48"	4704.172'	IN = 4699.06' OUT = 4698.96'	5.21	N: 1365179.64 E: 642843.49

PIPES				
PIPE	SIZE & TYPE	LENGTH	SLOPE	RADIUS
SS-1 ALT	NEW 12" FPVC SEWER	16.54'	15.36%	0.00
SS-2 ALT	NEW 12" FPVC SEWER	97.51'	1.53%	8856.68
SS-3 ALT	NEW 12" FPVC SEWER	134.32'	5.59%	378.94
SS-4 ALT	NEW 12" FPVC SEWER	151.93'	7.89%	1678.96
SS-5 ALT	NEW 12" FPVC SEWER	200.94'	2.06%	563.97
SS-6 ALT	NEW 12" FPVC SEWER	307.21'	8.51%	28124.53
SS-7 ALT	NEW 12" FPVC SEWER	150.27'	12.01%	277.65
SS-7A ALT	NEW 12" FPVC SEWER	146.41'	5.81%	779.23
SS-8 ALT	NEW 12" FPVC SEWER	104.13'	6.20%	296.23
SS-9 ALT	NEW 12" FPVC SEWER	109.85'	0.30%	286.54
SS-10 ALT	NEW 12" FPVC SEWER	155.46'	11.86%	278.54
SS-LAT-3-2	NEW 6' SEWER	27.25'	99.44%	0.00
SS-LAT 1-1	NEW 4' DIP SEWER	25.88'	1.00%	0.00
SS-LAT 1-2	NEW 4' SEWER	16.70'	80.70%	0.00
SS LAT-2-2	NEW 8' SEWER	12.60'	110.87%	0.00
SS LAT-3-1	NEW 6' SEWER	4.35'	1.77%	0.00
SS LAT 2-1	NEW 8' SEWER	3.71'	2.00%	0.00

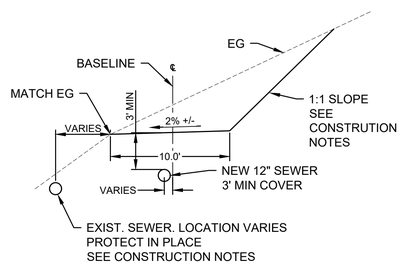

1 TYPICAL CONSTRUCTION ROAD SECTION
1"=6'

CONSTRUCTION NOTES
1. THE EXISTING SEWER IS VERY SHALLOW. EXTREME CAUTION IS REQUIRED TO ENSURE THE PIPE IS PROTECTED DURING CONSTRUCTION. EXISTING SEWER TO REMAIN OPERATIONAL AT ALL TIMES UNTIL THE NEW SEWER IS ACTIVATED.
2. THE EXISTING LATERAL SEWERS SHALL BE TEMPORARILY RE-ROUTED AS NEEDED DURING CONSTRUCTION. TO REMAIN OPERATIONAL UNTIL THE NEW SEWER IS ACTIVATED
3. WASTE MATERIAL FROM THE SEWER AND ROAD CONSTRUCTION SHALL BE REMOVED FROM PRIVATELY OWNED PROPERTIES.
4. CUT SLOPES STEEPER THAN 2:1 SHOULD BE EVALUATED AND APPROVED BY GEOTECHNICAL ENGINEER.
5. ALL TEMPORARY AND NEW SEWER PIPES AND STRUCTURES SHALL BE INSTALLED PER THE SPECIFICATIONS PROVIDED BY THE SEWER PLANT ENGINEER.
6. NEW EASEMENTS ARE NEEDED FOR BOTH EXISTING AND PROPOSED SEWER ACROSS PRIVATE PROPERTIES. TO BE COORDINATED BY THE TOWN.

EARTHWORK ESTIMATE (CUBIC YARDS)*			
	CUT	FILL	NET
SEWER ROAD	4,043	33	4010 CUT
*NO SHRINKAGE OR EXPANSION FACTORS APPLIED. EARTHWORK IS TO FINISHED GRADE. DEPTH TO SUBGRADE AND PIPE TRENCHING NOT ACCOUNTED FOR			

ESTIMATE OF SEWER QTY'S		
ITEM	QTY	UNITS
12" FPVC PIPE	1,568	LF
4" PVC SEWER	43	LF
6" PVC SEWER	32	LF
8" PVC SEWER	16	LF
48" MANHOLE	10	EA
CLEANOUT	3	EA

NO	BY	DATE	REVISIONS	DATE	APP

Professional Engineer Seal: 49108 KRISHAN GEVINDA GINIGE 10/31/25 DATE SIGNED ARIZONA, U.S.A.

PREPARED BY:
DESIGNED BY:
DRAWN BY: NMW
CHECKED BY: KG
DATE 10/31/25
SCALE: AS SHOWN
JOB NO. 19-1101CE

TITLE: ALT SEWER SITE MAP, SURVEY CONTROL

JOB: JEROME WWTP GRADING & UTILITIES PLANS — YAVAPAI COUNTY AZ

PREPARED BY:
SOUTHWESTERN ENVIRONMENTAL CONSULTANTS, INC
825 COVE PARKWAY
COTTONWOOD, AZ 86326
928-282-7787

SHEET
C4.0
20 OF 99 SHEETS

JOB NO. 19-1101CE
1696

© SEC, Inc., All Rights Reserved. This document is protected under the United States Copyright Act. No part may be reproduced in any form or by any means or stored in a database or retrieval system, without the prior written permission of SEC, Inc. These plans/documents could contain unintentional technical inaccuracies, typographical errors or omissions. Users of these plans/documents should understand that it is highly probable that errors and omissions will occur in any plan/document preparation process. However, plans/documents could contain unintentional technical inaccuracies, typographical errors or omissions. Users of these plans/documents should understand that it is highly probable that errors and omissions will occur in any plan/document preparation process.

S:\LAND PROJECTS 2004 ENGINEERING\19-1101CE JEROME WWTP\DWG\C3D\PLANS\XBSAN-ALT-19-1101CE.DWG

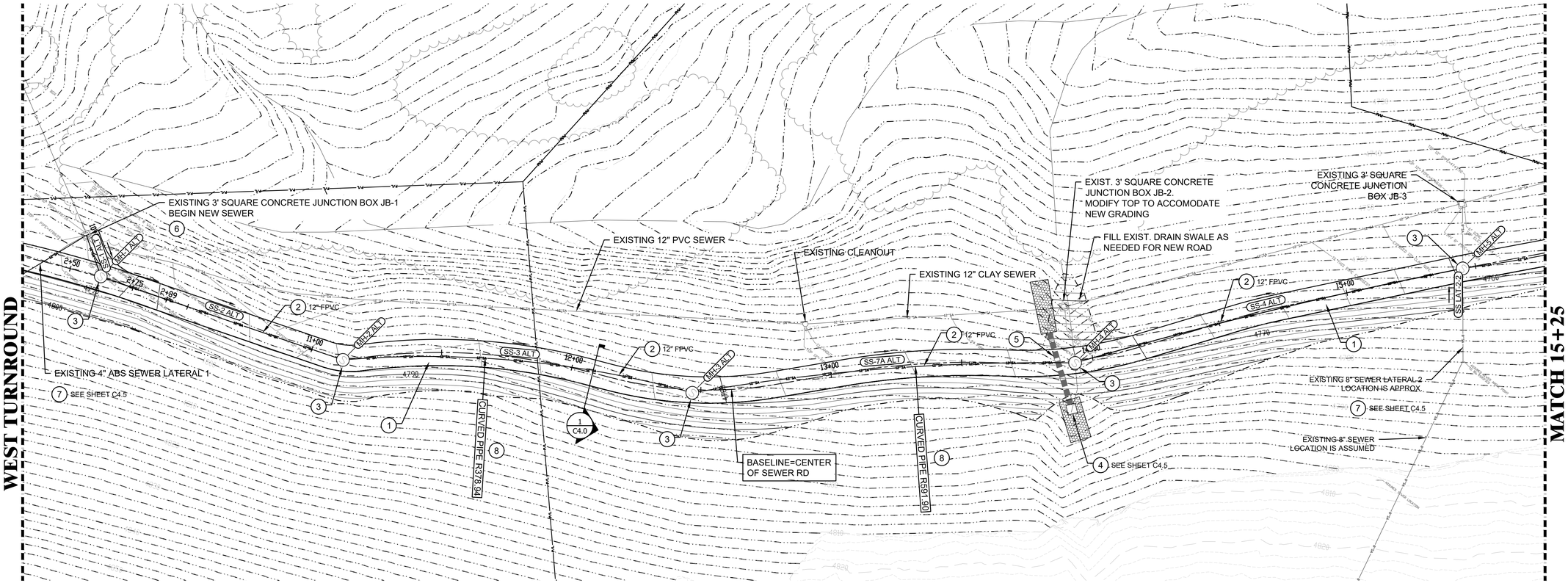

SEWER CALLOUTS. SEE CONSTRUCTION NOTES ON SHEET C4.0	
1	EXCAVATE SEWER CONSTRUCTION ROAD PER DETAIL 1, SHEET C4.0
2	INSTALL SEWER PIPE. SIZE AND TYPE PER PLAN. SEE NOTE 5, SHEET C4.0
3	INSTALL 48" SEWER MANHOLE PER MSD 420-1
4	INSTALL CATCH BASIN. SEE SHEET C4.5
5	INSTALL CULVERT. SEE SHEET C4.5
6	CONNECT NEW SEWER PIPE TO EXISTING JUNCTION BOX. CONTRACTOR TO PROVIDE DETAILS & SHOP DRAWINGS TO PROJECT ENGINEER FOR APPROVAL PRIOR TO CONNECTION.
7	PROTECT EXISTING SEWER LATERAL IN PLACE. CONNECT TO NEW SEWER WHEN ACTIVE. SEE PROFILES FOR DETAILS
8	INSTALL CURVED SEWER PIPE. RADIUS PER PLAN. SEE NOTE 5, SHEET C4.0.

CONSTRUCTION NOTES

1. THE EXISTING SEWER PIPES ARE VERY SHALLOW. EXTREME CAUTION IS REQUIRED TO ENSURE THE PIPES ARE PROTECTED DURING CONSTRUCTION. EXISTING SEWER TO REMAIN OPERATIONAL AT ALL TIMES UNTIL THE NEW SEWER IS ACTIVATED.
2. THE EXISTING LATERAL SEWERS SHALL BE TEMPORARILY RE-ROUTED AS NEEDED DURING CONSTRUCTION UNTIL THE NEW SEWER IS ACTIVATED.
3. WASTE MATERIAL FROM THE SEWER AND ROAD CONSTRUCTION SHALL BE REMOVED FROM PRIVATELY OWNED PROPERTIES.
4. CUT SLOPES STEEPER THAN 2:1 SHOULD BE EVALUATED AND APPROVED BY GEOTECHNICAL ENGINEER.
5. ALL TEMPORARY AND NEW SEWER PIPES AND STRUCTURES SHALL BE INSTALLED PER THE SPECIFICATIONS PROVIDED BY THE SEWER PLANT ENGINEER.
6. NEW EASEMENTS ARE NEEDED FOR BOTH EXISTING AND PROPOSED SEWER ACROSS PRIVATE LAND. TO BE COORDINATED BY THE TOWN.

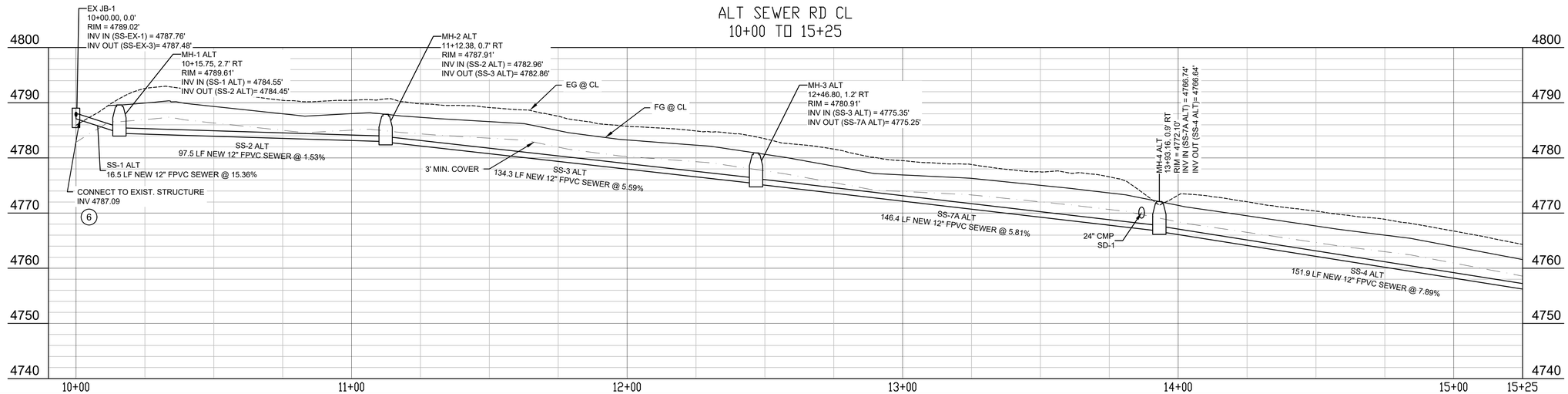

S:\LAND PROJECTS 2004 ENGINEERING\19-1101CE JEROME WWTP\DWG\C3D\PLANS\XBSAN-ALT-19-1101CE.DWG

NO	BY	DATE	REVISIONS	DATE	APP

Professional Engineer
CERTIFICATE NO.
49100
KRISHAN GEVINDA GINIGE
10/31/25
DATE SIGNED
ARIZONA, U.S.A.

PREPARED BY:
DESIGNED BY:
DRAWN BY: NMW
CHECKED BY: KG
SCALE: AS SHOWN
DATE 10/31/25
JOB NO. 19-1101CE

TITLE *ALT SEWER P&P 10+00 TO 15+25*

JOB *JEROME WWTP GRADING & UTILITIES PLANS*

YAVAPAI COUNTY AZ

PREPARED BY:
SEC Inc.
SOUTHWESTERN ENVIRONMENTAL CONSULTANTS, INC
825 COVE PARKWAY
COTTONWOOD, AZ 86326
928-282-7787

SHEET
C4.1
21 OF 99 SHEETS

JOB NO. 19-1101CE

1697

SEC, Inc. All Rights Reserved. This document is protected under the United States Copyright Act. No part may be reproduced in any form or by any means or stored in a database or retrieval system, without the prior written permission of SEC, Inc. These plans/documents could contain unintentional technical inaccuracies, typographical errors or omissions. Users of these plans/documents should understand that it is highly probable that errors and omissions will occur in any plan/document preparation process. However, plans/documents have been prepared using technical knowledge that would be applied by other qualified registrants who practice the same profession in the same area and at the same time. Efforts have been made to be as accurate as

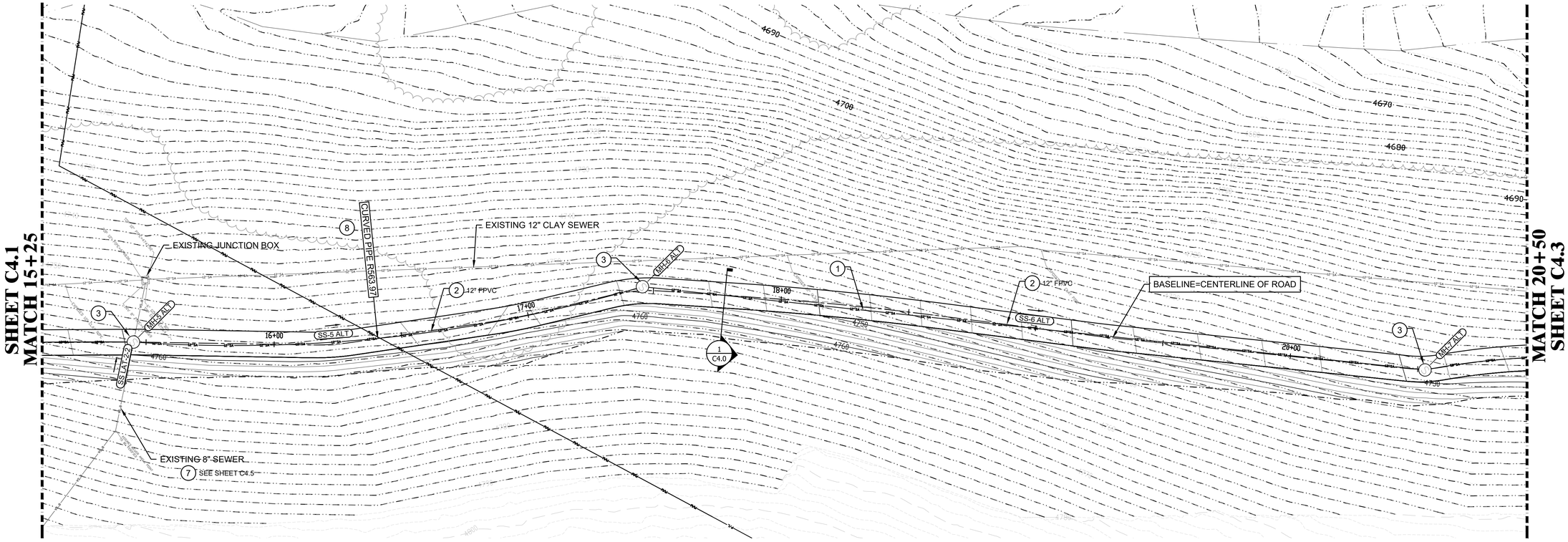

SEWER CALLOUTS. SEE CONSTRUCTION NOTES ON SHEET C4.0	
1	EXCAVATE SEWER CONSTRUCTION ROAD PER DETAIL 1, SHEET C4.0
2	INSTALL SEWER PIPE. SIZE AND TYPE PER PLAN. SEE NOTE 5, SHEET C4.0
3	INSTALL 48" SEWER MANHOLE PER MSD 420-1
4	INSTALL CATCH BASIN. SEE SHEET C4.5
5	INSTALL CULVERT. SEE SHEET C4.5
6	CONNECT NEW SEWER PIPE TO EXISTING JUNCTION BOX. CONTRACTOR TO PROVIDE DETAILS & SHOP DRAWINGS TO PROJECT ENGINEER FOR APPROVAL PRIOR TO CONNECTION.
7	PROTECT EXISTING SEWER LATERAL IN PLACE. CONNECT TO NEW SEWER WHEN ACTIVE. SEE PROFILES FOR DETAILS
8	INSTALL CURVED SEWER PIPE. RADIUS PER PLAN. SEE NOTE 5, SHEET C4.0.

CONSTRUCTION NOTES

1. THE EXISTING SEWER PIPES ARE VERY SHALLOW. EXTREME CAUTION IS REQUIRED TO ENSURE THE PIPES ARE PROTECTED DURING CONSTRUCTION. EXISTING SEWER TO REMAIN OPERATIONAL AT ALL TIMES UNTIL THE NEW SEWER IS ACTIVATED.
2. THE EXISTING LATERAL SEWERS SHALL BE TEMPORARILY RE-ROUTED AS NEEDED DURING CONSTRUCTION UNTIL THE NEW SEWER IS ACTIVATED.
3. WASTE MATERIAL FROM THE SEWER AND ROAD CONSTRUCTION SHALL BE REMOVED FROM PRIVATELY OWNED PROPERTIES.
4. CUT SLOPES STEEPER THAN 2:1 SHOULD BE EVALUATED AND APPROVED BY GEOTECHNICAL ENGINEER.
5. ALL TEMPORARY AND NEW SEWER PIPES AND STRUCTURES SHALL BE INSTALLED PER THE SPECIFICATIONS PROVIDED BY THE SEWER PLANT ENGINEER.
6. NEW EASEMENTS ARE NEEDED FOR BOTH EXISTING AND PROPOSED SEWER ACROSS PRIVATE LAND. TO BE COORDINATED BY THE TOWN.

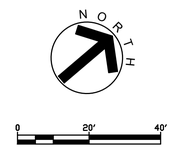

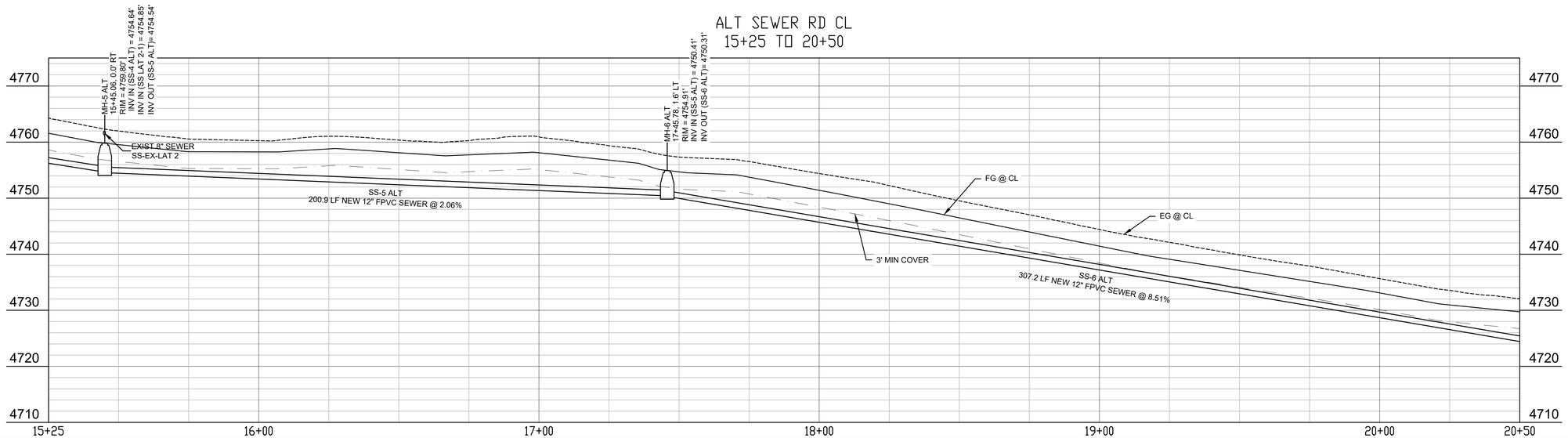

NO	BY	DATE	REVISIONS	DATE	APP

4910
KRISHAN GEVINDA GINIGE
10/31/25
REGISTERED PROFESSIONAL ENGINEER
ARIZONA, U.S.A.

PREPARED BY:
DESIGNED BY:
DRAWN BY: NMW
CHECKED BY: KG
DATE 10/31/25
SCALE: AS SHOWN
JOB NO. 19-1101CE

TITLE
ALT SEWER P&P 15+25 TO 20+50

JOB
JEROME WWTP
GRADING & UTILITIES PLANS
YAVAPAI COUNTY AZ

PREPARED BY:
SEC Inc.
SOUTHWESTERN ENVIRONMENTAL CONSULTANTS, INC
825 COVE PARKWAY
COTTONWOOD, AZ 86326
928-282-7787

SHEET
C4.2
22 OF 99 SHEETS

JOB NO. 19-1101CE
1698

Item I.
Professional Engineer's Seal and Certificate No. 49106 KRISHAN GEVINDA GINIGE 10/31/25 REGISTERED ARIZONA, U.S.A.
These plans/documents have been prepared using technical knowledge that would be applied by other qualified registrants who practice the same profession in the same area and at the same time. Efforts have been made to be as accurate as possible. However, plans/documents could contain unintentional technical inaccuracies, typographical errors or omissions. Users of these plans/documents should understand that it is highly probable that errors and omissions will occur in any plan/document preparation process.
© SEC, Inc., All Rights Reserved. This document is protected under the United States Copyright Act. No part may be reproduced in any form or by any means or stored in a database or retrieval system, without the prior written permission of SEC, Inc. These plans/documents have been prepared using technical knowledge that would be applied by other qualified registrants who practice the same profession in the same area and at the same time. Efforts have been made to be as accurate as possible. However, plans/documents could contain unintentional technical inaccuracies, typographical errors or omissions. Users of these plans/documents should understand that it is highly probable that errors and omissions will occur in any plan/document preparation process.

S:\LAND PROJECTS 2004 ENGINEERING\19-1101CE JEROME WWTP\DWG\C3D\PLANS\XBSAN-ALT-19-1101CE.DWG

SHEET C4.2
MATCH 20+50

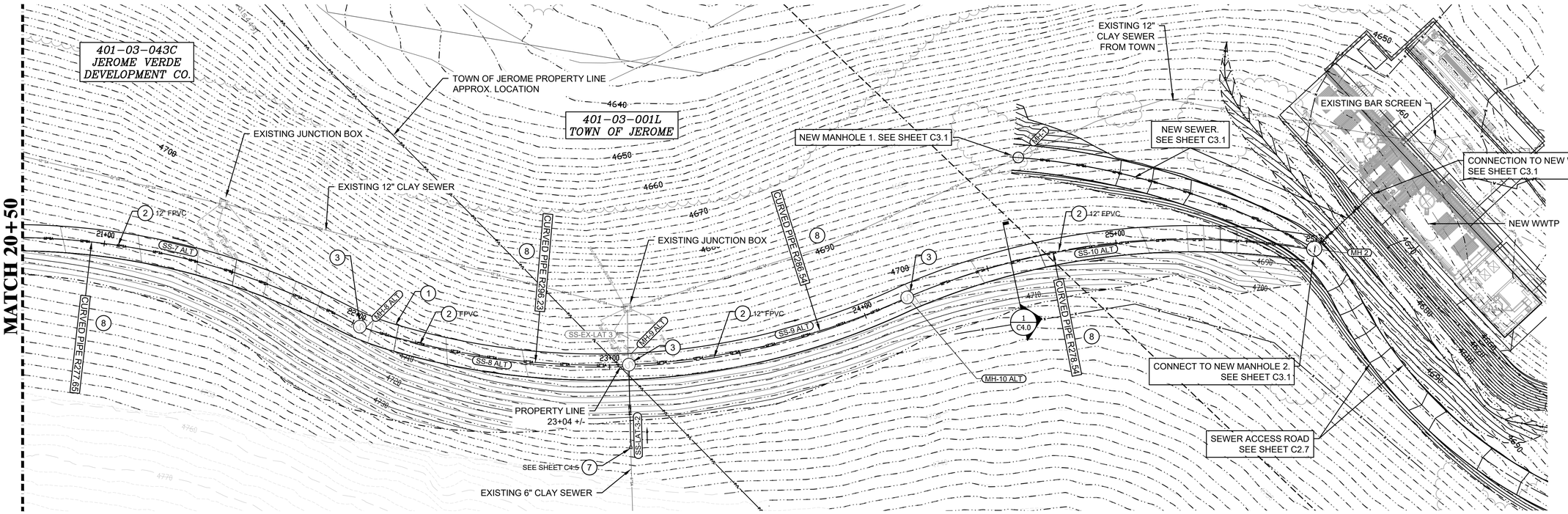

SEWER CALLOUTS. SEE CONSTRUCTION NOTES ON SHEET C4.0	
1	EXCAVATE SEWER CONSTRUCTION ROAD PER DETAIL 1, SHEET C4.0
2	INSTALL SEWER PIPE. SIZE AND TYPE PER PLAN. SEE NOTE 5, SHEET C4.0
3	INSTALL 48" SEWER MANHOLE PER MSD 420-1
4	INSTALL CATCH BASIN. SEE SHEET C4.5
5	INSTALL CULVERT. SEE SHEET C4.5
6	CONNECT NEW SEWER PIPE TO EXISTING JUNCTION BOX. CONTRACTOR TO PROVIDE DETAILS & SHOP DRAWINGS TO PROJECT ENGINEER FOR APPROVAL PRIOR TO CONNECTION.
7	PROTECT EXISTING SEWER LATERAL IN PLACE. CONNECT TO NEW SEWER WHEN ACTIVE. SEE PROFILES FOR DETAILS
8	INSTALL CURVED SEWER PIPE. RADIUS PER PLAN. SEE NOTE 5, SHEET C4.0.

CONSTRUCTION NOTES

1. THE EXISTING SEWER PIPES ARE VERY SHALLOW. EXTREME CAUTION IS REQUIRED TO ENSURE THE PIPES ARE PROTECTED DURING CONSTRUCTION. EXISTING SEWER TO REMAIN OPERATIONAL AT ALL TIMES UNTIL THE NEW SEWER IS ACTIVATED.
2. THE EXISTING LATERAL SEWERS SHALL BE TEMPORARILY RE-ROUTED AS NEEDED DURING CONSTRUCTION UNTIL THE NEW SEWER IS ACTIVATED.
3. WASTE MATERIAL FROM THE SEWER AND ROAD CONSTRUCTION SHALL BE REMOVED FROM PRIVATELY OWNED PROPERTIES.
4. CUT SLOPES STEEPER THAN 2:1 SHOULD BE EVALUATED AND APPROVED BY GEOTECHNICAL ENGINEER.
5. ALL TEMPORARY AND NEW SEWER PIPES AND STRUCTURES SHALL BE INSTALLED PER THE SPECIFICATIONS PROVIDED BY THE SEWER PLANT ENGINEER.
6. NEW EASEMENTS ARE NEEDED FOR BOTH EXISTING AND PROPOSED SEWER ACROSS PRIVATE LAND. TO BE COORDINATED BY THE TOWN.

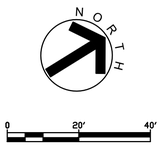

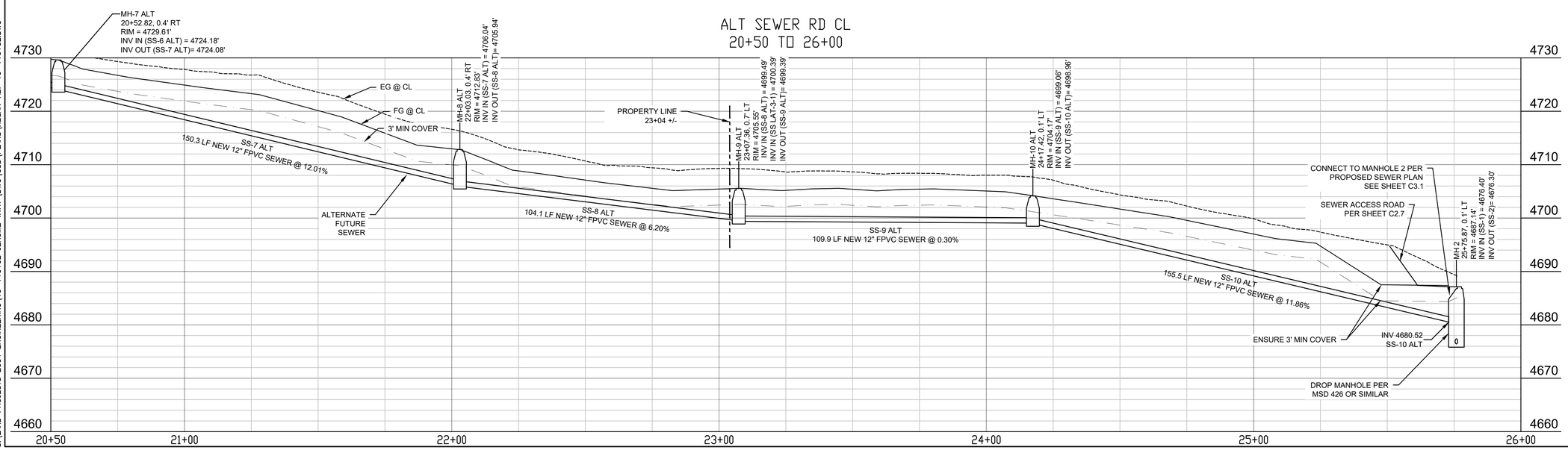

NO	BY	DATE	REVISIONS	DATE	APP

Professional Engineer
49108
KRISHAN GEVINDA GINIGE
10/31/25
REGISTERED
ARIZONA, U.S.A.

PREPARED BY:
DESIGNED BY:
DRAWN BY: NMW
CHECKED BY: KG
SCALE: AS SHOWN
DATE 10/31/25
JOB NO. 19-1101CE

TITLE
ALT SEWER P&P 20+50 TO 26+00

JOB
JEROME WWTP
GRADING & UTILITIES PLANS
YAVAPAI COUNTY AZ

PREPARED BY:
SOUTHWESTERN ENVIRONMENTAL CONSULTANTS, INC
825 COVE PARKWAY
COTTONWOOD, AZ 86326
928-282-7787

SHEET
C4.3
23 OF 99 SHEETS

JOB NO. 19-1101CE
1699

This plan set has been prepared using technical knowledge that would be applied by other qualified registrants who practice this same profession in the same area and at the same time. Efforts have been made to be as accurate as possible. However, plans/documents could contain unintentional technical inaccuracies, typographical errors or omissions. Users of these plans/documents should understand that it is highly probable that errors and omissions will occur in any plan/document preparation process.

SEC, Inc., All Rights Reserved. This document is protected under the United States Copyright Act. No part may be reproduced in any form or by any means or stored in a database or retrieval system, without the prior written permission of SEC, Inc. These plans/documents have been prepared for the exclusive use of the client for the purpose stated. Any use of these plans/documents for other purposes, or by others, without the written permission of SEC, Inc. is prohibited.

S:\LAND PROJECTS 2004 ENGINEERING\19-1101CE JEROME WWTP\DWG\C3D\PLANS\XBSAN-ALT-19-1101CE.DWG

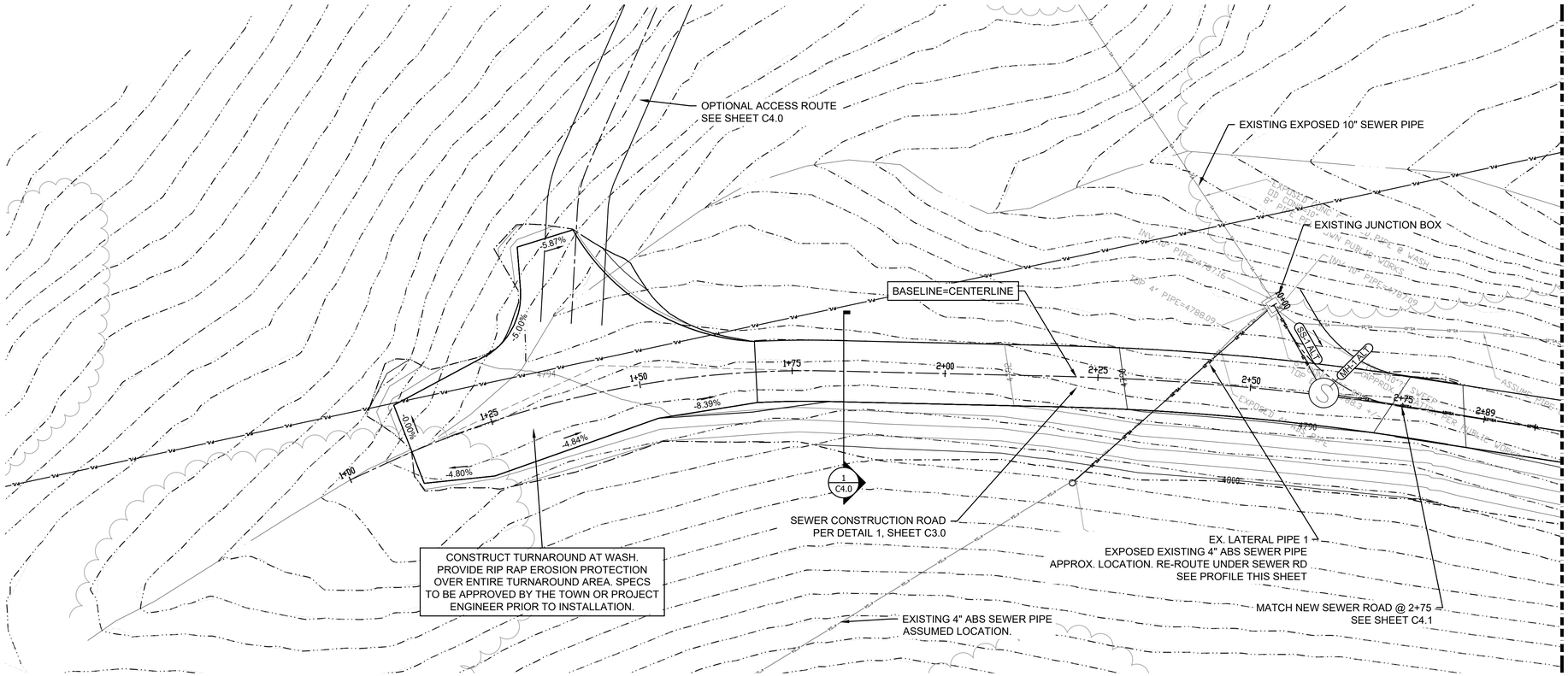
OPTIONAL ACCESS ROUTE
SEE SHEET C4.0
EXISTING EXPOSED 10" SEWER PIPE
EXISTING JUNCTION BOX
BASELINE=CENTERLINE
MATCH SEWER ROAD
SEE SHEET C4.1
-5.87%
-5.00%
-8.39%
-4.84%
-4.80%
-0.00%
1+00
1+25
1+50
1+75
2+00
2+25
2+50
2+75
2+89
4800
4794
4790
4788.09
4787.76
4787.90
4788.98
4789.09
4789.16
4789.19
4789.23
4789.26
4789.29
4789.32
4789.35
4789.38
4789.41
4789.44
4789.47
4789.50
4789.53
4789.56
4789.59
4789.62
4789.65
4789.68
4789.71
4789.74
4789.77
4789.80
4789.83
4789.86
4789.89
4789.92
4789.95
4789.98
4790.01
4790.04
4790.07
4790.10
4790.13
4790.16
4790.19
4790.22
4790.25
4790.28
4790.31
4790.34
4790.37
4790.40



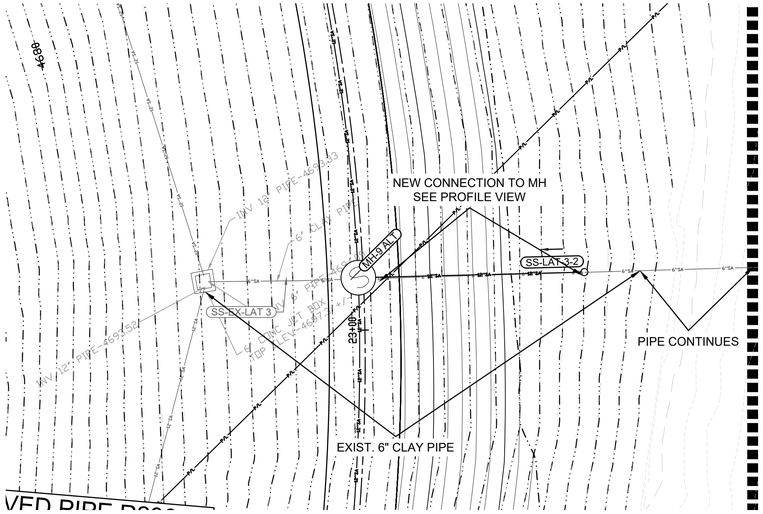

EXIST SEW LAT 3
0+00 TO 0+70

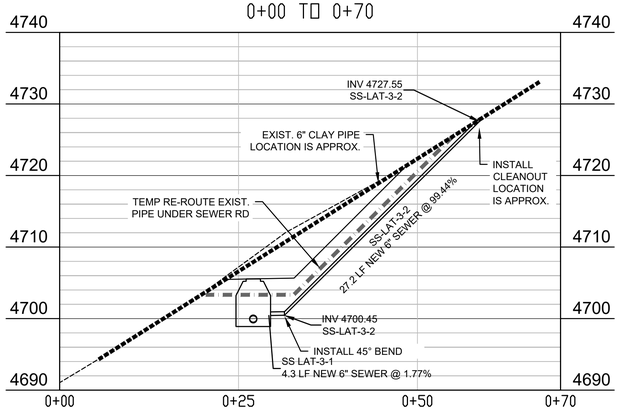

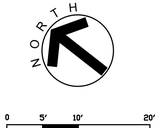

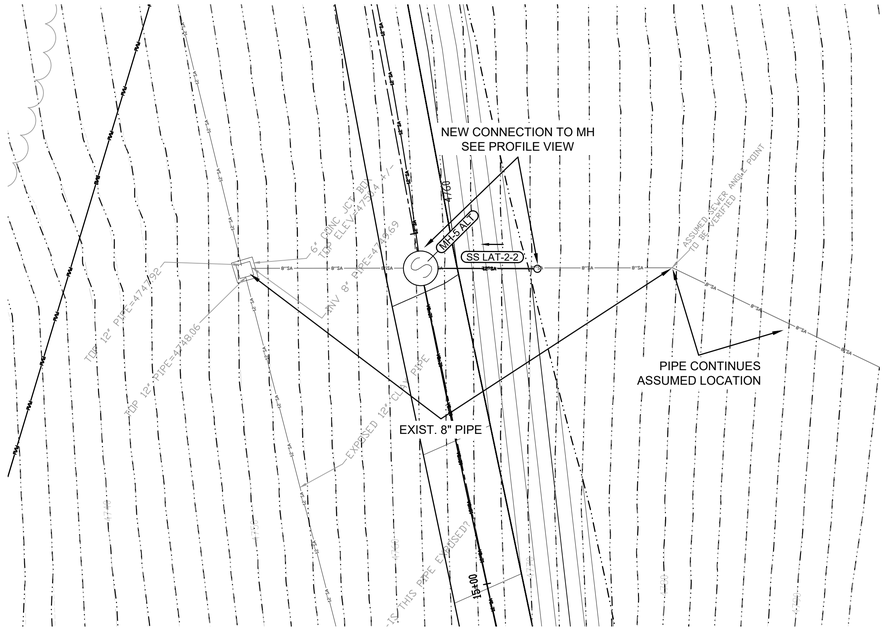

EX SEW LAT 2
0+00 TO 0+75

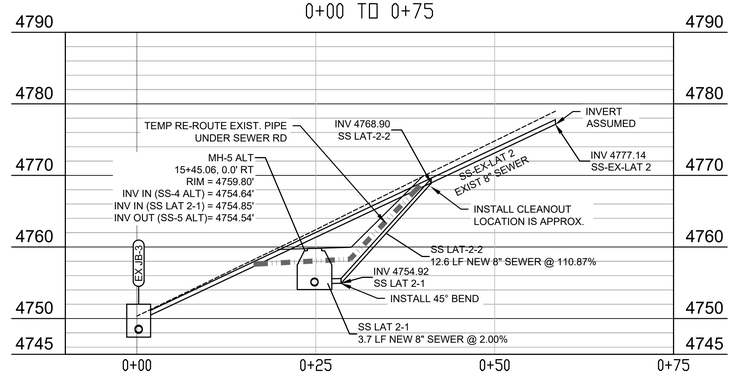

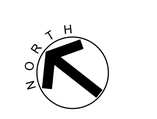

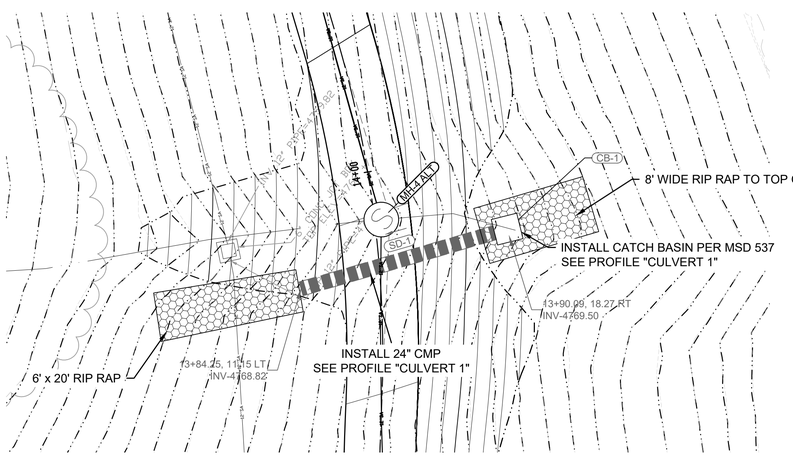

CULVERT 1
0+00 TO 0+75

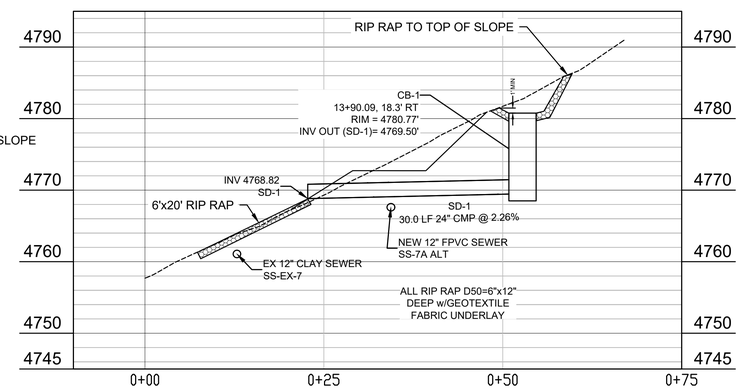

CONSTRUCTION NOTES

1. THE EXISTING SEWER PIPES ARE VERY SHALLOW. EXTREME CAUTION IS REQUIRED TO ENSURE THE PIPES ARE PROTECTED DURING CONSTRUCTION. EXISTING SEWER TO REMAIN OPERATIONAL AT ALL TIMES UNTIL THE NEW SEWER IS ACTIVATED.
2. THE EXISTING LATERAL SEWERS SHALL BE TEMPORARILY RE-ROUTED AS NEEDED DURING CONSTRUCTION UNTIL THE NEW SEWER IS ACTIVATED.
3. WASTE MATERIAL FROM THE SEWER AND ROAD CONSTRUCTION SHALL BE REMOVED FROM PRIVATELY OWNED PROPERTIES.
4. CUT SLOPES STEEPER THAN 2:1 SHOULD BE EVALUATED AND APPROVED BY GEOTECHNICAL ENGINEER.
5. ALL TEMPORARY AND NEW SEWER PIPES AND STRUCTURES SHALL BE INSTALLED PER THE SPECIFICATIONS PROVIDED BY THE SEWER PLANT ENGINEER.
6. NEW EASEMENTS ARE NEEDED FOR BOTH EXISTING AND PROPOSED SEWER ACROSS PRIVATE LAND. TO BE COORDINATED BY THE TOWN.

NO	BY	DATE	REVISIONS	DATE	APP



PREPARED BY:
DESIGNED BY:
DRAWN BY: NMW
CHECKED BY: KG
DATE: 10/31/25
SCALE: AS SHOWN
JOB NO. 19-1101CE

TITLE
ALT SEWER LATERAL PROFILES

JOB
JEROME WWTP
GRADING & UTILITIES PLANS
YAVAPAI COUNTY AZ

PREPARED BY:
SOUTHWESTERN ENVIRONMENTAL CONSULTANTS, INC
825 COVE PARKWAY
COTTONWOOD, AZ 86326
928-282-7787

SHEET
C4.5
25 OF 99 SHEETS

JOB NO. 19-1101CE
1701

These plans have been prepared using technical knowledge that would be applied by other qualified registrants who practice the same profession in the same area and at the same time. Efforts have been made to be as accurate as possible. However, plans/documents could contain unintentional technical inaccuracies, typographical errors or omissions. Users of these plans/documents should understand that it is highly probable that errors and omissions will occur in any plan/document preparation process.

SEC, Inc., All Rights Reserved. This document is protected under the United States Copyright Act. No part may be reproduced in any form or by any means or stored in a database or retrieval system, without the prior written permission of SEC, Inc. These plans/documents have been prepared

S:\LAND PROJECTS 2004 ENGINEERING\19-1101CE JEROME WWTP\DWG\C3D\PLANS\XBSAN-ALT-19-1101CE.DWG



EXISTING EQUIPMENT AND COMPONENTS

1. BAR SCREEN
2. 2" PVC POTABLE WATERLINE
3. STORAGE TANKS (ABANDONED)
4. PRIMARY SETTLING TANK
5. DOSING TANK A
6. TRICKLING FILTER (TYP.)
7. REED BEDS (TYP.)
8. DOSING TANK B
9. CONSTRUCTED WETLAND CELLS (TYP.)
10. LEVEL ADJUST SUMP (TYP.)
11. CHLORINE CONTACT CHAMBERS

EXISTING SITE PLAN

NORTH

40 20 0 40 80

NO	BY	DATE	REVISIONS	DATE	APP.

THESE DRAWINGS ARE THE PROPERTY OF P.A.C.E. AND SHALL NOT BE REPRODUCED IN ANY MANNER NOR BE USED FOR CONSTRUCTION UNLESS STAMPED 'ISSUED FOR CONSTRUCTION'.

Registered Professional Engineer (Civil) CERTIFICATE NO. 70097 TAYLOR B. PIERCE Signed ARIZONA, U.S.A. Expires 12/31/28

PREPARED BY: PACE
DESIGNED BY: NE
DRAWN BY: DS, WW
CHECKED BY: TP
SCALE: AS NOTED
DATE: NOV 2025
JOB NO. B614

TITLE: **EXISTING SITE PLAN**

JOB: TOWN OF JEROME WASTEWATER TREATMENT PLANT
YAVAPAI CO. AZ

100% ISSUED FOR BID

PREPARED BY:
PACE
Advanced Water Engineering
8723 E. VIA DE VENTURA, SUITE A, SCOTTSDALE, CA 85258
P: (480) 991-3955 | www.pacewater.com
TAYLOR B. PIERCE R.C.E. 70097 DATE

SHEET
M1.0
26 OF 99 SHEETS

JOB NO. B614

W:\B614\Engineering\B614-30sheets\B614- M1.0 EXISTING SITE PLAN.dwg - Tab: SITE PLAN - by neddington on 03/10/26 at 2:04:43 PM

1702



CONSTRUCTION NOTES:

1. INSTALL TEMPORARY 12" BYPASS FOR THE EXISTING SEWER INFLUENT LINE.
2. REMOVE EXISTING BAR SCREEN AND RELOCATE UPSTREAM OF THE EXISTING PRIMARY SETTLING TANK.
3. INSTALL TEMPORARY BAR SCREEN AND 12" SEWER BYPASS LINE TO THE PRIMARY SETTLING TANK.
4. DEMOLISH AND REMOVE THE EXISTING TANK SAND FILTER, TANK CLARIFIER, STORAGE BUILDING, AND STATIC SCREEN.
5. CUT AND CAP EXISTING 2" WATER SERVICE TO THE WWTP.
6. DEMOLISH AND REMOVE THE EXISTING STORAGE SHED.
7. CUT AND CAP PIPE FROM THE PRIMARY SETTLING TANK TO THE EAST REED BED.
8. CUT AND CAP LINE FROM DOSING TANK A TO EAST TRICKLING FILTER.
9. LOCATE, CUT AND CAP LINE FROM SAND FILTER TANK.
10. CUT, CAP AND PROTECT IN PLACE EAST TRICKLING FILTER.
11. CUT AND CAP DRAIN LINE FROM EAST TRICKLING FILTER UPSTREAM OF WEST TRICKLING FILTER LINE TIE-IN LOCATION.
12. REMOVE ALL EXISTING PIPING WITHIN THE EAST REED BED.
13. CUT AND CAP EAST REED BED DRAIN LINE AT THE EXISTING MANHOLE.
14. PROTECT IN PLACE.
15. REMOVE APPROX. 140 LF OF EXISTING FENCE.

NOTES:
1. CONTRACTOR TO PROVIDE A SEQUENCE OF CONSTRUCTION TO ENGINEER FOR REVIEW PRIOR TO CONSTRUCTION. CONTRACTOR SHALL BE RESPONSIBLE FOR ALL MEANS AND METHODS.

DEMOLITION PLAN PH-I

NORTH

40 20 0 40 80

NO	BY	DATE	REVISIONS	DATE	APP.

Registered Professional Engineer (Civil) CERTIFICATE NO. 70097 TAYLOR B. PIERCE Signed ARIZONA, U.S.A. Expires 12/31/28

THESE DRAWINGS ARE THE PROPERTY OF P.A.C.E. AND SHALL NOT BE REPRODUCED IN ANY MANNER NOR BE USED FOR CONSTRUCTION UNLESS STAMPED 'ISSUED FOR CONSTRUCTION'.

PREPARED BY: PACE
DESIGNED BY: NE
DRAWN BY: DS, WW
CHECKED BY: TP
SCALE: AS NOTED
DATE: NOV 2025
JOB NO. B614

TITLE: **DEMOLITION PLAN PH-I**

JOB: TOWN OF JEROME
WASTEWATER
TREATMENT PLANT
YAVAPAI CO. AZ

100% ISSUED FOR BID

PREPARED BY:

PACE
Advanced Water Engineering
8723 E. Via de Commercio, Suite 2-114, Scottsdale, CA 85258
P. (480) 991-3595 | www.pacewater.com

TAYLOR B. PIERCE R.C.E 70097 DATE

SHEET
M1.1
27 OF 99 SHEETS

JOB NO. B614

W:\B614 Engineering\B614-30\sheets\B614 - M1.1 DEMO PLANS PH-I.dwg - Tab: M1.1 - by reddington on 11/17/25 at 10:25:59 AM



CONSTRUCTION NOTES:

1. REMOVE TEMPORARY BYPASS PIPING FROM THE INFLUENT LINE ONCE FLOW HAS BEEN DIVERTED THROUGH NEW WWTP.
2. DEMOLISH AND REMOVE EXISTING PRIMARY SETTLING TANK. REMOVE ALL ABOVE GRADE PIPING & CAP AND ABANDON IN PLACE ALL BELOW GRADE PIPING.
3. DEMOLISH AND REMOVE EXISTING DOSING TANK A. REMOVE ALL ABOVE GRADE PIPING & CAP AND ABANDON IN PLACE ALL BELOW GRADE PIPING.
4. REMOVE ALL ABOVE GRADE PIPING & CAP AND ABANDON IN PLACE ALL BELOW GRADE PIPING. ABANDON IN PLACE WEST TRICKLING FILTER.
5. CAP AND ABANDON IN PLACE EXISTING SEPTIC TANK. REMOVE ALL ABOVE GRADE PIPING & CAP AND ABANDON IN PLACE ALL BELOW GRADE PIPING.
6. ABANDON IN PLACE EXISTING WEST REED BED. REMOVE ALL ABOVE GRADE PIPING & CAP AND ABANDON IN PLACE ALL BELOW GRADE PIPING.
7. CAP AND ABANDON IN PLACE EXISTING MANHOLE. CUT AND CAP ALL PIPING BELOW GRADE AND ABANDON IN PLACE.
8. CAP AND ABANDON IN PLACE EXISTING DOSING TANK B. REMOVE ALL ABOVE GRADE PIPING & CAP AND ABANDON IN PLACE ALL BELOW GRADE PIPING.
9. ABANDON IN PLACE EXISTING WEST WETLAND CELL. REMOVE ALL ABOVE GRADE PIPING & CAP AND ABANDON IN PLACE ALL BELOW GRADE PIPING. REUSE TRAFFIC BARRIER FOR NEW OVERFLOW BASIN.
10. REMOVE ALL PIPING WITHIN THE THREE EAST WETLAND BASINS & CUT, CAP, AND ABANDON IN PLACE ALL PIPING OUTSIDE THE BASINS.
11. CAP AND ABANDON IN PLACE EAST LEVEL ADJUST SUMPS. CUT, CAP AND ABANDON IN PLACE ALL BELOW GRADE PIPING.
12. CAP AND ABANDON IN PLACE WEST LEVEL ADJUST SUMP. CUT, CAP AND ABANDON IN PLACE ALL BELOW GRADE PIPING.
13. CAP AND ABANDON IN PLACE EXISTING CHLORINE CONTACT CHAMBER. CUT, CAP AND ABANDON IN PLACE ALL BELOW GRADE PIPING.

DEMOLITION PLAN PH-II

NORTH

40 20 0 40 80

NO	BY	DATE	REVISIONS	DATE	APP.

THESE DRAWINGS ARE THE PROPERTY OF P.A.C.E. AND SHALL NOT BE REPRODUCED IN ANY MANNER NOR BE USED FOR CONSTRUCTION UNLESS STAMPED 'ISSUED FOR CONSTRUCTION'.

Registered Professional Engineer (Civil) CERTIFICATE NO. 70097 Taylor B. Pierce Signed ARIZONA, U.S.A. Expires 12/31/28

PREPARED BY: PACE
DESIGNED BY: NE
DRAWN BY: DS, WW
CHECKED BY: TP
SCALE: AS NOTED
DATE: NOV 2025
JOB NO.: B614

TITLE: DEMOLITION PLAN PH-II

JOB: TOWN OF JEROME WASTEWATER TREATMENT PLANT — YAVAPAI CO. AZ

100% ISSUED FOR BID

PREPARED BY: TAYLOR B. PIERCE R.C.E 70097 DATE

PACE
Advanced Water Engineering
8723 E. VIA DE COMMERCIO, BLDG. 1, SCOTTSDALE, CA 85258
P.: (480) 991-3595 | www.paceaztr.com

SHEET
M1.2
28 OF 99 SHEETS

JOB NO. B614

W:\B614\Engineering\B614-30sheets\B614 - M1.2 DEMO PLANS PHII.dwg - Tab: M1.2 - by reddington on 03/10/26 at 12:57:22 PM

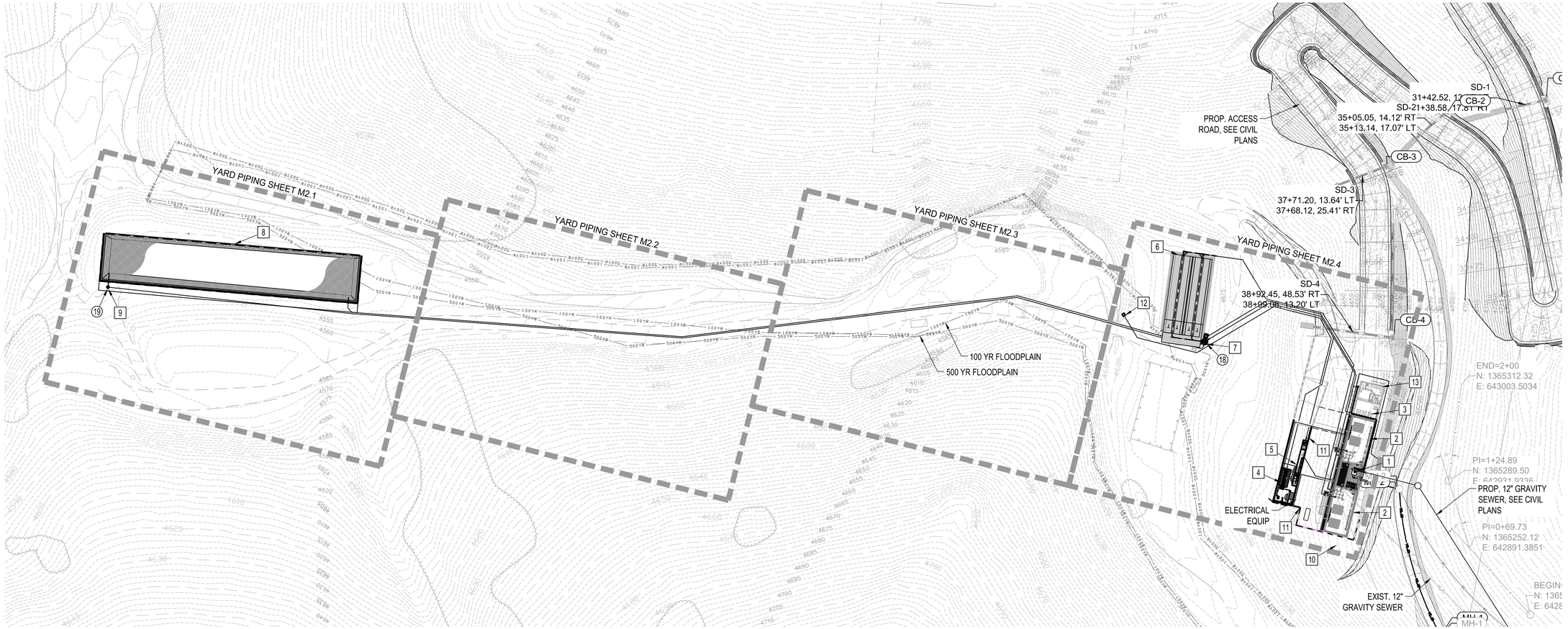

CONSTRUCTION NOTES:

1. HEADWORKS PER SHEET M3.0.
2. SEQUENCING BATCH REACTOR PER SHEET M3.0.
3. BLOWER ROOM PER SHEET M7.0.
4. DEWATERING PAD PER SHEET M5.3.
5. CHLORINE CONTACT CHANNEL PER SHEET M4.0.
6. SLUDGE DRYING BED PER SHEET M5.0.
7. DRYING BED LIFT STATION PER SHEET M5.2.
8. EMERGENCY OVERFLOW BASIN PER SHEET M6.0.
9. PACKAGED OVERFLOW LIFT STATION PER DETAIL A SHEET M8.2.
10. REPLACE 140± LF OF PERIMETER FENCING TO MATCH.
11. RETAINING WALL PER STRUCTURAL SHEET S2.10.
12. PRECAST CONCRETE EFFLUENT SAMPLE BOX PER SHEET M5.0.
13. OPERATIONS ROOM PER SHEET M7.0.

PROPOSED SITE PLAN

NORTH

40 20 0 40 80

100% ISSUED FOR BID

CALL TWO WORKING DAYS BEFORE YOU DIG
602-263-1100
1-800-STAKE-IT
(OUTSIDE MARICOPA COUNTY)

NO	BY	DATE	REVISIONS	DATE	APP.

Registered Professional Engineer (Civil) CERTIFICATE NO. 70097 Taylor B. Pierce Signed ARIZONA, U.S.A. Expires 12/31/28

THESE DRAWINGS ARE THE PROPERTY OF P.A.C.E. AND SHALL NOT BE REPRODUCED IN ANY MANNER NOR BE USED FOR CONSTRUCTION UNLESS STAMPED 'ISSUED FOR CONSTRUCTION'.

PREPARED BY: PACE
DESIGNED BY: NE
DRAWN BY: DS, WW
CHECKED BY: TP
SCALE: AS NOTED
DATE: NOV 2025
JOB NO.: B614

TITLE: **PROPOSED SITE PLAN**

JOB: TOWN OF JEROME WASTEWATER TREATMENT PLANT
YAVAPAI CO. AZ

PACE
Advanced Water Engineering
8123 E. VIA DE COMMERCIO, 1ST FLOOR | SCOTTSDALE, CA 85258
P: (480) 991-3595 | W: www.pacewater.com

PREPARED BY: TAYLOR B. PIERCE R.C.E. 70097 DATE

SHEET **M2.0**
29 OF 99 SHEETS

JOB NO. B614

W:\B614\Engineering\B614-33\sheets\B614 - M2.0 SITE PLANS.dwg - Tab: SITE PLAN - by reddington on 03/10/26 at 2:18:11 PM

CONSTRUCTION NOTES:

1. INSTALL 2" SCH. 80 PVC PIPE.
2. INSTALL 4" C900 PVC PIPE.
3. INSTALL 4" - 45° D.I. BEND W/ MJ CONNECTIONS W/ THRUST BLOCKS PER DETAIL C SHEET M8.0.
4. REPLACE 10± LF OF PERIMETER FENCING TO MATCH.
5. INSTALL 2" PVC COUPLING.
6. TRENCH AND BACKFILL PER DETAIL D, SHEET M8.1.
7. CONTRACTOR TO PROVIDE FITTINGS AS REQUIRED TO CONNECT TO LIFT STATION DISCHARGE PIPING

EARTHWORK ESTIMATE (UNADJUSTED)

CUT	1,465	Cu. Yd.
FILL	0	Cu. Yd.
NET	1,465	Cu. Yd. <CUT>

CONTRACTOR SHALL VERIFY EARTHWORK QUANTITIES

POINT TABLE			
PNT. #	NORTHING	EASTING	DESCRIPTION
1	1366308.34	642657.44	OF BSN BTM CNR
2	1366131.64	642724.07	OF BSN BTM CNR
3	1366299.09	642632.53	OF BSN BTM CNR
4	1366121.64	642697.12	OF BSN BTM CNR
5	1366295.09	642622.30	LS CTR

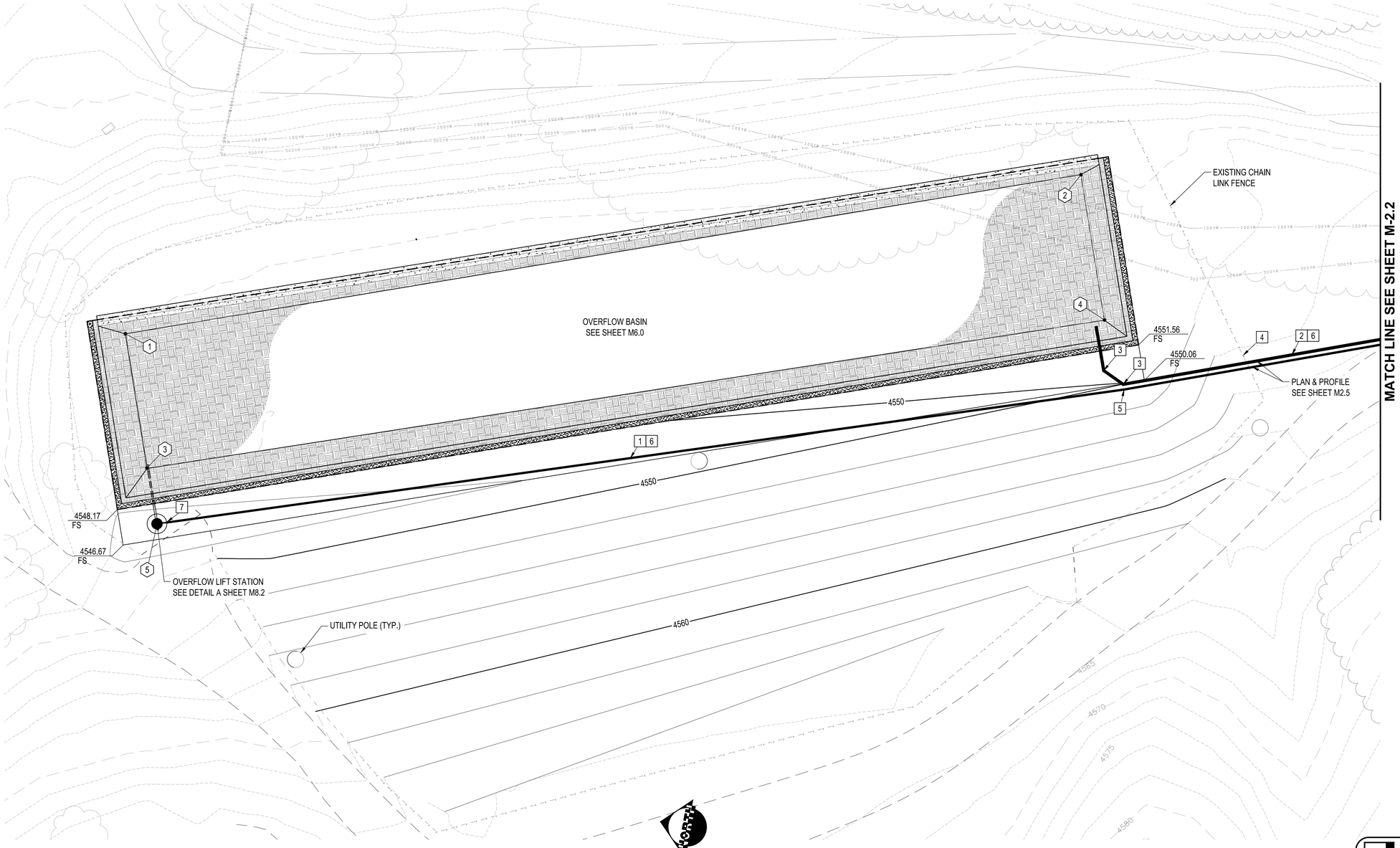

YARD PIPING & GRADING PLAN
SCALE: 1" = 10'

CALL TWO WORKING DAYS BEFORE YOU DIG
602-263-1100
1-800-STAKE-IT
(OUTSIDE MARICOPA COUNTY)

100% ISSUED FOR BID

NO	BY	DATE	REVISIONS	DATE	APP.

Registered Professional Engineer (Civil) CERTIFICATE NO. 70097 TAYLOR B. PIERCE Signed ARIZONA, U.S.A. Expires 12/31/28

THESE DRAWINGS ARE THE PROPERTY OF P.A.C.E. AND SHALL NOT BE REPRODUCED IN ANY MANNER NOR BE USED FOR CONSTRUCTION UNLESS STAMPED 'ISSUED FOR CONSTRUCTION'.

PREPARED BY: PACE
DESIGNED BY: NE
DRAWN BY: DS, WW
CHECKED BY: TP
SCALE: AS NOTED
DATE: NOV 2025
JOB NO.: B614

TITLE: YARD PIPING & GRADING PLAN

JOB: TOWN OF JEROME WASTEWATER TREATMENT PLANT
YAVAPAI CO. AZ

PREPARED BY: TAYLOR B. PIERCE R.C.E. 70097 DATE
PACE
Advanced Water Engineering
8723 E. Via de Ventura, Suite 110, SCOTTSDALE, CA 85258
P: (480) 991-3595 | www.pacewater.com

SHEET M2.1
30 OF 99 SHEETS

JOB NO. B614

W:\B614 Engineering\B614-30\sheets\B614 - M2.1 YARD PIPING - OLD VERSION RESTORED.dwg - Tab: M2.1 - by reddington on 03/10/26 at 2:03:53 PM

CONSTRUCTION NOTES:

1. INSTALL 2" SCH. 80 PVC PIPE.
2. INSTALL 2" - 11.25° SCH. 80 PVC BEND.
3. INSTALL 4" C900 PVC PIPE.
4. INSTALL 4" - 11.25° D.I. BEND W/ MJ CONNECTIONS W/ THRUST BLOCKS PER DETAIL C SHEET M8.0.
5. TRENCH AND BACKFILL PER DETAIL D, SHEET M8.1.

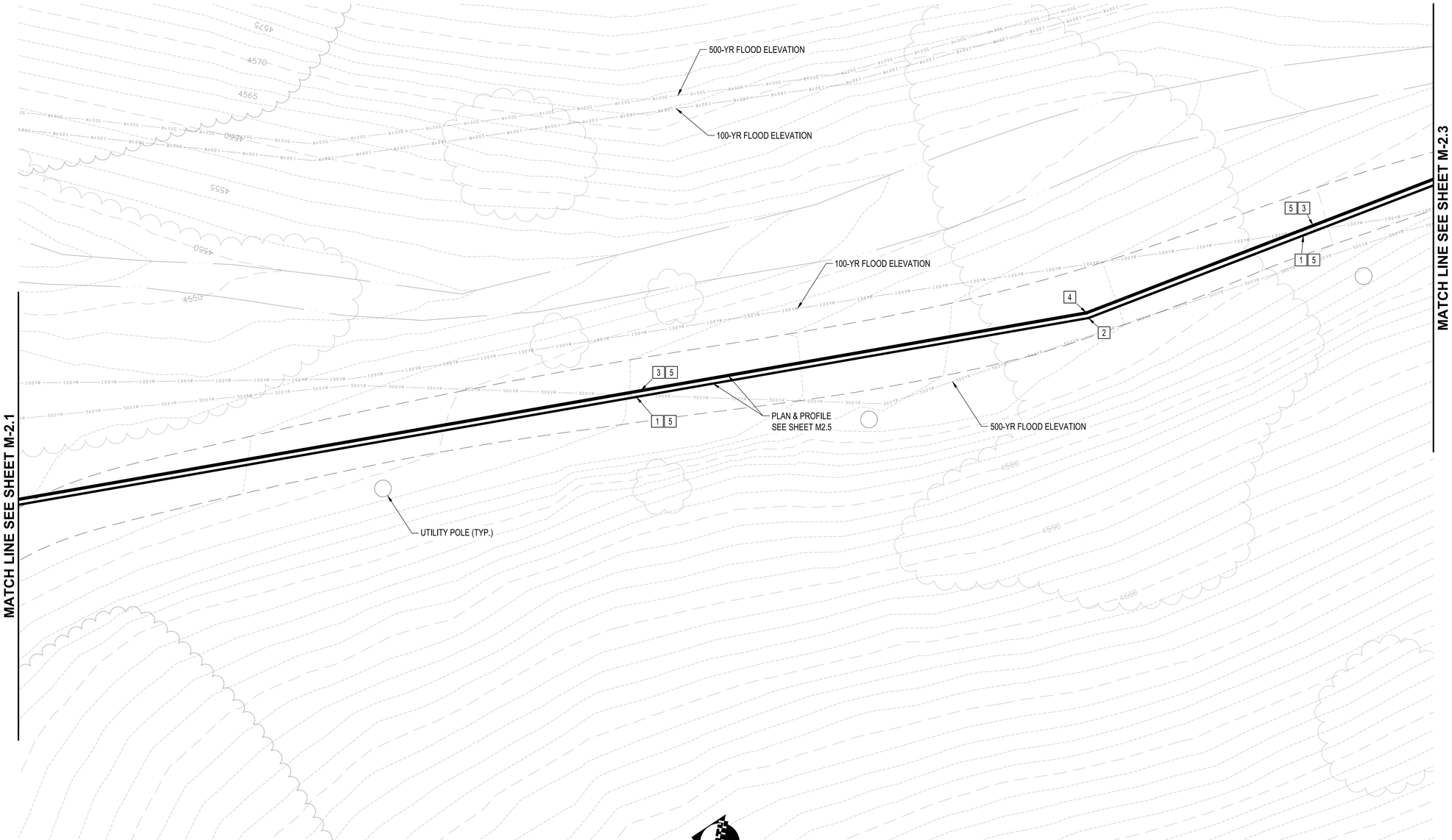

YARD PIPING PLAN
SCALE: 1" = 10'

NORTH
10 5 0 10 20

CALL TWO WORKING DAYS BEFORE YOU DIG
602-263-1100
1-800-STAKE-IT
(OUTSIDE MARICOPA COUNTY)

100% ISSUED FOR BID

NO	BY	DATE	REVISIONS	DATE	APP.

Registered Professional Engineer (Civil)
CERTIFICATE NO. 70097
TAYLOR B. PIERCE
ARIZONA, U.S.A.
Signed
Expires 12/31/28

PREPARED BY: PACE
DESIGNED BY: NE
DRAWN BY: DS, WW
CHECKED BY: TP
SCALE: AS NOTED
DATE: NOV 2025
JOB NO. B614

THESE DRAWINGS ARE THE PROPERTY OF P.A.C.E. AND SHALL NOT BE REPRODUCED IN ANY MANNER NOR BE USED FOR CONSTRUCTION UNLESS STAMPED 'ISSUED FOR CONSTRUCTION'.

TITLE
YARD PIPING PLAN

JOB
TOWN OF JEROME
WASTEWATER
TREATMENT PLANT
YAVAPAI CO. AZ

PREPARED BY:
PACE
Advanced Water Engineering
8723 E. Via de Commercio, Suite 100, SCOTTSDALE, CA 85258
P: (480) 991-3595 | www.pacewater.com
TAYLOR B. PIERCE R.C.E 70097 DATE

SHEET
M2.2
31 OF 99 SHEETS

JOB NO. B614

W:\B614\Engineering\B614-30\sheets\B614 - M2.1 YARD PIPING - OLD VERSION RESTORED.dwg - Tab: M2.2 - by reddington on 03/10/26 at 2:05:53 PM

CONSTRUCTION NOTES:

1. INSTALL 2" SCH. 80 PVC PIPE.
2. INSTALL 2" - 22.5° SCH. 80 PVC BEND.
3. INSTALL 4" D.I. PIPE.
4. INSTALL 4" C900 PVC PIPE.
5. INSTALL 4" - 22.5° D.I. BEND W/ MJ FITTINGS W/ THRUST BLOCKS PER DETAIL C SHEET M8.0.
6. INSTALL CLEANOUT PER DETAIL I SHEET M8.3.
7. INSTALL PVC TO DIP TRANSITION COUPLING, ROMAC OR EQUAL.
8. TRENCH AND BACKFILL PER DETAIL D, SHEET M8.1.

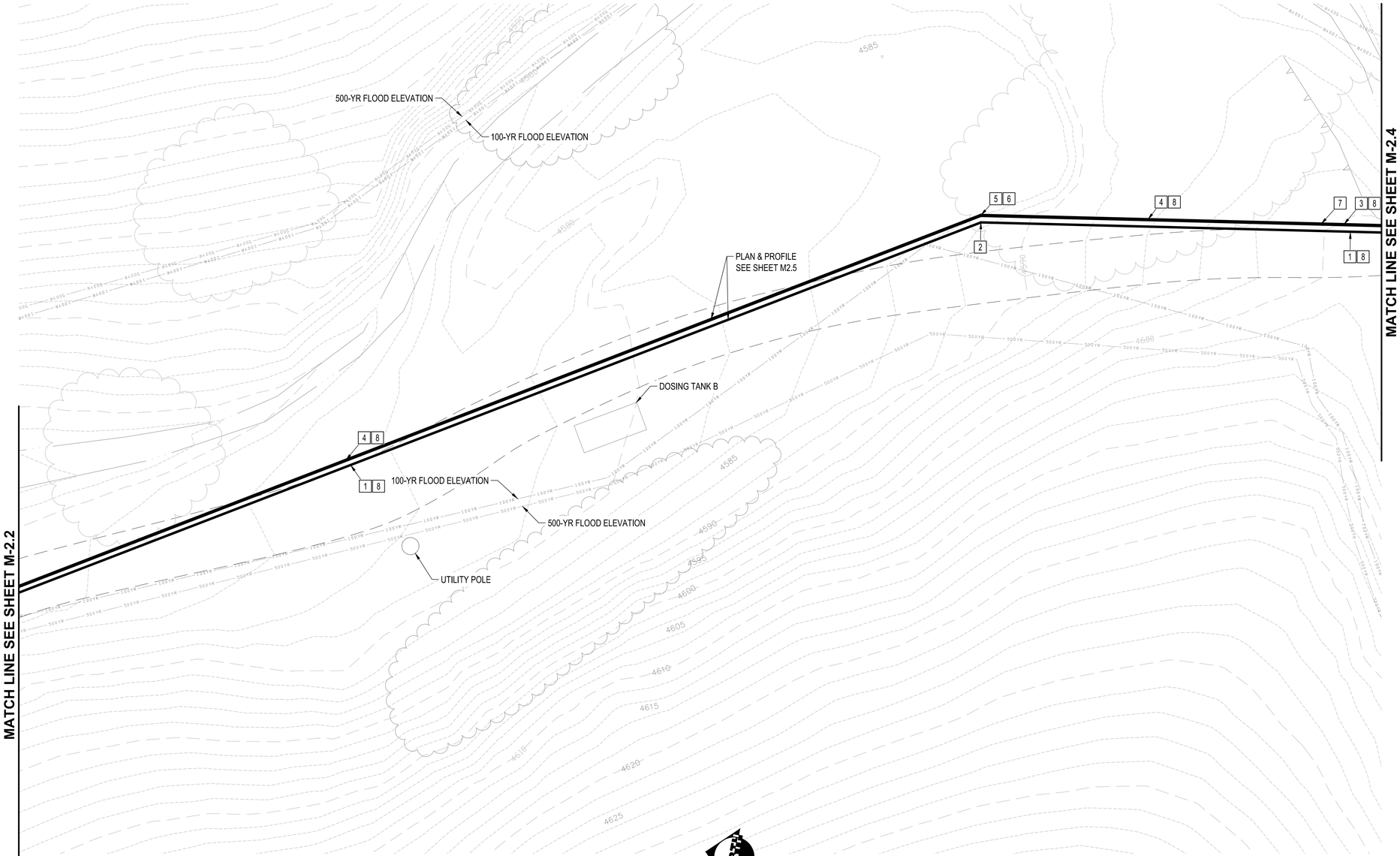

YARD PIPING PLAN
SCALE: 1" = 10'

NORTH
10 5 0 10 20

NO	BY	DATE	REVISIONS	DATE	APP.

THESE DRAWINGS ARE THE PROPERTY OF P.A.C.E. AND SHALL NOT BE REPRODUCED IN ANY MANNER NOR BE USED FOR CONSTRUCTION UNLESS STAMPED 'ISSUED FOR CONSTRUCTION'.

Registered Professional Engineer (Civil) CERTIFICATE NO. 70097 TAYLOR B. PIERCE Signed ARIZONA, U.S.A. Expires 12/31/28

PREPARED BY: PACE
DESIGNED BY: NE
DRAWN BY: DS, WW
CHECKED BY: TP
SCALE: AS NOTED
DATE: NOV 2025
JOB NO.: B614

TITLE: YARD PIPING

JOB: TOWN OF JEROME WASTEWATER TREATMENT PLANT
YAVAPAI CO. AZ

100% ISSUED FOR BID

PREPARED BY:
PACE
Advanced Water Engineering
8723 E. VIA de COMMERCIO, 1ST FLOOR, SCOTTSDALE, CA 85258
P: (480) 991-3595 | www.jacowater.com
TAYLOR B. PIERCE R.C.E. 70097 DATE

SHEET M2.3
32 OF 99 SHEETS

JOB NO. B614

W:\B614\Engineering\B614-3\Sheets\B614 - M2.1 YARD PIPING - OLD VERSION RESTORED.dwg - Tab: M2.3 - by reddington on 03/10/26 at 2:03:53 PM

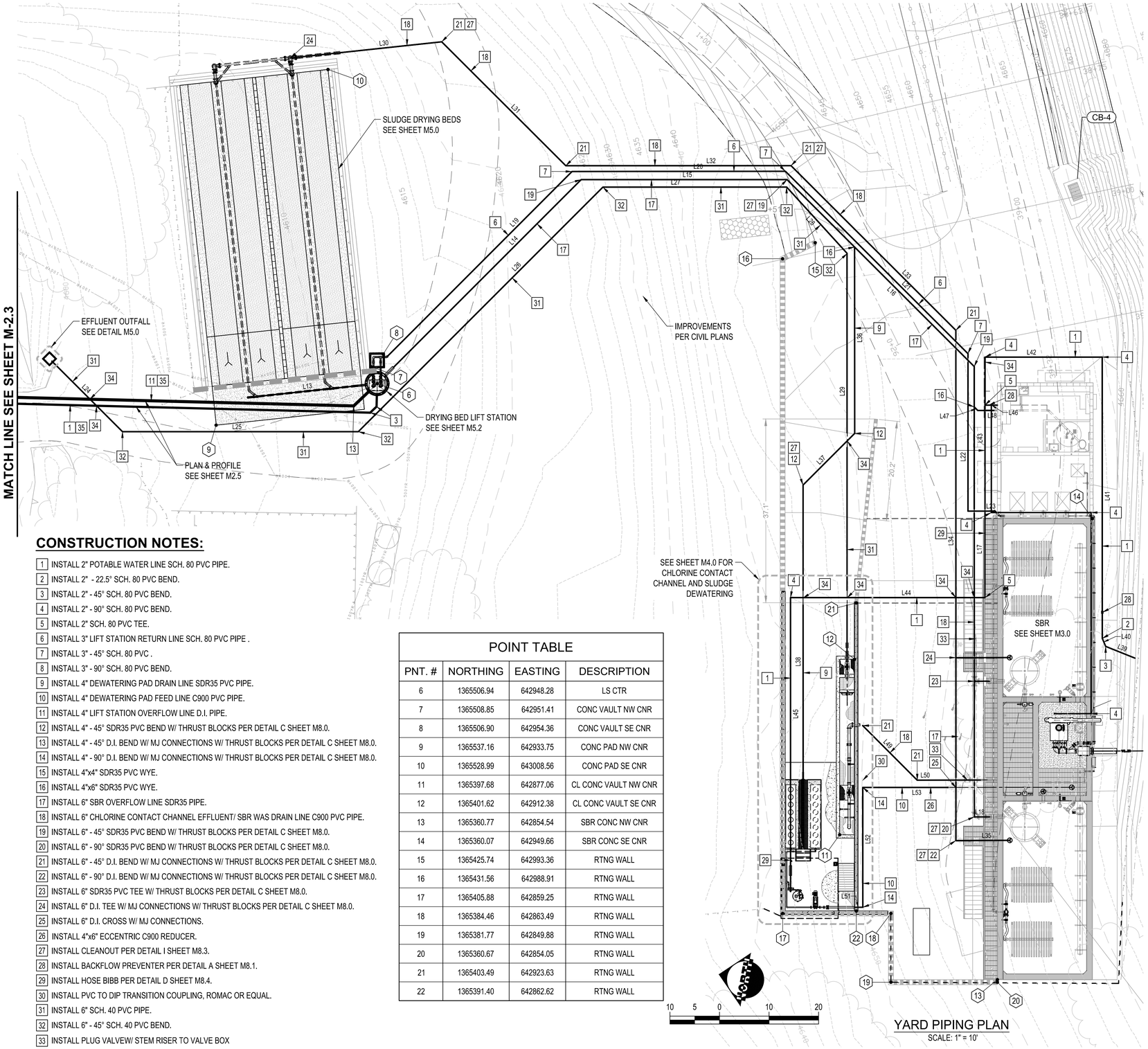

YARD PIPING PLAN
SCALE: 1" = 10'

CONSTRUCTION NOTES:

1. INSTALL 2" POTABLE WATER LINE SCH. 80 PVC PIPE.
2. INSTALL 2" - 22.5° SCH. 80 PVC BEND.
3. INSTALL 2" - 45° SCH. 80 PVC BEND.
4. INSTALL 2" - 90° SCH. 80 PVC BEND.
5. INSTALL 2" SCH. 80 PVC TEE.
6. INSTALL 3" LIFT STATION RETURN LINE SCH. 80 PVC PIPE .
7. INSTALL 3" - 45° SCH. 80 PVC .
8. INSTALL 3" - 90° SCH. 80 PVC BEND.
9. INSTALL 4" DEWATERING PAD DRAIN LINE SDR35 PVC PIPE.
10. INSTALL 4" DEWATERING PAD FEED LINE C900 PVC PIPE.
11. INSTALL 4" LIFT STATION OVERFLOW LINE D.I. PIPE.
12. INSTALL 4" - 45° SDR35 PVC BEND W/ THRUST BLOCKS PER DETAIL C SHEET M8.0.
13. INSTALL 4" - 45° D.I. BEND W/ MJ CONNECTIONS W/ THRUST BLOCKS PER DETAIL C SHEET M8.0.
14. INSTALL 4" - 90° D.I. BEND W/ MJ CONNECTIONS W/ THRUST BLOCKS PER DETAIL C SHEET M8.0.
15. INSTALL 4"x4" SDR35 PVC WYE.
16. INSTALL 4"x6" SDR35 PVC WYE.
17. INSTALL 6" SBR OVERFLOW LINE SDR35 PIPE.
18. INSTALL 6" CHLORINE CONTACT CHANNEL EFFLUENT/ SBR WAS DRAIN LINE C900 PVC PIPE.
19. INSTALL 6" - 45° SDR35 PVC BEND W/ THRUST BLOCKS PER DETAIL C SHEET M8.0.
20. INSTALL 6" - 90° SDR35 PVC BEND W/ THRUST BLOCKS PER DETAIL C SHEET M8.0.
21. INSTALL 6" - 45° D.I. BEND W/ MJ CONNECTIONS W/ THRUST BLOCKS PER DETAIL C SHEET M8.0.
22. INSTALL 6" - 90° D.I. BEND W/ MJ CONNECTIONS W/ THRUST BLOCKS PER DETAIL C SHEET M8.0.
23. INSTALL 6" SDR35 PVC TEE W/ THRUST BLOCKS PER DETAIL C SHEET M8.0.
24. INSTALL 6" D.I. TEE W/ MJ CONNECTIONS W/ THRUST BLOCKS PER DETAIL C SHEET M8.0.
25. INSTALL 6" D.I. CROSS W/ MJ CONNECTIONS.
26. INSTALL 4"x6" ECCENTRIC C900 REDUCER.
27. INSTALL CLEANOUT PER DETAIL I SHEET M8.3.
28. INSTALL BACKFLOW PREVENTER PER DETAIL A SHEET M8.1.
29. INSTALL HOSE BIBB PER DETAIL D SHEET M8.4.
30. INSTALL PVC TO DIP TRANSITION COUPLING, ROMAC OR EQUAL.
31. INSTALL 6" SCH. 40 PVC PIPE.
32. INSTALL 6" - 45° SCH. 40 PVC BEND.
33. INSTALL PLUG VALVEW/ STEM RISER TO VALVE BOX
34. POTABLE WATER & SEWER SEPERATION PER DETAIL F SHEET M8.3
35. TRENCH AND BACKFILL PER DETAIL D, SHEET M8.1.

POINT TABLE

PNT. #	NORTHING	EASTING	DESCRIPTION
6	1365506.94	642948.28	LS CTR
7	1365508.85	642951.41	CONC VAULT NW CNR
8	1365506.90	642954.36	CONC VAULT SE CNR
9	1365537.16	642933.75	CONC PAD NW CNR
10	1365528.99	643008.56	CONC PAD SE CNR
11	1365397.68	642877.06	CL CONC VAULT NW CNR
12	1365401.62	642912.38	CL CONC VAULT SE CNR
13	1365360.77	642854.54	SBR CONC NW CNR
14	1365360.07	642949.66	SBR CONC SE CNR
15	1365425.74	642993.36	RTNG WALL
16	1365431.56	642988.91	RTNG WALL
17	1365405.88	642859.25	RTNG WALL
18	1365384.46	642863.49	RTNG WALL
19	1365381.77	642849.88	RTNG WALL
20	1365360.67	642854.05	RTNG WALL
21	1365403.49	642923.63	RTNG WALL
22	1365391.40	642862.62	RTNG WALL

LINE DATA

LINE #	DISTANCE	BEARING	START POINT	END POINT
L13	22.48'	S17°18'33"E	N 1365530.33, E 642940.99	N 1365508.86, E 642947.68
L14	56.23'	S56°12'23"E	N 1365505.83, E 642949.94	N 1365474.55, E 642996.68
L15	41.55'	S11°12'16"E	N 1365474.55, E 642996.68	N 1365433.79, E 643004.75
L16	53.40'	S33°46'31"W	N 1365433.79, E 643004.75	N 1365389.40, E 642975.07
L17	90.91'	S78°47'08"W	N 1365389.40, E 642975.07	N 1365371.72, E 642885.90
L18	3.06'	S11°12'16"E	N 1365371.72, E 642885.90	N 1365368.72, E 642886.49
L19	52.66'	S56°14'49"E	N 1365505.95, E 642954.14	N 1365476.69, E 642997.93
L20	43.07'	S11°14'49"E	N 1365476.69, E 642997.93	N 1365434.44, E 643006.33
L21	52.08'	S33°46'38"W	N 1365434.44, E 643006.33	N 1365391.15, E 642977.37
L22	31.78'	S78°47'08"W	N 1365391.15, E 642977.37	N 1365384.97, E 642946.20
L23	5.63'	S11°12'52"E	N 1365384.97, E 642946.20	N 1365379.45, E 642947.29
L24	19.82'	S33°47'52"W	N 1365571.96, E 642939.80	N 1365555.49, E 642928.78
L25	47.61'	S11°12'09"E	N 1365555.49, E 642928.78	N 1365508.79, E 642938.03
L26	69.82'	S56°12'21"E	N 1365508.79, E 642938.03	N 1365469.95, E 642996.05
L27	37.08'	S11°11'56"E	N 1365469.95, E 642996.05	N 1365433.58, E 643003.25
L28	18.14'	S36°24'57"W	N 1365433.58, E 643003.25	N 1365418.98, E 642992.48
L29	91.27'	S78°48'35"W	N 1365418.98, E 642992.48	N 1365401.27, E 642902.95
L30	30.72'	S17°17'44"E	N 1365536.89, E 643009.37	N 1365507.56, E 643018.50
L31	35.41'	S33°46'20"W	N 1365507.56, E 643018.50	N 1365478.13, E 642998.82
L32	45.45'	S11°13'40"E	N 1365478.13, E 642998.82	N 1365433.55, E 643007.67
L33	47.02'	S33°47'44"W	N 1365433.55, E 643007.67	N 1365394.47, E 642981.52
L34	103.00'	S78°47'25"W	N 1365394.47, E 642981.52	N 1365374.45, E 642880.48
L35	10.88'	S11°24'18"E	N 1365374.45, E 642880.48	N 1365363.79, E 642882.63
L36	37.61'	N78°47'08"E	N 1365410.46, E 642957.14	N 1365417.77, E 642994.04
L37	14.74'	S56°12'52"E	N 1365418.65, E 642944.90	N 1365410.46, E 642957.14
L38	59.50'	N78°47'08"E	N 1365407.08, E 642886.53	N 1365418.65, E 642944.90
L39	6.37'	S10°40'27"W	N 1365352.41, E 642924.80	N 1365346.15, E 642923.62
L40	1.74'	S55°40'27"W	N 1365353.39, E 642926.23	N 1365352.41, E 642924.80
L41	56.80'	S78°47'44"W	N 1365364.43, E 642981.96	N 1365353.39, E 642926.23
L42	23.67'	S11°12'16"E	N 1365387.65, E 642977.36	N 1365364.43, E 642981.96
L43	48.55'	N78°47'44"E	N 1365378.21, E 642929.73	N 1365387.65, E 642977.36
L44	39.25'	S11°12'16"E	N 1365416.71, E 642922.10	N 1365378.21, E 642929.73
L45	59.28'	N78°47'44"E	N 1365405.19, E 642863.95	N 1365416.71, E 642922.10
L46	2.50'	N11°12'16"W	N 1365383.31, E 642968.33	N 1365385.76, E 642967.84
L47	1.00'	N33°47'44"E	N 1365386.98, E 642966.52	N 1365387.82, E 642967.07
L48	3.25'	N11°11'39"W	N 1365383.80, E 642967.15	N 1365386.98, E 642966.52
L49	15.57'	S33°47'44"W	N 1365397.42, E 642899.59	N 1365384.48, E 642890.93
L50	14.13'	S11°20'19"E	N 1365384.48, E 642890.93	N 1365370.63, E 642893.71
L51	1.67'	S11°12'52"E	N 1365391.90, E 642863.29	N 1365390.26, E 642863.62
L52	24.20'	N78°47'08"E	N 1365390.26, E 642863.62	N 1365394.97, E 642887.36
L53	42.17'	S11°12'24"E	N 1365394.97, E 642887.36	N 1365353.60, E 642895.55

NO	BY	DATE	REVISIONS	DATE	APP.

Registered Professional Engineer (Civil)
CERTIFICATE NO.
Timothy R. Pace
Signed
ARIZONA, U.S.A.
Expires 12/31/28

THESE DRAWINGS ARE THE PROPERTY OF P.A.C.E. AND SHALL NOT BE REPRODUCED IN ANY MANNER NOR BE USED FOR CONSTRUCTION UNLESS STAMPED 'ISSUED FOR CONSTRUCTION'.

PREPARED BY: PACE
DESIGNED BY: NE
DRAWN BY: DS, WW
CHECKED BY: TP
SCALE: AS NOTED
DATE: NOV 2025
JOB NO.: B614

TITLE: YARD PIPING

JOB: TOWN OF JEROME
WASTEWATER
TREATMENT PLANT
YAVAPAI CO. AZ

100% ISSUED FOR BID

PACE
Advanced Water Engineering
8723 E. Via de Commercio, Suite 1A, SCOTTSDALE, CA 85258
P: (480) 991-3595 | www.pacewater.com
R.C.E 70097

PREPARED BY: TAYLOR B. PIERCE DATE

SHEET M2.4
33 OF 99 SHEETS

JOB NO. B614

CALL TWO WORKING DAYS BEFORE YOU DIG
602-263-1100
1-800-STAKE-IT
(OUTSIDE MARICOPA COUNTY)

W:\B614-Engineering\B614-30\sheets\B614 - M2.1 YARD PIPING - OLD VERSION RESTORED.dwg - Tab: M2.4 - by reddington on 03/10/26 at 2:03:53 PM

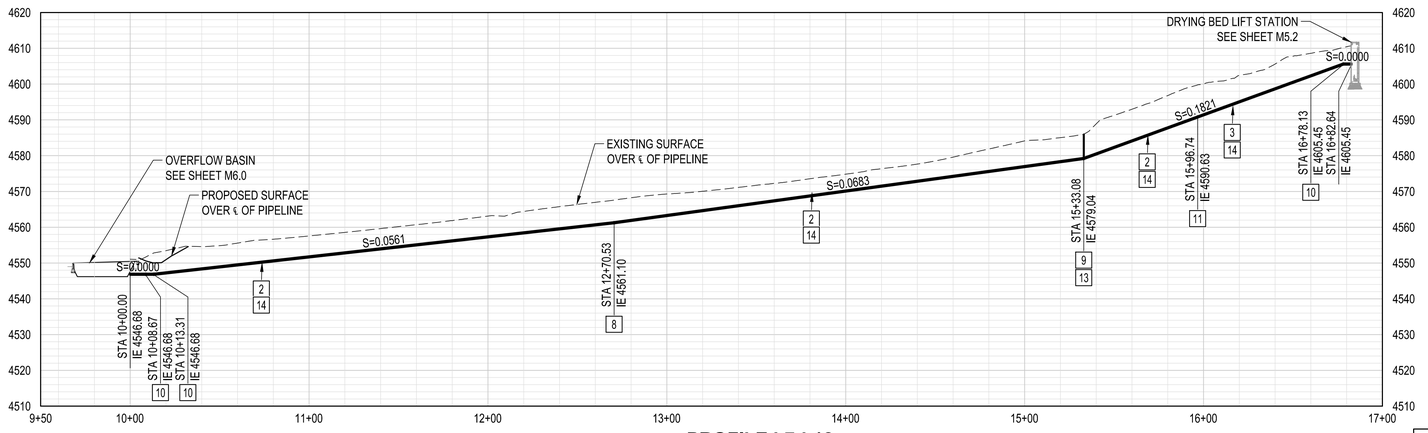

PROFILE L7-L12

SCALE: HORZ: 1" = 40'
VERT: 1" = 20'

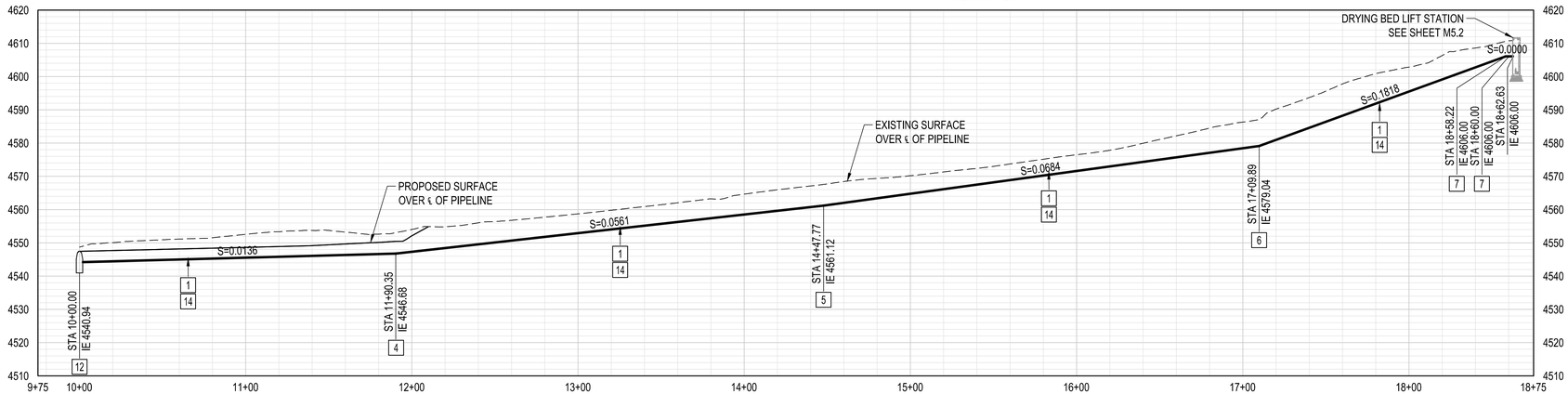

PROFILE L1-L6

SCALE: HORZ: 1" = 40'
VERT: 1" = 20'

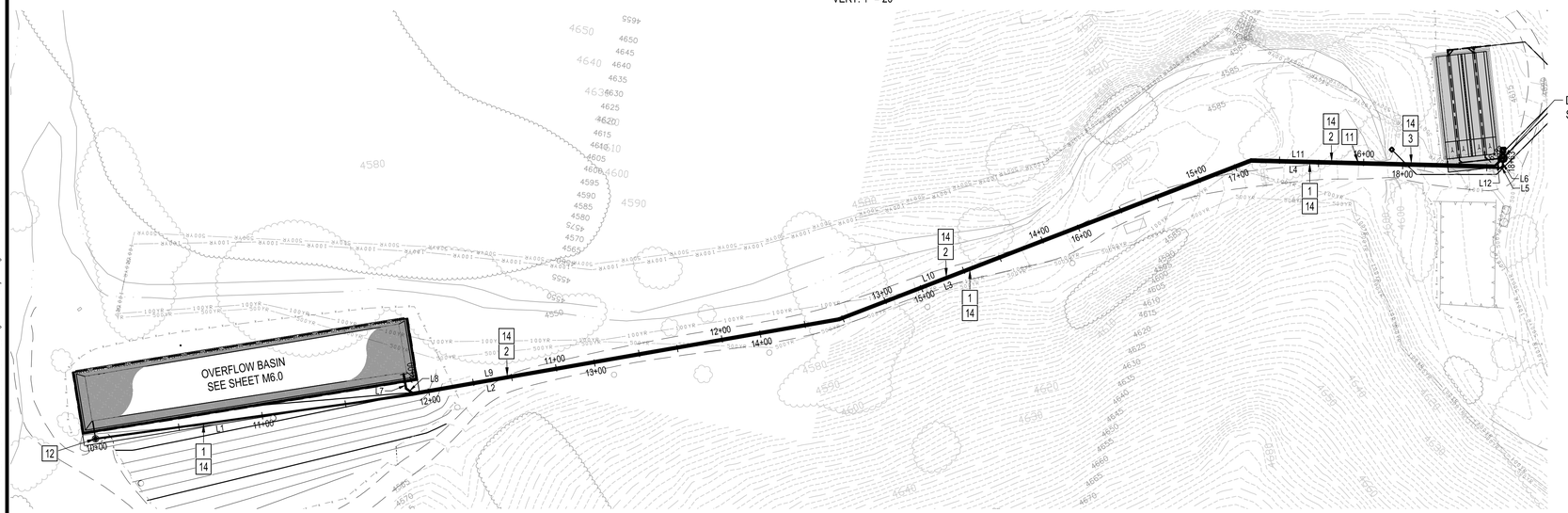

PLAN

SCALE: 1" = 40'

CONSTRUCTION NOTES:

1. INSTALL 2" SCH. 80 PVC PIPE.
2. INSTALL 4" C900 PVC PIPE.
3. INSTALL 4" D.I. PIPE.
4. INSTALL 2" PVC COUPLING.
5. INSTALL 2" - 11.25° SCH. 80 PVC BEND.
6. INSTALL 2" - 22.5° SCH. 80 PVC BEND.
7. INSTALL 2" - 45° SCH. 80 PVC BEND.
8. INSTALL 4" - 11.25° D.I. BEND W/ MJ CONNECTIONS W/ THRUST BLOCKS PER DETAIL C SHEET M8.0.
9. INSTALL 4" - 22.5° D.I. BEND W/ MJ CONNECTIONS W/ THRUST BLOCKS PER DETAIL C SHEET M8.0.
10. INSTALL 4" - 45° D.I. BEND W/ MJ CONNECTIONS W/ THRUST BLOCKS PER DETAIL C SHEET M8.0.
11. INSTALL PVC TO DIP TRANSITION COUPLING, ROMAC OR EQUAL.
12. INSTALL OVERFLOW LIFT STATION PER DETAIL A, SHEET M8.2.
13. INSTALL CLEANOUT PER DETAIL I SHEET M8.3.
14. TRENCH AND BACKFILL PER DETAIL D, SHEET M8.1.

LINE DATA

LINE #	DISTANCE	BEARING	START POINT	END POINT
L1	190.35'	S19°06'20"E	N 1366295.09, E 642622.30	N 1366115.23, E 642684.60
L2	257.42'	S21°06'20"E	N 1366115.23, E 642684.60	N 1365875.07, E 642777.30
L3	262.12'	S32°14'38"E	N 1365875.07, E 642777.30	N 1365653.38, E 642917.15
L4	148.33'	S9°44'37"E	N 1365653.38, E 642917.15	N 1365507.19, E 642942.25
L5	1.78'	S54°44'37"E	N 1365507.19, E 642942.25	N 1365506.16, E 642943.70
L6	2.63'	N80°21'09"E	N 1365506.16, E 642943.70	N 1365506.60, E 642946.29
L7	8.67'	S69°03'53"W	N 1366122.94, E 642695.54	N 1366119.84, E 642687.44
L8	4.64'	S23°54'58"W	N 1366119.84, E 642687.44	N 1366115.60, E 642685.56
L9	257.22'	S21°06'20"E	N 1366115.60, E 642685.56	N 1365875.63, E 642778.18
L10	262.55'	S32°17'02"E	N 1365875.63, E 642778.18	N 1365653.67, E 642918.41
L11	145.05'	S9°44'32"E	N 1365653.67, E 642918.41	N 1365510.71, E 642942.95
L12	4.51'	S54°44'04"E	N 1365510.71, E 642942.95	N 1365508.11, E 642946.64

NO	BY	DATE	REVISIONS	DATE	APP.

Registered Professional Engineer (Civil)
CERTIFICATE NO. 70097
Timothy Pace
Signed
ARIZONA, U.S.A.
Expires 12/31/28

PREPARED BY: PACE
DESIGNED BY: NE
DRAWN BY: DS, WW
CHECKED BY: TP
SCALE: AS NOTED
DATE: NOV 2025
JOB NO. B614

THESE DRAWINGS ARE THE PROPERTY OF P.A.C.E. AND SHALL NOT BE REPRODUCED IN ANY MANNER NOR BE USED FOR CONSTRUCTION UNLESS STAMPED 'ISSUED FOR CONSTRUCTION'.

TITLE
PLAN & PROFILE

JOB
TOWN OF JEROME
WASTEWATER
TREATMENT PLANT
YAVAPAI CO. AZ

100% ISSUED FOR BID

PREPARED BY: TAYLOR B. PIERCE R.C.E 70097 DATE
PACE
Advanced Water Engineering
6723 E. VIA de COMERCIO, SUITE A, SCOTTSDALE, CA 85258
P: (480) 991-3595 | www.pacewater.com

SHEET
M2.5
34 OF 99 SHEETS

JOB NO. B614

NORTH
40 20 0 40 80

CALL TWO WORKING DAYS BEFORE YOU DIG
602-263-1100
1-800-STAKE-IT
(OUTSIDE MARICOPA COUNTY)

W:\B614\Engineering\B614-3\sheets\B614 - M2.1 YARD PIPING - OLD VERSION RESTORED.dwg - Tab: M2.5 - by reddington on 03/10/26 at 2:03:53 PM

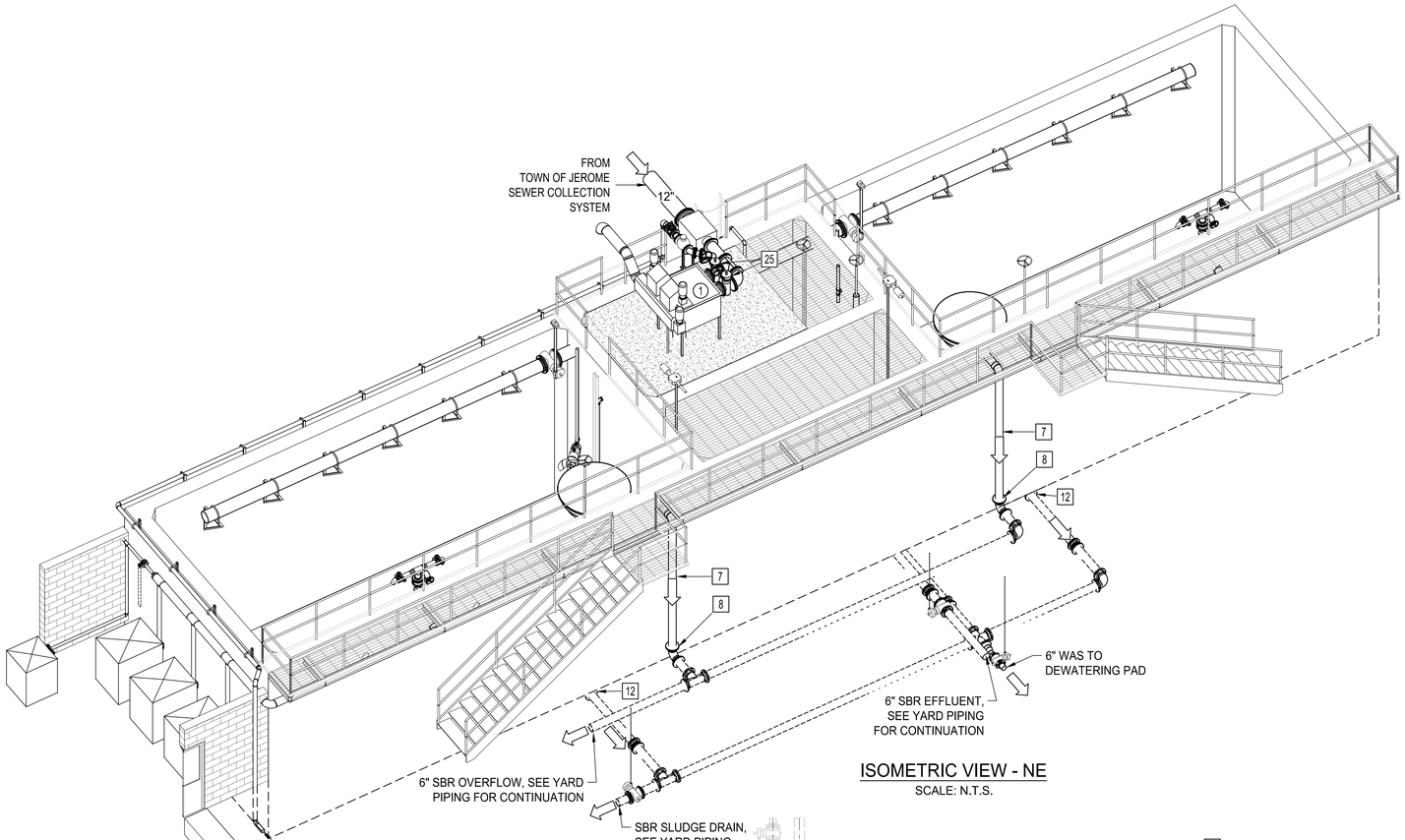

ISOMETRIC VIEW - NE

SCALE: N.T.S.

NOTE:
ROOF AND FOUNDATION SLABS
NOT SHOWN FOR CLARITY.

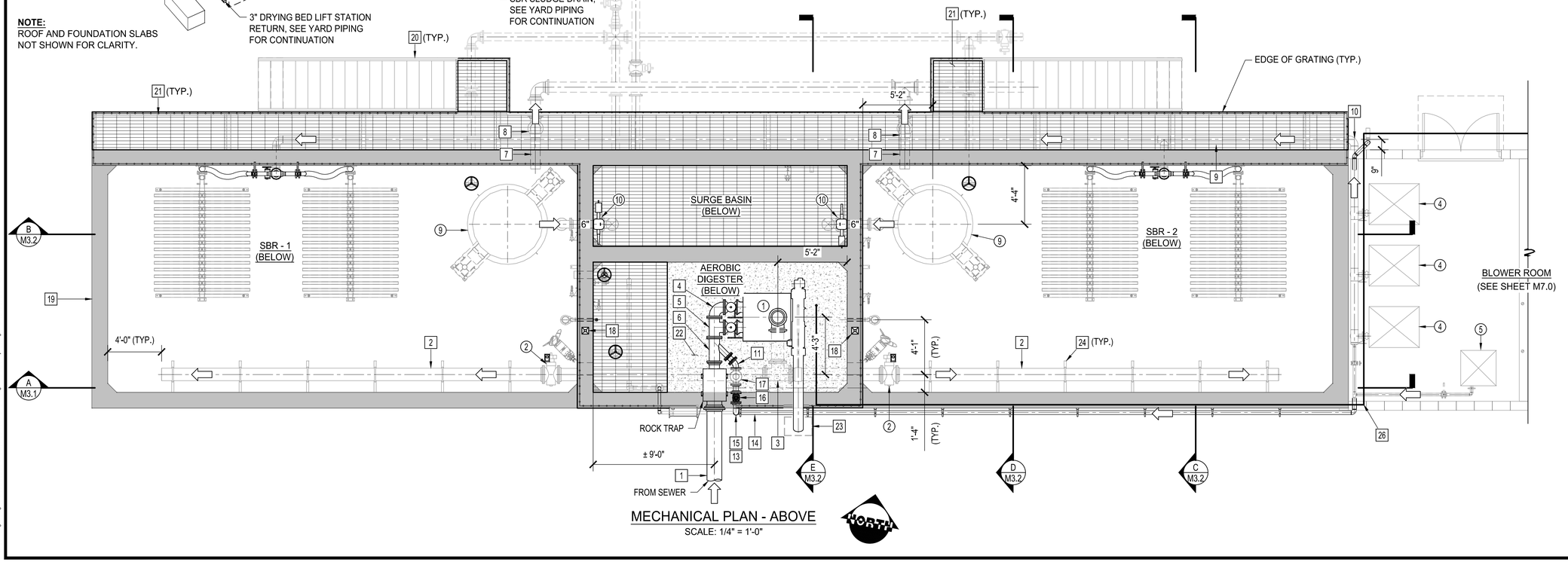

MECHANICAL PLAN - ABOVE

SCALE: 1/4" = 1'-0"

CONSTRUCTION NOTES:

1. INSTALL 12" D.I. PIPE (FLG'D).
2. INSTALL 10" D.I. PIPE (FLG'D).
3. INSTALL 10" D.I. TEE (FLG'D).
4. INSTALL 8" - 90° D.I. BEND (FLG'D).
5. INSTALL 8" D.I. TEE (FLG'D).
6. INSTALL 8"x4" D.I. REDUCING WYE (FLG'D).
7. INSTALL 6" SDR35 PVC PIPE.
8. INSTALL 6" - 90° SDR35 PVC BEND (MJ).
9. INSTALL 6" SCH. 10 CARBON STEEL PIPE.
10. INSTALL 6" - 90° SCH. 10 CARBON STEEL BEND.
11. INSTALL 4" - 45° D.I. BEND (FLG'D).
12. INSTALL 6" - 90° D.I. BEND (MJ).
13. INSTALL 4"x 3" D.I. REDUCER (FLG'D).
14. INSTALL 3" SCH. 80 PVC PIPE.
15. INSTALL 4" - 90° SCH. 80 PVC BEND.
16. INSTALL 4" PVC PLUG VALVE.
17. INSTALL 4" SCH. 80 PVC CHECK VALVE.
18. INSTALL DAVIT CRANE BASE (APPROX. LOCATION).
19. SBR STRUCTURE (SEE STRUCTURAL).
20. STAIRS & RAILING PER MANUFACTURER.
21. GRATING PER MANUFACTURER.
22. CONCRETE SLAB PER STRUCTURAL.
23. WASTE BIN (BY OTHERS).
24. INSTALL PIPE SUPPORTS PER DETAIL A SHT M8.5
25. INSTALL 8" PLUG VALVE, FLG'D.
26. INSTALL 2" SCH. 80 PVC POTABLE WATER

NO	BY	DATE	REVISIONS	DATE	APP.

Registered Professional Engineer (Civil)
CERTIFICATE NO. 70097
Timothy B. Pierce
Signed
ARIZONA, U.S.A.
Expires 12/31/28

PREPARED BY: PACE
DESIGNED BY: NE
DRAWN BY: DS, WW
CHECKED BY: TP
SCALE: AS NOTED
DATE: NOV 2025
JOB NO. B614

THESE DRAWINGS ARE THE PROPERTY OF P.A.C.E. AND SHALL NOT BE REPRODUCED IN ANY MANNER NOR BE USED FOR CONSTRUCTION UNLESS STAMPED 'ISSUED FOR CONSTRUCTION'.

TITLE
SBR MECHANICAL PLAN

JOB
TOWN OF JEROME
WASTEWATER
TREATMENT PLANT
YAVAPAI CO. AZ

100% ISSUED FOR BID

PREPARED BY:
PACE
Advanced Water Engineering
CONSULTANTS, LLC
8723 E. VIA DE VENTURA, SUITE A-200 | SCOTTSDALE, AZ 85258
P: (480) 991-3595 | www.pacewater.com
TAYLOR B. PIERCE R.C.E. 70097 DATE

SHEET
M3.0
35 OF 99 SHEETS

JOB NO. B614

W:\B614\Engineering\B614-3\Sheets\B614 - M3.0 MECHANICAL PLAN.dwg - Tab: M3.0 - by neddington on 02/19/26 at 9:31:42 AM

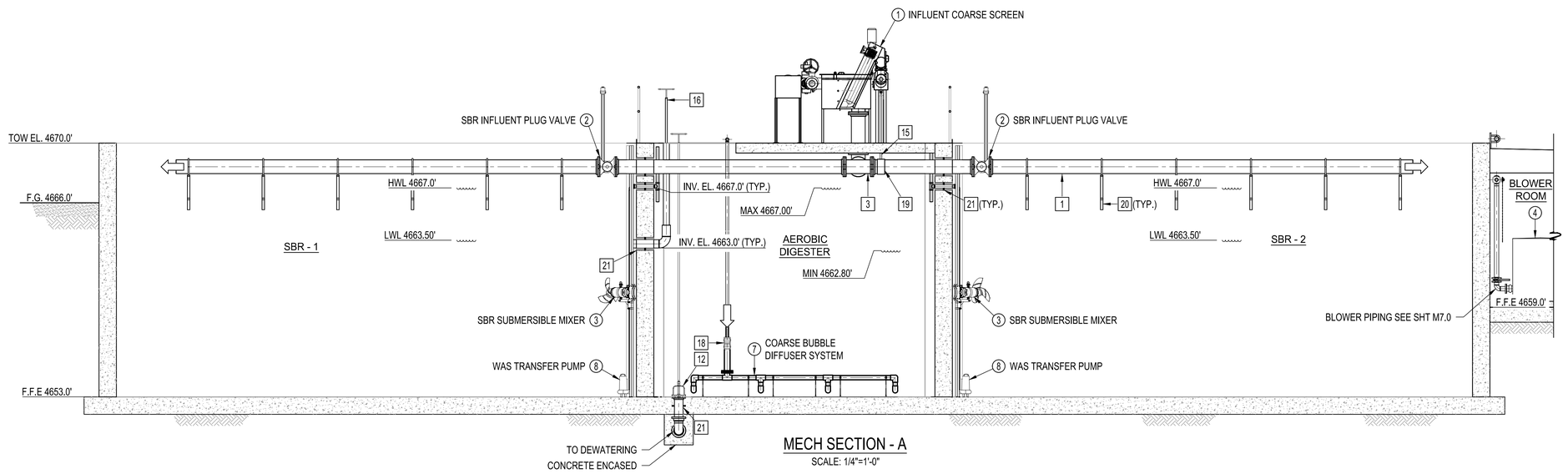

MECH SECTION - A

SCALE: 1/4"=1'-0"

CONSTRUCTION NOTES:

1. INSTALL 10" INFLUENT D.I. PIPE (FLG'D).
2. INSTALL 10" - 90° D.I. BEND (FLG'D).
3. INSTALL 10" D.I. TEE (FLG'D).
4. INSTALL 6" x 4" PVC REDUCER.
5. INSTALL 6" SDR35 PVC PIPE.
6. INSTALL 6" - 90° SDR35 PVC BEND (MJ).
7. INSTALL 6" C900 PVC PIPE.
8. INSTALL 6" - 90° D.I. BEND (MJ).
9. INSTALL 6" C900 PVC CROSS (MJ).
10. INSTALL 6" C900 PVC TEE (MJ).
11. INSTALL 3" SCH. 80 PVC PIPE.
12. INSTALL MUD VALVE w/ STEM RISER (SIZE PER PLAN).
13. SBR STRUCTURE (SEE S2.0).
14. INSTALL 2' x 2' SUMP PER STRUCTURAL PLANS.
15. INSTALL 1" DRAIN LINE FROM SCREEN.
16. INSTALL 6" TELESCOPING VALVE W/ HANDWHEEL.
17. INSTALL 6" BUTTERFLY VALVE W/ ACTUATOR (VENDOR PROVIDED).
18. INSTALL 2"x4" SS TO PVC CONCENTRIC REDUCER (SEE SECTION - A)
19. INSTALL TAP PER PLAN.
20. INSTALL PIPE SUPPORTS PER DETAIL A ON SHEET M8.5.
21. PIPE PENETRATION PER DETAIL G ON SHEET M8.4
22. INSTALL 6" PLUG VALVE.
23. INSTALL 4" PLUG VALVE.
24. INSTALL 6" SCH. 10 CARBON STEEL 90 DEG BEND.
25. INSTALL 6" SCH. 10 CARBON STEEL TEE.
26. INSTALL 6" SCH. 10 CARBON STEEL PIPE.

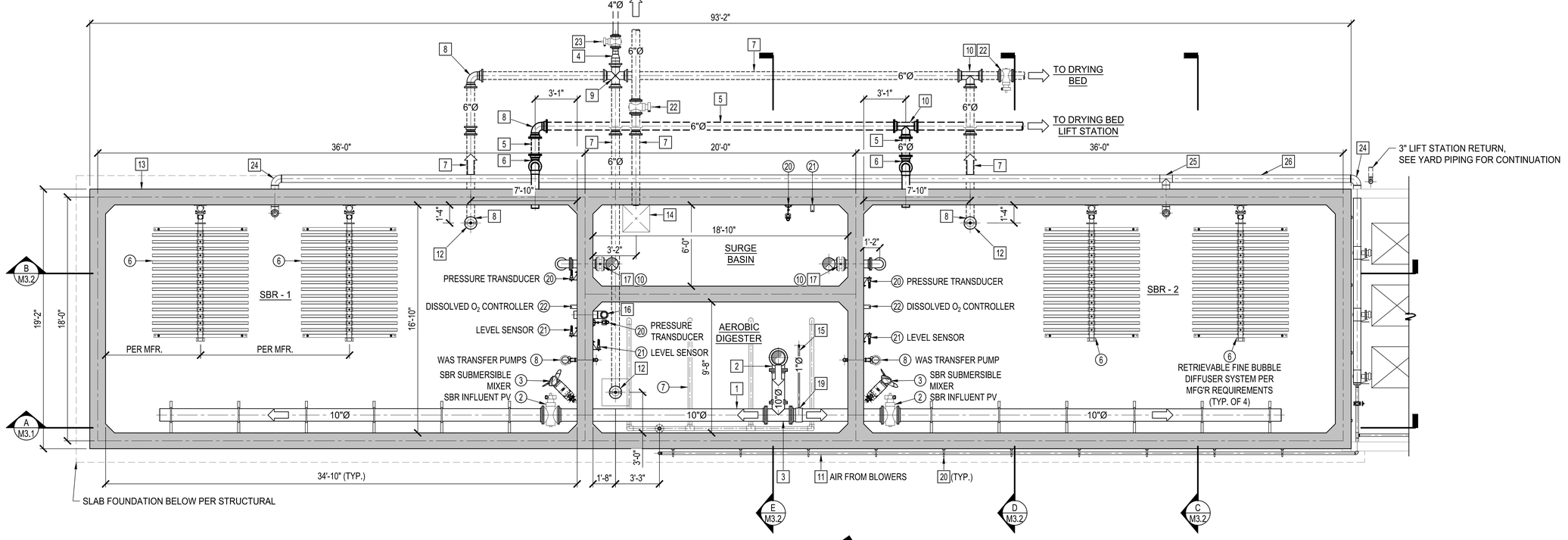

MECHANICAL PLAN - BELOW

SCALE: 1/4" = 1'-0"

NO	BY	DATE	REVISIONS	DATE	APP.

Registered Professional Engineer (Civil) CERTIFICATE NO. 70097 Timothy B. Pierce Signed ARIZONA, U.S.A. Expires 12/31/28

THESE DRAWINGS ARE THE PROPERTY OF P.A.C.E. AND SHALL NOT BE REPRODUCED IN ANY MANNER NOR BE USED FOR CONSTRUCTION UNLESS STAMPED 'ISSUED FOR CONSTRUCTION'.

PREPARED BY: PACE
DESIGNED BY: NE
DRAWN BY: DS, WW
CHECKED BY: TP
SCALE: AS NOTED
DATE: NOV 2025
JOB NO.: B614

TITLE: **SBR MECHANICAL PLAN**

JOB: TOWN OF JEROME WASTEWATER TREATMENT PLANT — YAVAPAI CO. AZ

100% ISSUED FOR BID

PREPARED BY: TAYLOR B. PIERCE — R.C.E 70097 — DATE

PACE
Advanced Water Engineering
8723 E. Via de Commercio, Suite 1 | Scottsdale, CA 85258
P: (480) 991-3995 | www.pacewater.com

SHEET **M3.1**
36 OF 99 SHEETS

JOB NO. B614

W:\B614\Engineering\B614-30\sheets\B614 - M3.0 MECHANICAL PLAN.dwg - Tab: M3.1 - by reddington on 02/19/26 at 9:31:42 AM

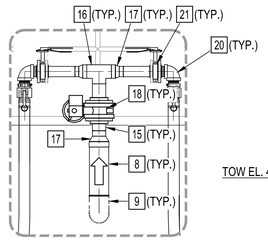

DETAIL - A
SCALE: 1/2"=1'-0"

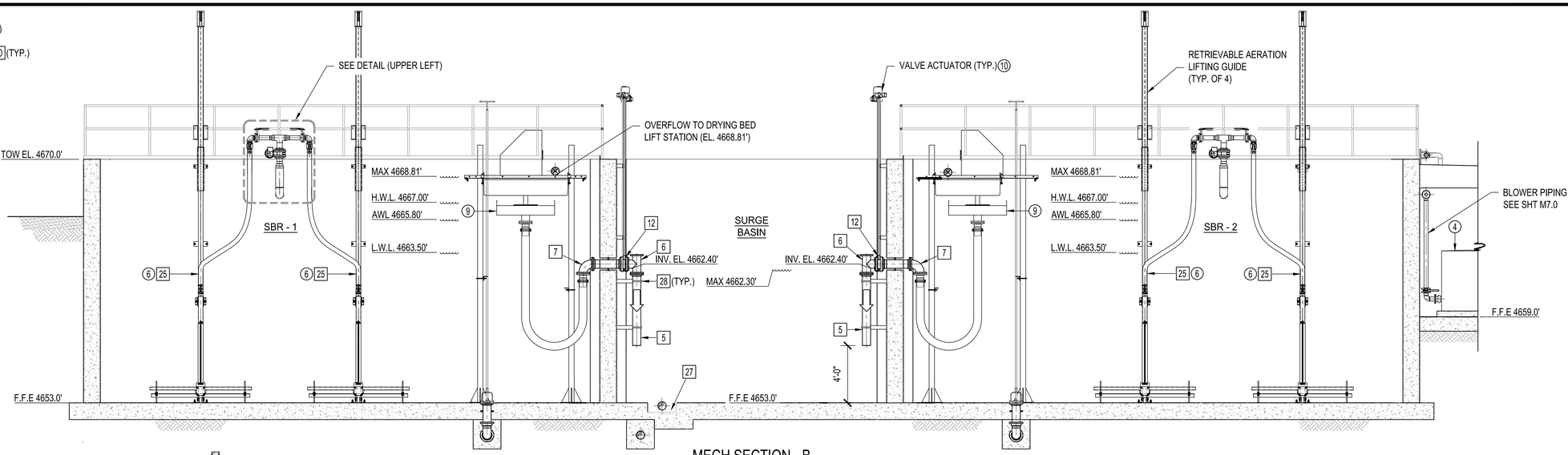

MECH SECTION - B
SCALE: 1/4"=1'-0"

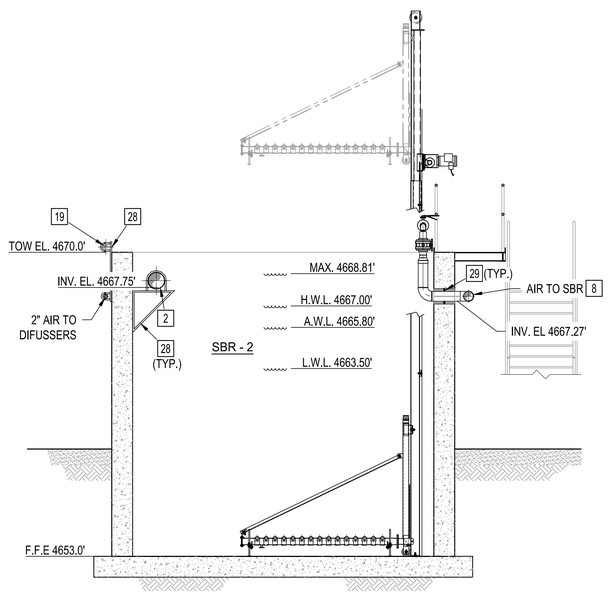

MECH SECTION - C
SCALE: 1/4"=1'-0"

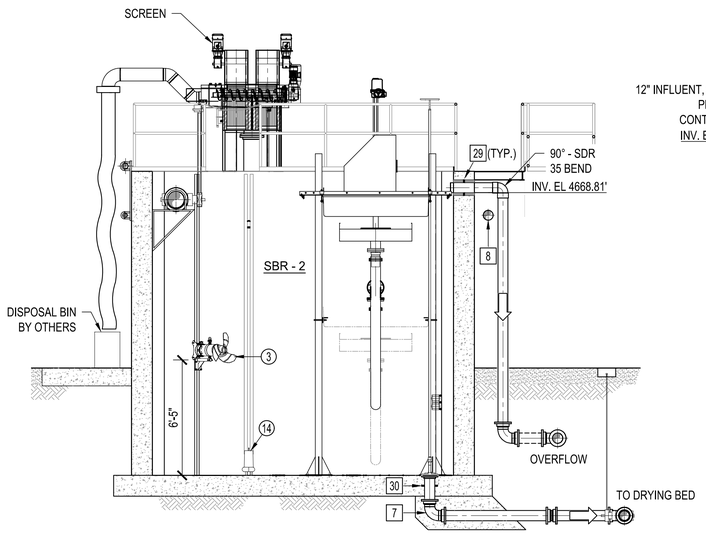

MECH SECTION - D
SCALE: 1/4"=1'-0"

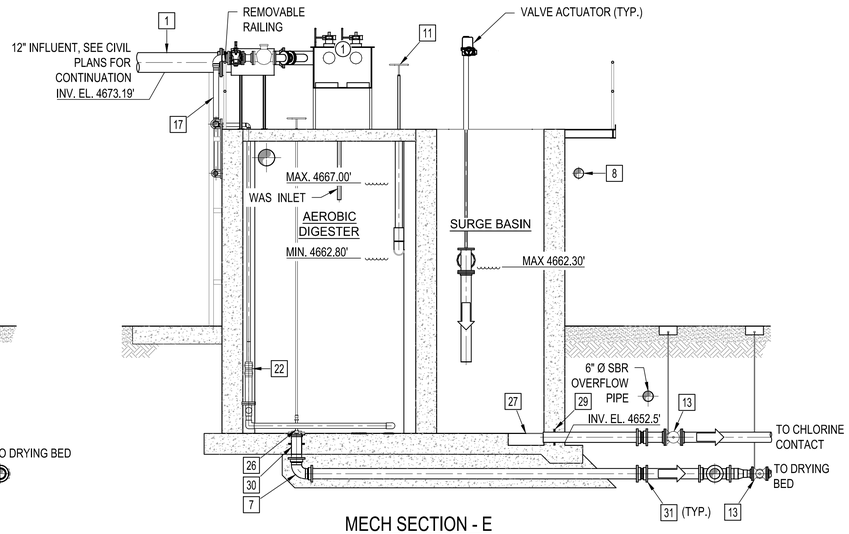

MECH SECTION - E
SCALE: 1/4"=1'-0"

CONSTRUCTION NOTES:

1. INSTALL12" D.I. PIPE (FLG'D).
2. INSTALL 10" INFLUENT D.I. PIPE (FLG'D).
3. INSTALL 10" - 90° D.I. BEND (FLG'D).
4. INSTALL 10" D.I. TEE (FLG'D).
5. INSTALL 6" D.I. PIPE (FLG'D).
6. INSTALL 6" D.I. TEE (FLG'D)
7. INSTALL 6" - 90° D.I. BEND (FLG'D).
8. INSTALL 6" SCH. 10 CARBON STEEL PIPE.
9. INSTALL 6" - 90° CARBON STEEL BEND.
10. INSTALL 6" - 90° CARBON STEEL BEND (FLG'D).
11. INSTALL 6" TELESCOPING VALVE W/ HANDWHEEL.
12. INSTALL 6" BUTTERFLY VALVE W/ ACTUATOR PER SPECIFICATIONS.
13. INSTALL BURRIED-SERVICE 6" PLUG VALVE WITH VALVE CAN AND NUT EXTENSION.
14. INSTALL 4" D.I. PIPE (FLG'D).
15. INSTALL 4" SCH. 10 CARBON STEEL PIPE.
16. INSTALL 4" SCH. 10 CARBON STEEL TEE.
17. INSTALL 4" x 3" SCH. 10 CARBON STEEL CONCENTRIC REDUCER.
18. INSTALL 4" ELECTRICALLY ACTUATED BUTTERFLY VALVE (VENDOR PROVIDED)
19. INSTALL 3" SCH. 80 PVC PIPE.
20. INSTALL 3" - 90° CARBON STEEL BEND (GROOVED).
21. INSTALL 3" BUTTERFLY VALVE PER SPECIFICATIONS.
22. INSTALL 2"x4" SS TO PVC CONCENTRIC REDUCER (SEE SECTION - A)
23. INSTALL 2" SCH. 10 CARBON STEEL PIPE.
24. INSTALL 2" SCH. 10 WELDED CARBON STEEL 90° BEND.
25. INSTALL RETRIEVABLE DIFFUSER ASSEMBLY w/ FLEXIBLE HOSE.
26. INSTALL MUD VALVE w/ EXTENSION PER PLAN.
27. INSTALL 2'x2' SUMP PER STRUCTURAL PLANS.
28. INSTALL PIPE SUPPORTS PER DETAIL A ON SHEET M8.5.
29. INSTALL PIPE PENETRATION PER DETAIL G SHEET M8.4.
30. INSTALL PIPE PENETRATION PER DETAIL F SHEET M8.3.
31. INSTALL DEFLECTION COUPLING.

NO	BY	DATE	REVISIONS	DATE	APP.

Registered Professional Engineer (Civil) CERTIFICATE NO. 70097 Signed Date 12/31/25 ARIZONA, U.S.A. Expires 12/31/26

THESE DRAWINGS ARE THE PROPERTY OF P.A.C.E. AND SHALL NOT BE REPRODUCED IN ANY MANNER NOR BE USED FOR CONSTRUCTION UNLESS STAMPED 'ISSUED FOR CONSTRUCTION'.

PREPARED BY: PACE
DESIGNED BY: NE
DRAWN BY: DS, WW
CHECKED BY: TP
SCALE: AS NOTED
DATE: NOV 2025
JOB NO.: B614

TITLE: **SBR MECHANICAL SECTIONS**

100% ISSUED FOR BID

PREPARED BY: TAYLOR B. PIERCE R.C.E 70097 DATE

PACE
Advanced Water Engineering
8723 E. Via de Ventura Suite 150 | SCOTTSDALE, CA 85258
P: (480) 991-3995 | www.paceaz.com

JOB: TOWN OF JEROME WASTEWATER TREATMENT PLANT YAVAPAI CO. AZ

SHEET **M3.2** 37 OF 99 SHEETS

JOB NO. B614

W:\B614\Engineering\B614-30sheets\B614 - M3.2 MECHANICAL SECTIONS.dwg - Tab: M3.2 - by raddington on 11/17/25 at 2:34:34 PM

CONSTRUCTION NOTES:

1. INSTALL CONCRETE CHLORINE CONTACT CHANNEL PER STRUCTURAL SHT S1.5.
2. INSTALL TABLET EROSION CHLORINATION EQUIPMENT.
3. INSTALL TABLET EROSION DE-CHLORINATION EQUIPMENT.
4. INSTALL SOLID METAL GRATING WALKWAY PER SPECIFICATION 05 53 00.
5. INSTALL UPWARD WEIR GATE PER SPECIFICATION 40 0513.53.
6. INSTALL 6" FLOW METER.
7. INSTALL 6" ACTUATED BUTTERFLY VALVE.
8. INSTALL 3' x 3' CAST IN PLACE BOX & TRAFFIC RATED COVER.
9. INSTALL 6" D.I. PIPE.
10. INSTALL 6" - 90° D.I. BEND.
11. INSTALL 6" - 90° SCH. 40 PVC BEND.
12. INSTALL PIPE SUPPORTS PER DETAIL A SHEET M8.5.
13. INSTALL PVC FLANGE ADAPTER.
14. INSTALL 6" SCH. 40 PVC PIPE.
15. INSTALL 4" ELECTRICALLY ACTUATED PLUG VALVE.
16. INSTALL DEWATERING FEED PUMP.
17. INSTALL DRY POLYMER MAKE-DOWN AND FEED UNIT.
18. INSTALL POLYMER METERING PUMP.
19. INSTALL BAGGER SYSTEM CONTROL PANEL.
20. INSTALL 2" X 1" PVC REDUCING BUSHING.
21. INSTALL 2" SCH. 80 PVC TEE.
22. INSTALL 2" - 90° SCH. 80 PVC BEND.
23. INSTALL PVC CAP.
24. INSTALL 4" X 2" DI REDUCER.
25. INSTALL SHADE STRUCTURE (PER STRUCTURAL SHT S2.10).
26. INSTALL 30" ALUMINUM STEP-UP STAIRCASE.
27. INSTALL METAL GRATING WALKWAY PER SPECIFICATION 05 53 00.
28. INSTALL PIPE PENETRATION PER DETAIL G, SHEET M8.4.

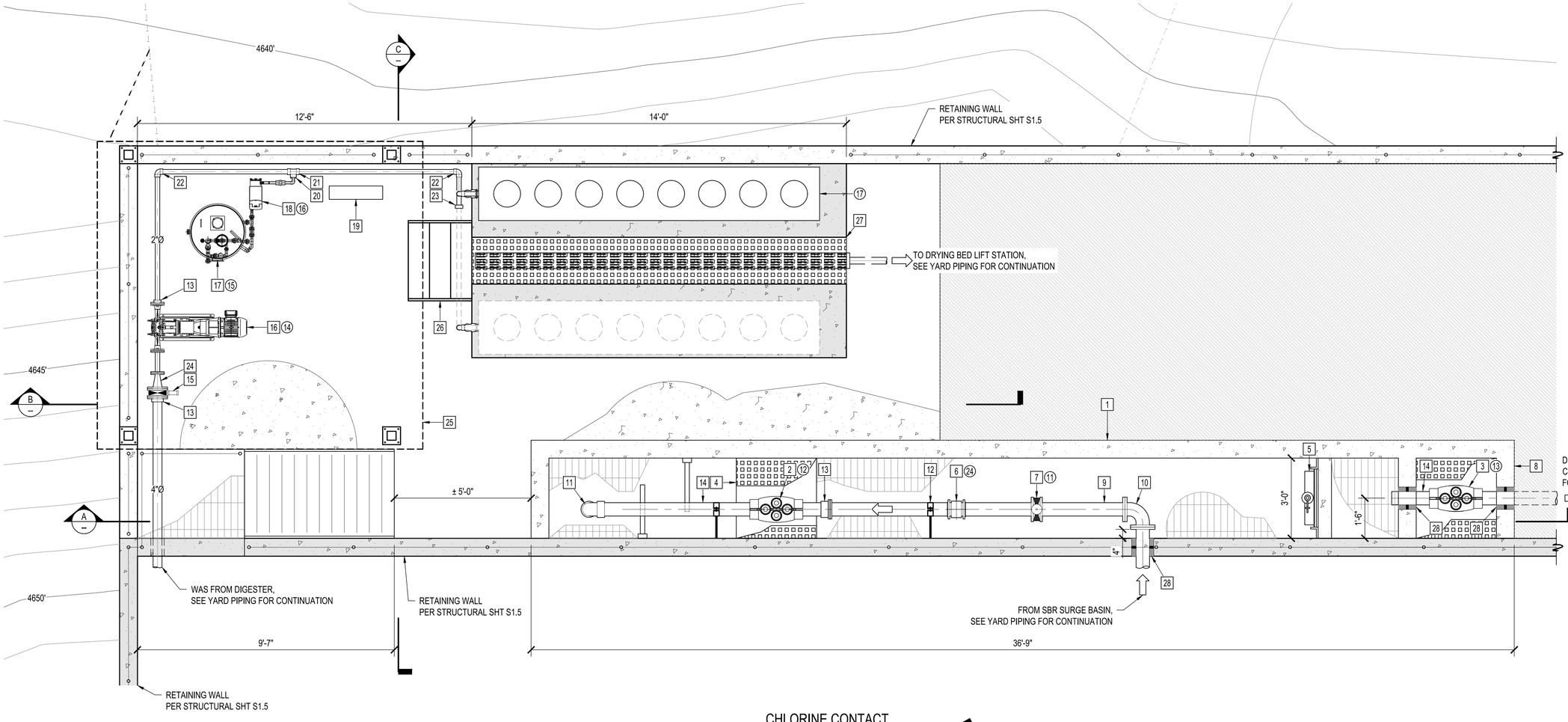

CHLORINE CONTACT
CHANNEL PLAN
SCALE: 1/2"=1'-0"

NORTH

NO	BY	DATE	REVISIONS	DATE	APP.

Registered Professional Engineer (Civil)
CERTIFICATE NO. 70097
Timothy B. Pierce
Signed
ARIZONA, U.S.A.
Expires 12/31/28

THESE DRAWINGS ARE THE PROPERTY OF P.A.C.E. AND SHALL NOT BE REPRODUCED IN ANY MANNER NOR BE USED FOR CONSTRUCTION UNLESS STAMPED 'ISSUED FOR CONSTRUCTION'.

PREPARED BY: PACE
DESIGNED BY: NE
DRAWN BY: DS, WW
CHECKED BY: TP
SCALE: AS NOTED
DATE: NOV 2025
JOB NO.: B614

TITLE: **DEWATERING & CCC MECH PLAN**

JOB: TOWN OF JEROME WASTEWATER TREATMENT PLANT — YAVAPAI CO. AZ

100% ISSUED FOR BID

PREPARED BY:
TAYLOR B. PIERCE R.C.E 70097 DATE

PACE
Advanced Water Engineering
8723 E. VIA de VENTURA, SUITE 290 | SCOTTSDALE, CA 85258
P: (480) 991-3995 | www.pacewater.com

SHEET
M4.0
38 OF 99 SHEETS

JOB NO. B614

W:\B614\Engineering\B614-30sheets\B614 - M4.0 CCC MECH PLAN AND SECTIONS.dwg - Tab: PLAN VIEW - by reddington on 03/02/26 at 8:58:43 AM

CONSTRUCTION NOTES:

1. INSTALL CONCRETE CHLORINE CONTACT CHANNEL PER STRUCTURAL SHT S1.5.
2. INSTALL TABLET EROSION CHLORINATION EQUIPMENT.
3. INSTALL TABLET EROSION DE-CHLORINATION EQUIPMENT.
4. INSTALL SOLID METAL GRATING WALKWAY PER SPECIFICATION 05 53 00.
5. INSTALL UPWARD WEIR GATE PER SPECIFICATION 40 0513.53.
6. INSTALL 6" FLOW METER.
7. INSTALL 6" ACTUATED BUTTERFLY VALVE.
8. GROUT FILL & SLOPE TO INVERT.
9. INSTALL 6" D.I. PIPE.
10. INSTALL 6" - 90° D.I. BEND.
11. INSTALL PIPE SUPPORTS PER DETAIL A SHEET M8.5.
12. INSTALL 6" - 90° SCH. 40 PVC BEND.
13. INSTALL PVC FLANGE ADAPTER
14. INSTALL 6" SCH. 40 PVC PIPE.
15. INSTALL PIPE PENETRATION PER DETAIL G SHEET M8.4.

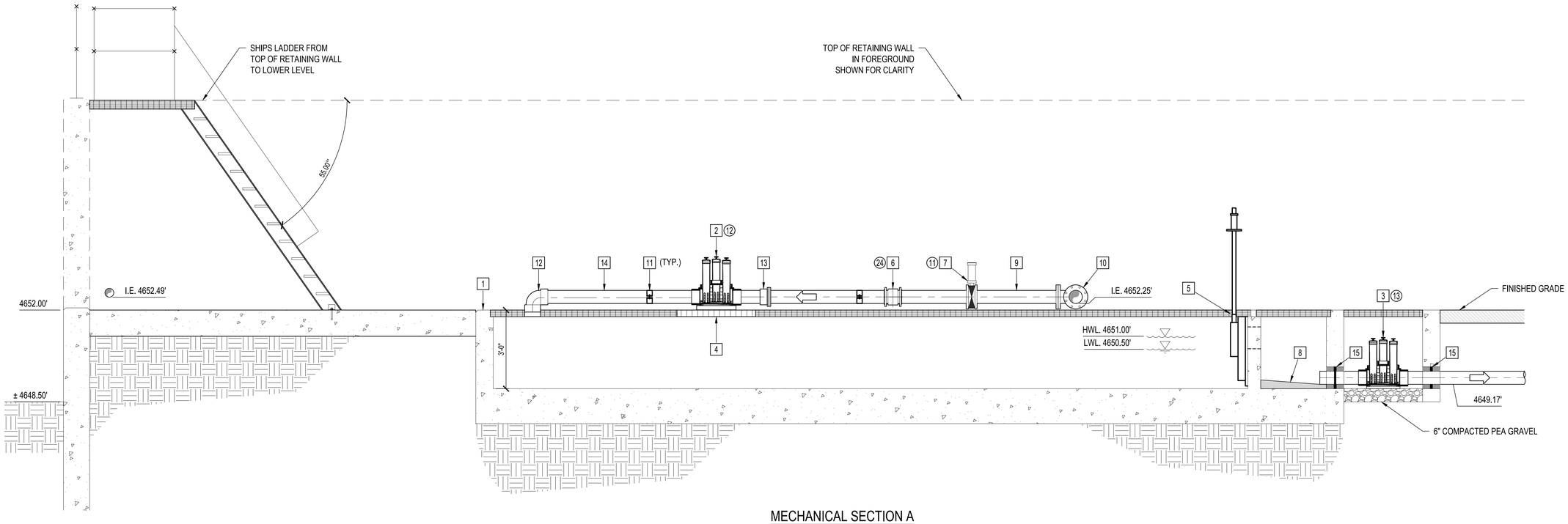

MECHANICAL SECTION A

SCALE: 1/2"=1'-0"

NO	BY	DATE	REVISIONS	DATE	APP.

Registered Professional Engineer (Civil) CERTIFICATE NO. 70097 TAYLOR B. PIERCE Signed ARIZONA, U.S.A. Expires 12/31/28

PREPARED BY: PACE
DESIGNED BY: NE
DRAWN BY: DS, WW
CHECKED BY: TP
SCALE: AS NOTED
DATE: NOV 2025
JOB NO.: B614

THESE DRAWINGS ARE THE PROPERTY OF P.A.C.E. AND SHALL NOT BE REPRODUCED IN ANY MANNER NOR BE USED FOR CONSTRUCTION UNLESS STAMPED 'ISSUED FOR CONSTRUCTION'.

TITLE: CHLORINE CONTACT BASIN SECTION

JOB: TOWN OF JEROME WASTEWATER TREATMENT PLANT — YAVAPAI CO. AZ

100% ISSUED FOR BID

PREPARED BY: TAYLOR B. PIERCE R.C.E 70097 DATE

PACE
Advanced Water Engineering
8723 E. Via de Commercio, Suite 104 | Scottsdale, AZ 85258
P: (480) 991-3595 | www.pacewater.com

SHEET M4.1
39 OF 99 SHEETS

JOB NO. B614

W:\B614\Engineering\B614-30\sheets\B614 - MA 0 CCC MECH PLAN AND SECTIONS.dwg - Tab: SECTION 1 - by reddington on 03/02/26 at 9:58:43 AM

CONSTRUCTION NOTES:

1. INSTALL CONCRETE CHLORINE CONTACT CHANNEL PER STRUCTURAL SHT S1.5.
2. INSTALL SOLID METAL GRATING WALKWAY PER SPECIFICATION 05 53 00.
3. INSTALL 6" D.I. PIPE.
4. INSTALL SLUDGE BAGGER SYSTEM.
5. INSTALL SHADE STRUCTURE (PER STRUCTURAL SHT S2.10).
6. INSTALL 14 LF TRENCH DRAIN, NEI MODEL R4996-A8. OR ENGINEER APPROVED EQUAL.
7. INSTALL METAL GRATING WALKWAY PER SPECIFICATION 05 53 00.
8. INSTALL 1" PVC CHECK VALVE.
9. INSTALL 1" BALL VALVE.
10. INSTALL 1" - 90° SCH. 80 PVC BEND.
11. INSTALL 2" SCH. 80 PVC PIPE.
12. INSTALL BAGGER SYSTEM CONTROL PANEL.
13. INSTALL POLYMER METERING PUMP.
14. INSTALL DRY POLYMER MAKE-DOWN AND FEED UNIT.
15. INSTALL DEWATERING FEED PUMP.
16. INSTALL 3" - 90° SCH. 80 PVC BEND.
17. INSTALL 3" SCH. 80 PVC PIPE.
18. INSTALL 3" SCH.80 PVC TEE.
19. INSTALL PVC CAP.
20. RETAINING WALL, PER STRUCTURAL PLANS
21. INSTALL 30" ALUMINUM STEP-UP STAIRCASE.
22. INSTALL 2" - 90° SCH. 80 PVC BEND.
23. PIPE PENETRATION PER G SHEET M8.4.

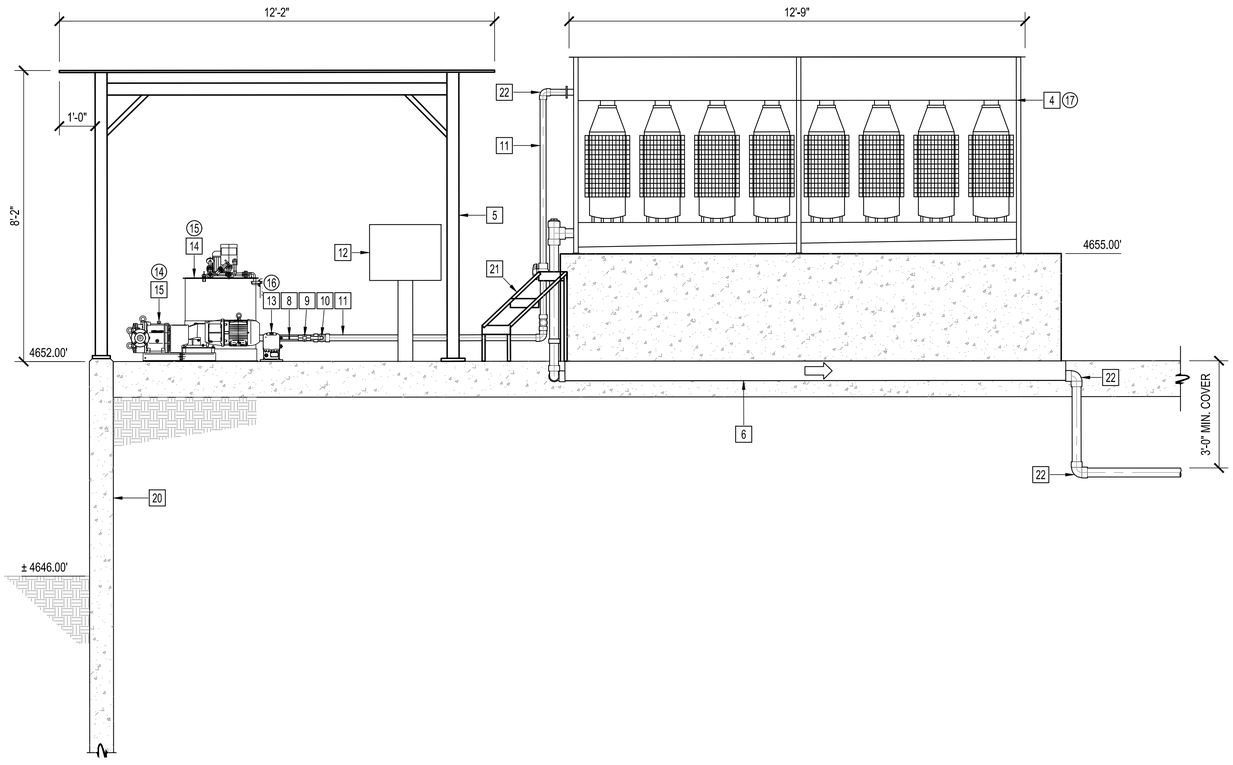

MECHANICAL SECTION B
SCALE: 1/2"=1'-0"

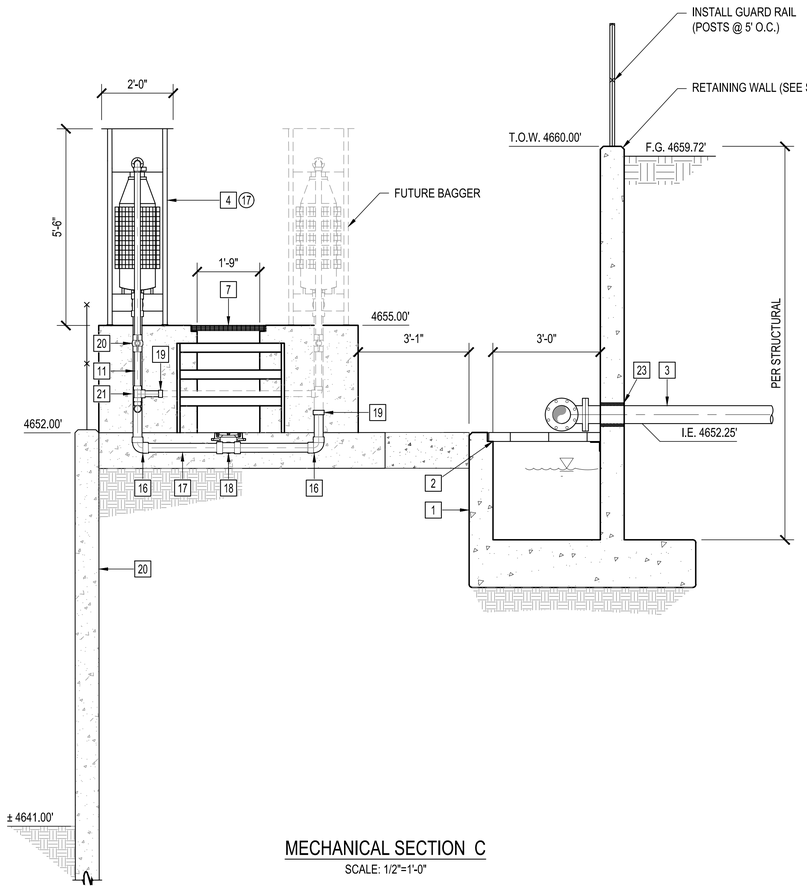

MECHANICAL SECTION C
SCALE: 1/2"=1'-0"

NO	BY	DATE	REVISIONS	DATE	APP.

Registered Professional Engineer (Civil) CERTIFICATE NO. 70097 Timothy B. Pierce Signed ARIZONA U.S.A. Expires 12/31/28

PREPARED BY: PACE
DESIGNED BY: NE
DRAWN BY: DS, WW
CHECKED BY: TP
SCALE: AS NOTED
DATE: NOV 2025
JOB NO. B614

THESE DRAWINGS ARE THE PROPERTY OF P.A.C.E. AND SHALL NOT BE REPRODUCED IN ANY MANNER NOR BE USED FOR CONSTRUCTION UNLESS STAMPED 'ISSUED FOR CONSTRUCTION'.

TITLE
DEWATERING SECTION

JOB
TOWN OF JEROME
WASTEWATER
TREATMENT PLANT
YAVAPAI CO. AZ

100% ISSUED FOR BID

PREPARED BY:
PACE
Advanced Water Engineering
8723 E. VIA de VENTURA, SUITE 290 | SCOTTSDALE, CA 85258
P: (480) 991-3995 | www.pacewater.com
TAYLOR B. PIERCE R.C.E 70097 DATE

SHEET
M4.2
40 OF 99 SHEETS

JOB NO. B614

W:\B614\Engineering\B614-30sheets\B614 - M4.0 CCC MECH PLAN AND SECTIONS.dwg - Tab: SECTION 2 - by reddington on 03/02/26 at 9:58:43 AM

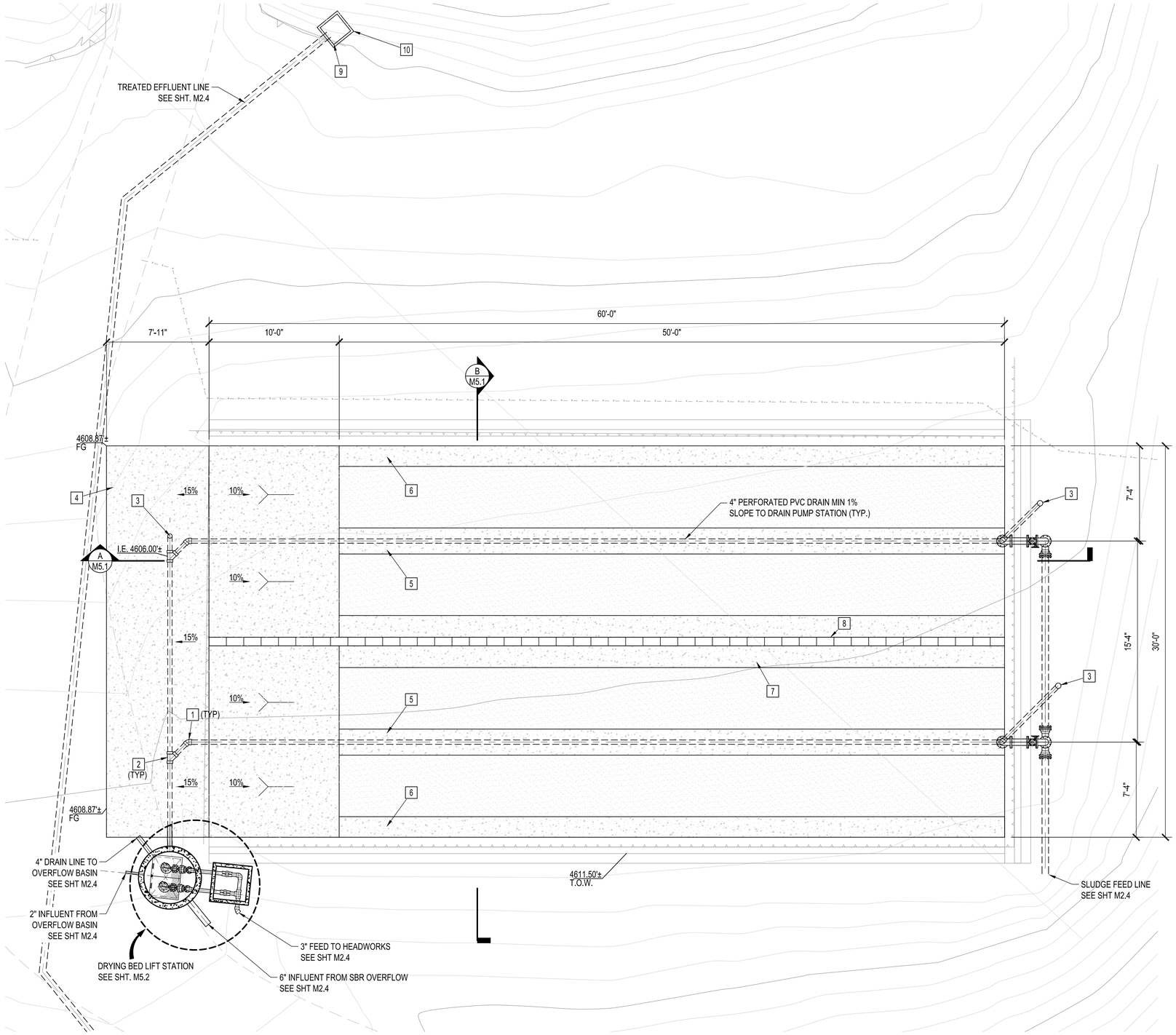

SLUDGE DRYING BED
PLAN VIEW
SCALE: 1/4" = 1'-0"

CONSTRUCTION NOTES:

1. INSTALL 4" - 45° SDR35 PVC BEND.
2. INSTALL 4"x4" SDR35 PVC WYE.
3. INSTALL 4" CLEANOUT PER DETAIL I SHEET M8.3.
4. INSTALL 8" THICK CONCRETE RAMP W #5 AT 12" O.C. EACH WAY, BOTTOM OVER 6" ABC.
5. INSTALL 2'-0" WIDE x8" THICK CONCRETE SLAB W/ 3 #5 CONT. AND #5 AT 16" O.C. TRANS., BOTTOM. TYPICAL OF 2.
6. INSTALL 1'-7" WIDE x8" THICK CONCRETE SLAB W/ 2 #5 CONT. AND #5 AT 16" O.C. TRANS., BOTTOM. TYPICAL OF 2.
7. INSTALL 3'-10" WIDE x12" THICK CONCRETE SLAB W/ 6 #5 CONT. AND #5 AT 16" O.C. TRANS., BOTTOM.
8. INSTALL CMU BLOCK WALL, #5 VERTICAL W/ DOWEL INTO CONCRETE PAD AT 48" O.C. ALTERNATING, GROUT WALL SOLID.
9. INSTALL AUTOSAMPLER, PROVIDED BY TOWN.
10. INSTALL 2'x2'x2' CATCH BASIN TYPE G W/ SINGLE GRATE AND 6" INLET/OUTLET.

NOTES:

1. SLOPE GRADE MIN. 5:1 AWAY AS NEEDED AROUND ENTIRE PERIMETER.
2. PROTECT IN PLACE EXISTING ROADWAY BARRIERS.

NO	BY	DATE	REVISIONS	DATE	APP.

Registered Professional Engineer (Civil)
CERTIFICATE NO. 70097
TAYLOR B. PIERCE
Signed
ARIZONA, U.S.A.
Expires 12/31/28

PREPARED BY: PACE
DESIGNED BY: NE
DRAWN BY: DS, WW
CHECKED BY: TP
SCALE: AS NOTED
DATE: NOV 2025
JOB NO.: B614

THESE DRAWINGS ARE THE PROPERTY OF P.A.C.E. AND SHALL NOT BE REPRODUCED IN ANY MANNER NOR BE USED FOR CONSTRUCTION UNLESS STAMPED 'ISSUED FOR CONSTRUCTION'.

TITLE
SLUDGE DRYING BEDS PLAN

100% ISSUED FOR BID

JOB
TOWN OF JEROME
WASTEWATER
TREATMENT PLANT
YAVAPAI CO. AZ

PREPARED BY:
TAYLOR B. PIERCE R.C.E 70097 DATE
PACE
Advanced Water Engineering
8723 E. Via de Commercio, Suite 1, Scottsdale, AZ 85258
P: (480) 991-3995 | www.pacewater.com

SHEET
M5.0
41 OF 99 SHEETS

JOB NO. B614

W:\B614\Engineering\B614-30\sheets\B614 - M5.0 SLUDGE DRYING BEDS PLAN.dwg - Tab: M5.0 - by reddington on 11/19/25 at 3:14:09 PM

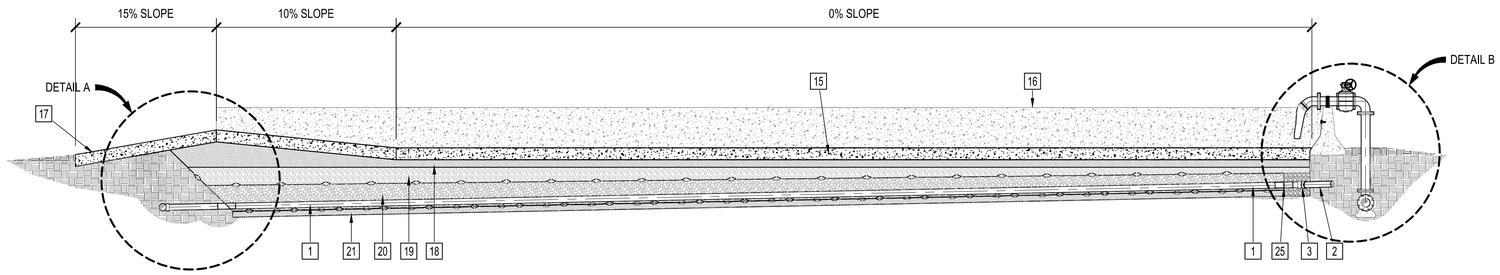

SLUDGE DRYING BED
SECTION - A
SCALE: 1/4" = 1'-0"

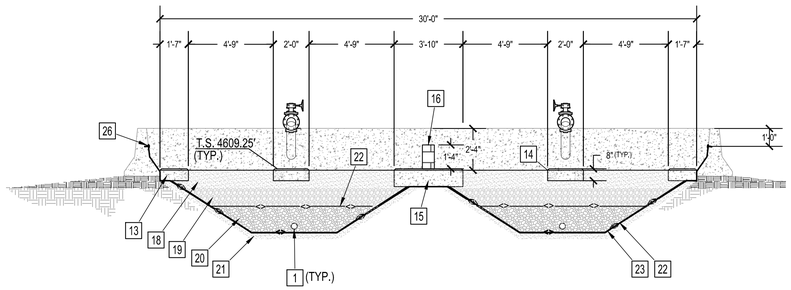

SLUDGE DRYING BED
SECTION - B
SCALE: 1/4" = 1'-0"

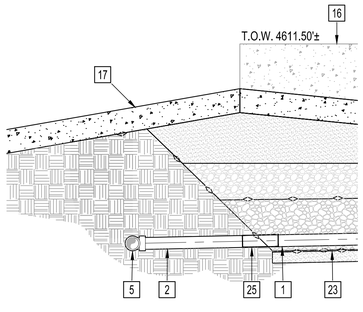

SLUDGE DRYING BED
DETAIL - A
SCALE: 1/2" = 1'-0"

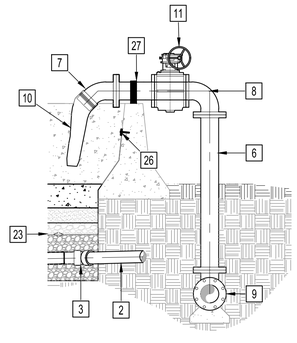

SLUDGE DRYING BED
DETAIL - B
SCALE: 1/2" = 1'-0"

CONSTRUCTION NOTES:

1. INSTALL 4" SDR 35 PVC PERFORATED PIPE.
2. INSTALL 4" SDR 35 PVC PIPE.
3. INSTALL 4" - 45° SDR35 PVC BEND.
4. INSTALL 4" - 90° LONG RADIUS SDR 35 PVC BEND.
5. INSTALL 4" SDR 35 PVC WYE.
6. INSTALL 6" D.I. PIPE.
7. INSTALL 6" - 45° D.I. BEND (FLG'D).
8. INSTALL 6" - 90° D.I. BEND (FLG'D).
9. INSTALL 6"x6"x6" D.I. TEE MJ x FLG'D CONNECTIONS W/ THRUST BLOCK PER DETAIL C SHEET M8.4.
10. INSTALL 6" RUBBER SKIRT W/ SS CLAMPS.
11. INSTALL 6" PLUG VALVE W/ HANDWHEEL.
12. INSTALL 4" CLEANOUT PER DETAIL I SHEET M8.3.
13. INSTALL 1'-7" WIDE x8" THICK CONCRETE SLAB W/ 2 #5 CONT. AND #5 AT 16" O.C. TRANS., BOTTOM. TYPICAL OF 2.
14. INSTALL 2'-0" WIDE x8" THICK CONCRETE SLAB W/ 3 #5 CONT. AND #5 AT 16" O.C. TRANS., BOTTOM. TYPICAL OF 2.
15. INSTALL 3'-10" WIDE x12" THICK CONCRETE SLAB W/ 6 #5 CONT. AND #5 AT 16" O.C. TRANS., BOTTOM.
16. INSTALL CMU BLOCK WALL, #5 VERTICAL W/ DOWEL INTO CONCRETE PAD AT 48" O.C. ALTERNATING, GROUT WALL SOLID.
17. INSTALL 8" THICK CONCRETE RAMP W #5 AT 12" O.C. EACH WAY, BOTTOM OVER 6" ABC.
18. INSTALL 12" SAND LAYER.
19. INSTALL 4-8 mm FINE GRAVEL.
20. INSTALL 1'-6" DEEP ¾" CRUSHED ROCK.
21. INSTALL 4" GRANULAR SAND LAYER.
22. INSTALL 100 mm GEOTEXTILE FABRIC PER SPECS.
23. INSTALL FLEXIBLE POLYPROPYLENE LINER PER SPECS.
24. INSTALL ANCHOR TRENCH PER DETAIL D SHEET M8.3.
25. INSTALL PIPE BOOT PER LINER MANUFACTURER RECOMMENDATIONS AND DETAIL E SHEET M8.3.
26. INSTALL HDPE LINER ANCHOR BOLT, ANCHOR TO EXISTING WALLS PER DETAIL C SHEET M8.3.
27. PIPE SUPPORT / STRAP

NOTES:

1. SLOPE GRADE MIN. 5:1 AWAY AS NEEDED AROUND ENTIRE PERIMETER.
2. PROTECT IN PLACE EXISTING ROADWAY BARRIERS.

NO	BY	DATE	REVISIONS	DATE	APP.

THESE DRAWINGS ARE THE PROPERTY OF P.A.C.E. AND SHALL NOT BE REPRODUCED IN ANY MANNER NOR BE USED FOR CONSTRUCTION UNLESS STAMPED 'ISSUED FOR CONSTRUCTION'.

Registered Professional Engineer (Civil)
CERTIFICATE NO. 70097
TAYLOR B. PIERCE
Signed
ARIZONA, U.S.A.
Expires 12/31/28

PREPARED BY: PACE
DESIGNED BY: NE
DRAWN BY: DS, WW
CHECKED BY: TP
SCALE: AS NOTED
DATE: NOV 2025
JOB NO.: B614

TITLE: SLUDGE DRYING BEDS SECTIONS

JOB: TOWN OF JEROME WASTEWATER TREATMENT PLANT — YAVAPAI CO. AZ

100% ISSUED FOR BID

PREPARED BY:
PACE
Advanced Water Engineering
8123 E. VIA DE COMMERCIO, BLDG. 4, SCOTTSDALE, CA 85258
P: (480) 991-3595 | www.pacewater.com
TAYLOR B. PIERCE R.C.E 70097 DATE

SHEET
M5.1
42 OF 99 SHEETS

JOB NO. B614

W:\B614\Engineering\B614-3\Sheets\B614 - M5.0 SLUDGE DRYING BEDS PLAN.dwg - Tab: M5.1 - by maddington on 11/18/25 at 3:14:09 PM

CONSTRUCTION NOTES:

1. INSTALL 3" SCH. 80 PVC PIPE.
2. INSTALL 3" - 45° SCH. 80 PVC BEND.
3. INSTALL 3" - 90° DIP BEND.
4. INSTALL 3" SCH. 80 PVC TEE.
5. INSTALL 3" DIP PLUG VALVE.
6. INSTALL 3" DIP SWING CHECK VALVE.
7. INSTALL S.S PIPE SUPPORT PER DETAIL A SHEET M8.5.
8. INSTALL SUBMERSIBLE PUMP.
9. INSTALL 24"x36" ACCESS HATCH.
10. INSTALL LEVEL FLOAT ASSEMBLY AND SUPPORT STEM PER MANUFACTURER RECOMMENDATIONS.
11. INSTALL PUMP GUIDE RAIL SYSTEM PER MANUFACTURER RECOMMENDATIONS.
12. INSTALL PIPE PENETRATION PER DETAIL G SHEET M8.4.
13. INSTALL PRECAST 3' x 3' x 2' CONCRETE VAULT W/ ACCESS HATCH.
14. INSTALL 3" S.S. PIPE WELL AIR VENT PIPE W/ #20 MESH BUG SCREEN.
15. INSTALL 3+ PVC FLANGE ADAPTER.
16. INSTALL 3" - 90° DIP BEND.
17. INSTALL 3" DIP.
18. INSTALL PVC FLANGE ADAPTER.
19. COAT LIFT STATION AND PIPING FOR SEVERE H_2S CORROSION PER COATING SPECIFICATIONS
20. SUBGRADE PER GEOTECH REPORT

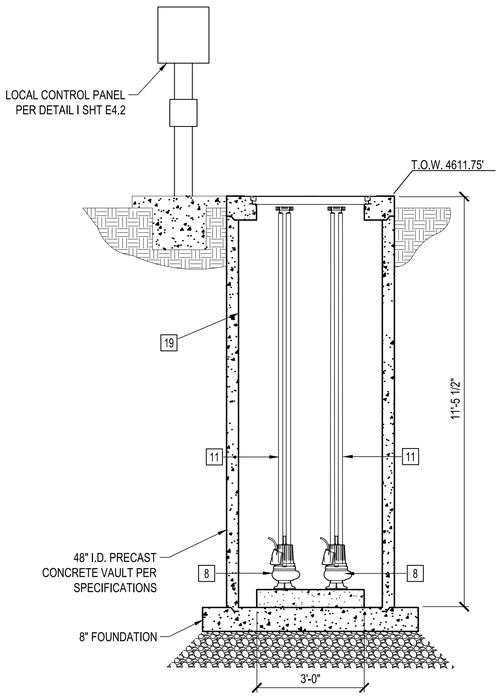

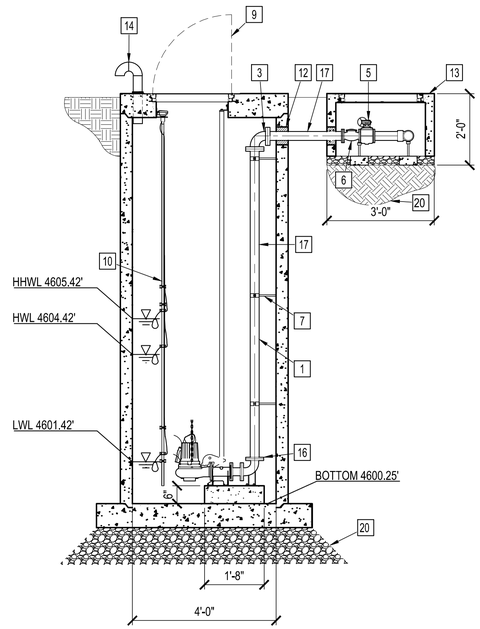

DRYING BED LIFT STATION
SECTIONS
SCALE: 1/2" = 1'-0"

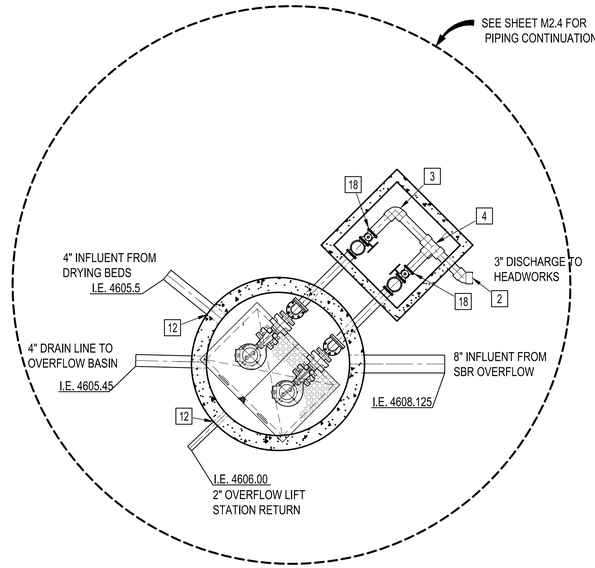

DRYING BED LIFT STATION
PLAN VIEW
SCALE: 1/2" = 1'-0"

NO	BY	DATE	REVISIONS	DATE	APP.

Registered Professional Engineer (Civil)
CERTIFICATE NO. 70097
TAYLOR B. PIERCE
Signed
ARIZONA, U.S.A.
Expires 12/31/28

THESE DRAWINGS ARE THE PROPERTY OF P.A.C.E. AND SHALL NOT BE REPRODUCED IN ANY MANNER NOR BE USED FOR CONSTRUCTION UNLESS STAMPED 'ISSUED FOR CONSTRUCTION'.

PREPARED BY: PACE
DESIGNED BY: NE
DRAWN BY: DS, WW
CHECKED BY: TP
SCALE: AS NOTED
DATE: NOV 2025
JOB NO.: B614

TITLE: DRYING BED LIFT STATION SECTIONS

JOB: TOWN OF JEROME
WASTEWATER
TREATMENT PLANT
YAVAPAI CO. AZ

100% ISSUED FOR BID

PREPARED BY:
PACE
Advanced Water Engineering
8723 E. VIA de COMMERCIO, SUITE 104, SCOTTSDALE, CA 85258
P: (408) 991-3595 | www.pacewater.com
TAYLOR B. PIERCE R.C.E 70097 DATE

SHEET
M5.2
43 OF 99 SHEETS

JOB NO. B614

W:\B614\Engineering\B614-3\Sheets\B614 - M5.0 SLUDGE DRYING BEDS PLAN.dwg - Tab: M5.2 - by noddington on 11/19/25 at 3:14:09 PM

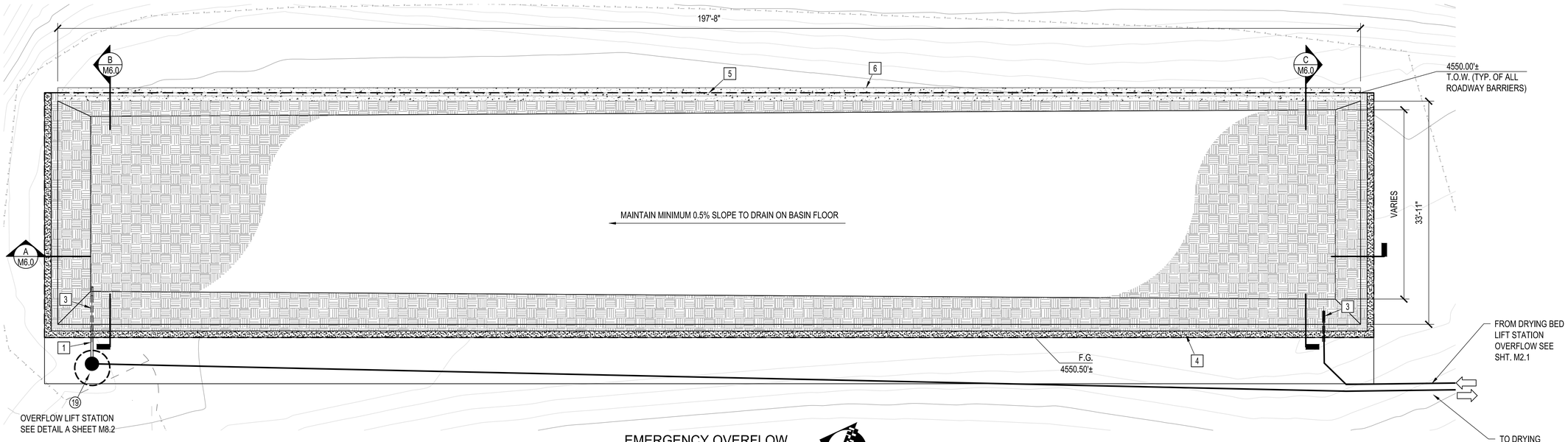

EMERGENCY OVERFLOW
BASIN PLAN VIEW
SCALE: 1/8" = 1'-0"

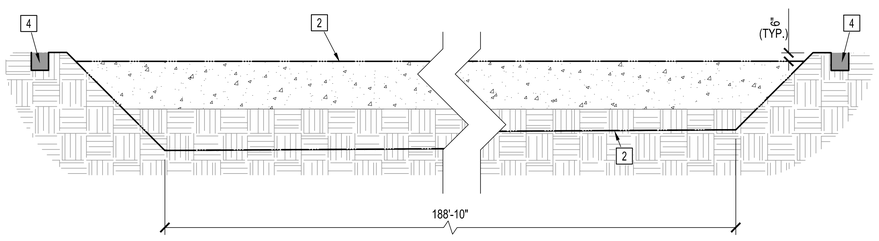

EMERGENCY OVERFLOW BASIN
SECTION - A
SCALE: 1/4" = 1'-0"

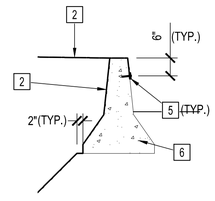

EMERGENCY OVERFLOW BASIN
DETAIL - A
SCALE: 1/2" = 1'-0"

CONSTRUCTION NOTES:

1. INSTALL 4" SDR 35 PVC PIPE.
2. INSTALL HDPE LINER PER SPECIFICATION 31 05 19.16.
3. INSTALL PIPE BOOT PER LINER MANUFACTURER RECOMMENDATIONS AND DETAIL E SHEET M8.3.
4. INSTALL ANCHOR TRENCH PER DETAIL D SHEET M8.3.
5. INSTALL HDPE LINER ANCHOR BOLT, ANCHOR TO EXISTING WALLS PER DETAIL C. SHEET M8.3.
6. PROTECT IN PLACE EXISTING ROADWAY BARRIERS.

NOTES:

1. GRADE ALL BASIN WALLS WITH 1:1 SLOPE TO BASIN FLOOR.
2. SLOPE GRADE MIN 5:1 AWAY AS NEEDED AROUND ENTIRE PERIMETER.
3. CONTRACTOR TO RELOCATE EXISTING ROADWAY BARRIERS FROM ABANDONED BASIN AS NEEDED.

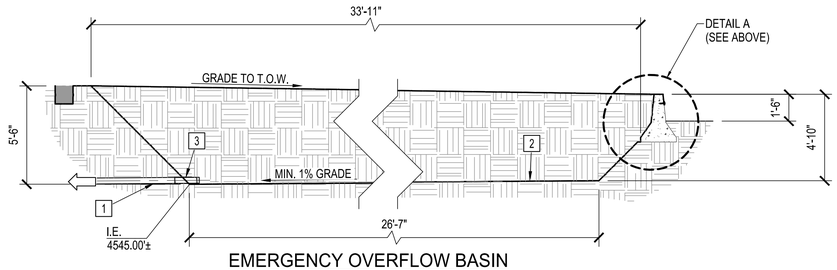

EMERGENCY OVERFLOW BASIN
SECTION - B
SCALE: 1/4" = 1'-0"

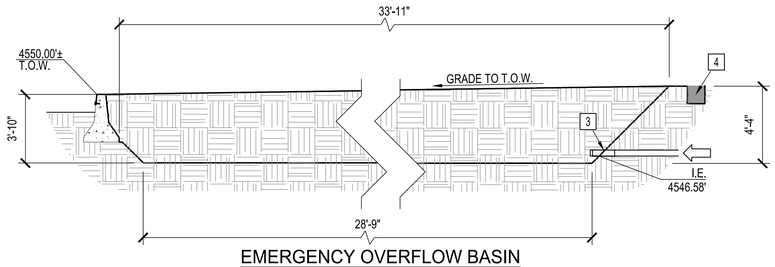

EMERGENCY OVERFLOW BASIN
SECTION - C
SCALE: 1/4" = 1'-0"

THESE DRAWINGS ARE THE PROPERTY OF P.A.C.E. AND SHALL NOT BE REPRODUCED IN ANY MANNER NOR BE USED FOR CONSTRUCTION UNLESS STAMPED 'ISSUED FOR CONSTRUCTION'.

NO	BY	DATE	REVISIONS	DATE	APP.

Registered Professional Engineer (Civil)
CERTIFICATE NO. 70097
Timothy B. Pierce
Signed
ARIZONA, U.S.A.
Expires 12/31/28

PREPARED BY: PACE
DESIGNED BY: NE
DRAWN BY: DS, WW
CHECKED BY: TP
SCALE: AS NOTED
DATE: NOV 2025
JOB NO.: B614

TITLE: EMERGENCY OVERFLOW BASIN PLAN AND SECTIONS

JOB: TOWN OF JEROME WASTEWATER TREATMENT PLANT — YAVAPAI CO. AZ

100% ISSUED FOR BID

PREPARED BY: TAYLOR B. PIERCE — R.C.E 70097 — DATE

PACE
Advanced Water Engineering
8723 E. VIA DE VENTURA, SUITE A-100, SCOTTSDALE, CA 85258
P: (480) 991-3995 | www.pacewater.com

SHEET
M6.0
44 OF 99 SHEETS

JOB NO. B614

W:\B614\Engineering\B614-30sheets\B614 - M6.0 EMERGENCY OVERFLOW STORAGE PLAN.dwg - Tab: M6.0 - by reddington on 11/19/25 at 2:37:31 PM

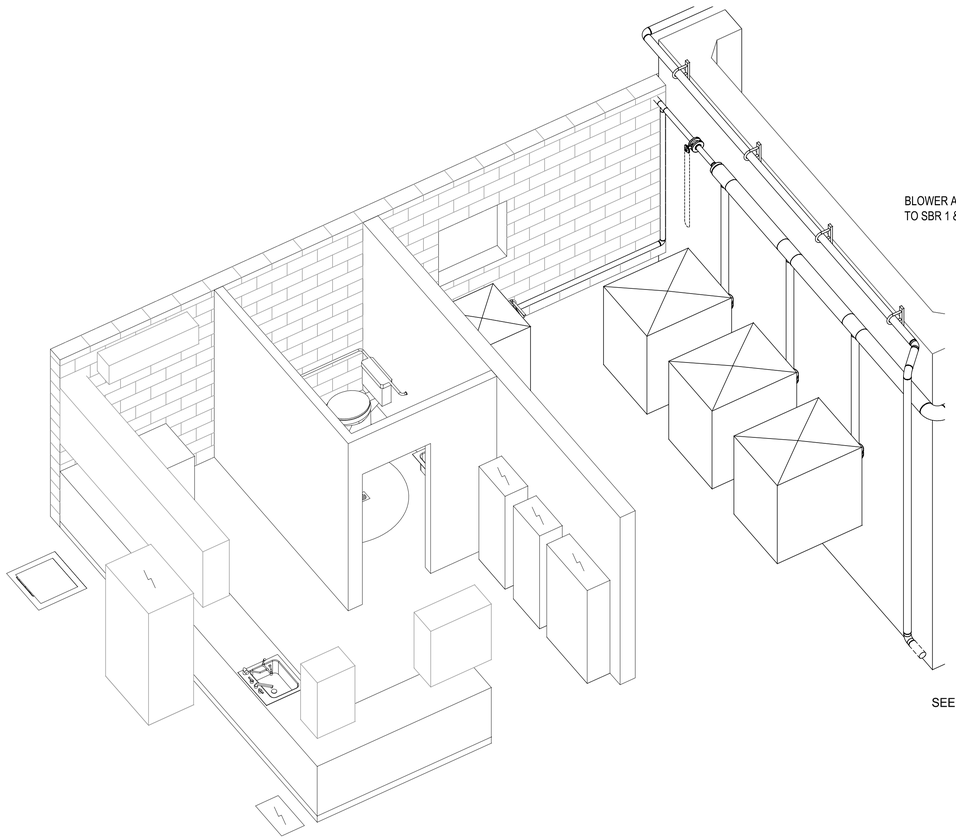

ISOMETRIC VIEW - NE
SCALE: N.T.S.

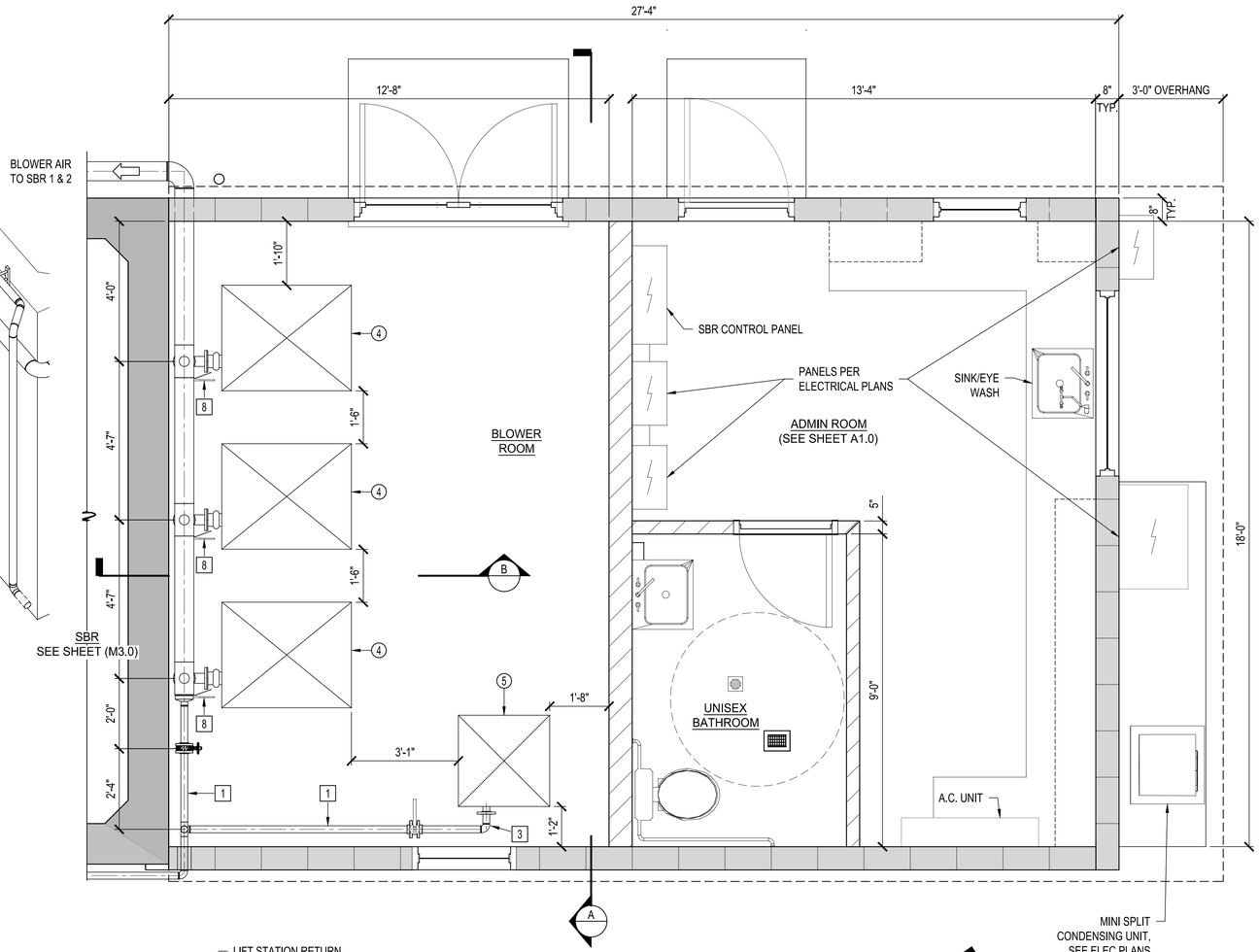

MECHANICAL PLAN - ABOVE
SCALE: 1/2" = 1'-0"

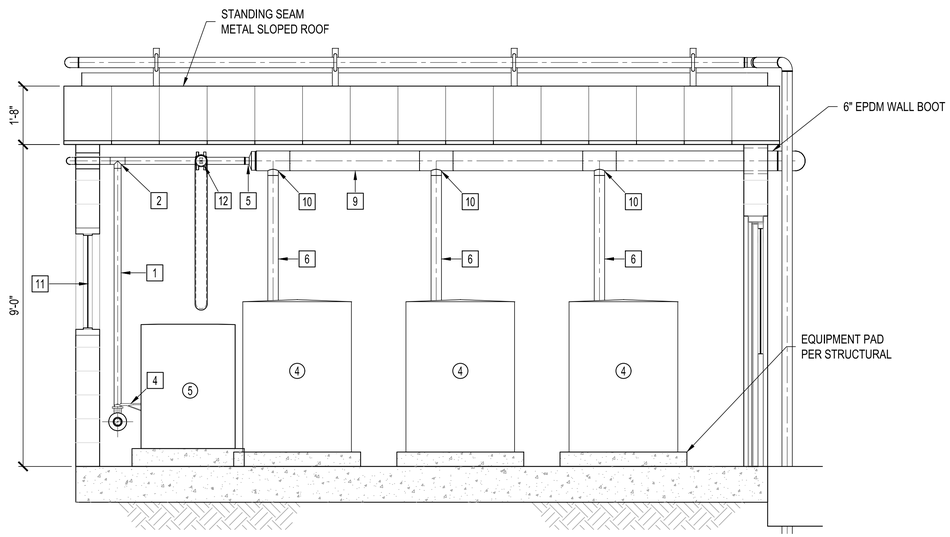

SECTION-A
SCALE: 1/2" = 1'-0"

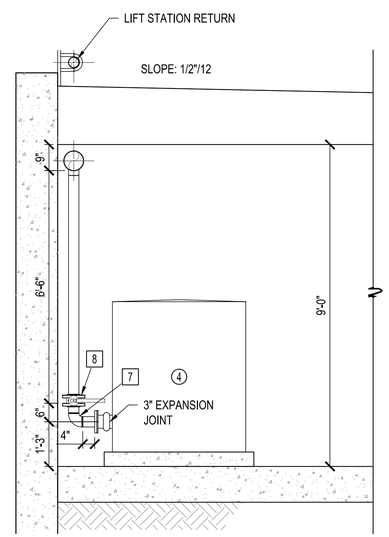

SECTION-B
SCALE: 1/2" = 1'-0"

CONSTRUCTION NOTES:

1. INSTALL 2" SCH. 10 CARBON STEEL PIPE.
2. INSTALL 2" SCH. 10 CARBON STEEL TEE.
3. INSTALL 2" - 90° SCH. 10 CARBON STEEL BEND
4. INSTALL 2" BUTTERFLY VALVE.
5. INSTALL 6"x2" SCH. 10 CARBON STEEL REDUCER.
6. INSTALL 3" SCH. 10 CARBON STEEL PIPE.
7. INSTALL 3" - 90° SCH. 10 CARBON STEEL BEND.
8. INSTALL 3" BUTTERFLY VALVE.
9. INSTALL 6" SCH. 10 CARBON STEEL PIPE.
10. INSTALL 6"x3"x6" SCH. 10 CARBON STEEL TEE.
11. INSTALL 3'x3' ACOUSTICAL LOUVER PER SPECIFICATION 08 9100.
12. INSTALL 2" BUTTERFLY VALVE WITH CHAIN WHEEL

NO	BY	DATE	REVISIONS	DATE	APP.

Registered Professional Engineer (Civil)
CERTIFICATE NO. 70097
Signed
TAYLOR B. PIERCE
ARIZONA, U.S.A.
Expires 12/31/28

PREPARED BY: PACE
DESIGNED BY: NE
DRAWN BY: DS, WW
CHECKED BY: TP
SCALE: AS NOTED
DATE: NOV 2025
JOB NO.: B614

THESE DRAWINGS ARE THE PROPERTY OF P.A.C.E. AND SHALL NOT BE REPRODUCED IN ANY MANNER NOR BE USED FOR CONSTRUCTION UNLESS STAMPED 'ISSUED FOR CONSTRUCTION'.

100% ISSUED FOR BID

TITLE: **BLOWER OPS PLAN**

JOB: TOWN OF JEROME
WASTEWATER
TREATMENT PLANT
YAVAPAI CO. AZ

PREPARED BY: TAYLOR B. PIERCE
PACE
Advanced Water Engineering
8723 E. Vía de Commercio, Suite 2-104, SCOTTSDALE, CA 85258
P: (408) 991-3595 | www.pacewater.com
R.C.E 70097 DATE

SHEET
M7.0
45 OF 99 SHEETS

JOB NO. B614

W:\B614-Engineering\B614-03\sheets\B614 - M7.0 BLOWER OPS PLAN AND SECTIONS.dwg - Tab: M7.0 - by reddington on 11/21/25 at 12:21:09 PM

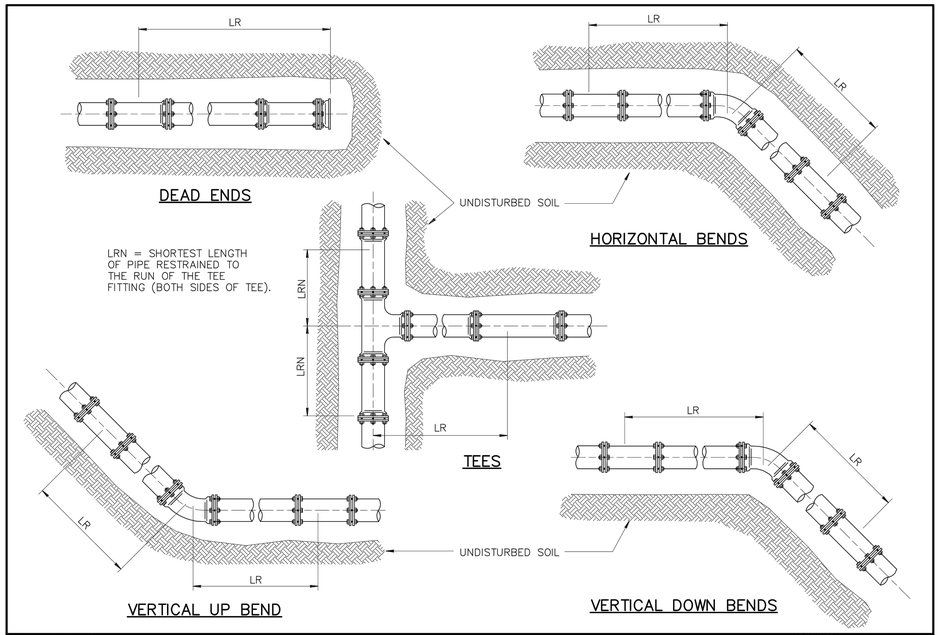

DETAIL NO.	STANDARD DETAIL	JOINT RESTRAINT FOR DUCTILE IRON, POLYETHYLENE WRAPPED DUCTILE IRON AND PVC WATER PIPES	REVISED	DETAIL NO.
303–1	MARICOPA ASSOCIATION of GOVERNMENTS ENGLISH		01–01–2019	303–1

M.A.G. STANDARD DETAIL #303-1

N.T.S. | A

RESTRAINED LENGTHS, LR, FOR DUCTILE IRON PIPE

NOMINAL PIPE SIZE INCHES	HORIZONTAL BENDS			TEES		VERTICAL OFFSETS						DEAD ENDS
						90° BEND FITTINGS		45° BEND FITTINGS		22–1/2° BEND FITTINGS		
	90°	45°	22–1/2°	LRN=0'	LRN=10'	DOWN BEND	UP BEND	DOWN BEND	UP BEND	DOWN BEND	UP BEND	
4	18	7	4	30	8	31	18	13	7	6	3	31
6	25	10	5	43	20	44	25	18	10	9	5	44
8	32	13	6	56	34	58	32	24	13	11	6	58
10	38	16	8	68	45	69	38	29	16	14	8	69
12	45	19	9	80	57	81	45	34	19	16	9	81
14	51	21	10	91	68	92	51	38	21	18	10	92
16	57	24	11	103	79	104	57	43	24	21	11	104
18	62	26	12	113	90	115	62	48	26	23	12	115
20	68	28	14	125	100	126	68	52	28	25	14	126
24	79	33	16	145	121	147	79	61	33	29	16	147

RESTRAINED LENGTHS, LR, FOR DUCTILE IRON WITH POLYETHYLENE WRAP AND PVC PIPE

NOMINAL PIPE SIZE INCHES	HORIZONTAL BENDS			TEES		VERTICAL OFFSETS						DEAD ENDS
						90° BEND FITTINGS		45° BEND FITTINGS		22–1/2° BEND FITTINGS		
	90°	45°	22–1/2°	LRN=0'	LRN=10'	DOWN BEND	UP BEND	DOWN BEND	UP BEND	DOWN BEND	UP BEND	
4	26	11	5	69	18	72	26	30	11	14	5	72
6	36	15	7	99	47	102	36	42	15	20	7	102
8	47	19	9	130	78	133	47	55	19	26	9	133
10	56	23	11	157	103	159	56	66	23	32	11	159
12	65	27	13	185	131	187	65	77	27	37	13	187
14	74	31	15	211	156	214	74	89	31	42	15	214
16	82	34	16	238	183	241	82	100	34	48	16	241
18	90	37	18	263	207	266	90	110	38	53	18	266
20	98	41	20	289	233	292	98	121	41	58	20	292
24	113	47	22	337	280	340	113	141	47	68	22	340

NOTES:

1. ALL JOINTS WITHIN THE SPECIFIED LENGTH LR MUST BE RESTRAINED. ALL LENGTHS ARE GIVEN IN FEET.
2. THE MAXIMUM TEST PRESSURE SHALL NOT EXCEED 200 PSI
3. THE MINIMUM DEPTH OF BURY SHALL BE 3' TO TOP OF PIPE.
4. RESTRAINED LENGTHS MAY BE REDUCED WHEN SUPPORTED BY ENGINEERING CALCULATIONS.

DETAIL NO.	STANDARD DETAIL	JOINT RESTRAINT FOR DUCTILE IRON, POLYETHYLENE WRAPPED DUCTILE IRON AND PVC WATER PIPES	REVISED	DETAIL NO.
303–2	MARICOPA ASSOCIATION of GOVERNMENTS ENGLISH		01–01–2019	303–2

M.A.G. STANDARD DETAIL #303-2

N.T.S. | B

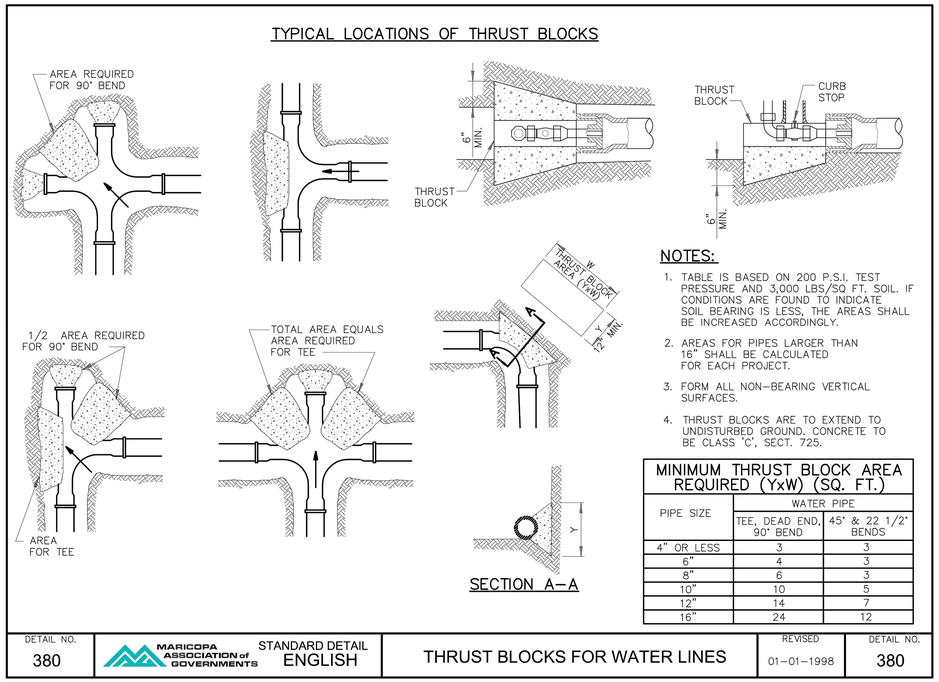

NOTES:

1. TABLE IS BASED ON 200 P.S.I. TEST PRESSURE AND 3,000 LBS/SQ FT. SOIL. IF CONDITIONS ARE FOUND TO INDICATE SOIL BEARING IS LESS, THE AREAS SHALL BE INCREASED ACCORDINGLY.
2. AREAS FOR PIPES LARGER THAN 16" SHALL BE CALCULATED FOR EACH PROJECT.
3. FORM ALL NON–BEARING VERTICAL SURFACES.
4. THRUST BLOCKS ARE TO EXTEND TO UNDISTURBED GROUND. CONCRETE TO BE CLASS 'C', SECT. 725.

MINIMUM THRUST BLOCK AREA REQUIRED (YxW) (SQ. FT.)

PIPE SIZE	WATER PIPE	
	TEE, DEAD END, 90° BEND	45° & 22 1/2° BENDS
4" OR LESS	3	3
6"	4	3
8"	6	3
10"	10	5
12"	14	7
16"	24	12

DETAIL NO.	STANDARD DETAIL	THRUST BLOCKS FOR WATER LINES	REVISED	DETAIL NO.
380	MARICOPA ASSOCIATION of GOVERNMENTS ENGLISH		01–01–1998	380

M.A.G. STANDARD DETAIL #380

N.T.S. | C

PIPE SIZE	MIN BAR SIZE	"A"–DIMENSION HOOK	MIN. * BLOCK DIM.
6"	#6	6"	3' x 3' x 3'
8"	#6	9"	4' x 4' x 2.5'
12"	#8	9"	4' x 4' x 5'

* FOR 125 P.S.I. WORKING PRESSURE.

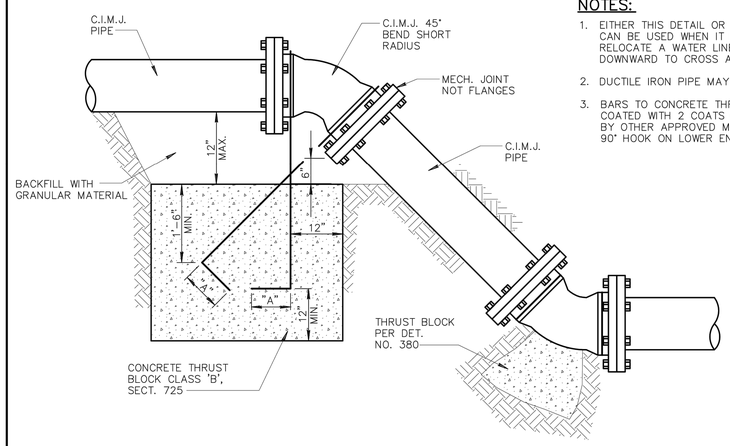

NOTES:

1. EITHER THIS DETAIL OR RESTRAINT RODS CAN BE USED WHEN IT IS ALLOWED TO RELOCATE A WATER LINE UPWARD OR DOWNWARD TO CROSS A CONFLICT.
2. DUCTILE IRON PIPE MAY BE USED.
3. BARS TO CONCRETE THRUST BLOCK TO BE COATED WITH 2 COATS COAL TAR, EPOXY OR BY OTHER APPROVED METHOD. BARS TO HAVE 90° HOOK ON LOWER END, AS PER TABLE.

DETAIL NO.	STANDARD DETAIL	ANCHOR BLOCKS FOR VERTICAL BENDS	REVISED	DETAIL NO.
381	MARICOPA ASSOCIATION of GOVERNMENTS ENGLISH		01–01–1998	381

M.A.G. STANDARD DETAIL #381

N.T.S. | D

NO	BY	DATE	REVISIONS	DATE	APP.

Registered Professional Engineer (Civil) CERTIFICATE NO. 70097 Timothy B. Pierce Signed 12/31/25 ARIZONA, U.S.A. Expires 12/31/28

PREPARED BY: PACE
DESIGNED BY: NE
DRAWN BY: DS, WW
CHECKED BY: TP
SCALE: AS NOTED
DATE: NOV 2025
JOB NO. B614

THESE DRAWINGS ARE THE PROPERTY OF P.A.C.E. AND SHALL NOT BE REPRODUCED IN ANY MANNER NOR BE USED FOR CONSTRUCTION UNLESS STAMPED 'ISSUED FOR CONSTRUCTION'.

TITLE: MECHANICAL DETAILS I

JOB: TOWN OF JEROME WASTEWATER TREATMENT PLANT — YAVAPAI CO. AZ

100% ISSUED FOR BID

PREPARED BY: TAYLOR B. PIERCE — DATE

PACE
Advanced Water Engineering
8723 E. Via de Ventura, Suite A-110, SCOTTSDALE, CA 85258
P: (480) 991-3995 | www.pacewater.com
R.C.E 70097

SHEET M8.0
46 OF 99 SHEETS

JOB NO. B614

W:\B614\Engineering\B614-3\sheets\B614 - M8.0 MECHANICAL DETAILS.dwg - Tab: M8.0 - by maddington on 02/23/26 at 12:41:49 PM

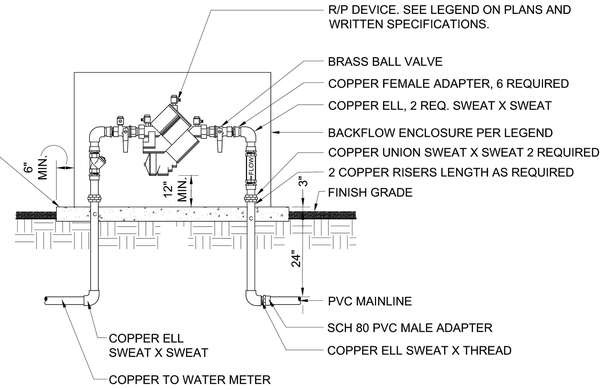

NOTES:

1. IF WYE STRAINER OR PRESSURE REGULATOR IS SPECIFIED, INSTALL ON EITHER THE HORIZONTAL PIPING OR ON THE DOWNSTREAM LEG AS SPACE PERMITS.
2. BALL VALVES SHALL INCLUDE STAINLESS STEEL HANDLES.
3. AFTER INSTALL, BACKFLOW REQUIRES APPROVAL/CERTIFICATION THROUGH THE FOUNDATION FOR CROSS-CONNECTION CONTROL AND HYDRAULIC RESEARCH (USC), OR A THIRD-PARTY CERTIFYING ENTITY THAT IS UNRELATED TO THE PRODUCT'S MANUFACTURER OR VENDOR, THAT IS APPROVED BY THE ARIZONA DEPARTMENT OF ENVIRONMENTAL QUALITY.

DETAIL NO.			REVISED	DETAIL NO.
611-1	MARICOPA ASSOCIATION of GOVERNMENTS STANDARD DETAIL ENGLISH	BACKFLOW PREVENTER ASSEMBLY (2" DIA. & SMALLER)	01-01-2023	611-1

M.A.G. STANDARD DETAIL #611-1

N.T.S. | A

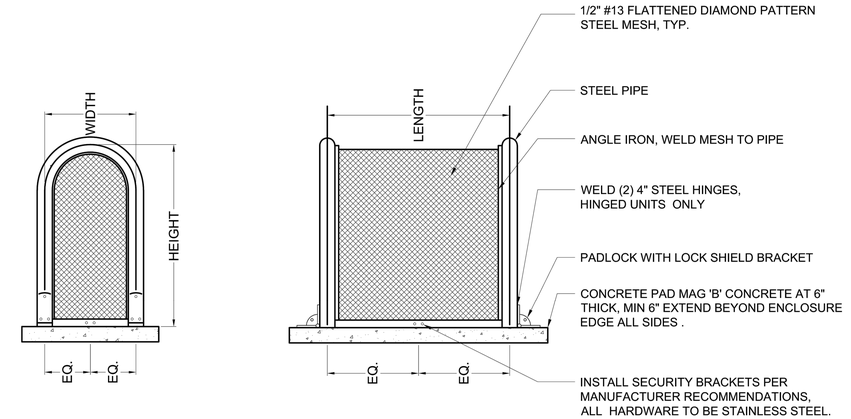

NOTES:

1. ENCLOSURE SHALL BE POWDER COATED BY MANUFACTURER.
2. SEE LEGEND FOR REQUIRED SIZE & COLOR.
3. CONTRACTOR SHALL SUPPLY CONCRETE PAD.

CENTERLINE DIMENSIONS	TYPE
12"W X 18"H X 12"L	LIFT OFF UNIT
12"W X 24"H X 24"L	LIFT OFF UNIT
12"W X 24"H X 32"L	LIFT OFF UNIT
12"W X 24"H X 42"L	HINGED UNIT
12"W X 30"H X 42"L	HINGED UNIT
18"W X 30"H X 48"L	HINGED UNIT

DETAIL NO.			REVISED	DETAIL NO.
611-3	MARICOPA ASSOCIATION of GOVERNMENTS STANDARD DETAIL ENGLISH	ENCLOSURE CAGE FOR BACKFLOW PREVENTER	01-01-2023	611-3

M.A.G. STANDARD DETAIL #611-3

N.T.S. | B

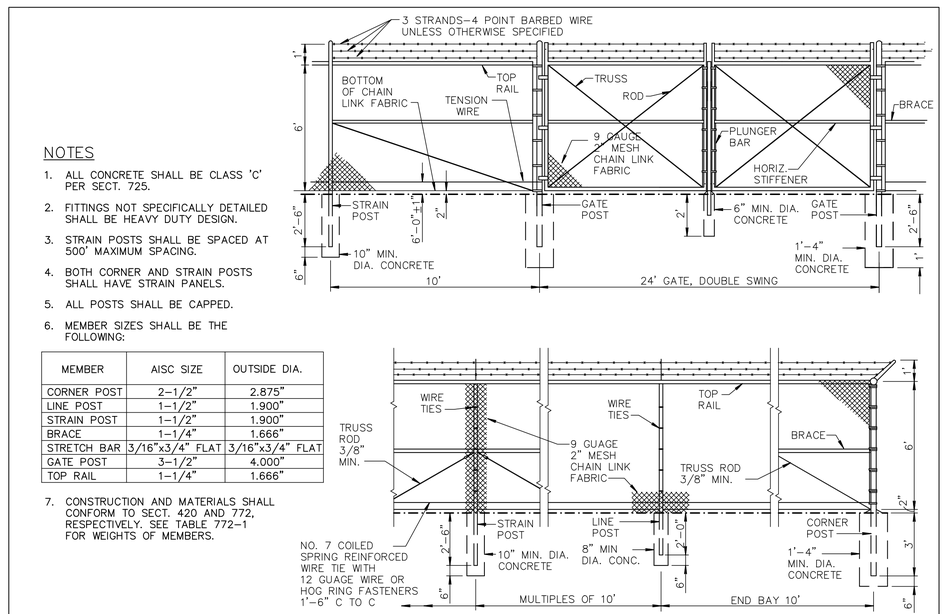

NOTES

1. ALL CONCRETE SHALL BE CLASS 'C' PER SECT. 725.
2. FITTINGS NOT SPECIFICALLY DETAILED SHALL BE HEAVY DUTY DESIGN.
3. STRAIN POSTS SHALL BE SPACED AT 500' MAXIMUM SPACING.
4. BOTH CORNER AND STRAIN POSTS SHALL HAVE STRAIN PANELS.
5. ALL POSTS SHALL BE CAPPED.
6. MEMBER SIZES SHALL BE THE FOLLOWING:

MEMBER	AISC SIZE	OUTSIDE DIA.
CORNER POST	2-1/2"	2.875"
LINE POST	1-1/2"	1.900"
STRAIN POST	1-1/2"	1.900"
BRACE	1-1/4"	1.666"
STRETCH BAR	3/16"x3/4" FLAT	3/16"x3/4" FLAT
GATE POST	3-1/2"	4.000"
TOP RAIL	1-1/4"	1.666"

7. CONSTRUCTION AND MATERIALS SHALL CONFORM TO SECT. 420 AND 772, RESPECTIVELY. SEE TABLE 772-1 FOR WEIGHTS OF MEMBERS.

DETAIL NO.			REVISED	DETAIL NO.
160	MARICOPA ASSOCIATION of GOVERNMENTS STANDARD DETAIL ENGLISH	6' CHAIN LINK FENCE AND GATE	01-01-2013	160

M.A.G. STANDARD DETAIL #160

N.T.S. | C

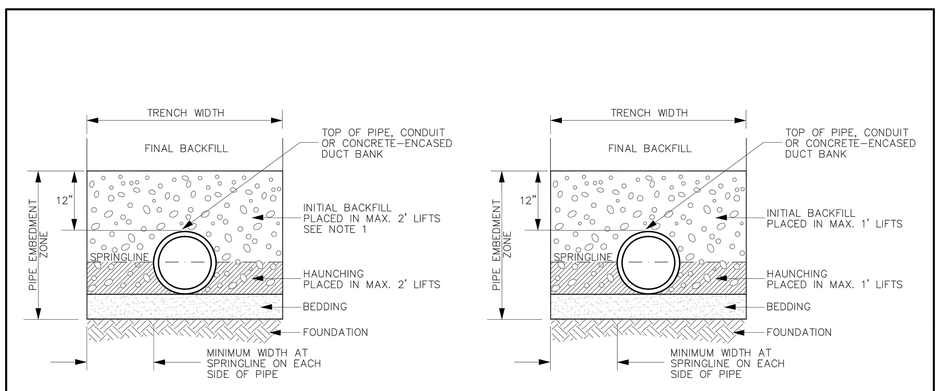

TRENCH-CROSS SECTION DETAIL
RIGID PIPE

TRENCH-CROSS SECTION DETAIL
FLEXIBLE PIPE

NOTES:

1. BEDDING, HAUNCHING AND INITIAL BACKFILL MATERIAL SHALL BE ABC PER SECTION 702. SEE SECTION 601 FOR ALTERNATIVE MATERIALS TO BE USED WITH AGENCY APPROVAL INCLUDING MAXIMUM 1-1/2" NATIVE MATERIAL FOR CONCRETE PIPE INITIAL BACKFILL.
2. SEE SECTION 601 FOR ADDITIONAL TRENCH WIDTH, EXCAVATION, BACKFILLING AND COMPACTION REQUIREMENTS.
3. SEE SECTION 601 FOR PIPE MATERIALS CONSIDERED AS RIGID OR FLEXIBLE.

DETAIL NO.			REVISED	DETAIL NO.
200-3	MARICOPA ASSOCIATION of GOVERNMENTS STANDARD DETAIL ENGLISH	TRENCH BACKFILL AND SURFACE REPLACEMENT	01-01-2023	200-3

M.A.G. STANDARD DETAIL #200-3

N.T.S. | D

NO	BY	DATE	REVISIONS	DATE	APP.

Registered Professional Engineer (Civil) CERTIFICATE NO. 70097 TAYLOR B. PIERCE Signed ARIZONA, U.S.A. Expires 12/31/28

THESE DRAWINGS ARE THE PROPERTY OF P.A.C.E. AND SHALL NOT BE REPRODUCED IN ANY MANNER NOR BE USED FOR CONSTRUCTION UNLESS STAMPED 'ISSUED FOR CONSTRUCTION'.

PREPARED BY: PACE
DESIGNED BY: NE
DRAWN BY: DS, WW
CHECKED BY: TP
SCALE: AS NOTED
DATE: NOV 2025
JOB NO.: B614

TITLE: MECHANICAL DETAILS II

JOB: TOWN OF JEROME WASTEWATER TREATMENT PLANT — YAVAPAI CO. AZ

100% ISSUED FOR BID

PREPARED BY: TAYLOR B. PIERCE R.C.E 70097 DATE

PACE
Advanced Water Engineering
8721 E. Via de Ventura, Suite F-110, SCOTTSDALE, CA 85258
P: (480) 991-3595 | www.pacewater.com

SHEET M8.1
47 OF 99 SHEETS

JOB NO. B614

W:\B614\Engineering\B614-30sheets\B614 - M8.0 MECHANICAL DETAILS.dwg - Tab: M8.1 - by maddingtonon 02/23/26 at 12:41:49 PM

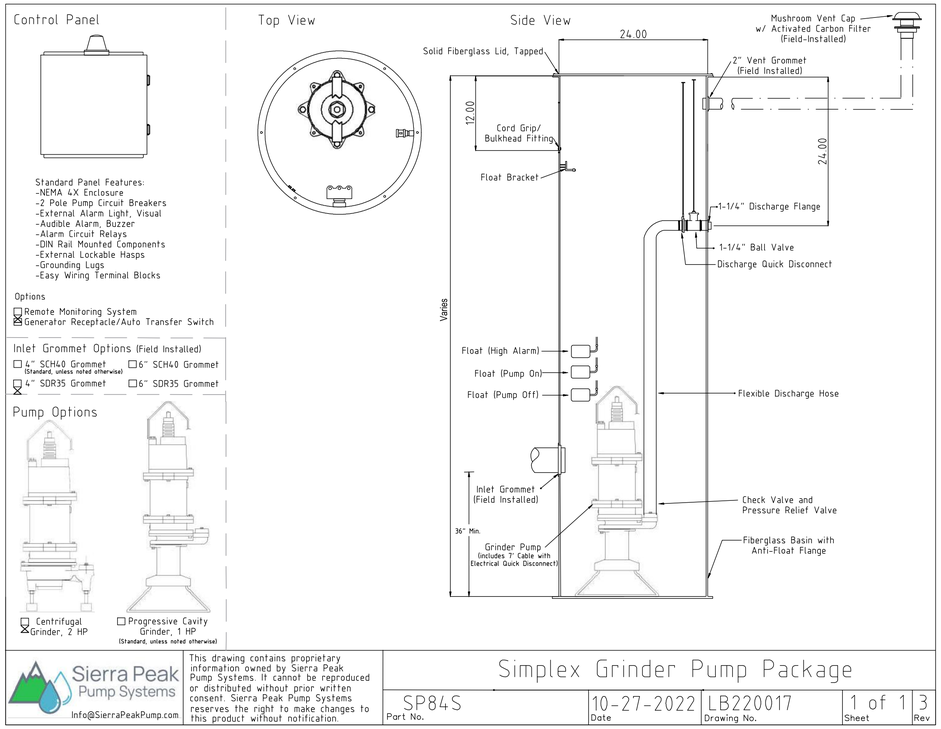

OVERFLOW LIFT STATION / OR EQUAL

N.T.S. | A

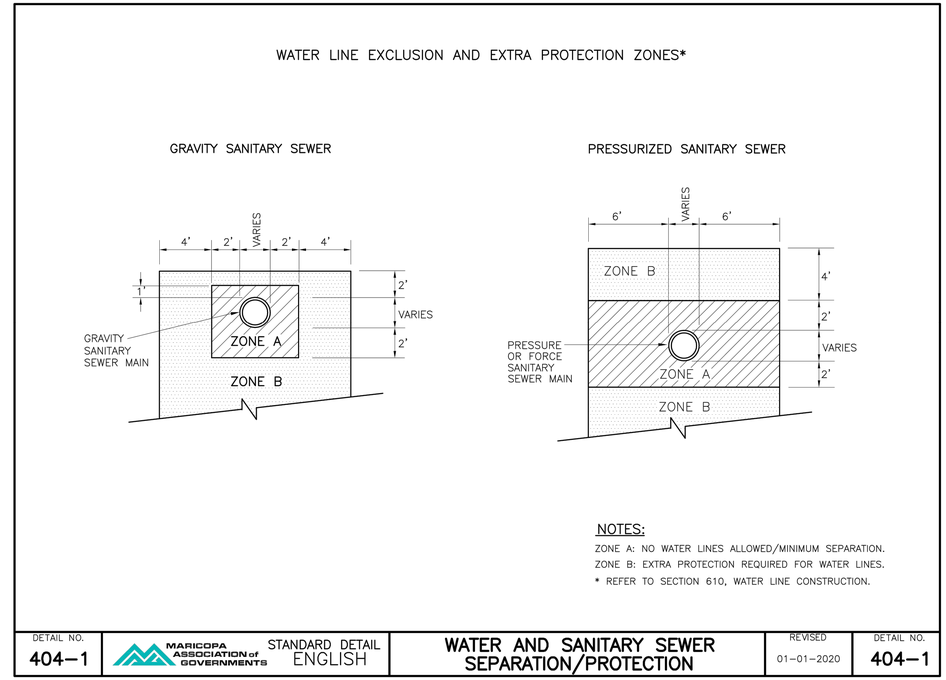

M.A.G. STANDARD DETAIL #404-1

N.T.S. | B

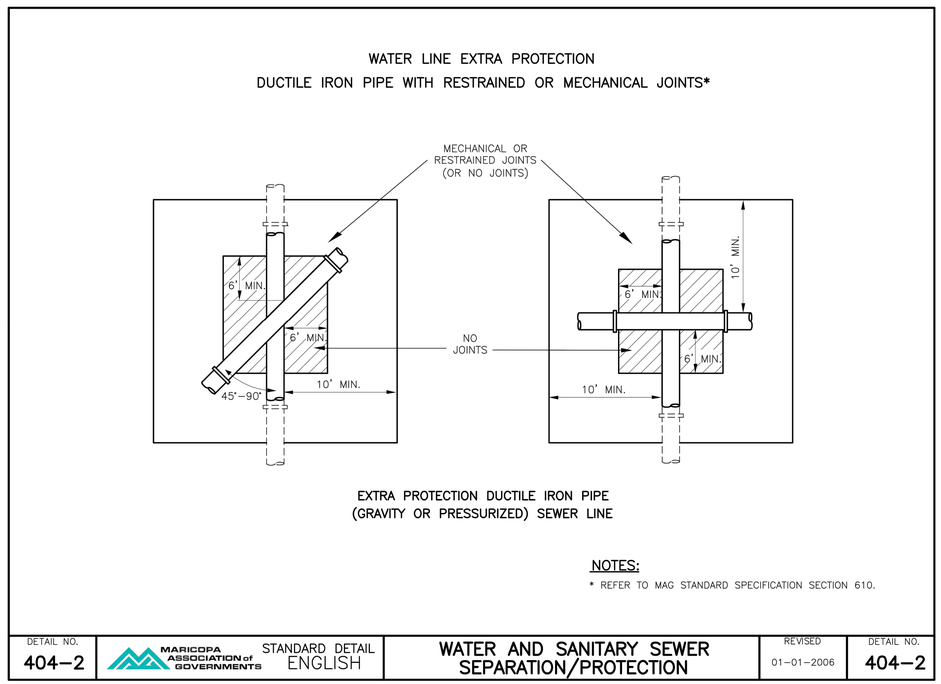

M.A.G. STANDARD DETAIL #404-2

N.T.S. | C

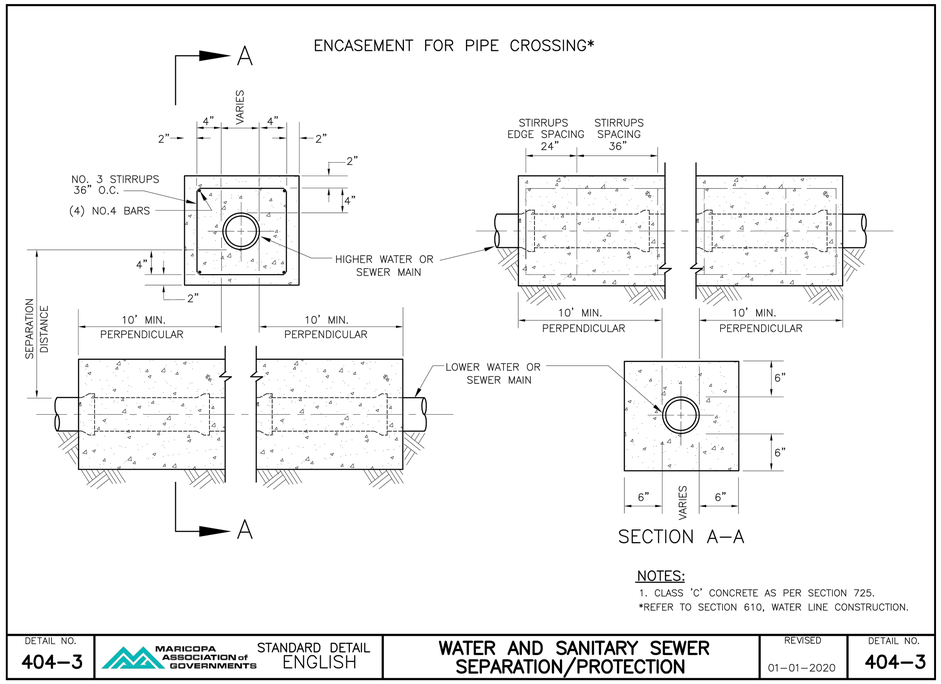

M.A.G. STANDARD DETAIL #404-3

N.T.S. | D

NO	BY	DATE	REVISIONS	DATE	APP.

Registered Professional Engineer (Civil) CERTIFICATE NO. 70097 Timothy B. Pierce Signed 12/31/25 ARIZONA, U.S.A. Expires 12/31/28

PREPARED BY: PACE
DESIGNED BY: NE
DRAWN BY: DS, WW
CHECKED BY: TP
SCALE: AS NOTED
DATE: NOV 2025
JOB NO.: B614

THESE DRAWINGS ARE THE PROPERTY OF P.A.C.E. AND SHALL NOT BE REPRODUCED IN ANY MANNER NOR BE USED FOR CONSTRUCTION UNLESS STAMPED 'ISSUED FOR CONSTRUCTION'.

TITLE: MECHANICAL DETAILS III

JOB: TOWN OF JEROME WASTEWATER TREATMENT PLANT YAVAPAI CO. AZ

100% ISSUED FOR BID

PREPARED BY: TAYLOR B. PIERCE R.C.E 70097 DATE
PACE
Advanced Water Engineering
8723 E. Via de Commercio, Suite 1001 | SCOTTSDALE, CA 85258
P: (480) 991-3595 | www.pacewater.com

SHEET M8.2
48 OF 99 SHEETS

JOB NO. B614

W:\B614\Engineering\B614-30sheets\B614 - M8.0 MECHANICAL DETAILS.dwg - Tab: M8.2 - by naddington on 02/23/26 at 12:41:49 PM

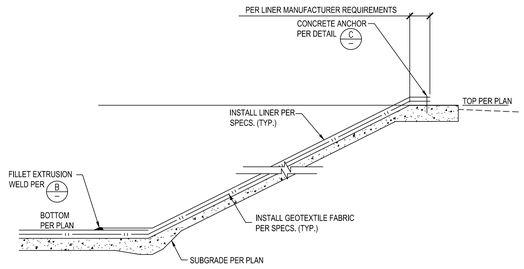

TYPICAL LINER SECTION 1"=1'-0" A

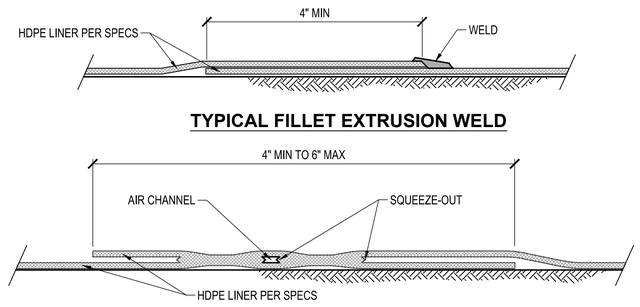

WELD DETAIL N.T.S. B

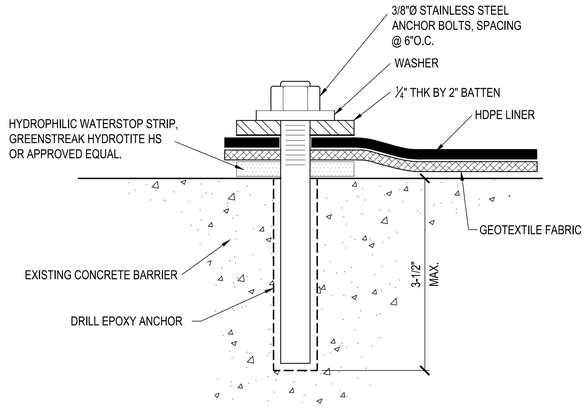

CONCRETE ANCHOR 1"=1'-0" C

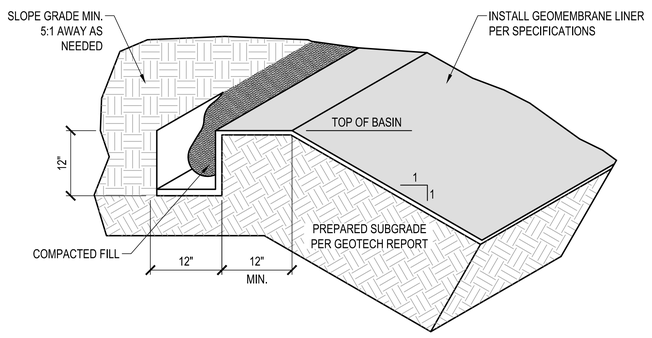

ANCHOR TRENCH N.T.S. D

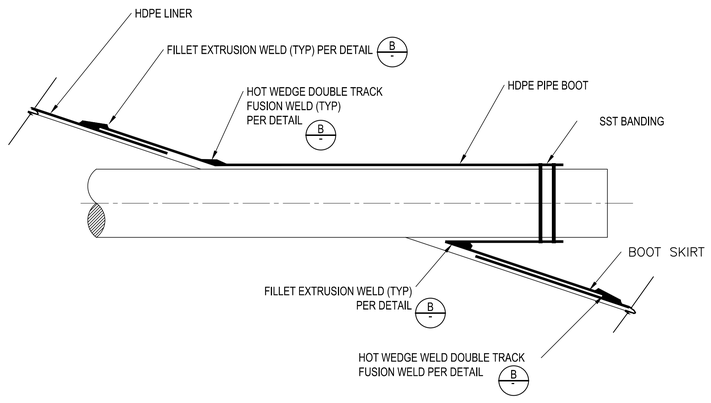

PIPE BOOT 1" = 1'-0" E

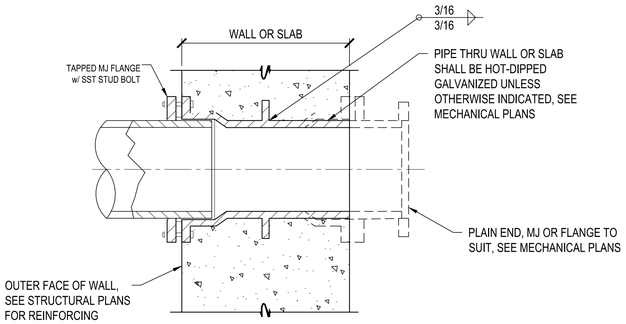

NOTE:
COAT PIPE WITH SPECIFIED PAINT SYSTEM PRIOR TO CONCRETE PLACEMENT

MECHANICAL JOINT WALL SLEEVE F

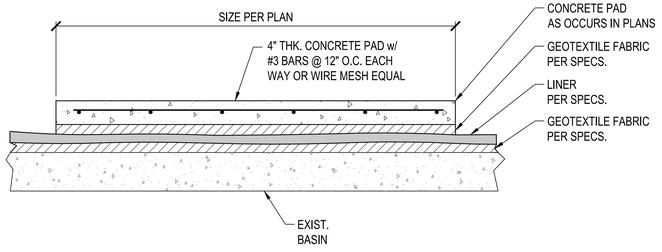

CONCRETE PAD OVER LINER 1"=1'-0" G

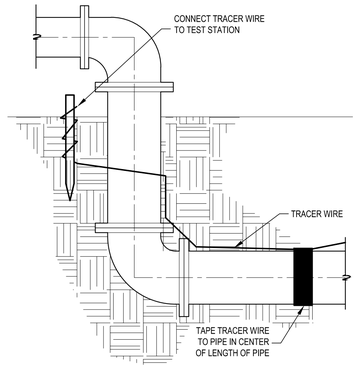

TRACER WIRE N.T.S. H

CONSTRUCTION NOTES

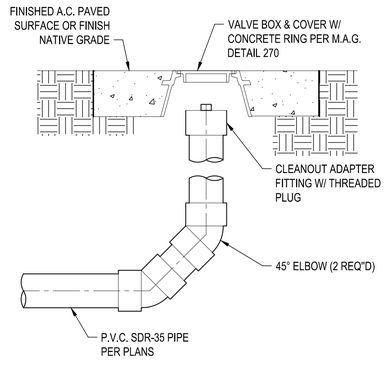

1. INSTALL CONCRETE COLLAR, CONTRACTOR SHALL CONTAIN A MIN. OF 6 1/2 SACKS OF CEMENT PER CUBIC YARD & ATTAIN A COMPRESSIVE STRENGTH OF 4,500 P.S.I. AFTER 28 DAYS IN ACCORDANCE W/ A.S.T.M. C39/C39M-99
2. INSTALL 6" SDR-35 P.V.C. PIPE & ELBOW FOR HEADER PIPE CLEANOUT. INSTALL 4" SDR-35 P.V.C. PIPE FOR PERFORATED PIPELINE CLEANOUT

NOTE:
CLEANOUT RING & COVER SHALL BE RAISED TO FINISH GRADE & SUPPORT COLLAR INSTALLED AFTER PAVING OR FINISH GRADING HAS BEEN COMPLETED. CONTRACTOR SHALL COMPACT THE AREA UNDER CONCRETE COLLAR TO THE SATISFACTION OF THE ENGINEER BEFORE PLACING CONCRETE.

CLEANOUT N.T.S. I

100% ISSUED FOR BID

NO	BY	DATE	REVISIONS	DATE	APP.

Registered Professional Engineer (Civil) CERTIFICATE NO. 70097 TAYLOR B. PIERCE Signed ARIZONA, U.S.A. Expires 12/31/28

PREPARED BY: PACE
DESIGNED BY: NE
DRAWN BY: DS, WW
CHECKED BY: TP
SCALE: AS NOTED
DATE: NOV 2025
JOB NO.: B614

THESE DRAWINGS ARE THE PROPERTY OF P.A.C.E. AND SHALL NOT BE REPRODUCED IN ANY MANNER NOR BE USED FOR CONSTRUCTION UNLESS STAMPED 'ISSUED FOR CONSTRUCTION'.

TITLE
MECHANICAL DETAILS IV

JOB
TOWN OF JEROME
WASTEWATER
TREATMENT PLANT
YAVAPAI CO. AZ

PREPARED BY:
PACE
Advanced Water Engineering
8723 E. Via de Commercio, Suite 2, SCOTTSDALE, CA 85258
P: (480) 991-3995 | www.paceaz.com
TAYLOR B. PIERCE R.C.E 70097 DATE

SHEET
M8.3
49 OF 99 SHEETS

JOB NO. B614

W:\B614\Engineering\B614-30\sheets\B614 - M8.0 MECHANICAL DETAILS.dwg - Tab: M8.3 - by nsddrigton on 02/23/26 at 12:41:49 PM

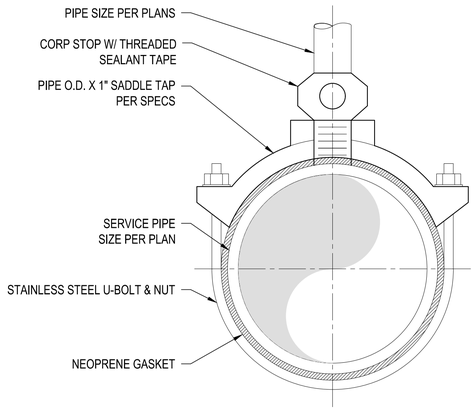

SADDLE TAP

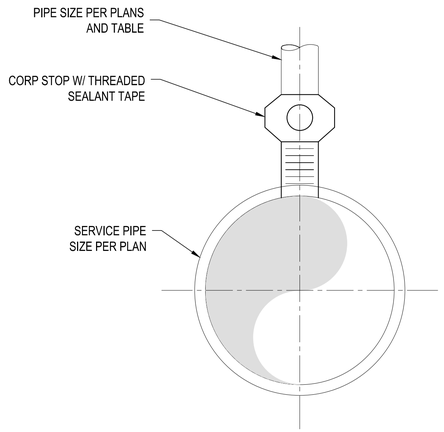

DIRECT TAP

SIZE (in.)	PRESSURE CLASS				
	150	200	250	300	350
	MAXIMUM RECOMMENDED DIRECT TAP SIZE (inch)				
3	-	-	-	-	3/4
4	-	-	-	-	3/4
6	-	-	-	-	1
8	-	-	-	-	1
10	-	-	-	-	1
12	-	-	-	-	1 1/4
14	-	-	1 1/4	1 1/2	1 1/2
16	-	-	1 1/2	2	2
18	-	-	2	2	2
20	-	-	2	2	2
24	-	2	2	2	2

PIPE TAP

N.T.S. **A**

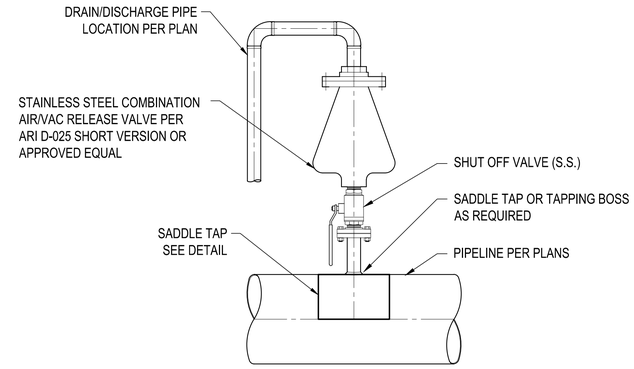

AIR/VAC RELEASE VALVE

N.T.S. **B**

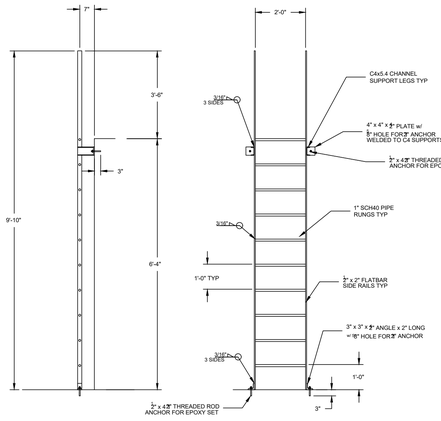

NOTES:

1. ALL MATERIALS SHALL BE CARBON STEEL.
2. ALL MATERIALS TO BE SHOP PRIMED W/ CARBOLINE 150 AFTER FABRICATION.

SHIP LADDER

N.T.S. **C**

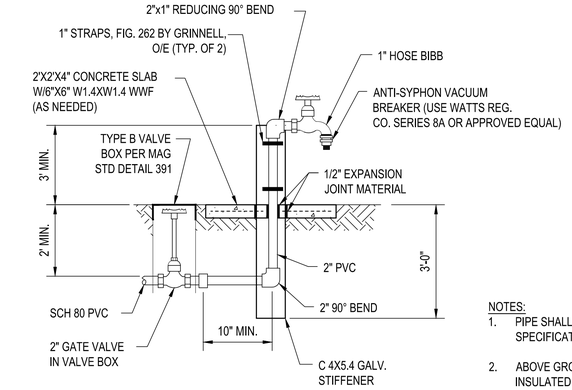

NOTES:

1. PIPE SHALL BE COLOR-CODED PER SPECIFICATIONS
2. ABOVE GROUND PIPING SHALL BE INSULATED PER SPECIFICATIONS. EXTEND INSULATION TO 12" BELOW GROUND.

HOSE BIB

N.T.S. **D**

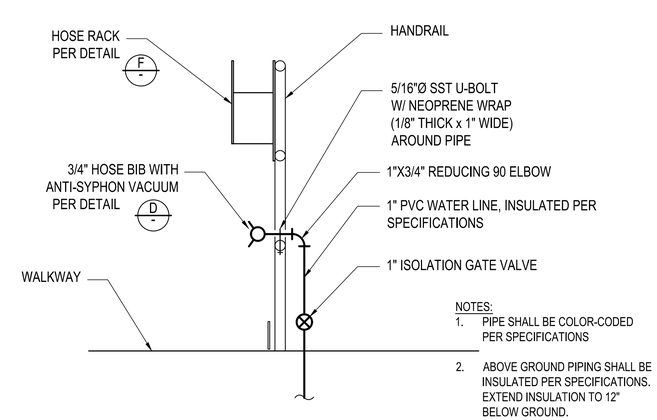

NOTES:

1. PIPE SHALL BE COLOR-CODED PER SPECIFICATIONS
2. ABOVE GROUND PIPING SHALL BE INSULATED PER SPECIFICATIONS. EXTEND INSULATION TO 12" BELOW GROUND.

RAIL MOUNTED HOSE VALVE

N.T.S. **E**

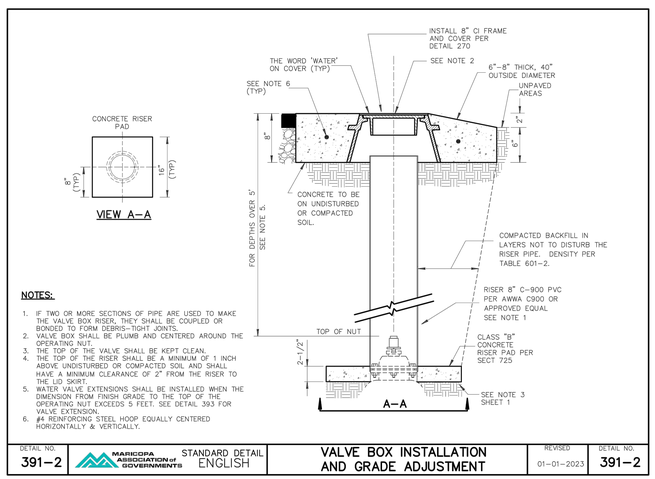

NOTES:

1. IF TWO OR MORE SECTIONS OF PIPE ARE USED TO MAKE THE VALVE BOX RISER, THEY SHALL BE COUPLED OR BONDED TO FORM DEBRIS-TIGHT JOINTS.
2. VALVE BOX SHALL BE PLUMB AND CENTERED AROUND THE OPERATING NUT.
3. THE TOP OF THE VALVE SHALL BE KEPT CLEAN.
4. THE TOP OF THE RISER SHALL BE A MINIMUM OF 1 INCH ABOVE UNDISTURBED OR COMPACTED SOIL AND SHALL HAVE A MINIMUM CLEARANCE OF 2" FROM THE RISER TO THE LID SKIRT.
5. WATER VALVE EXTENSIONS SHALL BE INSTALLED WHEN THE DIMENSION FROM FINISH GRADE TO THE TOP OF THE OPERATING NUT EXCEEDS 5 FEET. SEE DETAIL 393 FOR VALVE EXTENSION.
6. #4 REINFORCING STEEL HOOP EQUALLY CENTERED HORIZONTALLY & VERTICALLY.

DETAIL NO.	STANDARD DETAIL		REVISED	DETAIL NO.
391–2	MARICOPA ASSOCIATION of GOVERNMENTS	VALVE BOX INSTALLATION AND GRADE ADJUSTMENT	01–01–2023	391–2

VALVE BOX

N.T.S. **F**

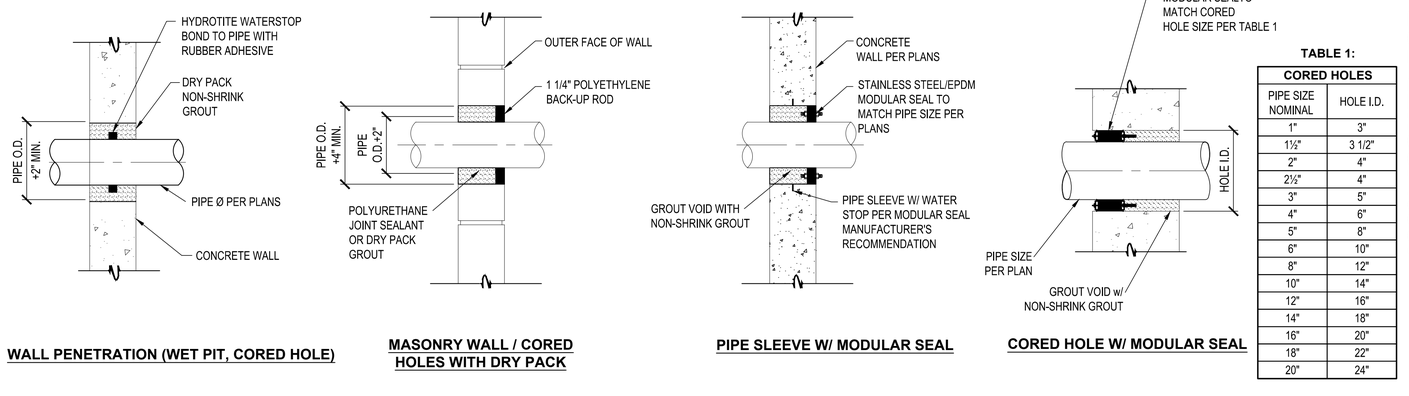

TABLE 1:

CORED HOLES	
PIPE SIZE NOMINAL	HOLE I.D.
1"	3"
1½"	3 1/2"
2"	4"
2½"	4"
3"	5"
4"	6"
5"	8"
6"	10"
8"	12"
10"	14"
12"	16"
14"	18"
16"	20"
18"	22"
20"	24"

PIPE PENETRATION DETAIL

N.T.S. **G**

100% ISSUED FOR BID

PREPARED BY: TAYLOR B. PIERCE R.C.E 70097 DATE

PACE
Advanced Water Engineering
8723 E. Via de Ventura, Suite 220, Scottsdale, CA 85258
P: (480) 991-3595 | www.pacewater.com

JOB: TOWN OF JEROME WASTEWATER TREATMENT PLANT YAVAPAI CO. AZ

TITLE: MECHANICAL DETAILS V

SHEET M8.4

50 OF 99 SHEETS

JOB NO. B614

NO	BY	DATE	REVISIONS	DATE	APP.

Registered Professional Engineer (Civil) CERTIFICATE NO. 70097 Timothy B. Pierce Signed 12/31/25 ARIZONA, U.S.A. Expires 12/31/28

PREPARED BY: PACE | DESIGNED BY: NE | DRAWN BY: DS, WW | CHECKED BY: TP | SCALE: AS NOTED | DATE: NOV 2025 | JOB NO.: B614

THESE DRAWINGS ARE THE PROPERTY OF P.A.C.E. AND SHALL NOT BE REPRODUCED IN ANY MANNER NOR BE USED FOR CONSTRUCTION UNLESS STAMPED 'ISSUED FOR CONSTRUCTION'.

W:\B614\Engineering\B614-Sheets\B614 - M8.0 MECHANICAL DETAILS.dwg - Tab: M8.4 - by reddington on 02/22/26 at 12:41:49 PM

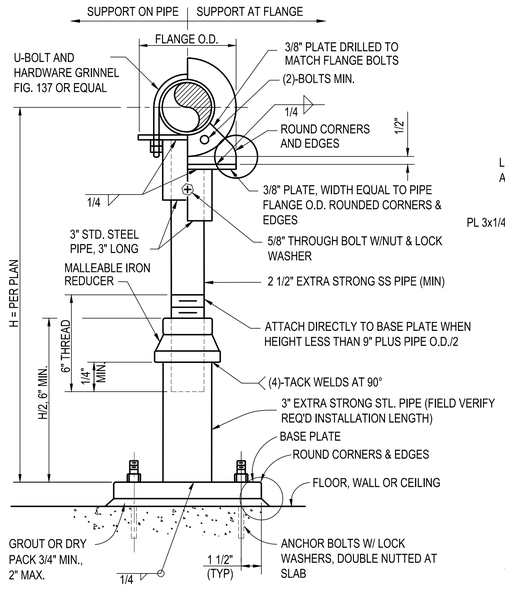

LOCATION	MEMBER	
	BASE PLATE	ANCHOR BOLTS
FLOOR	3/8 X 9 X 9	4-5/8"
CEILING	5/8 X 9 X 9	4-3/4"
WALL	5/8 X 9 X 9	4-3/4"

NOTES:
1. AS AN ALTERNATE, IF ADJUSTMENT IS NOT NECESSARY, DELETE 2 1/2" PIPE AND REDUCER AND WELD 3" STEEL PIPE DIRECTLY TO 3/8" PLATE ATTACHED TO PIPE FLANGE.
2. PIPE SUPPORT MAY BE ORIENTATED IN ANY DIRECTION.
3. FOR H > 3'-0", CONTRACTOR SHALL USE GRINNELL FIG. 264 AS APPROVED BY ENGINEER.

S1

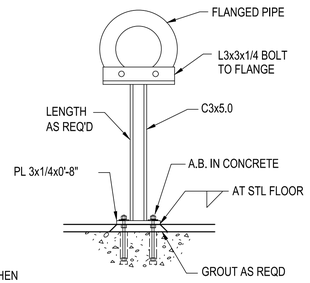

S2

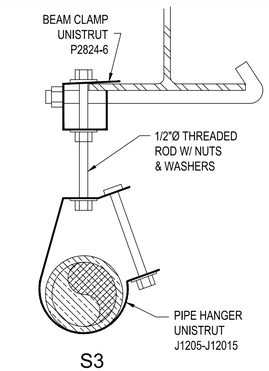

S3

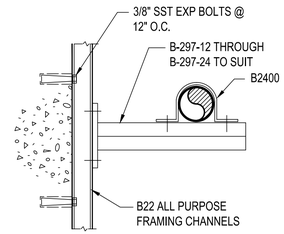

S4

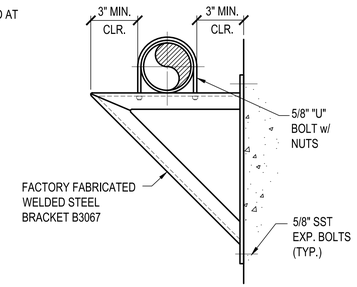

S5

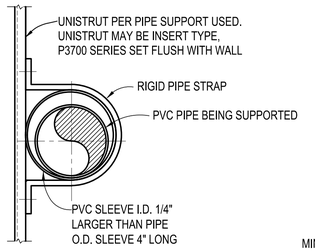

S6

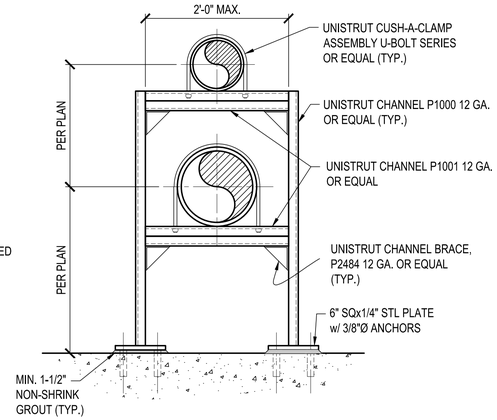

S7

GENERAL NOTES:

1. WHERE NO REFERENCE TO PIPE HANGERS OR SUPPORTS IS GIVEN ON THE DRAWINGS, THE CONTRACTOR SHALL USE THE APPROPRIATE HANGER OR SUPPORT SHOWN ON THIS DRAWING. MAXIMUM HANGER AND SUPPORT SPACING SHALL BE AS SHOWN IN SCHEDULE "A" ON THIS DRAWING. FIGURE NUMBERS ARE B-LINE, UNISTRUT OR GRINNELL.
2. ALL CONCRETE INSERTS, BRACKETS, CHANNELS, BOLTS, RODS, AND MISCELLANEOUS HARDWARE USED FOR PIPE HANGERS OR SUPPORTS SHALL BE 316 S.S., U.N.O.
3. CONCRETE CONTINUOUS INSERTS, B-LINE SERIES B52i, OR EQUAL, SHALL BE PROVIDED IN THE WALLS AND CEILINGS AS REQ'D OR AS NOTED ON THE DRAWINGS. INSERTS IN THE WALLS SHALL BE VERTICAL, UNLESS OTHERWISE NOTED AND SHALL BEGIN 6 INCHES ABOVE THE FLOOR AND END 6 INCHES BELOW THE CEILING. INSERTS IN THE CEILING SHALL BEGIN AND END 3 INCHES FROM WALLS AND BEAMS, WHERE PRACTICABLE. THE CENTERLINES OF WALL AND CEILING INSERTS SHALL ALIGN. MAXIMUM CENTER TO ENTER SPACING OF INSERTS SHALL BE 5'-0".
4. IN AREAS NOT COVERED UNDER NOTE 3, CONCRETE INSERTS SHALL BE B-LINE SERIES B3014N WITH APPROPRIATE NUT, B-LINE SERIES B521i CHANNEL EMBEDDED ANCHOR BOLTS, OR EQUAL. IN WITHOUT THE PRIOR WRITTEN APPROVAL OF THE ENGINEER (FOR EQUIPMENT LIFTING DEVICES, (SEE STRUCTURAL DRAWINGS).
5. SUPPORTS SHALL MEET MANUFACTURERS STANDARDIZATION SOCIETY OF THE VALVE AND FITTINGS INDUSTRY STANDARD PRACTICE SP58, LATEST EDITION.
6. HANGER BRACKET AND SUPPORT COMPONENTS MAY BE INTERCHANGED AS APPROVED BY THE ENGINEER.
7. TRAPEZE AND PIPE RACK COMPONENTS SHALL HAVE A MINIMUM STEEL THICKNESS OF 12 GAUGE. MAXIMUM DEFLECTION SHALL BE LIMITED TO 1/240 OF THE SPAN. CHANNEL COMPONENTS SHALL BE B-LINE SERIES B22 OR B22A, OR EQUAL.
8. CONCRETE INSERTS IN AREAS BELOW WATER SURFACE OR NORMALLY SUBJECT TO SUBMERGING SHALL BE EMBEDDED ANCHOR BOLTS, OR APPROVED EQUAL. IN NO CASE SHALL CONCRETE CONTINUOUS INSERTS BE USED IN THESE AREAS.
9. ALL PIPING, DUCTWORK, ACCESSORIES, APPURTENANCES, ETC. SHALL BE ANCHORED TO RESIST 200% OF THE APPLIED LOAD & A LATERAL SEISMIC FORCE OF 40 PERCENT OF ITS WEIGHT WITHOUT EXCESSIVE DEFLECTION.
10. CONTRACTOR SHALL VERIFY ALL SUPPORT DIMENSIONS AND LOCATIONS WITH APPROVED SHOP DRAWINGS FOR ITEMS BEING SUPPORTED BEFORE FABRICATION OR INSTALLATION OF SUPPORTS.

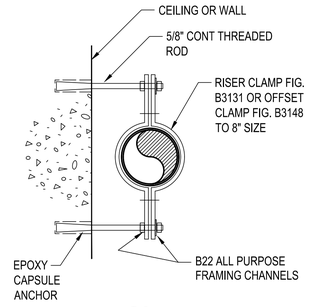

S8

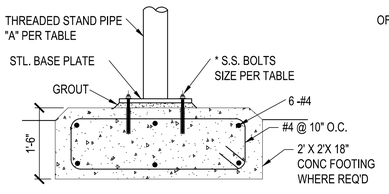

DIMENSIONS				
PIPE Ø SIZE	BOLT SIZE	STAND PIPE "A"	ADJ. PIPE "B"	FLANGE SUPPORT PLATE THK. "C"
4-12	1/2	3"	2 1/2"	1/4"
14-16	5/8	4"	3"	3/8"
18-36	7/8	6"	4"	3/8"

INSTALLATION NOTE:
PIPE SUPPORT SPACING, MATERIAL AND QUANTITY PER SPECS.

* BOLT EMBEDMENT DEPTH PER TABLE HEREON.

S1A

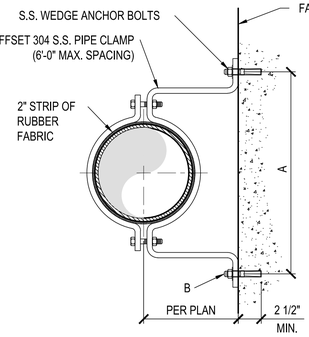

DIMENSIONS			
PIPE SIZE	A	HOLE SIZE B	BOLT SIZE
3	9 1/2	7/16	3/8
4	10 9/16	9/16	1/2
5	11 11/16	9/16	1/2
6	14 3/8	9/16	1/2
8	16 7/16	9/16	1/2
10	21 1/2	13/16	3/4
12	24 7/8	13/16	3/4
18	31	13/16	3/4
24	37	1 11/16	1

S9

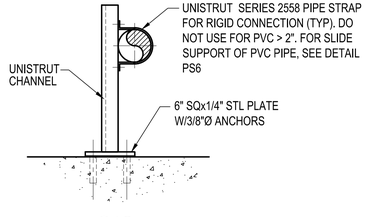

S12

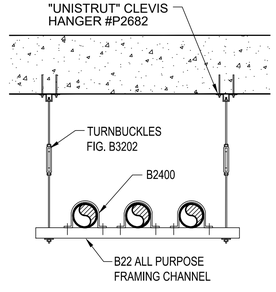

S10

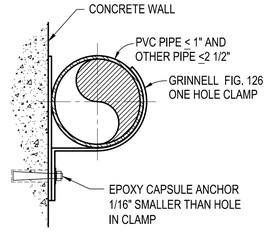

S11

SCHEDULE "A"

PIPE HANGER RODS AND SUPPORT SPACING

PIPE SIZE	ROD SIZE (INCHES)	MAX. SPAN (FT.) STEEL PIPE	COPPER PIPE	PVC PIPE	DUCTILE IRON PIPE	FIBERGLASS
UP TO 1"	3/8	6	5	5	-	-
1 1/4" TO 2"	3/8	10	8	5.5	10	-
2 1/2" TO 3 1/2"	1/2	10	8	6	10	-
4" TO 5"	5/8	10	-	8	10	-
6"	3/4	10	-	9	10	-
8" TO 12"	7/8	10	-	9	10	-
ABOVE 12"	1	10	-	9	10	-

BOLT DIAMETER	VERT BOLT EMBEDMENT LENGTH	HORIZ BOLT EMBEDMENT LENGTH	HEADED STUD FILLET WELD SIZE, "S".
1/2"	6"	4"	1/4"
5/8"	6"	4"	5/16"
3/4"	7"	5"	5/16"
7/8"	8"	6"	5/16"
1"	9"	7"	3/8"
1 1/8"	10"	8"	-----
1 1/4"	11"	9"	-----

TYP. ANCHOR AND EXPANSION BOLT SCHEDULE

NO	BY	DATE	REVISIONS	DATE	APP.

Registered Professional Engineer (Civil) CERTIFICATE NO. 70097 Timothy Pierce Signed ARIZONA, U.S.A. Expires 12/31/28

PREPARED BY: PACE
DESIGNED BY: NE
DRAWN BY: DS, WW
CHECKED BY: TP
SCALE: AS NOTED
DATE: NOV 2025
JOB NO.: B614

THESE DRAWINGS ARE THE PROPERTY OF P.A.C.E. AND SHALL NOT BE REPRODUCED IN ANY MANNER NOR BE USED FOR CONSTRUCTION UNLESS STAMPED "ISSUED FOR CONSTRUCTION".

TITLE: **MECHANICAL DETAILS VI**

100% ISSUED FOR BID

JOB: TOWN OF JEROME WASTEWATER TREATMENT PLANT — YAVAPAI CO. AZ

PREPARED BY: TAYLOR B. PIERCE — R.C.E. 70097 — DATE

PACE
Advanced Water Engineering
8723 E. VIA de VENTURA, BLDG. B, SUITE 220 SCOTTSDALE, CA 85258
P: (480) 991-3955 | www.pacewater.com

SHEET **M8.5**
51 OF 99 SHEETS

JOB NO. B614

PIPE SUPPORT DETAILS

N.T.S. | A

W:\B614\Engineering\B614-30sheet\B614 - M8.0 MECHANICAL DETAILS.dwg - Tab: M8.5 - by neddington on 02/22/26 at 12:41:49 PM

GENERAL STRUCTURAL NOTES

APPLY UNLESS NOTED OTHERWISE

BUILDING CODE:

2012 EDITION OF THE INTERNATIONAL BUILDING CODE WITH TOWN OF JEROME AMENDMENTS.

LOADS:

ROOF LIVE LOAD = 20 PSF (REDUCIBLE).
TOTAL ROOF DEAD LOAD = 20 PSF.
GROUND SNOWLOAD = 20 PSF.
ROOF SNOW = 18.5 PSF.

WIND:

THE STRUCTURE AND ITS COMPONENTS ARE DESIGNED FOR WIND LOADS AS DEFINED BY THE BUILDING CODE, WHERE:

BASIC WIND SPEED 120 MPH.
RISK CATEGORY: III.
WIND EXPOSURE: C.
VELOCITY PRESSURE, qz = 23.7 PSF AT h = 12' FT. (MEAN ROOF HEIGHT). DESIGN WIND PRESSURES COMPONENTS AND CLADDING:

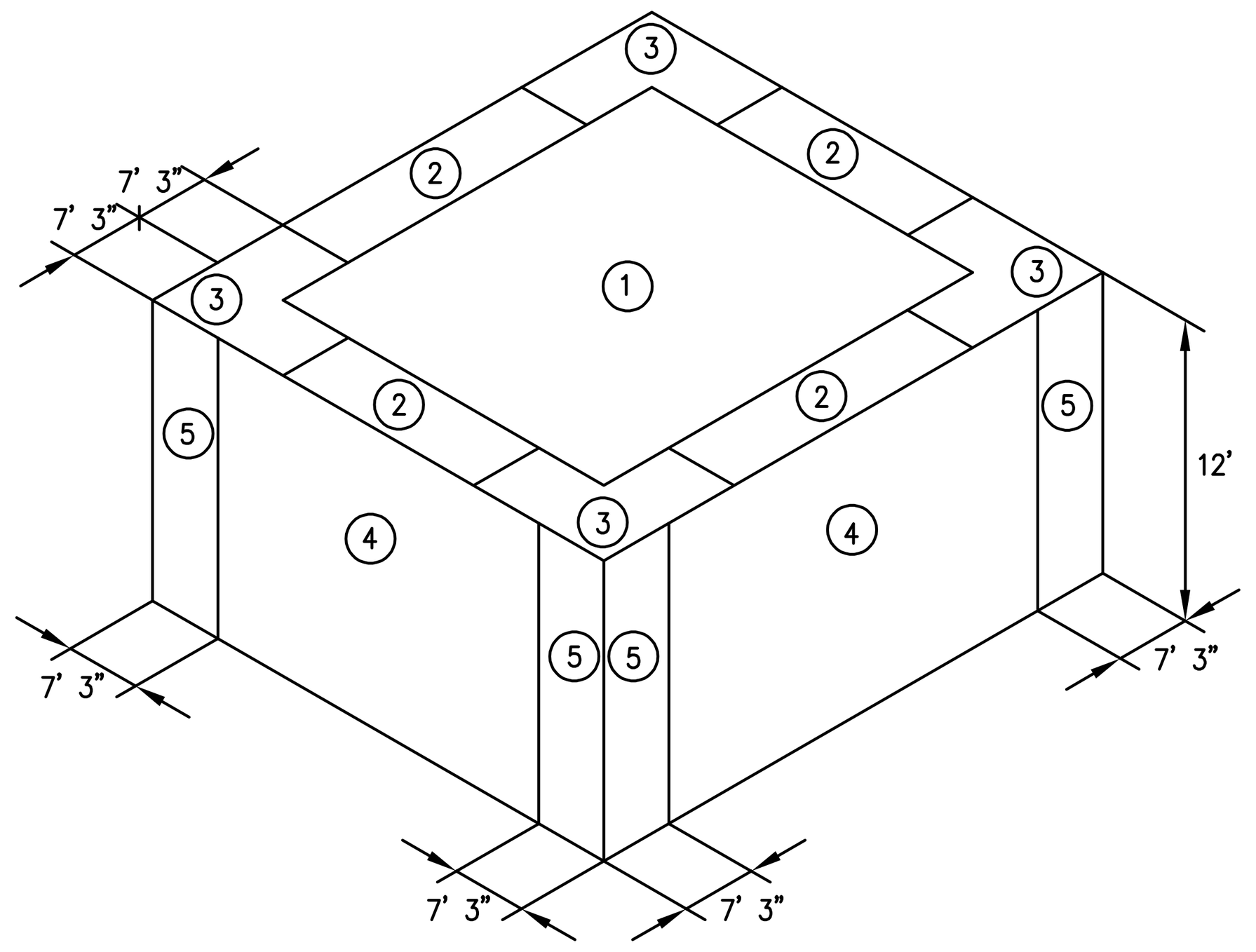

*PRESSURES SHOWN ARE ULTIMATE. MULTIPLY BY 0.6 FOR SERVICE LEVEL PRESSURES.

LOCATION	ZONE	EFFECTIVE WIND AREA (SF)	DESIGN WIND PRESSURE (PSF)*	
ROOF	1	10	+16.0	−54.9
		20	+16.0	−50.9
		50	+16.0	−45.6
		100	+16.0	−41.6
	2	10	+16.0	−74.2
		20	+16.0	−69.1
		50	+16.0	−62.3
		100	+16.0	−57.1
	3	10	+16.0	−103.3
		20	+16.0	−93.0
		50	+16.0	−79.4
		100	+16.0	−69.1
WALLS	4	10	+31.1	−30.4
		20	+29.1	−29.1
		50	+26.3	−27.2
		100	+24.2	−25.8
		500	+19.4	−22.6
	5	10	+31.1	−63.7
		20	+29.1	−58.1
		50	+26.3	−50.8
		100	+24.2	−45.2
		500	+19.4	−32.3
PARAPET	INTERIOR	10	+103.3	−58.1
		50	+88.6	−53.5
		100	+81.4	−50.0
	EXTERIOR	10	+132.4	−87.2
		50	+105.7	−77.0
		100	+93.3	−69.4

ZONE1: INTERIOR AREA OF ROOF AWAY FROM BUILDING EXTERIOR WALLS.
ZONE2: ROOF AREAS WITHIN 7'–3" OF EXTERIOR WALLS.
ZONE3: ROOF AREAS WITHIN 7'–3" OF BUILDING CORNERS.
ZONE4: EXTERIOR WALLS AWAY FROM BUILDING CORNERS.
ZONE5: EXTERIOR WALLS WITHIN 7'–3" OF BUILDING CORNERS.
–DESIGN WIND PRESSURES – PLUS AND MINUS SIGNS SIGNIFY PRESSURE ACTING TOWARD AND AWAY FROM EXTERIOR SURFACE.
–LINEAR INTERPOLATION BETWEEN VALUES OF TRIBUTARY AREA IS PERMISSIBLE.

SEISMIC:

RISK CATEGORY = III.
SEISMIC IMPORTANCE FACTOR: Ie = 1.25.
DESIGN CATEGORY = B.
SITE CLASS C.
SS = 0.31, S1 = 0.097, R = 3.5.
Sds = 0.269, Sd1 = 0.097.
BASIC SEISMIC–FORCE–RESISTING SYSTEM (INTERMEDIATE REINFORCED MASONRY SHEAR WALLS).
ANALYSIS PROCEDURE USED (EQUIVALENT LATERAL FORCE PROCEDURE).
CS = 0.096 (FACTORED).

FOUNDATIONS:

SOIL REPORT BY WESTERN TECHNOLOGIES INC; JOB NO.2522JW197; DATED OCTOBER 25, 2022; SPREAD FOOTINGS SHALL BEAR ON FIRM, UNDISTURBED SOIL. AT BELOW GRADE TANKS AND 1' OF 2 SACK SLURRY AT GRADE. IN ACCORDANCE WITH THE ABOVE REPORT. BOTTOM OF FOOTING TO BE 2'0" MINIMUM BELOW FINISHED GRADE. (THESE FOOTING DEPTHS ARE MINIMUMS AND THE CONTRACTOR SHALL COORDINATE WITH SOILS REPORT AND OTHER TRADES TO ENSURE THESE MINIMUMS ARE SUFFICIENT FOR THE WORK.) FINISHED GRADE IS DEFINED AS TOP OF SLAB FOR INTERIOR FOOTINGS AND LOWEST ADJACENT GRADE WITHIN 5 FEET FOR PERIMETER FOOTINGS. DESIGN SOIL BEARING VALUE = 2500 PSF. FOUNDATION EXCAVATIONS SHALL BE INSPECTED BY SOILS ENGINEER PRIOR TO PLACEMENT OF CONCRETE.

CONCRETE:

MINIMUM 28 DAY STRENGTH 5,000 PSI EXCEPT AS FOLLOWS: (TYPE II, U.N.O.)

WALLS -- 5,000 PSI
MILD REINFORCED SLAB ------------------------------------ 5,000 PSI
FOUNDATIONS --- 5,000 PSI

MECHANICALLY VIBRATE ALL CONCRETE WHEN PLACED, EXCEPT THAT SLABS ON GRADE NEED BE VIBRATED ONLY AROUND UNDER–FLOOR DUCTS, ETC. MAXIMUM SLUMP 4 1/2" FOR CONCRETE WITHOUT PLASTICIZER. IF PLASTICIZER IS USED, A HIGHER FINAL SLUMP MAY BE ALLOWED UPON STRUCTURAL ENGINEER'S APPROVAL. CAST CLOSURE POUR AROUND COLUMNS AFTER COLUMN DEAD LOAD IS APPLIED. UNLESS APPROVED OTHERWISE IN WRITING BY THE ARCHITECT, ALL CONCRETE SLABS ON GRADE SHALL BE BOUND BY CONTROL JOINTS (KEYED OR SAW CUT), SUCH THAT THE ENCLOSED AREA DOES NOT EXCEED 225 SQUARE FEET. KEYED CONTROL JOINTS NEED ONLY OCCUR AT EXPOSED EDGES DURING POURING, ALL OTHER JOINTS MAY BE SAW CUT. CONTRACTOR SHALL SUBMIT PROPOSED LOCATIONS FOR APPROVAL PRIOR TO CONSTRUCTION.

REINFORCING:

ASTM A615 (FY = 60 KSI) DEFORMED BARS FOR ALL BARS. ALL GRADE 60 REINFORCING TO BE WELDED SHALL BE ASTM A706. WELDED WIRE FABRIC PER ASTM A185, WIRE PER ASTM A82. NO TACK WELDING OF REINFORCING BARS ALLOWED WITHOUT PRIOR REVIEW OF PROCEDURE WITH THE STRUCTURAL ENGINEER. LATEST ACI CODE AND DETAILING MANUAL APPLY. CLEAR CONCRETE COVERAGES AS FOLLOWS UNLESS NOTED OTHERWISE IN THE CONCRETE FIRE RATING TABLE:

CAST AGAINST AND PERMANENTLY EXPOSED TO EARTH ------------- 3"
EXPOSED TO EARTH OR WEATHER
#6 OR LARGER ------------------------------------ 2"
#5 AND SMALLER ---------------------------------- 1 1/2"
FLAT SLAB -- 3/4"
ALL OTHER PER LATEST EDITION OF ACI 318.

LAP SPLICES IN CONCRETE:

LAP SPLICES, UNLESS NOTED OTHERWISE, SHALL BE CLASS "B" TENSION LAP SPLICES PER LATEST EDITION OF ACI 318. LAP SPLICES IN CONCRETE COLUMNS SHALL BE TENSION LAP SPLICES. STAGGER SPLICES A MINIMUM OF ONE LAP LENGTH. LAPS IN WELDED WIRE FABRIC SHALL BE MADE SO THAT THE OVERLAP, MEASURED BETWEEN OUTERMOST CROSS WIRES OF EACH FABRIC SHEET, IS NOT LESS THAN THE SPACING OF CROSS WIRES PLUS 2 INCHES. ALL WELDED WIRE FABRIC SHALL BE CHAIRED TO ENSURE PROPER CLEARANCES.

ALL SPLICE LOCATIONS SUBJECT TO APPROVAL BY THE STRUCTURAL ENGINEER. PROVIDE BENT CORNER BARS TO MATCH AND LAP WITH HORIZONTAL BARS AT ALL CORNERS AND INTERSECTIONS PER TYPICAL DETAILS. REINFORCING BAR SPACING GIVEN ARE MAXIMUM ON CENTERS. ALL BARS PER CRSI SPECIFICATIONS AND HANDBOOK. DOWEL ALL VERTICAL REINFORCING TO FOUNDATION WITH STANDARD 90–DEGREE HOOKS UNLESS NOTED OTHERWISE. SECURELY TIE ALL BARS IN LOCATION BEFORE PLACING CONCRETE.

MASONRY:

MECHANICALLY VIBRATE GROUT IN VERTICAL SPACES IMMEDIATELY AFTER POURING AND AGAIN ABOUT 5 MINUTES LATER. PROVIDE CLEANOUTS IF GROUT LIFT EXCEEDS 4'–0" IN BLOCK WALLS. MAXIMUM GROUT LIFT SHALL BE 8'–0". UNLESS NOTED OTHERWISE ON THE PLANS, PLACE CONTROL JOINTS IN MASONRY WALLS SUCH THAT NO STRAIGHT RUN OF WALL EXCEEDS 24'–0". CONTROL JOINTS SHALL NOT OCCUR WITHIN 8'–0" OF WALL CORNERS, INTERSECTIONS, ENDS, WITHIN 24" OF CONCENTRATED POINTS OF BEARING OR JAMBS, OR OVER OPENINGS UNLESS SPECIFICALLY SHOWN ON THE STRUCTURAL DRAWINGS. ALL MASONRY BELOW FINISHED FLOOR OR GRADE SHALL BE GROUTED SOLID. LAP SPLICES SHALL BE AS FOLLOWS:

BAR SIZE	#3	#4	#5	#6	#7	#8	#9
BAR LAPS (INCHES)	27	36	45	54	63	72	81

HOLLOW CONCRETE MASONRY UNITS SHALL CONFORM TO ASTM C90, NORMAL WEIGHT, RUNNING BOND, MORTAR TYPE S (1800 PSI), COMPRESSIVE STRENGTHS AS FOLLOWS:

F'M(PSI)	UNIT STRENGTH, NET (PSI)	GROUT (PSI)	LOCATION
2000	2000	2000	TYPICAL U.N.O.

VERTICAL REINFORCING:

1 #5 IN CENTER OF GROUT AT CENTER OF WALL, CONTINUOUS FULL HEIGHT OF WALL AT ALL CORNERS, INTERSECTIONS, WALL ENDS, BEAM BEARINGS, JAMBS, EACH SIDE OF CONTROL JOINTS AND AT INTERVALS NOT TO EXCEED 48" O.C. UNLESS NOTED OTHERWISE. TIE AT 8'–0" VERTICALLY, WITH SINGLE WIRE LOOP TIE BY A.A. WIRE PRODUCTS COMPANY. LAP SPLICES SHALL BE AS PER SCHEDULE UNDER "MASONRY" SECTION. DOWEL ALL VERTICAL REINFORCING TO FOUNDATION WITH DOWELS TO MATCH VERTICAL REINFORCING.

HORIZONTAL REINFORCING:

2 #5 IN MINIMUM 8" DEEP GROUTED CONTINUOUS BOND BEAM AT (ELEVATED FLOORS AND) ROOFLINE. 1 #5 IN MINIMUM 8" DEEP GROUTED CONTINUOUS BOND BEAM AT TOP OF PARAPET OR TOP OF A FREESTANDING WALL AND AT BOTTOM OF WALL. USE 1 #4 HORIZONTAL BOND BEAM AT 48" O.C. VERTICALLY SPACED FOR ALL WALLS WITHOUT RUNNING BOND (STACKED BOND). PLACE THESE BARS CONTINUOUS THRU CONTROL JOINTS PER TYPICAL DETAIL. PROVIDE BENT BARS PER TYPICAL DETAILS, TO MATCH HORIZONTAL BOND BEAM REINFORCING, AT CORNERS AND WALL INTERSECTION TO MAINTAIN BOND BEAM CONTINUITY. LAP SPLICES SHALL BE AS PER SCHEDULE UNDER "MASONRY" SECTION. DO NOT SPLICE WITHIN 8'–0" OF CONTROL JOINTS. USE STANDARD WEIGHT (NO. 9 GAGE WIRE) DUR–O–WAL OR DUR–O–WIRE (OR EQUIVALENT) LADDER TYPE JOINT REINFORCEMENT AT 16" O.C. IN MASONRY WALLS.

ANCHOR BOLTS:

ALL ANCHOR BOLTS SHALL BE ASTM F1554 GRADE 36 (WELDABLE), U.N.O., WHEN SPECIFIED ON PLAN, ALL ASTM F1554 GRADE ANCHOR BOLTS SHALL BE 511 (WELDABLE) ANCHOR BOLTS.

MAY BE BENT IN FIELD PER AISC REQUIREMENTS TO FIX DAMAGED ANCHOR BOLTS; FIELD BENT IS LIMITED TO 45° OR LESS. ANCHOR BOLTS CAN HAVE HEADED OR HOOKED BOLTS SHAPES. USE HEADED ANCHOR BOLTS WHERE ANCHOR BOLT SHAPE IS NOT SPECIFIED. ANCHOR BOLTS SHALL BE INSPECTED PER SPECIAL INSPECTION TABLE REQUIREMENTS.

STRUCTURAL STEEL:

STEEL SETIONS – MINIMUM GRADE AND STRENGTH

STEEL WIDE FLANGES = ASTM A992 (50KSI)
STEEL CHANNELS = ASTM A36 (36KSI)
STEEL ANGLES = ASTM A36 (36KSI)
STEEL COLUMN BASE PLATES = ASTM A992 (50KSI)
STEEL PLATES AT MOMENT FRAME AND BRACED FRAME CONNECTIONS = ASTM A992 (50KSI)
STEEL PLATES (MISCELLLANEOUS) = ASTM A36 (36KSI)
STEEL HSS (RECTANGLE) = ASTM A500 (46KSI)
STEEL HSS (ROUND) = ASTM A500 (42KSI)
STEEL PIPES = ASTM A501 (36KSI) – OR –
ASTM A53 (35KSI), TYPE E OR S

NOTE: ALL 36KSI STEEL MAY BE SUBSTITUTED WITH 50KSI STEEL UNLESS NOTED OTHERWISE.

ALL CONSTRUCTION PER LATEST AISC HANDBOOK. ALL REFERENCE TO HEADED STUDS SHALL BE HIGH STRENGTH HEADED STUDS. ATTACHMENT OF HEADED STUDS SHALL CONFORM TO ALL REQUIREMENTS OF THE LATEST EDITION OF THE "RECOMMENDED PRACTICES FOR STUD WELDING" AND THE "STRUCTURAL WELDING CODE" PUBLISHED BY AWS. ALL BOLTS, ANCHOR BOLTS, EXPANSION BOLTS, ETC. SHALL BE INSTALLED WITH STEEL WASHERS AT SLOTTED HOLES IN STEEL SECTIONS. ALL WELDING SHALL BE PERFORMED BY WELDERS HOLDING VALID CERTIFICATES AND HAVING CURRENT EXPERIENCE IN THE TYPE OF WELD SHOWN ON THE DRAWINGS OR NOTES. CERTIFICATES SHALL BE THOSE ISSUED BY AN ACCEPTED TESTING AGENCY. ALL WELDING DONE BY E70 SERIES LOW HYDROGEN RODS UNLESS NOTED OTHERWISE. FOR GRADE 60 REINFORCING BARS, USE E90 SERIES. ALL WELDING PER LATEST AMERICAN WELDING SOCIETY STANDARDS, (EXCEPT STEEL JOISTS AND JOIST GIRDERS SHALL COMPLY WITH SJI STANDARDS). THESE DRAWINGS DO NOT DISTINGUISH BETWEEN SHOP AND FIELD WELDS; THE CONTRACTOR MAY SHOP WELD OR FIELD WELD AT HIS DISCRETION. SHOP WELDS AND FIELD WELDS SHALL BE SHOWN ON THE SHOP DRAWINGS SUBMITTED FOR REVIEW. ALL FULL (COMPLETE) PENETRATION WELDS SHALL BE TESTED AND CERTIFIED BY AN INDEPENDENT TESTING LABORATORY. WHEN STRUCTURAL STEEL IS FURNISHED TO A SPECIFIED MINIMUM YIELD POINT GREATER THAN 36 KSI, THE ASTM OR OTHER SPECIFICATION DESIGNATION SHALL BE INCLUDED NEAR THE ERECTION MARK ON EACH SHIPPING ASSEMBLY OR IMPORTANT CONSTRUCTION COMPONENT, OVER ANY SHOP COAT OF PAINT, PRIOR TO SHIPMENT FROM THE FABRICATOR'S PLANT. STRUCTURAL STEEL COMPONENTS, AND FASTENERS AT ALL EXTERIOR CONDITIONS SHALL BE GALVANIZED OR PROTECTED AGAINST CORROSION USING APPROVED METHOD PUBLISHED BY AISC OR ANSI. WELDS ON GALVANIZED STEEL SHALL FOLLOW AWS D–19.0 SPECIFICATIONS.

STRUCTURAL BOLTS:

ALL STRUCTURAL BOLTS SHALL BE ASTM F3125 GRADE A325 TYPE 1 AND SHALL BE INSTALLED AS BEARING–TYPE CONNECTIONS WITH THREADS INCLUDED IN SHEAR PLANE (I.E. A TYPE "N" CONNECTION) UNLESS NOTED OTHERWISE. USE A325 TYPE 3 BOLTS AT ALL CONNECTIONS EXPOSED TO WEATHERING. USE SC (SLIP CRITICAL) AT ALL MOMENT FRAMES AND BRACED FRAMES. USE ASTM A354 BOLTS WHERE THE BOLT LENGTH REQUIRED FOR THE CONNECTION EXCEEDS THE MINIMUM LENGTH OF AN A325 BOLT. BOLTS MAY BE TIGHTENED USING ANY AISC APPROVED METHOD. ALL STRUCTURAL BOLTING SHALL BE INSPECTED BY AN INDEPENDENT TESTING LABORATORY TO ENSURE BOLT TENSION.

STEEL GRATING:

UNLESS NOTED OTHERWISE IN ARCHITECTURAL SPECIFICATIONS, USE PAINTED (GALVANIZED) STEEL GRATING WITH 2 1/2" X 3/16" BEARING BARS AT 1 3/16" O.C. AND CROSSBARS AT 4" O.C. GRATING SHALL BE ERECTED AND ATTACHED PER MANUFACTURER'S RECOMMENDATIONS.

ROOF DECK:

DECK SHALL BE 1 1/2" DEEP, 36" WIDE, 20 GAGE GALVANIZED STEEL, WITH MINIMUM YIELD STRESS OF 50 KSI, WITH MINIMUM S = 0.237 IN3 AND I = 0.231 IN4 PER FOOT OF WIDTH. DECK SHALL BE ERECTED IN ACCORDANCE WITH MANUFACTURER'S RECOMMENDATIONS AS 1 SPAN MINIMUM AND SHALL BE ATTACHED FOR A MINIMUM DIAPHRAGM SHEAR CAPACITY OF 650 PLF USING THE FOLLOWING MINIMUM ATTACHMENTS:

WELD DECK TO SUPPORTING MEMBERS WITH 4 – 5/8" DIAMETER OR 3/8" X 1" PUDDLE WELDS PER SHEET AT ENDS, END LAPS AND AT INTERMEDIATE SUPPORTS, AND AT 24" O.C. AT PERIMETER BEAMS AND OPENING EDGES RUNNING PARALLEL TO THE DECK. SIDE SEAM ATTACHMENT SHALL BE VSC2 AT 24" O.C.

CONSTRUCTION JOINTS:

ALL CONSTRUCTION JOINTS IN WALLS SHALL BE KEYED IN ACCORDANCE WITH THE TYPICAL CONSTRUCTION JOINT DETAILS SHOWN ON THE STRUCTURAL DRAWINGS OR, AT THE CONTRACTOR'S OPTION, SHALL BE INTENTIONALLY ROUGHENED IN ACCORDANCE WITH THE FOLLOWING: THE SURFACE OF ROUGHENED JOINTS SHALL BE SAND BLASTED OR ROUGHENED WITH A CHIPPING HAMMER TO EXPOSE THE AGGREGATE EMBEDDED IN THE PREVIOUS POUR. THE EXPOSED AGGREGATE SHALL PROTRUDE A MINIMUM OF 1/4 INCH. ALL SURFACES OF CONSTRUCTION JOINTS SHALL BE CLEANED AND LAITANCE REMOVED. IMMEDIATELY BEFORE NEW CONCRETE IS PLACED, ALL CONSTRUCTION JOINTS SHALL BE WETTED AND STANDING WATER REMOVED. VERTICAL CONSTRUCTION JOINTS IN WALLS SHALL BE HELD TO A MAXIMUM SPACING OF 60'–0". ALL CONSTRUCTION JOINTS IN SLABS, JOISTS, BEAMS, AND GIRDERS SHALL BE OFFSET A DISTANCE EQUAL TO TWICE THE WIDTH OF THE BEAM.

ACCORDANCE WITH THE TYPICAL SLAB ON DECK CONSTRUCTION JOINT DETAIL SHOWN ON THE STRUCTURAL DRAWINGS. BEAMS AND GIRDERS HAVE BEEN DESIGNED ASSUMING THE CONSTRUCTION JOINTS TO BE LOCATED IN THE MIDDLE THIRD OF THE BEAM, GIRDER, OR SLAB SPAN. ALL CONSTRUCTION, CONTROL, AND ISOLATION JOINTS FOR SLABS ON GRADE SHALL BE IN ACCORDANCE WITH THE TYPICAL SLAB ON GRADE DETAILS. THE CONTRACTOR SHALL SUBMIT THE PROPOSED LOCATIONS OF CONSTRUCTION JOINTS TO THE ENGINEER FOR ACCEPTANCE BEFORE STARTING CONSTRUCTION.

ELECTRICAL CONDUIT IN CONCRETE SLABS:

ELECTRICAL CONDUIT SHALL BE RIGID STEEL CONDUIT OR FLEXIBLE PLASTIC CONDUIT. ALUMINUM CONDUIT IS PROHIBITED. CONDUIT WITH A MAXIMUM OUTSIDE DIAMETER OF 1/6 TIMES THE SLAB THICKNESS MAY BE EMBEDDED IN ONE LAYER AT THE MID–DEPTH OF SLABS. MINIMUM CLEAR DISTANCE BETWEEN CONDUITS SHALL BE 3 TIMES CONDUIT DIAMETER. CONDUIT SHALL BE FIRMLY CHAIRED AND TIED TO PREVENT DISPLACEMENT DURING POURING. PLACE #3 AT 12 INCHES O.C. ADDITIONAL REINFORCING ABOVE AND BELOW, PERPENDICULAR TO THE CONDUIT. THE ADDED REINFORCING SHALL EXTEND 1'–0" PAST THE CONDUIT ON BOTH SIDES. FOR CONDUIT PLACED IN SLABS ON METAL DECKING, CONDUIT SHALL RUN IN THE METAL DECK FLUTES PER THE TYPICAL CONDUIT IN SLAB ON METAL DECK DETAIL.

CONCRETE INSERTS:

THIN SLAB TYPE INSERTS SHALL BE GALVANIZED AND HAVE THE FOLLOWING MINIMUM WORKING LOADS(A 4:1 RATIO OF ULTIMATE TO WORKING VALUES IS ASSUMED):

BOLT DIAMETER	WORKING LOAD	
	SHEAR	TENSION
1/2"	1,000 LBS.	650 LBS.
5/8"	1,250 LBS.	700 LBS.
3/4"	1,600 LBS.	850 LBS.

COIL LOOP INSERTS SHALL BE GALVANIZED AND HAVE THE FOLLOWING MINIMUM WORKING LOADS(A 3:1 RATIO OF ULTIMATE TO WORKING VALUES IS ASSUMED):

BOLT DIAMETER	WORKING LOAD	
	SHEAR	TENSION
1/2"	2,200 LBS.	2,820 LBS.
5/8"	3,000 LBS.	3,620 LBS.
3/4"	3,100 LBS.	3,660 LBS.

THREADED COIL RODS, COIL NUTS, ETC., USED IN CONJUNCTION WITH CONCRETE INSERTS, SHALL HAVE A WORKING LOAD EQUAL TO OR GREATER THAN THE CORRESPONDING CONCRETE INSERT. CONTRACTOR SHALL SUBMIT MANUFACTURER'S SIZE AND STRENGTH DATA PRIOR TO CONSTRUCTION TO THE STRUCTURAL ENGINEER THRU THE ARCHITECT. VALUES LISTED ABOVE ARE FOR RICHMOND STRUCTURAL CONNECTION INSERTS.

EXPANSION AND SCREW ANCHORS:

USE STUD TYPE EXPANSION ANCHOR WITH A SINGLE PIECE WEDGE ONLY WHERE NOTED ON PLANS. IF USE IS REQUESTED FOR OTHER THAN WHERE NOTED CONTACT STRUCTURAL ENGINEER THROUGH ARCHITECT FOR APPROVAL.

CONTRACTOR SHALL SUBMIT MANUFACTURER'S SIZE AND STRENGTH DATA TO ENGINEER THROUGH ARCHITECT PRIOR TO CONSTRUCTION. INSTALL ALL BOLTS AS OUTLINED IN MANUFACTURER'S SPECIFICATIONS, UTILIZING PROPER SIZE AND TYPE OF DRILL, CLEANING HOLE, DRIVING AND TIGHTENING BOLT.

IN CONCRETE:

ANCHORS USED MUST HAVE ICC APPROVAL AND INCLUDE HILTI KWIK BOLT TZ2 (ESR–4266), AND SIMPSON STRONG BOLT–2 (ESR–3037), AND DEWALT POWER–STUD+SD2 (ESR–2502), AND SIMPSON TITEN HD (ESR–2713), HILTI KWIK HUS–EZ (ESR–3027), AND DEWALT SCREW–BOLT+ (ESR–3889) OR APPROVED EQUAL.

IN MASONRY:

ANCHORS USED MUST HAVE ICC APPROVAL AND INCLUDE HILTI KWIK BOLT 3 (ESR–1385), AND SIMPSON STRONG BOLT–2 (ES–240), DEWALT POWER–STUD+SD1 (ESR–2966), HILTI KWIK HUS–EZ (ESR–3056) AND SIMPSON TITEN HD (ESR–1056), AND DEWALT SCREW–BOLT+ (ESR–4042) OR APPROVED EQUAL.

EPOXY ANCHORS IN CONCRETE AND MASONRY:

INJECTABLE ADHESIVE SHALL BE USED FOR INSTALLATION OF REINFORCING STEEL DOWELS OR THREADED ANCHOR RODS AND INSERTS INTO NEW OR EXISTING CONCRETE OR SOLID GROUTED CONCRETE MASONRY UNITS ONLY WHERE SPECIFIED ON PLANS. IF USE IS REQUESTED FOR OTHER THAN WHERE NOTED CONTACT STRUCTURAL ENGINEER THROUGH ARCHITECT FOR APPROVAL. ADHESIVE SHALL BE FURNISHED IN SIDE BY SIDE PACKS WHICH KEEP COMPONENT A AND COMPONENT B SEPARATE. USE ONLY INJECTION TOOLS AND STATIC MIXING NOZZLES RECOMMENDED BY MANUFACTURER. MANUFACTURER'S INSTRUCTIONS SHALL BE FOLLOWED.

IN CONCRETE:

ANCHORS USED MUST HAVE I.C.C. APPROVAL IN CRACKED CONCRETE AND INCLUDE SIMPSON SET–XP (ESR–2508), HILTI HIT–RE500–V3 (ESR–3814), DEWALT PURE110+ (ESR–3298) OR APPROVED EQUIVALENT. THE USE OF ANY EPOXY ANCHOR MUST BE APPROVED BY THE ENGINEER OF RECORD PRIOR TO INSTALLATION.

IN MASONRY:

ANCHORS USED MUST HAVE ICC APPROVAL AND INCLUDE SIMPSON SET (ESR–1772) AND HILTI HIT–HY 270 MAX (ESR–4143) AND DEWALT AC100+GOLD (ESR–3200) OR APPROVED EQUIVALENT. THE USE OF ANY EPOXY ANCHOR MUST BE APPROVED BY THE ENGINEER OR RECORD PRIOR TO INSTALLATION.

1. ADHESIVE ANCHORS INSTALLED IN HORIZONTAL TO VERTICALLY OVERHEAD ORIENTATION TO SUPPORT SUSTAINED TENSION LOADS SHALL BE DONE BY A CERTIFIED ADHESIVE ANCHOR INSTALLER (AAI) AS CERTIFIED THROUGH ACI (ACI 318–11 D.9.2.2) / (ACI 318–14 17.8.2.2) / (ACI 318–19 17.2.3) PROOF OF CURRENT CERTIFICATION SHALL BE SUBMITTED TO THE ENGINEER FOR APPROVAL PRIOR TO COMMENCEMENT OF INSTALLATION.
2. ADHESIVE ANCHORS MUST BE INSTALLED IN CONCRETE AGED A MINIMUM OF 21 DAYS (ACI 318–11 D.2.2) / (ACI 318–14 17.1.2) / (ACI 318–19 17.2.2).
3. THE REMOVAL AND RESETTING OF POST INSTALLED ANCHORS IS PROHIBITED (ACI 318–19 17.3.1).
4. PROVIDE SPECIAL INSPECTION FOR ALL MECHANICAL AND ADHESIVE ANCHORS PER THE APPLICABLE BUILDING CODE AND PER THE CURRENT ICC–ES REPORT (IBC 2012, 2015, 2018 TABLE 1705.3 TYPE 4, NOTE B).

STRUCTURAL FILL:

ALL FILL PLACED TO SUPPORT SLABS ON GRADE, BEHIND PERMANENT WALLS, AND AROUND ALL DRAINS SHALL CONSIST OF WELL GRADED, GRANULAR MATERIAL PER THE SPECIFICATIONS. SOILS FOR STRUCTURAL FILL SHALL BE APPROVED BY THE GEOTECHNICAL ENGINEER. STRUCTURAL FILL SHALL BE PLACED ON SOUND NATIVE MATERIAL. PROOF–ROLL CUT AREAS WHICH PROVIDE SUPPORT FOR PERMANENT STRUCTURES. AREAS WHICH ARE EXCESSIVELY YIELDING, AS DETERMINED BY THE CONTINUOUS OBSERVATION OF THE GEOTECHNICAL ENGINEER, SHALL BE OVEREXCAVATED AND REPLACED WITH STRUCTURAL FILL. STRUCTURAL FILL SHALL BE PLACED PER THE SPECIFICATION. USE LEAN CONCRETE FILL BELOW ALL PIPES EXISTING OUT OF BASEMENT WALL, FULL HEIGHT OF WALL. CONCRETE SHALL CONTAIN 2 SACKS OF CEMENT PER YARD.

LATERAL PRESSURE ON SUBGRADE WALLS:

THE DESIGN PRESSURES FOR SUBGRADE WALLS ARE BASED ON A "DRAINED" CONDITION. SEE CIVIL AND MECHANICAL DRAWINGS FOR SUBGRADE DRAINAGE SYSTEM. SEE GEOTECHNICAL REPORT FOR COMPACTION REQUIREMENTS AT SUBGRADE WALLS. SUBGRADE WALLS AND SUPPORTING SLABS SHALL HAVE ATTAINED THEIR FULL CONCRETE STRENGTH BEFORE PLACING ANY BACKFILL U.N.O. THE CONTRACTOR SHALL PROVIDE TEMPORARY BRACES FOR WALLS IF BACKFILL IS PLACED BEFORE WALLS AND SLABS ACHIEVE FULL CONCRETE STRENGTH.

NOTES ON CRACKING OF CONCRETE STRUCTURES:

CRACKING IS INHERENT TO THE MATERIAL PROPERTIES OF CONCRETE CONSTRUCTION (INCLUDING POST–TENSIONED CONCRETE STRUCTURES). WHILE EVERY EFFORT HAS BEEN MADE TO MINIMIZE THE EFFECTS OF UNSIGHTLY CRACKING, THE PRESENCE OF CRACKS ARE NORMAL AND UNAVOIDABLE. THE DESIGN OF THE CONCRETE STRUCTURAL ITEMS HAVE BEEN ANALYZED USING A "CRACKING SECTION." THE PRESENCE OF THE CRACKING SHOULD NOT BE CONSIDERED DETRIMENTAL TO THE STRUCTURE. CRACKS LARGER THAN 10 MILS SHALL BE FILLED AND SEALED WITH AN APPROVED CRACK FILLER TO PREVENT FUTURE DETERIORATION. ALLOWANCE SHALL BE MADE IN THE CONSTRUCTION BUDGET FOR SEALING OF SUCH CRACKS. IN SOME CASE, CRACKS DO NOT APPEAR UNTIL WELL AFTER CONSTRUCTION HAS BEEN COMPLETED. IT IS THE RESPONSIBILITY OF THE OWNER TO MAINTAIN THE STRUCTURE PROPERLY OVER THE LIFE OF THE STRUCTURE. CONCRETE CRACKS, SHOULD THEY OCCUR, SHALL BE FILLED AND SEALED TO PREVENT PREMATURE DETERIORATION OF THE STRUCTURE.

STRUCTURAL SHEET INDEX

SHEET	DESCRIPTION
S1.1	GENERAL STRUCTURAL NOTES
S1.2	GENERAL STRUCTURAL NOTES
S1.3	TYPICAL DETAILS
S1.4	TYPICAL DETAILS
S1.5	TYPICAL DETAILS
S1.6	TYPICAL DETAILS
S1.7	TYPICAL DETAILS
S2.00	FOUNDATION PLAN
S2.01	FRAMING PLAN
S2.10	FRAMING PLAN
S3.1	FOUNDATION DETAILS
S3.2	FOUNDATION DETAILS
S3.3	FRAMING DETAILS
S4.1	FRAMING DETAILS
S4.2	FRAMING DETAILS

PK ASSOCIATES, LLC
6900 E. Belleview Ave. #200
Greenwood Village, Colorado 80111
Phone: (720) 799–1058
Email: cadd@pkastructural.com
Website: www.pkastructural.com

ISSUED FOR BID

NO	BY	DATE	REVISIONS	DATE	APP.

Registered Professional Engineer (Civil) CERTIFICATE NO. 70374 JAMES APPLEYARD Date Signed 10/31/25 ARIZONA, U.S.A.

PREPARED BY: PKA
DESIGNED BY: JA
DRAWN BY: NS
CHECKED BY: JA
SCALE: AS NOTED
DATE SEP 2025
JOB NO. 23364

TITLE: GENERAL STRUCTURAL NOTES

JOB: TOWN OF JEROME WASTEWATER TREATMENT PLANT
YAVAPAI AZ

PREPARED BY: PACE Advanced Water Engineering
8723 E. VIA de COMMERCIO, SUITE A-204 | SCOTTSDALE, CA 85258
P: (408) 991-3595 | www.pacewater.com
TAYLOR B. PIERCE R.C.E 70097 DATE

SHEET S1.1
52 OF 99 SHEETS
JOB NO. 23364

THESE DRAWINGS ARE THE PROPERTY OF P.A.C.E. AND SHALL NOT BE REPRODUCED IN ANY MANNER NOR BE USED FOR CONSTRUCTION UNLESS STAMPED "ISSUED FOR CONSTRUCTION".

Item I.

GENERAL STRUCTURAL NOTES

APPLY UNLESS NOTED OTHERWISE

PK ASSOCIATES, LLC
6900 E. Belleview Ave. #200
Greenwood Village, Colorado 80111
Phone: (720) 799-1058
Email: cadd@pkastructural.com
Website: www.pkastructural.com

SHOP DRAWINGS:

SHOP DRAWINGS SHALL BE SUBMITTED FOR ALL STRUCTURAL ITEMS IN ADDITION TO ITEMS REQUIRED BY ARCHITECTURAL SPECIFICATIONS.

THE CONTRACTOR SHALL REVIEW ALL SHOP DRAWINGS PRIOR TO SUBMITTAL. ITEMS NOT IN ACCORDANCE WITH CONTRACT DOCUMENTS SHALL BE FLAGGED UPON HIS REVIEW.

VERIFY ALL DIMENSIONS WITH ARCHITECTURAL DRAWINGS AND ALL FINISHED GRADE WITH CIVIL DRAWINGS.

ANY CHANGES, SUBSTITUTIONS, OR DEVIATIONS FROM CONTRACT DOCUMENTS SHALL BE CLOUDED BY MANUFACTURER OR FABRICATOR. ANY OF THE AFOREMENTIONED WHICH ARE NOT CLOUDED OR FLAGGED BY SUBMITTING PARTIES, SHALL NOT BE CONSIDERED APPROVED AFTER ENGINEER'S REVIEW, UNLESS NOTED ACCORDINGLY.

THE ENGINEER HAS THE RIGHT TO APPROVE OR DISAPPROVE ANY CHANGES TO CONTRACT DOCUMENTS AT ANYTIME BEFORE OR AFTER SHOP DRAWING REVIEW.

THE SHOP DRAWINGS DO NOT REPLACE THE CONTRACT DOCUMENTS. ITEMS OMITTED OR SHOWN INCORRECTLY AND ARE NOT FLAGGED BY THE STRUCTURAL ENGINEER OR ARCHITECT ARE NOT TO BE CONSIDERED CHANGES TO CONTRACT DOCUMENTS. IT IS THE CONTRACTOR'S RESPONSIBILITY TO MAKE SURE ITEMS ARE CONSTRUCTED PER THE CONTRACT DOCUMENTS.

THE ADEQUACY OF ENGINEERING DESIGNS AND LAYOUT PERFORMED BY OTHERS RESTS WITH THE DESIGNING OR SUBMITTING AUTHORITY.

REVIEWING IS INTENDED ONLY AS AN AID TO THE CONTRACTOR IN OBTAINING CORRECT SHOP DRAWINGS. RESPONSIBILITY FOR CORRECTNESS SHALL REST WITH THE CONTRACTOR.

GENERAL:

ENTIRE CONTRACT DOCUMENTS SHALL BE USED TO CONSTRUCT BUILDING. SOME CRITICAL ITEMS REQUIRED BY OTHER DISCIPLINES MAY NOT BE SHOWN ON STRUCTURAL DRAWING (I.E. WALL, FLOOR AND ROOF OPENINGS, ARCHITECTURAL, MECHANICAL AND PLUMBING LOADS, SUPPORT PLATES ETC.)

ITEMS SHOWN BY OTHER DISCIPLINES WITH REFERENCE TO STRUCTURAL DRAWING BUT NOT SHOWN ON THESE STRUCTURAL DOCUMENTS SHALL BE CONSIDERED DESIGN BUILD ITEMS. CONTRACTOR SHALL SUBMIT DESIGN BY OTHERS FOR REVIEW.

THE STRUCTURAL CONSTRUCTION DOCUMENTS REPRESENT THE FINISHED STRUCTURE. THEY DO NOT INDICATE THE METHOD OF CONSTRUCTION. THE CONTRACTOR SHALL PROVIDE ALL MEASURES NECESSARY TO PROTECT THE STRUCTURE DURING CONSTRUCTION. SUCH MEASURES SHALL INCLUDE, BUT NOT BE LIMITED TO, BRACING, SHORING FOR LOADS DUE TO CONSTRUCTION EQUIPMENT, ETC. THE STRUCTURAL ENGINEER SHALL NOT BE RESPONSIBLE FOR THE CONTRACTOR'S MEANS, METHODS, TECHNIQUES, SEQUENCES FOR PROCEDURE OF CONSTRUCTION, OR THE SAFETY PRECAUTIONS AND THE PROGRAMS INCIDENT THERETO (NOR SHALL OBSERVATION VISITS TO THE SITE INCLUDE INSPECTION OF THESE ITEMS).

CONSTRUCTION MATERIALS SHALL BE SPREAD OUT IF PLACED ON FRAMED CONSTRUCTION. LOAD SHALL NOT EXCEED THE DESIGN LIVE LOAD PER SQUARE FOOT.

WHERE REFERENCE IS MADE TO VARIOUS TEST STANDARDS FOR MATERIALS, SUCH STANDARDS SHALL BE THE LATEST EDITION AND/OR ADDENDA.

ESTABLISH AND VERIFY ALL OPENINGS AND INSERTS FOR ARCHITECTURAL, MECHANICAL, PLUMBING AND ELECTRICAL WITH APPROPRIATE TRADES, DRAWINGS AND SUBCONTRACTORS PRIOR TO CONSTRUCTION.

OPTIONS ARE FOR CONTRACTOR'S CONVENIENCE. IF THE CONTRACTOR CHOOSES AN OPTION, THE CONTRACTOR SHALL BE RESPONSIBLE FOR ALL NECESSARY CHANGES AND SHALL COORDINATE ALL DETAILS.

NOTES AND DETAILS ON DRAWINGS SHALL TAKE PRECEDENCE OVER GENERAL STRUCTURAL NOTES AND TYPICAL DETAILS. WHERE NO DETAILS ARE SHOWN, CONSTRUCTION SHALL CONFORM TO SIMILAR WORK ON THE PROJECT.

ALL DIMENSIONS SHOWN (INCLUDING ELEVATIONS) ON STRUCTURAL DRAWINGS ARE TO ASSIST CONTRACTOR IN VERIFICATION. SCALING DIMENSIONS FROM DRAWINGS IS NOT PERMITTED. LOCATION OF ALL ITEMS SHALL BE DETERMINED BY DIMENSIONS OR NOTES ONLY; DO NOT USE GRAPHIC APPEARANCE TO ASSUME SPECIFIC LOCATIONS.

CONTRACTOR SHALL BE RESPONSIBLE FOR VERIFICATION OF ALL DIMENSIONS WITH ARCHITECTURAL AND FINISHED GRADE WITH CIVIL DRAWINGS PRIOR TO START OF CONSTRUCTION. RESOLVE ANY DISCREPANCY WITH THE ARCHITECT.

TYPICAL DETAILS MAY NOT NECESSARILY BE CUT ON PLANS, BUT APPLY UNLESS NOTED OTHERWISE.

WHERE DISCREPANCIES OCCUR BETWEEN PLANS, DETAILS, GENERAL STRUCTURAL NOTES AND SPECIFICATIONS, THE GREATER REQUIREMENTS SHALL GOVERN.

ANY ENGINEERING DESIGN, PROVIDED BY OTHERS AND SUBMITTED FOR REVIEW, SHALL BEAR THE SEAL OF AN ENGINEER REGISTERED IN THE STATE OF JURISDICTION.

SUPPLIER OF ENGINEERED STRUCTURAL COMPONENTS (I.E. STEEL JOISTS, STAIRS, PRECAST ITEMS) SHALL BE RESPONSIBLE FOR COMPLETE DESIGN AND SHALL USE ENTIRE CONTRACT DOCUMENTS TO INCLUDE ALL LOADS AND DETAIL REQUIREMENTS FROM ALL DISCIPLINES. SUPPLIER SHALL PROVIDE ADDITIONAL MATERIAL REQUIRED TO MEET ALL THEIR REQUIREMENTS FOR INSTALLATION (I.E. WIDER BEARING PLATES, SHIMS, ERECTION BOLTS ETC.).

STRUCTURAL STEEL SUPPLIER SHALL FURNISH BOLTS FOR OSHA CONNECTIONS (SEE DRAWINGS FOR DETAILS).

WALL SHORING SHALL BE INSTALLED PRIOR TO BACKFILLING BEHIND ALL BUILDING RETAINING WALLS, UNLESS ALL RESTRAINING SLABS ARE INSTALLED. USE HANDTAPPING ONLY WHEN WITHIN 8'-0", OR WITHIN HALF THE WALL HEIGHT OF BACKFILLED WALL.

CONTINUOUS FOUNDATION DRAIN PIPES (FRENCH DRAINS) OR WEEP HOLES SHALL BE PROVIDED BEHIND ALL BASEMENT WALLS AND ALL EXTERIOR RETAINING WALLS THAT RETAIN MORE THAN 3'-0" OF SOIL. WEEP HOLES WHERE USED SHALL BE 2" IN DIAMETER AT 6'-0" O.C. MAXIMUM.

BUILDING TOLERANCES:

STANDARD TOLERANCES SHALL BE BASED ON THE REQUIREMENTS OF THE AISC CODE OF STANDARD PRACTICE AND ACI 117, STANDARD SPECIFICATIONS FOR TOLERANCES FOR CONCRETE CONSTRUCTION AND MATERIALS.

SEQUENCING CONSTRUCTION AND LATERAL STABILITY:

THE STRUCTURAL COMPONENTS BY THEMSELVES ARE A NON-SELF-SUPPORTING STRUCTURE. LATERAL FORCES DUE TO WIND, EARTHQUAKE, OR SOIL ARE CARRIED BY THE ROOF AND FLOOR DIAPHRAGMS TO THE LATERAL SYSTEM. CERTAIN ELEMENTS SHOWN ON OR LOCAL STABILITY OF OTHER ELEMENTS (SUCH AS BEAMS, COLUMNS, AND WALLS). IF, DUE TO SEQUENCING OF CONSTRUCTION, THESE STABILITY ELEMENTS ARE NOT IN PLACE, THE CONTRACTOR SHALL RETAIN A LICENSED STRUCTURAL ENGINEER WHO SHALL INVESTIGATE WHERE TEMPORARY SHORING/BRACING IS REQUIRED, AND SHALL DESIGN THIS TEMPORARY SHORING/BRACING. THE CONTRACTOR SHALL PROVIDE THIS SHORING/BRACING UNTIL THE REQUIRED STRUCTURAL ELEMENTS AND THEIR CONNECTIONS HAVE BEEN INSTALLED AND REACH THEIR FINAL DESIGN STRENGTHS.

MISCELLANEOUS:

REFER TO ARCHITECTURAL, MECHANICAL, ELECTRICAL, CIVIL, ELEVATOR, OR OTHER SPECIALTY ENGINEERING DRAWINGS FOR DIMENSIONS NOT SHOWN, INCLUDING BUT NOT LIMITED TO: SIZE AND LOCATION OF CURBS, EQUIPMENT HOUSEKEEPING PADS, WALL AND FLOOR OPENINGS, BLOCKOUTS, FLOOR DEPRESSIONS, SUMPS, DRAINS, ANCHOR BOLTS, EMBEDDED ITEMS, ARCHITECTURAL TREATMENT, ETC. CONTRACTOR SHALL VERIFY DIMENSIONS AND RESOLVE DISCREPANCIES OR CONFLICTS PRIOR TO CONSTRUCTION. WHERE SECTIONS ARE INDICATED ON THE PLAN BY A NUMBER AND A DRAWING NUMBER THUS, 1/S5.01, THE INDICATED SECTION (1) IS SHOWN ON STRUCTURAL DRAWING S5.01.

ALL WINDOW SYSTEMS SHALL BE DESIGNED TO ACCOMMODATE VERTICAL DEFLECTION OF THE STRUCTURE OF 1/2" MINIMUM LIVE LOAD DEFLECTION, UNLESS GREATER VALUE IS NOTED ON PLANS OR DETAILS.

FLOOR FLATNESS/LEVELNESS SHALL MEET ARCHITECTURAL SPECIFICATIONS (1/4" IN 10 FOOT MINIMUM LEVELNESS UNLESS TIGHTER REQUIREMENT IN SPECIFICATIONS) IN HEIGHT FOR ALL STRUCTURAL SYSTEMS. CONTRACTOR SHALL INCLUDE COST FOR LEVELING ALL FLOORS. FOR ESTIMATING PURPOSES ONLY, ASSUME 1/2" THICK LEVELING AGENT OVER 15% OF FLOOR AREA.

FABRICATOR APPROVAL:

SPECIAL INSPECTIONS NOTED ABOVE APPLY TO SHOP FABRICATED ASSEMBLIES IN ADDITION TO ON-SITE WORK UNLESS THE FABRICATOR IS AN "APPROVED FABRICATOR" AS DEFINED IN 2022 CBC.

STRUCTURAL OBSERVATION:

ENGINEER OF RECORD SHALL PROVIDE VISUAL OBSERVATION OF THE STRUCTURAL SYSTEM, FOR GENERAL CONFORMANCE TO THE APPROVED PLANS AND SPECIFICATIONS, AT SIGNIFICANT CONSTRUCTION STAGES AND AT THE COMPLETION OF THE STRUCTURAL SYSTEM. CONTRACTOR IS REQUIRED FOR COORDINATING THE TIMING OF SITE VISITS AND SHALL INCLUDE A MINIMUM OF 3 VISITS. THESE VISITS ARE TO BE PAID BY THE CONTRACTOR. STRUCTURAL OBSERVATION DOES NOT INCLUDE OR WAIVE THE RESPONSIBILITY FOR THE INSPECTIONS REQUIRED BY THE BUILDING CODE (NOTED ABOVE).

INSTRUCTIONS TO BIDDERS CONTINGENCIES:

1. UNDER NO CIRCUMSTANCES SHALL THESE DRAWINGS BE "FINAL BID" UNTIL THE PROJECT IS FULLY PERMITTED.
2. ALL PRELIMINARY PRICING EFFORTS SHALL BE CONSIDERED TO BE ESTIMATES ONLY AND SHALL INCLUDE THE NECESSARY CONTINGENCIES, ALLOWANCES, ALTERNATES, ETC. AS APPROPRIATE TO ACCOUNT FOR MODIFICATIONS AND ADDITIONS THAT WILL OCCUR TO THE DRAWINGS DURING THE FINALIZATION OF THE DESIGN AND PERMITTING.
3. THE OWNER OR CONTRACTOR SHALL UTILIZE THE FOLLOWING MINIMUM CONTINGENCIES FOR EACH OF THE STRUCTURAL ELEMENT COSTS TO BE USED AT THE SOLE DISCRETION OF THE STRUCTURAL ENGINEER:

CONSTRUCTION DOCUMENTS/FINAL BID   3% MINIMUM

ALL OF THE "FINAL BID" CONTINGENCIES NOT USED BY THE STRUCTURAL ENGINEER SHALL BE REFUNDED TO THE OWNER PRIOR TO THE CLOSEOUT OF THE PROJECT.

4. ANY MODIFICATIONS, DELETIONS OR ELIMINATIONS TO THE STRUCTURAL BIDDING AND CONTINGENCY REQUIREMENTS, WITHOUT THE CONSENT OF THE STRUCTURAL ENGINEER, SHALL AUTOMATICALLY INDEMNIFY THE STRUCTURAL ENGINEER OF ANY COSTS THAT MAY ARISE DURING THE DESIGN AND CONSTRUCTION OF THE PROJECT.
5. WHERE DISCREPANCIES OCCUR WITHIN THE DRAWINGS THE CONTRACTOR WILL EITHER RESOLVE THE DISCREPANCIES WITH THE ARCHITECT BEFORE BIDDING OR INCLUDE THE GREATER COST ITEM IN THE BID AND RESOLVE THE DISCREPANCY PRIOR TO CONSTRUCTION.

NOTE TO CONTRACTOR REGARDING PRICING/BIDDING OF CITY SUBMITTAL DRAWINGS:

THESE DRAWINGS HAVE BEEN PREPARED FOR CITY SUBMITTAL, AND ARE NOT TO BE CONSIDERED 100% CONSTRUCTION DOCUMENTS UNTIL CITY PLAN REVIEW HAS BEEN COMPLETED AND FINAL BUILDING PERMIT HAS BEEN ISSUED. IF THESE DOCUMENTS ARE TO BE USED FOR PRICING, BID, OR STEEL MILL ORDER, THE CONTRACTOR SHALL PROVIDE IN THE PROJECT BUDGET AN ALLOWANCE FOR POTENTIAL CHANGES BETWEEN THE CITY SUBMITTAL DRAWINGS AND THE FINAL APPROVED SUBMITTAL AND CONSTRUCTION DOCUMENTS. ADDITIONALLY, MISCELLANEOUS ITEMS MAY NOT BE SHOWN ON THESE DRAWINGS. THESE ITEMS INCLUDE, BUT ARE NOT LIMITED TO, ELEVATOR AND EQUIPMENT SUPPORTS, BLOCKOUTS, ETC. REFER TO ARCHITECTURAL, MECHANICAL, ELECTRICAL, AND OTHER SPECIALTY DRAWINGS FOR ADDITIONAL INFORMATION. THE CONSTRUCTION BUDGET SHALL INCLUDE THESE ITEMS. THE STRUCTURAL ENGINEER WILL NOT BE RESPONSIBLE FOR CHANGE ORDER COSTS INCURRED (INCLUDING DISCARDED MATERIAL COSTS) DUE TO BIDDING OR STEEL MILL ORDER FROM THESE DRAWINGS. CONTACT STRUCTURAL ENGINEER FOR CLARIFICATION IF THE SCOPE AND QUANTITY OF ALLOWANCE TO BE CARRIED IS NOT CLEAR.

CONTRACTOR RESPONSIBILITY:

EACH CONTRACTOR OR SUB-CONTRACTOR RESPONSIBLE FOR THE CONSTRUCTION OF THE WIND AND/OR SEISMIC RESISTING SYSTEM THAT IS LISTED IN THE STATEMENT OF SPECIAL INSPECTIONS SHALL SUBMIT A WRITTEN STATEMENT OF RESPONSIBILITY TO THE BUILDING OFFICIAL AND THE OWNER PRIOR TO THE COMMENCEMENT OF WORK REQUIRING SPECIAL INSPECTION. THE CONTRACTOR'S STATEMENT OF RESPONSIBILITY SHALL CONTAIN ACKNOWLEDGMENT OF AWARENESS OF THE SPECIAL REQUIREMENTS CONTAINED IN THE STATEMENT OF SPECIAL INSPECTIONS.

DEFERRED SUBMITTALS: (PER 2012 IBC 107.3.4.1)

FOR THE PURPOSES OF THIS SECTION, DEFERRED SUBMITTALS ARE DEFINED AS THOSE PORTIONS OF THE DESIGN WHICH ARE NOT SUBMITTED AT THE TIME OF THE APPLICATION AND THAT ARE TO BE SUBMITTED TO THE BUILDING OFFICIAL WITHIN A SPECIFIED PERIOD.

DOCUMENTS FOR DEFERRED SUBMITTAL ITEMS SHALL BE SUBMITTED TO THE PROFESSIONAL IN RESPONSIBLE CHARGE FOR REVIEW. THE CONTRACTOR SHALL FORWARD THE REVIEWED DOCUMENTS TO BUILDING OFFICAL WITH A NOTATION INDICATING THAT THE DEFERRED SUBMITTAL DOCUMENTS HAVE BEEN REVIEWED AND BEEN FOUND TO BE IN GENERAL CONFORMANCE TO THE DESIGN OF THE BUILDING. THE DEFERRED SUBMITTAL ITEMS SHALL NOT BE INSTALLED UNTIL THE DESIGN AND SUBMITTAL DOCUMENTS HAVE BEEN APPROVED BY THE BUILDING OFFICIAL.

DEFERRED SUBMITTAL ITEMS:

ALUMINUM WALKWAY
GRATING
HANDRAILS/STAIRS
SHORING EXCAVATIONS
EQUIPMENT ATTACHMENTS, INCLUDING ADD'L FRAMING REQ'D

SPECIAL INSPECTION:

PER IBC CHAPTER 17, SPECIAL INSPECTION IS REQUIRED FOR THE FOLLOWING ITEMS:

CONCRETE: VERIFICATION AND INSPECTION	CONTINUOUS	PERIODIC	REFERRENCED STANDARD (NOTE 1)	IBC REFERENCE
1. Inspection of reinforcing steel, including prestressing tendons, and placement.	–	X	ACI 318: Ch. 20, 25.2 25.3, 26.6.1–26.6.3	1908.4
2. Reinforcing bar welding: a. Verify weldability of reinforcing bars other than ASTM A706; b. Inspect single-pass fillet welds, maximum 5/16"; and c. Inspect all other welds.	 – – X	 X X –	AWS D1.4 ACI 318: 26.6.4	---
3. Inspect anchors to be installed in concrete prior to and during placement of concrete where allowable loads have been increased or where strength design is used.	–	X	ACI 318: 17.8.2	---
4. Inspection of anchors post-installed in hardened concrete members. a. Adhesive anchors installed in horizontally or upwardly inclined orientations to resist sustained tension loads. b. Mechanical anchors and adhesive anchors not defined in 4.a.	 X –	 – X	 ACI 318: 17.8.2.4 ACI 318: 17.8.2	---
5. Verifying use of required design mix.	–	X	ACI318: Ch. 19, 26.4.3, 26.4.4	1904.1, 1904.2 1908.2, 1908.3
6. Prior to concrete placement, fabricate specimens for strength tests, per form slump and air content tests, and determine the temperature of the concrete.	X	–	ASTM C172 ASTM C31 ACI 318: 26.4, 26.12	1908.10
7. Inspection of concrete and shotcrete placement for proper application techniques.	X	–	ACI 318: 26.5	1908.6, 1908.7, 1908.8
8. Verify maintenance of specified curing temperature and techniques.	–	X	ACI 318: 26.5.3–26.5.5	1908.9
9. Inspect prestressed concrete for: a. Application of prestressing forces; and b. Grouting of bonded prestressing tendons	 X X	 – –	ACI 318: 26.10	 --- ---
10. Inspect erection of precast concrete members.	–	X	ACI 318: Ch. 26.8	---
11. Verification of in-situ concrete strength, prior to stressing of tendons in post-tensioned concrete and prior to removal of shores and forms from beams and structural slab.	–	X	ACI 318: 26.11.2	---
12. Inspect formwork for shape, location and dimensions of the concrete member being formed.	–	X	ACI 318: 26.11.1.2(b)	---

NOTES:
1. WHERE APPLICABLE, SEE ALSO SECTION 1707.1, SPECIAL INSPECTION FOR SEISMIC RESISTANCE.
2. TABLES TAKEN DIRECTLY FROM IBC FOR REFERENCE.

MASONRY INSPECTION TASK	FREQUENCY (a) LEVEL 3	REFERENCE FOR CRITERIA TMS 402	TMS 602	IBC REFERENCE
1. As masonry construction begins, verify that the following are in compliance: a. Proportions of site-prepared mortar. b. Grade, type and size of reinforcement connectors and anchor bolts. c. Sample panel construction.	 P P C		 ART. 2.1, 2.6A, & 2.6C ART. 3.4 ART. 1.6D	
2. Prior to grouting, verify that the following are in compliance: a. Grout space. b. Placement of reinforcement, connectors, & anchor bolts. c. Proportions of site-prepared grout.	 C C P	 SEC. 6.1, 6.3.1, 6.3.6, & 6.3.7	 ART. 3.2D & 3.2F ART. 3.2E & 3.4 ART. 2.6B & 2.4 G.1.b	
3. Verify compliance of the following during construction: a. Materials and procedures with the approved submittals. b. Placement of masonry units and mortar joint construction. c. Size and location of structural members. d. Type, size, and location of anchors, including other details of anchorage of masonry to structural members, frames, or other construction. e. Welding of reinforcement. f. Preparation, construction, and protection of masonry during cold weather (temperature below 40°F (4.4°C) or hot weather (temperature above 90°F (32.2°C). g. Placement of grout is in compliance.	 P P P C C P C	 SEC. 1.2.1(e), 6.2.1, & 6.3.1 SEC. 6.1.6.1.2	 ART. 1.5 ART. 3.3B ART. 3.3F ART. 1.8C & 1.8D ART. 3.5	1705.04, 2104 & 2105
4. Observe preparation of grout specimens, mortar specimens, and/or prisms.	C		ART. 1.4 B.2.a.3, 1.4 B.2.b.3, 1.4 B.2.c.3, 1.4 b.3, & 1.4 B.4	

NOTES:
(a) Frequency refers to the frequency of inspection, which may be continuous during the listed task or periodically during the listed task, as defined in the table.
NR=Not Required, P=Periodic, C=Continuous
(b) Required for the first 5000 sq. ft. (465 sq. m.) of AAC masonry.
(c) Required after the first 5000 sq. ft. (465 sq. m.) of AAC masonry.

STEEL: VERIFICATION AND INSPECTION	CONTINUOUS	PERIODIC	REFERENCED STANDARD (NOTE1)	IBC REFERENCE
1. Material verification of high-strength bolts, nuts and washers: a. Identification markings to conform to ASTM standards specified in the approved construction documents. b. Manufacturer's certificate of compliance required.	 – –	 X X	APPLICABLE ASTM MATERIAL SPECS AISC 360, SEC. A3.3	
2. Inspection of high-strength bolting: a. Bearing-type connections. AISC 360, Section M2.5 1704.3.3	–	X		
3. Material verification of structural steel: a. Identification markings to conform to ASTM standards specified in the approved construction documents. b. Manufacturers' certified mill test reports.	–	–	AISC 360, SEC. M2.5 ASTM A 6 OR ASTM A 568	
4. Material verification of weld filler materials: a. Identification markings to conform to AWS specification in the approved construction documents. b. Manufacturer's certificate of compliance required.	 – –	 – –	AISC 360, SEC. A3.5	
5. Inspection of welding: a. Structural steel: 1) Complete and partial penetration groove welds. 2) Multipass fillet welds. 3) Single-pass fillet welds > 5/16" 4) Single-pass fillet welds = 5/16" 5) Floor and roof deck welds. b. Reinforcing steel: 1) Verification of weld ability of reinforcing steel other than ASTM A 706. 2) Reinforcing steel-resisting flexural and Axial forces in intermediate and special Moment frames, and boundary elements of Special reinforced concrete shear walls and shear reinforcement. 3) Shear reinforcement. 4) Other reinforcing steel.	 – X X X – – – – X X –	 – – – – X X – X – – X	 AWS D1.1 AWS D1.1 AWS D1.1 AWS D1.1 AWS D1.3 AWS D1.4 ACI 318: 3.5.2	
6. Inspection of steel frame joint details for compliance with approved construction documents: a. Details such as bracing and stiffening. b. Member locations. c. Application of joint details at each connection.	– – – –	X – – –		

NOTES:
1. WHERE APPLICABLE SEE ALSO SECTION 1701.1, SPECIAL INSPECTION FOR SEISMIC RESISTANCE.
2. TABLES TAKEN DIRECTLY FROM IBC FOR REFERENCE.

STEEL: CONSTRUCTION OTHER THAN STRUCTURAL STEEL: VERIFICATION AND INSPECTION	CONTINUOUS	PERIODIC	REFERENCED STANDARD (NOTE1)	IBC REFERENCE
1. Material verification of cold-formed steel deck: a. Identification markings to conform to ASTM standards specified in the approved construction documents. b. Manufacturer's certified test reports.	 – –	X	APPLICABLE ASTM MATERIAL STANDARDS	
2. Inspection of welding: a. Cold formed steel deck: 1) Floor and roof deck welds. b. Reinforcing steel: 1) Verification of weldability of reinforcing steel other than ASTM A 706. 2) Reinforcing steel resisting flexural and axial forces in intermediate and special moment frames, and boundary elements of special structural walls of concrete and shear reinforcement. 3) Shear reinforcement. 4) Other reinforcing steel.	 – – X – X	 X X – X –	 AWS D1.3 ACI 318: 3.5.2 AWS D1.4	

SOILS:	CONTINUOUS	PERIODIC		
1. Verify materials below shallow foundations are adequate to achieve the design bearing apacity.	–	X		
2. Verify excavations are extended to proper depth and have reached proper material.	–	X		
3. Perform classification and testing of compacted fill materials.	–	X		
4. Verify use of proper materials, densities and lift thicknesses during placement and compaction of compacted fill.	X	–		
5. Prior to placement of compacted fill, inspect subgrade and verify that site has been properly prepared.	–	X		
Not the responsibility of the structural engineer. Special inspection certificate to be completed by geotechnical engineer.				

EXPANSION, SCREW, AND EPOXY BOLTS:	CONTINUOUS	PERIODIC		
1. During placement of all expansion, screw, & epoxy bolts, for visual verification of hole diameter and depth and placement of bolt and/or epoxy.	–	X		

DUTIES AND RESPONSIBILITIES OF THE SPECIAL INSPECTOR:

A) THE SPECIAL INSPECTOR SHALL OBSERVE THE WORK ASSIGNED TO BE CERTAIN IT CONFORMS WITH THE APPROVED DESIGN DRAWINGS AND SPECIFICATION.

B) THE SPECIAL INSPECTOR SHALL FURNISH INSPECTION REPORTS TO THE BUILDING OFFICIAL, AND TO THE ENGINEER.

C) UPON COMPLETION OF THE ASSIGNED WORK THE ENGINEER OR ARCHITECT SHALL COMPLETE AND SIGN THE APPROPRIATE FORMS CERTIFYING THAT TO THE BEST OF HIS KNOWLEDGE THE WORK IS IN CONFORMANCE WITH THE APPROVED PLANS AND SPECIFICATIONS AND THE APPLICABLE WORKMANSHIP PROVISIONS OF THE CODE.

ISSUED FOR BID

NO	BY	DATE	REVISIONS	DATE	APP.

Registered Professional Engineer (Civil) CERTIFICATE NO. 70374 JAMES APPLEYARD Date Signed 10/31/25 ARIZONA, U.S.A.

PREPARED BY: PKA
DESIGNED BY: JA
DRAWN BY: NS
CHECKED BY: JA SCALE: AS NOTED
DATE SEP 2025
JOB NO. 23364

TITLE: GENERAL STRUCTURAL NOTES

JOB: TOWN OF JEROME WASTEWATER TREATMENT PLANT
YAVAPAI AZ

PREPARED BY: PACE Advanced Water Engineering
8723 E. VIA de COMMERICO, SUITE A-204 | SCOTTSDALE, CA 85258
P: (408) 991-3595 | www.pacewater.com
TAYLOR B. PIERCE R.C.E 70097 DATE

THESE DRAWINGS ARE THE PROPERTY OF P.A.C.E. AND SHALL NOT BE REPRODUCED IN ANY MANNER NOR BE USED FOR CONSTRUCTION UNLESS STAMPED "ISSUED FOR CONSTRUCTION".

SHEET S1.2
53 OF 99 SHEETS
JOB NO. 23364

PK ASSOCIATES, LLC
6900 E. Belleview Ave. #200
Greenwood Village, Colorado 80111
Phone: (720) 799-1058
Email: cadd@pkastructural.com
Website: www.pkastructural.com

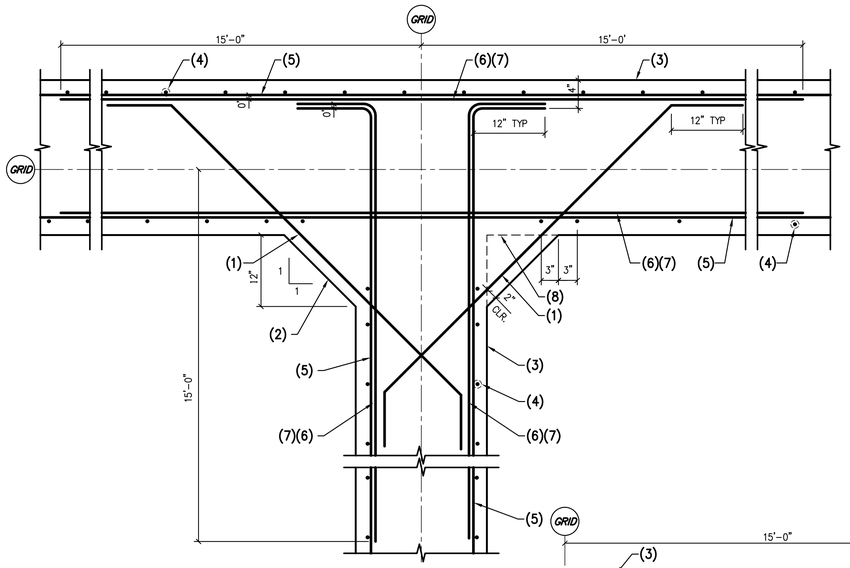

NOTES:
1. #4 AT 6" O.C. (NOT REQ'D AT 06A).
2. CHAMFER AT CORNER.
3. CONCRETE WALL.
4. VERTICAL WALL REINFORCING PER SHEET S3.1.
5. #6 AT 9" O.C. EACH FACE TYPICAL HORIZONTAL WALL REINFORCING. OPTION PROVIDE.
6. PROVIDE ADDITIONAL #6 AT 9" O.C. EACH FACE HORIZONTAL REINFORCING AT CORNERS (NET 4.5" O.C.).
7. PROVIDE ADDITIONAL HORIZONTAL REINFORCING FROM TOP OF WALL DOWN TO 5'-0" ABOVE MAT SLAB.
8. NO CHAMFER AT 06A.

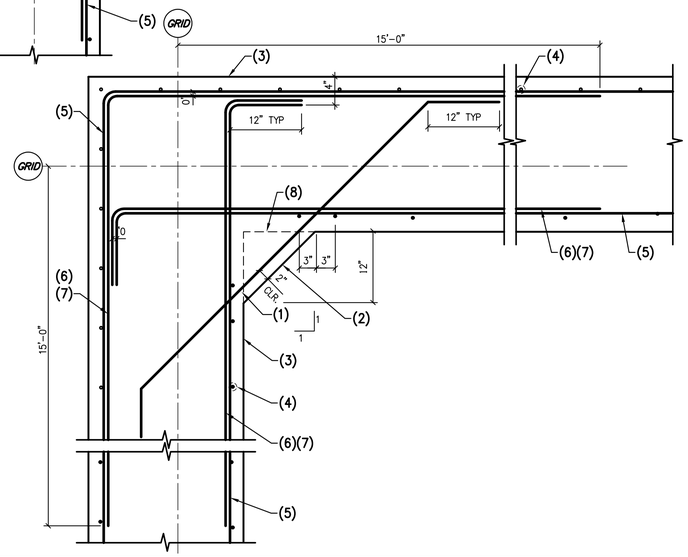

06 PLAN VIEW AT CONCRETE WALL INTERSECTIONS
06A AS NOTED
NO SCALE

BOLT DIAMETER	VERT BOLT EMBEDMENT LENGTH	HORIZ BOLT EMBEDMENT LENGTH	HEADED STUD FILLET WELD SIZE, "S".
1/2"	6"	4"	1/4"
5/8"	6"	4"	5/16"
3/4"	7"	5"	5/16"
7/8"	8"	6"	5/16"
1"	9"	7"	3/8"
1 1/8"	10"	8"	-----
1 1/4"	11"	9"	-----

NOTES:
PROVIDE ANCHORS, ANCHOR BOLTS AND EXPANSION BOLTS PER THIS SCHEDULE UNLESS NOTED ON PLANS OR DETAILS.

EXPANSION OR ADHESIVE BOLTS USED IN MASONRY SHALL HAVE I.C.B.O. APPROVAL IN MASONRY.

AT "ANCHORS" USE 3/16" FILLET WELD("S").

THICKNESS OF DRYPACK DOES NOT APPLY TOWARDS EMBEDMENT.

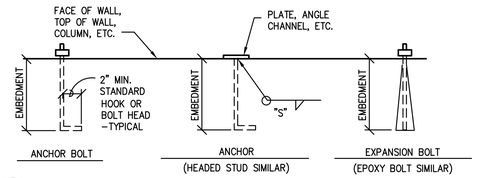

03 TYPICAL ANCHOR, ANCHOR BOLT, AND EXPANSION BOLT SCHEDULE
NO SCALE

STANDARD ASTM A615 (60 KSI) REBAR								
	CLASS B TENSION SPLICE LENGTHS						COMP. BARS	
CONC. PSI	f'c = 2,500 PSI/ f'c = 3,000 PSI		f'c = 4,000 PSI		f'c = 5,000 PSI AND HIGHER		f'c = ALL	
BAR LOCATION	REGULAR CLASS	TOP CLASS	REGULAR CLASS	TOP CLASS	REGULAR CLASS	TOP CLASS	STD LAP	ENCLOSED W/ SPIRAL TIES
SIZE								
#3	24"	31"	19"	24"	17"	22"	12"	12"
#4	32"	41"	25"	33"	23"	29"	15"	12"
#5	39"	51"	31"	41"	28"	36"	19"	14"
#6	47"	61"	37"	49"	34"	43"	23"	17"
#7	69"	89"	54"	71"	49"	63"	26"	20"
#8	78"	102"	62"	81"	56"	72"	30"	23"
#9	88"	115"	70"	91"	63"	81"	34"	25"
#10	100"	129"	79"	102"	70"	92"	38"	29"
#11	110"	143"	87"	113"	78"	102"	42"	32"

NOTES:
1. TOP BARS ARE ANY HORIZONTAL BARS PLACED SO THAT MORE THAN 12" OF FRESH CONCRETE IS CAST IN THE MEMBER BELOW THE REINFORCEMENT.
2. UNLESS NOTED OTHERWISE, LAP SPLICES IN CONCRETE BEAMS, SLABS AND WALLS SHALL BE CLASS "B" TENSION SPLICES. CONCRETE COLUMNS SHALL USE COMPRESSION LAP SPLICES.
3. CONTACT STRUCTURAL ENGINEER IF CENTER TO CENTER SPACING OF REINFORCING IS LESS THAN OR EQUAL TO 3 BAR DIAMETERS, <3db OR 2db CLEAR SPACING BETWEEN BARS.

01 LAP SCHEDULE FOR REINFORCING STEEL
NO SCALE

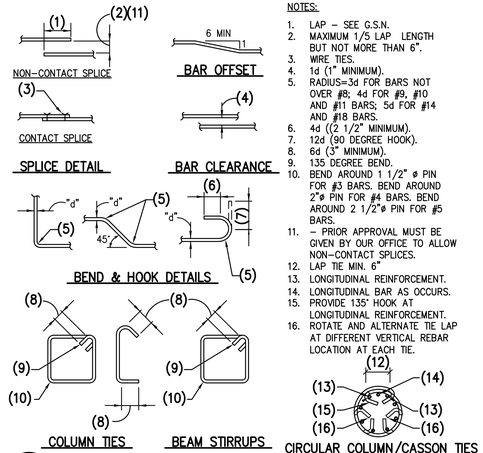

NOTES:
1. LAP – SEE G.S.N.
2. MAXIMUM 1/5 LAP LENGTH BUT NOT MORE THAN 6".
3. WIRE TIES.
4. 1d (1" MINIMUM).
5. RADIUS=3d FOR BARS NOT OVER #8; 4d FOR #9, #10 AND #11 BARS; 5d FOR #14 AND #18 BARS.
6. 4d ((2 1/2" MINIMUM).
7. 12d (90 DEGREE HOOK).
8. 6d (3" MINIMUM).
9. 135 DEGREE BEND.
10. BEND AROUND 1 1/2" ø PIN FOR #3 BARS. BEND AROUND 2"ø PIN FOR #4 BARS. BEND AROUND 2 1/2"ø PIN FOR #5 BARS.
11. – PRIOR APPROVAL MUST BE GIVEN BY OUR OFFICE TO ALLOW NON-CONTACT SPLICES.
12. LAP TIE MIN. 6"
13. LONGITUDINAL REINFORCEMENT.
14. LONGITUDINAL BAR AS OCCURS.
15. PROVIDE 135° HOOK AT LONGITUDINAL REINFORCEMENT.
16. ROTATE AND ALTERNATE TIE LAP AT DIFFERENT VERTICAL REBAR LOCATION AT EACH TIE.

04 TYPICAL CONCRETE REINFORCING BAR DETAILS
NO SCALE

STANDARD ASTM A615 (60 KSI) REBAR							
BAR SIZE	EMBEDMENT		EXTENSION		MINIMUM OUTSIDE DIAMETER OF BEND (INCHES)	CLASS A STRAIGHT BAR DEVELOPMENT	
	3000 PSI CONCRETE	5000 PSI CONCRETE & HIGHER	90° HOOK	180° HOOK		5000 PSI & HIGHER	3000 PSI
#3	6.00	6.00	4.5	2.5	3.00	13	17
#4	7.75	6.00	6.0	2.5	4.00	17	22
#5	9.75	7.50	7.5	2.5	5.00	22	28
#6	11.50	9.00	9.0	3.0	6.00	26	33
#7	13.50	10.50	10.5	3.5	7.00	38	48
#8	15.50	12.00	12.0	4.0	8.00	43	55
#9	17.50	13.50	13.75	4.75	11.28	48	62
#10	19.50	15.25	15.25	5.25	12.70	54	70
#11	21.75	16.75	17.00	5.75	14.10	60	78

NOTES:
1. EMBEDMENT LENGTH IS BASED ON 2 1/2" MINIMUM SIDE COVER AND 2" MINIMUM END COVER.
2. CONTACT STRUCTURAL ENGINEER IF CENTER TO CENTER SPACING OF REINFORCING IS LESS THAN OR EQUAL TO 3 BAR DIAMETERS <3db OR 2db CLEAR SPACING BETWEEN BARS.
3. WHERE CLEAR COVER <db, MULTIPLY EMBEDMENT AND STRAIGHT BAR DEVELOPMENT BY 1.5.

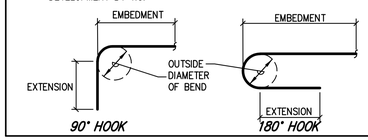

02 HOOKED DOWEL DEVELOPMENT LENGTH IN TENSION (INCHES)
NO SCALE

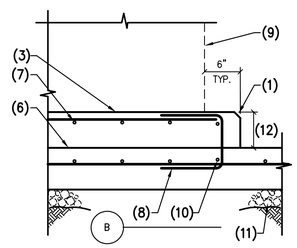

NOTES:
1. CHAMFER EDGES.
2. CONCRETE SLAB OR FINISHED GRADE WHERE OCCURS.
3. CONCRETE EQUIPMENT SLAB.
4. #4 AT 12" O.C. EACH WAY, TOP AND BOTTOM.
5. AT ABUTTING CONCRETE SLABS, INSTALL 1/2" EXPANSION JOINT MATERIAL ALL ROUND.
6. CONCRETE SLAB (ON GRADE AS SOIL OCCURS).
7. #4 AT 12" O.C. EACH WAY.
8. #3 AT EACH CORNER AND AT 48" O.C. MAX. x 6" 6" 6"
9. EDGE OF MECH'L UNIT.
10. #3 AT BEND, TYP.
11. SOIL AS OCCURS.
12. 4" MIN. VARIES AS REQ'D WHEN OVER A SLOPED SLAB.

08 CONCRETE EQUIPMENT PAD
NO SCALE

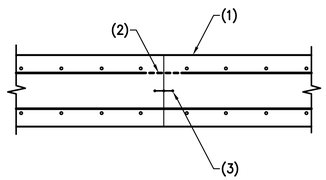

NOTES:
1. CONCRETE WALL.
2. CUT EVERY OTHER BAR ON EACH FACE OF WALL. STAGGER CUT BARS.
3. CONT. WATERSTOP, GREENSTREAK PVC RIBBED WITH CENTER BULB, MODEL #735 PER MECH'L, (OR APPROVED EQUAL.)

NOTE:
LOCATION OF VERTICAL WALL C.J. TO BE AT A MAXIMUM OF TWICE THE WALL HEIGHT.

07 PLAN – WALL C.J.
NO SCALE

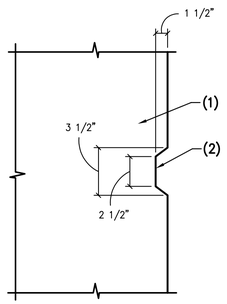

NOTES:
1. CONCRETE.
2. KEYED JOINT – REMOVE FORM MATERIAL PRIOR TO PLACING ADJACENT CONCRETE.

NOTE:
ALL DIMENSIONS ARE ± 1/2".

05 TYPICAL KEY IN CONCRETE
NO SCALE

NO	BY	DATE	REVISIONS	DATE	APP.

Registered Professional Engineer (Civil) CERTIFICATE NO. 70374 JAMES APPLEYARD 10/31/25 Date Signed ARIZONA, U.S.A.

PREPARED BY: PKA
DESIGNED BY: JA
DRAWN BY: NS
CHECKED BY: JA
DATE: SEP 2025
JOB NO.: 23364
SCALE: AS NOTED

TITLE: TYPICAL DETAILS

THESE DRAWINGS ARE THE PROPERTY OF P.A.C.E. AND SHALL NOT BE REPRODUCED IN ANY MANNER NOR BE USED FOR CONSTRUCTION UNLESS STAMPED "ISSUED FOR CONSTRUCTION".

JOB: TOWN OF JEROME WASTEWATER TREATMENT PLANT YAVAPAI AZ

ISSUED FOR BID

PREPARED BY: PACE Advanced Water Engineering
8723 E. VIA de VENTURA, SUITE 240, SCOTTSDALE, CA 85258
P: (480) 991-3995 | www.pacewater.com
TAYLOR B. PIERCE R.C.E 70097 DATE

SHEET S1.3
54 OF 99 SHEETS

JOB NO. 23364

PK ASSOCIATES, LLC
6900 E. Belleview Ave. #200
Greenwood Village, Colorado 80111
Phone: (720) 799-1058
Email: cadd@pkastructural.com
Website: www.pkastructural.com

NO	BY	DATE	REVISIONS	DATE	APP.

THESE DRAWINGS ARE THE PROPERTY OF P.A.C.E. AND SHALL NOT BE REPRODUCED IN ANY MANNER NOR BE USED FOR CONSTRUCTION UNLESS STAMPED "ISSUED FOR CONSTRUCTION".

NOMINAL BEAM DEPTH "D"	NUMBER OF 1" DIA. ASTM, F3125 BOLTS
UP TO 7"	2
8" – 11"	2
12" – 14"	3
15" – 17"	4
18" – 20"	5
21" – 23"	6
24" – 29"	7
30" – 32"	8
33" – 35"	9
36"	10

FRAMING NOTES:

1. THE TYPICAL STEEL BEAM TO STEEL COLUMN OR STEEL BEAM TO STEEL BEAM CONNECTION CONSISTS OF 3/8" SINGLE SHEAR PLATES WITH 1"ø. ASTM F3125 BOLTS. USE 5/8" SHEAR PLATES WHERE "D" = 27" OR GREATER.
2. ALL BOLTS SHALL BE INSTALLED USING SHORT SLOTTED HOLES IN EITHER THE BEAM WEB OR THE SHEAR PLATE PER LATEST AISC SPECIFICATIONS.

18 BOLT SCHEDULE FOR TYPICAL STEEL CONNECTIONS
NO SCALE

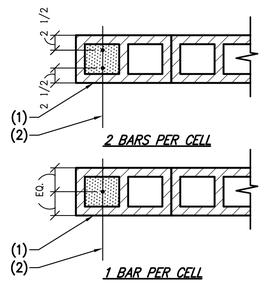

NOTES:

1. MASONRY WALL.
2. VERTICAL WALL REINFORCING.

NOTE:
SEE PLANS AND/OR TYPICAL DETAILS FOR NUMBER OF CELLS REINFORCED (GREATER REQUIREMENT GOVERNS).

15 TYPICAL REINFORCING PLACEMENT – EACH FACE
NO SCALE

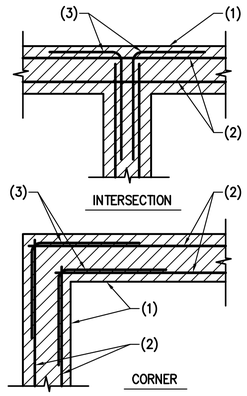

NOTES:

1. MASONRY WALL.
2. BOND BEAM REINFORCING.
3. CORNER BARS SAME SIZE AND SPACING AS HORIZONTAL REINFORCING – LAP PER G.S.N. (24" MINIMUM).

12 MASONRY BOND BEAM AT INTERSECTING WALLS
NO SCALE

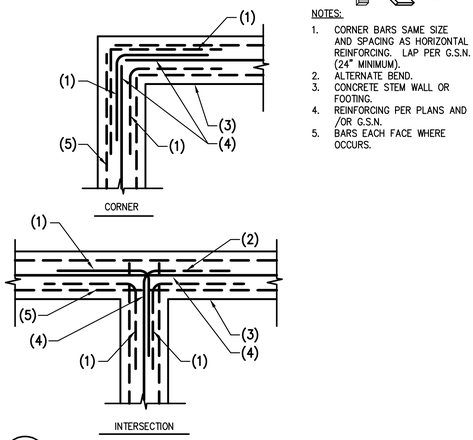

NOTES:

1. CORNER BARS SAME SIZE AND SPACING AS HORIZONTAL REINFORCING. LAP PER G.S.N. (24" MINIMUM).
2. ALTERNATE BEND.
3. CONCRETE STEM WALL OR FOOTING.
4. REINFORCING PER PLANS AND /OR G.S.N.
5. BARS EACH FACE WHERE OCCURS.

07 PLAN – CORNER REINFORCING IN CONCRETE GRADE BEAM WALL AND/OR FOOTING
NO SCALE

H	t	VERTICAL WALL REINFORCING		T	HEEL	TOE	FOOTING HEEL REINF.	SHEAR KEY		REMARKS
		WALL	DOWELS					Sd	Sw	
0'–0" TO 3'–0"	8"	#5 AT 18" O.C.	---	15"	0'–8"	0'–8"	---	---	---	SEE NOTE 1 & 2
3'–1" TO 5'–0"	8"	#5 AT 18" O.C.	---	12"	1'–1"	1'–1"	#5 AT 18" O.C.	12"	8"	SEE NOTE 1 & 2
5'–1" TO 7'–0"	8"	#5 AT 14" O.C.	---	12"	1'–7"	1'–6"	#5 AT 18" O.C.	24"	8"	SEE NOTE 1 & 2
7'–1" TO 9'–0"	8"	#5 AT 12" O.C.	#6 AT 12" O.C.	14"	2'–2"	2'–0"	#5 AT 12" O.C.	32"	8"	SEE NOTE 1 & 2
9'–1" TO 10'–0"	8"	#5 AT 12" O.C.	#7 AT 12" O.C.	20"	2'–8"	2'–6"	#5 AT 8" O.C.	32"	8"	SEE NOTE 1 & 2

NOTES:

1. USE #4 AT 12" O.C. HORIZONTALS.
2. LAP AND/OR EMBED ALL DOWELS 40 BAR DIAMETERS MINIMUM.

NOTE: REF DETAIL 20 FOR RETAINING WALLS ABOVE 10'–0" TALL

17 CONCRETE RETAINING WALL
NO SCALE

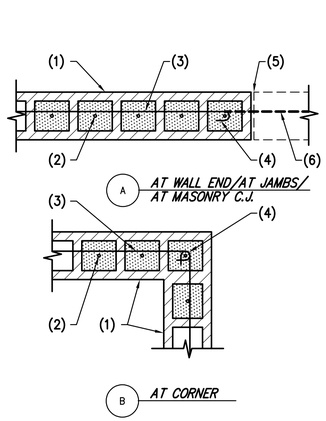

NOTES:

1. MASONRY WALL.
2. VERT. REINF. PER SCHEDULE.
3. HORIZ. REINF. PER SCHEDULE.
4. STANDARD HOOK PER TYP. DETAIL AT ENDS OF ALL WALLS.
5. MASONRY WALL AT C.J. AS OCCURS.
6. HORIZONTAL CONT. AT BOND BEAMS PER DETAIL 15.

16 PLAN VIEW – TYPICAL HORIZONTAL REINF. AT END OF WALL
NO SCALE

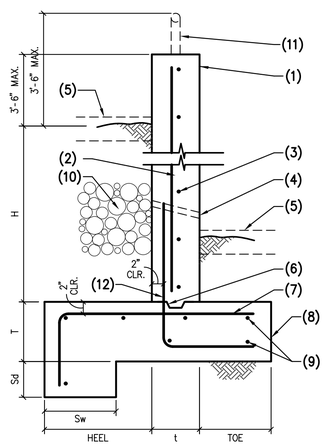

NOTES:

1. CONCRETE WALL.
2. VERTICAL WALL REINFORCING.
3. HORIZONTAL REINFORCING.
4. 1" DIA. WEEP HOLES AT 32" O.C.
5. FINISHED GRADE OR CONCRETE SLAB WHERE OCCURS.
6. CONTINUOUS KEY – SEE TYPICAL KEY IN CONCRETE DETAIL.
7. FOOTING HEEL REINFORCING.
8. CONCRETE FOOTING.
9. #4 AT 16" O.C.
10. 1 1/2" DIA. ROCK IN 12" X 12" X CONTINUOUS ROCK POCKET.
11. HANDRAIL ATTACHMENT BY OTHERS.
12. DOWELS TO MATCH AND LAP WALL REINFORCING U.N.O IN SCHEDULE.

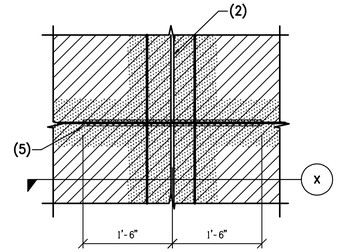

NOTES:

1. MASONRY WALL.
2. CONTROL JOINT.
3. CONTROL JOINT MATERIAL PER ARCHITECTURAL DRAWINGS AND SPECIFICATIONS.
4. 1 VERTICAL BAR EACH SIDE IN SOLID GROUTED CELLS TO MATCH VERTICAL WALL REINFORCING.
5. CONTINUOUS BOND BEAM BARS – WRAP BARS WITH MASTIC FOR BOND BREAK.

NOTE:
BOND BEAM BARS SHALL NOT BE LAPPED WITHIN 8'–0" OF CONTROL JOINT.

13 CONTROL JOINT IN MASONRY WALL
NO SCALE

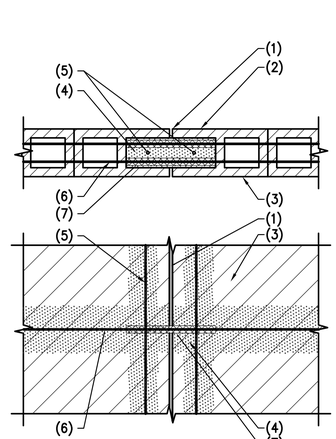

NOTES:

1. RAKE JOINT.
2. OPEN END MASONRY UNIT.
3. MASONRY WALL.
4. GROUT SOLID.
5. VERT. BAR EACH SIDE OF CONTROL JOINT TO MATCH VERT. WALL REINF.
6. HORIZ. REINF. CONT. THRU CONTROL JOINT.
7. WRAP HORIZ. BAR 8" EACH SIDE OF JOINT W/ MASTIC.

14 CONTROL JOINT IN MASONRY BEAM
NO SCALE

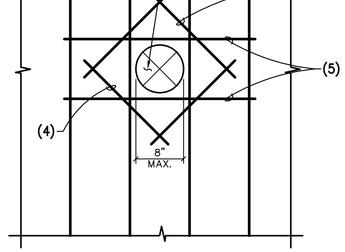

NOTES:

1. TYPICAL WALL REINF.
2. OPENING IN CONCRETE WALL.
3. CONCRETE WALL.
4. 1 – #5 DIAG. BARS IN THE CENTER OF WALL.
5. 1 – #5 TOP AND BOTTOM EACH FACE.

10 TYPICAL SMALL OPENING IN CONCRETE WALL
NO SCALE

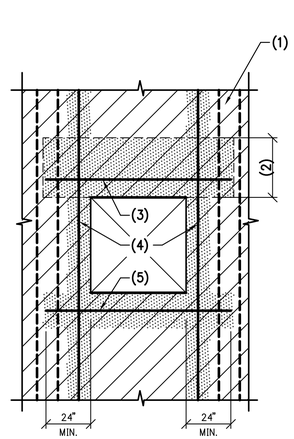

NOTES:

1. MASONRY WALL.
2. DEPTH OF MASONRY LINTEL BEAM – SEE PLANS AND DETAILS.
3. LINTEL REINFORCING.
4. VERTICAL BAR IN GROUTED CELL TO MATCH VERTICAL WALL REINFORCING – FULL HEIGHT OF WALL – SEE SCHEDULE BELOW, ONE BAR PER CELL.
5. 2 #5 BARS IN 8" DEEP SOLID GROUTED BOND BEAM – HOOK BARS UP AT CORNERS.

JAMB BARS	WALL OPENING
2	0'–0" → 4'–0"
3	4'–1" → 8'–0"
4	8'–1" → 10'–0"
5	10'–1" → 12'–0"
2 BARS IN FIRST 4 CELLS (8 BARS)	12'–1" → 16'–0"
2 BARS IN FIRST 6 CELLS (12 BARS)	16'–1" → 20'–0"
FOR OPENINGS LARGER THEN 20'–0" SEE PLAN. IF SPECIAL JAMB BARS ARE NOT SHOWN. USE WALL BRACES TO STRUCTURE.	

11 TYPICAL OPENING IN MASONRY WALL
NO SCALE

Registered Professional Engineer (Civil) CERTIFICATE NO. 70374 JAMES APPLEYARD 10/31/25 Date Signed ARIZONA, U.S.A.

PREPARED BY: PKA
DESIGNED BY: JA
DRAWN BY: NS
CHECKED BY: JA
SCALE: AS NOTED
DATE: SEP 2025
JOB NO.: 23364

TITLE: TYPICAL DETAILS

JOB: TOWN OF JEROME WASTEWATER TREATMENT PLANT YAVAPAI AZ

ISSUED FOR BID

PREPARED BY:
PACE
Advanced Water Engineering
8723 E. Via de Ventura, Suite A-200, Scottsdale, CA 85258
P: (408) 991-3595 | www.pacewater.com
TAYLOR B. PIERCE R.C.E 70097 DATE

SHEET
S1.4
55 OF 99 SHEETS

JOB NO. 23364

PK ASSOCIATES, LLC
6900 E. Belleview Ave. #200
Greenwood Village, Colorado 80111
Phone: (720) 799-1058
Email: cadd@pkastructural.com
Website: www.pkastructural.com

NOTES:

1. 8" CONCRETE WALL.
2. #7 DOWELS AT 8" O.C.
3. #5 AT 12" VERTICALS.
4. #4 AT 12" HORIZONTALS.
5. 28" MIN.
6. L2x2x1/4 W/ 1/2"ø H.S. AT 18" O.C.
7. GRATING AND ATTACHMENT BY OTHERS.
8. L3x3x1/4 WITH 1/2" HILTI KWIK HUS EZ SCREW ANCHORS AT 24" O.C.
9. CONCRETE FOOTING W/ #5 AT 12" O.C. E.W. TOP & BOTTOM.
10. 1/2"x8"x5" STEEL PLATE WITH 2- 1/2"ø H.S. AT 5" O.C.
11. HANDRAIL AND ATTACHMENT BY OTHERS.
12. CONCRETE SLAB OR FINISHED GRADE AS OCCURS.
13. WATERSTOP PER PACE PER SPECIFICATION SECTION 03 1500.

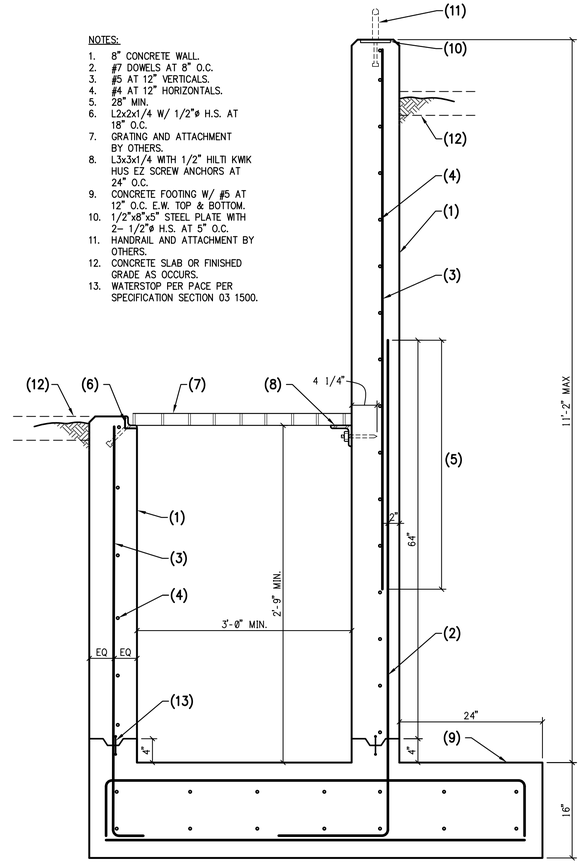

19 CONCRETE RETAINING WALL AT CHLORINE CONTACT CHANNEL
NO SCALE

NOTES:

1. 8" CONCRETE WALL.
2. #5 AT 12" O.C.
3. #8 AT 12" O.C.
4. 1" DIA. WEEP HOLES AT 32" O.C.
5. FINISHED GRADE OR CONCRETE SLAB WHERE OCCURS.
6. CONTINUOUS KEY – SEE TYPICAL KEY IN CONCRETE DETAIL.
7. #5 AT 8" O.C.
8. CONCRETE FOOTING.
9. HANDRAIL ATTACHMENT BY OTHERS.
10. 1 1/2" DIA. ROCK IN 12" X 12" X CONTINUOUS ROCK POCKET.

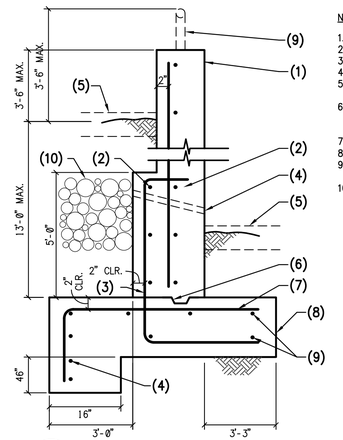

20 12'-0" TALL RETAINING WALL
NO SCALE

NO	BY	DATE	REVISIONS	DATE	APP.

Registered Professional Engineer (Civil) CERTIFICATE NO. 70374 JAMES APPLEYARD Date Signed 10/31/25 ARIZONA, U.S.A.

PREPARED BY: PKA
DESIGNED BY: JA
DRAWN BY: NS
CHECKED BY: JA
SCALE: AS NOTED
DATE: SEP 2025
JOB NO.: 23364

TITLE: TYPICAL DETAILS

JOB: TOWN OF JEROME WASTEWATER TREATMENT PLANT — YAVAPAI AZ

ISSUED FOR BID

PREPARED BY:
PACE
Advanced Water Engineering
8723 E. VIA DE COMMERCIO, 3RD FLOOR, SCOTTSDALE, CA 85258
P: (480) 991-3595 | W: www.pacewater.com
TAYLOR B. PIERCE — R.C.E. 70097 — DATE

SHEET
S1.5
56 OF 99 SHEETS

JOB NO. 23364

THESE DRAWINGS ARE THE PROPERTY OF P.A.C.E. AND SHALL NOT BE REPRODUCED IN ANY MANNER NOR BE USED FOR CONSTRUCTION UNLESS STAMPED "ISSUED FOR CONSTRUCTION".

FOR GENERAL PRICING INFORMATION ONLY, COMPLETE DESIGN AND SHOP DRAWINGS TO BE SUPPLIED AND SUBMITTED BY STUD SUPPLIER

PK ASSOCIATES, LLC
6900 E. Belleview Ave. #200
Greenwood Village, Colorado 80111
Phone: (720) 799-1058
Email: cadd@pkastructural.com
Website: www.pkastructural.com

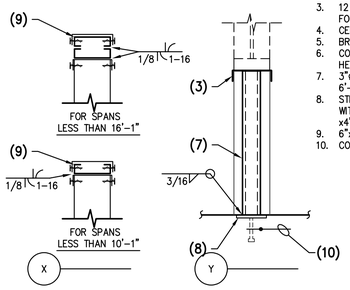

NOTES:
1. STEEL STUD.
2. STEEL HEADER PER SCHEDULE.
3. 12 GAGE STEEL STUD TRACK FOR SPANS LESS THAN 16'-1".
4. CEILING LINE.
5. BRACES PER DETAIL.
6. CONT. SPANDREL OPENING HEADER.
7. 3"ø. STEEL PIPE AT 6'-0" O.C.
8. STEEL PLATE 1/2"x5"x10" WITH 2- 1/2"ø HEADED STUDS x4" LONG AT 8" O.C.
9. 6"x16 GAGE (600 S200).
10. CONT. 1 #5 AT H.S.

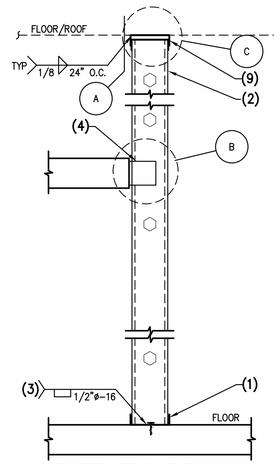

CF3 TYPICAL STEEL STUD ATTACHMENT

NO SCALE

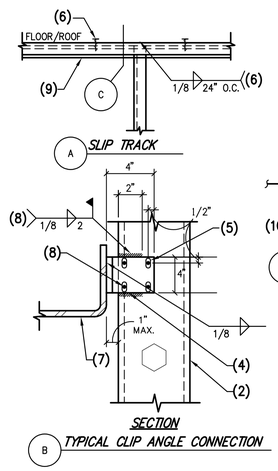

NOTES:
1. CONT. 16 GAGE "UNPUNCHED" STEEL TRACK. FOR ATTACHMENT SEE DETAIL 40.
2. STEEL STUD WALL.
3. USE 1/2"ø PUDDLE WELD AT 16" O.C. WHERE TRACK IS INSTALLED ON STEEL DECK (ROOF CONDITIONS).
4. STEEL CLIP ANGLE 4"x4"x12 GA. x 4" LONG AT EACH STUD.
5. PROVIDE 1" VERT. SLOTTED HOLE WHERE STUDS ARE FULL FLOOR HEIGHT.
6. HILTI SHOT PIN TO BOTTOM OF CONCRETE SLAB.
7. STEEL MEMBER (BENT PLATE AND BEAM FLANGE SHOWN OR CONTINUOUS EDGE ANGLE AT CONCRETE SLAB).
8. ALTERNATE TO WELD AT STUD TO CLIP ANGLE CONNECTION – 4 – #10 x 3/4" LONG SELF– TAPPING TEK SCREWS.
9. DEFLECTION TRACK TO ALLOW VERTICAL MOVEMENT – USE (2)– 16 GA. TRACKS BOTTOM TRACKS TO HAVE 2" LEGS. (ALLOW 3/4" DEFLECTION).
10. #10 x 3/4" LONG SELF–TAPPING SCREW EACH SIDE.

COLD FORMED STRUCTURAL STEEL FRAMING:

ALL COLD–FORMED STEEL FRAMING SHALL BE DESIGNED, FABRICATED AND ERECTED IN ACCORDANCE WITH MANUFACTURER'S RECOMMENDATIONS AND IN ACCORDANCE WITH THE LATEST EDITION OF "SPECIFICATIONS FOR THE DESIGN OF COLD–FORMED STEEL STRUCTURAL MEMBERS" BY THE AMERICAN IRON AND STEEL INSTITUTE.

STEEL FOR 14 AND 16 GAGE STUDS AND JOISTS, AND FOR ALL DIAGONAL TENSION STRAPS SHALL HAVE A MINIMUM YIELD STRENGTH OF 50 KSI. STEEL FOR ALL 18 AND 20 GAGE STUDS AND JOISTS, AND FOR ALL GAGES OF TRACK, ACCESSORIES AND BRIDGING SHALL HAVE A MINIMUM YIELD STRENGTH OF 33 KSI. STEEL SHALL BE GALVANIZED AT LOCATIONS EXPOSED TO WEATHER AND WHEREVER NOTED.

ALL STUD FRAMING (BOTH INTERIOR AND EXTERIOR) SHALL BE DESIGNED AND CONSTRUCTED TO ACCOMMODATE VERTICAL DEFLECTION OF THE STRUCTURE OF UP TO 1/2" LIVE LOAD DEFLECTION, UNLESS GREATER VALUE IS NOTED ON PLANS OR DETAILS. UTILIZE SLIP TRACK OR OTHER SIMILAR MEANS.

ALL STUDS SHALL BE SECURELY SEATED FOR FULL END BEARING ON TOP AND BOTTOM TRACK. UNLESS NOTED OTHERWISE, PROVIDE DOUBLE STUDS AT ALL JAMBS, CORNERS, INTERSECTIONS, BEAM BEARINGS AND JOIST BEARINGS. BRIDGING SHALL BE INSTALLED PER MANUFACTURER'S RECOMMENDATION WITH THE FOLLOWING MINIMUM REQUIREMENTS.

FOR WALLS WITH NO AXIAL LOAD, PROVIDE BRIDGING AT MID–HEIGHT FOR WALLS LESS THAN OR EQUAL TO 10'–0" HIGH, AND 5'–0" O.C. MAXIMUM FOR WALLS GREATER THAN 10'–0" HIGH. FOR AXIAL LOAD BEARING WALLS, PROVIDE BRIDGING EQUALLY SPACED AT 4'–0" MAXIMUM. IN ADDITION, BRIDGING SHALL BE PROVIDED AT ROOF LINES AND ELSEWHERE AS NOTED ON THE DRAWINGS. SOLID BLOCKING SHALL BE INSTALLED IN LIEU OF BRIDGING WHERE NOTED ON THE DRAWINGS.

STEEL STUD DETAILS AND GAGES DEPICATED ON STRUCTURAL DRAWINGS SHOW GENERAL STRUCTURAL REQUIREMENTS AND ARE FOR SCHEMATICS PURPOSE ONLY. THE CONTRACTOR SHALL BE REQUIRED TO SUBMIT SHOP DRAWINGS WITH DESIGN CALCULATIONS SEALED BY A REGISTERED ENGINEER FOR ALL STEEL STUD FRAMING AND ANY ADDITIONAL FRAMING MATERIALS REQUIRED FOR COMPLETE DESIGN SHALL BE INCORPORATED. CALCULATIONS SHALL INCLUDE DERIVATION OF WND LOADS PER SPECIFIED BUILDING CODE.

ALL WELDING SHALL BE PERFORMED BY WELDERS EXPERIENCED IN LIGHT GAGE STRUCTURAL STEEL FRAMING WORK. DO NOT NOTCH FLANGES OF JOISTS OR STUDS. DOUBLE UP FLOOR JOISTS AND BLOCKING UNDER PARTITIONS. PROVIDE BLOCKING AT SUPPORTS OF ALL JOISTS. DOUBLE UP STUDS AT JAMBS AND AS REQUIRED UNDER BEAMS IN BEARING WALLS.

TYPICAL STUDS SHALL BE DESIGNED FOR L/360 EXCEPT STUDS SUPPORTING VENEER SHALL BE DESIGN FOR MAXIMUM DEFLECTION OF L/600.

STEEL STUD SUPPLIER SHALL DESIGN AND SUPPLY STRUCTURAL STEEL AS REQUIRED FOR COMPLETE CONSTRUCTION OF VERTICAL WALL AWNINGS, SOFFITS, WING PLATES, FASCIA EXTENSIONS, ETC. ANY "RED METAL" OF FABRICATED STRUCTURAL STEEL REQUIRED TO COMPLETE WALL SYSTEMS SHALL BE DESIGNED AND INSTALLED BY STEEL STUD SUPPLIER.

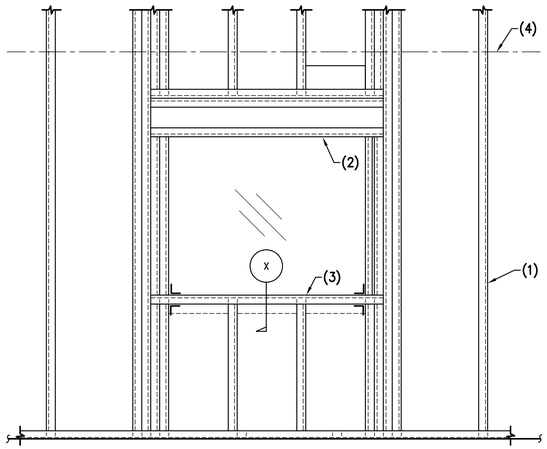

TYPICAL PUNCHED OPENING IN STUD WALL

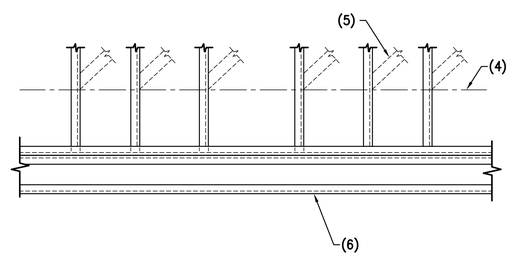

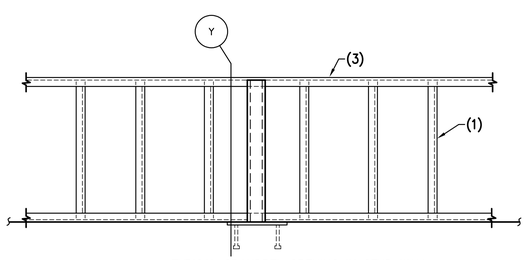

TYPICAL SPANDREL OPENING IN STUD WALL

CF7 TYPICAL OPENINGS IN STEEL STUD WALL

NO SCALE

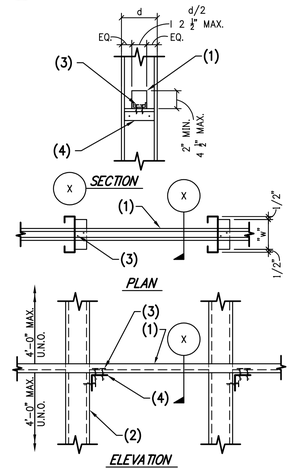

NOTES:
1. 1 1/2"x16GA.x 1/2" FLANGE CRC CONTINUOUS.
2. STUDS PER PLAN.
3. 2– #10 TEK SCREWS AT EACH STUD.
4. SIMPSON 'MSUBH3.25' CLIP WITH 2– #10 TEK SCREWS TO STUDS. ALT: L2x2x16GA.x 0'–5" LONG CLIP.

NOTE:
– 3– CRC BRIDGING PER FLOOR SEE TYPICAL DETAIL 56.
– AT LOCATIONS WHERE CRC IS INTERRUPTED SEE TYPICAL DETAIL 57.
– FOR TYPICAL NON–STRUCTURAL WALL BRIDGING SEE TYPICAL DETAIL 64.

CF6 TYPICAL BRIDGING DETAIL

NO SCALE

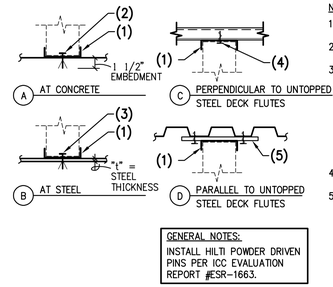

GENERAL NOTES:
INSTALL HILTI POWDER DRIVEN PINS PER ICC EVALUATION REPORT #ESR–1663.

NOTES:
1. STEEL TRACK. DEFLECTION TRACK AS OCCURS.
2. 3/8"ø SIMPSON DROP IN ANCHOR PER SCHEDULE.
3. 0.145ø HILTI X–EDNI POWDER DRIVEN PINS PER SCHEDULE. FOR "t"<1/2", FASTENERS MUST PENETRATE THRU STEEL BASE MATERIAL. FOR "t"=1/2", FASTENERS MUST PENETRATE 9/16" MIN. FOR "t">3/4", FASTENERS MUST PENETRATE 7/16" MIN.
4. #10x3/4" LONG TEKS SCREW PER SCHEDULE.
5. 12"x12x20 GAGE STEEL PLATE WITH 4 #10x 3/4" LONG TEKS SCREWS (ONE EACH CORNER). PLATE SPACING PER SCHEDULE.

TYPICAL TRACK ATTACHMENT

KEY	TYPE A	TYPE B	TYPE C	TYPE D
	ANCHOR SPACING	PIN SPACING	SCREW SPACING	PLATE SPACING
EXTERIOR	12" O.C.	12" O.C.	2 ROWS AT 6" O.C. (4" O.C. ROW SPACING)	12" O.C. (CONT. 12" WIDE PLATE)
INTERIOR	24" O.C.	16" O.C.	12" O.C.	48" O.C.

CF4 TYPICAL STEEL TRACK AT STRUCTURE

NO SCALE

MIN. STEEL STUD PROPERTIES GROSS

SIZE	GAGE	DESIGNATION	Sx(IN^3)	Ix(IN^4)	Fy (KSI)	SPACING	REMARKS L/360	REMARKS L/600
EXTERIOR								
8"	12	800S200–97	2.801	11.203	50	16" O.C.	27'–7"	23'–3"
8"	16	800S200–68	2.035	8.140	50	16" O.C.	24'–10"	20'–11"
6"	12	600S200–97	1.871	5.612	50	16" O.C.	21'–11"	18'–6"
6"	16	600S200–54	1.106	3.319	50	16" O.C.	18'–5"	15'–6"
6"	18	600S162–43	0.767	2.316	33	16" O.C.	16'–4"	13'–9"
6"	20	600S162–33	0.577	1.793	33	16" O.C.	13'–9"	12'–8"
INTERIOR								
6"	20–STRUCTURAL	600S162–33	0.598	1.793	33	16" O.C.	24'–0"	22'–0"
6"	20–STRUCTURAL	600S125–33	0.470	1.479	33	16" O.C.	22'–0"	20'–0"
ALL TRACKS SHALL BE SAME GAGE AS STUDS (18 GAGE MIN) W/ 2" FLANGE								

CF1 MINIMUM STEEL STUD PROPERTIES

NO SCALE

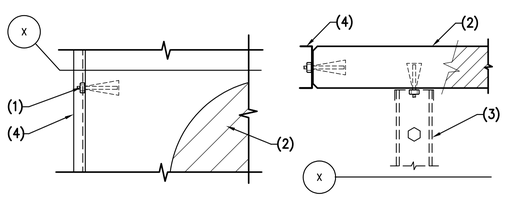

NOTES:
1. 1/2"ø EXP. BOLTS AT 24" O.C. DO NOT CUT VERTICAL REINFORCING.
2. CONCRETE OR MASONRY WALL.
3. LINE OF STEEL STUD WALL AS OCCURS.
4. STEEL STUDS.

CF5 TYPICAL STEEL STUD AT CONCRETE OR MASONRY WALL

NO SCALE

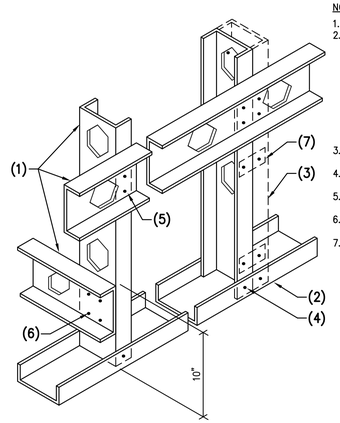

NOTES:
1. STEEL STUD.
2. UNPUNCHED STEEL STUD TRACK – ATTACHMENT REQUIRED 1 HILTI 3/4" LONG X–U TYPE POWDER DRIVEN PINS @ 8" O.C. (I.C.C. #ERS–1663) OR APPROVED EQUAL FOR ALL STUDS 6" OR SMALLER. FOR 8" STUDS USE 2 PINS AT 8: O.C. – TYP. U.N.O.
3. MULTIPLE STUDS WHERE SHOWN ON PLAN OR DETAILS.
4. #10x3/4" LONG TEKS SCREWS EACH SIDE.
5. 2 #10x3/4" LONG TEKS SCREWS.
6. 4 #10x3/4" LONG TEKS SCREWS.
7. 2"x20 GAGE FLAT STRAP BOTH SIDES AT 24" O.C. WITH 1 #10 SCREW AT EACH VERTICAL STUD.

CF2 TYPICAL STEEL STUD WALL – SCREW CONNECTION

NO SCALE

								APP.
								DATE
								REVISIONS
								DATE
								BY
								NO

Registered Professional Engineer
CERTIFICATE NO.
70374
JAMES
APPLEYARD
10/31/25
Date Signed
ARIZONA, U.S.A.

PREPARED BY: PKA
DESIGNED BY: JA
DRAWN BY: NS
CHECKED BY: JA
SCALE: AS NOTED
DATE: SEP 2025
JOB NO. 23364

THESE DRAWINGS ARE THE PROPERTY OF P.A.C.E. AND SHALL NOT BE REPRODUCED IN ANY MANNER NOR BE USED FOR CONSTRUCTION UNLESS STAMPED 'ISSUED FOR CONSTRUCTION'.

TITLE: TYPICAL DETAILS

JOB: TOWN OF JEROME
WASTEWATER
TREATMENT PLANT
YAVAPAI AZ

ISSUED FOR BID

PREPARED BY:
PACE
Advanced Water Engineering
8723 E. VIA de COMMERCIO #4, SCOTTSDALE, CA 85258
P: (480) 991-3595 | www.pacewater.com
TAYLOR B. PIERCE R.C.E 70097 DATE

SHEET
S1.6
57 OF 99 SHEETS

JOB NO. 23364

1733

FOR GENERAL PRICING INFORMATION ONLY, COMPLETE DESIGN AND SHOP DRAWINGS TO BE SUPPLIED AND SUBMITTED BY STUD SUPPLIER

PK ASSOCIATES, LLC
6900 E. Belleview Ave. #200
Greenwood Village, Colorado 80111
Phone: (720) 799-1058
Email: cadd@pkastructural.com
Website: www.pkastructural.com

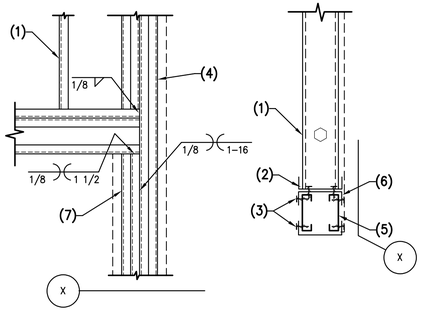

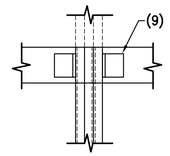

AT TOP OF STUD

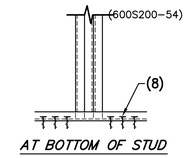

AT BOTTOM OF STUD

NOTES:

1. STEEL STUD WALL.
2. CONT. 16 GAGE TRACK W/ 2 – #12 TEK SCREWS AT 12" O.C. STAGGERED THROUGH TRACKS TO STUDS BELOW.
3. #12 TEK SCREWS AT 12" O.C., EACH LEG OF TRACK.
4. 2 (FULL HEIGHT) JAMB STUDS MIN. REFER TO SCHEDULE BELOW FOR ADDITIONAL STUDS WHERE REQUIRED.
5. STEEL HEADER PER SCHEDULE.
6. CONT. STEEL TRACK – TOP AND BOTTOM. REFER TO SCHEDULE FOR HEAVIER GAGE WHERE REQUIRED.
7. DOUBLE TRIMMER STUD, 16 GA. MIN. (ADD ONE ADDITIONAL STUDS AT EVERY 4'–0" OPENING. INCREASE AFTER 6'–0" WIDE).
8. TYPICAL PINS OR SCREWS AT 2" O.C. EACH SIDE FOR EVERY STUD IN THE GROUP.
9. TYPICAL CLIP ANGLE, ONE FOR EVERY TWO STUDS.

NOTE:

– FOR OPENING LARGER THAN SHOWN – SEE FRAMING PLAN
– ALL HEADER'S STUDS AND TRACKS SHALL BE UNPUNCHED MEMBERS.

OPENING	EXTERIOR WALLS		INTERIOR WALLS			
	HEADER SIZE (6" WALL)	JAMB STUDS (6" WALL)	HEADER SIZE		JAMB STUDS	
			4" WALL	6" WALL	4" WALL	6" WALL
0" – 4'–0"	2– 6"x20 GA (600S137–33) STUDS AND 2– 6"x18 GA (600T125–43) TRACKS	2– 6"x16 GA (600S200–54)	2– 6"x20 GA (600S137–33) STUDS AND 2– 4"x18 GA (400T125–43) TRACKS	2– 6"x20 GA (600S137–33) STUDS AND 2– 6"x18 GA (600T125–43) TRACKS	2– 4"x20 GA (400S137–33)	2– 6"x20 GA (600S137–33)
4'–1" – 6'–0"	2– 6"x20 GA (600S137–33) STUDS AND 2– 6"x18 GA (600T125–43) TRACKS	2– 6"x16 GA (600S200–54)	2– 6"x20 GA (600S137–33) STUDS AND 2– 4"x18 GA (400T125–43) TRACKS	2– 6"x20 GA (600S137–33) STUDS AND 2– 6"x18 GA (600T125–43) TRACKS	2– 4"x20 GA (400S137–33)	2– 6"x20 GA (600S137–33)
6'–1" – 8'–0"	2– 6"x18 GA (600S162–43) STUDS AND 2– 6"x18 GA (600T125–43) TRACKS	2– 6"x16 GA (600S200–54)	2– 6"x20 GA (600S137–33) STUDS AND 2– 4"x18 GA (400T125–43) TRACKS	2– 6"x20 GA (600S137–33) STUDS AND 2– 6"x18 GA (600T125–43) TRACKS	2– 4"x20 GA (400S137–33)	2– 6"x20 GA (600S137–33)
8'–1" – 10'–0"	2– 6"x16 GA (600S200–54) STUDS AND 2– 6"x18 GA (600T125–43) TRACKS	3– 6"x16 GA (600S200–54)	2– 6"x20 GA (600S137–33) STUDS AND 2– 4"x18 GA (400T125–43) TRACKS	2– 6"x20 GA (600S137–33) STUDS AND 2– 6"x18 GA (600T125–43) TRACKS	2– 4"x20 GA (400S137–33)	2– 6"x20 GA (600S137–33)
10'–1" – 12'–0"	3– 6"x16 GA (600S250–54) STUDS AND 2– 6"x16 GA (600T200–54) TRACKS	3– 6"x16 GA (600S200–54)	3– 6"x20 GA (600S137–33) STUDS AND 2– 4"x16 GA (400T150–54) TRACKS	3– 6"x20 GA (600S137–33) STUDS AND 2– 6"x18 GA (600T125–43) TRACKS	2– 4"x20 GA (400S137–33)	2– 6"x20 GA (600S137–33)
12'–1" – 14'–0"	3– 8"x16 GA (800S250–54) STUDS AND 2– 6"x14 GA (600T200–68) TRACKS	4– 6"x16 GA (600S200–54)	3– 8"x20 GA (800S137–33) STUDS AND 2– 4"x16 GA (400T200–54) TRACKS	3– 8"x20 GA (800S137–33) STUDS AND 2– 6"x18 GA (600T125–43) TRACKS	2– 4"x20 GA (400S137–33)	2– 6"x20 GA (600S137–33)
14'–1" – 16'–0"	3– 8"x14 GA (800S200–68) STUDS AND 3– 6"x14 GA (600T200–68) TRACKS	5– 6"x16 GA (600S200–54)	3– 8"x18 GA (800S137–43) STUDS AND 3– 4"x16 GA (400T200–54) TRACKS	3– 8"x18 GA (800S137–43) STUDS AND 2– 6"x18 GA (600T125–43) TRACKS	2– 4"x20 GA (400S162–33)	2– 6"x20 GA (600S137–33)
CONTINUOUS SPANDREL OPENING	2– 6"x18 GA (600S162–43) STUDS AND 2– 6"x18 GA (600T125–43) TRACKS	N/A USE BRACE PER DETAIL	2– 6"x20 GA (600S137–33) STUDS AND 2– 4"x18 GA (400T125–43) TRACKS	2– 6"x20 GA (600S137–33) STUDS AND 2– 6"x18 GA (600T125–43) TRACKS	N/A USE BRACE PER DETAIL	N/A USE BRACE PER DETAIL
DESIGN HEIGHT IS 16'–0" OR LESS, IF GREATER HEIGHT REQUIRED USE BRACES ACROSS OPENING. VERIFY BRACES ARE ABOVE CEILING LINE.						

CF6 *HEADER IN NON–BEARING STEEL STUD WALL*

NO SCALE

NO	BY	DATE	REVISIONS	DATE	APP.

THESE DRAWINGS ARE THE PROPERTY OF P.A.C.E. AND SHALL NOT BE REPRODUCED IN ANY MANNER NOR BE USED FOR CONSTRUCTION UNLESS STAMPED "ISSUED FOR CONSTRUCTION".

Registered Professional Engineer (Civil) CERTIFICATE NO. 70374 JAMES APPLEYARD 10/31/25 Date Signed ARIZONA, U.S.A.

PREPARED BY: PKA
DESIGNED BY: JA
DRAWN BY: NS
CHECKED BY: JA
SCALE: AS NOTED
DATE: SEP 2025
JOB NO.: 23364

TITLE: TYPICAL DETAILS

JOB: TOWN OF JEROME WASTEWATER TREATMENT PLANT YAVAPAI AZ

ISSUED FOR BID

PREPARED BY:
PACE
Advanced Water Engineering
8723 E. Via de Ventura Suite 260 | SCOTTSDALE, CA 85258
P: (480) 991-3995 | www.paceadvisor.com
TAYLOR B. PIERCE R.C.E 70097 DATE

SHEET S1.7
58 OF 99 SHEETS

JOB NO. 23364

PK ASSOCIATES, LLC
6900 E. Belleview Ave. #200
Greenwood Village, Colorado 80111
Phone: (720) 799-1058
Email: cadd@pkastructural.com
Website: www.pkastructural.com

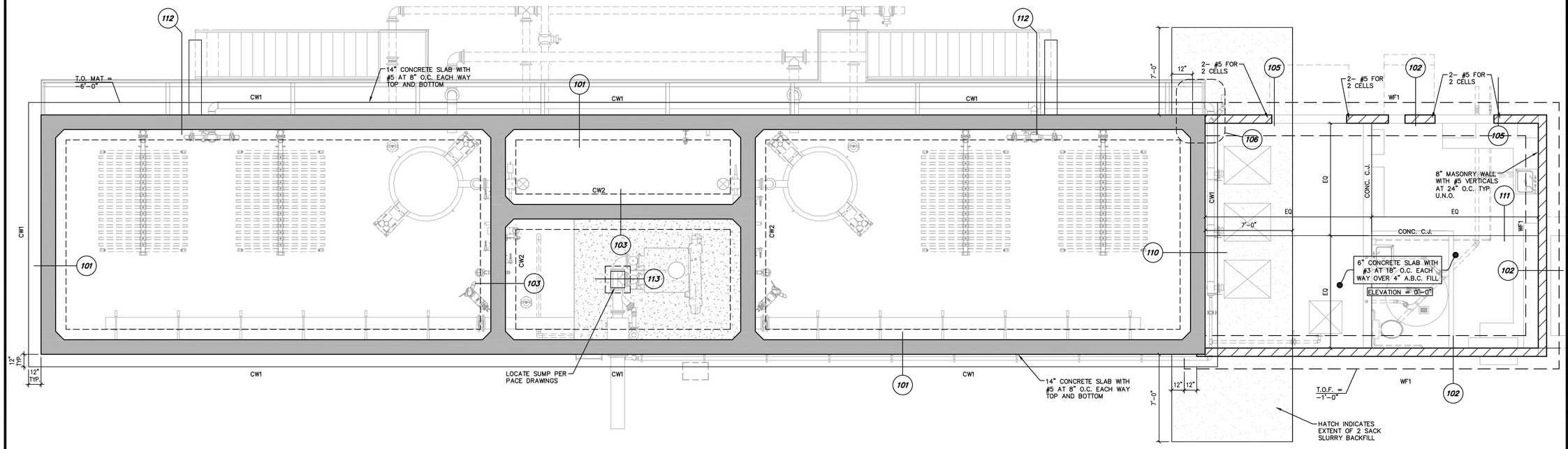

1 FOUNDATION PLAN

SCALE: 1/4"=1'-0"

CONCRETE WALL (CW) SCHEDULE

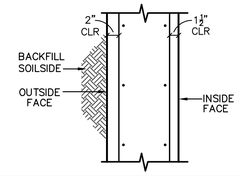

MARK	t	VERTICAL REINF. INSIDE FACE	VERTICAL REINF. OUTSIDE FACE	HORIZONTAL REINF. INSIDE FACE	HORIZONTAL REINF. OUTSIDE FACE	REMARKS
CW1	14"	#9 AT 6" O.C.	#5 AT 8" O.C.	#5 AT 8" O.C.	#5 AT 8" O.C.	TYP. U.N.O.
CW2	14"	#9 AT 6" O.C.	#9 AT 6" O.C.	#5 AT 8" O.C.	#5 AT 8" O.C.	TYP. U.N.O.

*NOTE: AT BOTTOM OF ALL WALLS PROVIDE SPECIAL HORIZONTAL REINFORCING AND U-BARS AT SHOWN IN DETAILS 119 AND 120 -TYPICAL

CONTINUOUS FOOTING (WF) SCHEDULE

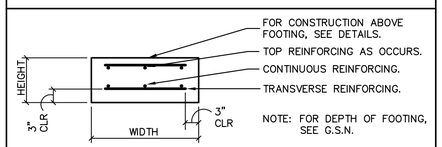

MARK	DIMENSIONS HEIGHT	DIMENSIONS WIDTH	FOOTING REINFORCING	REMARKS
WF1	12"	2'-6"	3- #5 CONTINUOUS	---

ISSUED FOR BID

PREPARED BY: PACE
Advanced Water Engineering
8723 E. Via de Commercio Suite 1 SCOTTSDALE, CA 85258
P: (480) 991-3595 | www.pacewater.com
TAYLOR B. PIERCE R.C.E 70097 DATE

NO	BY	DATE	REVISIONS	DATE	APP.

Registered Professional Engineer CERTIFICATE NO. 70374 JAMES APPLEYARD 10/31/25 Date Signed ARIZONA, U.S.A.

PREPARED BY: PKA
DESIGNED BY: JA
DRAWN BY: NS
CHECKED BY: JA
SCALE: AS NOTED
DATE: SEP 2025
JOB NO.: 23364

THESE DRAWINGS ARE THE PROPERTY OF P.A.C.E. AND SHALL NOT BE REPRODUCED IN ANY MANNER NOR BE USED FOR CONSTRUCTION UNLESS STAMPED 'ISSUED FOR CONSTRUCTION'.

TITLE: FOUNDATION PLAN

JOB: TOWN OF JEROME WASTEWATER TREATMENT PLANT YAVAPAI AZ

SHEET S2.00
59 OF 99 SHEETS

JOB NO. 23364

PK ASSOCIATES, LLC
6900 E. Belleview Ave. #200
Greenwood Village, Colorado 80111
Phone: (720) 799-1058
Email: cadd@pkastructural.com
Website: www.pkastructural.com

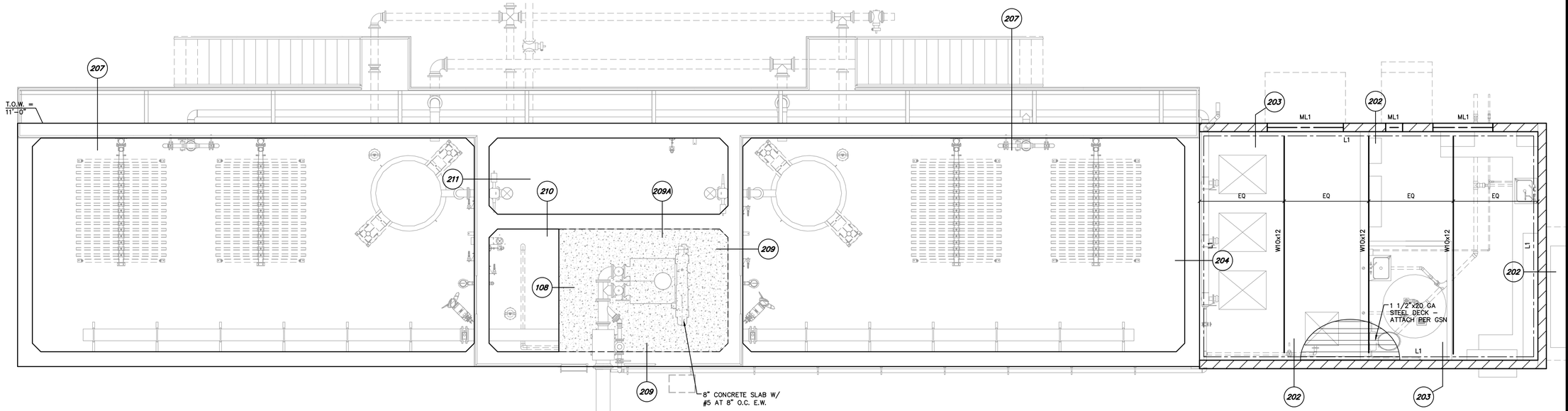

1 FRAMING PLAN

SCALE: 1/4"=1'-0"

LEDGER (L) SCHEDULE

STEEL: 1. ALL LEDGERS SHALL HAVE MINIMUM OF 2 WELD PLATES OR ANCHOR BOLTS AS NOTED BELOW.
2. WELD PLATES OR ANCHOR BOLTS SHALL BE LOCATED NOT LESS THAN 6" NOR MORE THAN 1'-4" FROM END OF LEDGER OR LEDGER SPLICE.

MARK	SIZE / TYPE	CONNECTION
L1	L4x4x1/4"	EMBED PER DETAIL 202 AND 204 AT 48" O.C.

MASONRY LINTEL (ML) SCHEDULE

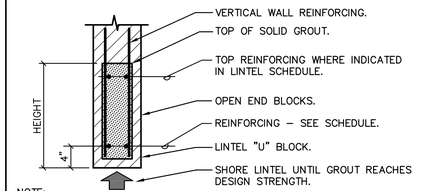

NOTE:
1. VERTICAL REINFORCING TO MATCH AND LAP WALL REINFORCING PER G.S.N.
2. EXTEND GROUT, OPEN END MASONRY UNITS AND REINFORCING 2'-0" PAST EACH JAMB. USE CORNER BARS WHERE 2'-0" CANNOT BE ACHIEVED.

MARK	HEIGHT	REINFORCING	REMARKS
ML1	16"	2- #5 BOTTOM	---

NO	BY	DATE	REVISIONS	DATE	APP.

Registered Professional Engineer (Civil) CERTIFICATE NO. 70374 JAMES APPLEYARD Date Signed 10/31/25 ARIZONA, U.S.A.

PREPARED BY: PKA
DESIGNED BY: JA
DRAWN BY: NS
CHECKED BY: JA
SCALE: AS NOTED
DATE: SEP 2025
JOB NO.: 23364

THESE DRAWINGS ARE THE PROPERTY OF P.A.C.E. AND SHALL NOT BE REPRODUCED IN ANY MANNER NOR BE USED FOR CONSTRUCTION UNLESS STAMPED "ISSUED FOR CONSTRUCTION".

TITLE: FRAMING PLAN

ISSUED FOR BID

JOB: TOWN OF JEROME WASTEWATER TREATMENT PLANT YAVAPAI AZ

PREPARED BY:
PACE
Advanced Water Engineering
8723 E. VIA de VENTURA, STE. 260 | SCOTTSDALE, CA 85258
P: (480) 991-3595 | www.paceadvi.com
TAYLOR B. PIERCE R.C.E 70097 DATE

SHEET S2.01
60 OF 99 SHEETS

JOB NO. 23364

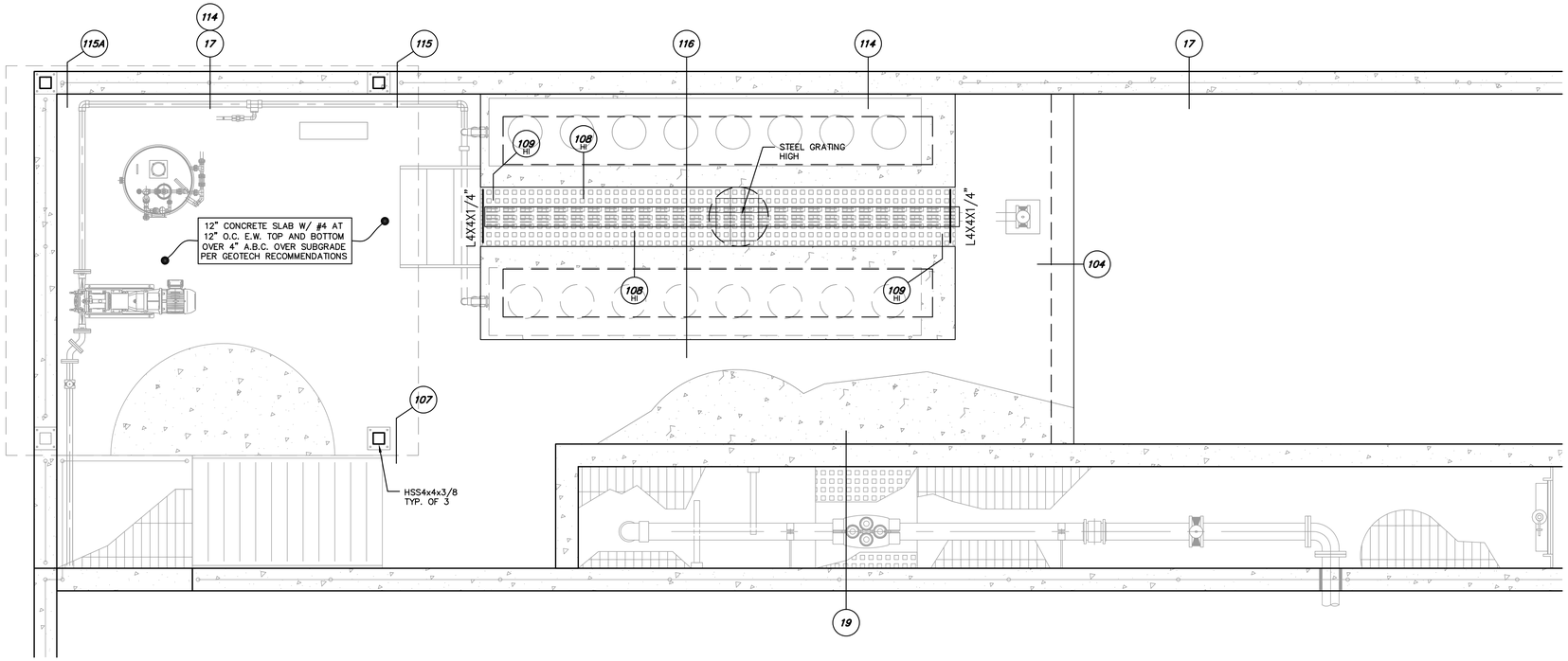

1 PLAN - DEWATERING PAD

SCALE: 1/2"=1'-0"

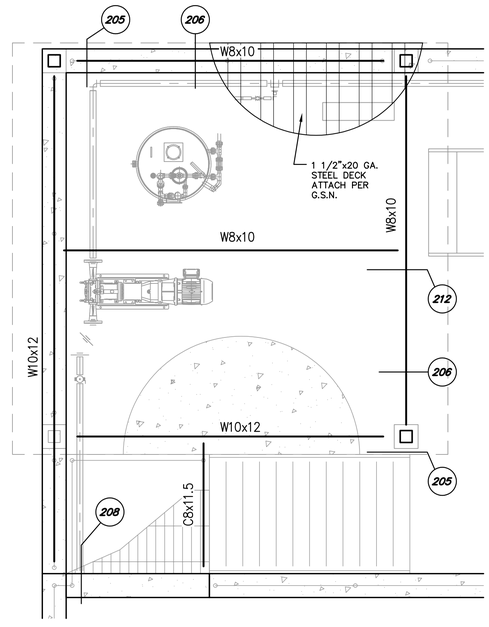

2 SHADE STRUCTURE - FRAMING PLAN

SCALE: 1/2"=1'-0"

PK ASSOCIATES, LLC
6900 E. Belleview Ave. #200
Greenwood Village, Colorado 80111
Phone: (720) 799-1058
Email: cadd@pkastructural.com
Website: www.pkastructural.com

NO	BY	DATE	REVISIONS	DATE	APP.

THESE DRAWINGS ARE THE PROPERTY OF P.A.C.E. AND SHALL NOT BE REPRODUCED IN ANY MANNER NOR BE USED FOR CONSTRUCTION UNLESS STAMPED "ISSUED FOR CONSTRUCTION".

Registered Professional Engineer (Civil)
CERTIFICATE NO.
70374
JAMES APPLEYARD
10/31/25
Date Signed
ARIZONA, U.S.A.

PREPARED BY: PKA
DESIGNED BY: JA
DRAWN BY: NS
CHECKED BY: JA
SCALE: AS NOTED
DATE: SEP 2025
JOB NO. 23364

TITLE: FRAMING PLAN

JOB: TOWN OF JEROME
WASTEWATER
TREATMENT PLANT
YAVAPAI AZ

ISSUED FOR BID

PREPARED BY:
PACE
Advanced Water Engineering
8723 E. VIA DE COMERCIO, STE A, SCOTTSDALE, CA 85258
P: (480) 991-3595 | W: www.pacewater.com
TAYLOR B. PIERCE R.C.E 70097 DATE

SHEET
S2.10
61 OF 99 SHEETS

JOB NO. 23364

NOTES:
1. CONCRETE SLAB/WALL.
2. CONT. L2x2x1/4" W/ 1/2"ø H.S. AT AT 18" O.C.
3. GRATING AND ATTACHMENT BY OTHERS.

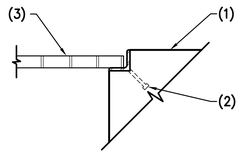

108 GRATING AT CONCRETE SLAB/WALL
NO SCALE

NOTES:
1. MASONRY WALL BEYOND.
2. CONCRETE SLAB WHERE OCCURS.
3. FINISHED GRADE.
4. SOLID GROUTED MASONRY STEM WALL AND CONCRETE FOOTING WITH REINFORCING CONTINUOUS FROM BEYOND.
5. CONCRETE SLAB ON GRADE, TOOLED EDGE AT OPENING.
6. DEPRESS STEM WALL 8" MIN.
7. VARIES – SEE PLANS FOR SIZE AND REINF.

NOTE:
– AT CONTRACTOR'S OPTION, USE CONCRETE STEM WALL W/ SAME REINFORCING.

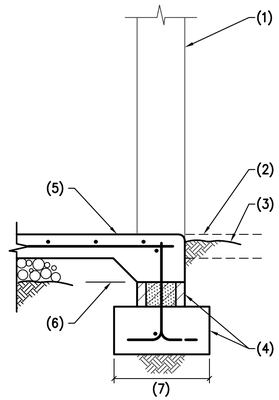

105 EXTERIOR MASONRY WALL FOOTING AT OPENING
NO SCALE

PK ASSOCIATES, LLC
6900 E. Belleview Ave. #200
Greenwood Village, Colorado 80111
Phone: (720) 799-1058
Email: cadd@pkastructural.com
Website: www.pkastructural.com

NOTES:
1. CONCRETE WALL.
2. CONCRETE FOOTING MAT SLAB
3. DOWELS TO MATCH AND LAP VERTICAL WALL REINFORCING.
4 CONCRETE SLAB OR FINISHED GRADE AS OCCURS.
5. CONTINUOUS KEYED JOINT.
6. 6" WATER STOP.
7. #5 BAR CONT. AT HOOK.
8. MIRA DRAIN BY CARLISE COATING AND WATERPROOFING, INC. OR APPROVED EQUAL.

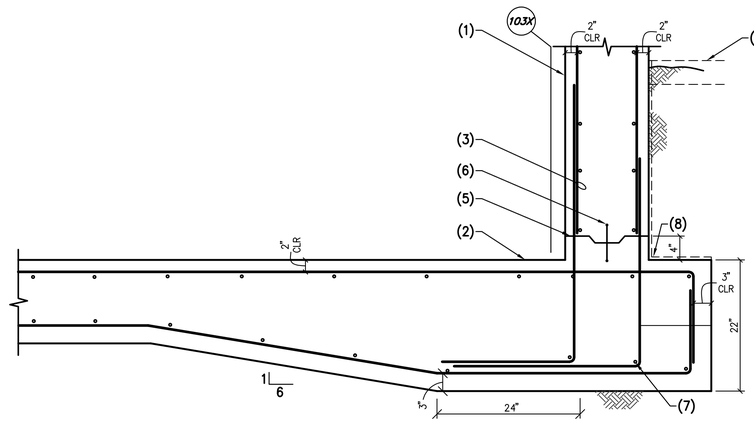

101 CONCRETE WALL AT EDGE OF MAT FOUNDATION
NO SCALE

NOTES:
1. CONCRETE WALL.
2. CONCRETE FOOTING.
3. FOOTING REINFORCING.
4. DOWELS TO MATCH AND LAP FOOTING REINFORCING.
5. 90° HOOK.

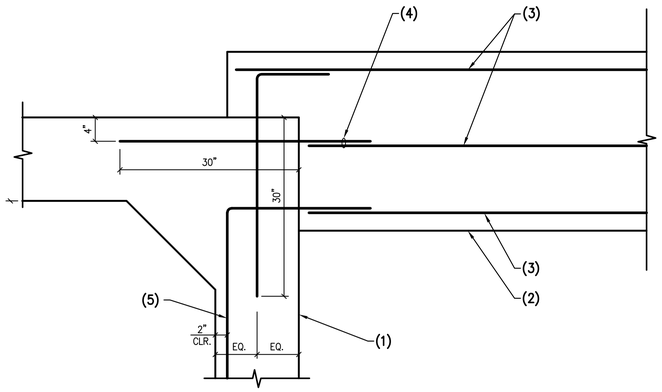

106 PLAN – CONCRETE FOOTING AT CONCRETE WALL
NO SCALE

NOTES:
1. STEEL ANGLE.
2. 1/4" STEEL PLATE.
3. GRATING AND ATTACHMENT BY OTHERS.

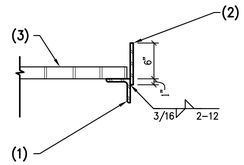

104 GRATING AT STEEL ANGLE
NO SCALE

NOTES:
1. 1 #4 CONTINUOUS.
2. FINISHED GRADE OR CONCRETE SLAB WHERE OCCURS.
3. CONCRETE FOOTING.
4. MASONRY WALL – GROUT SOLID BELOW GRADE.
5. DOWELS TO MATCH AND LAP VERTICAL WALL REINFORCING PER G.S.N. – ALTERNATE BENDS.
6. CONCRETE SLAB.
7. GRADE VARIES AS REQ'D. SOLID GROUT WALL BELOW GRADE.

NOTE:
AT CONTRACTOR'S OPTION, USE CONCRETE STEM WALL W/ SAME REINFORCING.

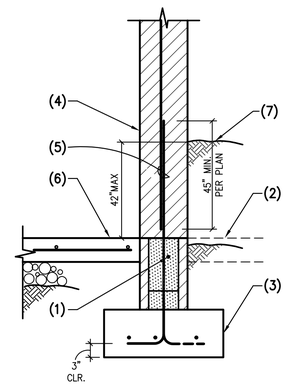

102 EXTERIOR MASONRY WALL FOOTING
NO SCALE

NOTES:
1. CONCRETE SLAB/WALL.
2. CONT. L2x2x1/4" STEEL ANGLE W/ 1/2"ø H.S. AT 4" O.C. AT STEEL ANGLE.
3. 1/2"x6"x6" STEEL PLATE W/ 2– 1/2"ø H.S. AT 4" O.C.
4. STEEL ANGLE.
5. GRATING AND ATTACHMENT BY OTHERS.

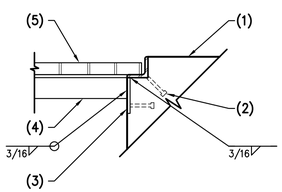

109 STEEL ANGLE AT CONCRETE WALL/SLAB
NO SCALE

NOTES:
1. STEEL COLUMN.
2. 1/2"x10"x10" STEEL PLATE W/ 4– 3/4"ø F1554 GR36 A.B. AT 7" O.C.
3. ±1 1/2" DRYPACK.
4. CONCRETE SLAB.

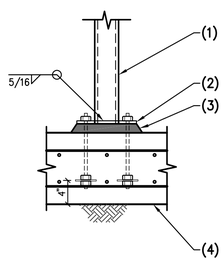

107 STEEL COLUMN AT CONCRETE SLAB
NO SCALE

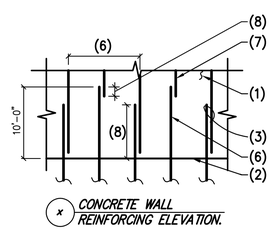

x CONCRETE WALL REINFORCING ELEVATION.

NOTES:
1. CONCRETE WALL.
2. CONCRETE FOOTING.
3. DOWELS TO MATCH AND LAP VERTICAL WALL REINFORCING.
4 #5 BAR CONTINUOUS AT HOOK.
5. CONTINUOUS KEYED JOINT.
6. DOWEL TO MATCH SCHEDULED WALL REINFORCING.
7. EVER OTHER VERTICAL BAR MAY LAP W/ A #5.
8. CLASS "B" TENSION LAP.

103 CONCRETE WALL AT MAT FOUNDATION
NO SCALE

ISSUED FOR BID

PREPARED BY:
PACE
Advanced Water Engineering
8723 E. VIA de VENTURA, SUITE 200 | SCOTTSDALE, CA 85258
P: (480) 991-3995 | www.pacewater.com
TAYLOR B. PIERCE R.C.E 70097 DATE

SHEET
S3.1
62 OF 99 SHEETS

JOB NO. 23364

NO	BY	DATE	REVISIONS	DATE	APP.

Registered Professional Engineer (Civil) CERTIFICATE NO. 70374 JAMES APPLEYARD 10/31/25 Date Signed ARIZONA, U.S.A.

PREPARED BY:	PKA			
DESIGNED BY:	JA			
DRAWN BY:	NS	SCALE:	AS NOTED	
CHECKED BY:	JA	DATE	SEP 2025	
		JOB NO.	23364	

THESE DRAWINGS ARE THE PROPERTY OF P.A.C.E. AND SHALL NOT BE REPRODUCED IN ANY MANNER NOR BE USED FOR CONSTRUCTION UNLESS STAMPED "ISSUED FOR CONSTRUCTION".

TITLE
FOUNDATION DETAILS

JOB
TOWN OF JEROME
WASTEWATER
TREATMENT PLANT
YAVAPAI AZ

PK ASSOCIATES, LLC
6900 E. Belleview Ave. #200
Greenwood Village, Colorado 80111
Phone: (720) 799-1058
Email: cadd@pkastructural.com
Website: www.pkastructural.com

NOTES:
1. CONCRETE SLAB.
2. ALUMINUM GRATING.
3. 6" CONCRETE WALL/ SLAB W/ #4 AT 6"O.C. E.W.
4. WATERSTOP PER PACE DRAWINGS.
5. L3x3x1/4 W/ 1/2"ø HILTI SS KWIK BOLT T2 SCREW ANCHOR, OR APPROVED EQUAL. 2 ANCHORS EACH SIDE AT 9" O.C.

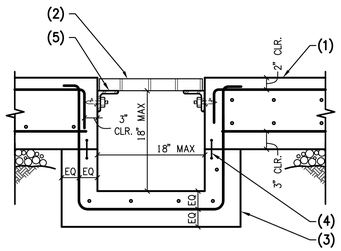

113 SUMP PIT AT CONCRETE SLAB
NO SCALE

NOTES:
1. CONCRETE WALL.
2. CONCRETE SLAB.
3. #5x30"x12" AT 12" O.C.
4. CONT. #5 AT BEND.

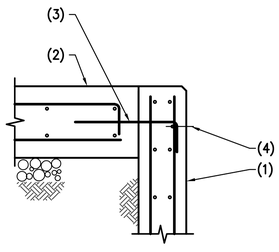

114 CONCRETE SLAB AT CONCRETE WALL
NO SCALE

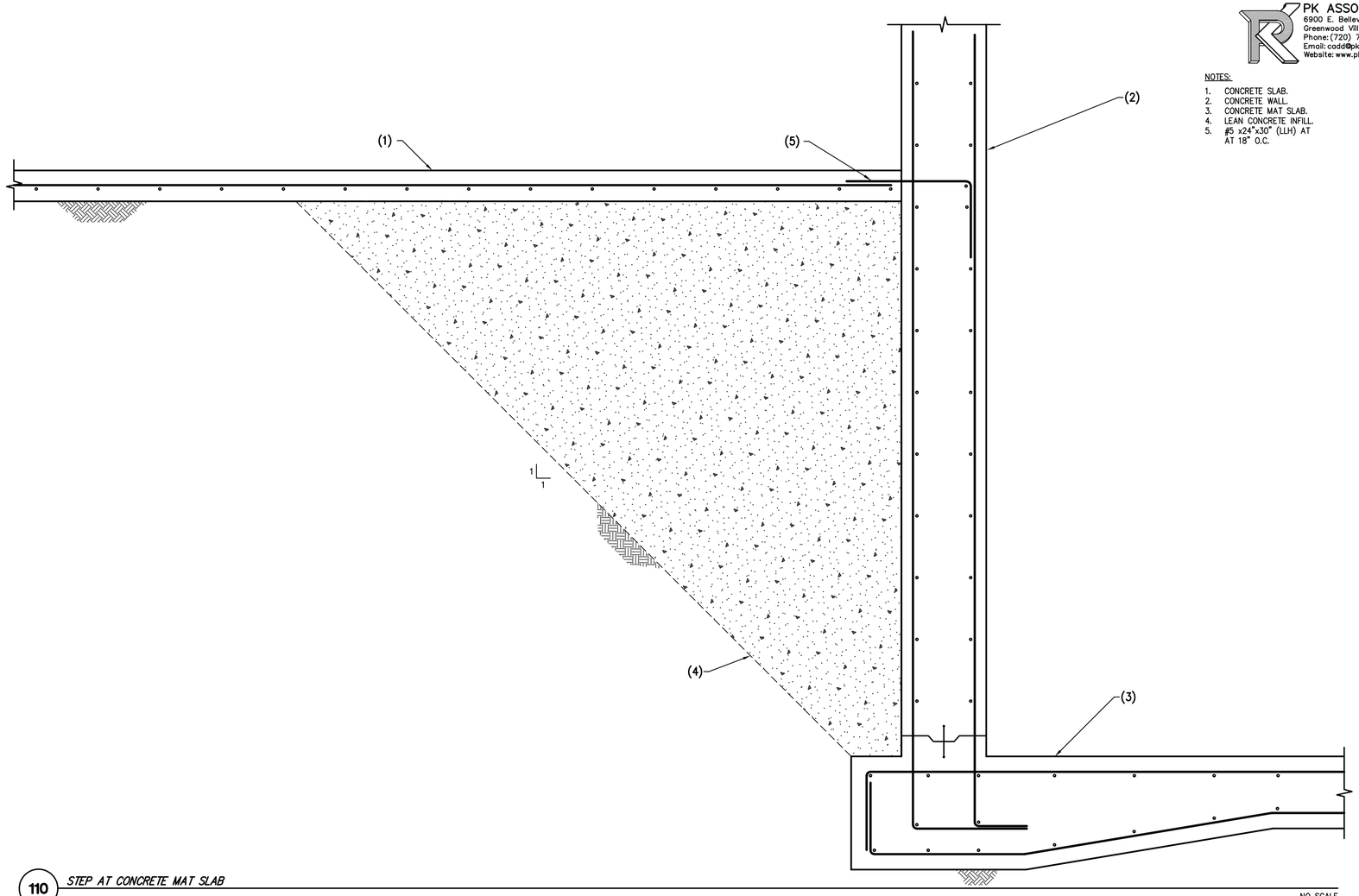

110 STEP AT CONCRETE MAT SLAB
NO SCALE

NOTES:
1. CONCRETE WALL.
2. CONCRETE WALL.
3. CONCRETE MAT SLAB.
4. LEAN CONCRETE INFILL.
5. #5 x24"x30" (LLH) AT AT 18" O.C.

NOTES:
1. CONCRETE WALL.
2. CONCRETE SLAB.
3. #5x30"x12" AT 12" O.C.
4. CONT. #5 AT BEND.
5. STEEL POST.
6. 1/2"x12"x6" STEEL PLATE W/ 2– #5x30" A706 WELDABLE REBAR AT 9" O.C. AND 3/4"ø H.S. CENTERED.
7. 1/2" STEEL PLATE.
8. 2– #5x30" A706 WELDABLE REBAR.
9. 3/4"ø H.S.

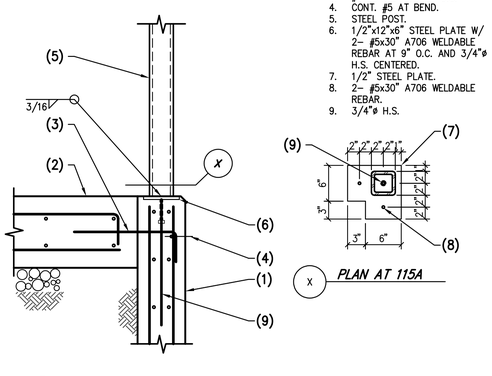

115 CONCRETE SLAB AT CONCRETE WALL
115A AS NOTED
NO SCALE

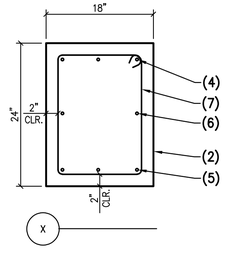

112 STAIR FOOTING AT CONCRETE WALL
NO SCALE

NOTES:
1. CONCRETE WALL.
2. STAIR CONCRETE FOOTING.
3. DOWELS TO MATCH AND LAP FOOTING REINFORCING.
4. 4– #6 TOP.
5. 3– #5 BOTTOM.
6. #5 EACH FACE.
7. #4 AT 12" O.C.

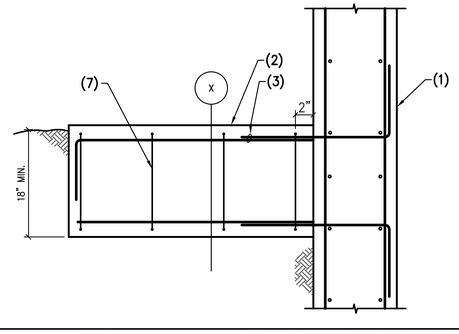

NOTES:
1. CONCRETE SLAB ON GRADE.
2. SAWCUT – 1/8" WIDE x 1/4 SLAB THICKNESS IN DEPTH – CUT SHALL BE MADE SOON ENOUGH TO PREVENT SHRINKAGE CRACKING, BUT NOT SO SOON AS TO CAUSE SPALLING OF THE CONCRETE WHILE SAWING. WORK MUST BE ACCOMPLISHED WITHIN 24 HOURS OF CONCRETE PLACEMENT.
3. CONTINUOUS KEY – SEE TYPICAL KEY IN CONCRETE DETAIL.
4. CUT 1/2" REINFORCEMENT ACROSS C.J. DO NOT CUT AT RAMP.

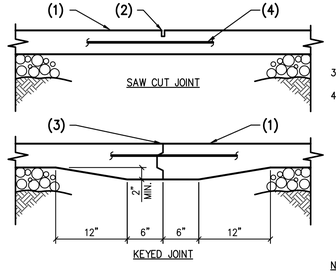

NOTE:
KEYED JOINTS NEED ONLY OCCUR AT EXPOSED EDGES DURING PLACEMENT UNLESS SPECIFICALLY NOTED ON THE PLANS. "TOOL WET JOINT", "ZIP STRIP", ETC. SHALL MATCH SAWCUT REQUIREMENTS.

111 CONTROL JOINTS IN CONCRETE SLAB ON GRADE
NO SCALE

NO	BY	DATE	REVISIONS	DATE	APP.

70374 JAMES APPLEYARD
Registered Professional Engineer
CERTIFICATE NO.
Date Signed 10/31/25
ARIZONA, U.S.A.

PREPARED BY: PKA
DESIGNED BY: JA
DRAWN BY: NS
CHECKED BY: JA
SCALE: AS NOTED
DATE: SEP 2025
JOB NO.: 23364

THESE DRAWINGS ARE THE PROPERTY OF P.A.C.E. AND SHALL NOT BE REPRODUCED IN ANY MANNER NOR BE USED FOR CONSTRUCTION UNLESS STAMPED "ISSUED FOR CONSTRUCTION".

TITLE: FOUNDATION DETAILS

JOB: TOWN OF JEROME
WASTEWATER
TREATMENT PLANT
YAVAPAI AZ

ISSUED FOR BID

PREPARED BY:
PACE
Advanced Water Engineering
8723 E. VIA DE COMMERCIO, 3RD FLOOR, SCOTTSDALE, CA 85258
P: (480) 991-3595 | W: www.pacewater.com
TAYLOR B. PIERCE R.C.E. 70097 DATE

SHEET S3.2
63 OF 99 SHEETS

JOB NO. 23364

PK ASSOCIATES, LLC
6900 E. Belleview Ave. #200
Greenwood Village, Colorado 80111
Phone: (720) 799-1058
Email: cadd@pkastructural.com
Website: www.pkastructural.com

NOTES:

1. CONCRETE SLAB.
2. 8" CONCRETE WALL/SLAB W/ #5 AT 12" O.C. EACH WAY.
3. HIGH DENSITY FOAM.
4. GRATING AND ATTACHMENT PER SHEET M5.3.
5. DOWELS TO MATCH AND LAP WALL REINFORCING.
6. 2 CONT. #4.
7. #4x60" AT 12" O.C.
8. EQUIPMENT AND ATTACHMENT BY OTHERS.
9. CONCRETE WALL.

116 SECTION – DEWATERING PLAN

NO SCALE

NO	BY	DATE	REVISIONS	DATE	APP.

THESE DRAWINGS ARE THE PROPERTY OF P.A.C.E. AND SHALL NOT BE REPRODUCED IN ANY MANNER NOR BE USED FOR CONSTRUCTION UNLESS STAMPED "ISSUED FOR CONSTRUCTION".

Registered Professional Engineer (Civil)
CERTIFICATE NO.
70374
JAMES APPLEYARD
10/31/25
Date Signed
ARIZONA, U.S.A.

PREPARED BY: PKA
DESIGNED BY: JA
DRAWN BY: NS
CHECKED BY: JA
DATE: SEP 2025
JOB NO.: 23364
SCALE: AS NOTED

TITLE: **FOUNDATION DETAILS**

JOB: TOWN OF JEROME
WASTEWATER
TREATMENT PLANT
YAVAPAI AZ

ISSUED FOR BID

PREPARED BY:
PACE
Advanced Water Engineering
8723 E. VIA DE COMERCIO, STE A-104, SCOTTSDALE, CA 85258
P.: (480) 991-3595 | www.pacewater.com
TAYLOR B. PIERCE R.C.E 70097 DATE

SHEET
S3.3
64 OF 99 SHEETS

JOB NO. 23364

PK ASSOCIATES, LLC
6900 E. Belleview Ave. #200
Greenwood Village, Colorado 80111
Phone: (720) 799-1058
Email: cadd@pkastructural.com
Website: www.pkastructural.com

NOTES:
1. CONCRETE WALL.
2. CONCRETE SLAB.
3. #5x 36" ⌐ 36" AT SPACING TO MATCH SLAB REINFORCING.
4. CONT. BAR AT HOOK.
5. GRATING AT 209A PER DETAIL 108.

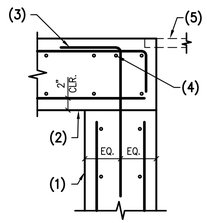

209 CONCRETE WALL AT CONCRETE WALL
209A AS NOTED
NO SCALE

NOTES:
1. STEEL BEAM.
2. STEEL DECK – SEE PLANS FOR DIRECTION.
3. 1/4" CONTINUOUS BENT PLATE.

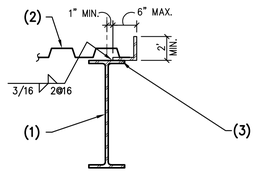

206 STEEL ROOF DECK AT STEEL BEAM
NO SCALE

NOTES:
1. CONCRETE WALL.
2. 1/2"x8"x4" STEEL PLATE W/ 2– 1/2"ø H.S. AT 5" O.C.
3. CONTINUOUS LEDGER ANGLE.
4. STEEL DECK.

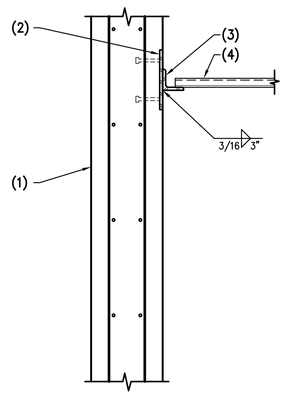

204 LEDGER ANGLE AND STEEL DECK AT CONCRETE WALL
NO SCALE

NOTES:
1. STEEL LEDGER ANGLE – FOR SIZE AND LOCATION, SEE PLAN.
2. STEEL PLATE 1/2"x3"x12" LONG.
3. STEEL PLATE 1/2"x3".

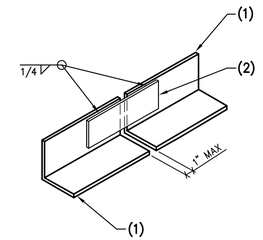

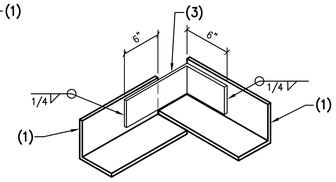

AT CORNERS

201 TYPICAL SPLICE IN CONTINUOUS STEEL LEDGER ANGLE
NO SCALE

NOTES:
1. CONCRETE WALL.
2. CONT. L2x2x1/4" W/ 1/2"ø H.S. AT 18" O.C.
3. GRATING AND ATTACHMENT BY OTHERS.

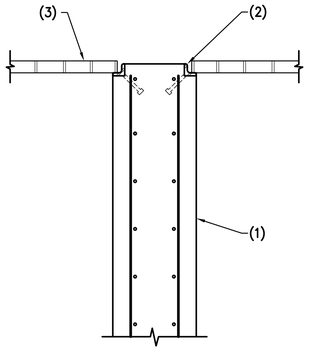

210 STEEL GRATING AT CONCRETE WALL
NO SCALE

NOTES:
1. CONCRETE WALL.
2. C6x8.2 AT 4'–0" O.C. MAX.
3. CONT. L4x4x1/4.
4. CONT. L2x2x1/4" W/ 1/2"ø H.S. AT 18" O.C.
5. GRATING AND ATTACHMENT BY OTHERS.
6. COPE TOP FLANGE.
7. 1/2"x8"x8" STEEL PLATE W/ 2– 3/4"ø H.S. AT 5" O.C.
8. 3– 3/4"ø H.S. AT 4" O.C. CENTERED ON CHANNEL.
9. HANDRAIL POST AND ATTACHMENT BY OTHERS. (4'–0" O.C. MAX).
10. 1/2"x8"x4" STEEL PLATE W/ 2– 3/4"ø H.S. AT 5" O.C.

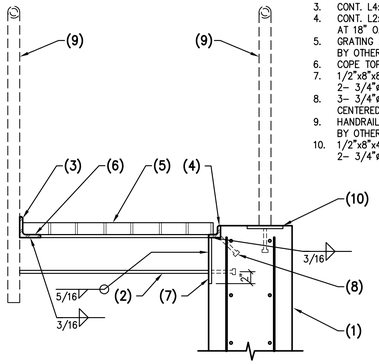

207 WALKWAY AT CONCRETE WALL
NO SCALE

NOTES:
1. HSS SQUARE OR RECTANGULAR COLUMN.
2. STEEL BEAM.
3. STEEL SHEAR PLATE. SEE TYP. BOLT SCHEDULE.
4. FOR SIZE, TYPE, AND NUMBER OF BOLTS, REFER TO TYP. BOLT SCHEDULE.
5. 1/2" STEEL CAP PLATE.
6. AT t ≤ 1/4" USE FILLET WELD SIZE TO MATCH "t". AT t > 1/4" USE 5/16" FILLET.
7. 1/2" STEEL BACKER PLATE x BEAM DEPTH x WIDTH OF COLUMN LESS 1".
8. TOP OF COLUMN AS OCCURS.
9. DEPTH TO MATCH JOIST SHOE.
10. BEAM BOTH SIDES WHERE OCCURS.

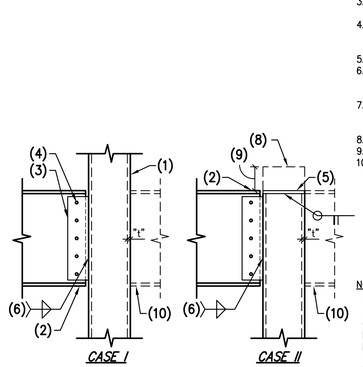

NOTES:
–DETAIL A MAY BE USED TYP. U.N.O.
–DETAIL B MAY BE USED AT CONTRACTOR'S OPTION WHERE HSS MIN. FLANGE THICKNESSES ARE MET PER SCHEDULE.
–WHERE COLUMNS ARE RECTANGULAR IN LIEU OF SQUARE, THE GREATER FLANGE LENGTH (I.E. WORST CASE) APPLIES PER SCHEDULE.
–CONTRACTOR MAY INCREASE PLAN COLUMN THICKNESS AT THEIR OPTION.

B SHEAR PLATE TO COLUMN

MINIMUM COLUMN FLANGE THICKNESS FOR DETAIL B

HSS MEMBER	THICKNESS ("t")
4x4	1/4"
5x5	1/4"
6x6	1/4"
7x7	1/4"
8x8	5/16"
9x9	5/16"
10x10	3/8"
12x12	3/8"
14x14	1/2"
16x16	1/2"

NOTES:
1. MASONRY WALL.
2. CONTINUOUS GROUTED BOND BEAM PER G.S.N.
3. CONTINUOUS LEDGER ANGLE.
4. STEEL DECK – FOR DIRECTION, SEE PLAN.
5. 1/2"x8"x4" STEEL PLATE W/ 2– 1/2"ø H.S. AT 5" O.C.

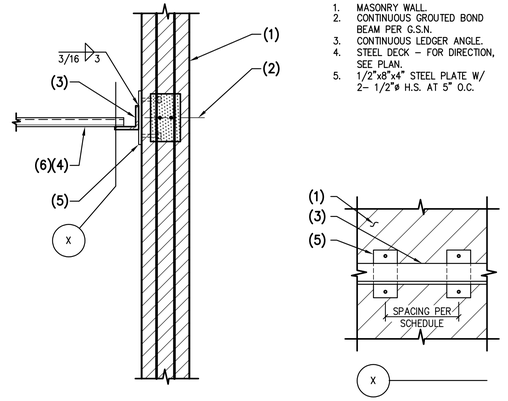

202 LEDGER ANGLE AND STEEL DECK AT MASONRY WALL
NO SCALE

NOTES:
1. CONCRETE WALL.
2. CONT. L2x2x1/4" W/ 1/2"ø H.S. AT 18" O.C.
3. GRATING AND ATTACHMENT BY OTHERS.
4. 1/2"x8"x4" STEEL PLATE W/ 2– 3/4"ø H.S. AT 5" O.C.
5. HANDRAIL POST AND ATTACHMENT BY OTHERS. (4'–0" O.C. MAX).

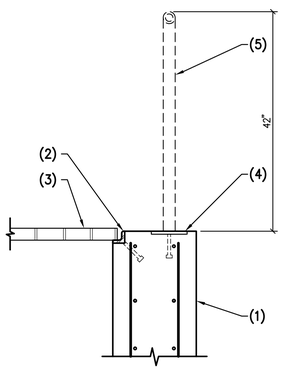

211 EDGE OF GRATING AT CONCRETE WALL
NO SCALE

NOTES:
1. STEEL BEAM.
2. CONCRETE WALL.
3. 3/8" STEEL SHEAR TAB.
4. 2– 1"ø BOLTS.
5. 1/2"x6"x14" STEEL PLATE W/ 3– 3/4"ø H.S. AT 5" O.C.

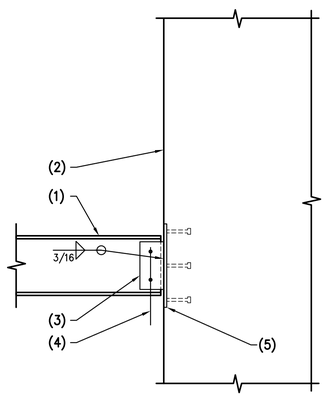

208 STEEL BEAM AT CONCRETE WALL
NO SCALE

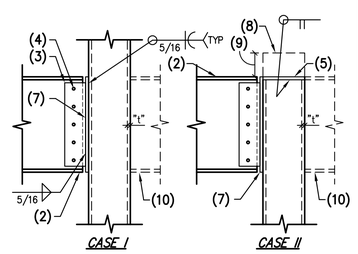

A SHEAR PLATE TO BACKER PLATE TO COLUMN

205 TYPICAL BEAM TO HSS STEEL COLUMN
NO SCALE

NOTES:
1. MASONRY WALL.
2. CONTINUOUS 8" DEEP GROUTED BOND BEAM.
3. SOLID GROUT 6" ALL AROUND ALL ANCHORS.
4. STEEL PLATE PER SCHEDULE BELOW.
5. STEEL BEAM.
6. 3/8" STEEL PLATE.
7. 1 1/2" SLOTTED HOLES.
8. FOR SIZE, TYPE, AND NUMBER OF BOLTS SEE TYPICAL BOLT SCHEDULE.

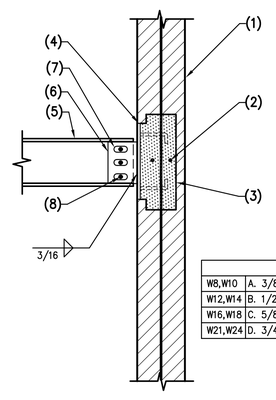

EMBED PLATE SCHEDULE	
W8,W10	A. 3/8"x4"x12" WITH 2– 3/4"ø H.S. AT 9" O.C.
W12,W14	B. 1/2"x8"x14" WITH 4– 3/4"ø H.S. AT 5"x11" O.C.
W16,W18	C. 5/8"x11"x19" WITH 6– 3/4"ø H.S. AT 8" O.C.
W21,W24	D. 3/4"x11"x27" WITH 8– 3/4"ø H.S. AT 8" O.C.

203 STEEL BEAM TO MASONRY WALL CONNECTION
NO SCALE

NO	BY	DATE	REVISIONS	DATE	APP.

Registered Professional Engineer (Civil)
CERTIFICATE NO.
70374
JAMES APPLEYARD
10/31/25
Date Signed
ARIZONA, U.S.A.

PREPARED BY: PKA
DESIGNED BY: JA
DRAWN BY: NS
CHECKED BY: JA
SCALE: AS NOTED
DATE: SEP 2025
JOB NO.: 23364

TITLE: FRAMING DETAILS

JOB: TOWN OF JEROME WASTEWATER TREATMENT PLANT
YAVAPAI AZ

PREPARED BY:
PACE
Advanced Water Engineering
8723 E. Via de Ventura Suite 200 | SCOTTSDALE, CA 85258
P: (480) 991-3995 | www.paceadvisor.com
TAYLOR B. PIERCE R.C.E 70097 DATE

ISSUED FOR BID

SHEET
S4.1
65 OF 99 SHEETS

JOB NO. 23364

THESE DRAWINGS ARE THE PROPERTY OF P.A.C.E. AND SHALL NOT BE REPRODUCED IN ANY MANNER NOR BE USED FOR CONSTRUCTION UNLESS STAMPED "ISSUED FOR CONSTRUCTION".

PK ASSOCIATES, LLC
6900 E. Belleview Ave. #200
Greenwood Village, Colorado 80111
Phone: (720) 799-1058
Email: cadd@pkastructural.com
Website: www.pkastructural.com

NOTES:

1. STEEL BEAM.
2. 3/8" STEEL SHEAR PLATE –USE 5/8" STEEL SHEAR PLATE WHERE "D" = 27" OR GREATER.
3. FOR SIZE, TYPE & NUMBER OF BOLTS, SEE TYPICAL BOLT SCHEDULE.
4. "D" = LESSER OF BEAM DEPTHS AS OCCURS.
5. WELD 3 SIDES TYPICAL – USE SAME CONNECTION AT STIFFENER PLATES WHEN REQUIRED.

NOTE:
AT ONE SIDED CONNECTIONS, INSTALL 3/8" STIFFENER PLATE OPPOSITE SHEAR PLATE.

212 *TYPICAL CONNECTION WIDE FLANGE BEAM TO BEAM*

NO SCALE

NO	BY	DATE	REVISIONS	DATE	APP.

Registered Professional Engineer (Civil)
CERTIFICATE NO.
70374
JAMES APPLEYARD
Date Signed 10/31/25
ARIZONA, U.S.A.

PREPARED BY: PKA
DESIGNED BY: JA
DRAWN BY: NS
CHECKED BY: JA
SCALE: AS NOTED
DATE: SEP 2025
JOB NO.: 23364

THESE DRAWINGS ARE THE PROPERTY OF P.A.C.E. AND SHALL NOT BE REPRODUCED IN ANY MANNER NOR BE USED FOR CONSTRUCTION UNLESS STAMPED "ISSUED FOR CONSTRUCTION".

TITLE
FRAMING DETAILS

JOB
TOWN OF JEROME
WASTEWATER
TREATMENT PLANT
YAVAPAI AZ

ISSUED FOR BID

PREPARED BY:
PACE
Advanced Water Engineering
9733 E. VIA de COMMERCIO, SUITE A-4, SCOTTSDALE, CA 85258
P: (408) 991-3595 | www.pacewater.com
TAYLOR B. PIERCE R.C.E 70097 DATE

SHEET
S4.2
66 OF 99 SHEETS

JOB NO. 23364

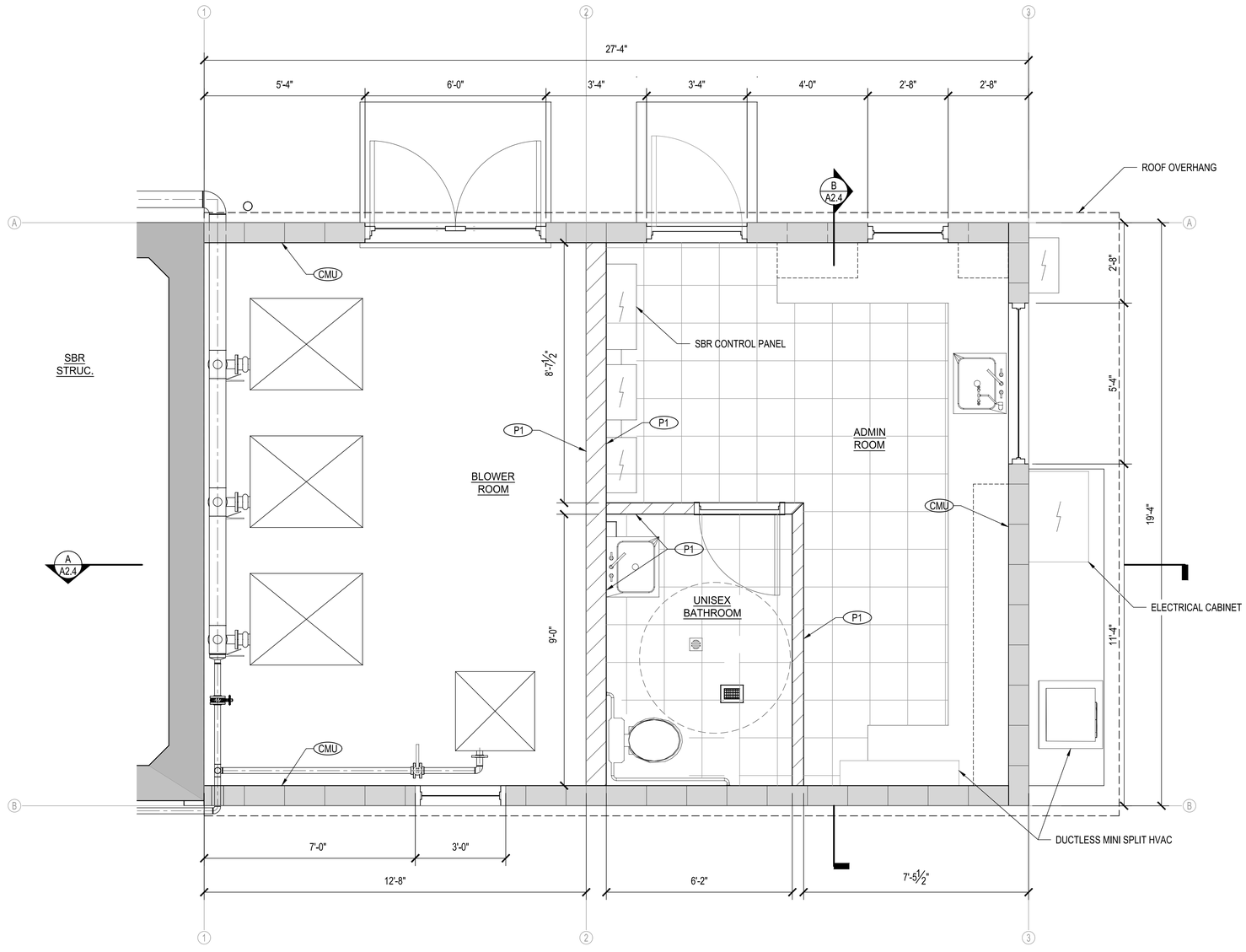

ARCH. PLAN
SCALE: 1/2" = 1'-0"

NORTH

GENERAL NOTES

1. ALL INTERIOR WALLS, EXTERIOR WALLS, AND CEILINGS SHALL BE INSULATED PER SPECIFICATION SECTION 07 2100 OF THE CONTRACT DOCUMENTS.

DOOR & WINDOW NOTES:

1. ALL EXITS SHALL OPEN FROM THE INSIDE WITHOUT THE USE OF A KEY AND/OR SPECIAL KNOWLEDGE (U.N.O.). MANUALLY OPERATED EDGE OR SURFACE MOUNTED FLUSH BOLTS AND SURFACE BOLTS ARE PROHIBITED.
2. PAINT STEEL DOORS AND FRAMES WITH ONE (1) COAT OF RUST INHIBITING PRIMER AND ONE (1) COAT OF SEMI-GLOSS ALKYD ENAMEL.
3. ALL INTERIOR DOORS TO BE SOLID CORE MASONITE DOOS IN "TIMELY" FRAMES (U.N.O.).
4. ALL DOOR HARDWARE TO BE AL SERIES "SCHLAGE" LEVER TYPE WITH FINISH PER OWNER'S DIRECTION. VERIFY KEYING WITH OWNER.
5. PROVIDE DOOR STOPS AS REQUIRED AT FLOOR AND/OR WALL.
6. ALL DOORS TO BE MASTER KEYED. VERIFY KEYING WITH OWNER.
7. ALL THRESHOLDS TO BE MAXIMUM HEIGHT OF 1/2".
8. DOOR LOCK AND LATCHES SHALL COMPLY WITH UBC SECTION 1004.3 AND ADA.
9. THE AUTHORITY HAVING JURISDICTION MAY INCREASE THE MAXIMUM EFFORT TO OPERATE FIRE DOORS IN ORDER TO ACHIEVE POSITIVE LATCHING, BUT NOT EXCEEDING THE 15 LP MAX.
10. MAXIMUM EFFORT TO OPERATE EXTERIOR DOORS IS 5 LBS.
11. HAND-ACTIVATED DOOR OPENING HARDWARE SHALL BE CENTERED BETWEEN 30" AND 44" A.F.F.
12. PROVIDE 1/4" TEMPERED GLASS AT ALL INTERIOR WINDOW LOCATIONS.
13. MAIN EXTERIOR DOORS: PROVIDE VISIBLE DURABLE SIGN ON THE EGRESS SIDE, ON OR ADJACENT TO THE DOOR, STATING: "THIS DOOR TO REMAIN UNLOCKED WHEN THE BUILDING IS OCCUPIED." THE SIGN SHALL BE IN LETTERS 1" HIGH ON A CONTRASTING BACKGROUND.

FLOOR PLAN NOTES:

1. ALL INSULATION SHALL HAVE FLAME SPREAD RATE NOT TO EXCEED 25 AND A SMOKE DENSITY NOT TO EXCEED 450 WHEN TESTED IN ACCORDANCE WITH STANDARD NO. 42-1.
2. PROVIDE 4'-0" HIGH ANGLE IRON DOOR GUARDS AT FLOOR OF EACH JAMB OF EACH OVERHEAD DOOR OPENING.
3. ALL NEW DRYWALL SHALL BE TAPED, TEXTURED, AND PAINTED WITH ONE (1) COAT VINYL ACRYLIC WALL SEALER AND TWO (2) COATS LO-GLO ACRYLIC SEMI-GLOSS ENAMEL. PROVIDE SAMPLE FOR OWNER'S APPROVAL. PROVIDE LIGHT KNOCKDOWN TEXTURE.
4. RESTROOM DRYWALL SHALL BE WATER RESISTANT TYPE X. RESTROOMS TO HAVE +4' HIGH 12"x12" GLAZED CERAMIC TILE BY "DAL TALE" OR EQUAL, FROM STANDARD COLOR SELECTION WAINSCOT. PAINT DRYWALL ABOVE WITH ONE (1) COAT PRIMER AND TWO (2) COATS SEMI-GLOSS ENAMEL PAINT. USE DUNN-EDWARDS OR FRAZEE.
5. BLOWER ROOM: PROVIDE SAWCUT CONTROL JOINTS AT 5'x5' MINIMUM FOR AREAS WITH SEALED CONCRETE FINISHED FLOOR. RESTROOM AND OPERATIONS ROOM TO RECEIVE 12"x12" VINYL COMPOSITE TILES. PROVIDE VCT AND CERAMIC TILE SAMPLES FOR OWNER'S SELECTION.
6. PROVIDE 4" CERAMIC TILE BASE TO MATCH FLOOR TILE. AT RESTROOM, PROVIDE 6" COVERED CERAMIC TILE BASE.
7. SEE PLUMBING DRAWING FOR FLOOR AREA DRAINAGE AND RESTROOM. PLUMBING DRAWINGS SHALL APPLY FOR APPLICABLE FIXTURES.

WALL FINISH LEGEND

P1 DUNN EDWARDS - FOSSIL

CMU CLEAR SEALER

INSTAL 4" HIGH RESILIENT BASE FOR ALL ROOMS.

FLOOR FINISH LEGEND

SEALED CONCRETE

12"X12" VINYL COMPOSITE TILES

NO	BY	DATE	REVISIONS	DATE	APP.

Registered Professional Engineer (Civil) CERTIFICATE NO. 70097 TAYLOR B. PIERCE Registered Professional ARIZONA, U.S.A. Expires 12/31/28

PREPARED BY: PACE
DESIGNED BY: NE
DRAWN BY: DS, WW
CHECKED BY: TP
SCALE: AS NOTED
DATE: NOV 2025
JOB NO. B614

THESE DRAWINGS ARE THE PROPERTY OF P.A.C.E. AND SHALL NOT BE REPRODUCED IN ANY MANNER NOR BE USED FOR CONSTRUCTION UNLESS STAMPED 'ISSUED FOR CONSTRUCTION'.

TITLE
BLOWER OPS ARCH PLAN

JOB
TOWN OF JEROME
WASTEWATER
TREATMENT PLANT
YAVAPAI CO. AZ

100% ISSUED FOR BID

PREPARED BY:
TAYLOR B. PIERCE R.C.E. 70097 DATE
PACE
Advanced Water Engineering
8723 E. VIA de VENTURA, SUITE A-200, SCOTTSDALE, CA 85258
P: (480) 991-3595 | www.pacewater.com

SHEET
A1.0
67 OF 99 SHEETS

JOB NO. B614

W:\B614\Engineering\B614-30sheets\B614 - A2.0 BLOWER OPS ARCH PLAN.dwg - Tab: A1.0 - by reddington on 11/21/25 at 12:26:37 PM

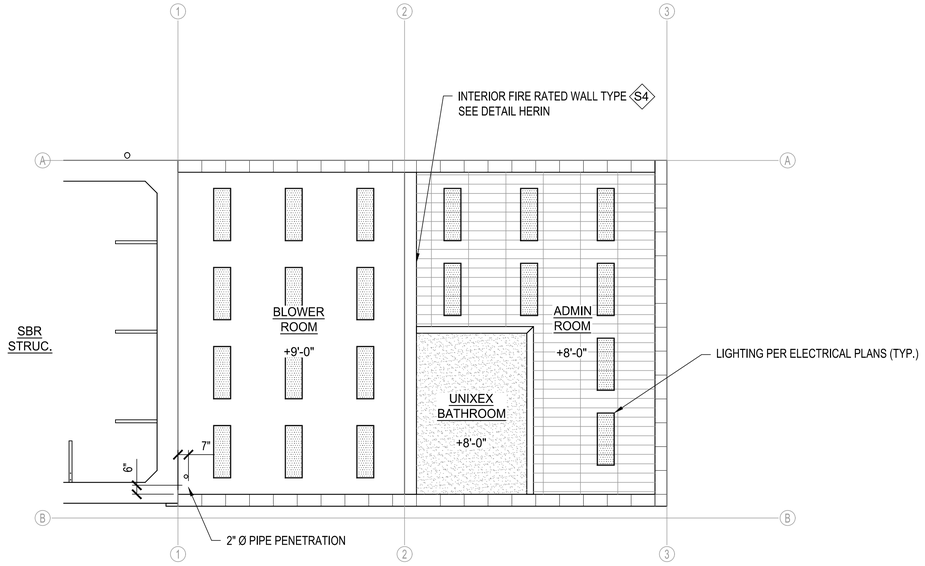

REFLECTED CEILING PLAN

SCALE: 1/4" = 1'-0"

CEILING NOTES:

1. T-BAR SUSPENSION SYSTEM TO BE PROVIDED BY ARMSTRONG OR EQUAL. SEE REFLECTED CEILING PLANS FOR LOCATIONS: 2'X4'X5/8" TILE AND CEILING HEIGHTS. CEILINGS TO BE LAID OUT CENTERED IN ROOMS IN BOTH DIRECTIONS AS SHOWN. HANG T-BAR SUSPENSION SYSTEM FROM ROOF JOISTS WITH DIAGONAL HANGERS TO PREVENT SAGGING. COLOR BY OWNER.
2. RESTROOM PER REFLECTED CEILING PLAN TO HAVE 5/8" DRYWALL CEILINGS. SUPPORT WITH 3-5/8"X22 GAUGE METAL STUDS AT 16" O.C. FOR SPANS 8' OR LESS. FOR SPANS OVER 8' USE 6"X22 GAUGE METAL STUDS AT 16".

CEILING FINISH LEGEND:

- 2'x4'x5/8" SUSPENDED T-BAR CEILING
- 5/8" DRYWALL CEILING
- EXPOSED CEILING
- 2' x 4' RECESSED FLORESCENT LIGHT FIXTURE

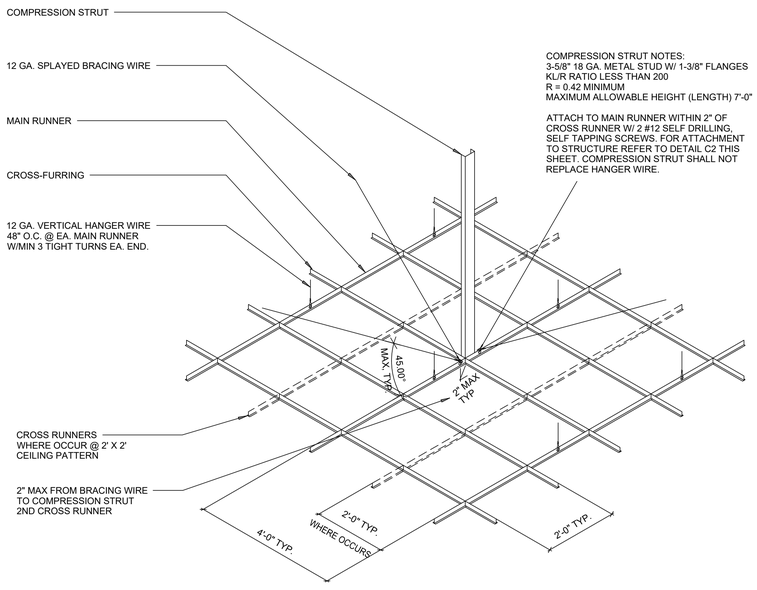

COMPRESSION STRUT NOTES:
3-5/8" 18 GA. METAL STUD W/ 1-3/8" FLANGES
KL/R RATIO LESS THAN 200
R = 0.42 MINIMUM
MAXIMUM ALLOWABLE HEIGHT (LENGTH) 7'-0"

ATTACH TO MAIN RUNNER WITHIN 2" OF CROSS RUNNER W/ 2 #12 SELF DRILLING, SELF TAPPING SCREWS. FOR ATTACHMENT TO STRUCTURE REFER TO DETAIL C2 THIS SHEET. COMPRESSION STRUT SHALL NOT REPLACE HANGER WIRE.

NOTE: PROVIDE SETS OF FOUR SPLAYED BRACING WIRES, ORIENTED 90 DEGREES FROM EACH OTHER, AND COMPRESSION STRUT AT A SPACING NOT MORE THAN 12'-0" x 12'-0" ON CENTER. PROVIDE 12 GAUGE MINIMUM SPLAYED BRACING WIRES FASTENED WITH NOT LESS THAN FOUR TIGHT TURNS IN 1-1/2 INCHES AT BOTH ENDS OF WIRE. SLOPE OF SPLAYED BRACING WIRES SHOULD NOT EXCEED 45 DEGREES FROM THE PLANE OF THE CEILING.

NOTE: PROVIDE HANGER WIRES AT A SPACING NOT MORE THAN 4'-0" X 4'-0" ON CENTER. PROVIDE 8 OR 12 GAUGE MINIMUM HANGER WIRE FASTENED WITH NOT LESS THAN THREE TIGHT TURNS IN 1-1/2 INCHES AT BOTH ENDS OF WIRE.

2'x4' SUSPENDED LAY-IN CEILING GRID

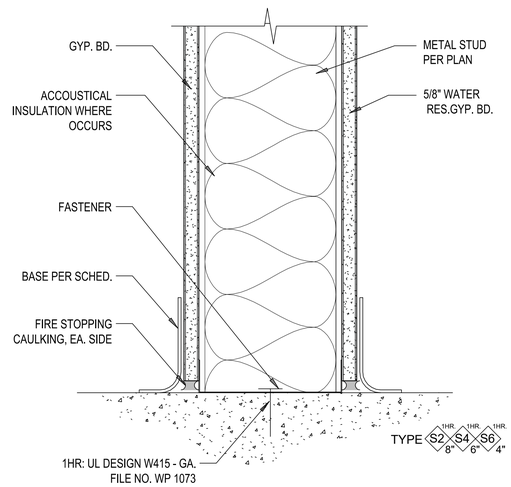

INTERIOR RATED WALL

NO	BY	DATE	REVISIONS	DATE	APP.

Registered Professional Engineer (Civil) CERTIFICATE NO. 45171 Timothy B. Pace Signed Arizona U.S.A. Expires 12/31/28

PREPARED BY: PACE
DESIGNED BY: NE
DRAWN BY: DS, WW
CHECKED BY: TP
SCALE: AS NOTED
DATE: NOV 2025
JOB NO.: B614

THESE DRAWINGS ARE THE PROPERTY OF P.A.C.E. AND SHALL NOT BE REPRODUCED IN ANY MANNER NOR BE USED FOR CONSTRUCTION UNLESS STAMPED 'ISSUED FOR CONSTRUCTION'.

TITLE
BLOWER OPS ARCH REFLECTED CEILING PLAN

JOB
TOWN OF JEROME
WASTEWATER
TREATMENT PLANT
YAVAPAI CO. AZ

100% ISSUED FOR BID

PREPARED BY:
PACE
Advanced Water Engineering
8723 E. VIA DE VENTURA, SUITE 290 | SCOTTSDALE, CA 85258
P: (480) 991-3995 | www.pacewater.com
TAYLOR B. PIERCE R.C.E. 70097 DATE

SHEET
A2.0
68 OF 99 SHEETS

JOB NO. B614

W:\B614\Engineering\B614-30\sheets\B614 - A2.0 BLOWER OPS ARCH PLAN.dwg - Tab: A2.0 - by reddington on 11/21/25 at 12:26:57 PM

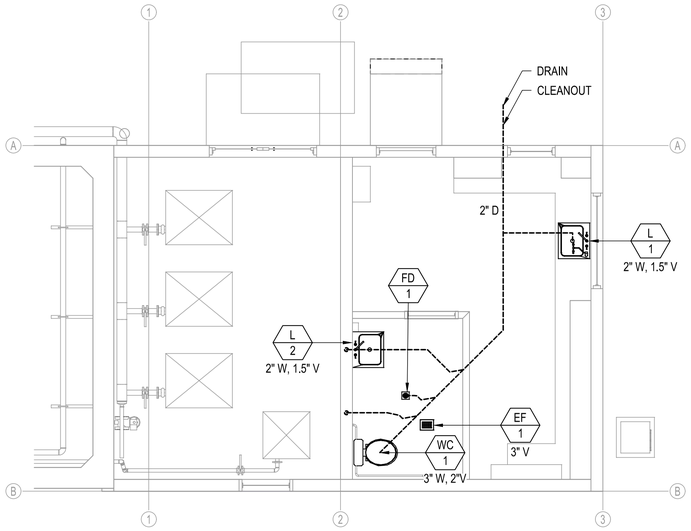

SEWER PLUMBING PLAN
SCALE: 1/4" = 1'-0"

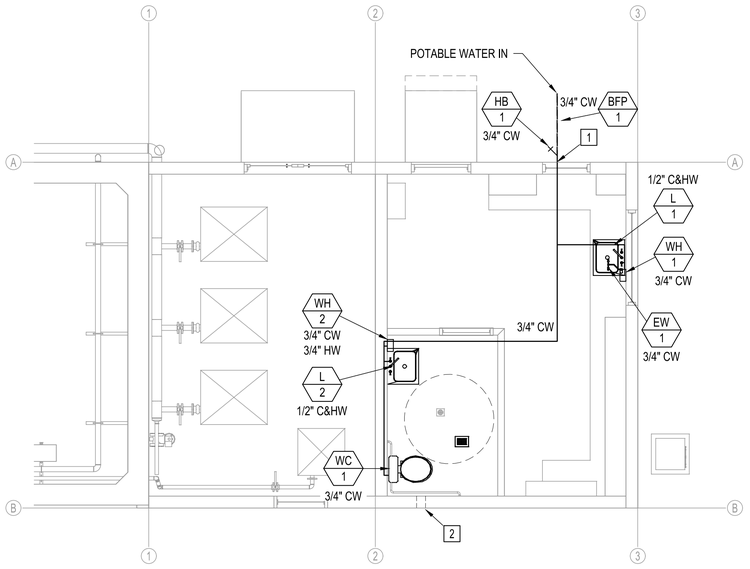

WATER PLUMBING PLAN
SCALE: 1/4" = 1'-0"

PLUMBING NOTES

1. ALL EQUIPMENT & FIXTURE COLD WATER AND HOT WATER CONNECTION SHALL BE INSTALLED W/ ISOLATION VALVE.
2. ALL PLUMBING AND HVAC LINES ARE SCHEMATIC. CONTRACTOR TO INSTALL PER BUILDING CODES.

CONSTRUCTION NOTES

1 INSTALL 2" REDUCED PRESSURE-TYPE BACKFLOW PREVENTER UNIT & ASSEMBLY COMPONENTS. BACKFLOW PREVENTER SHALL BE FEBCO, WATTS, WILKENS, OR APPROVED EQUAL.

2 INSTALL EXHAUST VENT DUCT, DISCHARGE TO WALL.

FIXTURE SCHEDULE

ITEM	FIXTURE	ROUGH-IN CONNECTIONS				DESCRIPTION
		COLD WATER	HOT WATER	WASTE	VENT	(ALL PLUMBING FIXTURES MUST BE APPROVED BY THE ENGINEER & OWNER PRIOR TO PURCHASING)
WC 1	WATER CLOSET (ADA)	1"	--	3"	2"	KOHLER OR AMERICAN STANDARD ADA HEIGHT ELONGATED WITH SLOAN AUTOMATIC FLUSH VALVE.
L 1	LAVATORY	1/2"	1/2"	2"	1-1/2"	ADA BARRIER FREE LAVATORY, COUNTER MOUNTED, WITH EXTRA HOLE FOR SOAP DISPENSER, METERED, SINGLE HANDLE SELF CLOSING FAUCET, LOOSE KEY STOPS WITH RIGID SUPPLIES, GRID DRAIN, P-TRAP.
L 2	SINK	1/2"	1/2"	2"	1-1/2"	ADA BARRIER FREE SINK, WALL MOUNTED, WITH EXTRA HOLE FOR SOAP DISPENSER, METERED, SINGLE HANDLE SELF CLOSING FAUCET, LOOSE KEY STOPS WITH RIGID SUPPLIES, GRID DRAIN, P-TRAP.
WH 1	WATER HEATER	3/4"	3/4"	--	--	RHEEM PERFORMANCE TANKLESS ELECTRIC WATER HEATER. 13 KW, 2.54 GPM
WH 2	WATER HEATER	3/4"	3/4"	--	--	RHEEM PERFORMANCE TANKLESS ELECTRIC WATER HEATER. 13 KW, 2.54 GPM
FD 1	FLOOR DRAIN	--	--	SEE PLAN FOR SIZE		ZURN NO. Z-415-NH-B-P, CAST IRON, COMPLETE WITH ROUND POLISHED NICKEL-BRONZE TOP, FLASHING COLLAR, AND P-TRAP.
HVAC 1	HVAC		--	--	--	1 TON, 12,000 BTU AIR CONDITIONER HEAT PUMP (COOLING/HEATING) SPLIT SYSTEM W/ THERMOSTAT, 16 SEER, 120V 1PH, 60 HZ. INDOOR AIR HANDLER TO BE HORIZONTALLY MOUNTED PER MFR REQUIREMENTS. AIR COMPRESSOR INSTALLED ON ROOF PER PLAN.
HB 1	HOSE BIBB	3/4"	--	--	--	HOSE BIBB MOUNTED 24" ABOVE FINISHED FLOOR.
EW 1	EYE WASH STATION	3/4"	--	--	--	EMERGENCY EYEWASH STATION, GUARDIAN G1000 FAUCET OR EQUAL.
EF 1	EF		--	--	4	100 CFM EXHAUST FAN W/ 100W LIGHT, BROAN MODEL 750 OR EQUAL.
BFP 1	BFP	--	--	--	--	3/4" BACK FLOW PREVENTER

NO	BY	DATE	REVISIONS	DATE	APP.

Registered Professional Engineer (Civil) CERTIFICATE NO. 76087 TAYLOR B. PIERCE Signed ARIZONA, U.S.A. Expires 12/31/28

PREPARED BY: PACE
DESIGNED BY: NE
DRAWN BY: DS, WW
CHECKED BY: TP
SCALE: AS NOTED
DATE: NOV 2025
JOB NO.: B614

THESE DRAWINGS ARE THE PROPERTY OF P.A.C.E. AND SHALL NOT BE REPRODUCED IN ANY MANNER NOR BE USED FOR CONSTRUCTION UNLESS STAMPED 'ISSUED FOR CONSTRUCTION'.

TITLE
BLOWER OPS ARCH SEWER & PLUMBING PLAN

JOB
TOWN OF JEROME
WASTEWATER TREATMENT PLANT
YAVAPAI CO. AZ

100% ISSUED FOR BID

PREPARED BY:
PACE
Advanced Water Engineering
8723 E. Via de Commercio, Suite 1, Scottsdale, CA 85258
P: (480) 991-3995 | www.pacewater.com
TAYLOR B. PIERCE R.C.E 70097 DATE

SHEET
A3.0
69 OF 99 SHEETS

JOB NO. B614

W:\B614\Engineering\B614-30\sheets\B614 - A3.0 BLOWER OPS ARCH PLAN.dwg - Tab: A3.0 - by neddington on 11/21/25 at 12:26:57 PM

CONSTRUCTION NOTES:

1. INSTALL ALUMINUM WINDOW SYSTEM.
2. INSTALL HOLLOW METAL DOOR AND FRAME PER PLAN.

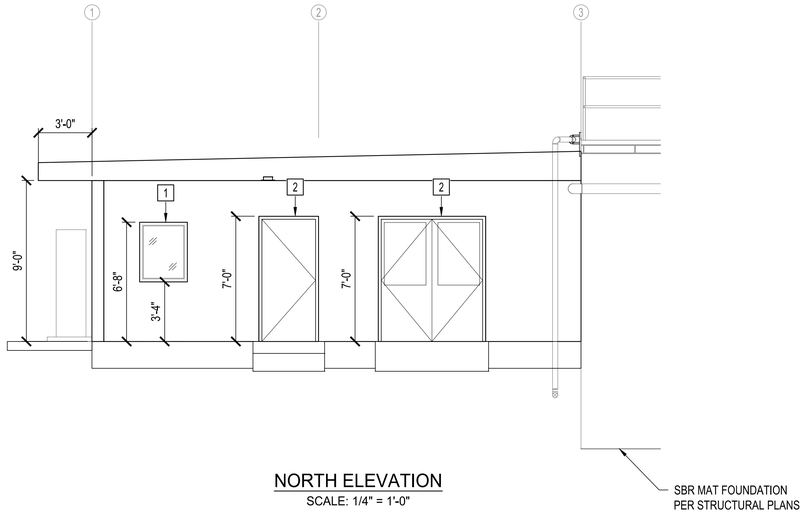

NORTH ELEVATION
SCALE: 1/4" = 1'-0"

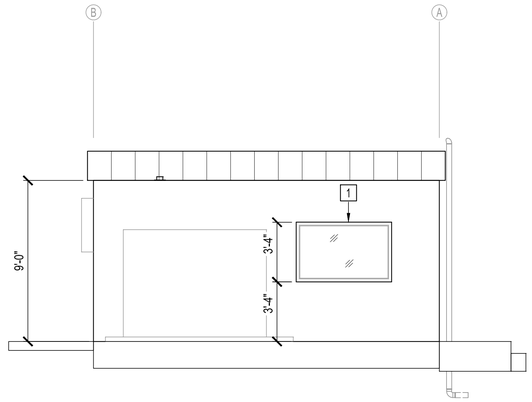

EAST ELEVATION
SCALE: 1/4" = 1'-0"

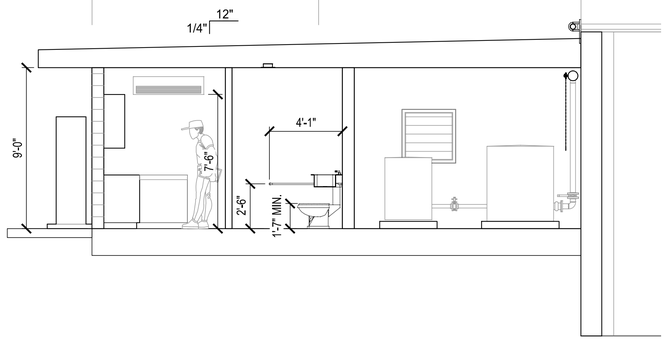

SECTION - A
SCALE: 1/4" = 1'-0"

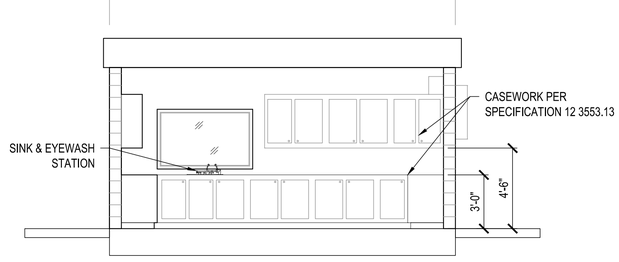

SECTION - B
SCALE: 1/4" = 1'-0"

THESE DRAWINGS ARE THE PROPERTY OF P.A.C.E. AND SHALL NOT BE REPRODUCED IN ANY MANNER NOR BE USED FOR CONSTRUCTION UNLESS STAMPED 'ISSUED FOR CONSTRUCTION'.

NO	BY	DATE	REVISIONS	DATE	APP.

Registered Professional Engineer (Civil) CERTIFICATE NO. 70097 TAYLOR B. PIERCE Signed ARIZONA, U.S.A. Expires 12/31/28

PREPARED BY: PACE
DESIGNED BY: NE
DRAWN BY: DS, WW
CHECKED BY: TP
SCALE: AS NOTED
DATE: NOV 2025
JOB NO.: B614

TITLE: **BLOWER OPS ARCH ELEVATIONS & SECTIONS**

JOB: TOWN OF JEROME WASTEWATER TREATMENT PLANT — YAVAPAI CO. AZ

100% ISSUED FOR BID

PREPARED BY:
PACE
Advanced Water Engineering
8723 E. VIA DE COMMERCIO, 1ST FLOOR | SCOTTSDALE, AZ 85258
P. (480) 991-3595 | www.pacewater.com
TAYLOR B. PIERCE R.C.E. 70097 DATE

SHEET
A4.0
70 OF 99 SHEETS

JOB NO. B614

W:\B614\Engineering\B614-3\Sheets\B614 - A2.3 BLOWER OPS ARCH SECTIONS.dwg - Tab: A4.0 - by reddington on 11/17/25 at 9:58:04 AM

TOWN OF JEROME WWTP
ELECTRICAL
JEROME, ARIZONA

GENERAL ELECTRICAL NOTES

1. ELECTRICAL WORK SHALL COMPLY WITH THE NATIONAL ELECTRIC CODE (2011), FEDERAL, STATE AND LOCAL JURISDICTION CODES.
2. ALL WORK SHALL BE DONE IN A NEAT, WORKMANLIKE, FINISHED AND SAFE MANNER, ACCORDING TO THE LATEST PUBLISHED NATIONAL ELECTRICAL CONTRACTORS ASSOCIATION STANDARDS OF INSTALLATION, UNDER COMPETENT SUPERVISION.
3. VISIT THE SITE PRIOR TO BIDDING TO BECOME FAMILIAR WITH EXISTING CONDITIONS AND ALL OTHER FACTORS WHICH MAY AFFECT THE EXECUTION OF THIS WORK. INCLUDE ALL RELATED COSTS IN THE INITIAL BID PROPOSAL.
4. CONTRACTOR IS RESPONSIBLE FOR VERIFYING LOCATIONS OF ALL EXISTING UTILITIES AND AVOIDING DAMAGE TO SAME. CONTRACTOR SHALL BE RESPONSIBLE FOR DAMAGE TO UTILITIES CAUSED AS A RESULT OF HIS WORK. CALL (602) 263–1100 FOR BLUE STAKES. IRRIGATION LINES LESS THAN 2" WILL NOT BE MARKED AND SHALL BE REPAIRED IN KIND BY THE CONTRACTOR.
5. PROPER PROTECTION OF THE CONSTRUCTION AREA FOR SAFETY SHALL BE THE RESPONSIBILITY OF THE CONTRACTOR. COVER ALL TRENCHES AT THE END OF EACH WORK DAY. BARRICADES SHALL BE INSTALLED AS DIRECTED BY THE EPCOR OR THE PROJECT INSPECTOR. THE SITE AND ALL WORK SHALL CONFORM TO OSHA REQUIREMENTS.
6. CONTRACTOR SHALL PAY FOR PERMITS AND INSPECTIONS AS MAY BE REQUIRED AND PROVIDE A CERTIFICATE OF INSPECTION TO THE EPCOR.
7. PROTECT ALL MATERIAL AND EQUIPMENT INSTALLED AGAINST DAMAGE BY OTHER TRADES, WEATHER CONDITIONS OR ANY OTHER CAUSES. EQUIPMENT FOUND DAMAGED OR IN OTHER THAN NEW CONDITION WILL BE REJECTED AS DEFECTIVE. ALL COMPONENTS SHALL BE FREE OF DUST, GRIT AND FOREIGN MATERIALS, AND LEFT AS NEW BEFORE FINAL ACCEPTANCE OF WORK.
8. LEAVE THE SITE CLEAN, REMOVE ALL DEBRIS, EMPTY CARTONS, TOOLS, CONDUIT, WIRE SCRAPS AND ALL MISCELLANEOUS SPARE EQUIPMENT AND MATERIALS USED IN THE WORK DURING CONSTRUCTION.
9. IT IS THE OBLIGATION OF THE CONTRACTOR TO ORGANIZE HIS WORK SO THAT A COMPLETE ELECTRICAL, INSTRUMENTATION, AND/OR CONTROL SYSTEM FOR THE FACILITY WILL BE PROVIDED AND SUPPORTED BY ACCURATE SHOP AND RECORD DRAWINGS, AND ALL O & M MANUALS.
10. ALL UNDERGROUND CONDUIT SHALL BE SCHEDULE 40 PVC, BURIED 24" MINIMUM BELOW FINISHED GRADE, UNLESS SPECIFICALLY NOTED OTHERWISE ON PLANS OR IN DETAILS.
11. PROVIDE EMT INDOOR AND GRS OUTDOOR FOR ABOVE GROUND CONDUIT. WHERE METALLIC CONDUITS COME IN CONTACT WITH DIRT, THEY SHALL BE HALF LAP WRAPPED WITH SCOTCH 50 TAPE TO 12" AFG. FITTINGS SHALL BE STEEL, THREADED TYPE WITH INSULATED THROATS. SECURELY ATTACH ALL SURFACE MOUNTED CONDUIT EVERY 10 FEET AND WITHIN 3 FEET OF EACH JUNCTION BOX, PER NEC ARTICLE 344.30. OUTDOOR FLEX CONDUIT SHALL BE LIQUID TITE UV RESISTANT (BLACK) FLEX CONDUIT.
12. UNDERGROUND VERTICAL AND HORIZONTAL 90 DEGREE BEND CONDUIT SHALL BE GRS HALF LAPPED WRAPPED WITH SCOTCHRAP 50 10–MIL TAPE TO 18" MIN ABOVE GRADE WITH A RADIUS OF NOT LESS THAN 18" (FACTORY BENDS ONLY SHALL BE USED)
13. UNDERGROUND CONDUITS SHALL BE A MINIMUM 1".
14. ALL FEEDERS AND BRANCH CIRCUIT WIRE SHALL BE COPPER TYPE XHHW (75 DEGREE C) FOR BELOW GRADE INSTALLATIONS (AND CONDUIT RISERS) AND THHN/THWN (75 DEGREE C) FOR ABOVE GRADE INSTALLATIONS. MINIMUM SIZE SHALL BE #12 AWG, UNLESS SPECIFICALLY NOTED OTHERWISE ON PLANS OR IN DETAILS. ALL WIRING SHALL BE IN CONDUIT.
15. A SEPARATE GREEN INSULATED EQUIPMENT GROUNDING CONDUCTOR (BOND) SHALL BE INSTALLED WITHIN EACH RACEWAY PER NEC CODE.
16. WHEN A PANEL IS SUPPLIED BY A FEEDER OR BRANCH CIRCUIT, ANY INSTALLED GROUNDED CONDUCTOR SHALL NOT BE CONNECTED TO THE EQUIPMENT GROUNDING CONDUCTOR (GEC) OR TO THE GROUNDING ELECTRODE(S) PER NEC ARTICLE 250.32(B).
17. BOND ALL ENCLOSURES PER NEC ARTICLE 250.96.
18. CONTRACTOR SHALL PLAN AND INSTALL WORK IN SUCH A MANNER AS TO CONFORM TO THE STRUCTURE, AVOID OBSTRUCTIONS, PRESERVE HEADROOM AND KEEP OPENINGS AND PASSAGEWAYS CLEAR.
19. CONTRACTOR SHALL PROVIDE ALL LABOR, MATERIAL, ETC. NECESSARY FOR A COMPLETE AND WORKABLE ELECTRICAL SYSTEM WHETHER OR NOT THESE ITEMS ARE SPECIFICALLY NOTED ON THESE DRAWINGS. INCIDENTAL ITEMS NOT INDICATED ON THE DRAWINGS, NOR MENTIONED IN SPECIFICATIONS THAT CAN BE LEGITIMATELY AND REASONABLY INFERRED TO BELONG TO THE WORK DESCRIBED OR BE NECESSARY IN GOOD PRACTICE TO PROVIDE A COMPLETE SYSTEM, SHALL BE FURNISHED AND INSTALLED AS THOUGH ITEMIZED HERE IN EVERY DETAIL.
20. CONTRACTOR IS RESPONSIBLE FOR AND SHALL PROVIDE ALL LABOR, MATERIAL, TRENCHING, CONDUIT, TRANSFORMER PAD AND OTHER REQUIRED EQUIPMENT PER UTILITY COMPANY PLANS AND SPECIFICATIONS NECESSARY FOR A COMPLETE UNDERGROUND CONDUIT SYSTEM FROM THE UTILITY POINT OF SERVICE TO THE UTILITY CO. TRANSFORMER AND FROM THE UTILITY CO. TRANSFORMER TO THE ELECTRICAL SERVICE ENTRANCE SECTION.
21. ALL TRENCHING, CONDUITS, ETC. SHALL BE ROUTED AND INSTALLED IN SUCH A MANNER THAT WILL NOT DAMAGE EXISTING FACILITIES. SHOULD DAMAGE OCCUR, IT WILL BE THE CONTRACTORS RESPONSIBILITY TO REPAIR DAMAGE TO THE SATISFACTION OF THE EPCOR OR INSPECTOR.
22. ALL CONDUIT RUNS SHOWN ON THIS PLAN ARE SCHEMATIC IN NATURE. THE CONTRACTOR SHALL MAKE SURE THAT ALL CONDUIT, ETC. FALLS WITHIN THE CONSTRUCTION AREA/RIGHT OF WAY. (THIS INCLUDES MAINTAINING ALL REQUIRED CLEARANCES.)
23. WHEN CROSSING PATHWAYS OR SIDEWALKS, CONTRACTOR SHALL BORE UNDER EXISTING CONCRETE WALKS AND SAWCUT ASPHALT WALKS. ASPHALT WALKS SHALL BE REPLACED IN KIND.
24. CONTRACTOR SHALL GUARANTEE WORK INSTALLED UNDER THE CONTRACT TO BE FREE FROM DEFECTIVE WORKMANSHIP AND MATERIALS, USUAL WEAR EXPECTED, AND SHOULD ANY SUCH DEFECTS DEVELOP WITHIN A PERIOD OF ONE YEAR ACCEPTANCE OF THE PROJECT BY THE EPCOR, THE CONTRACTOR SHALL REPAIR AND/OR REPLACE ANY DEFECTIVE ITEMS AND DAMAGE RESULTING FROM FAILURE OF THESE ITEMS, AT NO EXPENSE WHATSOEVER TO THE EPCOR.
25. CONTRACTOR SHALL IDENTIFY EQUIPMENT PANELS, DISCONNECTS, PANELS, INSTRUMENTS ETC. USING P&ID NOMENCLATURE WITH 3/32–INCH THICK LAMINATED PHENOLIC TYPE NAMEPLATES WITH 1/4–INCH MINIMUM HEIGHT LETTERS. NAMEPLATE TO BE BLACK MATTE FINISH SURFACE WITH WHITE LETTER ENGRAVING AND BE UV RESISTANT. ATTACH NAMEPLATE TO THE OUTSIDE PANEL FACE WITH TWO STAINLESS STEEL SELF–TAPPING SCREWS. NAMEPLATE SHALL READ THE EQUIPMENT NAME AND P&ID NOMENCLATURE. SEE NEC ARTICLE 230.70(B) FOR SERVICE EQUIPMENT.
26. ALL CIRCUITS SHALL BE LEGIBLY IDENTIFIED AT THE PANEL, JUNCTION BOXES AND AT ALL EQUIPMENT IN A PERMANENT MANNER (I.E. ETCHED PLATES, CONDUCTOR TAG, PERMANENT MARKER, ETC.). THE LABELING SHALL INCLUDE PANEL CIRCUIT NUMBER, "TO" AND "FROM" IDENTIFICATION, AND MARKED "SPARE" WHERE APPLICABLE.
27. CONTRACTOR SHALL TEST ELECTRICAL SYSTEM FOR SHORT CIRCUITS AND MEGGER TEST FEEDERS AND BRANCH CIRCUIT WIRING. CONTRACTOR SHALL INSURE LOW IMPEDANCE GROUND PATH SYSTEM. PROVIDE CERTIFIED TEST RESULTS FOR MEGGER TEST TO EPCOR UPON COMPLETION OF PROJECT.
28. CONTRACTOR SHALL PERFORM HIGH POTENTIAL (HIPOT) TESTING WHEN REQUIRED BY LOCAL JURISDICTION OR EPCOR.
29. CONTRACTOR SHALL PROVIDE A GROUND–FAULT COORDINATION STUDY AND PERFORM RECOMMENDED SETTINGS ON NEW OVERCURRENT PROTECTION DEVICES, PROVIDE LABELS ON EQUIPMENT INDICATING SETTINGS.
30. CONTRACTOR SHALL PROVIDE AN ARC–FLASH STUDY, PROVIDE ALL APPLICABLE LABELS ON NEW EQUIPMENT AFTER STUDY IS COMPLETED.
31. ALL CONDUIT AND J–BOXES SHOWN SHALL BE CONCEALED WHEN POSSIBLE. WHEN NOT POSSIBLE, CONDUIT AND J–BOXES MAY BE SURFACE MOUNTED WITH PERMISSION OF THE EPCOR OR EPCOR'S REPRESENTATIVE.
32. CONTRACTOR SHALL COORDINATE ALL EQUIPMENT CONNECTIONS WITH EQUIPMENT SUPPLIER PRIOR TO ROUGH–IN. PROVIDE ADDITIONAL FUSED DISCONNECT SWITCHES AND CONTROLS IF OVERCURRENT PROTECTION OR CONTROLS IS NOT INTEGRAL WITH UNITS.
33. ALL EQUIPMENT SHALL BE FUSE SIZED PER MANUFACTURES RECOMMENDATIONS AND U.L. APPROVAL.
34. ELECTRICAL DEVICES, DISCONNECT SWITCHES, ETC., SHALL BE SUPPORTED INDEPENDENT OF AND ISOLATED FROM EQUIPMENT VIBRATIONS.
35. FULL LOAD AMPS (FLA) SIZES, AS NOTED IN THESE DRAWINGS, ARE BASED ON SPECIFIED EQUIPMENT DATA. CONTRACTOR SHALL VERIFY NAMEPLATE FLA OF EQUIPMENT SUPPLIED AND COORDINATE ACCORDINGLY PER EQUIPMENT SUPPLIERS RECOMMENDATIONS.
36. ALL OUTDOOR ELECTRICAL EQUIPMENT SHALL BE NEMA–3R OR NEMA–4 ENCLOSURES.
37. CONDUITS OR RACEWAYS ROUTED FROM INDOORS TO OUTDOORS OR AS DESCRIBED IN NEC 300.7(A), SHALL BE SEALED WITH A PLIABLE SEALING COMPOUND AT A CONDUIT BODY OR AT A JUNCTION BOX BEFORE THE CONDUIT ENTERS THE COLDER ENVIRONMENT.
38. CONDUITS OR RACEWAYS INSTALLED IN AREAS WHERE ELEVATION CHANGES MAY CAUSE WATER OR MOISTURE TO ENTER THE ELECTRICAL EQUIPMENT THROUGH THE CONDUIT SHALL BE SEALED WITH A HERMETIC CONDUIT SEAL AT BOTH ENDS OF THE CONDUIT OR RACEWAY.
39. MATERIALS SHALL BE NEW AND OF THE BEST QUALITY WITH MANUFACTURER'S NAME PRINTED THEREON. MATERIALS SHALL BE MANUFACTURED IN ACCORDANCE WITH NEMA, ANSI, UNDERWRITER'S LABORATORY OR OTHER APPLICABLE STANDARDS AND RATED FOR HEAVY DUTY SERVICE.
40. ALL WIRING DEVICES SHALL BE SPECIFICATION GRADE. ALL 15 AND 20 AMP, 125 AND 250 VOLT, NONLOCKING RECEPTACLES INSTALLED OUTDOORS SHALL BE LISTED WEATHER–RESISTANT TYPE. ALL WEATHERPROOF WHILE IN–USE RECEPTACLE COVERS SHALL BE METAL.
41. SELECTION OF MATERIALS SHALL BE IN STRICT ACCORDANCE WITH THE DRAWINGS AND/OR SPECIFICATIONS. THE USE OF MANUFACTURER'S NAME, MODEL, AND NUMBER IS INTENDED TO ESTABLISH STYLE, QUALITY, APPEARANCE, USEFULNESS AND BID PRICE. CONTRACTOR SHALL SUBMIT TO THE EPCOR OR EPCOR'S REPRESENTATIVE FOR REVIEW AND APPROVAL (PRIOR TO ORDERING MATERIALS) COPIES OF EQUIPMENT SHOP DRAWINGS AS FOLLOWS: 1) LIGHT FIXTURES, 2) PUMP CONTROL PANEL 3) RTU/PLC 4) SERVICE ENTRANCE SECTION, 5) ELECTRICAL EQUIPMENT, 6) DISCONNECT SWITCHES, 7) TIME CLOCKS AND OTHER CONTROLS, 8) LIGHTING CONTACTORS AND 9) PULL BOXES. AT THE TIME OF EACH SUBMITTAL, THE CONTRACTOR SHALL DEFINE AND DELINEATE IN WRITING ANY DEVIATIONS FROM THE CONTRACT DOCUMENTS. THE REVIEW WILL BE ONLY FOR CONFORMANCE WITH THE DESIGN CONCEPT OF THE WORK AND FOR COMPLIANCE WITH THE INFORMATION CONTAINED IN THE CONTRACT DOCUMENTS. THE REVIEW OF A SPECIFIED ITEM, AS SUCH, WILL NOT INDICATE REVIEW OF THE ASSEMBLY IN WHICH THE ITEM FUNCTIONS. REVIEW BY THE EPCOR OR EPCOR'S REPRESENTATIVE WILL NOT RELIEVE THE CONTRACTOR FROM RESPONSIBILITY FOR ANY ERRORS OR OMISSIONS IN THE SUBMITTALS NOR FROM HIS RESPONSIBILITY FOR COMPLYING WITH THE CONTRACT DOCUMENTS.
42. THE SUBMITTALS SHALL BE NEATLY GROUPED AND ORGANIZED. PERTINENT INFORMATION SHALL BE HIGHLIGHTED, AND THE SPECIFIC PRODUCT SHALL BE IDENTIFIED. ALL SUBMITTALS SHALL BE COMPLETE, AND PRESENTED IN ONE PACKAGE. THE SUBMITTAL SHALL INCLUDE A COMPLETE LIST OF THE EQUIPMENT AND MATERIALS, INCLUDING THE MANUFACTURER'S NAME, PRODUCT SPECIFICATION, DESCRIPTIVE DATA, TECHNICAL LITERATURE, PERFORMANCE CHARTS, CATALOG CUTS, INSTALLATION INSTRUCTIONS, AND SPARE PART RECOMMENDATIONS FOR EACH DIFFERENT ITEM OF THE EQUIPMENT SPECIFIED.
43. ELECTRICAL CONTRACTOR SHALL HAVE A MINIMUM OF 5 YEARS EXPERIENCE WORKING IN THE WATER/WASTEWATER INDUSTRY AND PROVIDE REFERENCES.

ENGINEER OF RECORD

PACE ADVANCED WATER ENGINEERING
8723 E. VIA DE COMMERCIO, #A–204
SCOTTSDALE, AZ 85258
PHONE: (480) 991–3595
CONTACT: TAYLOR PIERCE
CONTACT: TPIERCE@PACEWATER.COM

ELECTRICAL ENGINEER

WRIGHT ENGINEERING CORPORATION
165 EAST CHILTON DRIVE
CHANDLER, AZ 85225
PHONE: (480) 497–5829
CONTACT: JACOB BIELEFELDT
EMAIL: JBIELEFELDT@WRIGHTENGINEERING.US

PROJECT ADDRESS

TOWN OF JEROME WASTEWATER TREATMENT PLANT
SEWER PLANT ROAD
JEROME, AZ 86331

PRINCIPAL OWNER

TOWN OF JEROME
600 CLARK STREET, P.O. BOX 335
JEROME, AZ 86331

SHEET INDEX

SHEET E1.1 ELECTRICAL COVER SHEET
SHEET E1.2 ELECTRICAL NOTES + LEGEND
SHEET E2.1 ELECTRICAL SINGLE LINE DIAGRAM I
SHEET E2.2 ELECTRICAL SINGLE LINE DIAGRAM II
SHEET E2.3 ELECTRICAL LOAD CALCULATIONS
SHEET E2.4 ELECTRICAL CONDUIT + WIRE TABLES I
SHEET E2.5 ELECTRICAL CONDUIT + WIRE TABLES II
SHEET E3.1 ELECTRICAL PROPOSED SITE PLAN
SHEET E3.2 ELECTRICAL SBR PLAN
SHEET E3.3 ELECTRICAL DEWATERING PAD
SHEET E3.4 ELECTRICAL BLOWER OPS
SHEET E3.5 ELECTRICAL DRYING BED LIFT STATION
SHEET E3.6 ELECTRICAL OVERFLOW BASIN
SHEET E4.1 ELECTRICAL DETAILS I
SHEET E4.2 ELECTRICAL DETAILS II
SHEET E4.3 ELECTRICAL DETAILS III
SHEET E4.4 ELECTRICAL DETAILS IV
SHEET E4.5 ELECTRICAL DETAILS V
SHEET E4.6 ELECTRICAL DETAILS VI
SHEET E5.1 ELECTRICAL SCHEMATICS I
SHEET E5.2 ELECTRICAL SCHEMATICS II
SHEET E5.3 ELECTRICAL SCHEMATICS III

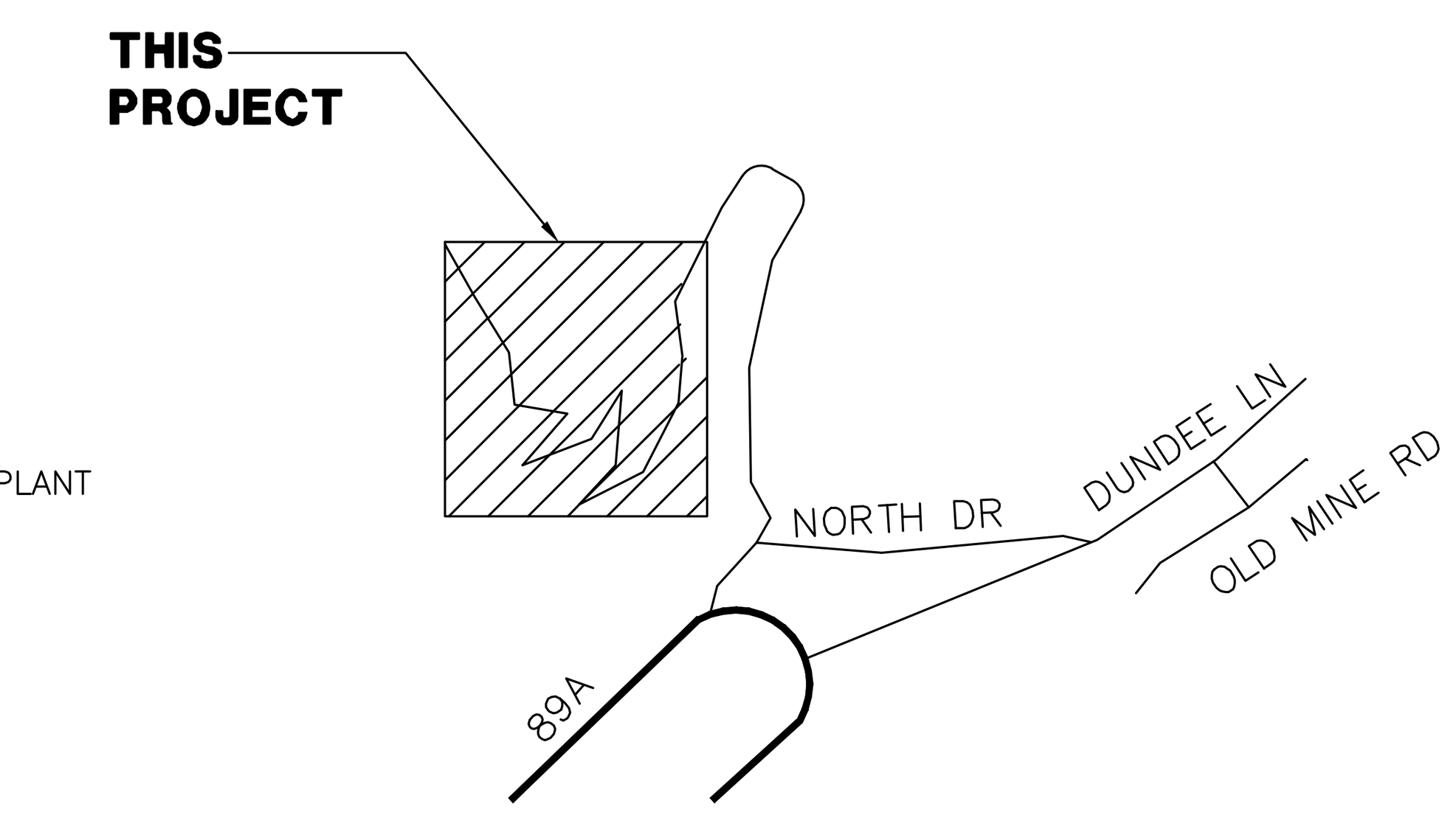

VICINITY MAP
NO SCALE

NORTH

LIGHT FIXTURE SCHEDULE

SYMBOL	LETTER ID	MANUFACTURER	CATALOG NUMBER	FINISH COLOR	VOLTS	LAMP	LUMENS (MIN)	CCT	MOUNTING HEIGHT	TYPE	DETAIL
	A	LITHONIA LIGHTING	DSX1–LED–P2–30K–80CRI–T5W–MVOLT–PER–SPD20KV–DF–HA–CCE–DBLXD WITH PHOTOCELL, CONTRACTOR SHALL INSTALL IN LINE WITH LIGHT SWITCH TO OVERRIDE.	BLACK	240	68W LED	9,940	3000K	15'–0"	AREA LIGHT	POLE MOUNTED, SEE DETAIL D SHEET SE4.1
	B	LITHONIA LIGHTING	2VTL2–48L–ADP–LP940–BDP	WHITE	120	38.3W LED	4,116	4000K	*	BUILDING CEILING TROFFER 2X2	*CEILING MOUNTED, COORDINATE SURFACE TYPE BY OTHERS.
	C	LITHONIA LIGHTING	WDGE2 LED–P4 30K–80CRI–TFTM–MVOLT–PE–CCE–PIR–DBLXD– (2 OVER DOOR SHALL HAVE BATTERY BACK UP E10WH), CONTRACTOR SHALL INSTALL IN LINE WITH LIGHT SWITCH TO OVERRIDE.	BLACK	120	47W LED	4,002	3000K	*	BUILDING WALLPACK LIGHT	*WALL MOUNTED, 1 FOOT ABOVE DOOR
	D	LITHONIA LIGHTING	FEX–L24–9000LM–FGFL–WD–MVOLT–30K–90CRI–SPD10KV–IP67–DNAXD CR	BLACK	120	62.5W LED	6,424	3000K	*	CANOPY LIGHT	*CEILING
	E	LITHONIA LIGHTING	AFF–OEL–DWHGXD–UVOLT–LTP–SDRT–FCT–	BLACK	120	2.5W LED	N/A	N/A	*	EMERGENCY EXIT LIGHT	*WALL MOUNTED ABOVE DOOR.
	F	WAC LIGHTING	WS–180137–30K–90–2130	MATCH WATER FAUCET FIXTURE FINISH	120	28W LED	2,130	3000K	*	BUILDING RESTROOM LIGHT	*WALL MOUNTED ABOVE MIRROR.
	G	HOLOPHANE	HPFS–P3–55PG–MVOLT–30K–YMS–20KV–CNP123FT–UBV–DBLXD	BLACK	240	83W LED	12,627	3000K	*	SBR CATWALK FLOODLIGHT, CLASS 1 DIVISION 2	*SEE DETAIL.

NOTE: CONTRACTOR SHALL VERIFY ARCHITECTURE ELEMENTS FOR MOUNTING AND INSTALLATION PRIOR TO ORDERING. CONTRACTOR MAY SUBMIT ALTERNATIVES FOR ENGINEER APPROVED EQUAL.

WRIGHT engineering corporation
ELECTRICAL ENGINEERING AND DESIGN
165 EAST CHILTON DRIVE
CHANDLER, ARIZONA 85225
PHONE: 480.497.5829
FAX: 480.497.5807
www.wrightengineering.us
Wright Project # 23319

CALL TWO WORKING DAYS BEFORE YOU DIG
602-263-1100
1-800-STAKE-IT
(OUTSIDE MARICOPA COUNTY)

ISSUED FOR BID

NO	BY	DATE	REVISIONS	DATE	APP.

Registered Professional Engineer (Electrical) Certificate No. 73954 JACOB BIELEFELDT Date Signed 11-24-2025 Expires 9-30-27

PREPARED BY: WRIGHT ENGINEERING
DESIGNED BY: JHB
DRAWN BY: XAG
CHECKED BY: JHB SCALE: AS NOTED
DATE NOV 2025
JOB NO. B614

TITLE: ELECTRICAL COVER SHEET

JOB: TOWN OF JEROME WASTEWATER TREATMENT PLANT
YAVAPAI CO. AZ

PREPARED BY: PACE Advanced Water Engineering
8723 E. VIA de COMMERICO, SUITE A-204 | SCOTTSDALE, CA 85258
P: (408) 991-3595 | www.pacewater.com

SHEET E1.1
71 OF 99 SHEETS
JOB NO. B614

THESE DRAWINGS ARE THE PROPERTY OF P.A.C.E. AND SHALL NOT BE REPRODUCED IN ANY MANNER NOR BE USED FOR CONSTRUCTION UNLESS STAMPED "ISSUED FOR CONSTRUCTION".

Item I.
H:\2023\23319-Jerome WWTP\23319-E.dwg - Tab: E1.1 - by jacobb on 11/24/25 at 6:56:46 PM

ELECTRICAL SYMBOLS

SINGLE LINE DIAGRAMS

A	AMMETER
V	VOLTMETER
M	METER
KWH	KILOWATT HOUR METER
AS	AMMETER SWITCH
VS	VOLTMETER SWITCH
GFP	GROUND FAULT PROTECTION
	POWER TRANSFORMER SEE NOTE 1.
A-24	CIRCUIT BREAKER, 3 POLE UNLESS OTHERWISE INDICATED
	DISCONNECT SWITCH, 3 POLE UNLESS OTHERWISE INDICATED
	OIL FUSE CUTOUTS
	FUSE SEE NOTE 3.
	TRANSFER SWITCH, AUTOMATIC
RV SIZE 1	MAGNETIC MOTOR STARTER."1" INDICATES SIZE 1. RV INDICATES REDUCED VOLTAGE. 2S INDICATES 2 SPEED. R INDICATES REVERSING.
	MAGNETIC CONTACTOR
12	CONDUIT NUMBER 12. SEE CONDUIT AND WIRING SCHEDULE FOR SIZES AND QUANTITIES OF CONDUIT AND WIRES.
GND	GROUND
K	KIRK KEY INTERLOCKING OF EQUIPMENT
2 HP	EQUIPMENT FURNISHED, INSTALLED AND CONNECTED UNDER ANOTHER SECTION OF THE CONTRACT.
PFR	PHASE FAILURE RELAY
SA	SURGE ARRESTER
#	EXISTING MOTOR (HP SHOWN)
#	NEW MOTOR (ESTIMATED HP SHOWN)
#	FUTURE MOTOR (ESTIMATED HP SHOWN)
1	MANHOLE
	EYS SEAL

NOTES: (ELECTRICAL SYMBOLS)

1. POWER TRANSFORMERS SHALL BE DRY TYPE 480-208Y/120 VOLTS, 3 PHASE 4 WIRE UNLESS OTHERWISE INDICATED.

2. CONTROL TRANSFORMER SHALL BE DRY TYPE 480-120 VOLTS 1 PHASE UNLESS OTHERWISE INDICATED. SEE CONTROL WIRING DIAGRAMS FOR USE OF 120 VOLT CONTROL CIRCUITS CONTROL TRANSFORMERS SHALL BE SIZED TO HANDLE THE LOADS OF ALL RELAYS, PILOT LIGHTS, ETC. CONNECTED THERE TO PLUS 50 VA EXTRA CAPAOWNER.

3. LOCATED IN OR ON MOTOR CONTROL CENTER UNLESS OTHERWISE INDICATED.

CONTROL WIRING DIAGRAMS

NORMALLY OPEN / NORMALLY CLOSED / DEVICE

- CONTACT
- LIMIT SWITCH
- LIMIT SWITCH HELD CLOSED
- LIMIT SWITCH HELD OPEN
- PRESSURE OR VACUUM SWITCH
- LIQUID LEVEL SWITCH
- TEMPERATURE ACTUATED SWITCH
- FLOW SWITCH (AIR, WATER, ETC.)
- PUSH BUTTON SINGLE CIRCUIT MOMENTARY CONTACT. SEE NOTE 3.
- PUSH BUTTON SINGLE CIRCUIT LOCK-OUT(LOCATED AT MOTOR UNLESS OTHERWISE NOTED)
- TIMED CONTACT- CONTACT ACTION RELAY ON ENERGIZATION.
- TIMED CONTACT- CONTACT ACTION RELAY ON DE-ENERGIZATION.
- ON-OFF SWITCH. SEE NOTE 3.
- ESB — EMERGENCY STOP PUSH BUTTON (MAINTAINED CONTACT)
- STOP / START — STOP -START PUSH-BUTTON STATION (MAINTAINED CONTACTS). SEE NOTE 3.
- H / O / A — HAND-OFF-AUTO SELECTOR SWITCH SEE NOTE 3. (THREE POSITION).
- TWO POSITION SELECTOR SWITCH SEE NOTE 3.
- R — PILOT LIGHT, Y=YELLOW, R=RED, A=AMBER, SEE NOTE 3. B=BLUE, W=WHITE, G=GREEN.
- BELL
- HORN OR SIREN
- CR — CONTROL RELAY SEE NOTE 3.
- M — STARTER COIL. SEE NOTE 3.
- TDR — TIME DELAY RELAY. (0-30 SECONDS UNLESS OTHERWISE NOTED). SEE NOTE 3.
- OL'S — MOTOR STARTER OVERLOAD RELAY CONTACTS
- CONTROL TRANSFORMER. SEE NOTES 2
- MANUAL MOTOR STARTER
- SOLENOID OPERATED CONTROL VALVE
- 1 — 120 VOLT, 1 PHASE, MOTOR (UNLESS OTHERWISE NOTED)
- RTM — RUNNING TIME METER. SEE NOTE 3. (ELAPSED TIME METER)
- SPACE HEATERS. (LOCATED AT MOTOR UNLESS OTHERWISE NOTED).
- TERMINALS IN MOTOR CONTROL CENTER/MCP; CONTACT OR DEVICE REMOTE FROM MOTOR CONTROL CENTER/MCP
- TERMINALS IN MOTOR CONTROL CENTER/MCP; CONTACT IN MOTOR CONTROL CENTER FOR CONNECTION TO REMOTE DEVICE/MCP
- DEVICE SIGNAL OUTPUT
- DEVICE SIGNAL INPUT

PLANS

- CONDUIT RUN CONCEALED UNDER SLAB OR BELOW GRADE. (CONCEALED IN SLAB WHERE SO NOTED OR WHERE ALLOWED PER SPECIFICATIONS).
- CONDUIT RUN EXPOSED UNLESS OTHERWISE NOTED
- EXISTING CONDUIT RUN
- HASH MARKS INDICATE QUANTITY OF #12 WIRES IN CONDUIT (PLUS 1#12 GROUND WIRE) EXCEPT NO HASH MARKS=3/4", 2#12 (PLUS 1#12 GROUND WIRE) UNLESS OTHERWISE NOTED. 3/4", 3#12; 1", 6#12; 3/4", 4#12; 1", 7#12; 3/4", 5#12; 1", 8#12
- L(1,3) — HOMERUN TO PANEL L, CIRCUITS 1 AND 3
- GROUND WIRE
- CONDUIT UP (OUT TOP OF EQUIPMENT)
- CONDUIT DOWN (OUT BOTTOM OF EQUIPMENT)
- CONDUIT STUBBED OUT AND CAPPED
- LIGHTING FIXTURE MOUNTED ON POLE OR POST OR ABOVE PLATFORM
- CEILING MOUNTED LIGHTING FIXTURE
- BRACKET MOUNTED LIGHTING FIXTURE
- FLOODLIGHT
- FLUORESCENT LIGHTING FIXTURE
- POLE MOUNTED LIGHT FIXTURE
- EXIT LIGHT
- RECESSED LIGHTING FIXTURE
- LIGHTING FIXTURES CONNECTED TO EMERGENCY CIRCUITS
- A 1/100 — LIGHTING FIXTURE TYPE A, 100 WATTS, WITH 1 LAMP. SEE LIGHTING FIXTURE SCHEDULE
- \$ — SINGLE POLE, SINGLE THROW TOGGLE SWITCH
- $\$_2$ — DOUBLE POLE, SINGLE THROW TOGGLE SWITCH
- $\$_3$ — THREE-WAY TOGGLE SWITCH
- $\$_4$ — FOUR-WAY TOGGLE SWITCH
- $\$_M$ — MANUAL MOTOR STARTER
- (switches above: AT +48" OR AS NOTED)
- $\$_a$ — OUTLETS SHOWN WITH SUBSCRIPT "a" ADJACENT TO THEM SHALL BE CONTROLLED BY S a
- DUPLEX CONVENIENCE RECEPTACLE AT +12" OR AS NOTED
- SINGLE CONVENIENCE RECEPTACLE AT +12" OR AS NOTED
- SPECIAL PURPOSE RECEPTACLE AT +12" OR AS NOTED, RATING AS INDICATED
- JUNCTION BOX, SIZE AS REQUIRED BY CODE
- THERMOSTAT OUTLET AT +54"
- CLOCK OUTLET AT +7'-6" OR AS NOTED
- TELEPHONE OUTLET AT +12" OR AS NOTED
- TELEPHONE FLOOR OUTLET
- HORN
- P — CONTROL DEVICE: P = PRESSURE SWITCH; ZS = LIMIT SWITCH; L = LEVEL SWITCH; V = CONTROL VALVE
- CONTROL STATION: PUSH-BUTTON STATION OR SELECTOR SWITCH. SEE CONTROL WIRING DIAGRAMS FOR REQUIREMENTS.
- M — EXISTING MOTOR
- M — NEW MOTOR
- M — FUTURE MOTOR
- GROUND WELL
- GROUND ROD
- DISCONNECT SWITCH. SEE SINGLE LINE DIAGRAM FOR SIZE.
- LIGHTING PANEL. SURFACE MOUNTED.
- SWITCHBOARD, DISTRIBUTION PANEL OR MOTOR CONTROL CENTER
- 12 — CONDUIT NUMBER 12. SEE CONDUIT AND WIRING SCHEDULE FOR SIZES AND QUANTITIES OF CONDUIT AND WIRES.
- +12" — INDICATES HEIGHT FROM FINISHED FLOOR OR GRADE TO CENTERLINE OF DEVICE.
- (1) — INDICATES TO REFER TO NOTE (1) ON DRAWING
- W.P. — WEATHERPROOF. PROVIDE GASKETS AS REQUIRED
- C.O. — CONDUIT ONLY
- FE-184 — INSTRUMENTATION DEVICE. SEE PROCESS AND INSTRUMENTATION DRAWINGS FOR DESCRIPTIONS.
- PULL BOX (SIZE AS REQUIRED)
- OUTPUT TERMINAL
- INPUT TERMINAL

CONSTRUCTION NOTES

(1) REMOVE ALL EXISTING CUSTOMER OWNED OVERHEAD ELECTRICAL AND POWER POLE AND DISPOSE OF PROPERLY. COORDINATE WITH OWNER FOR SCHEDULING.

(2) REMOVE EXISTING SES AND PANEL AND DISPOSE OF PROPERLY. COORDINATE DISCONNECTION OF THE METER AND SECONDARY CONDUCTORS WITH APS

(3) DE-ENERGIZE EXISTING LAB BUILDING UPON COMPLETION OF CONSTRUCTION OF THE NEW LAB. REMOVE ALL EXISTING CONDUCTORS AND ELECTRICAL EQUIPMENT AND DISPOSE OF PROPERLY. COORDINATE ALL WORK WITH OWNER AND POWER COMPANY PRIOR TO DE-ENERGIZATION.

(4) COORDINATE WITH APS TO REPLACE THE EXISTING POLE MOUNTED SINGLE PHASE TRANSFORMER. APS TO INSTALL THREE PHASE TRANSFORMERS. CONTRACTOR SHALL VERIFY LOCATION OF NEW TRANSFORMER WITH APS. APS PLANS WILL DETERMINE EXACT LOCATION AND TAKE PRECEDENCE OVER THESE DRAWINGS. COORDINATE ALL WORK WITH APS.

(5) APS SERVICE LINE. TRENCH AND INSTALL CONDUIT PER APS SPECIFICATIONS. POWER COMPANY PLANS WILL DETERMINE EXACT LOCATION OF CONDUIT AND TAKE PRECEDENCE OVER THESE DRAWINGS.

(6) SES, 400 AMP, 277/480V, 3Ø, 4W, SEE DETAIL 1 ON E4.1.

(7) MINI-POWER ZONE AND PANELBOARD. SEE DETAIL 1 ON E4.1.

(8) ATS 400A 277/480V, 3Ø, 4W, SEE DETAIL 2 ON SHEET E4.1.

(9) GENERATOR 125KW, 277/480V, 3Ø, 4W, SEE DETAIL 1 ON E4.3.

(10) TRANSFORMER 50KVA 480V - 120/240V 1Ø, SEE DETAIL 2 ON SHEET E4.1.

(11) PANELBOARD, 120/240V, 1Ø, 3W, SEE DETAIL 2 ON E4.1.

(12) DISTRIBUTION PANEL DSP-1 400A 277/480V, 3Ø, 4W, SEE DETAIL 2 ON SHEET E4.1.

(13) ELECTRICAL CONTRACTOR SHALL INSTALL POWER FEED TO MINI SPLIT AIR CONDITIONER AND HEAT PUMP & MAKE ALL 240V CONNECTIONS.

(14) TANKLESS WATER HEATER & DISCONENCT. ELECTRICAL CONTRACTOR SHALL MAKE ALL POWER AND CONTROL CONNECTIONS PER THESE PLANS AND SPECIFICATIONS AND THE MANUFACTURERS REQUIREMENTS.

(15) GROUNDING ELECTRODE CONDUCTORS, GROUND ROD, AND INSPECTION WELL FOR ONLY THE FIRST GROUND ROD, PER SINGLE LINE DIAGRAMS AND DETAILS ON SHEET E4.6.

(16) LIGHTNING PROTECTION SYSTEM, PER NFPA AND DETAIL 6 ON SHEET E4.6

(17) CLASSIFIED SEAL OFF LISTED FOR CLASS 1 DIV 1. LOCATE WITHIN 10 FEET OF CLASSIFIED AREA BOUNDARY. PVC COATED RMS EYS TYPE OR EQUIVALENT. SEAL SHALL HAVE SEALING COMPOUND CHICO, OR EQUAL.

(20) 20A HEADWORKS CONTROL PANEL, BY VENDOR CLASS 1 DIVISION 2 LISTED. ELECTRICAL CONTRACTOR SHALL MAKE ALL POWER AND CONTROL CONNECTIONS PER THESE PLANS AND SPECIFICATIONS AND THE MANUFACTURERS REQUIREMENTS. SEE DETAIL 1 ON SHEET E4.4.

(21) INFLUENT COARSE SCREEN MOTOR. ELECTRICAL CONTRACTOR SHALL MAKE ALL POWER AND CONTROL CONNECTIONS PER THESE PLANS AND SPECIFICATIONS AND THE MANUFACTURERS REQUIREMENTS.

(22) INFLUENT CONVEYOR MOTOR. ELECTRICAL CONTRACTOR SHALL MAKE ALL POWER AND CONTROL CONNECTIONS PER THESE PLANS AND SPECIFICATIONS AND THE MANUFACTURERS REQUIREMENTS.

(23) POTABLE SOLENOID VALVE AT HEADWORKS. ELECTRICAL CONTRACTOR SHALL MAKE ALL POWER AND CONTROL CONNECTIONS PER THESE PLANS AND SPECIFICATIONS AND THE MANUFACTURERS REQUIREMENTS.

(24) ULTRASONIC LEVEL TRANSDUCER. ELECTRICAL CONTRACTOR SHALL MAKE ALL POWER AND CONTROL CONNECTIONS PER THESE PLANS AND SPECIFICATIONS AND THE MANUFACTURERS REQUIREMENTS.

(30) SBR PANEL BY VENDOR, ELECTRICAL CONTRACTOR SHALL MAKE ALL POWER AND CONTROL CONNECTIONS PER THESE PLANS AND SPECIFICATIONS AND THE MANUFACTURERS REQUIREMENTS.

(31) SBR INFLUENT VALVE. ELECTRICAL CONTRACTOR SHALL MAKE ALL POWER AND CONTROL CONNECTIONS PER THESE PLANS AND SPECIFICATIONS AND THE MANUFACTURERS REQUIREMENTS.

(32) SBR SUBMERSIBLE MIXER. ELECTRICAL CONTRACTOR SHALL MAKE ALL POWER AND CONTROL CONNECTIONS PER THESE PLANS AND SPECIFICATIONS AND THE MANUFACTURERS REQUIREMENTS.

(33) WAS TRANSFER PUMP. ELECTRICAL CONTRACTOR SHALL MAKE ALL POWER AND CONTROL CONNECTIONS PER THESE PLANS AND SPECIFICATIONS AND THE MANUFACTURERS REQUIREMENTS.

(34) DECANT MOTOR. ELECTRICAL CONTRACTOR SHALL MAKE ALL POWER AND CONTROL CONNECTIONS PER THESE PLANS AND SPECIFICATIONS AND THE MANUFACTURERS REQUIREMENTS.

(35) SBR DECANT VALVE. ELECTRICAL CONTRACTOR SHALL MAKE ALL POWER AND CONTROL CONNECTIONS PER THESE PLANS AND SPECIFICATIONS AND THE MANUFACTURERS REQUIREMENTS.

(36) DO TRANSMITTER AND ANALYZER. ELECTRICAL CONTRACTOR SHALL MAKE ALL POWER AND CONTROL CONNECTIONS PER THESE PLANS AND SPECIFICATIONS AND THE MANUFACTURERS REQUIREMENTS.

(37) SUBMERSIBLE PRESSURE TRANSDUCER. ELECTRICAL CONTRACTOR SHALL MAKE ALL POWER AND CONTROL CONNECTIONS PER THESE PLANS AND SPECIFICATIONS AND THE MANUFACTURERS REQUIREMENTS.

(38) LEVEL FLOAT. ELECTRICAL CONTRACTOR SHALL MAKE ALL POWER AND CONTROL CONNECTIONS PER THESE PLANS AND SPECIFICATIONS AND THE MANUFACTURERS REQUIREMENTS.

(39) SBR MOTOR CONTROL PANEL, PROVIDE AND INSTALL. ELECTRICAL CONTRACTOR SHALL MAKE ALL POWER AND CONTROL CONNECTIONS PER THESE PLANS AND SPECIFICATIONS AND THE MANUFACTURERS REQUIREMENTS.

(40) SBR EFFLUENT VALVE. ELECTRICAL CONTRACTOR SHALL MAKE ALL POWER AND CONTROL CONNECTIONS PER THESE PLANS AND SPECIFICATIONS AND THE MANUFACTURERS REQUIREMENTS.

(41) FLOW METER. ELECTRICAL CONTRACTOR SHALL MAKE ALL POWER AND CONTROL CONNECTIONS PER THESE PLANS AND SPECIFICATIONS AND THE MANUFACTURERS REQUIREMENTS.

(42) SBR AIR VALVE. ELECTRICAL CONTRACTOR SHALL MAKE ALL POWER AND CONTROL CONNECTIONS PER THESE PLANS AND SPECIFICATIONS AND THE MANUFACTURERS REQUIREMENTS.

(50) VARIABLE FREQUENCY DRIVE. ELECTRICAL CONTRACTOR SHALL MAKE ALL POWER AND CONTROL CONNECTIONS PER THESE PLANS AND SPECIFICATIONS AND THE MANUFACTURERS REQUIREMENTS.

(51) SBR AERATION BLOWER WITH INTEGRAL DISCONNECT. ELECTRICAL CONTRACTOR SHALL MAKE ALL POWER AND CONTROL CONNECTIONS PER THESE PLANS AND SPECIFICATIONS AND THE MANUFACTURERS REQUIREMENTS.

(52) DIGESTER AERATION BLOWER WITH INTEGRAL DISCONNECT. ELECTRICAL CONTRACTOR SHALL MAKE ALL POWER AND CONTROL CONNECTIONS PER THESE PLANS AND SPECIFICATIONS AND THE MANUFACTURERS REQUIREMENTS.

(53) PRESSURE TRANSDUCER. ELECTRICAL CONTRACTOR SHALL MAKE ALL POWER AND CONTROL CONNECTIONS PER THESE PLANS AND SPECIFICATIONS AND THE MANUFACTURERS REQUIREMENTS.

(54) TEMPERATURE TRANSDUCER. ELECTRICAL CONTRACTOR SHALL MAKE ALL POWER AND CONTROL CONNECTIONS PER THESE PLANS AND SPECIFICATIONS AND THE MANUFACTURERS REQUIREMENTS.

(60) 20A SLUDGE BAGGING SYSTEM CONTROL PANEL, BY VENDOR. ELECTRICAL CONTRACTOR SHALL MAKE ALL POWER AND CONTROL CONNECTIONS PER THESE PLANS AND SPECIFICATIONS AND THE MANUFACTURERS REQUIREMENTS.

(61) POTABLE WATER VALVE. ELECTRICAL CONTRACTOR SHALL MAKE ALL POWER AND CONTROL CONNECTIONS PER THESE PLANS AND SPECIFICATIONS AND THE MANUFACTURERS REQUIREMENTS.

(62) POLYMER METERING PUMP. ELECTRICAL CONTRACTOR SHALL MAKE ALL POWER AND CONTROL CONNECTIONS PER THESE PLANS AND SPECIFICATIONS AND THE MANUFACTURERS REQUIREMENTS.

(63) DRY POLYMER MIXER. ELECTRICAL CONTRACTOR SHALL MAKE ALL POWER AND CONTROL CONNECTIONS PER THESE PLANS AND SPECIFICATIONS AND THE MANUFACTURERS REQUIREMENTS.

(64) DEWATERING FEED PUMP. ELECTRICAL CONTRACTOR SHALL MAKE ALL POWER AND CONTROL CONNECTIONS PER THESE PLANS AND SPECIFICATIONS AND THE MANUFACTURERS REQUIREMENTS.

(70) 30A DRYING BED LIFT PUMP CONTROL PANEL, 480V, 3Ø, 4W. ELECTRICAL CONTRACTOR SHALL MAKE ALL POWER AND CONTROL CONNECTIONS PER THESE PLANS AND SPECIFICATIONS AND THE MANUFACTURERS REQUIREMENTS. SEE DETAIL 1 ON SHEET E4.4.

(71) DRYING BED LIFT PUMP. ELECTRICAL CONTRACTOR SHALL MAKE ALL POWER AND CONTROL CONNECTIONS PER THESE PLANS AND SPECIFICATIONS AND THE MANUFACTURERS REQUIREMENTS. SEE DETAIL 4 ON SHEET E4.5.

(72) LEVEL FLOAT. ELECTRICAL CONTRACTOR SHALL MAKE ALL POWER AND CONTROL CONNECTIONS PER THESE PLANS AND SPECIFICATIONS AND THE MANUFACTURERS REQUIREMENTS. SEE DETAIL 4 ON SHEET E4.5.

(80) OVERFLOW LIFT PUMP CONTROL PANEL, BY VENDOR. 240V, 1Ø, 3W. ELECTRICAL CONTRACTOR SHALL MAKE ALL POWER AND CONTROL CONNECTIONS PER THESE PLANS AND SPECIFICATIONS AND THE MANUFACTURERS REQUIREMENTS. SEE DETAIL 1 ON SHEET E4.4.

(81) OVERFLOW LIFT PUMP. ELECTRICAL CONTRACTOR SHALL MAKE ALL POWER AND CONTROL CONNECTIONS PER THESE PLANS AND SPECIFICATIONS AND THE MANUFACTURERS REQUIREMENTS. SEE DETAIL 4 ON SHEET E4.5.

(82) LEVEL FLOAT. ELECTRICAL CONTRACTOR SHALL MAKE ALL POWER AND CONTROL CONNECTIONS PER THESE PLANS AND SPECIFICATIONS AND THE MANUFACTURERS REQUIREMENTS. SEE DETAIL 4 ON SHEET E4.5.

(90) JOINT TRENCH WITH WATER LINES. MAINTAIN 24-INCH SEPARATION. SEE DETAIL 3 ON SHEET E4.3.

(91) STACKED #7 CONCRETE PULL BOX. INSTALL AS SHOWN OR AS NEEDED IF CONDUIT RUNS WILL EXCEED 360 DEGREE OF BENDS OR THE LENGTH EXCEEDS 400 FEET. INSTALL 1 FOR POWER AND 1 FOR CONTROL. SEE DETAIL 5 ON SHEET E4.3.

(92) STANCHION MOUNTED NEMA 4X SST JUNCTION BOXES. MAINTAIN 3' CLEARANCE IN FRONT OF EQUIPMENT. EXTRA SLACK SHALL REMAIN IN THE J-BOX FOR FUTURE LEVEL ADJUSTMENT. SEE DETAIL 2 ON SHEET E4.2 AND DETAIL 1 ON SHEET E4.4.

(93) TRAFFIC BOLLARD TO BE INSTALLED PER CIVIL PLANS. LOCATE OUT OF 4 FOOT WORKING SPACE ENVELOPE PER NEC.

(94) NON-FUSED DISCONNECT, NEMA 4X FOR OUTDOOR AND CLASS 1 DIV 1 WITHIN CLASSIFIED BOUNDARY. IF LOCATION IS ABOVE BOUNDARY, NEMA 4X WITH CLASSIFIED SEAL OFFS IS ACCEPTABLE. PROVIDE PERMANENT LABEL SUITABLE FOR CORROSIVE ENVIRONMENTS AND UV RESISTANT. MATCH LABEL NAMING CONVENTION WITH P&ID. SEE DETAIL 5 ON SHEET E4.2 & SEE DETAIL 1 ON SHEET E4.4.

(95) ROTARY TYPE DISCONNECT, NEMA 4X FOR OUTDOOR AND CLASS 1 DIV 1 WITHIN CLASSIFIED BOUNDARY. IF LOCATION IS ABOVE BOUNDARY, NEMA 4X WITH CLASSIFIED SEAL OFFS IS ACCEPTABLE. PROVIDE PERMANENT LABEL SUITABLE FOR CORROSIVE ENVIRONMENTS AND UV RESISTANT. MATCH LABEL NAMING CONVENTION WITH P&ID. SEE DETAIL 5 ON SHEET E4.2 & SEE DETAIL 1 ON SHEET E4.4.

(96) E-STOP, NEMA 4X FOR OUTDOOR AND CLASS 1 DIV 1 WITHIN CLASSIFIED BOUNDARY. IF LOCATION IS ABOVE BOUNDARY, NEMA 4X WITH CLASSIFIED SEAL OFFS IS ACCEPTABLE. PROVIDE PERMANENT LABEL SUITABLE FOR CORROSIVE ENVIRONMENTS AND UV RESISTANT. MATCH LABEL NAMING CONVENTION WITH P&ID. SEE DETAIL 5 ON SHEET E4.2.

(97) 20A 120V GFCI DUPLEX RECEPTACLE WITH METAL WEATHERPROOF WHILE-IN-USE AND LOCKABLE COVER INSTALLED PER DETAIL 1 ON SHEET E4.2.

(98) 20A 120V GFCI DUPLEX RECEPTACLE WITH METAL WEATHERPROOF WHILE-IN-USE AND LOCKABLE COVER INSTALLED ONTO LIGHT POLE. SEE DETAIL 2 ON SHEET E4.5.

(99) CLASSIFIED AREA VERIFY BOUNDARY WITH THE NFPA. INSTALL ANY PANELS, DISCONNECTS, SPLICES, ARC MAKING EQUIPMENT OUT OF THE BOUNDARY, WHERE NOT POSSIBLE THEN INSTALL CLASS 1 DIV 1 LISTED EQUIPMENT. ALL CONDUIT WITHIN BOUNDARY SHALL BE CLASS 1 DIV 1 OR 2 RATED AS REQUIRED BY THE BOUNDARY. USE PVC COATED THREADED RMC CONDUIT, INSTALL STAINLESS STEEL 316 ENCLOSURES, HARDWARE AND EQUIPMENT WITHIN 10 FEET OF THE BOUNDARY. INSTALL CLASSIFIED SEAL OFFS WITHIN 10 FEET OF THE BOUNDARY, AT A PANEL OR JUNCTION BOX IS PREFERRED.

ISSUED FOR BID

WRIGHT engineering corporation
ELECTRICAL ENGINEERING AND DESIGN
165 EAST CHILTON DRIVE
CHANDLER, ARIZONA 85225
PHONE: 480.497.5829
FAX: 480.497.5807
www.wrightengineering.us
Wright Project # 23319

CALL TWO WORKING DAYS BEFORE YOU DIG
602-263-1100
1-800-STAKE-IT
(OUTSIDE MARICOPA COUNTY)

THESE DRAWINGS ARE THE PROPERTY OF P.A.C.E. AND SHALL NOT BE REPRODUCED IN ANY MANNER NOR BE USED FOR CONSTRUCTION UNLESS STAMPED "ISSUED FOR CONSTRUCTION".

PREPARED BY: WRIGHT ENGINEERING
DESIGNED BY: JHB
DRAWN BY: XAG
CHECKED BY: JHB
SCALE: AS NOTED
DATE NOV 2025
JOB NO. B614

PREPARED BY: PACE Advanced Water Engineering
8723 E. VIA de COMMERCIO, SUITE A-204 | SCOTTSDALE, CA 85258
P: (408) 991-3595 | www.pacewater.com

TITLE: ELECTRICAL NOTES + LEGEND

JOB: TOWN OF JEROME WASTEWATER TREATMENT PLANT, YAVAPAI CO. AZ

SHEET E1.2
72 OF 99 SHEETS
JOB NO. B614

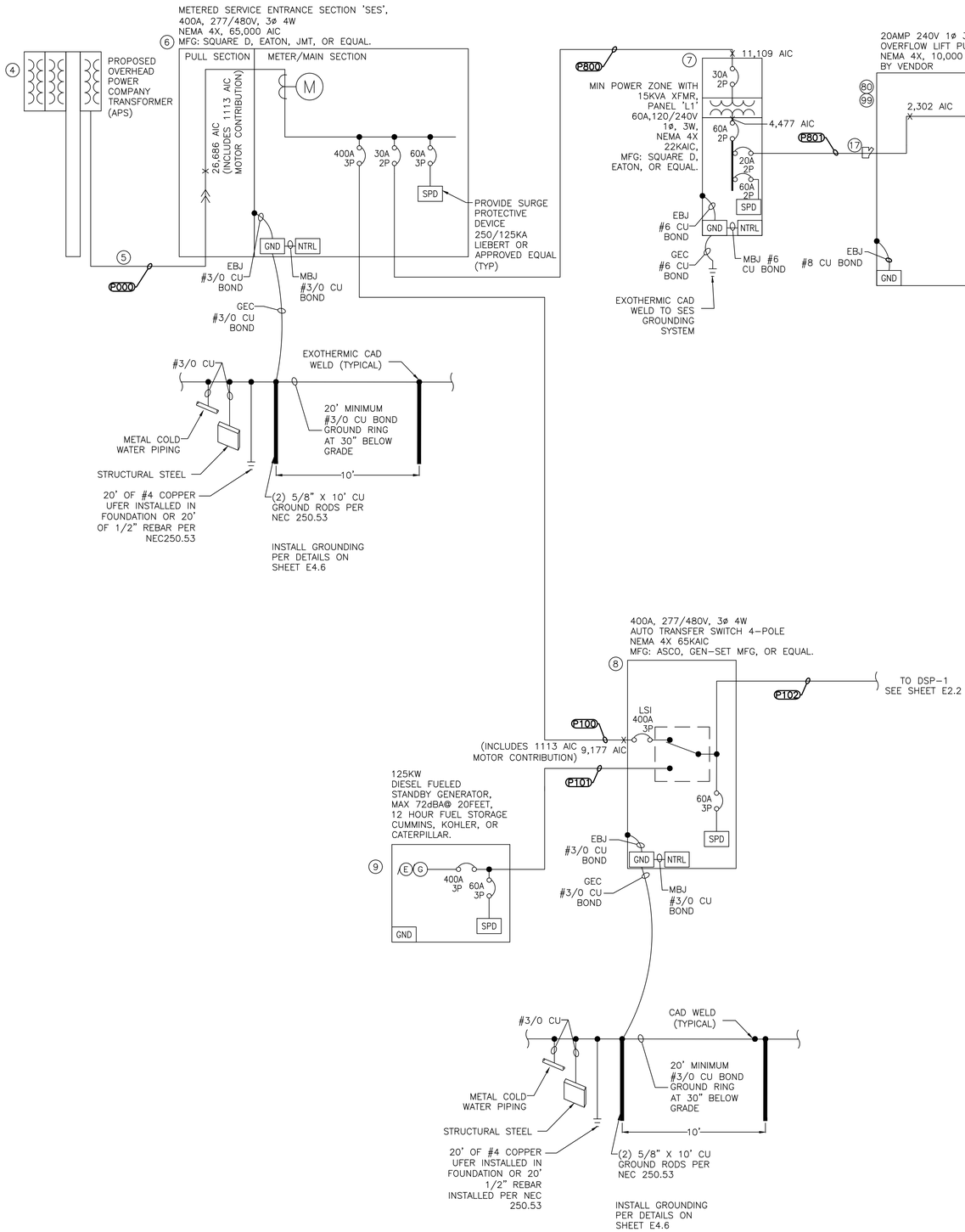

CONSTRUCTION NOTES

4. COORDINATE WITH APS TO REPLACE THE EXISTING POLE MOUNTED SINGLE PHASE TRANSFORMER. APS TO INSTALL THREE PHASE TRANSFORMERS. CONTRACTOR SHALL VERIFY LOCATION OF NEW TRANSFORMER WITH APS. APS PLANS WILL DETERMINE EXACT LOCATION AND TAKE PRECEDENCE OVER THESE DRAWINGS. COORDINATE ALL WORK WITH APS.
5. APS SERVICE LINE. TRENCH AND INSTALL CONDUIT PER APS SPECIFICATIONS. POWER COMPANY PLANS WILL DETERMINE EXACT LOCATION OF CONDUIT AND TAKE PRECEDENCE OVER THESE DRAWINGS.
6. SES, 400 AMP, 277/480V, 3ø, 4W, SEE DETAIL 1 ON E4.1.
7. MINI-POWER ZONE AND PANELBOARD. SEE DETAIL 1 ON E4.1.
8. ATS 400A 277/480V, 3ø, 4W, SEE DETAIL 2 ON SHEET E4.1.
9. GENERATOR 125KW, 277/480V, 3ø, 4W, SEE DETAIL 1 ON E4.3.
17. CLASSIFIED SEAL OFF LISTED FOR CLASS 1 DIV 1. LOCATE WITHIN 10 FEET OF CLASSIFIED AREA BOUNDARY. PVC COATED RMS EYS TYPE OR EQUIVALENT. SEAL SHALL HAVE SEALING COMPOUND CHICO, OR EQUAL.
80. OVERFLOW LIFT PUMP CONTROL PANEL, BY VENDOR. 240V, 1ø, 3W. ELECTRICAL CONTRACTOR SHALL MAKE ALL POWER AND CONTROL CONNECTIONS PER THESE PLANS AND SPECIFICATIONS AND THE MANUFACTURERS REQUIREMENTS. SEE DETAIL 1 ON SHEET E4.4.
81. OVERFLOW LIFT PUMP. ELECTRICAL CONTRACTOR SHALL MAKE ALL POWER AND CONTROL CONNECTIONS PER THESE PLANS AND SPECIFICATIONS AND THE MANUFACTURERS REQUIREMENTS. SEE DETAIL 4 ON SHEET E4.5.
99. CLASSIFIED AREA VERIFY BOUNDARY WITH THE NFPA. INSTALL ANY PANELS, DISCONNECTS, SPLICES, ARC MAKING EQUIPMENT OUT OF THE BOUNDARY, WHERE NOT POSSIBLE THEN INSTALL CLASS 1 DIV 1 LISTED EQUIPMENT. ALL CONDUIT WITHIN BOUNDARY SHALL BE CLASS 1 DIV 1 OR 2 RATED AS REQUIRED BY THE BOUNDARY. USE PVC COATED THREADED RMC CONDUIT. INSTALL STAINLESS STEEL 316 ENCLOSURES, HARDWARE AND EQUIPMENT WITHIN 10 FEET OF THE BOUNDARY. INSTALL CLASSIFIED SEAL OFFS WITHIN 10 FEET OF THE BOUNDARY, AT A PANEL OR JUNCTION BOX IS PREFERRED.

1A SINGLE LINE DIAGRAM
NO SCALE

277/480V 3ø 4W

NO	BY	DATE	REVISIONS	DATE	APP.

Registered Professional Engineer (Electrical) Certificate No. 73954 JASON BELLEDIN Date Signed 9-30-27 Expires 9-30-27

PREPARED BY: WRIGHT ENGINEERING
DESIGNED BY: JHB
DRAWN BY: XAG
CHECKED BY: JHB
SCALE: AS NOTED
DATE: NOV 2025
JOB NO.: B614

THESE DRAWINGS ARE THE PROPERTY OF P.A.C.E. AND SHALL NOT BE REPRODUCED IN ANY MANNER NOR BE USED FOR CONSTRUCTION UNLESS STAMPED "ISSUED FOR CONSTRUCTION".

TITLE: ELECTRICAL SINGLE LINE DIAGRAM I

JOB: TOWN OF JEROME WASTEWATER TREATMENT PLANT YAVAPAI CO. AZ

ISSUED FOR BID

PREPARED BY:
PACE Advanced Water Engineering
8723 E. Via de Commercio, Suite 104, Scottsdale, CA 85258
p. (408) 991-3595 | www.pacewater.com

SHEET E2.1
73 OF 99 SHEETS

JOB NO. B614

WRIGHT engineering corporation
ELECTRICAL ENGINEERING AND DESIGN
165 EAST CHILTON DRIVE
CHANDLER, ARIZONA 85225
PHONE: 480.497.5829
FAX: 480.497.5807
www.wrightengineering.us
Wright Project # 23319

CALL TWO WORKING DAYS BEFORE YOU DIG
602-263-1100
1-800-STAKE-IT
(OUTSIDE MARICOPA COUNTY)

H:\2025\2515-Jerome WW TP\2515-E Dwg Feb 03 - by paula at 11/4/25 at 4:56:48 PM

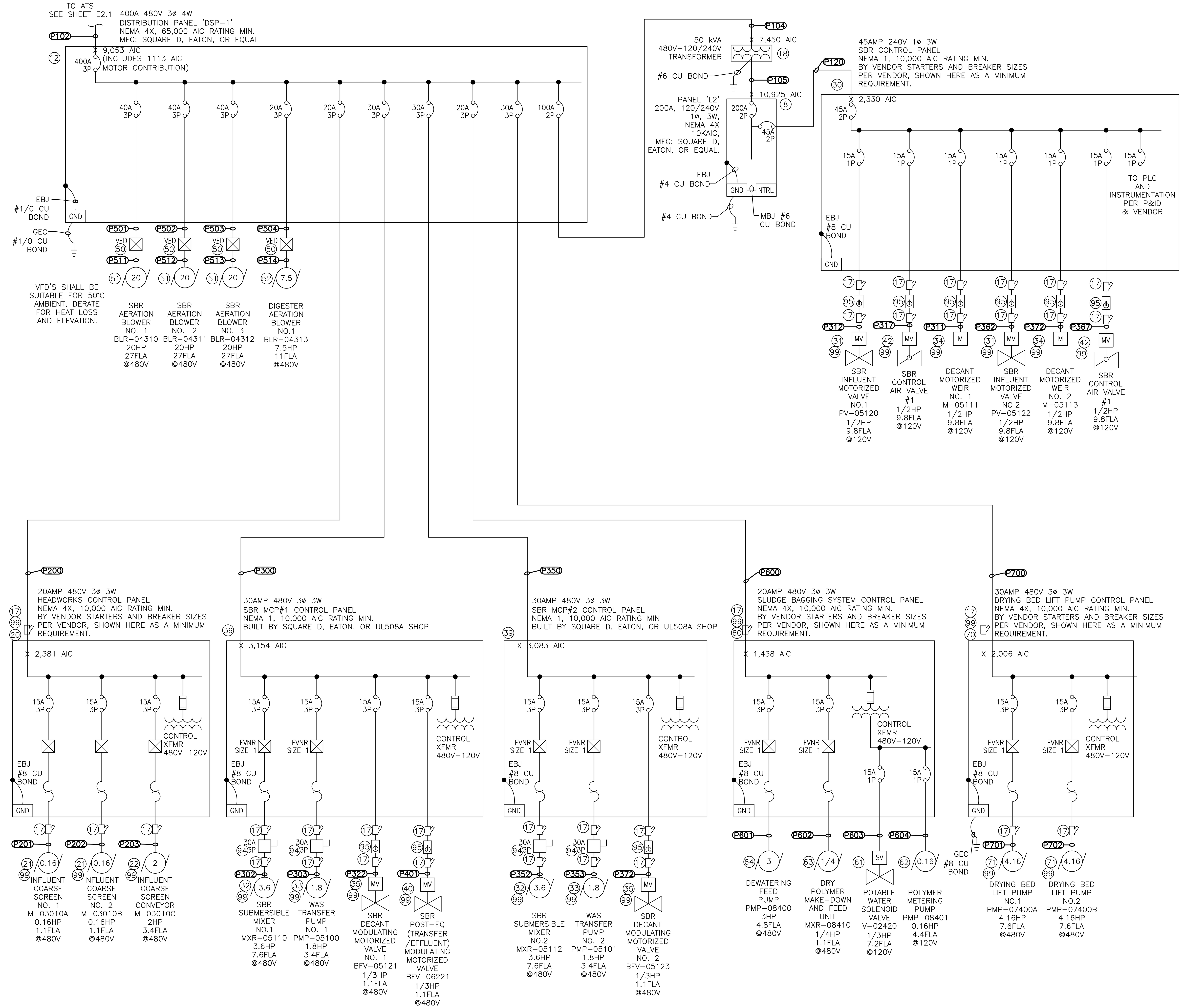

1B SINGLE LINE DIAGRAM
NO SCALE

CONSTRUCTION NOTES

(12) DISTRIBUTION PANEL DSP-1 400A 277/480V, 3ø, 4W, SEE DETAIL 2 ON SHEET E4.1.

(17) CLASSIFIED SEAL OFF LISTED FOR CLASS 1 DIV 1. LOCATE WITHIN 10 FEET OF CLASSIFIED AREA BOUNDARY. PVC COATED RMS EYS TYPE OR EQUIVALENT. SEAL SHALL HAVE SEALING COMPOUND CHICO, OR EQUAL.

(20) 20A HEADWORKS CONTROL PANEL, BY VENDOR CLASS 1 DIVISION 2 LISTED. ELECTRICAL CONTRACTOR SHALL MAKE ALL POWER AND CONTROL CONNECTIONS PER THESE PLANS AND SPECIFICATIONS AND THE MANUFACTURERS REQUIREMENTS. SEE DETAIL 1 ON SHEET E4.4.

(21) INFLUENT COARSE SCREEN MOTOR. ELECTRICAL CONTRACTOR SHALL MAKE ALL POWER AND CONTROL CONNECTIONS PER THESE PLANS AND SPECIFICATIONS AND THE MANUFACTURERS REQUIREMENTS.

(22) INFLUENT CONVEYOR MOTOR. ELECTRICAL CONTRACTOR SHALL MAKE ALL POWER AND CONTROL CONNECTIONS PER THESE PLANS AND SPECIFICATIONS AND THE MANUFACTURERS REQUIREMENTS.

(30) SBR PANEL BY VENDOR, ELECTRICAL CONTRACTOR SHALL MAKE ALL POWER AND CONTROL CONNECTIONS PER THESE PLANS AND SPECIFICATIONS AND THE MANUFACTURERS REQUIREMENTS.

(31) SBR INFLUENT VALVE. ELECTRICAL CONTRACTOR SHALL MAKE ALL POWER AND CONTROL CONNECTIONS PER THESE PLANS AND SPECIFICATIONS AND THE MANUFACTURERS REQUIREMENTS.

(32) SBR SUBMERSIBLE MIXER. ELECTRICAL CONTRACTOR SHALL MAKE ALL POWER AND CONTROL CONNECTIONS PER THESE PLANS AND SPECIFICATIONS AND THE MANUFACTURERS REQUIREMENTS.

(33) WAS TRANSFER PUMP. ELECTRICAL CONTRACTOR SHALL MAKE ALL POWER AND CONTROL CONNECTIONS PER THESE PLANS AND SPECIFICATIONS AND THE MANUFACTURERS REQUIREMENTS.

(34) DECANT MOTOR. ELECTRICAL CONTRACTOR SHALL MAKE ALL POWER AND CONTROL CONNECTIONS PER THESE PLANS AND SPECIFICATIONS AND THE MANUFACTURERS REQUIREMENTS.

(35) SBR DECANT VALVE. ELECTRICAL CONTRACTOR SHALL MAKE ALL POWER AND CONTROL CONNECTIONS PER THESE PLANS AND SPECIFICATIONS AND THE MANUFACTURERS REQUIREMENTS.

(39) SBR MOTOR CONTROL PANEL, PROVIDE AND INSTALL. ELECTRICAL CONTRACTOR SHALL MAKE ALL POWER AND CONTROL CONNECTIONS PER THESE PLANS AND SPECIFICATIONS AND THE MANUFACTURERS REQUIREMENTS.

(40) SBR EFFLUENT VALVE. ELECTRICAL CONTRACTOR SHALL MAKE ALL POWER AND CONTROL CONNECTIONS PER THESE PLANS AND SPECIFICATIONS AND THE MANUFACTURERS REQUIREMENTS.

(42) SBR AIR VALVE. ELECTRICAL CONTRACTOR SHALL MAKE ALL POWER AND CONTROL CONNECTIONS PER THESE PLANS AND SPECIFICATIONS AND THE MANUFACTURERS REQUIREMENTS.

(50) VARIABLE FREQUENCY DRIVE. ELECTRICAL CONTRACTOR SHALL MAKE ALL POWER AND CONTROL CONNECTIONS PER THESE PLANS AND SPECIFICATIONS AND THE MANUFACTURERS REQUIREMENTS.

(51) SBR AERATION BLOWER WITH INTEGRAL DISCONNECT. ELECTRICAL CONTRACTOR SHALL MAKE ALL POWER AND CONTROL CONNECTIONS PER THESE PLANS AND SPECIFICATIONS AND THE MANUFACTURERS REQUIREMENTS.

(52) DIGESTER AERATION BLOWER WITH INTEGRAL DISCONNECT. ELECTRICAL CONTRACTOR SHALL MAKE ALL POWER AND CONTROL CONNECTIONS PER THESE PLANS AND SPECIFICATIONS AND THE MANUFACTURERS REQUIREMENTS.

(60) 20A SLUDGE BAGGING SYSTEM CONTROL PANEL, BY VENDOR. ELECTRICAL CONTRACTOR SHALL MAKE ALL POWER AND CONTROL CONNECTIONS PER THESE PLANS AND SPECIFICATIONS AND THE MANUFACTURERS REQUIREMENTS.

(61) POTABLE WATER VALVE. ELECTRICAL CONTRACTOR SHALL MAKE ALL POWER AND CONTROL CONNECTIONS PER THESE PLANS AND SPECIFICATIONS AND THE MANUFACTURERS REQUIREMENTS.

(62) POLYMER METERING PUMP. ELECTRICAL CONTRACTOR SHALL MAKE ALL POWER AND CONTROL CONNECTIONS PER THESE PLANS AND SPECIFICATIONS AND THE MANUFACTURERS REQUIREMENTS.

(63) DRY POLYMER MIXER. ELECTRICAL CONTRACTOR SHALL MAKE ALL POWER AND CONTROL CONNECTIONS PER THESE PLANS AND SPECIFICATIONS AND THE MANUFACTURERS REQUIREMENTS.

(64) DEWATERING FEED PUMP. ELECTRICAL CONTRACTOR SHALL MAKE ALL POWER AND CONTROL CONNECTIONS PER THESE PLANS AND SPECIFICATIONS AND THE MANUFACTURERS REQUIREMENTS.

(70) 30A DRYING BED LIFT PUMP CONTROL PANEL, 480V, 3ø, 4W. ELECTRICAL CONTRACTOR SHALL MAKE ALL POWER AND CONTROL CONNECTIONS PER THESE PLANS AND SPECIFICATIONS AND THE MANUFACTURERS REQUIREMENTS. SEE DETAIL 1 ON SHEET E4.4.

(71) DRYING BED LIFT PUMP. ELECTRICAL CONTRACTOR SHALL MAKE ALL POWER AND CONTROL CONNECTIONS PER THESE PLANS AND SPECIFICATIONS AND THE MANUFACTURERS REQUIREMENTS. SEE DETAIL 4 ON SHEET E4.5.

(94) NON-FUSED DISCONNECT, NEMA 4X FOR OUTDOOR AND CLASS 1 DIV 1 WITHIN CLASSIFIED BOUNDARY. IF LOCATION IS ABOVE BOUNDARY, NEMA 4X WITH CLASSIFIED SEAL OFFS IS ACCEPTABLE. PROVIDE PERMANENT LABEL SUITABLE FOR CORROSIVE ENVIRONMENTS AND UV RESISTANT. MATCH LABEL NAMING CONVENTION WITH P&ID. SEE DETAIL 5 ON SHEET E4.2 & SEE DETAIL 1 ON SHEET E4.4.

(95) ROTARY TYPE DISCONNECT, NEMA 4X FOR OUTDOOR AND CLASS 1 DIV 1 WITHIN CLASSIFIED BOUNDARY. IF LOCATION IS ABOVE BOUNDARY, NEMA 4X WITH CLASSIFIED SEAL OFFS IS ACCEPTABLE. PROVIDE PERMANENT LABEL SUITABLE FOR CORROSIVE ENVIRONMENTS AND UV RESISTANT. MATCH LABEL NAMING CONVENTION WITH P&ID. SEE DETAIL 5 ON SHEET E4.2 & SEE DETAIL 1 ON SHEET E4.4.

(99) CLASSIFIED AREA VERIFY BOUNDARY WITH THE NFPA. INSTALL ANY PANELS, DISCONNECTS, SPLICES, ARC MAKING EQUIPMENT OUT OF THE BOUNDARY, WHERE NOT POSSIBLE THEN INSTALL CLASS 1 DIV 1 LISTED EQUIPMENT. ALL CONDUIT WITHIN BOUNDARY SHALL BE CLASS 1 DIV 1 OR 2 RATED AS REQUIRED BY THE BOUNDARY. USE PVC COATED THREADED RMC CONDUIT, INSTALL STAINLESS STEEL 316 ENCLOSURES, HARDWARE AND EQUIPMENT WITHIN 10 FEET OF THE BOUNDARY. INSTALL CLASSIFIED SEAL OFFS WITHIN 10 FEET OF THE BOUNDARY, AT A PANEL OR JUNCTION BOX IS PREFERRED.

ISSUED FOR BID

WRIGHT engineering corporation
ELECTRICAL ENGINEERING AND DESIGN
165 EAST CHILTON DRIVE
CHANDLER, ARIZONA 85225
PHONE: 480.497.5829
FAX: 480.497.5807
www.wrightengineering.us
Wright Project # 23319

CALL TWO WORKING DAYS BEFORE YOU DIG
602-263-1100
1-800-STAKE-IT
(OUTSIDE MARICOPA COUNTY)

NO	BY	DATE	REVISIONS	DATE	APP.

Registered Professional Engineer (Electrical), Certificate No. 73954, JACOB BIELEFELDT, Date Signed 11-24-2025, Expires 9-30-27

THESE DRAWINGS ARE THE PROPERTY OF P.A.C.E. AND SHALL NOT BE REPRODUCED IN ANY MANNER NOR BE USED FOR CONSTRUCTION UNLESS STAMPED "ISSUED FOR CONSTRUCTION".

PREPARED BY: WRIGHT ENGINEERING
DESIGNED BY: JHB
DRAWN BY: XAG
CHECKED BY: JHB
SCALE: AS NOTED
DATE: NOV 2025
JOB NO.: B614

TITLE: ELECTRICAL SINGLE LINE DIAGRAM II

JOB: TOWN OF JEROME WASTEWATER TREATMENT PLANT, YAVAPAI CO., AZ

PREPARED BY: PACE Advanced Water Engineering
8723 E. VIA de COMMERICO, SUITE A-204 | SCOTTSDALE, CA 85258
P: (408) 991-3595 | www.pacewater.com

SHEET E2.2
74 OF 99 SHEETS
JOB NO. B614

H:\2023\23319-Jerome WWTP\23319-E.dwg - Tab: E2.2 - by jacobb on 11/24/25 at 6:56:46 PM

SES LOAD CALCULATION SUMMARY

LOAD DESCRIPTION	LOAD	STANDBY
MCC–A	256.6	256.6
PANEL L1	5.0	0
TOTAL AMPS AT 480V 3ø	261.6	256.6
TOTAL KVA AT 480V 3ø	217.5	217.5

MCC LOAD CALCULATION SUMMARY

LOAD DESCRIPTION	LOAD	STANDBY
SBR AERATION BLOWER NO. 1 BLR–04310 (20HP)	27.0	27.0
SBR AERATION BLOWER NO. 2 BLR–04311 (20HP)	27.0	27.0
SBR AERATION BLOWER NO. 3 BLR–04312 (20HP)	27.0	27.0
DIGESTION AERATION BLOWER NO. 1 BLR–04313 (7.5HP)	11.0	11.0
SBR SUBMERSIBLE MIXER NO. 1 MXR–05110 (3.6HP)	7.6	7.6
SBR SUBMERSIBLE MIXER NO. 2 MXR–05112 (3.6HP)	7.6	7.6
WAS TRANSFER PUMP NO. 1 PMP–05100 (1.8HP)	3.4	3.4
WAS TRANSFER PUMP NO. 2 PMP–05101 (1.8HP)	3.4	3.4
SBR DECANT MODULATING VALVE NO. 1 BFV–05121 (1/3HP)	1.1	1.1
SBR DECANT VALVE NO. 2 BFV–05123 (1/3HP)	1.1	1.1
SBR POST–EQ VALVE BFV–05121 (1/3HP)	1.1	1.1
DRYING BED LIFT PUMP CONTROL PANEL	19.1	19.1
HEADWORKS CONTROL PANEL	5.6	5.6
SLUDGE BAGGING SYSTEM CONTROL PANEL	12.1	12.1
PANEL 'L2'	95.7	95.7
25% OF THE LARGEST MOTOR	**6.8**	**6.8**
TOTAL AMPS / 480V 3ø	256.6	256.6
TOTAL KVA AT / ø	213.3	213.3

DRYING BED LIFT PUMP CONTROL PANEL LOAD CALCULATION SUMMARY

LOAD DESCRIPTION	LOAD	STANDBY
DRYING BED LIFT PUMP NO. 1 PMP–07400A (4.16HP)	7.6	7.6
DRYING BED LIFT PUMP NO. 2 PMP–07400B (4.16HP)	7.6	7.6
CONTROL	2.0	2.0
25% OF THE LARGEST MOTOR	1.9	1.9
TOTAL AMPS / 480V 3ø	19.1	19.1
TOTAL KVA AT / ø	15.9	15.9

HEADWORKS CONTROL PANEL LOAD CALCULATION SUMMARY

LOAD DESCRIPTION	LOAD	STANDBY
INFLUENT COARSE SCREEN NO. 1 M–03010A (.16HP)	1.1	1.1
INFLUENT COARSE SCREEN NO. 2 M–03010B (.16HP)	1.1	1.1
INFLUENT COARSE SCREEN CONVERYOR M–03010C (1/2HP)	1.1	1.1
CONTROL	2.0	2.0
25% OF THE LARGEST MOTOR	**0.3**	**0.3**
TOTAL AMPS / 480V 3ø	5.6	5.6
TOTAL KVA AT / ø	4.6	4.6

SLUDGE BAGGING SYSTEM CONTROL PANEL LOAD CALCULATION SUMMARY

LOAD DESCRIPTION	LOAD	STANDBY
DEWATERING FEED PUMP PMP–08400 (3HP)	4.8	4.8
DRY POLYMER MAKE–DOWN AND FEED UNIT MXR–08410 (1/4HP)	1.1	1.1
CONTROL	5.0	5.0
25% OF THE LARGEST MOTOR	**1.2**	**1.2**
TOTAL AMPS / 480V 3ø	12.1	12.1
TOTAL KVA AT / ø	10.1	10.1

SBR CONTROL PANEL LOAD CALCULATION SUMMARY

LOAD DESCRIPTION	LOAD Aø	LOAD Bø	STANDBY
SBR INFLUENT VALVE NO. 1 PV–05120 (1/2HP)	9.8		9.8
SBR INFLUENT VALVE NO. 2 PV–05122 (1/2HP)		9.8	9.8
DECANT MOTOR NO. 1 M–05111 (1/2HP)	9.8		9.8
DECANT MOTOR NO. 2 M–05113 (1/2HP)		9.8	9.8
SBR AIR VALVE #1 (1/2 HP)	9.8		9.8
SBR AIR VALVE #2 (1/2 HP)		9.8	9.8
CONTROL	2.0		2.0
25% OF THE LARGEST MOTOR	**2.5**		**2.5**
TOTAL AMPS / 120V 1ø	33.9	29.4	33.9
TOTAL KVA AT / ø	4.1	3.5	4.1

PANEL NAME: L1			120/240V, 1ø, 3W				60A MAIN BKR		
LOCATION: SEE SITE PLAN			TYPE: PLUG–IN				PEDESTAL MTD., NEMA 4X		
CKT NO.	BKR SIZE	DESCRIPTION	LOAD	Aø	Bø	LOAD	DESCRIPTION	BKR SIZE	CKT NO.
1	20/	OVERFLOW LIFT PUMP MOTOR CONTROL PANEL	1200	1200		0	SPARE	20/1	2
3	/2		1200		1200	0	SPARE	20/1	4
5	20/1	SPARE	0	0		0	SPARE	20/1	6
CODE TOTAL VA/ø				1200	1200	*INDICATES LOAD @ 125%			
CODE TOTAL AMPS/ø				10.0	10.0	22,000 AIC BREAKERS			

PANEL NAME: L2			120/240V, 1ø, 3W				200A MAIN BKR		
LOCATION: BUILDING			TYPE: PLUG–IN				WALL MTD., NEMA 4X		
CKT NO.	BKR SIZE	DESCRIPTION	LOAD	Aø	Bø	LOAD	DESCRIPTION	BKR SIZE	CKT NO.
1	20/1	*BUILDING EXTERIOR LIGHTS	235	435		200	FLOW METER	20/1	2
3	20/1	*LAB LIGHTS + BLOWER ROOM + EM LIGHT	963		5031	4068	SBR CONTROL PANEL	45/	4
5	20/1	BLOWER ROOM + EXTERIOR RECEPTACLE	900	4428		3528		/2	6
7	20/1	*RESTROOM LIGHTS + EXHAUST FAN + RECEPTACLE	420		1620	1200	GENERATOR ON BOARD PANEL	60/	8
9	20/1	LAB RECEPTACLES 3	1080	2280		1200		/2	10
11	20/1	LAB RECEPTACLES 4	1440		7940	6500	LAB TANKLESS WATER HEATER	60/	12
13	20/	*SBR AREA LIGHTING*	302	6802		6500		/2	14
15	/2		302		6802	6500	RR TANKLESS WATER HEATER	60/	16
17	20/	A/C UNIT OUTDOOR	1759	8259		6500		/2	18
19	/2		1759		1759	0	BUSSED SPACE		20
21	20/1	A/C UNIT INDOOR	600	600		0	BUSSED SPACE		22
23		BUSSED SPACE	0		0	0	BUSSED SPACE		24
25		BUSSED SPACE	0	0		0	BUSSED SPACE		26
27		BUSSED SPACE	0		0	0	BUSSED SPACE		28
29		BUSSED SPACE	0	0		0	BUSSED SPACE		30
31		BUSSED SPACE	0		0	0	BUSSED SPACE		32
33		BUSSED SPACE	0	0		0	BUSSED SPACE		34
35		BUSSED SPACE	0		0	0	BUSSED SPACE		36
37		BUSSED SPACE	0	0		0	BUSSED SPACE		38
39		BUSSED SPACE	0		0	0	BUSSED SPACE		40
41		BUSSED SPACE	0	0		0	BUSSED SPACE		42
CODE TOTAL VA/ø				22804	23152	*INDICATES LOAD @ 125%			
CODE TOTAL AMPS/ø				190.0	192.9	22,000 AIC BREAKERS			

WRIGHT engineering corporation
ELECTRICAL ENGINEERING AND DESIGN
165 EAST CHILTON DRIVE
CHANDLER, ARIZONA 85225
PHONE: 480.497.5829
FAX: 480.497.5807
www.wrightengineering.us
Wright Project # 23319

CALL TWO WORKING DAYS BEFORE YOU DIG
602-263-1100
1-800-STAKE-IT
(OUTSIDE MARICOPA COUNTY)

NO	BY	REVISIONS	DATE	APP.

Registered Professional Engineer (Electrical) Certificate No. 73954 JASON BILLEDT 09-30-27 Expires 9-30-27

PREPARED BY: WRIGHT ENGINEERING
DESIGNED BY: JHB
DRAWN BY: XAG
CHECKED BY: JHB
SCALE: AS NOTED
DATE: NOV 2025
JOB NO.: B614

THESE DRAWINGS ARE THE PROPERTY OF P.A.C.E. AND SHALL NOT BE REPRODUCED IN ANY MANNER NOR BE USED FOR CONSTRUCTION UNLESS STAMPED "ISSUED FOR CONSTRUCTION".

TITLE: ELECTRICAL LOAD CALCULATIONS

JOB: TOWN OF JEROME WASTEWATER TREATMENT PLANT
YAVAPAI CO. AZ

ISSUED FOR BID

PREPARED BY:
PACE
Advanced Water Engineering
8723 E. VIA de COMERCIO, SUITE A, SCOTTSDALE, CA 85258
P: (480) 991-3595 | www.pacewater.com

SHEET
E2.3
75 OF 99 SHEETS

JOB NO. B614

N:\2025\2519-Jerome WWTP\2519.dwg, Tab: E2.3, by pseals on 11/05/25 at 04:46 PM

CONDUIT AND WIRE SCHEDULE FOR POWER

CONDUIT NO.	CONDUIT SIZE	WIRE POWER	WIRE GROUND	FROM	TO	REMARKS
POWER COMPANY						
P000	PER POWER COMPANY (APS) PLANS AND SPECIFICATIONS			POWER COMPANY TRANSFORMER	SES	
MAIN POWER						
P100	(2) 3.5"	4-#350KCMIL (2) PARALLEL	1-#3/0 (2) PARALLEL	SES	AUTOMATIC TRANSFER SWITCH	(2) PARALLEL CONDUCTORS TOTAL DISTANCE 1085'
P101	(2)3"	4-#3/0 (2) PARALLEL	1-#2 (2) PARALLEL	GENERATOR	AUTOMATIC TRANSFER SWITCH	(2) PARALLEL CONDUCTORS
P102	(2)3"	4-#3/0 (2) PARALLEL	1-#2 (2) PARALLEL	AUTOMATIC TRANSFER SWITCH	DSP-1	(2) PARALLEL CONDUCTORS
P103	1"	3-#10	1-#10	PANEL 'L2'	GENERATOR'S ON-BOARD PANEL	
P104	1.5"	2-#2	1-#8	DISTRIBUTION PANEL DSP-1	50KVA TRANSFORMER T2	
P105	2"	3-#3/0	1-#6	50KVA TRANSFORMER T2	PANEL 'L2'	
P120	1"	3-#6	1-#10	PANEL 'L2'	SBR PANEL	
P121	1"	2-#12	1-#12	PANEL 'L2'	AREA LIGHT	CKT. L2-7
P122	1"	2-#12	1-#12	PANEL 'L2'	BUILDING MISC.	SEE SITE FOR CKT.
P123	1"	2-#12	1-#12	PANEL 'L2'	SITE RECEPTACLE	CKT. L2-9
P131	1"	PULL ROPE		SEE SITE PLAN		SPARE
P132	2"	PULL ROPE		SEE SITE PLAN		SPARE
P133	3.5"	PULL ROPE		SEE SITE PLAN		SPARE
HEADWORKS STATION						
P200	1"	3-#10	1-#10	DISTRIBUTION PANEL DSP-1	HEADWORKS CONTROL PANEL	
P201	1"	3-#12	1-#12	HEADWORKS STATION CONTROL PANEL	INFLUENT COARSE SCREEN	M-03010A
P202	1"	3-#12	1-#12	HEADWORKS STATION CONTROL PANEL	INFLUENT COARSE SCREEN	M-03010B
P203	1"	3-#12	1-#12	HEADWORKS STATION CONTROL PANEL	INFLUENT COARSE SCREEN CONVEYOR	M-03010C
P204	1"	2-#12	1-#12	HEADWORKS STATION CONTROL PANEL	SOLENOID VALVE	V-02020

CONDUIT AND WIRE SCHEDULE FOR POWER

CONDUIT NO.	CONDUIT SIZE	WIRE POWER	WIRE GROUND	FROM	TO	REMARKS
SEQUENCING BATCH REACTOR						
P300	1"	3-#10	1-#10	DISTRIBUTION PANEL DSP-1	MCP#1	
P301A	1"	3-#12	1-#12	MCP#1	J-BOX P1	MXR-05110
		3-#12	1-#12			PMP-05100
		3-#12	1-#12			BFV-05121
P301B	1"	2-#12	1-#12	SBR CONTROL PANEL		M-05111
		2-#12	1-#12			PV-05120
		2-#12	1-#12			SBR AIR VALVE #1
P302	1"	3-#12	1-#12	J-BOX P1	SBR MIXER #1	MXR-05110
P303	1"	3-#12	1-#12		WAS TRANSFER PUMP #1	PMP-05100
P322	1"	3-#12	1-#12		DECANTER VALVE #1	BFV-05121
P311	1"	2-#12	1-#12		DECANTER #1	M-05111
P312	1"	2-#12	1-#12		SBR INFLUENT VALVE #1	PV-05120
P317	1"	2-#12	1-#12		SBR AIR VALVE #1	
P350	1"	3-#12	1-#12	DISTRIBUTION PANEL DSP-1	MCP#2	
P351A	1"	3-#12	1-#12	MCP#2	J-BOX P2	MXR-05112
		3-#12	1-#12			PMP-05101
		3-#12	1-#12			BFV-05123
P351B	1"	2-#12	1-#12	SBR CONTROL PANEL		M-05113
		2-#12	1-#12			PV-05122
		2-#12	1-#12			SBR AIR VALVE #2
P352	1"	3-#12	1-#12	J-BOX P2	SBR MIXER #2	MXR-05112
P353	1"	3-#12	1-#12		WAS TRANSFER PUMP #2	PMP-05101
P372	1"	3-#12	1-#12		DECANTER VALVE #2	BFV-05123
P361	1"	2-#12	1-#12		DECANTER #2	M-05113
P362	1"	2-#12	1-#12		SBR INFLUENT VALVE #2	PV-05122
P367	1"	2-#12	1-#12		SBR AIR VALVE #2	

CONDUIT AND WIRE SCHEDULE FOR POWER

CONDUIT NO.	CONDUIT SIZE	WIRE POWER	WIRE GROUND	FROM	TO	REMARKS
CHLORINE CONTACT AND DIGESTER						
P400	3"	2-#12	1-#12	PANEL 'L2'	FLOW METER	FM-06240
P401	3"	2-#12	1-#12	DISTRIBUTION PANEL DSP-1	BUTTERFLY VALVE	BFV-06221
BLOWER ROOM						
P501	1"	3-#8	1-#8	DISTRIBUTION PANEL DSP-1	AERATION BLOWER VFD #1	BLR-04310
P511	1"	3-#8	1-#8	AERATION BLOWER VFD #1	BLR-04310	
P502	1"	3-#8	1-#8	DISTRIBUTION PANEL DSP-1	AERATION BLOWER VFD #2	BLR-04311
P512	1"	3-#8	1-#8	AERATION BLOWER VFD #2	BLR-04311	
P503	1"	3-#8	1-#8	DISTRIBUTION PANEL DSP-1	AERATION BLOWER VFD #3	BLR-04312
P513	1"	3-#8	1-#8	AERATION BLOWER VFD #3	BLR-04312	
P504	1"	3-#12	1-#12	DISTRIBUTION PANEL DSP-1	DIGESTION BLOWER VFD #4	BLR-04313
P514	1"	3-#12	1-#12	DIGESTION BLOWER VFD #4	BLR-04313	
DEWATERING						
P600	1"	3-#10	1-#10	DISTRIBUTION PANEL DSP-1	SLUDGE BAGGING SYSTEM CONTROL PANEL	
P601	1"	3-#12	1-#12	SLUDGE BAGGING SYSTEM CONTROL PANEL	DEWATERING FEED PUMP	PMP-08400
P602	1"	3-#12	1-#12	SLUDGE BAGGING SYSTEM CONTROL PANEL	DRY POLYMER MIXING UNIT	MXR-08410
P603	1"	2-#12	1-#12	SLUDGE BAGGING SYSTEM CONTROL PANEL	POTABLE WATER VALVE	V-02420
P604	1"	2-#12	1-#12	SLUDGE BAGGING SYSTEM CONTROL PANEL	POLYMER PUMP	PMP-08401
DRYING BED LIFT STATION						
P700	2"	3-#8	1-#8	DISTRIBUTION PANEL DSP-1	DRYING BED LIFT STATION CONTROL PANEL	TOTAL DISTANCE 225'
P701	1"	3-#12	1-#12	DRYING BED LIFT STATION CONTROL PANEL	DRYING BED LIFT PUMP	PMP-07400A
P702	1"	3-#12	1-#12	DRYING BED LIFT STATION CONTROL PANEL	DRYING BED LIFT PUMP	PMP-07400B
P703	1"	3-#12	1-#12	DRYING BED LIFT STATION CONTROL PANEL	RECEPTACLE & AREA LIGHT	
OVERFLOW LIFT STATION						
P800	1"	2-#10	1-#10	SES	PANEL 'L1'	
P801	1"	2-#12	1-#12	PANEL 'L1'	OVERFLOW CONTROL PANEL	
P802	1"	2-#12	1-#12	OVERFLOW CONTROL PANEL	OVERFLOW PUMP	PMP-07401

NO	BY	DATE	REVISIONS	DATE	APP.

THESE DRAWINGS ARE THE PROPERTY OF P.A.C.E. AND SHALL NOT BE REPRODUCED IN ANY MANNER NOR BE USED FOR CONSTRUCTION UNLESS STAMPED "ISSUED FOR CONSTRUCTION".

Registered Professional Engineer (Electrical) Certificate No. 73954 JAMES BELLEVUE JOHNSON Date Signed Expires 9-30-27

PREPARED BY: WRIGHT ENGINEERING
DESIGNED BY: JHB
DRAWN BY: XAG
CHECKED BY: JHB
SCALE: AS NOTED
DATE: NOV 2025
JOB NO.: B614

TITLE: ELECTRICAL CONDUIT + WIRE TABLES I

JOB: TOWN OF JEROME WASTEWATER TREATMENT PLANT YAVAPAI CO. AZ

PREPARED BY:
PACE Advanced Water Engineering
8723 E. Via de Commercio, Suite 104, Scottsdale, CA 85258
p. (408) 991-3595 | www.pacewater.com

SHEET E2.4
76 OF 99 SHEETS

JOB NO. B614

ISSUED FOR BID

WRIGHT engineering corporation
ELECTRICAL ENGINEERING AND DESIGN
165 EAST CHILTON DRIVE
CHANDLER, ARIZONA 85225
PHONE: 480.497.5829
FAX: 480.497.5807
www.wrightengineering.us
Wright Project # 23319

CALL TWO WORKING DAYS BEFORE YOU DIG
602-263-1100
1-800-STAKE-IT
(OUTSIDE MARICOPA COUNTY)

H:\2025\01 Jerome WWTP\25-E.dwg, Tab: E2.4, by pcable on 11/04/25 at 2:56:48 PM

CONDUIT AND WIRE SCHEDULE FOR CONTROL

CONDUIT NO.	CONDUIT SIZE	POWER	GROUND	CONTROL	FROM	TO	REMARKS
GENERATOR/SES							
C101	3/4"		#14	(2)#14	AUTOMATIC TRANSFER SWITCH	GENERATOR	
C102	3/4"		#14	(2)#14	SBR CONTROL PANEL	AUTOMATIC TRANSFER SWITCH	
C103	3/4"		#14	(6)#14	SBR CONTROL PANEL	GENERATOR	
C104	3/4"		#14	(2)#14	GENERATOR	E-STOP	EST-01000
C105	2"	PULL ROPE			SBR CONTROL PANEL	MCC	
C106	1"	PULL ROPE			SEE SITE PLAN		SPARE
HEADWORKS STATION							
C200	3/4"		#14	(2)#14	SBR CONTROL PANEL	HEADWORKS CONTROL PANEL	
C201	3/4"		#14	(2)#14	HEADWORKS CONTROL PANEL	INFLUENT COARSE SCREEN	EST-03010A
C202	3/4"		#14	(2)#14	HEADWORKS CONTROL PANEL	INFLUENT COARSE SCREEN	EST-03010B
C203	3/4"		#14	(2)#14	HEADWORKS CONTROL PANEL	INFLUENT COARSE SCREEN CONVEYOR	EST-03010C
C204	3/4"		#14	(6)#14	HEADWORKS CONTROL PANEL	V-02020	ZSO-03023,ZSC-03023, HS-03023
C205	1.5"			(4) FACTORY CABLE	HEADWORKS CONTROL PANEL	CONDUIT BODY	LE-03031
C206	3/4"			FACTORY CABLE	HEADWORKS CONTROL PANEL	LEVEL SENSOR	LE-03031
C207	3/4"			FACTORY CABLE	HEADWORKS CONTROL PANEL	LEVEL SENSOR	LE-03032
C208	3/4"			FACTORY CABLE	HEADWORKS CONTROL PANEL	LEVEL SENSOR	LE-03033
C209	3/4"			FACTORY CABLE	HEADWORKS CONTROL PANEL	LEVEL SENSOR	LE-03034

TP=TWISTED SHIELDED PAIR

CONDUIT AND WIRE SCHEDULE FOR CONTROL

CONDUIT NO.	CONDUIT SIZE	POWER	GROUND	CONTROL	FROM	TO	REMARKS
SEQUENCING BATCH REACTOR							
C300	1"		#14	(6)#14	SBR CONTROL PANEL	MCP#1	MXR-05110
				(6)#14			PMP-05100
C350	1"		#14	(6)#14	SBR CONTROL PANEL	MCP#2	MXR-05112
				(6)#14			PMP-05101
C301	1"		#14	(4)#14	MCP#1	J-BOX C1	ME & TE-05110
				(4)#14			ME & TE-05100
C351	1"		#14	(4)#14	MCP#2	J-BOX C2	ME & TE-05112
				(4)#14			ME & TE-05101
C302	1"			FACTORY CABLE	J-BOX C1	MXR-05110	ME & TE-05110
C303	1"			FACTORY CABLE		PMP-05100	ME & TE-05100
C352	1"			FACTORY CABLE	J-BOX C2	MXR-05112	ME & TE-05112
C353	1"			FACTORY CABLE		PMP-05101	ME & TE-05101
C310	1.5"		#14	(8)#14	SBR CONTROL PANEL	J-BOX C1	M-05111
				(8)#14			PV-05120
				(2)#14			LSH-05131A
				(2)#14			LSL-05131B
				(4)#14			SBR AIR VALVE #1
C360	1.5"		#14	(8)#14		J-BOX C2	M-05113
				(8)#14			PV-05122
				(2)#14			LSH-05133A
				(2)#14			LSL-05133B
				(4)#14			SBR AIR VALVE #2
C311	1"			FACTORY CABLE	J-BOX C1	DECANTER #1	M-05111
C312	1"			(8)#14		SBR INFLUENT VALVE #1	PV-05120
C313				FACTORY CABLE		HIGH LEVEL FLOAT #3	LSH-05231
C314	1"			(2) FACTORY CABLE		CONDUIT BODY 1	LSH-05131A, LSH-05131B
C315	3/4"			FACTORY CABLE	CONDUIT BODY 1	HIGH LEVEL FLOAT #1	LSH-05131A
C316	3/4"			FACTORY CABLE		LOW LEVEL FLOAT #1	LSL-05131B
C317	3/4"			(4)#14	J-BOX C1	SBR AIR VALVE #1	
C361	1"			FACTORY CABLE	J-BOX C2	DECANTER #2	M-05113
C362	1"			(8)#14		SBR INFLUENT VALVE #2	PV-05122
C363				FACTORY CABLE		HIGH LEVEL FLOAT #4	LSH-05233
C364	1"			(2) FACTORY CABLE		CONDUIT BODY 2	LSH-05133A, LSH-05133B
C365	3/4"			FACTORY CABLE	CONDUIT BODY 2	HIGH LEVEL FLOAT #2	LSH-05133A
C366	3/4"			FACTORY CABLE		LOW LEVEL FLOAT #2	LSL-05133B
C367	3/4"			(4)#14	J-BOX C2	SBR AIR VALVE #2	
C320	1"			#16 TP	SBR CONTROL PANEL	J-BOX C1	LE-05130
				#16 TP			BFV-05121
				#16 TP			LE-05230
				#16 TP			AT-05160A
C370	1"			#16 TP	SBR CONTROL PANEL	J-BOX C2	LE-05132
				#16 TP			BFV-05123
				#16 TP			LE-05232
				#16 TP			AT-05161A
C321	3/4"			FACTORY CABLE	J-BOX C1	LEVEL SENSOR #1	LE-05130
C322	3/4"			#16 TP		DECANTER VALVE	BFV-05121
C323				FACTORY CABLE		LEVEL SENSOR #3	LE-05230
C324	3/4"			#16 TP		D.O. ANALYZER	AT-05160A
C325				FACTORY CABLE	D.O. ANALYZER	D.O. SENSOR	AE-05160B
C371	3/4"			FACTORY CABLE	J-BOX C2	LEVEL SENSOR #2	LE-05132
C372	3/4"			#16 TP		DECANTER VALVE	BFV-05123
C373				FACTORY CABLE		LEVEL SENSOR #4	LE-05232
C374	3/4"			#16 TP		D.O. ANALYZER	AT-05161A
C375				FACTORY CABLE	D.O. ANALYZER	D.O. SENSOR	AE-05161B

TP=TWISTED SHIELDED PAIR

CONDUIT AND WIRE SCHEDULE FOR CONTROL

CONDUIT NO.	CONDUIT SIZE	POWER	GROUND	CONTROL	FROM	TO	REMARKS
CHLORINE CONTACT							
C400	3/4"			#16TP	SBR CONTROL PANEL	FLOW METER	FM-06240 CHLORINE CONTACT
C401	1"			(2)#16TP	SBR CONTROL PANEL	V-02420	ZSO-06221, ZSC-06221, HS-06221 CHLORINE CONTACT
BLOWER ROOM							
C501			#14	(4)#14, (2)#16TP, CAT6	SBR CONTROL PANEL	BLOWER VFD BLR-04310	
C502			#14	(4)#14, (2)#16TP, CAT6		BLOWER VFD BLR-04311	
C503			#14	(4)#14, (2)#16TP, CAT6		BLOWER VFD BLR-04312	
C504			#14	(4)#14, (2)#16TP, CAT6		BLOWER VFD BLR-04313	
C511	3/4"		#14	(2)#14	BLOWER VFD BLR-04310	MOTOR RTD	TS-04310
C512	3/4"		#14	(2)#14	BLOWER VFD BLR-04311	MOTOR RTD	TS-04311
C513	3/4"		#14	(2)#14	BLOWER VFD BLR-04312	MOTOR RTD	TS-04312
C514	3/4"		#14	(2)#14	BLOWER VFD BLR-04313	MOTOR RTD	TS-04313
C520	1"		#14	(16)#14	SBR CONTROL PANEL	J-BOX	TT-04310, TT-04311, TT-04312, TT-04313
C530	1"			(4)#16TP			PT-04310, PT-04311, PT-04312, PT-04313
C521	3/4"		#14	(2)#14	J-BOX	THERMOSTAT AIR LINE BLOWER BLR-04310	TT-04310
C522	3/4"		#14	(2)#14		THERMOSTAT AIR LINE BLOWER BLR-04311	TT-04311
C523	3/4"		#14	(2)#14		THERMOSTAT AIR LINE BLOWER BLR-04312	TT-04312
C524	3/4"		#14	(2)#14		THERMOSTAT AIR LINE BLOWER BLR-04313	TT-04313
C531	3/4"			#16TP	J-BOX	PRESSURE TRANSDUCER AIR LINE BLOWER BLR-04310	PT-04310, PT-04311, PT-04312, PT-04313
C532	3/4"			#16TP		PRESSURE TRANSDUCER AIR LINE BLOWER BLR-04311	PT-04310, PT-04311, PT-04312, PT-04313
C533	3/4"			#16TP		PRESSURE TRANSDUCER AIR LINE BLOWER BLR-04312	PT-04310, PT-04311, PT-04312, PT-04313
C534	3/4"			#16TP		PRESSURE TRANSDUCER AIR LINE BLOWER BLR-04313	PT-04310, PT-04311, PT-04312, PT-04313
DEWATERING							
C600	1"		#14	(4)#14	SBR CONTROL PANEL	SLUDGE BAGGING SYSTEM CONTROL PANEL	
C601	3/4"		#14	(2)#14	SLUDGE BAGGING SYSTEM CONTROL PANEL	DEWATERING PUMP	PMP-08400, VERIFY CABLE TYPE WITH VENDOR
C602	3/4"		#14	(2)#14	SLUDGE BAGGING SYSTEM CONTROL PANEL	DRY POLYMER MIXING UNIT	MXR-08410, VERIFY CABLE TYPE WITH VENDOR
C603	3/4"		#14	(2)#14	SLUDGE BAGGING SYSTEM CONTROL PANEL	INFLUENT PLUG VALVE	V-02420, VERIFY CABLE TYPE WITH VENDOR
C604	3/4"		#14	(2)#14	SLUDGE BAGGING SYSTEM CONTROL PANEL	POLYMER PUMP	PMP-08401, VERIFY CABLE TYPE WITH VENDOR
DRYING BED LIFT STATION							
C700	1"		#14	(4)#14	SBR CONTROL PANEL	DRYING BED LIFT STATION CONTROL PANEL	
C701	1"		FACTORY CABLE		DRYING BED LIFT STATION CONTROL PANEL	PMP-07400A	
C702	1"		FACTORY CABLE		DRYING BED LIFT STATION CONTROL PANEL	PMP-07400B	
C706	1"		(3) FACTORY CABLE		DRYING BED LIFT STATION CONTROL PANEL	LEVEL FLOATS	LSHH-07430A, LSH-07430B, LSL-07430C
OVERFLOW LIFT STATION							
C801	1"		#14	(4)#14	SBR CONTROL PANEL	DRYING BED LIFT STATION CONTROL PANEL	
C802	1"		FACTORY CABLE		DRYING BED LIFT STATION CONTROL PANEL	PMP-07401	
C803	1"		(2) FACTORY CABLE		DRYING BED LIFT STATION CONTROL PANEL	LEVEL FLOATS	LSHH-07431A, LSL-07431B

TP=TWISTED SHIELDED PAIR

WRIGHT engineering corporation
ELECTRICAL ENGINEERING AND DESIGN
165 EAST CHILTON DRIVE
CHANDLER, ARIZONA 85225
PHONE: 480.497.5829
FAX: 480.497.5807
www.wrightengineering.us
Wright Project # 23319

CALL TWO WORKING DAYS BEFORE YOU DIG
602-263-1100
1-800-STAKE-IT
(OUTSIDE MARICOPA COUNTY)

ISSUED FOR BID

NO	BY	DATE	REVISIONS	DATE	APP.

Registered Professional Engineer (Electrical) Certificate No. 73954 JAMES BILLEDEAU 3-31-27 Expires 9-30-27

PREPARED BY: WRIGHT ENGINEERING
DESIGNED BY: JHB
DRAWN BY: XAG
CHECKED BY: JHB
SCALE: AS NOTED
DATE: NOV 2025
JOB NO.: B614

TITLE: ELECTRICAL CONDUIT + WIRE TABLES II

JOB: TOWN OF JEROME WASTEWATER TREATMENT PLANT YAVAPAI CO. AZ

THESE DRAWINGS ARE THE PROPERTY OF P.A.C.E. AND SHALL NOT BE REPRODUCED IN ANY MANNER NOR BE USED FOR CONSTRUCTION UNLESS STAMPED "ISSUED FOR CONSTRUCTION".

PREPARED BY:
PACE
Advanced Water Engineering
8723 E. VIA de VENTURA, SUITE 230 | SCOTTSDALE, CA 85258
P: (480) 991-3955 | www.pacewater.com

SHEET
E2.5
77 OF 99 SHEETS

JOB NO. B614

C:\DOCS\Projects\WWTP\23319 E Eng - Tab\ E2.5 - Ingenieria en Control & Detalles.dwg

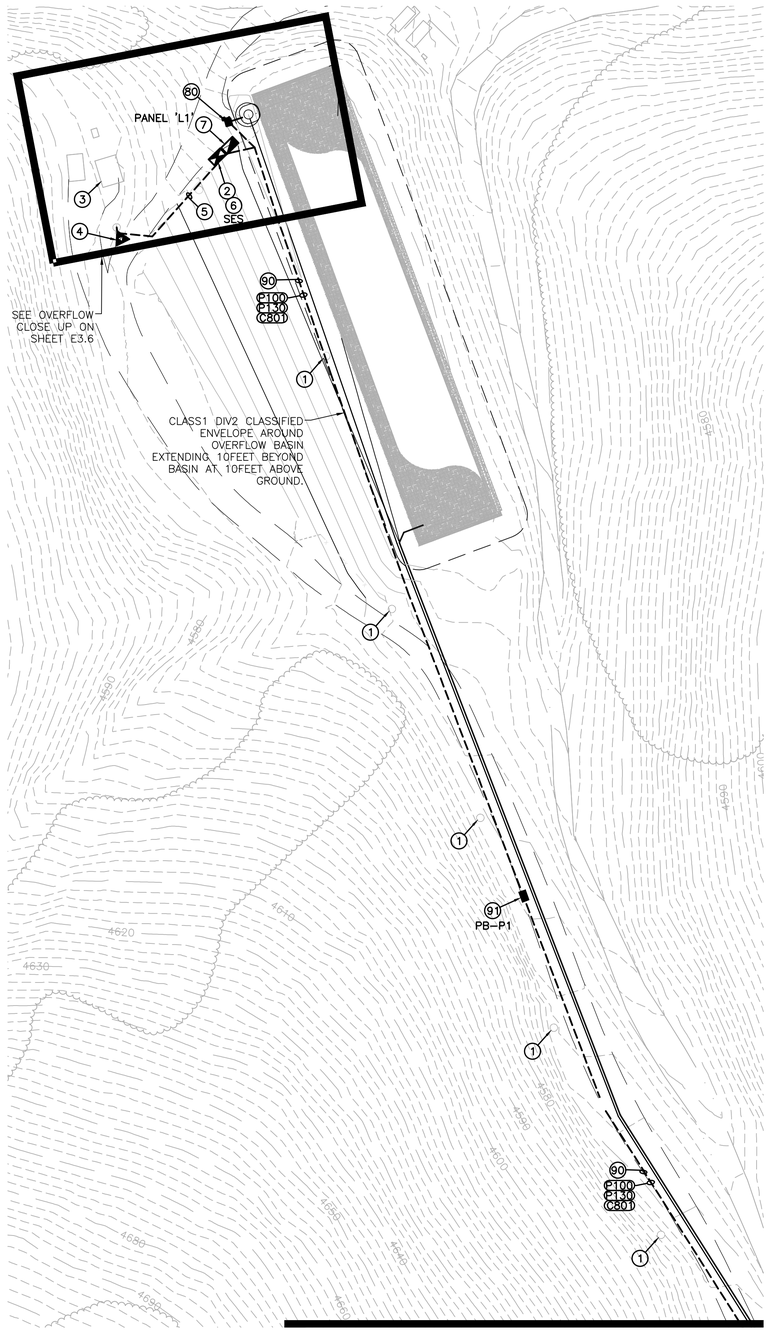

MATCHLINE 'A' SEE ABOVE RIGHT

MATCHLINE 'A' BELOW LEFT

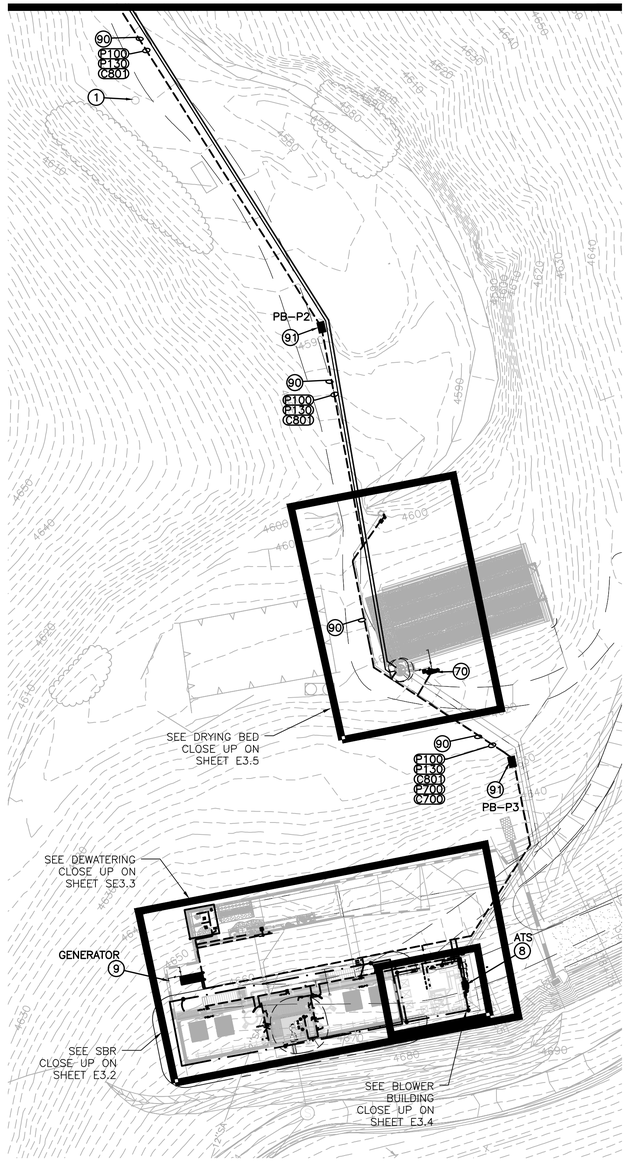

CONSTRUCTION NOTES

1. REMOVE ALL EXISTING CUSTOMER OWNED OVERHEAD ELECTRICAL AND POWER POLE AND DISPOSE OF PROPERLY. COORDINATE WITH OWNER FOR SCHEDULING.
2. REMOVE EXISTING SES AND PANEL AND DISPOSE OF PROPERLY. COORDINATE DISCONNECTION OF THE METER AND SECONDARY CONDUCTORS WITH APS
3. DE-ENERGIZE EXISTING LAB BUILDING UPON COMPLETION OF CONSTRUCTION OF THE NEW LAB. REMOVE ALL EXISTING CONDUCTORS AND ELECTRICAL EQUIPMENT AND DISPOSE OF PROPERLY. COORDINATE ALL WORK WITH OWNER AND POWER COMPANY PRIOR TO DE-ENERGIZATION.
4. COORDINATE WITH APS TO REPLACE THE EXISTING POLE MOUNTED SINGLE PHASE TRANSFORMER. APS TO INSTALL THREE PHASE TRANSFORMERS. CONTRACTOR SHALL VERIFY LOCATION OF NEW TRANSFORMER WITH APS. APS PLANS WILL DETERMINE EXACT LOCATION AND TAKE PRECEDENCE OVER THESE DRAWINGS. COORDINATE ALL WORK WITH APS.
5. APS SERVICE LINE. TRENCH AND INSTALL CONDUIT PER APS SPECIFICATIONS. POWER COMPANY PLANS WILL DETERMINE EXACT LOCATION OF CONDUIT AND TAKE PRECEDENCE OVER THESE DRAWINGS.
6. SES, 400 AMP, 277/480V, 3ø, 4W, SEE DETAIL 1 ON E4.1.
7. MINI-POWER ZONE AND PANELBOARD. SEE DETAIL 1 ON E4.1.
8. ATS 400A 277/480V, 3ø, 4W, SEE DETAIL 2 ON SHEET E4.1.
9. GENERATOR 125KW, 277/480V, 3ø, 4W, SEE DETAIL 1 ON E4.3.
70. 30A DRYING BED LIFT PUMP CONTROL PANEL, 480V, 3ø, 4W. ELECTRICAL CONTRACTOR SHALL MAKE ALL POWER AND CONTROL CONNECTIONS PER THESE PLANS AND SPECIFICATIONS AND THE MANUFACTURERS REQUIREMENTS. SEE DETAIL 1 ON SHEET E4.4.
80. OVERFLOW LIFT PUMP CONTROL PANEL, BY VENDOR. 240V, 1ø, 3W. ELECTRICAL CONTRACTOR SHALL MAKE ALL POWER AND CONTROL CONNECTIONS PER THESE PLANS AND SPECIFICATIONS AND THE MANUFACTURERS REQUIREMENTS. SEE DETAIL 1 ON SHEET E4.4.
90. JOINT TRENCH WITH WATER LINES. MAINTAIN 24-INCH SEPARATION. SEE DETAIL 3 ON SHEET E4.3.
91. STACKED #7 CONCRETE PULL BOX. INSTALL AS SHOWN OR AS NEEDED IF CONDUIT RUNS WILL EXCEED 360 DEGREE OF BENDS OR THE LENGTH EXCEEDS 400 FEET. INSTALL 1 FOR POWER AND 1 FOR CONTROL. SEE DETAIL 5 ON SHEET E4.3.

LEGEND

- PROPOSED 3ø POWER COMPANY TRANSFORMER
- SES 400A 277/480V 3ø 4W
- TRANSFORMER 480V-120/240V
- PANEL 120/240V 1ø 3W
- CONTROL PANEL
- EYS SEALS, CLASS 1 DIVISION 1
- ELECTRICAL SWITCH
- 120V GFCI RECEPTACLE
- 120V GFCI QUADRUPLEX RECEPTACLE
- ELECTRICAL AND COMMUNICATION PULL BOXES
- NEW PULL BOX
- NON FUSED NEMA 4X DISCONNECT
- UNDERGROUND ELECTRICAL CONDUIT
- ABOVE GROUND ELECTRICAL CONDUIT
- FLEXIBLE METALLIC CONDUIT
- GROUNDING ELECTRODE CONDUCTOR
- GROUND ROD WITH INSPECTION WELL. INSPECTION WELL IS ONLY FOR THE FIRST GROUND ROD CONNECTED TO

PROPOSED SITE PLAN ELECTRICAL

NORTH

GRAPHIC SCALE
30 15 0 15 30 60
1 INCH = 30 FEET

WRIGHT engineering corporation
ELECTRICAL ENGINEERING AND DESIGN
165 EAST CHILTON DRIVE
CHANDLER, ARIZONA 85225
PHONE: 480.497.5829
FAX: 480.497.5807
www.wrightengineering.us
Wright Project # 23319

CALL TWO WORKING DAYS BEFORE YOU DIG
602-263-1100
1-800-STAKE-IT
(OUTSIDE MARICOPA COUNTY)

NO	BY	DATE	REVISIONS	DATE	APP.

Registered Professional Engineer (Electrical) Certificate No. 73954 JASON BILLEDEAU Date Signed 11-24-25 Expires 9-30-27

PREPARED BY: WRIGHT ENGINEERING
DESIGNED BY: JHB
DRAWN BY: XAG
CHECKED BY: JHB
SCALE: AS NOTED
DATE: NOV 2025
JOB NO. B614

TITLE
ELECTRICAL
PROPOSED SITE PLAN

JOB
TOWN OF JEROME
WASTEWATER
TREATMENT PLANT
YAVAPAI CO. AZ

ISSUED FOR BID

PREPARED BY:
PACE
Advanced Water Engineering
8723 E. VIA de COMMERCIO, SUITE 1-A, SCOTTSDALE, CA 85258
P: (480) 991-3595 | www.pacewater.com

SHEET
E3.1
78 OF 99 SHEETS
JOB NO. B614

THESE DRAWINGS ARE THE PROPERTY OF P.A.C.E. AND SHALL NOT BE REPRODUCED IN ANY MANNER NOR BE USED FOR CONSTRUCTION UNLESS STAMPED "ISSUED FOR CONSTRUCTION".

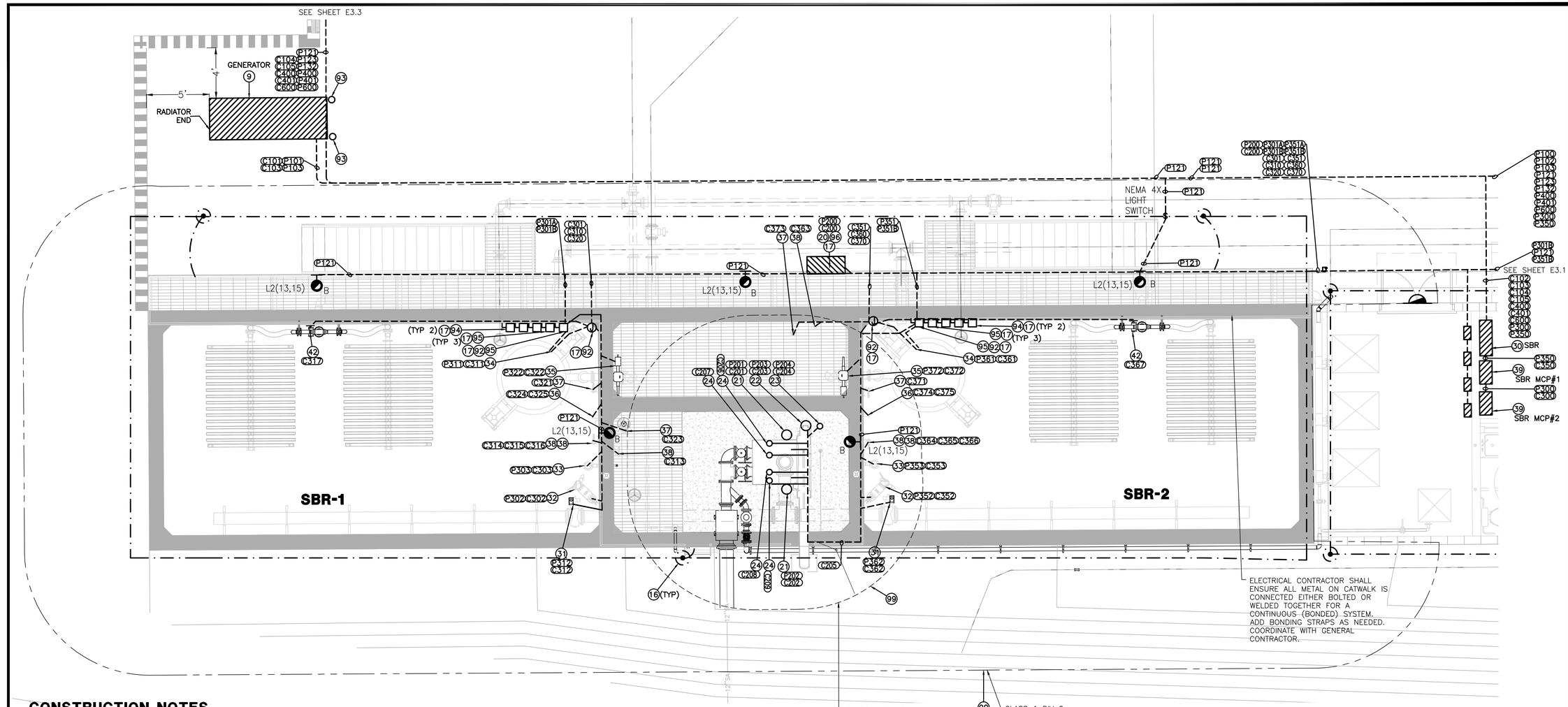
SEE SHEET E3.3
GENERATOR
9
5'
RADIATOR END
93
C101 P101
C103 P103
P121
C104 P123
C105 P142
C200 P400
C400 P420
C600 P600
NEMA 4X LIGHT SWITCH
SEE SHEET E3.1
C100
C102
C103
C104
C105
C106
C107
C108
C109
C110
C111
C112
C113
C114
C115
C116
C117
C118
C119
C120
C121
C122
C123
C124
C125
C126
C127
C128
C129
C130
C131
C132
C133
C134
C135
C136
C137
C138
C139
C140
C141

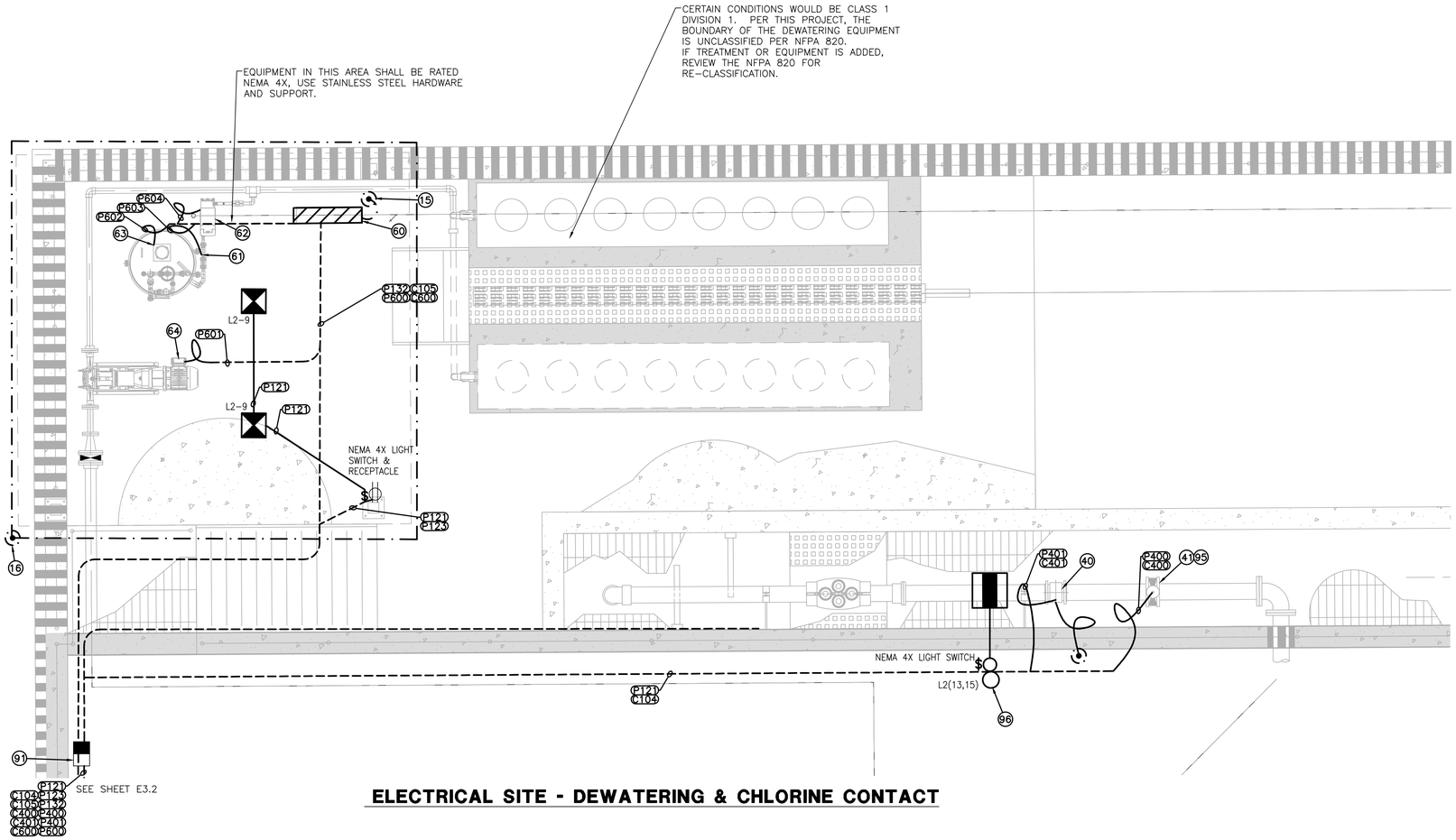

ELECTRICAL SITE - DEWATERING & CHLORINE CONTACT

CONSTRUCTION NOTES

(15) GROUNDING ELECTRODE CONDUCTORS, GROUND ROD, AND INSPECTION WELL FOR ONLY THE FIRST GROUND ROD, PER SINGLE LINE DIAGRAMS AND DETAILS ON SHEET E4.6.

(16) LIGHTNING PROTECTION SYSTEM, PER NFPA AND DETAIL 6 ON SHEET E4.6

(40) SBR EFFLUENT VALVE. ELECTRICAL CONTRACTOR SHALL MAKE ALL POWER AND CONTROL CONNECTIONS PER THESE PLANS AND SPECIFICATIONS AND THE MANUFACTURERS REQUIREMENTS.

(41) FLOW METER. ELECTRICAL CONTRACTOR SHALL MAKE ALL POWER AND CONTROL CONNECTIONS PER THESE PLANS AND SPECIFICATIONS AND THE MANUFACTURERS REQUIREMENTS.

(60) 20A SLUDGE BAGGING SYSTEM CONTROL PANEL, BY VENDOR. ELECTRICAL CONTRACTOR SHALL MAKE ALL POWER AND CONTROL CONNECTIONS PER THESE PLANS AND SPECIFICATIONS AND THE MANUFACTURERS REQUIREMENTS.

(61) POTABLE WATER VALVE. ELECTRICAL CONTRACTOR SHALL MAKE ALL POWER AND CONTROL CONNECTIONS PER THESE PLANS AND SPECIFICATIONS AND THE MANUFACTURERS REQUIREMENTS.

(62) POLYMER METERING PUMP. ELECTRICAL CONTRACTOR SHALL MAKE ALL POWER AND CONTROL CONNECTIONS PER THESE PLANS AND SPECIFICATIONS AND THE MANUFACTURERS REQUIREMENTS.

(63) DRY POLYMER MIXER. ELECTRICAL CONTRACTOR SHALL MAKE ALL POWER AND CONTROL CONNECTIONS PER THESE PLANS AND SPECIFICATIONS AND THE MANUFACTURERS REQUIREMENTS.

(64) DEWATERING FEED PUMP. ELECTRICAL CONTRACTOR SHALL MAKE ALL POWER AND CONTROL CONNECTIONS PER THESE PLANS AND SPECIFICATIONS AND THE MANUFACTURERS REQUIREMENTS.

(91) STACKED #7 CONCRETE PULL BOX. INSTALL AS SHOWN OR AS NEEDED IF CONDUIT RUNS WILL EXCEED 360 DEGREE OF BENDS OR THE LENGTH EXCEEDS 400 FEET. INSTALL 1 FOR POWER AND 1 FOR CONTROL. SEE DETAIL 5 ON SHEET E4.3.

(95) ROTARY TYPE DISCONNECT, NEMA 4X FOR OUTDOOR AND CLASS 1 DIV 1 WITHIN CLASSIFIED BOUNDARY. IF LOCATION IS ABOVE BOUNDARY, NEMA 4X WITH CLASSIFIED SEAL OFFS IS ACCEPTABLE. PROVIDE PERMANENT LABEL SUITABLE FOR CORROSIVE ENVIRONMENTS AND UV RESISTANT. MATCH LABEL NAMING CONVENTION WITH P&ID. SEE DETAIL 5 ON SHEET E4.2 & SEE DETAIL 1 ON SHEET E4.4.

(96) E-STOP, NEMA 4X FOR OUTDOOR AND CLASS 1 DIV 1 WITHIN CLASSIFIED BOUNDARY. IF LOCATION IS ABOVE BOUNDARY, NEMA 4X WITH CLASSIFIED SEAL OFFS IS ACCEPTABLE. PROVIDE PERMANENT LABEL SUITABLE FOR CORROSIVE ENVIRONMENTS AND UV RESISTANT. MATCH LABEL NAMING CONVENTION WITH P&ID. SEE DETAIL 5 ON SHEET E4.2.

LEGEND

- PROPOSED 3ø POWER COMPANY TRANSFORMER
- SES 400A 277/480V 3ø 4W
- TRANSFORMER 480V-120/240V
- PANEL 120/240V 1ø 3W
- CONTROL PANEL
- EYS SEALS, CLASS 1 DIVISION 1
- ELECTRICAL SWITCH
- 120V GFCI RECEPTACLE
- 120V GFCI QUADRUPLEX RECEPTACLE
- ELECTRICAL AND COMMUNICATION PULL BOXES
- NEW PULL BOX
- NON FUSED NEMA 4X DISCONNECT
- UNDERGROUND ELECTRICAL CONDUIT
- ABOVE GROUND ELECTRICAL CONDUIT
- FLEXIBLE METALLIC CONDUIT
- GROUNDING ELECTRODE CONDUCTOR
- GROUND ROD WITH INSPECTION WELL. INSPECTION WELL IS ONLY FOR THE FIRST GROUND ROD CONNECTED TO THE GROUNDING ELECTRODE CONDUCTOR.

GRAPHIC SCALE
2 1 0 1 2 4
1 INCH = 2 FEET
NORTH

WRIGHT engineering corporation
ELECTRICAL ENGINEERING AND DESIGN
165 EAST CHILTON DRIVE
CHANDLER, ARIZONA 85225
PHONE: 480.497.5829
FAX: 480.497.5807
www.wrightengineering.us
Wright Project # 23319

CALL TWO WORKING DAYS BEFORE YOU DIG
602-263-1100
1-800-STAKE-IT
(OUTSIDE MARICOPA COUNTY)

NO	BY	DATE	REVISIONS	DATE	APP.

Registered Professional Engineer (Electrical)
Certificate No. 73954
JAMES BILLETDEAUX
Date Signed
Expires 9-30-27

PREPARED BY: WRIGHT ENGINEERING
DESIGNED BY: JHB
DRAWN BY: XAG
CHECKED BY: JHB
DATE: NOV 2025
JOB NO.: B614
SCALE: AS NOTED

TITLE: ELECTRICAL DEWATERING PAD

JOB: TOWN OF JEROME WASTEWATER TREATMENT PLANT
YAVAPAI CO. AZ

THESE DRAWINGS ARE THE PROPERTY OF P.A.C.E. AND SHALL NOT BE REPRODUCED IN ANY MANNER NOR BE USED FOR CONSTRUCTION UNLESS STAMPED "ISSUED FOR CONSTRUCTION".

ISSUED FOR BID

PREPARED BY:
PACE
Advanced Water Engineering
8723 E. Via de Commercio, Suite 104, SCOTTSDALE, CA 85258
P: (480) 991-3395 | www.pacewater.com

SHEET
E3.3
80 OF 99 SHEETS

JOB NO. B614

12/2025 10:19am Jerome WWTP\2025 E-Dwg - Rev. E3.3 - by jaredb on 11/26/25 at 4:56:41 PM

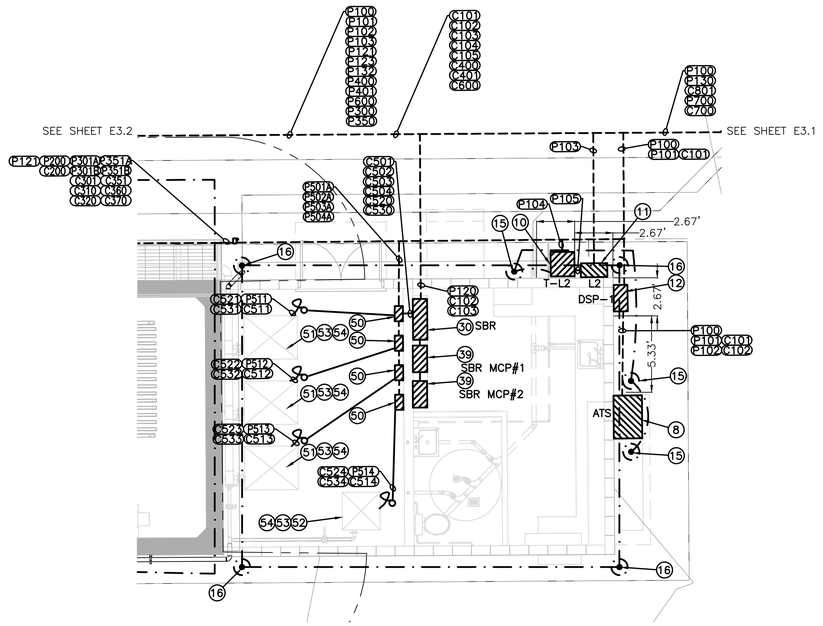

OPS BLOWER ELECTRICAL

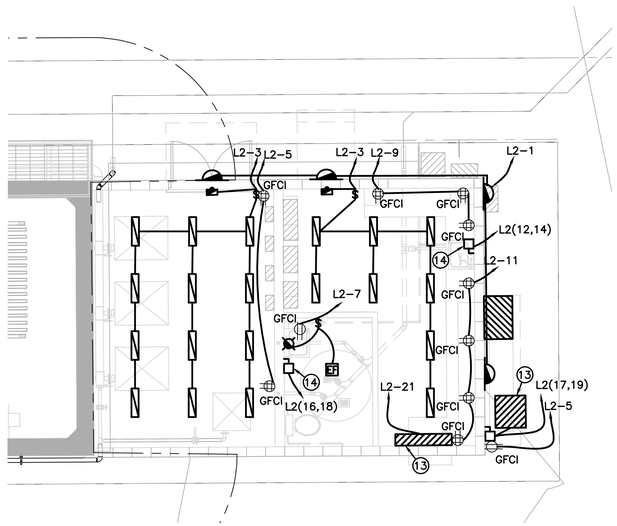

OPS BLOWER LIGHTING & POWER

CONSTRUCTION NOTES

8. ATS 400A 277/480V, 3ø, 4W, SEE DETAIL 2 ON SHEET E4.1.
10. TRANSFORMER 50KVA 480V – 120/240V 1ø, SEE DETAIL 2 ON SHEET E4.1.
11. PANELBOARD, 120/240V, 1ø, 3W, SEE DETAIL 2 ON E4.1.
12. DISTRIBUTION PANEL DSP-1 400A 277/480V, 3ø, 4W, SEE DETAIL 2 ON SHEET E4.1.
13. ELECTRICAL CONTRACTOR SHALL INSTALL POWER FEED TO MINI SPLIT AIR CONDITIONER AND HEAT PUMP & MAKE ALL 240V CONNECTIONS.
14. TANKLESS WATER HEATER & DISCONENCT. ELECTRICAL CONTRACTOR SHALL MAKE ALL POWER AND CONTROL CONNECTIONS PER THESE PLANS AND SPECIFICATIONS AND THE MANUFACTURERS REQUIREMENTS.
15. GROUNDING ELECTRODE CONDUCTORS, GROUND ROD, AND INSPECTION WELL FOR ONLY THE FIRST GROUND ROD, PER SINGLE LINE DIAGRAMS AND DETAILS ON SHEET E4.6.
16. LIGHTNING PROTECTION SYSTEM, PER NFPA AND DETAIL 6 ON SHEET E4.6
30. SBR PANEL BY VENDOR, ELECTRICAL CONTRACTOR SHALL MAKE ALL POWER AND CONTROL CONNECTIONS PER THESE PLANS AND SPECIFICATIONS AND THE MANUFACTURERS REQUIREMENTS.
50. VARIABLE FREQUENCY DRIVE. ELECTRICAL CONTRACTOR SHALL MAKE ALL POWER AND CONTROL CONNECTIONS PER THESE PLANS AND SPECIFICATIONS AND THE MANUFACTURERS REQUIREMENTS.
51. SBR AERATION BLOWER WITH INTEGRAL DISCONNECT. ELECTRICAL CONTRACTOR SHALL MAKE ALL POWER AND CONTROL CONNECTIONS PER THESE PLANS AND SPECIFICATIONS AND THE MANUFACTURERS REQUIREMENTS.
52. DIGESTER AERATION BLOWER WITH INTEGRAL DISCONNECT. ELECTRICAL CONTRACTOR SHALL MAKE ALL POWER AND CONTROL CONNECTIONS PER THESE PLANS AND SPECIFICATIONS AND THE MANUFACTURERS REQUIREMENTS.
53. PRESSURE TRANSDUCER. ELECTRICAL CONTRACTOR SHALL MAKE ALL POWER AND CONTROL CONNECTIONS PER THESE PLANS AND SPECIFICATIONS AND THE MANUFACTURERS REQUIREMENTS.
54. TEMPERATURE TRANSDUCER. ELECTRICAL CONTRACTOR SHALL MAKE ALL POWER AND CONTROL CONNECTIONS PER THESE PLANS AND SPECIFICATIONS AND THE MANUFACTURERS REQUIREMENTS.

LEGEND

- PROPOSED 3ø POWER COMPANY TRANSFORMER
- SES 400A 277/480V 3ø 4W
- TRANSFORMER 480V–120/240V
- PANEL 120/240V 1ø 3W
- CONTROL PANEL
- EYS SEALS, CLASS 1 DIVISION 1
- ELECTRICAL SWITCH
- 120V GFCI RECEPTACLE
- 120V GFCI QUADRUPLEX RECEPTACLE
- ELECTRICAL AND COMMUNICATION PULL BOXES
- NEW PULL BOX
- NON FUSED NEMA 4X DISCONNECT
- UNDERGROUND ELECTRICAL CONDUIT
- ABOVE GROUND ELECTRICAL CONDUIT
- FLEXIBLE METALLIC CONDUIT
- GROUNDING ELECTRODE CONDUCTOR
- GROUND ROD WITH INSPECTION WELL. INSPECTION WELL IS ONLY FOR THE FIRST GROUND ROD CONNECTED TO

GRAPHIC SCALE
5 2.5 0 2.5 5 10
1 INCH = 5 FEET
NORTH

WRIGHT engineering corporation
ELECTRICAL ENGINEERING AND DESIGN
165 EAST CHILTON DRIVE
CHANDLER, ARIZONA 85225
PHONE: 480.497.5829
FAX: 480.497.5807
www.wrightengineering.us
Wright Project # 23319

CALL TWO WORKING DAYS BEFORE YOU DIG
602-263-1100
1-800-STAKE-IT
(OUTSIDE MARICOPA COUNTY)

NO	BY	DATE	REVISIONS	DATE	APP.
1					
2					
3					
4					
5					

Registered Professional Engineer (Electrical) Certificate No. 73954 JAMES RELLETT DAY Date Signed 11-24-25 Expires 9-30-27

PREPARED BY: WRIGHT ENGINEERING
DESIGNED BY: JHB
DRAWN BY: XAG
CHECKED BY: JHB
DATE: NOV 2025
JOB NO.: B614
SCALE: AS NOTED

THESE DRAWINGS ARE THE PROPERTY OF P.A.C.E. AND SHALL NOT BE REPRODUCED IN ANY MANNER NOR BE USED FOR CONSTRUCTION UNLESS STAMPED "ISSUED FOR CONSTRUCTION".

TITLE: ELECTRICAL BLOWER OPS

JOB: TOWN OF JEROME WASTEWATER TREATMENT PLANT YAVAPAI CO. AZ

ISSUED FOR BID

PREPARED BY:
PACE
Advanced Water Engineering
8723 E VIA de VENTURA, SUITE A200, SCOTTSDALE, CA 85258
P: (480) 991-3955 | www.pacewater.com

SHEET E3.4
81 OF 99 SHEETS

JOB NO. B614

C:\2025\01b_Jerome WWTP\23319-E.rvt, Tab: E3.4, by jacob on 11/25/25 at 08:43 PM

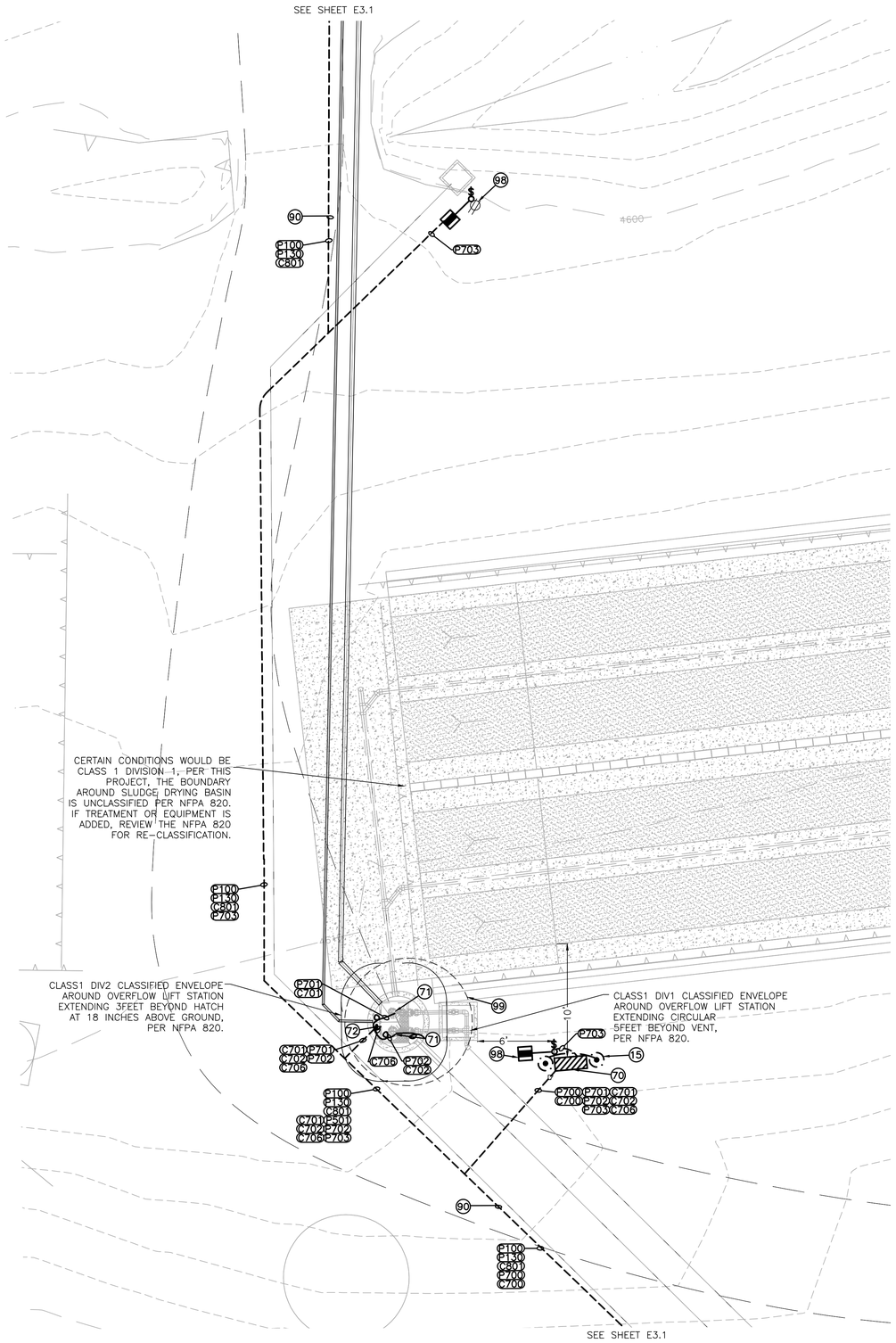

DRYING BED LIFT STATION ELECTRICAL

CONSTRUCTION NOTES

(15) GROUNDING ELECTRODE CONDUCTORS, GROUND ROD, AND INSPECTION WELL FOR ONLY THE FIRST GROUND ROD. PER SINGLE LINE DIAGRAMS AND DETAILS ON SHEET E4.6.

(70) 30A DRYING BED LIFT PUMP CONTROL PANEL, 480V, 3ø, 4W. ELECTRICAL CONTRACTOR SHALL MAKE ALL POWER AND CONTROL CONNECTIONS PER THESE PLANS AND SPECIFICATIONS AND THE MANUFACTURERS REQUIREMENTS. SEE DETAIL 1 ON SHEET E4.4.

(71) DRYING BED LIFT PUMP. ELECTRICAL CONTRACTOR SHALL MAKE ALL POWER AND CONTROL CONNECTIONS PER THESE PLANS AND SPECIFICATIONS AND THE MANUFACTURERS REQUIREMENTS. SEE DETAIL 4 ON SHEET E4.5.

(72) LEVEL FLOAT. ELECTRICAL CONTRACTOR SHALL MAKE ALL POWER AND CONTROL CONNECTIONS PER THESE PLANS AND SPECIFICATIONS AND THE MANUFACTURERS REQUIREMENTS. SEE DETAIL 4 ON SHEET E4.5.

(90) JOINT TRENCH WITH WATER LINES. MAINTAIN 24-INCH SEPARATION. SEE DETAIL 3 ON SHEET E4.3.

(98) 20A 120V GFCI DUPLEX RECEPTACLE WITH METAL WEATHERPROOF WHILE-IN-USE AND LOCKABLE COVER INSTALLED ONTO LIGHT POLE. SEE DETAIL 2 ON SHEET E4.5.

(99) CLASSIFIED AREA VERIFY BOUNDARY WITH THE NFPA. INSTALL ANY PANELS, DISCONNECTS, SPLICES, ARC MAKING EQUIPMENT OUT OF THE BOUNDARY, WHERE NOT POSSIBLE THEN INSTALL CLASS 1 DIV 1 LISTED EQUIPMENT. ALL CONDUIT WITHIN BOUNDARY SHALL BE CLASS 1 DIV 1 OR 2 RATED AS REQUIRED BY THE BOUNDARY. USE PVC COATED THREADED RMC CONDUIT, INSTALL STAINLESS STEEL 316 ENCLOSURES, HARDWARE AND EQUIPMENT WITHIN 10 FEET OF THE BOUNDARY. INSTALL CLASSIFIED SEAL OFFS WITHIN 10 FEET OF THE BOUNDARY, AT A PANEL OR JUNCTION BOX IS PREFERRED.

LEGEND

- PROPOSED 3ø POWER COMPANY TRANSFORMER
- SES 400A 277/480V 3ø 4W
- TRANSFORMER 480V-120/240V
- PANEL 120/240V 1ø 3W
- CONTROL PANEL
- EYS SEALS, CLASS 1 DIVISION 1
- ELECTRICAL SWITCH
- 120V GFCI RECEPTACLE
- 120V GFCI QUADRUPLEX RECEPTACLE
- ELECTRICAL AND COMMUNICATION PULL BOXES
- NEW PULL BOX
- NON FUSED NEMA 4X DISCONNECT
- UNDERGROUND ELECTRICAL CONDUIT
- ABOVE GROUND ELECTRICAL CONDUIT
- FLEXIBLE METALLIC CONDUIT
- GROUNDING ELECTRODE CONDUCTOR
- GROUND ROD WITH INSPECTION WELL. INSPECTION WELL IS ONLY FOR THE FIRST GROUND ROD CONNECTED TO

GRAPHIC SCALE
5 2.5 0 2.5 5 10
1 INCH = 5 FEET
NORTH

WRIGHT engineering corporation
ELECTRICAL ENGINEERING AND DESIGN
165 EAST CHILTON DRIVE
CHANDLER, ARIZONA 85225
PHONE: 480.497.5829
FAX: 480.497.5807
www.wrightengineering.us
Wright Project # 23319

CALL TWO WORKING DAYS BEFORE YOU DIG
602-263-1100
1-800-STAKE-IT
(OUTSIDE MARICOPA COUNTY)

NO	BY	DATE	REVISIONS	DATE	APP.

Registered Professional Engineer (Retired)
Certificate No. 73954
JASON BILLEDEAU
Date Signed 9-30-25
Expires 9-30-27

PREPARED BY: WRIGHT ENGINEERING
DESIGNED BY: JHB
DRAWN BY: XAG
CHECKED BY: JHB
SCALE: AS NOTED
DATE: NOV 2025
JOB NO.: B614

THESE DRAWINGS ARE THE PROPERTY OF P.A.C.E. AND SHALL NOT BE REPRODUCED IN ANY MANNER NOR BE USED FOR CONSTRUCTION UNLESS STAMPED "ISSUED FOR CONSTRUCTION".

TITLE
ELECTRICAL
DRYING BED LIFT STATION

JOB
TOWN OF JEROME
WASTEWATER
TREATMENT PLANT
YAVAPAI CO. AZ

ISSUED FOR BID

PREPARED BY:
PACE
Advanced Water Engineering
8723 E. Via de Commercio, Suite 1-144, Scottsdale, CA 85258
P: (480) 991-3595 | www.pacewater.com

SHEET
E3.5
82 OF 99 SHEETS

JOB NO. B614

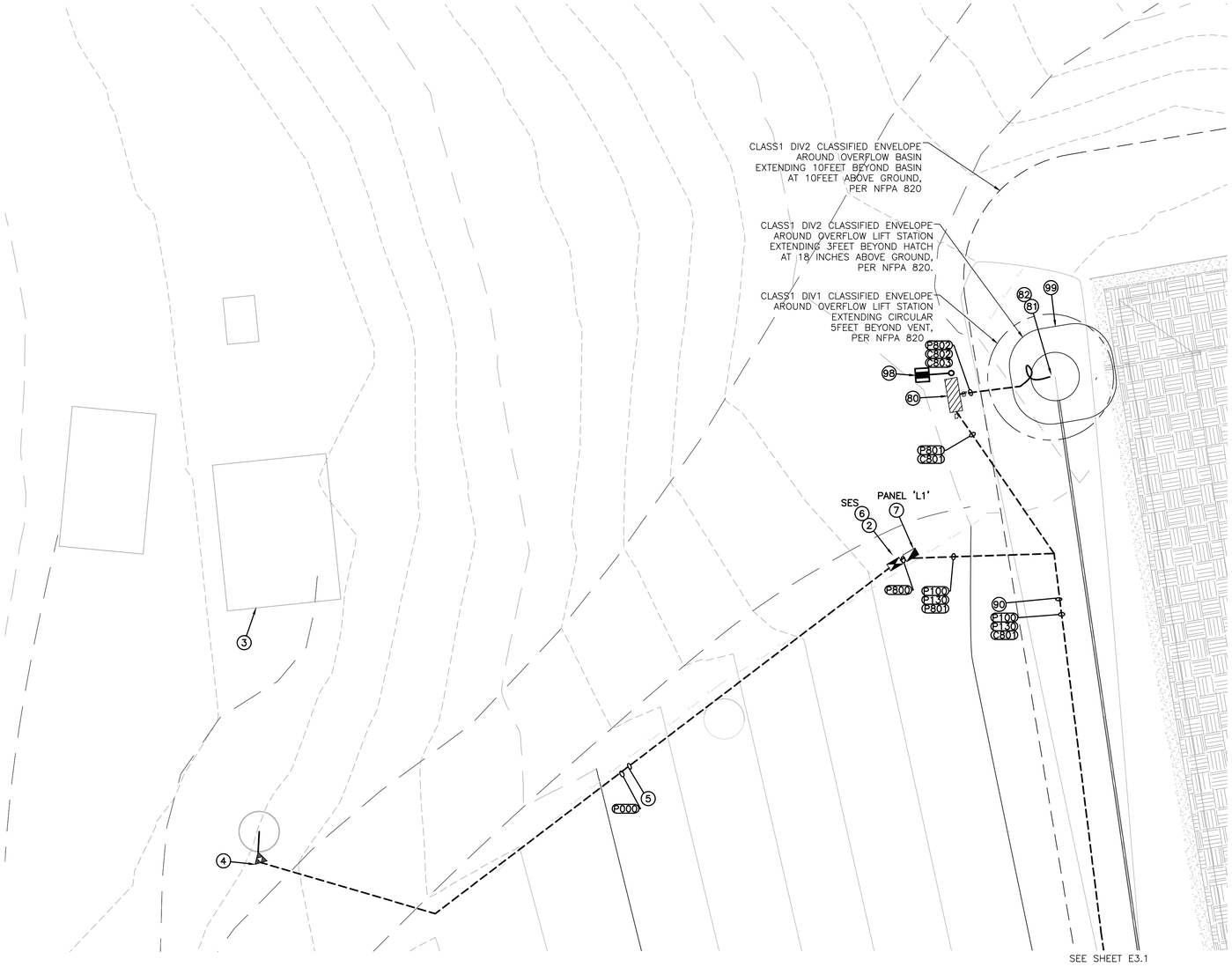

CONSTRUCTION NOTES

(2) REMOVE EXISTING SES AND PANEL AND DISPOSE OF PROPERLY. COORDINATE DISCONNECTION OF THE METER AND SECONDARY CONDUCTORS WITH APS

(3) DE-ENERGIZE EXISTING LAB BUILDING UPON COMPLETION OF CONSTRUCTION OF THE NEW LAB. REMOVE ALL EXISTING CONDUCTORS AND ELECTRICAL EQUIPMENT AND DISPOSE OF PROPERLY. COORDINATE ALL WORK WITH OWNER AND POWER COMPANY PRIOR TO DE-ENERGIZATION.

(4) COORDINATE WITH APS TO REPLACE THE EXISTING POLE MOUNTED SINGLE PHASE TRANSFORMER. APS TO INSTALL THREE PHASE TRANSFORMERS. CONTRACTOR SHALL VERIFY LOCATION OF NEW TRANSFORMER WITH APS. APS PLANS WILL DETERMINE EXACT LOCATION AND TAKE PRECEDENCE OVER THESE DRAWINGS. COORDINATE ALL WORK WITH APS.

(5) APS SERVICE LINE. TRENCH AND INSTALL CONDUIT PER APS SPECIFICATIONS. POWER COMPANY PLANS WILL DETERMINE EXACT LOCATION OF CONDUIT AND TAKE PRECEDENCE OVER THESE DRAWINGS.

(6) SES, 400 AMP, 277/480V, 3ø, 4W, SEE DETAIL 1 ON E4.1.

(80) OVERFLOW LIFT PUMP CONTROL PANEL, BY VENDOR. 240V, 1ø, 3W. ELECTRICAL CONTRACTOR SHALL MAKE ALL POWER AND CONTROL CONNECTIONS PER THESE PLANS AND SPECIFICATIONS AND THE MANUFACTURERS REQUIREMENTS. SEE DETAIL 1 ON SHEET E4.4.

(81) OVERFLOW LIFT PUMP. ELECTRICAL CONTRACTOR SHALL MAKE ALL POWER AND CONTROL CONNECTIONS PER THESE PLANS AND SPECIFICATIONS AND THE MANUFACTURERS REQUIREMENTS. SEE DETAIL 4 ON SHEET E4.5.

(82) LEVEL FLOAT. ELECTRICAL CONTRACTOR SHALL MAKE ALL POWER AND CONTROL CONNECTIONS PER THESE PLANS AND SPECIFICATIONS AND THE MANUFACTURERS REQUIREMENTS. SEE DETAIL 4 ON SHEET E4.5.

(90) JOINT TRENCH WITH WATER LINES. MAINTAIN 24-INCH SEPARATION. SEE DETAIL 3 ON SHEET E4.3.

(98) 20A 120V GFCI DUPLEX RECEPTACLE WITH METAL WEATHERPROOF WHILE-IN-USE AND LOCKABLE COVER INSTALLED ONTO LIGHT POLE. SEE DETAIL 2 ON SHEET E4.5.

LEGEND

- PROPOSED 3ø POWER COMPANY TRANSFORMER
- SES 400A 277/480V 3ø 4W
- TRANSFORMER 480V-120/240V
- PANEL 120/240V 1ø 3W
- CONTROL PANEL
- EYS SEALS, CLASS 1 DIVISION 1
- ELECTRICAL SWITCH
- 120V GFCI RECEPTACLE
- 120V GFCI QUADRUPLEX RECEPTACLE
- ELECTRICAL AND COMMUNICATION PULL BOXES
- NEW PULL BOX
- NON FUSED NEMA 4X DISCONNECT
- UNDERGROUND ELECTRICAL CONDUIT
- ABOVE GROUND ELECTRICAL CONDUIT
- FLEXIBLE METALLIC CONDUIT
- GROUNDING ELECTRODE CONDUCTOR
- GROUND ROD WITH INSPECTION WELL. INSPECTION WELL IS ONLY FOR THE FIRST GROUND ROD CONNECTED TO

ELECTRICAL SITE PLAN - SES & OVERFLOW PUMP STATION

GRAPHIC SCALE
5 2.5 0 2.5 5 10
1 INCH = 5 FEET
NORTH

WRIGHT engineering corporation
ELECTRICAL ENGINEERING AND DESIGN
165 EAST CHILTON DRIVE
CHANDLER, ARIZONA 85225
PHONE: 480.497.5829
FAX: 480.497.5807
www.wrightengineering.us
Wright Project # 23319

CALL TWO WORKING DAYS BEFORE YOU DIG
602-263-1100
1-800-STAKE-IT
(OUTSIDE MARICOPA COUNTY)

NO	BY	DATE	REVISIONS	DATE	APP.

Registered Professional Engineer (Electrical) Certificate No. 73954 JAMES RILLETT DAY Date Signed 11-24-25 Expires 9-30-27

THESE DRAWINGS ARE THE PROPERTY OF P.A.C.E. AND SHALL NOT BE REPRODUCED IN ANY MANNER NOR BE USED FOR CONSTRUCTION UNLESS STAMPED "ISSUED FOR CONSTRUCTION".

PREPARED BY: WRIGHT ENGINEERING
DESIGNED BY: JHB
DRAWN BY: XAG
CHECKED BY: JHB
DATE: NOV 2025
JOB NO.: B614
SCALE: AS NOTED

TITLE: ELECTRICAL OVERFLOW BASIN

JOB: TOWN OF JEROME WASTEWATER TREATMENT PLANT
YAVAPAI CO. AZ

ISSUED FOR BID

PREPARED BY:
PACE
Advanced Water Engineering
8723 E. VIA de COMMERCIO, SUITE 104, SCOTTSDALE, CA 85258
P: (408) 991-3595 | www.pacewater.com

SHEET
E3.6
83 OF 99 SHEETS

JOB NO. B614

K:\2025\25-pwwwa WWTP\25195.dwg Tab: E3.5 by pwww on 11/25/25 at 8:05:41 PM

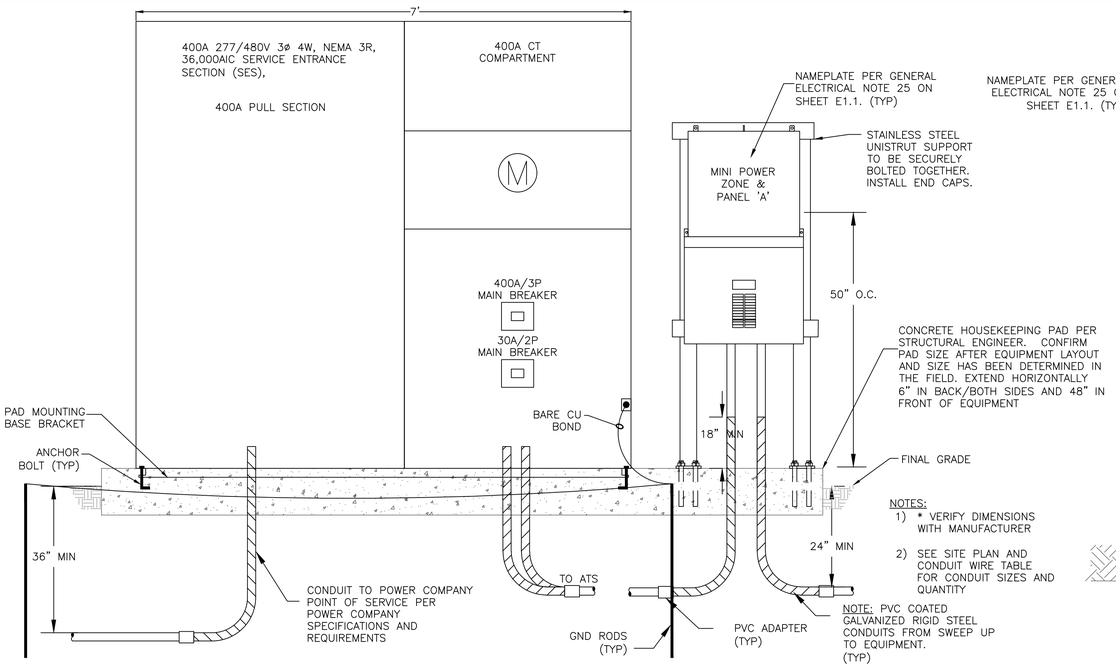

1 SES ELEVATION DETAIL

NO SCALE

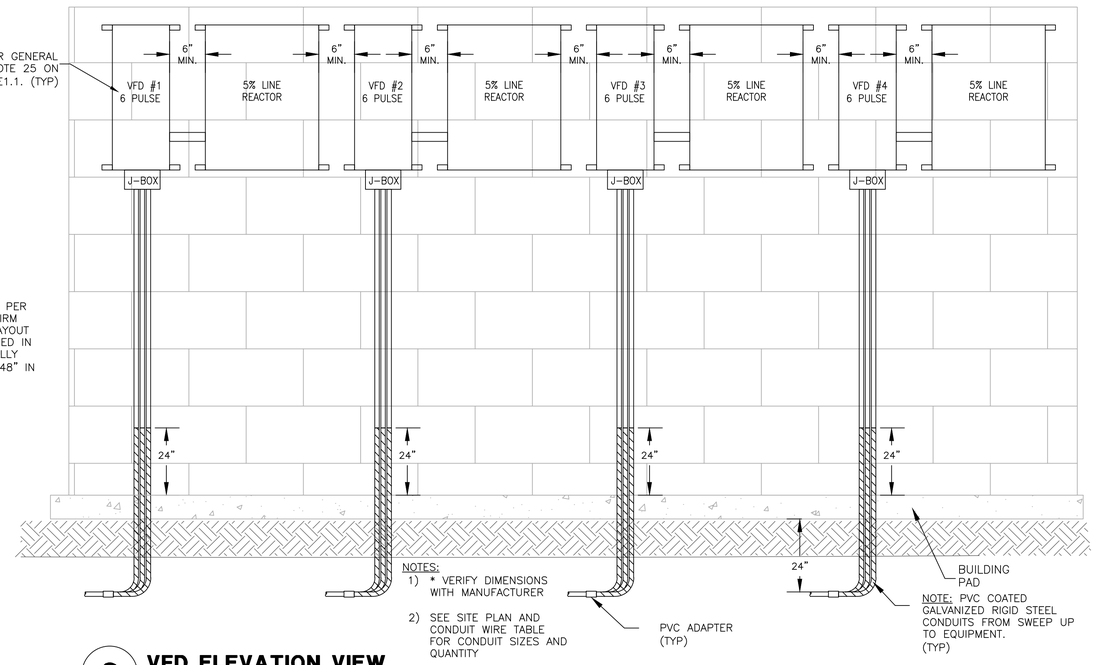

3 VFD ELEVATION VIEW

NOT TO SCALE

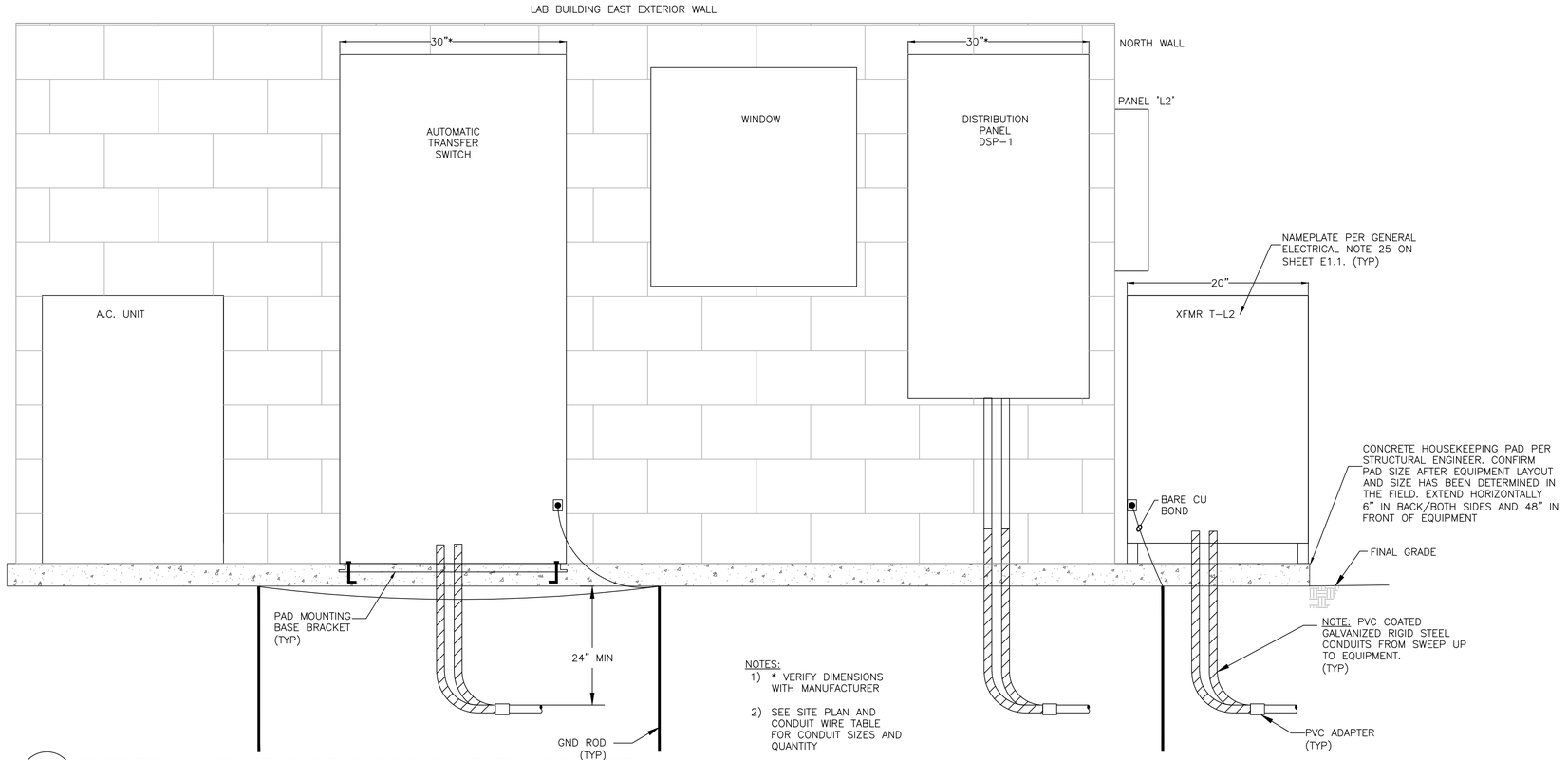

2 ELECTRICAL PANELS AT BUILDING - ELEVATION DETAIL

NO SCALE

WRIGHT engineering corporation
ELECTRICAL ENGINEERING AND DESIGN
165 EAST CHILTON DRIVE
CHANDLER, ARIZONA 85225
PHONE: 480.497.5829
FAX: 480.497.5807
www.wrightengineering.us
Wright Project # 23319

CALL TWO WORKING DAYS BEFORE YOU DIG
602-263-1100
1-800-STAKE-IT
(OUTSIDE MARICOPA COUNTY)

NO	BY	DATE	REVISIONS	DATE	APP.

Registered Professional Engineer (Electrical) Certificate No. 73954 JASON BILLEDT Date Signed 9-30-24 Expires 9-30-27

PREPARED BY: WRIGHT ENGINEERING
DESIGNED BY: JHB
DRAWN BY: XAG
CHECKED BY: JHB
SCALE: AS NOTED
DATE: NOV 2025
JOB NO. B614

THESE DRAWINGS ARE THE PROPERTY OF P.A.C.E. AND SHALL NOT BE REPRODUCED IN ANY MANNER NOR BE USED FOR CONSTRUCTION UNLESS STAMPED "ISSUED FOR CONSTRUCTION".

TITLE: ELECTRICAL DETAILS I

JOB: TOWN OF JEROME WASTEWATER TREATMENT PLANT YAVAPAI CO. AZ

ISSUED FOR BID

PREPARED BY:
PACE
Advanced Water Engineering
8721 E. Via de Commercio, Suite 104 | SCOTTSDALE, CA 85258
P: (408) 991-3595 | www.pacewater.com

SHEET E4.1
84 OF 99 SHEETS

JOB NO. B614

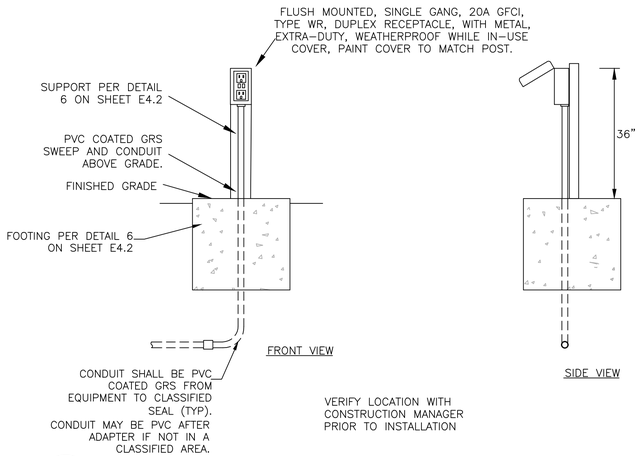

1 RECEPTACLE PEDESTAL DETAIL

NO SCALE

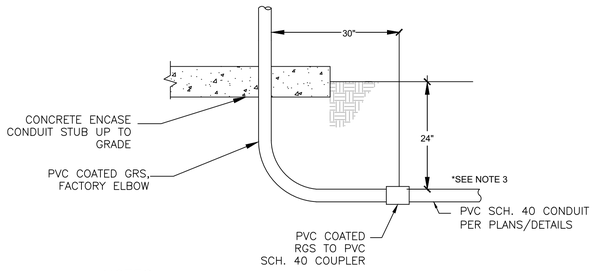

NOTES:
1. ALL DIMENSIONS SHOWN ARE MINIMUM.
2. PROVIDE 6 INCH COVER OF CONCRETE WITHIN 2 FEET OF ALL DRIVABLE AREAS PER DETAILS AND PLAN.
3. CONDUITS THROUGH CLASSIFIED AREA SHALL BE PVC COATED RGS UNDERGROUND

2 TYPICAL CONDUIT STUB UP DETAIL

NO SCALE

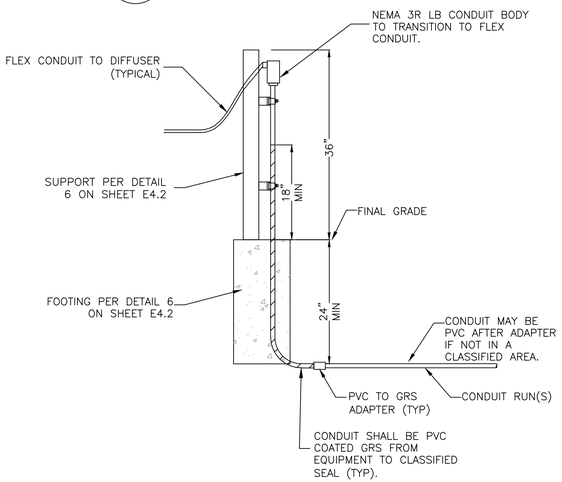

3 CONDUIT TO EQUIPMENT SUPPORT DETAIL

NO SCALE

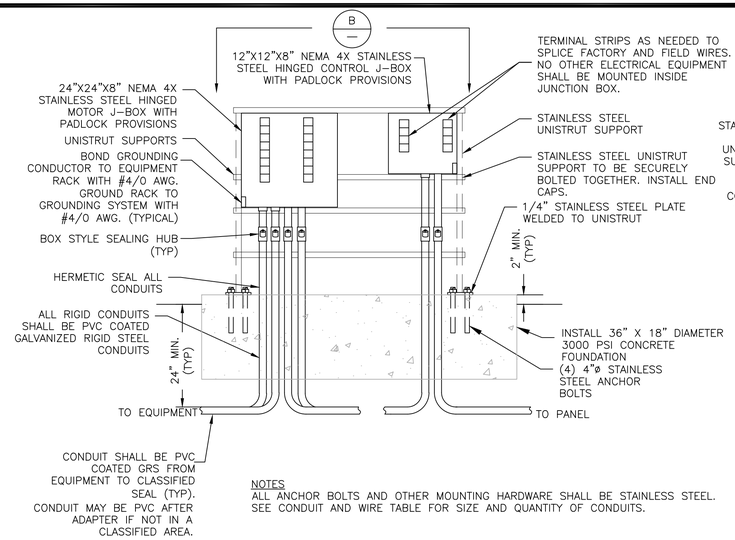

NOTES
ALL ANCHOR BOLTS AND OTHER MOUNTING HARDWARE SHALL BE STAINLESS STEEL.
SEE CONDUIT AND WIRE TABLE FOR SIZE AND QUANTITY OF CONDUITS.

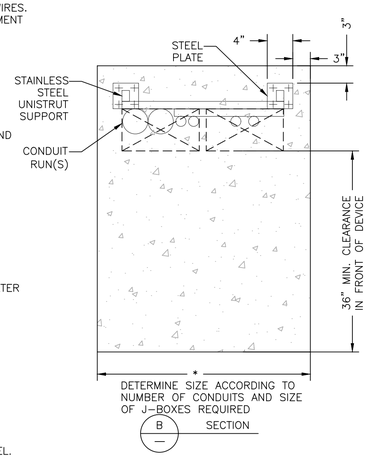

NOTES:
1) A 36" MIN. CLEARANCE SHALL BE MAINTAINED IN FRONT OF ALL ELECTRICAL DEVICES.

2) ALL EXPOSED CONDUITS SHALL BE GALVANIZED RIGID STEEL TO BELOW GRADE PAST 90° BEND TO PVC/GRS ADAPTER UNLESS OTHERWISE NOTED ON PLANS. WRAP PER GENERAL NOTE 11 ON SHEET E1.1.

3) ALL JUNCTION BOXES SHALL BE NEMA-4X STAINLESS STEEL UNLESS OTHERWISE NOTED ON PLANS.

4) ALL BARE STEEL COMPONENTS SHALL BE PRIMED AND PAINTED TAN TO MATCH SURROUNDING EQUIPMENT.

5) SEE RESPECTIVE SITE PLAN FOR CONDUIT SIZE AND QUANTITY DESIGNATIONS.

6)CONTRACTOR SHALL MAINTAIN AN 18" AIR GAP FOR CONDUIT RUN COMING FROM WET WELL. AIR GAP SHALL BE LOCATED AT THE JUNCTION BOX. CONTRACTOR SHALL INSTALL HERMETIC SEALS AT THE END OF THE THE CONDUIT RUNS INTO VAULT WALL TO PREVENT MOISTURE FROM ENTERING CONDUIT. CONDUIT SHALL BE CONTINUOUS GRS FROM WET WELL TO AIR GAP.

4 STANCHION MOUNTED JUNCTION BOX

NO SCALE

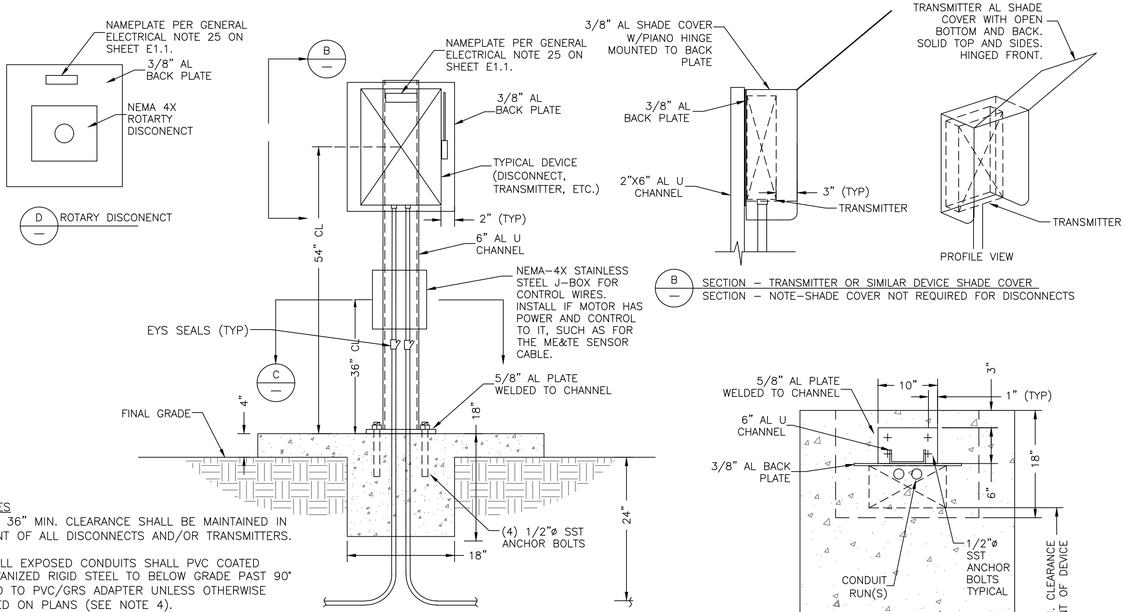

NOTES
1) A 36" MIN. CLEARANCE SHALL BE MAINTAINED IN FRONT OF ALL DISCONNECTS AND/OR TRANSMITTERS.

2) ALL EXPOSED CONDUITS SHALL PVC COATED GALVANIZED RIGID STEEL TO BELOW GRADE PAST 90° BEND TO PVC/GRS ADAPTER UNLESS OTHERWISE NOTED ON PLANS (SEE NOTE 4).

3) ALL DISCONNECTS SHALL BE NEMA-4X STAINLESS STEEL UNLESS OTHERWISE NOTED ON PLANS.

4)CONTRACTOR SHALL MAINTAIN 18" AIR GAP ON CONDUIT RUN COMING FROM WET WELL. AIR GAP SHALL BE LOCATED AT THE JUNCTION BOX. AIR GAP SHALL CONFORM TO THE NATIONAL ELECTRICAL CODE FOR CLASS 1, DIVISION 1 HAZARDOUS AREA. CONTRACTOR SHALL INSTALL HERMETIC SEALS AT THE END OF THE THE CONDUIT RUNS INTO VAULT WALL TO PREVENT MOISTURE FROM ENTERING CONDUIT. CONDUIT SHALL BE CONTINUOUS GRS FROM WET WELL TO 18" AIR GAP.

5 DISCONNECT/CONTROL NEMA 4X J-BOX DETAIL

NO SCALE

NO	BY	DATE	REVISIONS	DATE	APP.

Registered Professional Engineer (Retired) Certificate No. 73954 JAMES BELLEDIN Date Signed 9-30-25 Expires 9-30-27

PREPARED BY: WRIGHT ENGINEERING
DESIGNED BY: JHB
DRAWN BY: XAG
CHECKED BY: JHB
DATE: NOV 2025
JOB NO.: B614
SCALE: AS NOTED

THESE DRAWINGS ARE THE PROPERTY OF P.A.C.E. AND SHALL NOT BE REPRODUCED IN ANY MANNER NOR BE USED FOR CONSTRUCTION UNLESS STAMPED "ISSUED FOR CONSTRUCTION".

TITLE: ELECTRICAL DETAILS II

JOB: TOWN OF JEROME WASTEWATER TREATMENT PLANT YAVAPAI CO. AZ

ISSUED FOR BID

PREPARED BY:
PACE
Advanced Water Engineering
8723 E. Via de Ventura, Suite 110, SCOTTSDALE, CA 85258
P: (480) 991-3955 | www.pacewater.com

SHEET
E4.2
85 OF 99 SHEETS

JOB NO. B614

WRIGHT engineering corporation
ELECTRICAL ENGINEERING AND DESIGN
165 EAST CHILTON DRIVE
CHANDLER, ARIZONA 85225
PHONE: 480.497.5829
FAX: 480.497.5807
www.wrightengineering.us
Wright Project # 23319

CALL TWO WORKING DAYS BEFORE YOU DIG
602-263-1100
1-800-STAKE-IT
(OUTSIDE MARICOPA COUNTY)

I:\2025\23319-Jerome WWTP\23319 E.dwg, Tab: E4.2, by jacob on 11/04/25 at 3:56:10 PM

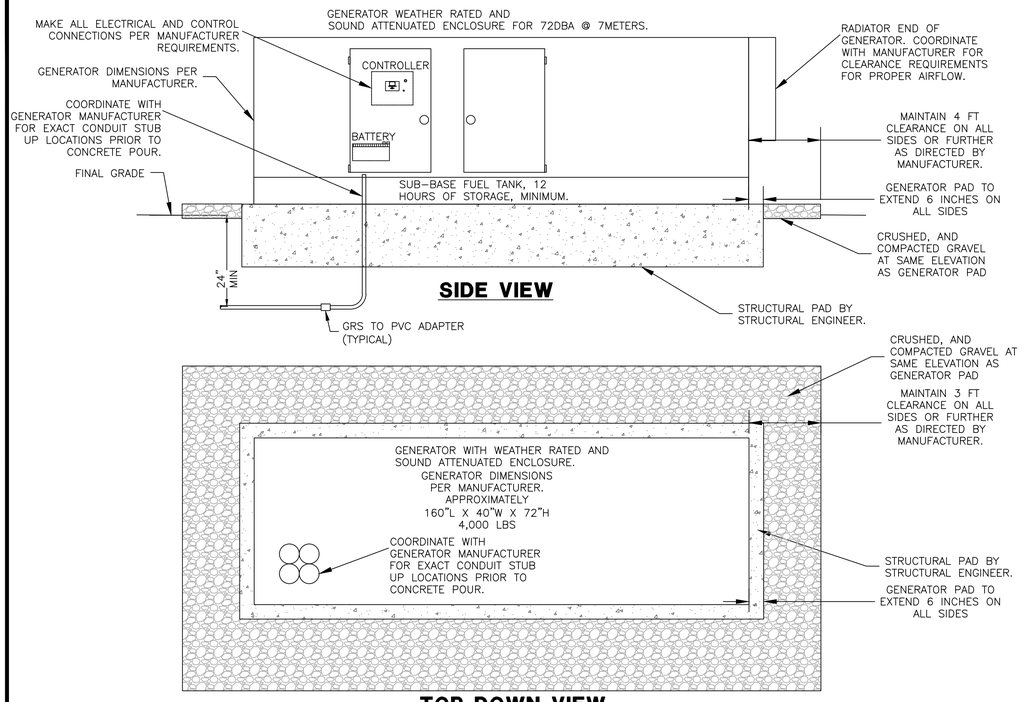

1 GENERATOR INSTALLATION DETAIL

NO SCALE

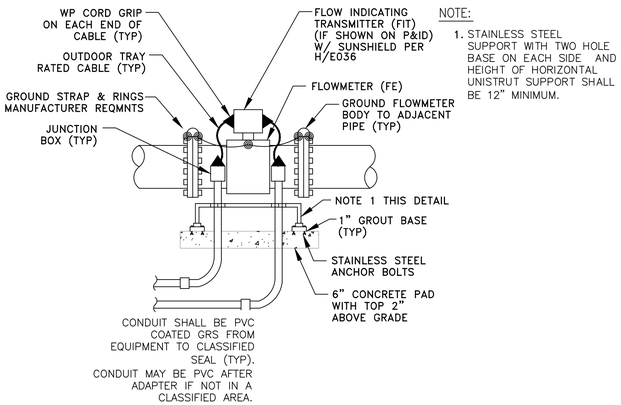

NOTE:

1. STAINLESS STEEL SUPPORT WITH TWO HOLE BASE ON EACH SIDE AND HEIGHT OF HORIZONTAL UNISTRUT SUPPORT SHALL BE 12" MINIMUM.

4 FLOWMETER DETAIL

NO SCALE

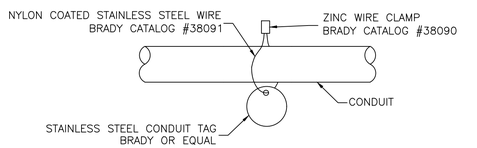

2 CONDUIT TAG DETAIL

NO SCALE

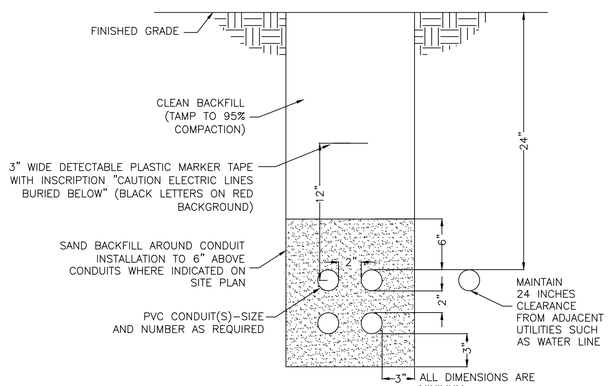

NOTE:

1) THIS CONDUIT DUCT BANK DETAIL SHALL BE REFERENCED FOR ALL UNDER GROUND CONDUIT INSTALLATIONS.

2) INSTALL CONDUIT SPACERS EVERY 6 FT. MAX., CARLON OR EQUAL.

3 CONDUIT DUCT BANK INSTALLATION DETAIL

NO SCALE

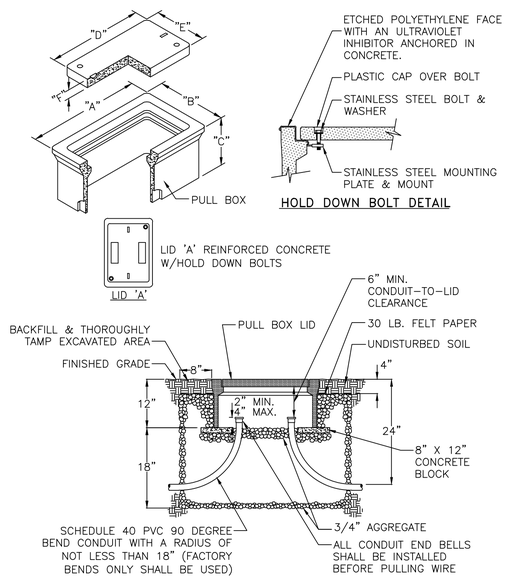

5 PULL BOX INSTALLATION DETAIL

NO SCALE

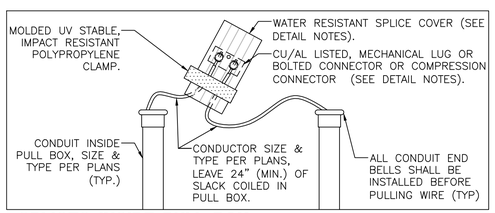

SPLICES INSIDE PULL BOX

DETAIL NOTES:

1. THE PULL BOX SHALL BE MADE OF A HIGH DENSITY REINFORCED CONCRETE MATERIAL WITH END & SIDE KNOCKOUTS, & NON-SETTLING SHOULDERS TO MAINTAIN GRADE, MANUFACTURED WITH APPROXIMATE DIMENSIONS AS SHOWN.
2. STEEL REINFORCEMENT SHALL BE AS REGULARLY USED IN STANDARD PRODUCTS OF THE RESPECTIVE MANUFACTURER.
3. COVER LETTERING SHALL BE 1" LETTERS CAST IN STANDARD MARKINGS: "ELECTRIC" OR "HIGH VOLTAGE" OR "COMMUNICATIONS". AS REQUIRED.
4. THE PULL BOX SHALL HAVE AN ETCHED POLYETHYLENE FACE WITH AN ULTRAVIOLET INHIBITOR ANCHORED IN CONCRETE.
5. ALL CABLE & CONDUCTOR SPLICES MADE USING CU/AL LISTED, MECHANICAL LUG OR BOLTED CONNECTOR OR COMPRESSION CONNECTOR, (TYCO ELECTRONICS, NSI INDUSTRIES, ILSCO OR APPROVED EQUAL). CONNECTION TO BE INSULATED & MADE WATER RESISTANT WITH TYCO ELECTRONICS GELCAP-SL, NSI INDUSTRIES ESSLK-2/0 OR 3M SCOTCHCAST SPLICE KIT 85 SERIES.

DATA TABLE

PULLBOX TYPE	PULLBOX LENGTH	PULLBOX WIDTH	PULLBOX HEIGHT	LID LENGTH	LID WIDTH	LID HEIGHT
	"A"	"B"	"C"	"D"	"E"	"F"
#3-1/2	19-3/4"	14-1/4"	12"	15-1/2"	10"	1-3/4"
#5	25-1/8"	15-5/8"	12"	20-3/4"	10-5/8"	2"
#7	35"	22"	12"	30-1/2"	17-1/2"	2"
#9	40-1/2"	28-1/4"	18"	35-1/2"	24"	3"

WRIGHT engineering corporation
ELECTRICAL ENGINEERING AND DESIGN
165 EAST CHILTON DRIVE
CHANDLER, ARIZONA 85225
PHONE: 480.497.5829
FAX: 480.497.5807
www.wrightengineering.us
Wright Project # 23319

CALL TWO WORKING DAYS BEFORE YOU DIG
602-263-1100
1-800-STAKE-IT
(OUTSIDE MARICOPA COUNTY)

NO	BY	DATE	REVISIONS	DATE	APP.

THESE DRAWINGS ARE THE PROPERTY OF P.A.C.E. AND SHALL NOT BE REPRODUCED IN ANY MANNER NOR BE USED FOR CONSTRUCTION UNLESS STAMPED "ISSUED FOR CONSTRUCTION".

Registered Professional Engineer (Electrical) Certificate No. 73954 JASON BILLEDT Date Signed 9-30-25 Expires 9-30-27

PREPARED BY: WRIGHT ENGINEERING
DESIGNED BY: JHB
DRAWN BY: XAG
CHECKED BY: JHB
SCALE: AS NOTED
DATE: NOV 2025
JOB NO. B614

TITLE: ELECTRICAL DETAILS III

JOB: TOWN OF JEROME WASTEWATER TREATMENT PLANT YAVAPAI CO. AZ

ISSUED FOR BID

PREPARED BY:
PACE
Advanced Water Engineering
8123 E. VIA DE COMERCIO, BUILDING 3, SCOTTSDALE, CA 85258
P: (480) 991-3555 | www.pacewater.com

SHEET E4.3
86 OF 99 SHEETS

JOB NO. B614

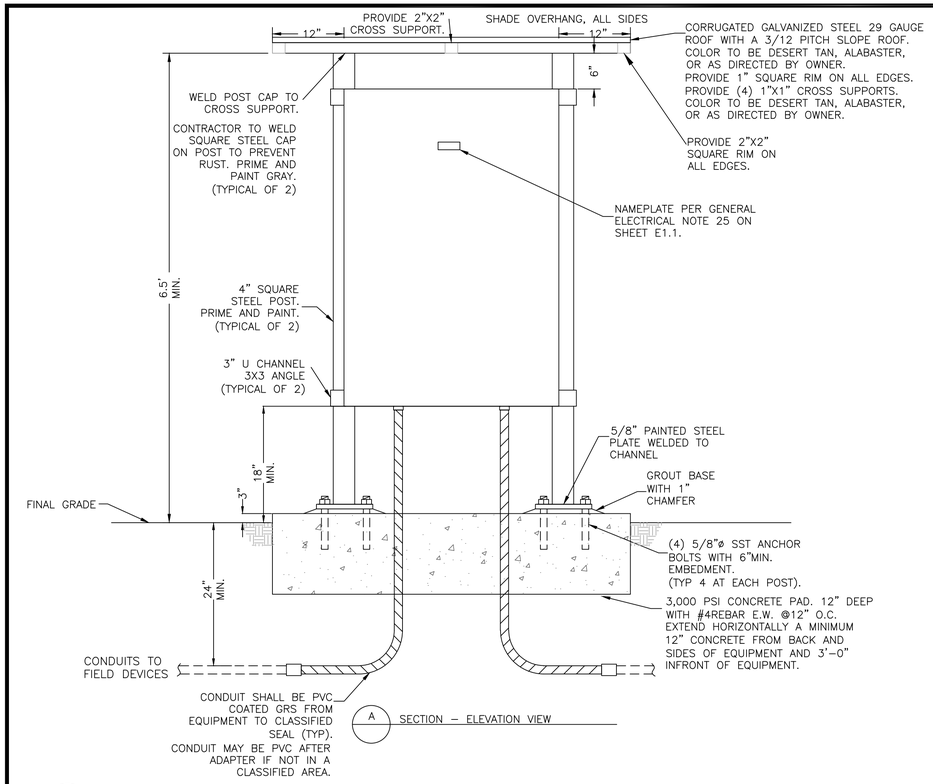

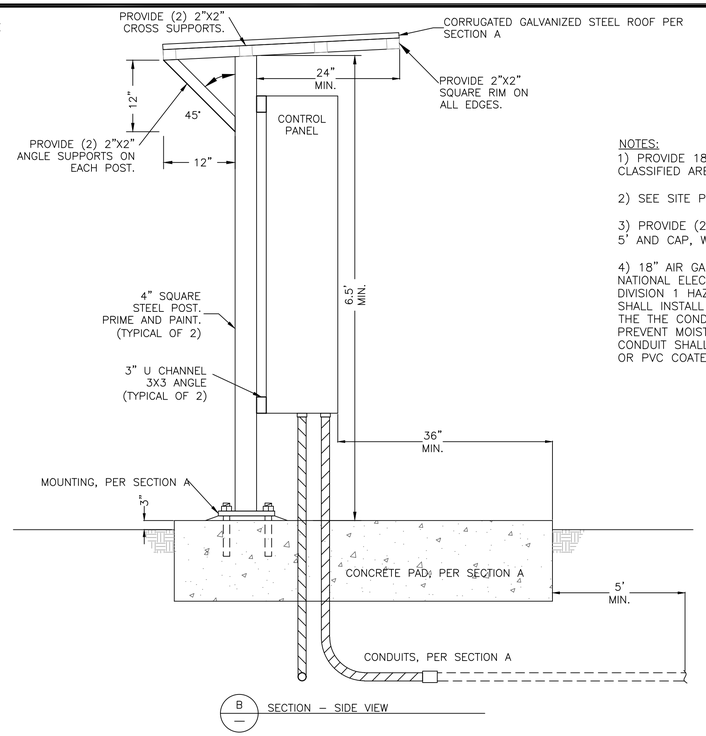

NOTES:

1) PROVIDE 18" AIR GAP WHEN CONDUITS ENTER CLASSIFIED AREAS.

2) SEE SITE PLAN FOR QUANTITY OF CONDUITS.

3) PROVIDE (2) 1.5" SPARE CONDUITS, EXTEND 5' AND CAP, WITH DETECTABLE PULL ROPE.

4) 18" AIR GAP SHALL CONFORM TO THE NATIONAL ELECTRICAL CODE FOR CLASS 1, DIVISION 1 HAZARDOUS AREA. CONTRACTOR SHALL INSTALL HERMETIC SEALS AT THE END OF THE THE CONDUIT RUNS INTO VAULT WALL TO PREVENT MOISTURE FROM ENTERING CONDUIT. CONDUIT SHALL BE CONTINUOUS GRS WRAPPED OR PVC COATED FROM WET WELL TO AIR GAP.

1 FREESTANDING CONTROL PANEL

NO SCALE

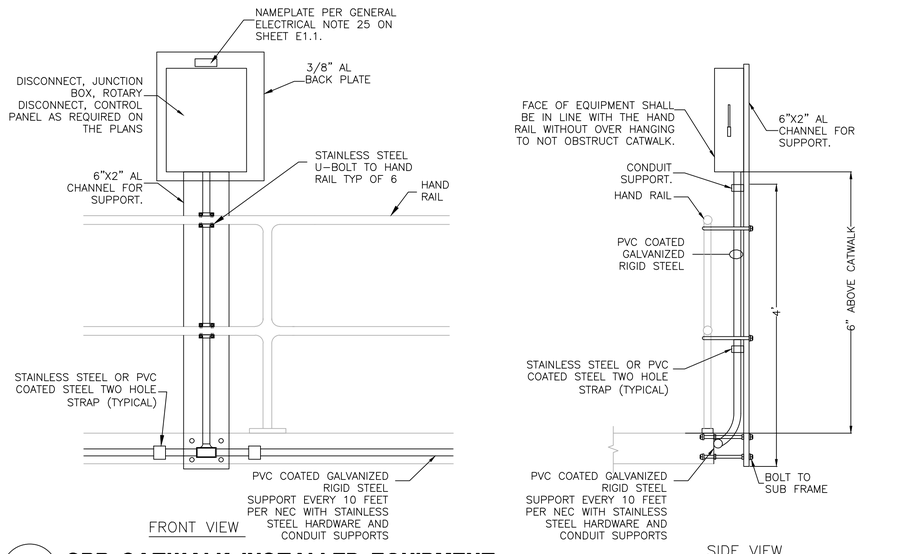

2 SBR CATWALK INSTALLED EQUIPMENT

NO SCALE

NO	BY	DATE	REVISIONS	DATE	APP.

Registered Professional Engineer (Electrical) Certificate No. 73954 JASON BILLETDEAUX 09-30-25 Expires 9-30-27

PREPARED BY: WRIGHT ENGINEERING
DESIGNED BY: JHB
DRAWN BY: XAG
CHECKED BY: JHB
SCALE: AS NOTED
DATE: NOV 2025
JOB NO.: B614

TITLE: ELECTRICAL DETAILS IV

JOB: TOWN OF JEROME WASTEWATER TREATMENT PLANT, YAVAPAI CO. AZ

THESE DRAWINGS ARE THE PROPERTY OF P.A.C.E. AND SHALL NOT BE REPRODUCED IN ANY MANNER NOR BE USED FOR CONSTRUCTION UNLESS STAMPED "ISSUED FOR CONSTRUCTION".

ISSUED FOR BID

PREPARED BY:

PACE
Advanced Water Engineering
8712 E. Via de Commercio, Suite 3A, Scottsdale, CA 85258
P: (480) 991-3595 | www.pacewater.com

SHEET E4.4
87 OF 99 SHEETS

JOB NO. B614

WRIGHT engineering corporation
ELECTRICAL ENGINEERING AND DESIGN
165 EAST CHILTON DRIVE
CHANDLER, ARIZONA 85225
PHONE: 480.497.5829
FAX: 480.497.5807
www.wrightengineering.us
Wright Project # 23319

CALL TWO WORKING DAYS BEFORE YOU DIG
602-263-1100
1-800-STAKE-IT
(OUTSIDE MARICOPA COUNTY)

H:\2025\2519-Jerome WWTP\2519-Dwg - Ctb: E4.4 - by pcetto on 11/04/25 at 10:04:38 PM

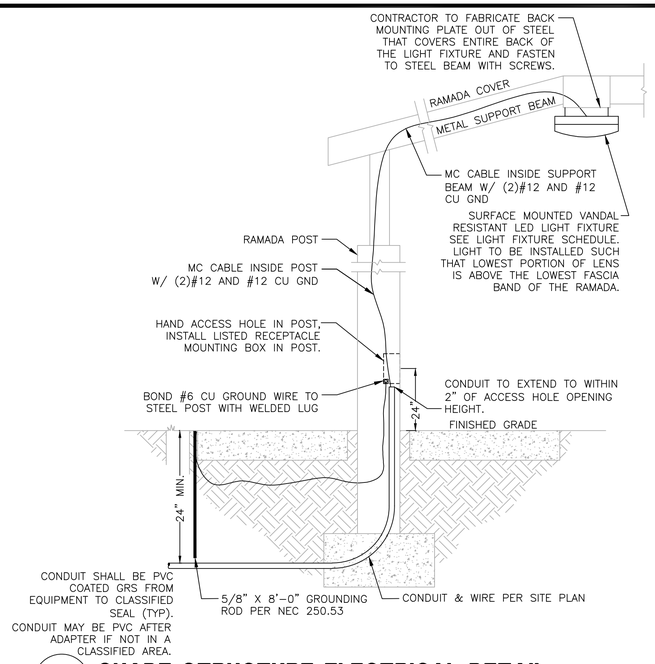

1 SHADE STRUCTURE ELECTRICAL DETAIL

NO SCALE

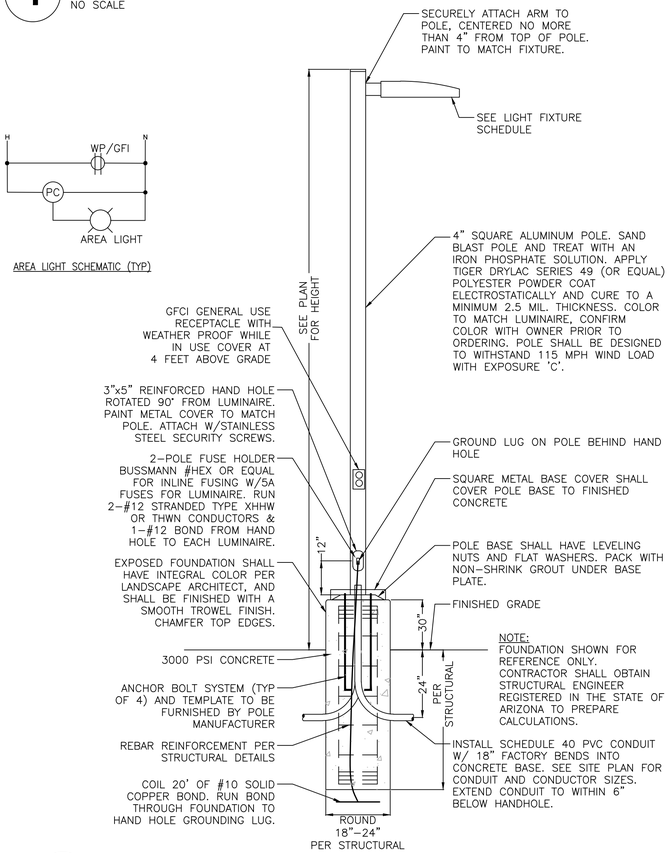

2 AREA LIGHT DETAIL

NO SCALE

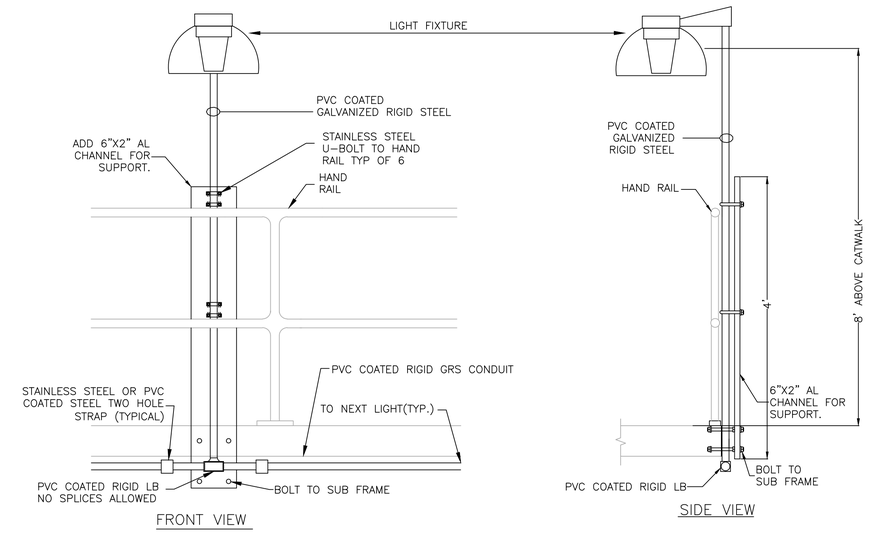

3 SBR LIGHT DETAIL

NO SCALE

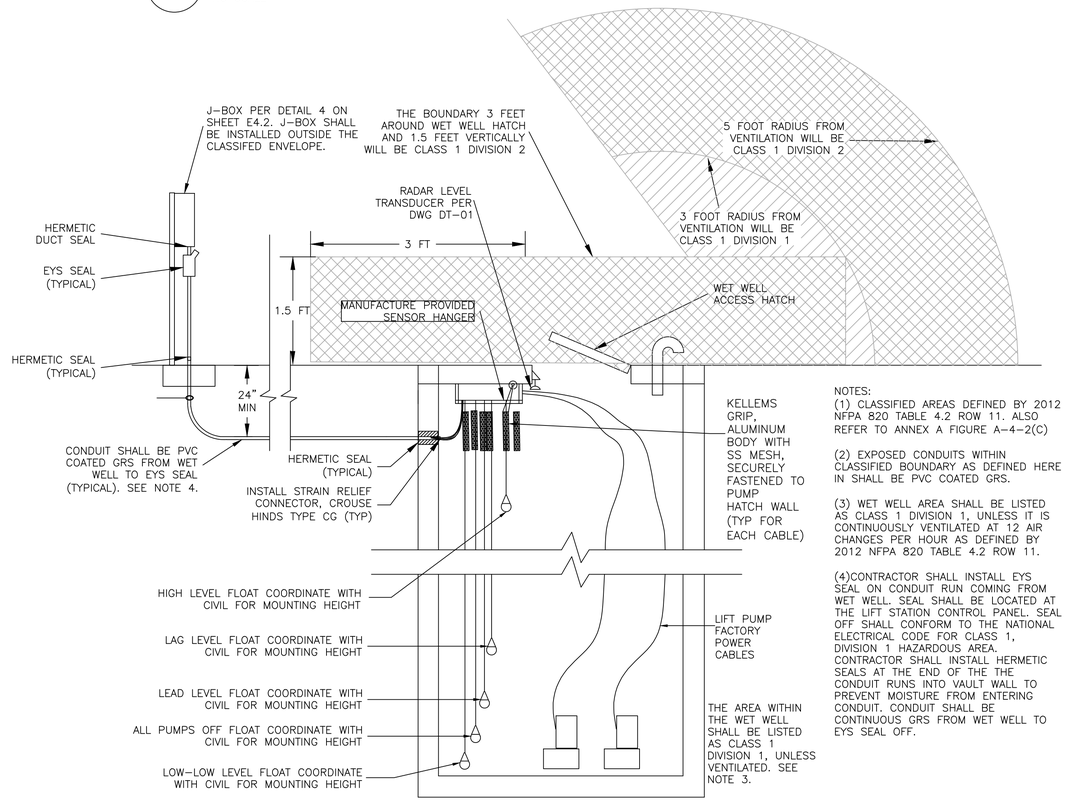

NOTES:
(1) CLASSIFIED AREAS DEFINED BY 2012 NFPA 820 TABLE 4.2 ROW 11. ALSO REFER TO ANNEX A FIGURE A-4-2(C)

(2) EXPOSED CONDUITS WITHIN CLASSIFIED BOUNDARY AS DEFINED HERE IN SHALL BE PVC COATED GRS.

(3) WET WELL AREA SHALL BE LISTED AS CLASS 1 DIVISION 1, UNLESS IT IS CONTINUOUSLY VENTILATED AT 12 AIR CHANGES PER HOUR AS DEFINED BY 2012 NFPA 820 TABLE 4.2 ROW 11.

(4)CONTRACTOR SHALL INSTALL EYS SEAL ON CONDUIT RUN COMING FROM WET WELL. SEAL SHALL BE LOCATED AT THE LIFT STATION CONTROL PANEL. SEAL OFF SHALL CONFORM TO THE NATIONAL ELECTRICAL CODE FOR CLASS 1, DIVISION 1 HAZARDOUS AREA. CONTRACTOR SHALL INSTALL HERMETIC SEALS AT THE END OF THE THE CONDUIT RUNS INTO VAULT WALL TO PREVENT MOISTURE FROM ENTERING CONDUIT. CONDUIT SHALL BE CONTINUOUS GRS FROM WET WELL TO EYS SEAL OFF.

4 LIFT STATION DETAIL

NO SCALE

NOTE
LEVEL CONTROLS SHOWN FOR REFERENCE ONLY, MOUNT LEVEL CONTROLS PER CIVIIL/MECHANICAL DRAWINGS.

WRIGHT engineering corporation
ELECTRICAL ENGINEERING AND DESIGN
165 EAST CHILTON DRIVE
CHANDLER, ARIZONA 85225
PHONE: 480.497.5829
FAX: 480.497.5807
www.wrightengineering.us
Wright Project # 23319

CALL TWO WORKING DAYS BEFORE YOU DIG
602-263-1100
1-800-STAKE-IT
(OUTSIDE MARICOPA COUNTY)

NO	BY	DATE	REVISIONS	DATE	APP.

Registered Professional Engineer (Electrical) Certificate No. 73954 JAMES BELLEDIT 09-30-24 Expires 9-30-27

THESE DRAWINGS ARE THE PROPERTY OF P.A.C.E. AND SHALL NOT BE REPRODUCED IN ANY MANNER NOR BE USED FOR CONSTRUCTION UNLESS STAMPED "ISSUED FOR CONSTRUCTION".

PREPARED BY: WRIGHT ENGINEERING
DESIGNED BY: JHB
DRAWN BY: XAG
CHECKED BY: JHB
DATE: NOV 2025
JOB NO.: B614
SCALE: AS NOTED

TITLE: ELECTRICAL DETAILS V

JOB: TOWN OF JEROME WASTEWATER TREATMENT PLANT YAVAPAI CO. AZ

PREPARED BY:
PACE
Advanced Water Engineering
8723 E. VIA DE COMMERCIO, 1ST FLOOR | SCOTTSDALE, CA 85258
P. (480) 991-3595 | www.pacewater.com

ISSUED FOR BID

SHEET
E4.5
88 OF 99 SHEETS

JOB NO. B614

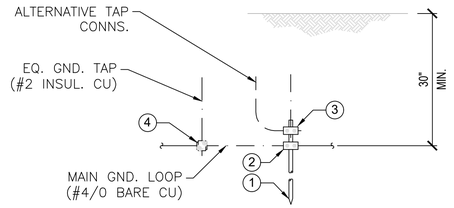

BILL OF MATERIALS		
NO.	DESCRIPTION	QTY
1	GROUND ROD, 3/4" DIA. x 10', COPPER-CLAD STEEL	1
2	GROUND ROD CONNECTOR (5/8"-3/4", 2/0 SOL-250) BURNDY #GAR6429 OR EQUAL.	1
3	GROUND ROD CONNECTOR (5/8"-3/4", #4 SOL-2/0) BURNDY #GAR6426 OR EQUAL.	1
4	GROUND CABLE CONNECTOR (#2/0-250 TO #4-#2/0) BURNDY #GX2926 OR EQUAL.	1

1 GROUND ROD INSTALLATION DETAIL
NO SCALE

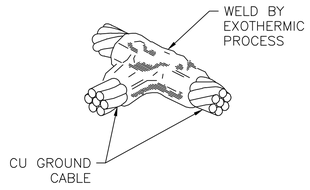

2 GROUND RING CONNECTION DETAIL
NO SCALE

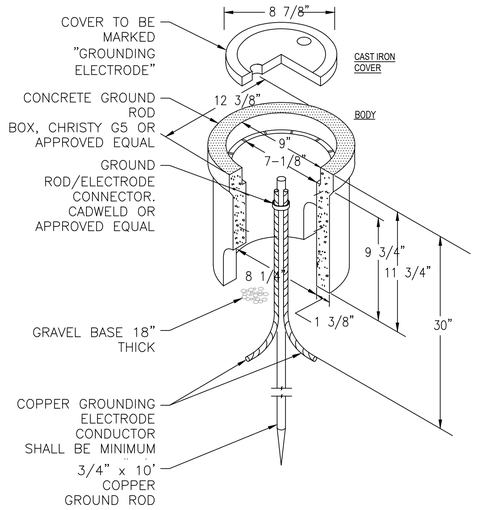

4 CONCRETE GROUND ROD INSPECTION DETAIL
NO SCALE

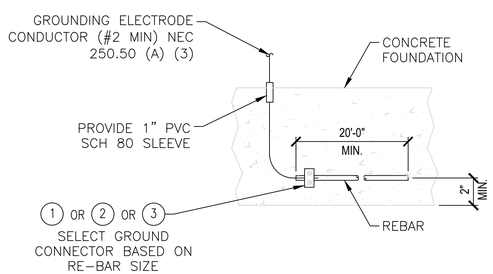

BILL OF MATERIALS		
NO.	DESCRIPTION	QTY
1	#4 RE-BAR, 1/2" DIA. – USE GND. CONN. BURNDY #GAR1126	1
2	#5 OR #6 RE-BAR, 5/8" OR 3/4"DIA. – USE GND. CONN. BURNDY #GAR6426	1
3	#7 OR #8 RE-BAR, 7/8" OR 1"DIA. – USE GND. CONN. BURNDY #GAR1426	1

3 GROUND ROD TO REBAR DETAIL
NO SCALE

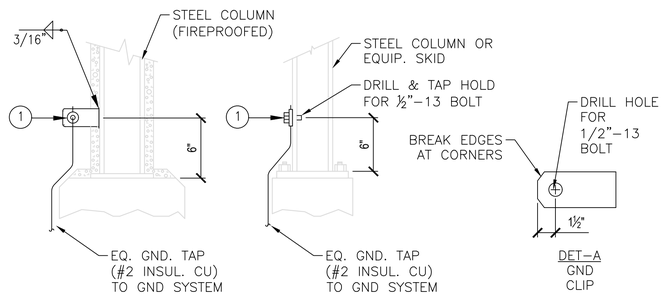

BILL OF MATERIALS		
NO.	DESCRIPTION	QTY
1	SERVIT POST CONNECTOR, 2/C, 1/2"–13 LONG STUD, #2–#2/0 W/ NUT & LOCKWASHER, BURNDY#K2C25B1	1
2	GROUND CLIP, MILD STEEL, 5" x 3" x 1/4" FIELD FABRICATE – SEE DET–A	1

5 GROUNDING CONNECTION - EQUIP/STEEL COLUMN
NO SCALE

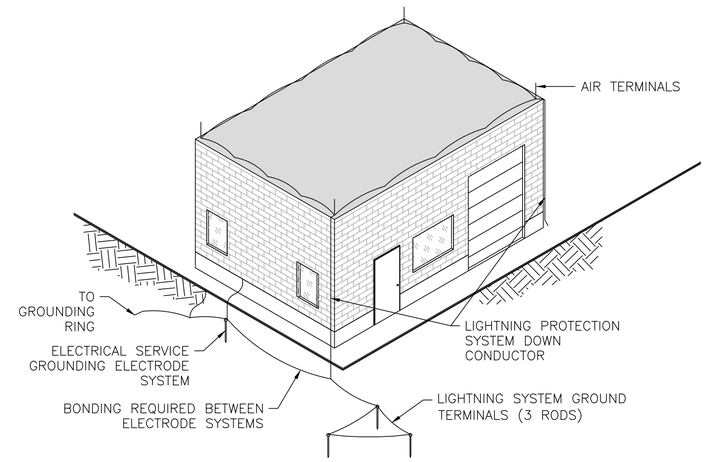

NOTES:
1. THE LIGHTNING ROD IS CONNECTED TO GROUND WITH AT LEAST TWO DOWN CONDUCTORS LOCATED ON OPPOSITE FACADES WHEREVER POSSIBLE.
2. THE DOWN CONDUCTORS MUST BE INSTALLED OUTSIDE THE BUILDING, AVOIDING THE PROXIMITY OF ELECTRICAL CABLES AND GAS. ITS PATH MUST BE AS STRAIGHT AS POSSIBLE, USING THE SHORTEST PATH TO EARTH, AVOIDING ANY SHARP BEND OR LIFT.
3. INSTALL IN ACCORDANCE WITH NFPA 780, NEC 250.60 AND NEC 250.106.
4. DETAIL SHOWN FOR REFERENCE ONLY.

6 LIGHTNING PROTECTION SYSTEM DETAIL
NO SCALE

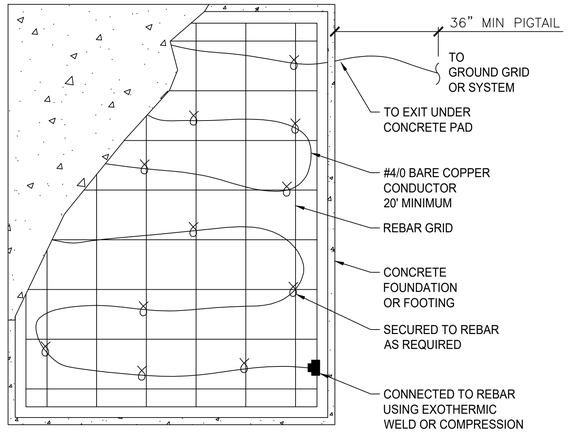

7 CONCRETE GROUNDING DETAIL
NO SCALE

WRIGHT engineering corporation
ELECTRICAL ENGINEERING AND DESIGN
165 EAST CHILTON DRIVE
CHANDLER, ARIZONA 85225
PHONE: 480.497.5829
FAX: 480.497.5807
www.wrightengineering.us
Wright Project # 23319

CALL TWO WORKING DAYS BEFORE YOU DIG
602-263-1100
1-800-STAKE-IT
(OUTSIDE MARICOPA COUNTY)

NO	BY	DATE	REVISIONS	DATE	APP.

Registered Professional Engineer (Electrical) Certificate No. 73954 JASON RILEY LOTT ...24... Expires 9-30-27

THESE DRAWINGS ARE THE PROPERTY OF P.A.C.E. AND SHALL NOT BE REPRODUCED IN ANY MANNER NOR BE USED FOR CONSTRUCTION UNLESS STAMPED "ISSUED FOR CONSTRUCTION".

PREPARED BY: WRIGHT ENGINEERING
DESIGNED BY: JHB
DRAWN BY: XAG
CHECKED BY: JHB
SCALE: AS NOTED
DATE: NOV 2025
JOB NO. B614

TITLE: ELECTRICAL DETAILS VI

JOB: TOWN OF JEROME WASTEWATER TREATMENT PLANT
YAVAPAI CO. AZ

ISSUED FOR BID

PREPARED BY:
PACE
Advanced Water Engineering
8721 E. Via de Ventura, Suite 110, SCOTTSDALE, CA 85258
P: (480) 991-3595 | www.pacewater.com

SHEET
E4.6
89 OF 99 SHEETS

JOB NO. B614

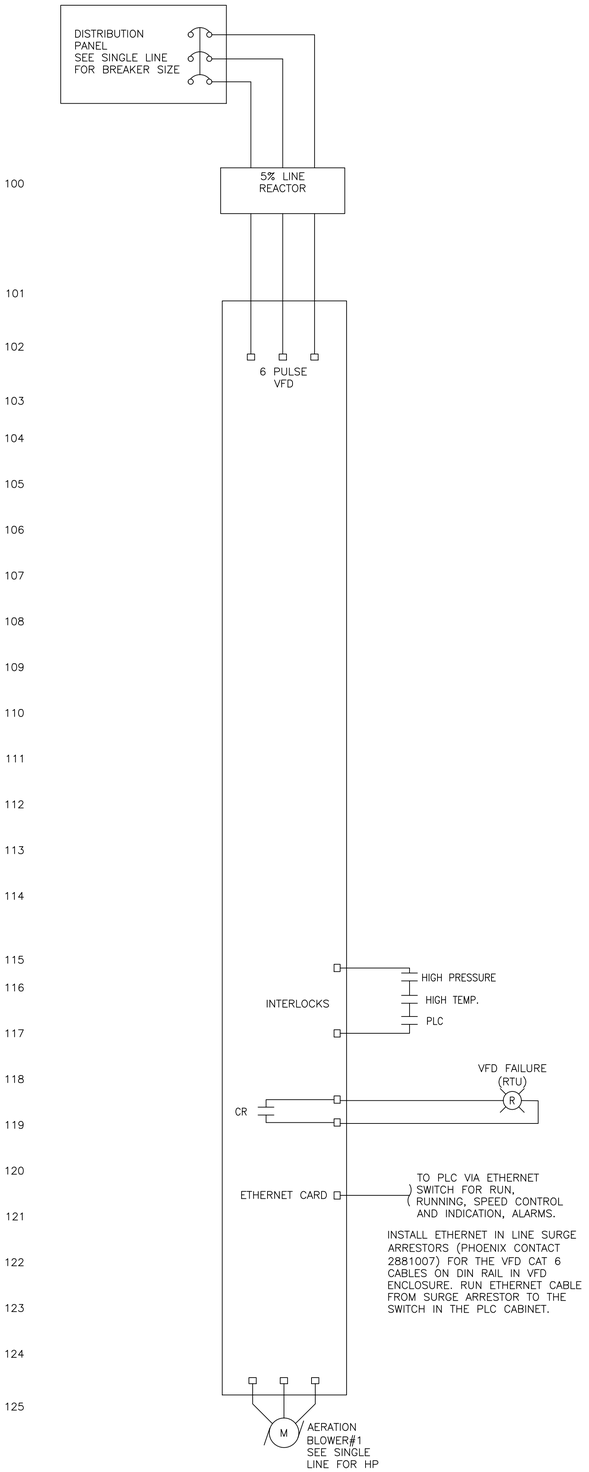

AERATION BLOWER #1 CONTROL SCHEMATIC

24VDC, 120VAC & 480VAC

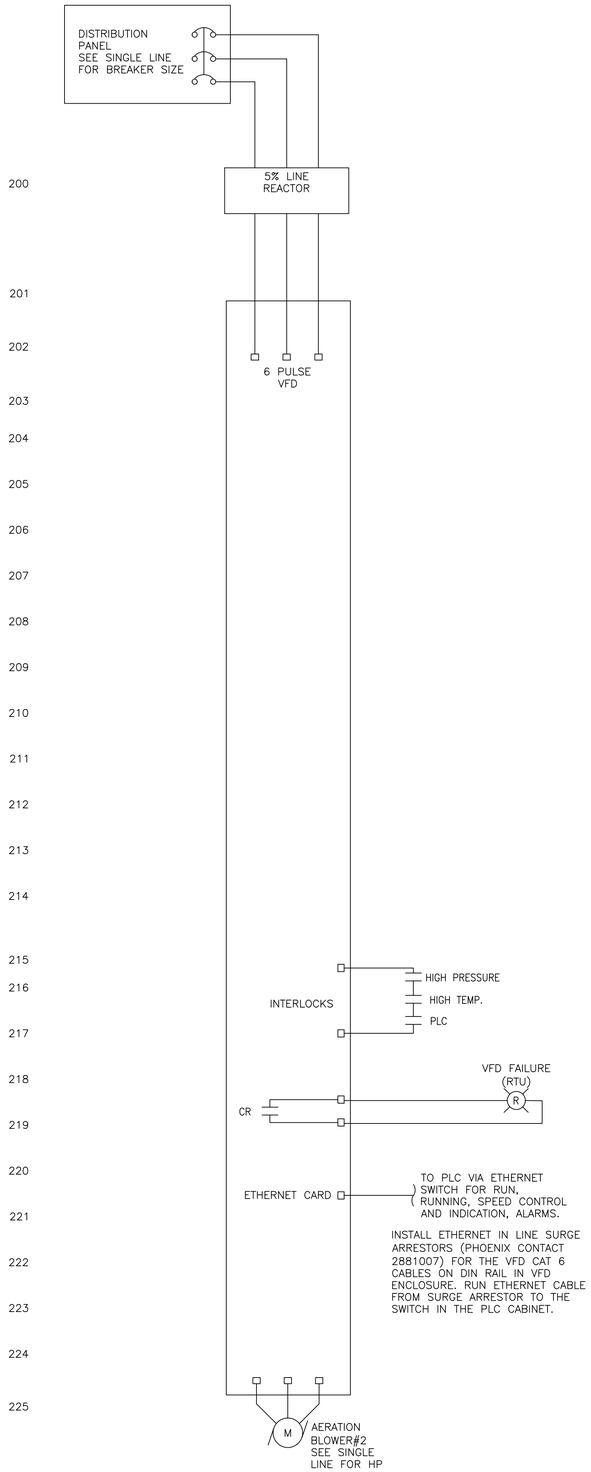

AERATION BLOWER #2 CONTROL SCHEMATIC

24VDC, 120VAC & 480VAC

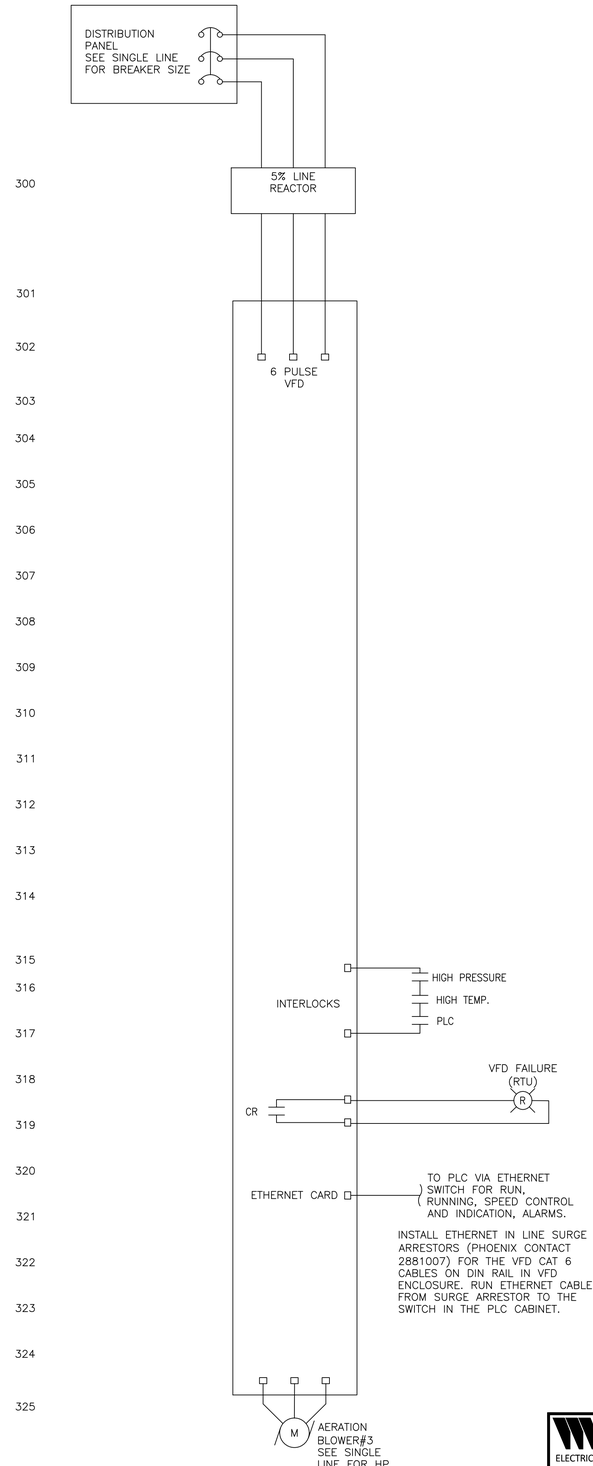

AERATION BLOWER #3 CONTROL SCHEMATIC

24VDC, 120VAC & 480VAC

NO	BY	DATE	REVISIONS	DATE	APP.

Registered Professional Engineer (Electrical) Certificate No. 73954 JAMES RILLETT DYER Date Signed 9-30-25 Expires 9-30-27

PREPARED BY: WRIGHT ENGINEERING
DESIGNED BY: JHB
DRAWN BY: XAG
CHECKED BY: JHB
DATE: NOV 2025
JOB NO.: B614
SCALE: AS NOTED

THESE DRAWINGS ARE THE PROPERTY OF P.A.C.E. AND SHALL NOT BE REPRODUCED IN ANY MANNER NOR BE USED FOR CONSTRUCTION UNLESS STAMPED "ISSUED FOR CONSTRUCTION".

TITLE
ELECTRICAL SCHEMATICS I

JOB
TOWN OF JEROME
WASTEWATER
TREATMENT PLANT
YAVAPAI CO. AZ

ISSUED FOR BID

PREPARED BY:
PACE
Advanced Water Engineering
8723 E. Via de Commercio, Suite A, Scottsdale, AZ 85258
P. (480) 991-3595 | www.pacewater.com

SHEET
E5.1
90 OF 99 SHEETS

JOB NO. B614

WRIGHT engineering corporation
ELECTRICAL ENGINEERING AND DESIGN
165 EAST CHILTON DRIVE
CHANDLER, ARIZONA 85225
PHONE: 480.497.5829
FAX: 480.497.5807
www.wrightengineering.us
Wright Project # 23319

CALL TWO WORKING DAYS BEFORE YOU DIG
602-263-1100
1-800-STAKE-IT
(OUTSIDE MARICOPA COUNTY)

I:\2025\2319-Jerome WWTP\2025\E5.1.dwg, 11x17, 1:1, jhebb on 11/20/25 at 2:56:48 PM

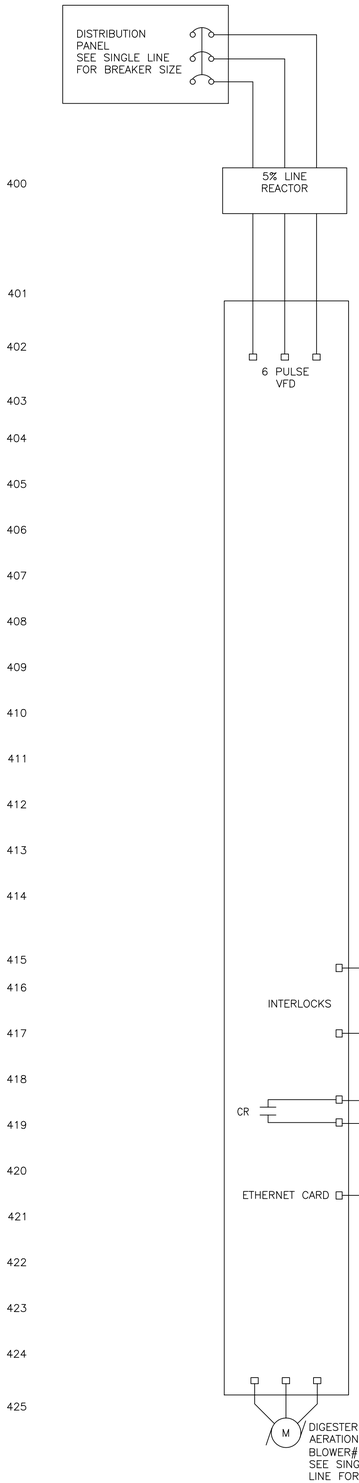

DIGESTER AERATION BLOWER #1 CONTROL SCHEMATIC

24VDC, 120VAC & 480VAC

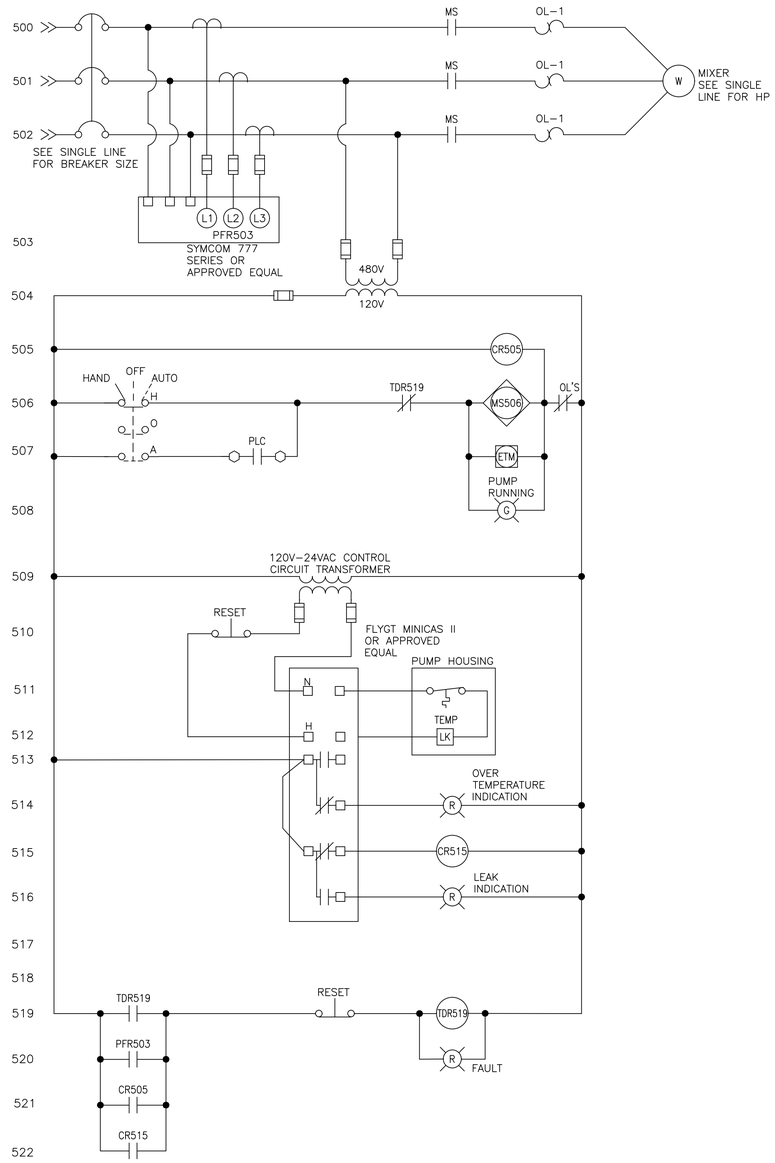

MIXER #1 CONTROL SCHEMATIC

120V

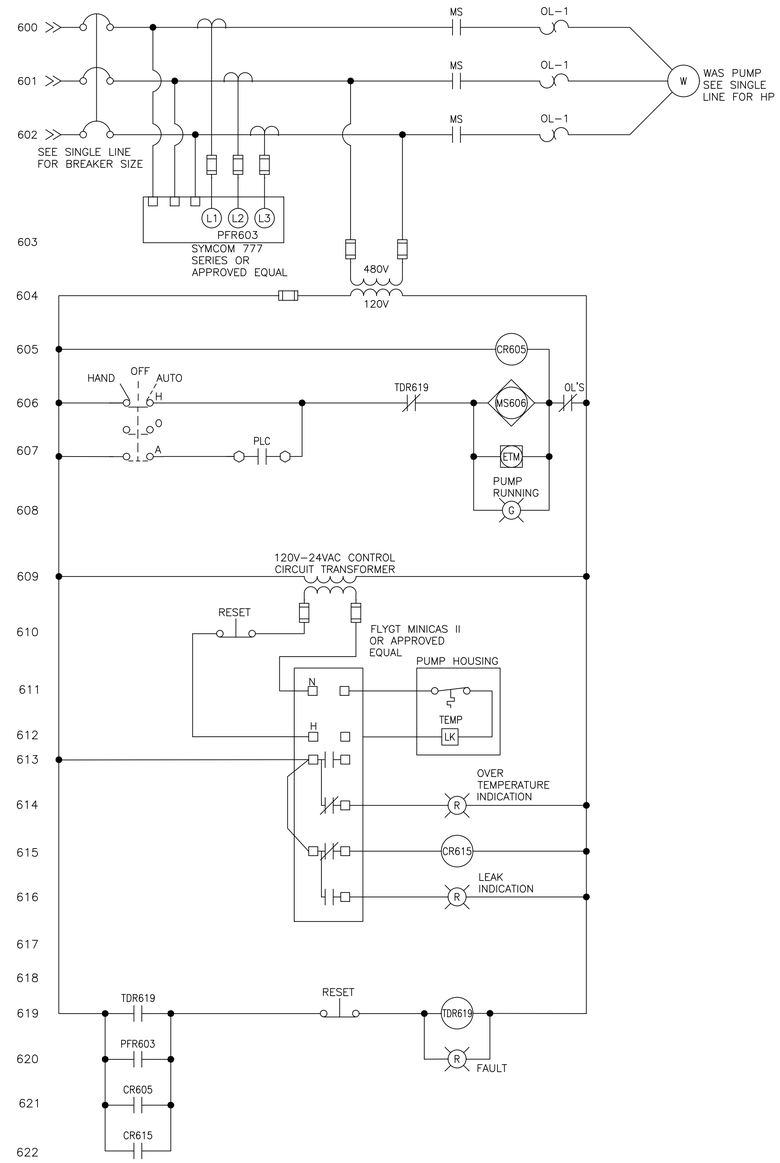

WAS PUMP #1 CONTROL SCHEMATIC

120V

NO	BY	DATE	REVISIONS	DATE	APP.

Registered Professional Engineer (Retired) Certificate No. 73954 JAMES BILLETDEAUX Date Signed 11-30-27 Expires 9-30-27

PREPARED BY: WRIGHT ENGINEERING
DESIGNED BY: JHB
DRAWN BY: XAG
CHECKED BY: JHB
SCALE: AS NOTED
DATE: NOV 2025
JOB NO.: B614

THESE DRAWINGS ARE THE PROPERTY OF P.A.C.E. AND SHALL NOT BE REPRODUCED IN ANY MANNER NOR BE USED FOR CONSTRUCTION UNLESS STAMPED "ISSUED FOR CONSTRUCTION".

TITLE
ELECTRICAL SCHEMATICS II

JOB
TOWN OF JEROME
WASTEWATER
TREATMENT PLANT
YAVAPAI CO. AZ

ISSUED FOR BID

PREPARED BY:
PACE
Advanced Water Engineering
8723 E. VIA de COMERCIO, SUITE A, SCOTTSDALE, CA 85258
P. (480) 991-3595 | www.pacewater.com

SHEET
E5.2
91 OF 99 SHEETS

JOB NO. B614

WRIGHT engineering corporation
ELECTRICAL ENGINEERING AND DESIGN
165 EAST CHILTON DRIVE
CHANDLER, ARIZONA 85225
PHONE: 480.497.5829
FAX: 480.497.5807
www.wrightengineering.us
Wright Project # 23319

CALL TWO WORKING DAYS BEFORE YOU DIG
602-263-1100
1-800-STAKE-IT
(OUTSIDE MARICOPA COUNTY)

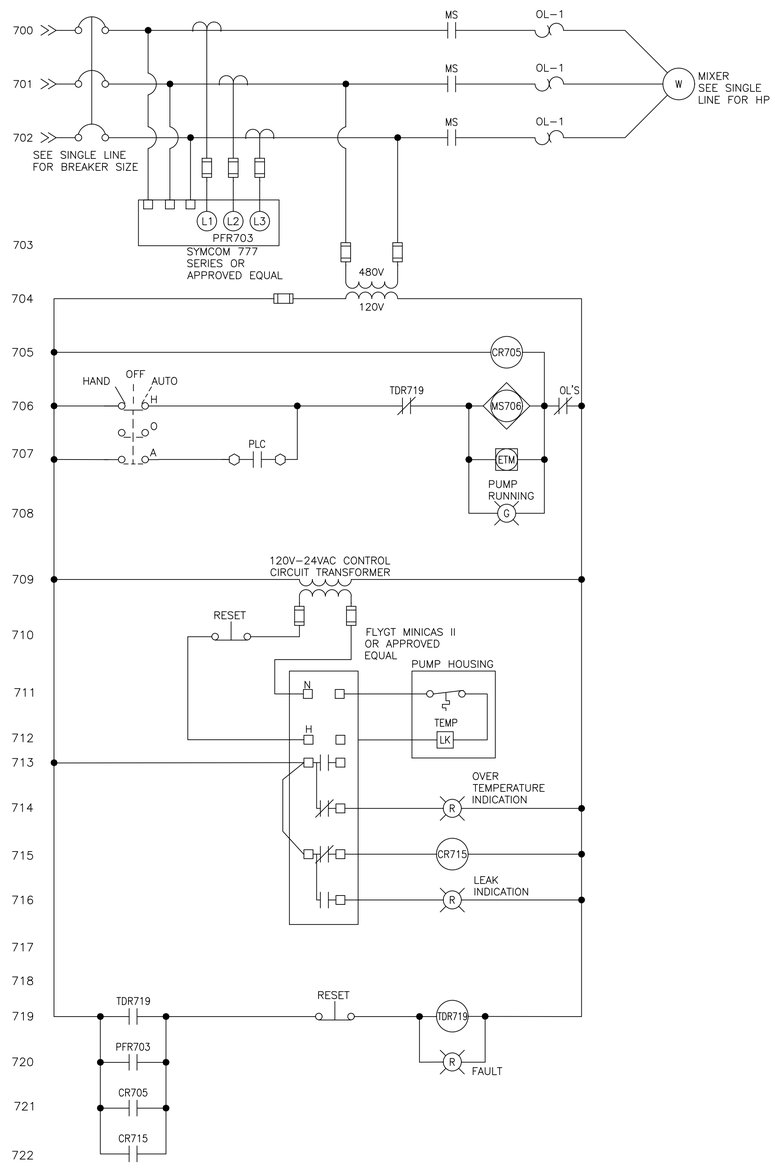

MIXER #2 CONTROL SCHEMATIC

120V

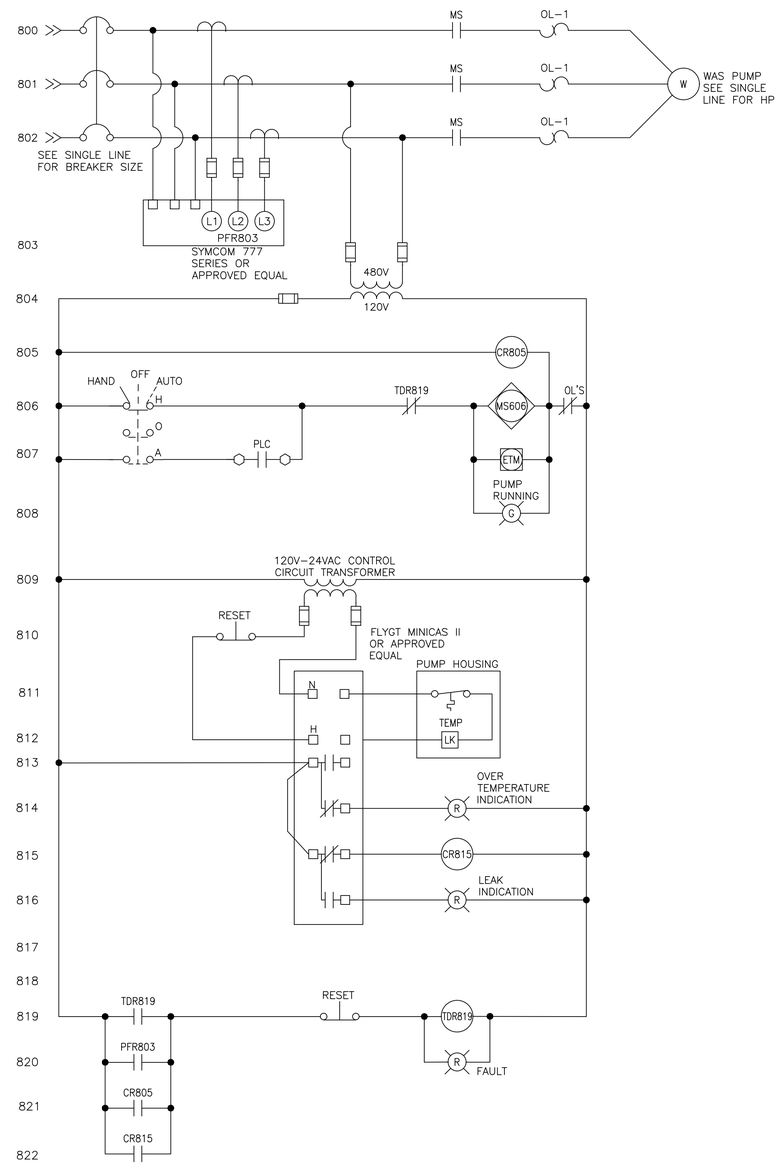

WAS PUMP #2 CONTROL SCHEMATIC

120V

NO	BY	DATE	REVISIONS	DATE	APP.

Registered Professional Engineer (Retired)
Certificate No. 73954
JASON
BILLESDON
Date Signed 9-30-25
Expires 9-30-27

PREPARED BY: WRIGHT ENGINEERING
DESIGNED BY: JHB
DRAWN BY: XAG
CHECKED BY: JHB
SCALE: AS NOTED
DATE: NOV 2025
JOB NO.: B614

THESE DRAWINGS ARE THE PROPERTY OF P.A.C.E. AND SHALL NOT BE REPRODUCED IN ANY MANNER NOR BE USED FOR CONSTRUCTION UNLESS STAMPED "ISSUED FOR CONSTRUCTION".

TITLE
ELECTRICAL SCHEMATICS III

JOB
TOWN OF JEROME
WASTEWATER
TREATMENT PLANT
YAVAPAI CO. AZ

ISSUED FOR BID

PREPARED BY:
PACE
Advanced Water Engineering
8723 E. VIA DE COMMERCIO, 1ST FLOOR, SCOTTSDALE, CA 85258
P.: (408) 991-3595 | www.pacewater.com

SHEET
E5.3
92 OF 99 SHEETS

JOB NO. B614

WRIGHT engineering corporation
ELECTRICAL ENGINEERING AND DESIGN
165 EAST CHILTON DRIVE
CHANDLER, ARIZONA 85225
PHONE: 480.497.5829
FAX: 480.497.5807
www.wrightengineering.us
Wright Project # 23319

CALL TWO WORKING DAYS
BEFORE YOU DIG
602-263-1100
1-800-STAKE-IT
(OUTSIDE MARICOPA COUNTY)

X:\2025\25-Current WWTP\25-15.dwg, Tab: E5.3, by pwood on 11/04/25 at 8:46:43 PM

INSTRUMENT IDENTIFICATION LETTERS (FSS)

	FIRST – LETTER (F)		SUCCEEDING – LETTERS (SS)		
	MEASURED OF INITIATING VARIABLE	MODIFIER	READOUT PASSIVE FUNCTION	OUTPUT FUNCTION	MODIFIER
A	ANALYSIS		ALARM		
B	BURNER, COMBUSTION		USER'S CHOICE	USER'S CHOICE	USER'S CHOICE
C	CONDUCTIVITY			CONTROLLER	
D	DENSITY	DIFFERENTIAL			
E	VOLTAGE		SENSOR, PRIMARY ELEMENT		
F	FLOW RATE	RATIO (FRACTION)			
G	GAUGE, GENERAL		GLASS VIEWING DEVICE		
H	HAND				HIGH, OPENED
I	CURRENT (ELEC.)		INDICATING, INDICATOR		
J	POWER		SCAN		
K	TIME, TIME SCHEDULE	TIME RATE OF CHANGE		CONTROL STATION	
L	LEVEL		LIGHT		LOW, CLOSED
M	MOISTURE, MOTION	MOMENTARY			MIDDLE
N	INTRUSION, STATUS	MOMENTARY	STATUS	USER'S CHOICE	USER'S CHOICE
O	OPERATOR, TORQUE		ORIFICE, RESTRICTION		USER'S CHOICE
P	PRESSURE, VACUUM		POINT (TEST) CONNECTION		
Q	QUANTITY	INTEGRATE, TOTALIZE			
R	RESET, RADIATION		RECORD OR PRINT		
S	SPEED, FREQUENCY	SAFETY		SWITCH	SLOW
T	TEMPERATURE			TRANSDUCER, TRANSMITTER	TEST
U	MULTIVARIABLE		MULTIFUNCTION	MULTIFUNCTION	MULTIFUNCTION
V	VIBRATION, MECH. ANALYSIS			VALVE, DAMPER LOUVER	
W	WEIGHT, FORCE		WELL		
X	SWITCH	X AXIS	UNCLASSIFIED	UNCLASSIFIED	UNCLASSIFIED
Y	EVENT, STATE, PRESENCE	Y AXIS	UNCLASSIFIED	RELAY, COMPUTE, CONVERT	
Z	POSITION DIMENSION	Z AXIS		DRIVER, ACTUATOR, UNCLASSIFIED FINAL CONTROL ELEMENT	

LINE NUMBERING

00" – INFLT – 001 (EXAMPLE)
- SEQUENTIAL LINE NO.
- FLUID CODE
- NOMINAL LINE SIZE

EQUIPMENT NUMBERING

F SS – PP T NN (EXAMPLE)
- ITEM NUMBER
- SERIES (TRAIN) LOCATION
- PROCESS LOCATION
- SUCCEEDING LETTERS (INSTRUMENT ID)
- FIRST LETTER (INSTRUMENT ID)

EXAMPLE:
LT-04032 = SBR TANK #2 LEVEL TRANSDUCER

PROCESS LOCATION (PP)

00	GENERAL/MISCELLANEOUS
01	FIELD
02	POTABLE WATER
03	HEADWORKS
04	SBR AERATION
05	SBR PROCESS
06	DISINFECTION
07	RETURN PS
08	DEWATERING

SERIES LOCATION (TT)

0	SHEET 0
1	SHEET 1
2	SHEET 2
3	SHEET 3
4	SHEET 4
5	SHEET 5
6	SHEET 6
7	SHEET 7
8	SHEET 8

FLUID CODE ABBREVIATION

BP	BYPASS
BW	BACKWASH
CDS	CHEMICAL DOSING
CVR	CONVEYOR
DR	DRAIN
EFFLT	EFFLUENT
EXH	EXHAUST/EXHAUST FAN
FA	FOUL AIR
FLTRT	FILTRATE
GRT	GRIT
INFLT	INFLUENT
MLSS	MIX LIQUOR
OF	OVERFLOW
PA	PROCESS AIR
PW	POTABLE WATER
RAS	RETURN ACTIVATED SLUDGE
RECYC	RECYCLE
RET	RETURN
RNS	RINSE
RW	RECLAIMED WATER
SECPR	SECONDARY PROCESS
SD	SLUDGE DISCHARGE
SNT	SUPERNATANT
SWR	SEWER
TERT	TERTIARY
TW	TREATED WATER
WAS	WASTE ACTIVATED SLUDGE
WTR	WATER
WW	WASTE WATER

EQUIPMENT NUMBERS

EQUIPMENT ABBREVIATIONS	# STARTING AT
PUMPS (PMP)	00–09
MOTORS (M/MXR/BLR)	10–19
VALVES (XV/V/SV)	20–29
LEVEL INST (LT/LS)	30–39
FLOW INST (FT/FS/FE/FIT)	40–49
PRESSURE INST (PT/PS/PG)	50–59
ANALYTICAL (AT)	60–69
MEMBRANE (SMU)	70–79
BUBBLE DIFFUSER (XBD)	80–85
MISCELLANEOUS (MISC)	90–99

LINE CODES

- MAJOR PROCESS LINE — 00"–XXX — LINE SIZE & NUMBER
- MINOR PROCESS LINE — PROCESS CONTINUATION WITHIN SCOPE
- AIR
- ELECTRICAL
- PLC TO HMI COMMUNICATION
- AUTO-DIALER AND PRIORITY LEVEL

INSTRUMENT NUMBERING

FSS NPPNNN – XX
- FIRST LETTER (INSTRUMENT ID)
- SUCCEEDING LETTERS (INSTRUMENT ID)
- XX – DEVICE FUNCTION
- EQUIPMENT NUMBER

LINE NUMBER GROUPS

000	OVERFLOW/ BYPASS/ DRAIN/ SUPERNATANT/SCNG
100	INFLUENT/ MIX LIQUOR/ SECONDARY EFFLUENT / EFFLUENT
200	TERTIARY/ REUSE WATER/ BACKWASH/ RECYCLE WATER
300	PERMEATE/ FILTRATE/ CENTRATE
400	PROCESS AIR
500	CHEMICAL DOSING/ POLYMER
600	FOUL AIR
700	WATER/ TREATED WATER/ FILTERED WATER
800	RAS/ SOLIDS
900	WAS/ SCUM/ WASTE WATER/ RAW WATER

EQUIPMENT SUPPLIED BY IDENTIFIER

✳ AQUA-AEROBICS

GENERAL INSTRUMENT OR FUNCTION SYMBOLS

	FIELD MOUNTED	PRIMARY LOCATION ACCESSIBLE TO OPERATOR	PRIMARY LOCATION INACCESSIBLE TO OPERATOR	AUXILIARY LOCATION ACCESSIBLE TO OPERATOR
DISCRETE INSTRUMENTS	○	⊖	⊖	⊖
SHARED DISPLAY SHARED CONTROL	○	⊖	⊖	⊖
COMPUTER FUNCTION	⬡	⬡	⬡	⬡
PROGRAMMABLE LOGIC CONTROL	◇	◇	◇	◇

HARDWARE INTERLOCK (I)

PLC "SOFT" INTERLOCK (I)

VALVE SYMBOLS

NC NO
- GATE VALVE
- GATE VALVE
- BALL VALVE
- DIAPHRAGM VALVE
- PLUG VALVE
- 3-WAY BALL VALVE
- NEEDLE VALVE/KNIFE GATE
- MUD VALVE
- FLANGED BUTTERFLY VALVE
- LUGGED BUTTERFLY VALVE
- CHECK VALVE
- DOUBLE LEAF CHECK VALVE
- WEIR GATE/TELESCOPE VALVE
- STOP LOG/GATE
- SLUICE/SLIDE GATE

VALVE ACTUATORS

- DIAPHRAGM ACTUATOR
- MOTOR ACTUATOR (M)
- SOLENOID ACTUATOR (S)
- CYLINDER ACTUATOR
- LEVER
- HAND WHEEL
- CHAIN WHEEL

RELIEF DEVICES

- AIR/PRESSURE RELIEF
- VACUUM RELIEF
- RUPTURE DISK FOR PRESSURE RELIEF
- RUPTURE DISK FOR VACUUM RELIEF

REGULATORS

- PRESSURE REDUCING
- BACK PRESSURE
- REGULATOR WITH EXTERNAL PILOT
- DIFFERENTIAL PRESSURE

PIPING SYMBOLS

- Y STRAINER
- BLIND FLANGE
- FUNNEL
- CONCENTRIC REDUCER
- ECCENTRIC REDUCER
- EDUCTOR
- WELDED CAP
- WELDED PIPE END
- SCREWED CAP
- UNION
- CAMLOCK FITTING
- FLEXIBLE LINE
- SPECTACLE BLIND
- EXPANSION JOINT
- TP XX — TIE-IN POINT
- FLEX JOINT

MECHANICAL EQUIPMENT

- METERING PUMP
- CENTRIFUGAL PUMP OR BLOWER
- SUBMERSIBLE PUMP
- TURBINE PUMP
- ROTARY BLOWER
- MIXER
- PROGRESSIVE CAVITY PUMP
- AERATOR
- EXHAUST FAN
- VERTICAL MULTI-STAGE PUMP
- ROTARY LOBE PUMP
- DECANTER
- ULTRA SONIC LEVEL TRANSMITTER
- CHEMICAL INJECTOR
- FLOW METER OR MOTOR
- ROTOMETER
- MAZZI INJECTOR
- VORTEX SHEDDING
- SONIC
- GRINDER
- STATIC MIXER
- SILENCER
- RADAR LEVEL TRANSMITTER
- AV SENSOR
- HORN/ STROBE LIGHT (H/S)

NOTE: ALL PRESSURE GAUGES AND OTHER SMALL PROCESS MECHANICAL INSTRUMENT EQUIPMENT SHALL BE SUPPLIED WITH ISOLATION VALVES AND ADDITIONAL APPURTENANCES (E.G. PRESSURE PULSATION DAMPENERS/SNUBBERS) AS REQUIRED FOR PROPER OPERATION

ABBREVIATIONS

ACP	ACCESS CONTROL PANEL	NTU	TURBIDITY
AE	ANALYTICAL SENSOR	OC	ODOR CONTROL
AI	ANALOG INPUT	OCA	OPEN–CLOSE–AUTO
AIT	ANALYTICAL INDICATOR TRANSMITTER	OCR	OPEN–CLOSE–REMOTE
AMP	AMPERE	OFS	OFF SPEC.
AO	ANALOG OUTPUT	OIT	OPERATOR INTERFACE TERMINAL
AT	ANALYTICAL TRANSMITTER	OO	ON/OFF (MAINTAINED)
ATS	AUTOMATIC TRANSFER SWITCH	OOA	ON–OFF–AUTO
AV	AIR VELOCITY	OOR	ON–OFF–REMOTE
BLR	BLOWER	OSC	OPEN–STOP–CLOSE
CB	CIRCUIT BREAKER	PE	PRESSURE SENSOR
CBL	COARSE BUBBLE DIFFUSER	PG	PRESSURE GAUGE
CE	CONDUCTIVITY SENSOR (TDS)	PH	POTENTIAL OF HYDROGEN
CFR	CHEMICAL FEEDER	PI	PRESSURE INDICATOR / PULSE INPUT
CG	COMBUSTIBLE GASES	PID	PROPORTIONAL–INTEGRAL–DERIVATIVE
CHV	CHECK VALVE	PIT	PRESSURE INDICATOR TRANSMITTER
CL2	CHLORINE	PLC	PROGRAMMABLE LOGIC CONTROLLER
CMP	COMPACTOR	PMP	PUMP
CON	CONVEYOR	PNL	PANEL
CWC	COMPACTOR/WASHER/CONVEYOR	PO	PULSE OUTPUT
DCS	DISTRIBUTED CONTROL SYSTEM	PPG	POUNDS PER GALLON
DI	DIGITAL INPUT	PPH	POUNDS PER HOUR
DO	DISSOLVED OXYGEN / DIGITAL OUTPUT	PPM	PARTS PER MILLION
DRY	BIOSOLIDS DRYER	PRESS	PRESSURE
DSS	DISTRIBUTION SWITCHBOARD SECTION	PRV	PRESSURE RELIEF OR REDUCING VALVE
DWG	DRAWING	PSH	PRESSURE SWITCH HIGH
EST	EMERGENCY STOP	PSI	POUNDS PER SQUARE INCH
ETM	ELAPSED TIME METER	PSL	PRESSURE SWITCH LOW
EXIST	EXISTING	PT	PRESSURE TRANSMITTER
FBD	FINE BUBBLE DIFFUSER	PV	PROCESS VARIABLE
FC	FAIL CLOSED	REM	REMOTE
FCV	MODULATING CONTROL VALVE	RF	RADIO FREQUENCY
FE	FLOW SENSOR	RIO	REMOTE INPUT–OUTPUT
FeCL2	FERROUS CHLORIDE	RST	RESET
FI	FLOW INDICATOR	RTU	REMOTE TELEMETRY UNIT
FIT	FLOW INDICATOR TRANSMITTER	SES	SERVICE ENTRANCE SECTION
FR	FORWARD–REVERSE	SG	SLUICE GATE
FS	FINE SCREEN / FULL SPEED	SLC	SINGLE LOOP CONTROLLER
FSL	FLOW SWITCH LOW	SLOS	START–LOCK–OFF–STOP
FT	FLOW TRANSMITTER	SO2	SULFUR D
GDR	GRINDER	SMU	SUBMERGED MEMBRANE UNIT
GPD	GALLONS PER DAY	SP	SETPOINT
GPH	GALLONS PER HOUR	SPD	SPEED
GPM	GALLONS PER MINUTE	SPR	SPARE
GRC	GRIT CLASSIFIER	SS	START/STOP (MAINTAINED)
H_2S	HYDROGEN SULFIDE	SSS	SOLID STATE STARTER (SOFT START)
HMI	HUMAN MACHINE INTERFACE	STG	MANUAL STOP GATE
HOA	HAND–OFF–AUTO	SUG	SLUICE GATE
HOR	HAND–OFF–REMOTE	SV	SOLENOID VALVE
JB	JUNCTION BOX	TC	TABLET CHLORINATOR
KGV	KNIFE GATE VALVE	TDS	TOTAL DISSOLVED SOLIDS
LAN	LOCAL AREA NETWORK	TE	TEMPERATURE SENSOR
LCP	LOCAL CONTROL PANEL	TG	TEMPERATURE GAUGE
LE	LEVEL SENSOR	TI	TEMPERATURE INDICATOR
LIT	LEVEL INDICATOR TRANSMITTER	TIT	TEMPERATURE INDICATOR TRANSMITTER
LOS	LOCK–OFF–STOP	TNK	TANK
LR	LOCAL / REMOTE	TS	TEMPERATURE SWITCH
LSH	LEVEL SWITCH HIGH	TSH	TEMPERATURE SWITCH HIGH
LSHH	LEVEL SWITCH HIGH HIGH	TT	TEMPERATURE TRANSMITTER
LSL	LEVEL SWITCH LOW	TV	TELESCOPING VALVE
LSLL	LEVEL SWITCH LOW LOW	UPS	UNINTERRUPTIBLE POWER SUPPLY
LSM	LEVEL SWITCH MEDIUM	UVU	ULTRAVIOLET UNIT
LT	LEVEL TRANSMITTER	V	MANUAL VALVE
MCAS	MINI CONTROL AND STATUS	VFD	VARIABLE FREQUENCY DRIVE
MCC	MOTOR CONTROL CENTER	WE	WEIR
ME	MOISTURE SENSOR	WEG	WEIR GATE
MGD	MILLION GALLONS PER DAY	WR	ADJUSTABLE WEIR
MGL	MILLIGRAM PER LITER	XV	AUTOMATED OPEN/CLOSE VALVE/GATE
MOT	MOTOR	ZS	SWITCH POSITION
MS	MOTOR STARTER		
MTU	MASTER TELEMETRY UNIT		
MXR	MIXER		
NaHSO3	SODIUM BISULFITE		
NaOCL	SODIUM HYPOCHLORITE		

NO	BY	DATE	REVISIONS	DATE	APP.

THESE DRAWINGS ARE THE PROPERTY OF P.A.C.E. AND SHALL NOT BE REPRODUCED IN ANY MANNER NOR BE USED FOR CONSTRUCTION UNLESS STAMPED "ISSUED FOR CONSTRUCTION".

Registered Professional Engineer (Civil) — CERTIFICATE NO. 70097 — Signed — ARIZONA, U.S.A. — Expires 12/31/28

PREPARED BY: PACE
DESIGNED BY: NE
DRAWN BY: DS, WW
CHECKED BY: TP
SCALE: AS NOTED
DATE: NOV 2025
JOB NO.: B614

TITLE: **P&ID GENERAL NOTES**

JOB: TOWN OF JEROME WASTEWATER TREATMENT PLANT — YAVAPAI CO. AZ

100% ISSUED FOR BID

PREPARED BY: TAYLOR B. PIERCE

PACE
Advanced Water Engineering
8723 E. Via de Ventura, Suite F-200, SCOTTSDALE, CA 85258
P: (480) 991-3995 | www.pacewater.com
R.C.E 70097 DATE

SHEET I0.0
93 OF 99 SHEETS

JOB NO. B614

AUTO-DIALER

PRIORITY NO. ALARM
NOTIFICATION

SCREEN

FAIL ALARM YA 03010

FAIL Y1 03010

HMI

HMI

FAIL Y1 03010

SBR CONTROL PANEL (VENDOR)

SBR CONTROL PANEL (VENDOR)

(480 VAC) CB

MCC

MCC

MS 03010 POT/HIM
HS 03010A HOA
MS 03010B POT/HIM
HS 03010B HOA
MS 03010C POT/HIM
HS 03010C HOA
G RUNNING
Y FAULT
ETM
HEADWORKS CONTROL PANEL

M-03010A
M-03010B
EST 03010A
EST 03010B
LE-03031
LE-03032
LE-03033
LE-03034

SEWER MAIN FROM COLLECTION SYSTEM — 12"-SWR-101

ROCK TRAP

8"-SWR-102

PV-03021
PV-03022

ZSO 03023
ZSC 03023
HS 03023
SV 03023

CLIMBER BAR SCREENS

10"-INFLT-103 — A SCREENED INFLUENT TO SBR REF SHT I1.1

POTABLE WATER FROM TOWN — 2"-WTR-701

S
V-02020

A DRYING BED LIFT STATION RETURN — 3"-DR RET-001
REF SHT I1.4

CV-07020

BV-07021

EST 03010C
M-03010C

1"-DR-005

DISPOSAL

HEADWORKS

W:\B614\Engineering\B614-30sheets\B614-I1.1.dwg - Tab: I1.0 - by naddington on 11/17/25 at 9:55:57 AM

NO	BY	DATE	REVISIONS	DATE	APP.

Registered Professional Engineer (Civil)
CERTIFICATE NO. 70097
TAYLOR B. PIERCE
Signed
ARIZONA, U.S.A.
Expires 12/31/28

PREPARED BY: PACE
DESIGNED BY: NE
DRAWN BY: DS, WW
CHECKED BY: TP
SCALE: AS NOTED
DATE: NOV 2025
JOB NO.: B614

THESE DRAWINGS ARE THE PROPERTY OF P.A.C.E. AND SHALL NOT BE REPRODUCED IN any MANNER NOR BE USED FOR CONSTRUCTION UNLESS STAMPED "ISSUED FOR CONSTRUCTION".

TITLE
HEADWORKS

JOB
TOWN OF JEROME
WASTEWATER
TREATMENT PLANT
YAVAPAI CO. AZ

100% ISSUED FOR BID

PREPARED BY:
TAYLOR B. PIERCE R.C.E 70097 DATE

PACE
Advanced Water Engineering
8723 E. Via de Ventura, Suite 130 | SCOTTSDALE, CA 85258
P: (480) 991-3995 | www.paceadvisor.com

SHEET
I1.0
94 OF 99 SHEETS

JOB NO. B614

AUTO-DIALER

PRIORITY NO. ALARM NOTIFICATION

SBR INFLUENT VALVE (1) | SBR #1 MIXER (2) | SBR #1 LEVEL (1)(1)(1)(1) | SBR #1 DO (2)(2) | WAS PUMP #1 (1) | DECANTER (1) | DECANT VALVE (1)

HMI

SBR CONTROL PANEL (VENDOR)

MCC

(120 VAC) CB (120 VAC) CB — CB

(480 VAC) CB

B — PROCESS AIR FROM BLOWER BUILDING — 4"-PA-402 — REF SHT I1.3

A — PROCESS AIR FROM BLOWER BUILDING — 4"-PA-401 — REF SHT I1.3

A — SCREENED INFLUENT FROM HEADWORKS — 10"-INFLT-103 — REF SHT I1.0

C — SUPERNATANT FROM AEROBIC DIGESTER — 6"-SNT-003 — REF SHT I1.2

SBR INFLUENT VALVE 1 — HS 05120, ZSO 05120, ZSC 05120, PV 05120 — PV-05120 — BFV-04326A, BFV-04326B (4"x3")

SBR INFLUENT VALVE 2 — HS 05122, ZSO 05122, ZSC 05122, PV 05122 — PV-05122 — BFV-04327A, BFV-04327B (4"x3")

SBR MIXER 1 MXR-05110 — ME 05110, TE 05110 (LEAK, TEMP)

SBR MIXER 2 MXR-05112 — ME 05112, TE 05112 (LEAK, TEMP)

SBR DECANTER 1 M-05111 — BFV 05121, ZSO 05121, ZSC 05121, HS 05121 — BFV-05121

SBR DECANTER 2 M-05113 — BFV 05123, ZSO 05123, ZSC 05123, HS 05123 — BFV-05123

3"-PA-404, 3"-PA-405, 3"-PA-406, 3"-PA-407

LE 05130, LSH 05131A, LSL 05131B, AT 05160A, AE 05160B DO

LE 05132, LSH 05133A, LSL 05133B, AT 05161A, AE 05161B DO

ME 05100, TE 05100 (LEAK, TEMP) — WAS PUMP 1 PMP-05100

ME 05101, TE 05101 (LEAK, TEMP) — WAS PUMP 2 PMP-05101

FBD-04180 — SBR 1 — V-08120 — PV-08122

FBD-04181 — SBR 2 — V-08121 — PV-08123

SAME AS SBR #1

2"-WAS-901 — A — WASTE SLUDGE TO AEROBIC DIGESTER — REF SHT I1.2

6"-EFFLT-104 — B — EFFLUENT TO SURGE BASIN — REF SHT I1.2

6"-OF-002 — C — OVERFLOW TO DRYING BED LIFT STATION — REF SHT I1.4

6"-WAS-902 — D — WASTE SLUDGE TO DEWATERING — REF SHT I1.4

SEQUENCING BATCH REACTOR

NO	BY	DATE	REVISIONS	DATE	APP.

Registered Professional Engineer (Civil) — CERTIFICATE NO. 70097 — Timothy B. Pierce — Signed — ARIZONA, U.S.A. — Expires 12/31/28

THESE DRAWINGS ARE THE PROPERTY OF P.A.C.E. AND SHALL NOT BE REPRODUCED IN ANY MANNER NOR BE USED FOR CONSTRUCTION UNLESS STAMPED 'ISSUED FOR CONSTRUCTION'.

PREPARED BY: PACE
DESIGNED BY: NE
DRAWN BY: DS, WW
CHECKED BY: TP
SCALE: AS NOTED
DATE: NOV 2025
JOB NO.: B614

TITLE: SEQUENCING BATCH REACTOR

JOB: TOWN OF JEROME WASTEWATER TREATMENT PLANT — YAVAPAI CO. AZ

100% ISSUED FOR BID

PREPARED BY: TAYLOR B. PIERCE — R.C.E. 70097 — DATE
PACE — Advanced Water Engineering — 8723 E. VIA DE COMMERCIO, BLDG. A, SUITE 1, SCOTTSDALE, CA 85258 — P: (480) 991-3595 | www.pacewater.com

SHEET I1.1
95 OF 99 SHEETS

JOB NO. B614

W:\B614\Engineering\B614-30sheet\B614I1.1.dwg - Tab: I1.1 - by neddington on 11/17/25 at 8:55:57 AM

AUTO-DIALER

PRIORITY NO. ALARM NOTIFICATION

SURGE BASIN LEVEL

EFFLUENT FLOW METER

EFFLUENT DISCHARGE VALVE

DIGESTER LEVEL SWITCHES

HMI

SBR CONTROL PANEL (VENDOR)

MCC

(120 VAC) CB

(480 VAC) CB

C PROCESS AIR FROM BLOWER BUILDING 2"-PA-403 REF SHT I1.3

A WASTE SLUDGE FROM SBR 2"-WAS-901 REF SHT I1.1

B EFFLUENT FROM SBR 6"-EFFLT-104 REF SHT I1.1

6"-EFFLT-105

PV-06220

FM-06240

BFV-06221

TAB-06290

CHLORINATION TABLET FEEDER

SURGE BASIN

CHLORINE CONTACT BASIN

V-06222 (WEIR SLIDE GATE)

DECHLORINATION TABLET FEEDER

TAB-06291

6"-EFFLT-106

— TREATED EFFLUENT TO BITTER CREEK

AEROBIC DIGESTER

CBD-04280

V-08220

PV-08221

V-05220

6"-SNT-003

C SUPERNATANT TO SBR 1 REF SHT I1.1

6"-SD-801

A DIGESTED SLUDGE TO DEWATERING REF SHT I1.4

CHLORINE CONTACT AND DIGESTER

100% ISSUED FOR BID

PREPARED BY: TAYLOR B. PIERCE

PACE
Advanced Water Engineering
8723 E. Via de Commercio, Suite 1-4, SCOTTSDALE, CA 85258
P: (408) 991-3595 | www.pacewater.com
R.C.E 70097 DATE

TITLE: CHLORINE CONTACT & DIGESTER

JOB: TOWN OF JEROME WASTEWATER TREATMENT PLANT YAVAPAI CO. AZ

Registered Professional Engineer (Civil) CERTIFICATE NO. 70097 TAYLOR B. PIERCE Signed ARIZONA, U.S.A. Expires 12/31/28

PREPARED BY:	PACE
DESIGNED BY:	NE
DRAWN BY:	DS, WW
CHECKED BY:	TP
SCALE:	AS NOTED
DATE	NOV 2025
JOB NO.	B614

NO	BY	DATE	REVISIONS	DATE	APP.

THESE DRAWINGS ARE THE PROPERTY OF P.A.C.E. AND SHALL NOT BE REPRODUCED IN ANY MANNER NOR BE USED FOR CONSTRUCTION UNLESS STAMPED "ISSUED FOR CONSTRUCTION".

SHEET I1.2

96 OF 99 SHEETS

JOB NO. B614

W:\B614\Engineering\B614-Sheets\B614-I1.1.dwg - Tab: I1.2 - by reddington on 11/17/25 at 9:55:57 AM

AUTO-DIALER

PRIORITY NO. ALARM NOTIFICATION

AERATION BLOWER #1 | AERATION BLOWER #2 | AERATION BLOWER #3 | DIGESTER BLOWER #1 | SBR #1 AIR VALVE | SBR #2 AIR VALVE

HMI

SBR CONTROL PANEL (VENDOR)

MCC

NOTE:
CONTRACTOR TO REVIEW SHOP DRAWINGS FROM EQUIPMENT MANUFACTURER FOR SIZE, NUMBER AND SCOPE OF SUPPLY OF VALVES AND INSTRUMENTS.

BLR-04310 BLOWER 1 | BLR-04311 BLOWER 2 | BLR-04312 BLOWER 3 | BLR-04313 BLOWER 4

AMBIENT AIR | ENCLOSURE AIR FILTER | BLOW OFF VALVE | CV-04320A | CV-04321A | CV-04322A | CV-04323A | BFV-04320B | BFV-04321B | BFV-04322B | BFV-04523B | BFV-04524 | BFV-04325A | BFV-04325B

4"-PA-401 A PROCESS AIR TO SBR 1 REF SHT I1.1

4"-PA-402 B PROCESS AIR TO SBR 2 REF SHT I1.1

2"-PA-403 C PROCESS AIR TO AEROBIC DIGESTER REF SHT I1.2

BLOWER ROOM

NO	BY	DATE	REVISIONS	DATE	APP.

Registered Professional Engineer (Civil) CERTIFICATE NO. 70097 Timothy B. Pierce Signed ARIZONA U.S.A. Expires 12/31/28

THESE DRAWINGS ARE THE PROPERTY OF P.A.C.E. AND SHALL NOT BE REPRODUCED IN ANY MANNER NOR BE USED FOR CONSTRUCTION UNLESS STAMPED 'ISSUED FOR CONSTRUCTION'.

PREPARED BY: PACE
DESIGNED BY: NE
DRAWN BY: DS, WW
CHECKED BY: TP
SCALE: AS NOTED
DATE: NOV 2025
JOB NO.: B614

TITLE: BLOWER ROOM

JOB: TOWN OF JEROME WASTEWATER TREATMENT PLANT — YAVAPAI CO. AZ

100% ISSUED FOR BID

PREPARED BY: TAYLOR B. PIERCE — R.C.E 70097 — DATE

PACE
Advanced Water Engineering
8723 E. Via de Commercio, Suite 104 | SCOTTSDALE, CA 85258
P. (480) 991-3995 | www.pacewater.com

SHEET I1.3
97 OF 99 SHEETS

JOB NO. B614

W:\B614\Engineering\B614-30\sheets\B614-I1.1.dwg - Tab: I1.3 - by reddington on 11/17/25 at 9:35:57 AM

AUTO-DIALER

PRIORITY NO. ALARM
NOTIFICATION

DEWATERING FEED PUMP

SLUDGE FEED VALVE

DRYING BED LIFT STATION PUMPS

FAIL ALARM YA 08400

RUNNING Y1 08400

RUN YC 08400

FAIL ALARM YA 08420B

OPEN Y1 08420B

FAIL ALARM YA 07400A

FAIL ALARM YA 07400B

RUNNING Y1 07400A

RUNNING Y1 07400B

HMI

CLOSE YC 08420B

OPEN Y1 08420B

DI

DO

(120 VAC)

CB

SBR CONTROL PANEL (VENDOR)

(480VAC)

(120 VAC)

MCC

MS 08400

HS 08400 HOA

G RUNNING

ETM

Y FAULT

SLUDGE BAGGING SYSTEM CONTROL PANEL

MS 07400A

HS 07400A HOA

MS 07400B

HS 07400B HOA

DRYING BED LIFT STATION CONTROL PANEL

HS 07401 HO

OVERFLOW LIFT STATION CONTROL PANEL

C OVERFLOW FROM SBR REF SHT I1.1

8"-OF-002

ARV-07422

3"-DR RET-001

A OVERFLOW RETURN TO HEADWORKS REF SHT I1.0

A DIGESTED SLUDGE FROM DIGESTER REF SHT I1.2

6"-SD-801

D WASTE SLUDGE FROM SBR 1 & 2 REF SHT I1.1

6"-WAS-902

PV-08421

6"x4"

PV-08420A

ZSO 08420B

ZSC 08420B

XV 08420B

M

PV-08422A

PV-08422B

SLUDGE DRYING BEDS

DISPOSAL

4"-FLTRT-302

LSHH 07430A

LSH 07430B

LSL 07430C

CV-07420A

V-07420B

CV-07421A

V-07421B

PMP-07400A

PMP-07400B

DRYING BED LIFT STATION

4"-OF-003

EMERGENCY OVERFLOW BASIN

4"-WAS-903

PV-08420B

PMP-08400

BV-08423

SLUDGE BAGGING UNIT BAG-08490

DISPOSAL

4"-FLTRT-301

ARV-07425

2"-OF RET-004

BV-07424

CV-07423

4"-OF-004

LSHH 07431A

LSL 07431B

PMP-07401

OVERFLOW LIFT STATION

MXR-08410

BV-08425

CV-08424

— POTABLE WATER FROM TOWN

2"-PW-702

V-02420

1"-CDS-501

PMP-08401

DRY POLYMER MIXING UNIT

DEWATERING AND LIFT STATIONS

100% ISSUED FOR BID

PREPARED BY: TAYLOR B. PIERCE

PACE
Advanced Water Engineering
8723 E. Via de Commercio, Suite A-1, Scottsdale, CA 85258
P: (480) 991-3595 | www.pacewater.com

R.C.E 70097 DATE

TITLE: DEWATERING & LIFT STATIONS

JOB: TOWN OF JEROME
WASTEWATER
TREATMENT PLANT
YAVAPAI CO. AZ

SHEET I1.4
98 OF 99 SHEETS

JOB NO. B614

NO	BY	DATE	REVISIONS	DATE	APP.

Registered Professional Engineer (Civil) CERTIFICATE NO. 70097 Timothy B. Pierce Signed ARIZONA, U.S.A. Expires 12/31/28

PREPARED BY: PACE
DESIGNED BY: NE
DRAWN BY: DS, WW
CHECKED BY: TP
SCALE: AS NOTED
DATE: NOV 2025
JOB NO.: B614

THESE DRAWINGS ARE THE PROPERTY OF P.A.C.E. AND SHALL NOT BE REPRODUCED IN ANY MANNER NOR BE USED FOR CONSTRUCTION UNLESS STAMPED 'ISSUED FOR CONSTRUCTION'.

V:\B614\Engineering\B614-30\sheets\B614-I1.1.dwg - Tab: I1.4 - by raddington on 11/17/25 at 9:55:57 AM

AUTO-DIALER

PRIORITY NO. ALARM NOTIFICATION

ATS

GENERATOR

FAULT ALARM YA 01003

LOW ALARM YA 01003

UTILITY SWITCH POSITION YI 01001

FAULT YI 01003

OFF / RUNNING YI 01003

LOW FUEL LEVEL YI 01003

HMI

SBR CONTROL PANEL (VENDOR)

DI

RUN R

FAIL A

I

MCC

(480 VAC) CB

LOCATED ON GENERATOR

ANNUNCIATOR

SWITCH POSITION

DI 01002

DO 01002

GEN RUN

EST 01000

ON-BOARD POWER ZONE

POWER FROM APS

TRANSFORMER (BY UTILITY)

POWER TO

SES

ATS

CALL

GENERATOR

POWER TO

SES, ATS, AND STAND-BY GENERATOR

NO	BY	DATE	REVISIONS	DATE	APP.

Registered Professional Engineer (Civil) CERTIFICATE NO. 70097 Timothy B. Pierce Signed ARIZONA, U.S.A. Expires 12/31/28

THESE DRAWINGS ARE THE PROPERTY OF P.A.C.E. AND SHALL NOT BE REPRODUCED IN ANY MANNER NOR BE USED FOR CONSTRUCTION UNLESS STAMPED 'ISSUED FOR CONSTRUCTION'.

PREPARED BY: PACE
DESIGNED BY: NE
DRAWN BY: DS, WW
CHECKED BY: TP
SCALE: AS NOTED
DATE: NOV 2025
JOB NO.: B614

TITLE: GENERATOR

JOB: TOWN OF JEROME WASTEWATER TREATMENT PLANT — YAVAPAI CO. AZ

100% ISSUED FOR BID

PREPARED BY: TAYLOR B. PIERCE R.C.E. 70097 DATE

PACE
Advanced Water Engineering
8723 E. VIA DE VENTURA, SUITE A-100, SCOTTSDALE, CA 85258
P: (480) 991-3595 | www.pacewater.com

SHEET I1.5
99 OF 99 SHEETS

JOB NO. B614

W:\B614\Engineering\B614-30sheets\B614I1.1.dwg - Tab: I1.5 - by neddington on 11/17/25 at 8:55:57 AM

BID FORM FOR CONSTRUCTION CONTRACT
ADDENDUM 2 VERSION

Contractor Name: _____

The terms used in this Bid with initial capital letters have the meanings stated in the Instructions to Bidders, the General Conditions, and the Supplementary Conditions.

ARTICLE 1—OWNER AND BIDDER

1.01 This Bid is submitted to:

Town of Jerome
Submitted electronically via email to tpierce@pacewater.com. Alternatively, Bidder may submit a hard copy the Town of Jerome, 600 Clark Street, Jerome, AZ 86331.

The undersigned Bidder proposes and agrees, if this Bid is accepted, to enter into an Agreement with Owner in the form included in the Bidding Documents to perform all Work as specified or indicated in the Bidding Documents for the prices and within the times indicated in this Bid and in accordance with the other terms and conditions of the Bidding Documents.

ARTICLE 2—ATTACHMENTS TO THIS BID

2.01 The following documents are submitted with and made a condition of this Bid:

A. Required Bid security;

B. List of Proposed Subcontractors;

~~C. List of Proposed Suppliers;~~

D. Evidence of authority to do business in the state of the Project; or a written covenant to obtain such authority within the time for acceptance of Bids;

E. Contractor's license number as evidence of Bidder's State Contractor's License or a covenant by Bidder to obtain said license within the time for acceptance of Bids;

F. Required Bidder Qualification Statement with supporting data; ~~and~~

G. If Bid amount exceeds $10,000, signed Compliance Statement (RD 400-6). Refer to specific equal opportunity requirements set forth in the Supplementary Conditions of the Construction Contract (EJCDC C-800);

H. If Bid amount exceeds $25,000, signed Certification Regarding Debarment, Suspension, Ineligibility and Voluntary Exclusion - Lower Tier Covered Transactions (AD-1048);

I. If Bid amount exceeds $100,000, signed RD Instruction 1940-Q Exhibit A-1, Certification for Contracts, Grants, and Loans.

ARTICLE 3—BASIS OF BID—LUMP SUM BID AND UNIT PRICES

3.01 *Lump Sum Bids*

A. Bidder will complete the Work in accordance with the Contract Documents for the following lump sum (stipulated) price(s), together with any Unit Prices indicated in Paragraph 3.02:

Copyright© 2018 National Society of Professional Engineers, American Council of Engineering Companies, and American Society of Civil Engineers. All rights reserved.

1. Lump Sum Price (Base Bid and Alternates)

BASE BID LUMP SUM BREAKDOWN					
	Item Description	**Unit**	**Estimated Qty**	**Bid Unit Price**	**Total Bid Price**
1	**ACCESS ROAD & SITE WORK**				
1.1	SWPPP	LS	1	$	$
1.2	Access Road (cut, grading, paving)	CY	3,672	$	$
1.3	Roadway Appurtenance (guardrail, gates, catch basins)	LS	1	$	$
1.4	Traffic Control	LS	1	$	$
2	**12" SEWER LINE IMPROVEMENTS**				
2.1	12" FPVC New Sewer Main	LF	149	$	$
2.2	Sewer Road Alignment Cut to Fill	CY	498	$	$
2.3	48" Manholes	EA	2	$	$
2.4	Bypass Plumbing and Equipment	LS	1	$	$
3	**TREATMENT PLANT SITE**				
3.1	Survey, Staking & Materials Testing	LS	1	$	$
3.2	Clearing & Grubbing	LS	1	$	$
3.3	Earthwork (Shoring, Erosion Control & Final Site Grading)	LS	1	$	$
3.4	Earthwork (Excavation, Fill & Backfill)	CY	1,628	$	$
3.5	Yard Piping	LS	1	$	$

Copyright© 2018 National Society of Professional Engineers, American Council of Engineering Companies, and American Society of Civil Engineers. All rights reserved.

BASE BID LUMP SUM BREAKDOWN					
	Item Description	**Unit**	**Estimated Qty**	**Bid Unit Price**	**Total Bid Price**
3.6	Fencing	LF	150	$	$
3.7	Blower / Admin Building	SF	528	$	$
3.8	Reed Bed Conversion to Drying Beds	LS	1	$	$
3.9	Wetland Cells Conversion to Emergency Overflow	LS	1	$	$
3.10	Retaining Walls	LF	295	$	$
3.11	Structural Concrete (SBR Tanks, Site, Chlorine Contact Channel)	CY	275	$	$
3.12	SBR Equipment	LS	1	$	$
3.13	Headworks Equipment	LS	1	$	$
3.14	Sludge Bagging Unit	LS	1	$	$
3.15	Polymer Dosing System	LS	1	$	$
3.16	Sludge Feed Pump	LS	1	$	$
3.17	Shade Structure	LS	1	$	$
3.18	Disinfection & Miscellaneous Equipment	LS	1	$	$
3.19	Site Electrical and Standby Generator	LS	1	$	$

Copyright© 2018 National Society of Professional Engineers, American Council of Engineering Companies, and American Society of Civil Engineers. All rights reserved.

BASE BID LUMP SUM BREAKDOWN					
	Item Description	**Unit**	**Estimated Qty**	**Bid Unit Price**	**Total Bid Price**
3.20	Upgrade Site to 3 Phase Power	LS	1	$	$
4	**OTHER**				
4.1	Mobilization/Demobilization	LS	1	$	$
4.2	Taxes	LS	1	$	$
				TOTAL BASE BID LUMP SUM AMOUNT	$

BID ALTERNATES LUMP SUM BREAKDOWN					
NEW 12" SEWER AND ACCESS ROAD					
	Item Description	**Unit**	**Estimated Qty**	**Bid Unit Price**	**Total Bid Price**
1	**Bid Adder:** 12" FPVC New Sewer Main	LF	1,660	$	$
2	**Bid Adder:** Restore Lateral Connections	EA	5	$	$
3	**Bid Adder:** Sewer Road Alignment Cut to Fill	CY	4,010	$	$
4	**Bid Adder:** 48" Manholes	EA	10	$	$
5	**Bid Adder:** Rockfall Barrier	LF	150	$	$
				TOTAL ALTERNATES LUMP SUM AMOUNT	

Copyright© 2018 National Society of Professional Engineers, American Council of Engineering Companies, and American Society of Civil Engineers. All rights reserved.

TOTAL LUMP SUM PRICE (BASE BID AND ALTERNATES)		
	Item Description	**Total Bid Price**
1	Total Lump Sum for Base Bid	$
2	Total Lump Sum for Bid Adder: New 12" Sewer and Access Road	$
	TOTAL LUMP SUM BASE BID AND ALTERNATES PRICE	$

B. All specified cash allowance(s) are included in the price(s) set forth below, and have been computed in accordance with Paragraph 13.02 of the General Conditions.

TOTAL ALLOWANCE PRICE		
	Item Description	**Total Bid Price**
1	Materials Testing	$
	TOTAL ALLOWANCE PRICE	$

ARTICLE 4—DELETED

ARTICLE 5—DELETED

ARTICLE 6—TIME OF COMPLETION

6.01 Bidder agrees that the Work will be substantially complete and will be completed and ready for final payment in accordance with Paragraph 15.06 of the General Conditions on or before the dates or within the number of calendar days indicated in the Agreement.

6.02 **[Deleted]**

6.03 **[Deleted]**

6.04 Bidder accepts the provisions of the Agreement as to liquidated damages.

ARTICLE 7—BIDDER'S ACKNOWLEDGEMENTS: ACCEPTANCE PERIOD, INSTRUCTIONS, AND RECEIPT OF ADDENDA

7.01 *Bid Acceptance Period*

A. This Bid will remain subject to acceptance for 60 days after the Bid opening, or for such longer period of time that Bidder may agree to in writing upon request of Owner.

Copyright© 2018 National Society of Professional Engineers, American Council of Engineering Companies, and American Society of Civil Engineers. All rights reserved.

7.02 *Instructions to Bidders*

A. Bidder accepts all of the terms and conditions of the Instructions to Bidders, including without limitation those dealing with the disposition of Bid security.

7.03 *Receipt of Addenda*

A. Bidder hereby acknowledges receipt of the following Addenda:

Addendum Number	Addendum Date

7.04 **[Deleted]**

ARTICLE 8—BIDDER'S REPRESENTATIONS AND CERTIFICATIONS

8.01 *Bidder's Representations*

A. In submitting this Bid, Bidder represents the following:

1. Bidder has examined and carefully studied the Bidding Documents, including Addenda.

2. **[Deleted]**

3. Bidder is familiar with all Laws and Regulations that may affect cost, progress, and performance of the Work**, including all American Iron and Steel requirements.**

4. Bidder has carefully studied the reports of explorations and tests of subsurface conditions at or adjacent to the Site and the drawings of physical conditions relating to existing surface or subsurface structures at the Site that have been identified in the Supplementary Conditions, with respect to the Technical Data in such reports and drawings.

5. Bidder has carefully studied the reports and drawings relating to Hazardous Environmental Conditions, if any, at or adjacent to the Site that have been identified in the Supplementary Conditions, with respect to Technical Data in such reports and drawings.

6. Bidder has considered the information known to Bidder itself; information commonly known to contractors doing business in the locality of the Site; information and observations obtained from visits to the Site; the Bidding Documents; and the Technical Data identified in the Supplementary Conditions or by definition, with respect to the effect of such information, observations, and Technical Data on (a) the cost, progress, and performance of the Work; (b) the means, methods, techniques, sequences, and procedures of construction to be employed by Bidder, if selected as Contractor; and (c) Bidder's (Contractor's) safety precautions and programs.

7. Based on the information and observations referred to in the preceding paragraph, Bidder agrees that no further examinations, investigations, explorations, tests, studies,

Copyright© 2018 National Society of Professional Engineers, American Council of Engineering Companies, and American Society of Civil Engineers. All rights reserved.

or data are necessary for the performance of the Work at the Contract Price, within the Contract Times, and in accordance with the other terms and conditions of the Contract.

8. Bidder is aware of the general nature of work to be performed by Owner and others at the Site that relates to the Work as indicated in the Bidding Documents.

9. Bidder has given Engineer written notice of all conflicts, errors, ambiguities, or discrepancies that Bidder has discovered in the Bidding Documents, and of discrepancies between Site conditions and the Contract Documents, and the written resolution thereof by Engineer is acceptable to Contractor.

10. The Bidding Documents are generally sufficient to indicate and convey understanding of all terms and conditions for performance and furnishing of the Work.

11. The submission of this Bid constitutes an incontrovertible representation by Bidder that without exception the Bid and all prices in the Bid are premised upon performing and furnishing the Work required by the Bidding Documents.

8.02 *Bidder's Certifications*

A. The Bidder certifies the following:

1. This Bid is genuine and not made in the interest of or on behalf of any undisclosed individual or entity and is not submitted in conformity with any collusive agreement or rules of any group, association, organization, or corporation.

2. Bidder has not directly or indirectly induced or solicited any other Bidder to submit a false or sham Bid.

3. Bidder has not solicited or induced any individual or entity to refrain from bidding.

4. Bidder has not engaged in corrupt, fraudulent, collusive, or coercive practices in competing for the Contract. For the purposes of this Paragraph 8.02.A:

a. Corrupt practice means the offering, giving, receiving, or soliciting of anything of value likely to influence the action of a public official in the bidding process.

b. Fraudulent practice means an intentional misrepresentation of facts made (a) to influence the bidding process to the detriment of Owner, (b) to establish bid prices at artificial non-competitive levels, or (c) to deprive Owner of the benefits of free and open competition.

c. Collusive practice means a scheme or arrangement between two or more Bidders, with or without the knowledge of Owner, a purpose of which is to establish bid prices at artificial, non-competitive levels.

d. Coercive practice means harming or threatening to harm, directly or indirectly, persons or their property to influence their participation in the bidding process or affect the execution of the Contract.

Copyright© 2018 National Society of Professional Engineers, American Council of Engineering Companies, and American Society of Civil Engineers. All rights reserved.

BIDDER hereby submits this Bid as set forth above:

Bidder:

_____

(typed or printed name of organization)

By: _____

(individual's signature)

Name: _____

(typed or printed)

Title: _____

(typed or printed)

Date: _____

(typed or printed)

If Bidder is a corporation, a partnership, or a joint venture, attach evidence of authority to sign.

Attest: _____

(individual's signature)

Name: _____

(typed or printed)

Title: _____

(typed or printed)

Date: _____

(typed or printed)

Address for giving notices:

_____

_____

Bidder's Contact:

Name: _____

(typed or printed)

Title: _____

(typed or printed)

Phone: _____

Email: _____

Address:

_____

_____

_____

Bidder's Contractor License No.: (if applicable) _____

Copyright© 2018 National Society of Professional Engineers, American Council of Engineering Companies, and American Society of Civil Engineers. All rights reserved.

PACE
Advanced Water Engineering

Jerome Wastewater Treatment Plant Improvements

ADDENDUM #3

Date: May 20, 2026

Quest CDN #9117808

This addendum is to formally issue responses to bidder questions and minor modifications. Reminder: Acknowledge receipt of this addendum on the Bid Form.

Attachments:

1. Attachment 1 – Pre-Bid Meeting Sign-In Sheet
2. Attachment 2 – Property Boundary Survey Map
3. Attachment 3 – USDA-RD Letter of Conditions
4. Attachment 4 – Douglas Rd Easement Exhibit

Questions

1. Do prevailing wages apply to this project?

   Response: *Prevailing wages do not apply to this project.*

2. Will there be any coatings on the concrete basins?

   Response: *Coatings are not required in the proposed treatment basins.*

3. Will the Town pay for stored material?

   Response: *Yes, the pay application form that will be used accounts for and allows payment/tracking of stored materials.*

4. What is the engineer's cost estimate?

   Response: *The engineer's cost estimate, which was compiled in 2019, is approximately $6M. The USDA-RD Letter of Conditions is **attached** and includes the total funding amount the Town was awarded by USDA-RD.*

5. When is the anticipated notice to proceed?

   Response: *The NTP is expected within 30 days of Town Council's contract award decision, contingent on USDA-RD concurrence.*

6. The Geotech Report mentions a slurry fill is required in certain backfilled areas, is that included in the project scope? Similarly, is compacted AB required under the slabs as noted in the Geotech Report?

   Response: *Subgrade prep for slabs-on-grade will conform to the requirements of the Geotech Report, which specifies 1ft compacted engineered fill beneath slabs on grade. Slurry fill is not required by the Geotech Report but is called for in the structural sheets and shall be placed where shown.*

7. Is HDPE an acceptable alternative to FPVC for the proposed sewer? If acceptable, please specify a DR rating for the alternate material.

   Response: *DR21 HDPE may be considered as an equal to FPVC provided the Contractor submits an alternative design in accordance with MAG Section 738 demonstrating equivalent hydraulic capacity and proper structural/installation design. Pipe shall be fusion-welded only, with appropriate restraint at manholes and transitions. Design shall account for thermal expansion and contraction as well. FPVC remains the basis of design until HDPE substitution is formally reviewed and accepted.*

8. Are there any other areas designated for fill material?

   Response: *Proposed disposal location for excess material is as shown on the construction plans. The contractor may coordinate with the Town to locate additional disposal areas on the WWTP site or within Town. Neighboring property owner, Verde Ex has previously expressed an interest in excess material; the contractor may also negotiate the disposal of said material directly with Verde Ex, the Jerome State Historic Park or any other nearby landowners.*

9. Is it possible to perform a site walk at a later date?

   Response: *Additional site walks may be performed at a later time. Please coordinate with the Town Public Works Director, Marty Boland at (520) 904-5272.*

10. Can the gravity sewer main be accessed from any location other than the WWTP, as shown on the plans?

    Response: *Yes, the gravity sewer main can also be accessed from Douglas Road. The Town has acquired an easement for this area, which may be used by the Contractor as needed. The limits of the easement are shown in Attachment 5. Work shall terminate at the wash crossing. The Contractor may not cross beyond the easement boundary, modify the existing crossing in any way, nor impact the existing drainage pattern without prior review and approval from Yavapai County.*

11. Please relocate the junction boxes to be near their individual pieces of equipment. Each piece of equipment has a limited length of cable. The arrangement shown will require specialized cable lengths, which would change depending on how conduit is run, not allowing us to be able to estimate the length needed. As well, we have found that operators prefer to have the disconnect near the piece of equipment.

    Response: *The junction boxes can be field re-located during construction to be placed near their respective pieces of equipment. Please use standard cable lengths for estimating purposes.*

Town of Jerome
Pre-Bid Meeting Sign-In Sheet

Thursday, May Item I. **6 M**

Town of Jerome WWTP Improvements Pre-Bid Meeting Sign-In

Company	Contact Name	Phone	Email Address
Winwater of Phoenix	Austin Malcom	308-224-5283	apmalcom@winsupply.com
Winwater PHX	Griffin Dunlap	320-212-5535	griffin@PHXWinWater.com
TECHNOLOGY CONSTRUCTION	GARRETT SWEETLAND	602-292-7871	garrett@TCIAZ.NET
KLEAR CIVIL CORP	GARRY HAGDEM	623-742-8329	garry.hagdem@KCORPCORP.com
HAYDON CONSTRUCTION	MIKE SHIPLEY	480.901.0537 ~~480-32~~	MSHIPLEY@HAYDON.COM
~~[illegible]~~			
Eagle Mtn	Travis Johanson	928-22-0-0767	Travis@Emcaz.com
EAGLE MNT CONST	JASON WOODS	928-600-1107	JASON.WOODS@EMCAZ.COM
L&M PAINTING	GILLES BUSSIERES	602-576-2710	GILLES@LMPAINTINGCO.COM
SEC	Richard Noone	928 634 5889	rnoone@sec-landmgt.com

Town of Jerome
Pre-Bid Meeting Sign-In Sheet

Thursday, May [illegible]6
M

Town of Jerome WWTP Improvements Pre-Bid Meeting Sign-In

Company	Contact Name	Phone	Email Address
Hensel Phelps	Larry V. Tackett	623-698-1186	ltackett@henselphelps.com
Kasey Martin	Rain For Rent	480-276-5068	Kmartin@rainforrent.com
LOENBRO	JON CAMPING	406 231 7293	JCAMPING@LOENBRO.COM
B4 Enterprises	Kedrick Jessop	435-704-6583	Kedrick@b4concrete.com
FANN Environmental	David Syme	928-308-6812	dimsyme@FANNENVIRONMENTAL.com
VIRTUAL ATTENDEES			
FILANC	Klete Rogers		krogers@filanc.com
FILANC	Dan East		deast@filanc.com
PACE	Duong Do	(714) 481-7223	do@pacewater.com
PACE	Andrea Jaycox	(602) 502-9683	ajaycox@pacewater.com
PACE	Nathan Tesch	(602) 695-4679	ntesch@pacewater.com
Superior Underground Services	Chris White	480-261-7800	cwhite@superiorundergroundservices.com

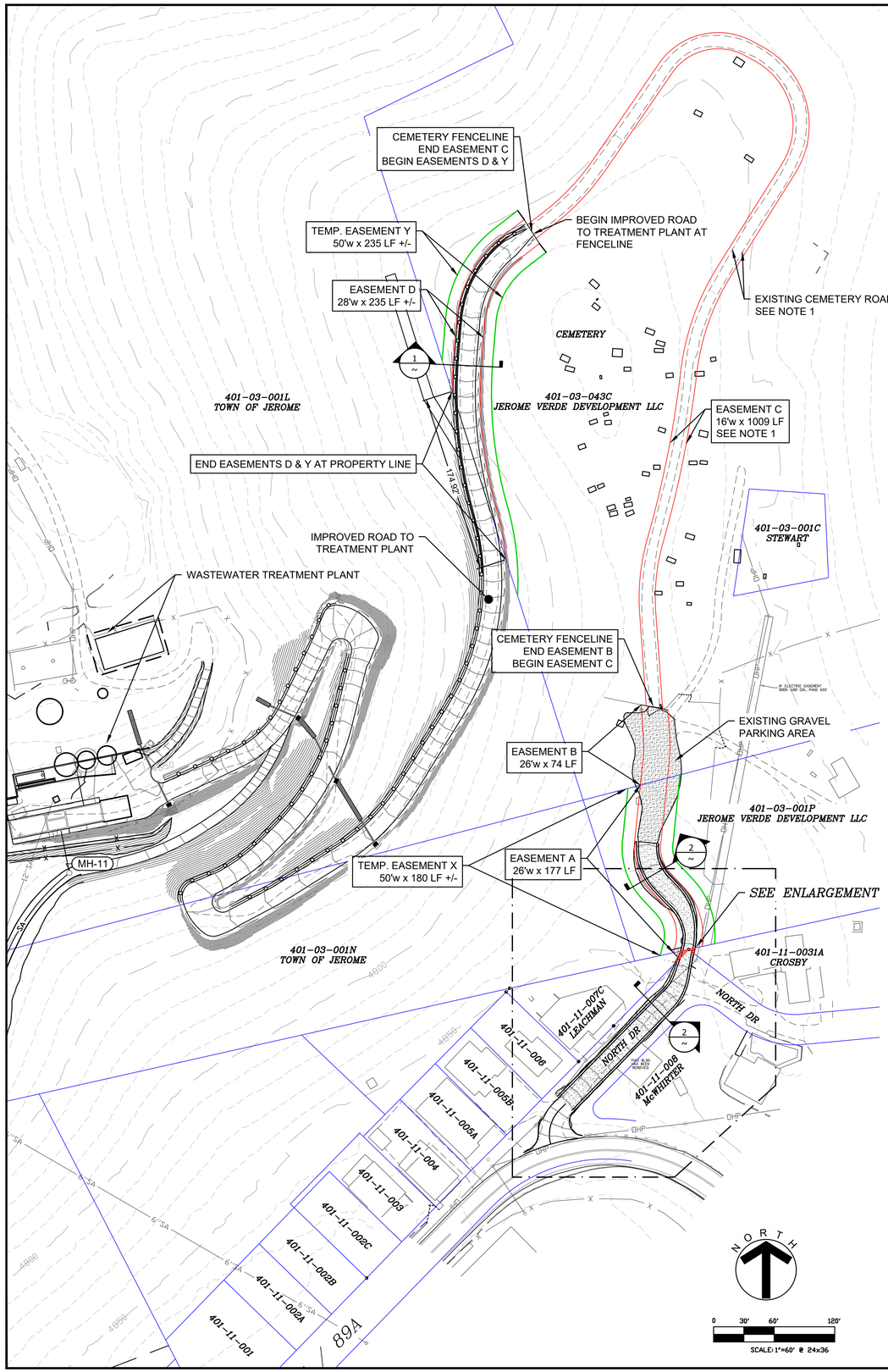

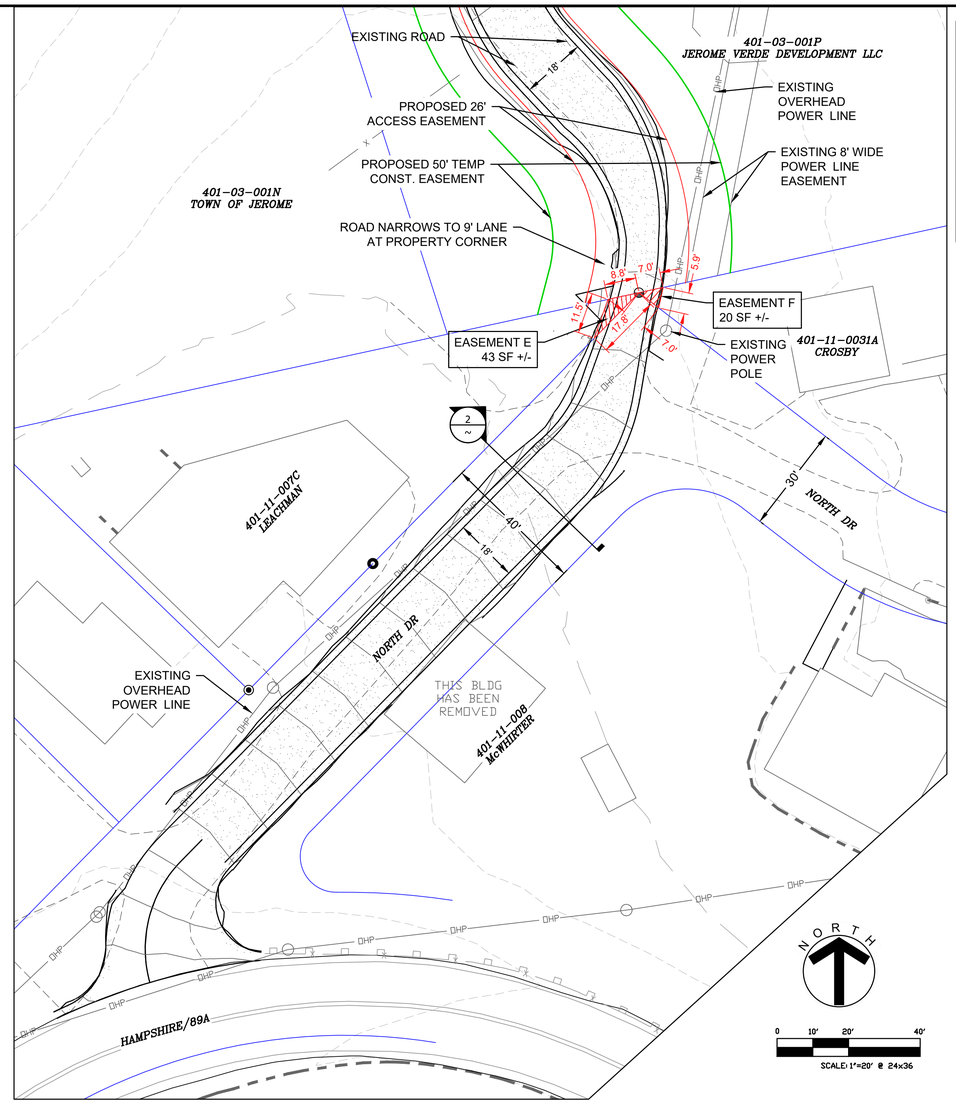

SUMMARY OF ACCESS EASEMENTS					
EASMT	LOCATION	LENGTH (FT)	WIDTH (FT)	AREA (SF)	AREA (AC)
A	401-03-001P	177	26	4,602	0.106
B	401-03-043C	74	26	1,924	0.044
C	401-03-043C	1,009	16	16,144	0.371
D	401-03-043C	235	28	6,580	0.151
E	401-11-007C	NA	NA	43	NA
F	401-11-031A	NA	NA	20	NA
X*	401-03-001P	180	50	4,320*	0.099
Y*	401-03-043C	NA	NA	5,170*	0.119
*EASEMENTS "X" & "Y" ARE TEMPORARY CONSTRUCTION EASEMENTS. AREA= TOTAL EASEMENT MINUS PERMANENT EASEMENT					

NOTES

1. THE CEMETERY IS A HISTORICAL SITE. NO IMPROVEMENTS ARE ALLOWED BEYOND THE EXISTING ROADWAY. THE PROPOSED EASEMENT THROUGH THE SITE SHALL BE FOR THE USE AND MAINTENANCE OF THE EXISTING ROADWAY.
2. THE EXISTING ROAD ALONG NORTH STREET WILL BE WIDENED TO 18' FOR TRUCK ACCESS TO THE TREATMENT PLANT. SEE DETAIL 2.
4. THE EXISTING ROAD FROM NORTH STREET TO THE CEMETARY WILL BE WIDENED FOR TRUCK ACCESS TO THE TREATMENT PLANT. SEE DETAIL 2.
5. THE EXISTING ROAD FROM THE CEMETARY TO THE TREATMENT PLANT WILL BE WIDENED TO 18' FOR TRUCK ACCESS. SEE DETAIL 1.
6. 50' WIDE TEMPORARY CONSTRUCTION EASEMENTS ARE PROPOSED FOR CONSTRUCTING THE ACCESS ROADS TO THE CEMETARY AND TREATMENT PLANT.
7. TOTAL EASEMENT AREAS ARE APPROXIMATE BASED ON LINEAR FOOTAGE. FINAL AREAS WILL BE MORE PRECISE AND MAY VARY.

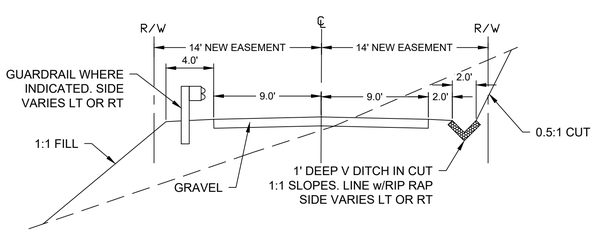

1 TYPICAL ACCESS ROAD TO TREATMENT PLANT 1"=6'

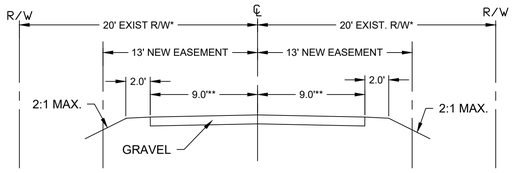

*NORTH DRIVE HAS 40' EXISTING RIGHT OF WAY.
**LANE WIDTH VARIES PER PLAN

2 TYPICAL ACCESS ROAD HWY 89A TO CEMETARY 1"=6'

THIS EXHIBIT SHOWS PROPOSED EASEMENTS FOR ACCESS TO THE TOWN OF JEROME WASTEWATER TREATMENT PLANT. EASEMENTS SHALL BE FOR ROAD CONSTRUCTION & MAINTENANCE AND FOR ACCESS TO THE TREATMENT PLANT. TO BE OBTAINED BY THE TOWN OF JEROME.

EXHIBIT. NOT FOR CONSTRUCTION. FOR AGENCY REVIEW ONLY

TOWN OF JEROME
WASTEWATER TREATMENT PLANT IMPROVEMENTS

SEC Inc.
825 COVE PARKWAY
COTTONWOOD, AZ 86326
928-282-7787

PROPOSED ACCESS EASEMENTS EXHIBIT

DATE	DRAWN	SHEET
4/11/24	NMW	1 OF 1
SCALE	CHECKED	PROJECT NO.
AS SHOWN	KG	19-1101CE

©2024 SEC, Inc., All Rights Reserved. This document is protected under the United States Copyright Act. No part may be reproduced in any form or by any means or stored in a database or retrieval system, without the prior written permission of SEC, Inc. These plan documents have been prepared using technical knowledge that would be applied by other qualified registrants who practice the same profession in the same area and at the same time. Efforts have been made to be as accurate as possible, however, plan documents could contain unintentional technical inaccuracies, typographical errors or omissions. Users of these plan documents should understand that it is highly probable that errors and omissions will occur in any plan/document preparation process.

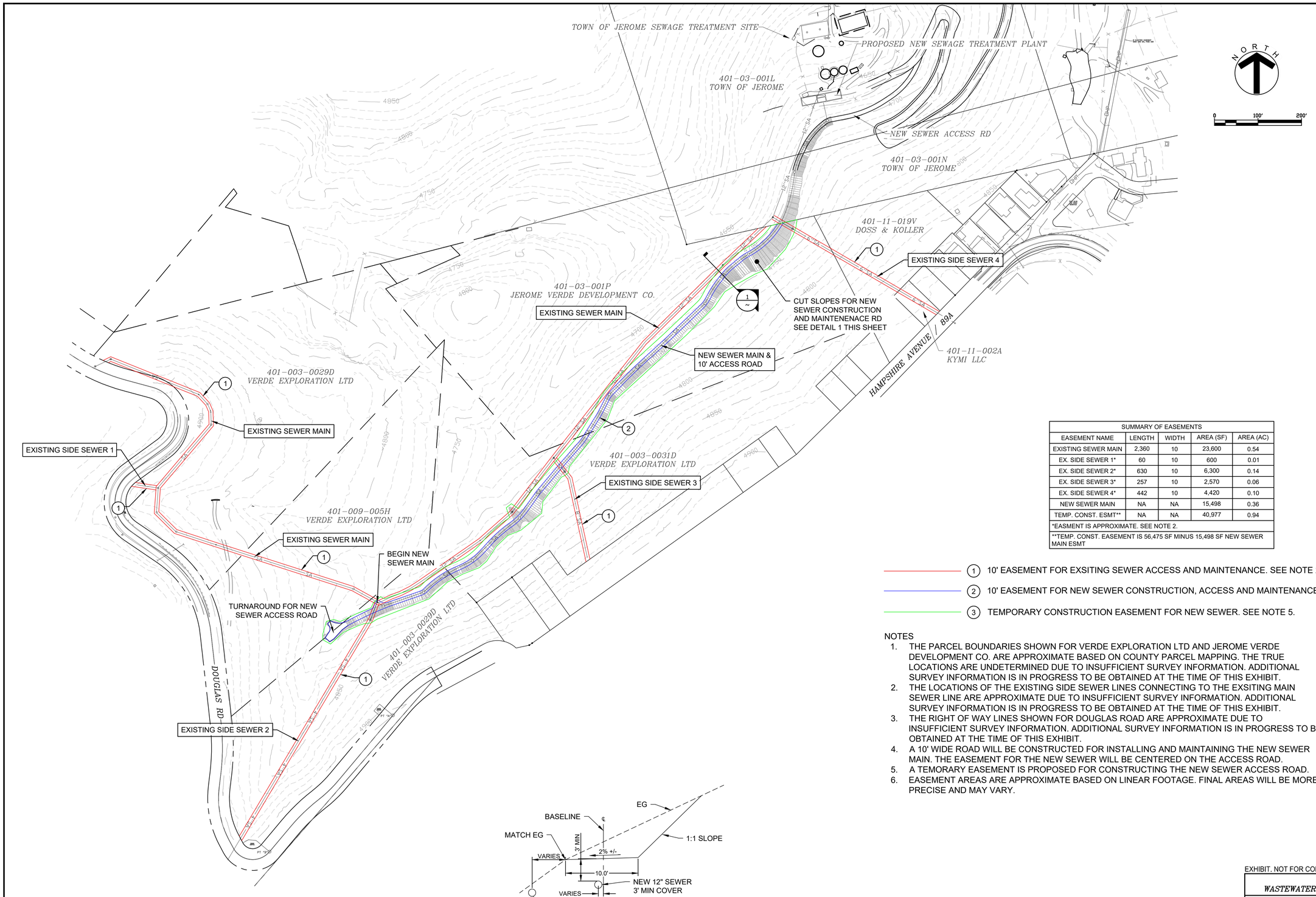

1 TYPICAL SEWER CONSTRUCTION ROAD
1"=6'

SUMMARY OF EASEMENTS				
EASEMENT NAME	LENGTH	WIDTH	AREA (SF)	AREA (AC)
EXISTING SEWER MAIN	2,360	10	23,600	0.54
EX. SIDE SEWER 1*	60	10	600	0.01
EX. SIDE SEWER 2*	630	10	6,300	0.14
EX. SIDE SEWER 3*	257	10	2,570	0.06
EX. SIDE SEWER 4*	442	10	4,420	0.10
NEW SEWER MAIN	NA	NA	15,498	0.36
TEMP. CONST. ESMT**	NA	NA	40,977	0.94
*EASMENT IS APPROXIMATE. SEE NOTE 2.				
**TEMP. CONST. EASEMENT IS 56,475 SF MINUS 15,498 SF NEW SEWER MAIN ESMT				

(1) 10' EASEMENT FOR EXSITING SEWER ACCESS AND MAINTENANCE. SEE NOTE 2.

(2) 10' EASEMENT FOR NEW SEWER CONSTRUCTION, ACCESS AND MAINTENANCE. SEE NOTE 4

(3) TEMPORARY CONSTRUCTION EASEMENT FOR NEW SEWER. SEE NOTE 5.

NOTES

1. THE PARCEL BOUNDARIES SHOWN FOR VERDE EXPLORATION LTD AND JEROME VERDE DEVELOPMENT CO. ARE APPROXIMATE BASED ON COUNTY PARCEL MAPPING. THE TRUE LOCATIONS ARE UNDETERMINED DUE TO INSUFFICIENT SURVEY INFORMATION. ADDITIONAL SURVEY INFORMATION IS IN PROGRESS TO BE OBTAINED AT THE TIME OF THIS EXHIBIT.
2. THE LOCATIONS OF THE EXISTING SIDE SEWER LINES CONNECTING TO THE EXSITING MAIN SEWER LINE ARE APPROXIMATE DUE TO INSUFFICIENT SURVEY INFORMATION. ADDITIONAL SURVEY INFORMATION IS IN PROGRESS TO BE OBTAINED AT THE TIME OF THIS EXHIBIT.
3. THE RIGHT OF WAY LINES SHOWN FOR DOUGLAS ROAD ARE APPROXIMATE DUE TO INSUFFICIENT SURVEY INFORMATION. ADDITIONAL SURVEY INFORMATION IS IN PROGRESS TO BE OBTAINED AT THE TIME OF THIS EXHIBIT.
4. A 10' WIDE ROAD WILL BE CONSTRUCTED FOR INSTALLING AND MAINTAINING THE NEW SEWER MAIN. THE EASEMENT FOR THE NEW SEWER WILL BE CENTERED ON THE ACCESS ROAD.
5. A TEMORARY EASEMENT IS PROPOSED FOR CONSTRUCTING THE NEW SEWER ACCESS ROAD.
6. EASEMENT AREAS ARE APPROXIMATE BASED ON LINEAR FOOTAGE. FINAL AREAS WILL BE MORE PRECISE AND MAY VARY.

THIS EXHIBIT SHOWS PROPOSED EASEMENTS FOR CONSTRUCTION AND MAINTENANCE OF EXISTING AND NEW SEWER LINES TO BE OBTAINED BY THE TOWN OF JEROME.

EXHIBIT. NOT FOR CONSTRUCTION. FOR AGENCY REVIEW ONLY

TOWN OF JEROME
WASTEWATER TREATMENT PLANT IMPROVEMENTS

SEC Inc.
825 COVE PARKWAY
COTTONWOOD, AZ 86326
928-282-7787

PROPOSED SEWER EASEMENTS EXHIBIT

DATE	DRAWN	SHEET
2/28/24	NMW	1 OF 1
SCALE	CHECKED	PROJECT NO.
AS SHOWN	KG	19-1101CE

©2024, SEC, Inc., All Rights Reserved. This document is protected under the United States Copyright Act. No part may be, reproduced in any form or by any means or stored in a database or retrieval system, without the prior written permission of SEC, Inc. These plans/documents have been prepared using technical knowledge that would be applied by other qualified registrants who practice the same profession in the same area and at the same time. Efforts have been made to be as accurate as possible. However, plans/documents could contain unintentional technical inaccuracies, typographical errors or omissions. Users of these plans/documents should understand that it is highly probable that errors and omissions will occur in any plan/document preparation process.

USDA
United States Department of Agriculture

Rural Development

State Office

230 N. 1st Avenue
#206
Phoenix, AZ 85003

Voice 602-280-8701
Fax 855-699-8035
TDD 602-280-8705

April 8, 2022

Town of Jerome, Arizona
600 Clark Street (PO Box 335)
Jerome, AZ 86331

SUBJECT: Letter of Conditions
Recipient Name: Town of Jerome, Arizona

Project Name: Sewer Rehab SEARCH 2020
CFDA NUMBER – 10.760

RUS Loan (SECD):	$1,819,000.00
RUS Grant (SECD)	$4,830,000.00
SEARCH Grant:	$30,000.00 (previously funded)

Dear Ms. Gallagher:

This letter establishes conditions which must be understood and agreed to by you before further consideration may be given to your application. The loan and/or grant will be administered on behalf of the Rural Utilities Service (RUS) by the State and Area staff of USDA Rural Development (RD), both of which are referred to throughout this letter as the Agency. Any changes in project cost, source of funds, scope of project, or any other significant changes in the project or applicant must be reported to and concurred with by the Agency by written amendment to this letter. This includes any significant changes in the Applicant's financial condition, operation, organizational structure or executive leadership. Any changes made without Agency concurrence shall be cause for discontinuing processing of the application.

This letter does not constitute loan and/or grant approval, nor does it ensure that funds are or will be available for the project. The funding is being processed on the basis of a loan not to exceed $1,819,000.00 and/or a grant not to exceed $4,830,000.00. The loan and/or grant will be considered approved on the date Form RD 1940-1, "Request for Obligation of Funds" is signed by the Agency approval official.

The applicant will ensure projects are completed in a timely, efficient, and economical manner. You must meet all conditions set forth under Section III – Requirements Prior to Advertising for Bids within 1 year of this letter.

If you do not meet the conditions of this letter, the Agency reserves the right to withdraw Agency funding.

If you agree to meet the conditions set forth in this letter and desire further consideration be given to your application, please complete and return the following forms within 14 days:

Form RD 1942-46, "Letter of Intent to Meet Conditions"

USDA is an equal opportunity provider, employer and lender.

Form RD 1940-1, "Request for Obligation of Funds"

All parties may access information and regulations referenced in this letter at our website located at https://www.rd.usda.gov/programs-services/water-environmental-programs/water-waste-disposal-loan-grant-program.

The conditions are as follows:

SECTION I - PROJECT SCOPE

1. Project Description – Funds will be used to design, purchase, and install necessary equipment and components to address high ammonia and copper levels in the area along with line improvements to the aging wastewater system. This project is addressing the Arizona Department of Environmental Quality (ADEQ) consent order to meet compliance.

Facilities will be designed and constructed in accordance with sound engineering practices and must meet the requirements of Federal, State, and local agencies. The proposed facility design must be based on the Preliminary Engineering Report (PER), prepared by PACE dated/amended December 2021, as concurred with by the Agency.

2. Project Funding – The Agency is offering the following funding for your project:

RUS Loan (SECD)-	$ 1,819,000.00
RUS Grant -	$ 4,830,000.00
SEARCH Grant -	$30,000.00 (previously funded)
Other Funding -	$ -0-

TOTAL PROJECT COST - $ 6,679,000.00

Any changes in funding sources following obligation of Agency funds must be reported to the processing official. Prior to loan closing, any increase in non-Agency funding will be applied first as a reduction to Agency grant funds, up to the total amount of the grant, and then as a reduction to Agency loan funds.

The applicant must certify that they have exhausted all other funding avenues and have no pending funding considerations from any other sources. Further, the applicant must certify that they do not intend to apply anywhere else for funding for this project. If, after obligation of Agency funds, other funding becomes available, the Agency reserves the right to deobligate any and all funding for this project and to re-underwrite. This may result in the offering of a different funding package to for this project.

Prior to advertisement for construction bids, you must provide evidence of applicant contributions and other funding sources. This evidence should include a copy of the commitment letter. Agency funds will not be used to pre-finance funds committed to the project from other sources.

3. Project Budget – Funding from all sources has been budgeted for the estimated expenditures as follows:

Project Costs:	**Total Budgeted:**
Development/Construction	
Access Road	$778,553
10" Sewer Line Improv.	$925,000
Treatment Plant Site	$558,500
Concrete Tanks	$142,500
General Conditions	$806,306
Equipment	$1,435,000
Contingency	$383,893
Engineering Fees	
Includes:	
Pre-Development (PER/ER)	$30,000
Study & Report Phase	$69,020
Design Phase	$646,500
Permitting & Fees	$89,000
Bid Services	$45,000
Engineering Const. Services	$501,000
Post Construction Services	$5,000
Contingency (Non-Construction)	$67,776
Interest/Fees – Const. Loan	$167,452
Interest/Fees – Bridge Loan	$28,500
TOTAL	$6,679,000

Project feasibility and funding will be reassessed if there is a significant change in project costs after bids are received. Obligated loan and/or grant funds not needed to complete the proposed project will be deobligated. Any reduction will be applied to Agency grant funds first. If actual project costs exceed the project cost estimates, an additional contribution by the Owner may be necessary. An "Amended Letter of Conditions" will be issued for any changes to the total project budget.

4. Project Timeline – To ensure that the project proceeds in a timely manner, key processing milestones have been established in accordance with the PER or other Agency approved documentation. **Projects should be completed and Agency funds fully disbursed within three years of obligation.** By agreeing to the terms herein, you agree to comply with the milestones identified below. If, for any reason, one or more of the milestones cannot be met, you must notify the Agency in writing at least 30 days prior to the referenced date. Should your final completion date become more than three years after obligation the written request will follow the procedures outlined in Section VI of this letter, including the submission of not less than 90 days prior to the benchmark. The correspondence must contain a valid explanation as to why the milestone cannot be met and include a proposed revised project completion schedule. If the Agency agrees to the modification, a written confirmation will be issued. The Agency reserves the right to de-obligate loan and/or grant funds, or take other appropriate action, if the established or amended deadlines are not met.

Milestone	Date
Design Phase	09/07/2022
Bid Process and Permitting	12/30/2022
Start Construction Period	01/16/2023
Substantial Completion	12/29/2023
Final Completion	06/12/2024

SECTION II – RATES & TERMS

5. Interest Rates and Loan Terms – The interest rate will be the lower of the rate in effect at the time of loan approval or the time of loan closing, unless you request otherwise. Should the interest rate be reduced, the payment will be recalculated to the lower amount. The payment due date will be established as the day that the loan closes.

Your loan will be scheduled for repayment over a period of 40 years. Payments will be equal monthly amortized installments, beginning one month after closing. For planning purposes, use a 1.25% interest which provides for a monthly payment of $4,821.00. The precise payment amount will be based on the interest rate at which the loan is closed and may be different than the one above.

6. Security – The loan will be secured by a General Obligation, Revenue, or Other bond with first, or parity lien position in the amount of $1,819,000.00. The bond will be fully registered as to both principal and interest in the name of the "United States of America, Acting through the United States Department of Agriculture." Bond Counsel will be utilized in preparation of these documents.

The bond/security instruments and any ordinance or resolution relating thereto must not contain any provision in conflict with the Agency Loan Resolution, applicable regulations, or associated laws. There must be no defeasance or refinancing clause in conflict with the graduation requirements of 7 U.S.C. 1983.

If the loan will be on parity with another lender/s, the bond/security instrument must specify that, in the event of default, each lender will be affected on a proportionate basis.

Additional security requirements are contained in RUS Bulletin 1780-27, "Loan Resolution (Public Bodies) and/or RUS Bulletin 1780-12, "Water and Waste System Grant Agreement". A draft of all security instruments, including draft bond resolution, must be reviewed and concurred in by the Agency prior to advertising for bids. Bond/loan resolutions must be duly adopted and executed prior to loan closing.

The Grant Agreement will be executed prior to the first disbursement of grant funds. The grantee understands that any property acquired or improved with Federal grant funds may have use and disposition conditions which apply to the property as provided by 2 CFR part 200 in effect at this time and as may be subsequently modified. The grantee understands that any sale or transfer of property is subject to the interest of the United States Government in the market value in proportion to its participation the project.

7. Reserves – Reserves must be properly budgeted and set aside to maintain the financial viability and sustainability of any operation. Reserves are important to fund unanticipated emergency repairs, to assist with debt service should the need arise, and for the replacement of assets which have a useful life less

than the repayment period of the loan. The following reserves are required to be established as a condition of this loan:

a. **Debt Service Reserve** – Unless a General Obligation Bond secures the lien, as a part of this Agency loan proposal, you must establish a debt service reserve fund equal to at least one annual loan installment that accumulates at the rate of 10% of one annual payment per year for ten years or until the balance is equal to one annual loan payment. For planning purposes, 10% of the proposed loan installment would equal $482.10 per month; this amount should be deposited monthly until a total of $57,852 has accumulated. Prior written concurrence from the Agency must be obtained before funds may be withdrawn from this account during the life of the loan. When funds are withdrawn during the life of the loan, deposits will continue as designated above until the fully funded amount is reached.

b. **Short-Lived Asset Reserve** – You must establish a short-lived asset reserve fund. Based on the PER, you must deposit at least $3,333 into the short-lived asset reserve fund annually for the life of the loan to pay for repairs and/or replacement of major system assets. It is your responsibility to assess your facility's short-lived asset needs on a regular basis and adjust the amount deposited to meet those needs.

SECTION III –REQUIREMENTS PRIOR TO ADVERTISING FOR BIDS

8. Organization – The Bond Counsel transcripts of proceedings must show that your organization is a duly incorporated public body and has continued legal existence. Your organization must have the authority to own, construct, operate, and maintain the proposed facility, as well as for borrowing money, pledging security and raising revenues.

9. Suspension and Debarment Screening – You will be asked to provide information on the principals of your organization. Agency staff must conduct screening for suspension and debarment of the entity, as well as its principals through the Do Not Pay Portal.

a. Principal –
    i. An officer, director, owner, partner, principal investigator, or other person within a participant with management or supervisory responsibilities related to a covered transaction; or
    ii. A consultant or other person, whether or not employed by the participant or paid with federal funds, who –
        1. Is in a position to handle federal funds;
        2. Is in a position to influence or control the use of those funds; or,
        3. Occupies a technical or professional position capable of substantially influencing the development or outcome of an activity required to perform the covered transaction. (2 CFR §180.995)

10. Environmental Requirements – The project, as proposed, has been evaluated to be consistent with the National Environmental Policy Act. Other Federal, State, tribal, and local laws, regulations and/or permits may apply or be required. If the project or any project element deviates from or is modified from the originally approved project, additional environmental review may be required.

This project has applied the Nationwide Programmatic Agreement Among the U.S. Department of Agriculture Rural Development Programs, National Conference of State Historic Preservation Officers,

and the Advisory Council on Historic Preservation for Sequencing Section 106 (NPA). This agreement allows the Agency to obligate funds prior to the completion of Section 106 of the National Historic Preservation Act. The Agreement stipulates, among other things, that the Section 106 process must be complete prior to the awarding of funds and prior to construction. Rural Development is in receipt of your signed NPA Awareness Certification form. In the Awareness Certification, you have acknowledged your awareness of these and other requirements and have agreed that you must complete the Section 106 process before the environmental review component of your application can be finalized and before construction. These historic preservation requirements must be met prior to final approval and prior to taking any action that would have an adverse effect on historic properties or hinder completion of the consultation process required under Section 106 of the National Historic Preservation Act (NHPA). Do not initiate any type of ground disturbing activity, enter into construction contracts, initiate construction, rehabilitation, or purchase land or equipment prior to receiving notification from the Agency that these requirements have been met. Taking any of these actions prior to completion of the required reviews could result in loss of program funds.

11. Engineering Services – You have been required to complete an Agreement for Engineering Services, which should consist of the Engineers Joint Contract Documents Committee (EJCDC) documents as indicated in RUS Bulletin 1780-26, "Guidance for the Use of EJCDC Documents on Water and Waste Projects with RUS Financial Assistance," or other approved form of agreement. The Agency will provide concurrence prior to advertising for bids and must approve any modifications to this agreement.

12. Contract Documents, Final Plans, and Specifications- All development will be completed by contract in accordance with applicable provisions of RUS Instruction 1780, Subpart C – Planning, Designing, Bidding, Contracting, Constructing and Inspections, (copy available upon request), and in compliance with all statutory requirements. You are responsible to share this with your engineer before pre-design.

a. The plans and specifications and all proposals required by law must be approved by Arizona Department of Environmental Quality.

b. In preparing final design and providing service to the planned project area, you and your engineer will comply with all zoning and planning requirements of the appropriate governing bodies where service is to be provided.

c. The Agency will need to concur in the plans and specifications prior to advertising for bids. The Agency may require an updated cost estimate if a significant amount of time has elapsed between the original project cost estimate and advertising for bids.

d. The use of any procurement method other than competitive sealed bids must be requested in writing and approved by the Agency.

e. The contract documents must consist of the EJCDC construction contract documents as indicated in RUS Bulletin 1780-26 or other Agency-approved forms of agreement.

f. **American Iron and Steel Requirements.** Section 746 of Title VII of the Consolidated Appropriations Act of 2017 (Division A - Agriculture, Rural Development, Food and Drug Administration, and Related Agencies Appropriations Act, 2017) and subsequent statutes

mandating domestic preference applies the American Iron and Steel (AIS) requirement to obligations made after May 5, 2017:

(1) No Federal funds made available for this fiscal year for the rural water, wastewater, waste disposal, and solid waste management programs authorized by the Consolidated Farm and Rural Development Act (7 U.S.C. 1926 et seq.) shall be used for a project for the construction, alteration, maintenance, or repair of a public water or wastewater system unless all of the iron and steel products used in the project are produced in the United States.
(2) The term "iron and steel products" means the following products made primarily of iron or steel: lined or unlined pipes and fittings, manhole covers and other municipal castings, hydrants, tanks, flanges, pipe clamps and restraints, valves, structural steel, reinforced precast concrete, and construction materials.
(3) The requirement shall not apply in any case or category of cases in which the Secretary of Agriculture (in this section referred to as the "Secretary") or the designee of the Secretary finds that—
   (a) applying the requirement would be inconsistent with the public interest;
   (b) iron and steel products are not produced in the United States in sufficient and reasonably available quantities or of a satisfactory quality; or
   (c) inclusion of iron and steel products produced in the United States will increase the cost of the overall project by more than 25 percent.
(4) Owners are ultimately responsible for compliance with AIS requirements (as defined in RUS Bulletin 1780-35).
   (a) ***Sign*** loan resolutions, grant agreements and letters of intent to meet conditions which include AIS language, accepting AIS requirements in those documents and in the letter of conditions.
   (b) ***Sign*** agreements for engineering services, executed construction contracts and all other appropriate and necessary documents which include AIS language.
   Change Orders and Partial Payment Estimates: ***Acknowledge*** responsibility for compliance with AIS requirements by signing change orders (EJCDC C-941) and partial payment estimates (EJCDC C-620).
   (c) Substantial completion of project: ***Obtain*** the certification letters from the consulting engineer and ***maintain*** this documentation for the life of the loan.
   (d) *Special Cases*
   i. Where Owner provides their own engineering, the Owner's responsibilities will include items listed in Section 5 of RUS Bulletin 1780-35.
   ii. Where Owner performs their own construction, the Owner's responsibilities will include items listed in Section 6 of RUS Bulletin 1780-35.
   iii. Where Owner directly procures AIS products, Owner must ***utilize*** EJCDC Procurement Series standard contract documents following RUS Bulletin 1780-26 Exhibit D and ***obtain*** manufacturers' certifications and provide copies to Engineer and Contractor.

13. Legal Services –A legal services agreement is required with your attorney and bond counsel, if applicable, for any legal work needed in connection with this project. The agreement should stipulate an hourly rate for the work, with a "not to exceed" amount for the services, including reimbursable expenses. RUS Bulletin 1780-7, "Legal Services Agreement," or similar format may be used. The Agency will provide concurrence prior to advertising for bids. Any changes to the fees or services spelled out in the original agreement must be reflected in an amendment to the agreement and have prior Agency concurrence.

14. **<u>Property Rights</u>** - Prior to advertising for bids, you and your legal counsel must furnish satisfactory evidence that you have adequate continuous and valid control over the lands and rights-of-way needed for the project. Acquisitions of necessary land and rights must be accomplished in accordance with the Uniform Relocation Assistance and Real Property Acquisition Policies Act. Such control over the lands and rights will be evidenced by the following:

a. **Right-of-Way Map** – Your engineer will provide a map clearly showing the location of all lands and rights-of-way needed for the project. The map must designate public and private lands and rights and the appropriate legal ownership thereof.
b. **Form RD 442-20, "Right-of-Way Easement"** – This form, or similar format, may be used to obtain any necessary easements for the proposed project.
c. **Form RD 442-21, "Right-of-Way Certificate"** – You will provide a certification on this form that all right-of-way requirements have been obtained for the proposed project.
d. **Form RD 442-22, "Opinion of Counsel Relative to Rights-of-Way"** – Your attorney will provide a certification and legal opinion on this form addressing rights-of-way, easements, and title.
e. Preliminary Title Work (Title Opinion) – When applicable, your attorney or title company will provide a preliminary title opinion for any property related to the facility, currently owned and to be acquired, along with copies of deeds, contracts or options for purchasing said property. Form RD 1927-9, "Preliminary Title Opinion," may be used.
e. Title Work (Title Insurance when a security interest is not taken in the real estate) – When applicable, your attorney or title company will secure an Owners' Title Insurance policy on all real estate to be acquired in connection with this project. This policy should be in an amount equal to the market value of the property as improved.

The approving official may waive title defects or restrictions, such as utility easements, that do not adversely affect the suitability, successful operation, security value, or transferability of the facility. Any such waivers must be provided by the approving official in writing prior to closing or the start of construction, whichever occurs first.

You are responsible for the acquisition of all property rights necessary for the project and for determining that prices paid are reasonable and fair. The Agency may require an appraisal by an independent appraiser or Agency employee in order to validate the price to be paid.

15. **<u>System Policies, Procedures, Contracts, and Agreements</u>** – The facility must be operated on a sound business plan which involves adopting policies, procedures, and/or ordinances outlining the conditions of service and use of the proposed system. Mandatory connection policies should be used where enforceable. The policies, procedures, and/or ordinances must contain an effective collection policy for accounts not paid in full within a specified number of days after the date of billing. They should include appropriate late fees, specified timeframes for disconnection of service, and reconnection fees. A draft of these policies, procedures, and/or ordinances must be submitted for Agency review and concurrence, along with the documents below, before closing instructions may be issued unless otherwise stated.

a. **Conflict of Interest Policy** – Prior to obligation of funds, you must certify in writing that your organization has in place up-to-date written standards of conduct covering conflict of interest. The standards of conduct must include disciplinary actions in the event of a violation by officers,

employees, or agents of the borrower. The standards identified herein apply to any parent, affiliate or subsidiary organization of the borrower that is not a state or local government, or Indian Tribe. Policies and accompanying documents shall be furnished to Rural Development upon request.

You must also submit a disclosure of planned or potential transactions related to the use of Federal funds that may constitute or present the appearance of personal or organizational conflict of interest. Disclosure must be in the form of a written letter signed and dated by the applicant's official. A negative disclosure in the same format is required if no conflicts are anticipated.

Sample conflict of interest policies may be found at the National Council of Nonprofits website, https://www.councilofnonprofits.org/tools-resources/conflict-of-interest, or in Internal Revenue Service Form 1023, Appendix A, "Sample Conflict of Interest Policy," at http://www.irs.gov/pub/irs-pdf/i1023.pdf. Though these examples reference non-profit corporations, the requirement applies to all types of Agency borrowers.

Assistance in developing a conflict of interest policy is available through Agency-contracted technical assistance providers if desired.

b. **Sewer User Agreement** – Projects not involving mandatory connection require users to execute a Water/Sewer Users Agreement. The draft agreement must receive Agency concurrence prior to advertising for bids. RUS Bulletin 1780-9, "Water Users Agreement," or similar format may be used.

c. **Contracts for Other Services/Lease Agreement** – Drafts of any contracts or other forms of agreements for other services, including audit, management, operation, and maintenance, or lease agreements covering real property essential to the successful operation of the facility, must be submitted to the Agency for review and concurrence prior to advertising for bids.

d. **Parity/Intercreditor Agreement** – Projects with parity liens must have in place a written agreement between the parity lenders. The draft agreement must receive Agency concurrence prior to advertising for bids.

Fully executed copies of any policies, procedures, ordinances, contracts, or agreements above must be submitted prior to loan closing, with the exception of the conflict of interest policy, which must be in place prior to obligation of funds.

16. Closing Instructions – The Agency will prepare closing instructions as soon as the requirements of the previous paragraphs are complete, as well as a draft of the security instrument(s). Both your bond and legal counsel must comply with these instructions when closing the Agency loan/grant. will change over each successive year and user rates will need to be adjusted on a regular basis.

17. System Users – This letter of conditions is based upon your indication at application that there will be at least 173 residential users, 73 non-residential users, and no bulk / wholesale users on the existing and/or proposed system when construction is completed.

Before the Agency can agree to the project being advertised for construction bids, you must certify that the number of users indicated at application are currently using the system or signed up to use the system once it is operational.

If the actual number of existing and/or proposed users that have signed up for service is less than the number indicated at the time of application, you must provide the Agency with a written plan on how you will obtain the necessary revenue to adequately cash flow the expected operation, maintenance, debt service, and reserve requirements of the proposed project (e.g., increase user rates, sign up an adequate number of other users, reduce project scope, etc.). Similar action is required if there is cause to modify the anticipated flows or volumes presented following approval.

If you are relying on mandatory connection requirements, you must provide evidence of the authorizing ordinance or statute along with your user certification.

If project does not involve mandatory connections, you must provide the following:

a. **Positive Program to Encourage Connections** – You must provide a positive program to encourage connection by all users as soon as service is available. The program will be reviewed by the Agency prior to advertising for bids. A guide for developing your positive program is available from the Agency.
b. **Sewer User Agreements** – Users will be required to execute a Sewer Users Agreement prior to advertising for construction bids. The amount of cash contributions required will be set by you and concurred with by the Agency. Contributions should be an amount high enough to indicate sincere interest on the part of the potential user, but not so high as to preclude service to low-income families, and must have a deadline for the contribution to be used or forfeited. RUS Bulletin 1780-9, "Water Users Agreement," or similar agreement may be used.
c. **Service Declination Statement** – Each potential user who is located along planned lines and declines the offered service will be provided an opportunity to sign a "Service Declination Statement."

18. Construction Account – A separate construction account, subject to Agency audit, will be established for deposit of all project funds. These funds must be deposited in a bank with Federal Deposit Insurance Corporation (FDIC) insurance coverage. **If the balance in the account containing these funds exceeds the FDIC insurance coverage, the excess amount must be collaterally secured.** A separate account will not be required for Federal funds and other funds; however, the recipient must be able to separately identify, report and account for all Federal funds, including the receipt, obligation and expenditure of funds. Financial institutions or depositaries accepting deposits of public funds and providing other financial agency services to the Federal Government are required to pledge adequate, acceptable securities as collateral, in accordance with 202.6, 31 CFR Part 202. All funds in the account will be secured by a collateral pledge equaling at least 100 percent of the highest amount of funds expected to be deposited in the construction account at any one time.

19. Interim Financing – The Agency's policy is to utilize interim financing for all loans exceeding $500,000. Prepayment penalties on interim financing are not allowed. Borrowers are required to seek interim financing initially from private or cooperative lenders if funds can be borrowed at reasonable interest rates on an interim basis from those sources for the construction period. The fact that a commercial lender's rates are higher than current Agency interest rates does not necessarily mean that the commercial rate is not reasonable.

20. Proposed Operating Budget – You must establish and/or maintain a rate schedule that provides adequate income to meet the minimum requirements for operation and maintenance (O and M), debt service, and reserves. Prior to advertising for bids, you must submit a proposed annual operating budget to the Agency, as well as your proposed rate schedule. The operating budget should be based on a typical

year cash flow after completion of the construction phase and should be signed by the appropriate official of your organization. Form RD 442-7, "Operating Budget," or similar format may be utilized for this purpose. It is expected that O and M expenses will change over each successive year and user rates will need to be adjusted on a regular basis.

Technical assistance is available at no cost to help you evaluate and complete a rate analysis on your system. This assistance is available free to your organization. If you are interested, please contact our office for information.

21. Permits –The owner or responsible party will be required to obtain all applicable permits for the project, prior to advertising for bids. The consulting engineer must submit written evidence that all applicable permits required prior to construction have been obtained with submission to the Agency of the final plans, specifications, and bid documents.

22. Risk and Resilience Assessment/Emergency Response Plan (RRA/ERP) – The Agency requires all financed water and wastewater systems to have a RRA/ERP in place. New water or wastewater systems must provide a certification that an ERP is complete prior to the start of operation, and a certification that an RRA is complete must be submitted within one year of the start of operation. Borrowers with existing systems must provide a certification that an RRA/ERP has been completed prior to advertising for bids. Technical assistance is available in preparing these documents at no cost to you.

The RRA/ERP documents themselves are not submitted to the Agency. The RRA/ERP must address potential impacts from natural disasters and other emergency events. It should include plans to address impacts of flash flooding in areas where severe drought or wildfires occur. The documents should be reviewed and updated every five years at a minimum.

23. Bid Authorization - Once all the conditions outlined in Section III of this letter have been met, the Agency will authorize you to advertise the project for construction bids. Such advertisement must be in accordance with applicable State statutes.

SECTION IV - REQUIREMENTS PRIOR TO START OF CONSTRUCTION

24. Disbursement of Agency Funds - Agency funds will be disbursed electronically into the construction account as they are needed. SF 3881, "ACH Vendor/Miscellaneous Payment Enrollment Form," must be completed and submitted to the Agency prior to commencement of construction.

The order of disbursement is as follows: 1) Applicant contribution, 2) other funding sources, 3) interim financing or Agency loan funds, and 4) Agency grant funds. Interim financing or Agency loan funds will be expended after all other funding sources unless a written agreement is reached with all other funding sources on how funds are to be disbursed prior the first disbursement. Interim financing funds or Agency loan funds must be used prior to the use of Agency grant funds. Agency Grant funds must not be disbursed prior to loan funds except as authorized in 7 CFR 1780.45(d).

Grant funds are to be deposited in an interest-bearing account (exception provided below) in accordance with 2 CFR Part 200 and interest in excess of $500 per year remitted to the Agency. The funds should be disbursed by the recipient immediately upon receipt, and there should be little interest accrual on the Federal funds. Recipients shall maintain advances of Federal funds in interest-bearing accounts, unless:

- The recipient receives less than $120,000 in Federal awards per year.
- The best reasonably available interest-bearing account would not be expected to earn interest in excess of $500 per year on Federal cash balances.
- The depository would require an average or minimum balance so high that it would not be feasible within the expected Federal and non-Federal cash resources.
- A foreign government or banking system prohibits or precludes interest-bearing accounts.

25. Bid Tabulation – Immediately after bid opening, you must provide the Agency with the bid tabulation and your engineer's evaluation of bids and recommendations for contract awards. If the Agency agrees that the construction bids received are acceptable, adequate funds are available to cover the total project costs, and all the requirements of Section III of this letter have been satisfied, the Agency will authorize you to issue the Notice of Award.

a. **Cost Overruns –** If bids are higher than expected, or if unexpected construction problems are encountered, you must utilize all options to reduce cost overruns. Negotiations, redesign, use of bidding alternatives, rebidding or other means will be considered prior to commitment of subsequent funding by the Agency. Any requests for subsequent funding to cover cost overruns will be contingent on the availability of funds. Cost overruns exceeding 20 percent of the development cost at time of loan or grant approval or where the scope of the original purpose has changed will compete for funds with all other applications on hand as of that date.
b. **Excess Funds** - If bids are lower than anticipated at time of obligation, excess funds must be deobligated prior to start of construction except in the cases addressed in this paragraph. In cases where the original PER for the project included items that were not bid, or were bid as an alternate, the State Office official may modify the project to fully utilize obligated funds for those items. Amendments to the PER, ER, and Letter of Conditions may be needed for any work not included in the original project scope. In all cases, prior to start of construction, excess funds will be deobligated, with grant funds being deobligated first. Excess funds do not include contingency funds as described in this letter.

26. Suspension and Debarment Screening – In accordance with 2 CFR Part 180, Subpart C, as a condition of the transaction and the responsibilities to persons at the next lower tier with whom you enter into transactions, you must conduct screening for suspension and debarment of lower tier recipients (e.g., vendors, contractors, etc.).

27. Contract Review – Your attorney will certify that the executed contract documents, including performance and payment bonds, if required, are adequate and that the persons executing these documents have been properly authorized to do so in accordance with 7 CFR 1780.61(b).

Once your attorney has certified that they are acceptable, the contract documents will be submitted to the Agency for concurrence. Construction cannot commence until the Agency has concurred in the construction contracts.

28. Final Rights of Way – Your attorney or title company must furnish a separate final title opinion or Title Insurance Policy on all real property related to the facility, now owned and to be acquired for this project, as of the day of loan closing or start of construction, whichever occurs first. Form RD 1927-10, "Final Title Opinion" may be used.

If any of the right-of-way forms listed previously in this letter contain exceptions that do not adversely affect the suitability, successful operation, security value, or transferability of the facility, the approving official must provide a written waiver prior to the issuance of the Notice to Proceed.

29. Insurance and Bonding Requirements - Prior to the start of construction or loan closing, whichever occurs first, you must acquire and submit to the Agency proof of the types of insurance and bond coverage for the borrower shown below. The use of deductibles may be allowed, providing you have the financial resources to cover potential claims requiring payment of the deductible. The Agency strongly recommends that you have your engineer, attorney, and insurance provider(s) review proposed types and amounts of coverage, including any exclusions and deductible provisions. It is your responsibility and not that of the Agency to assure that adequate insurance and fidelity bond coverage is maintained.

a. **General Liability Insurance** – Include vehicular coverage.
b. **Workers' Compensation** – In accordance with appropriate State laws.
c. **Guaranty or Fidelity Insurance**–Coverage for all persons who have access to funds, including persons working under a contract or management agreement. Coverage may be provided either for all individual positions or persons, or through "blanket" coverage providing protection for all appropriate employees. Each position is to be insured in an amount equal to the maximum amount of funds expected to be under the control of that position at any one time. The minimum coverage allowed will be an amount equal to the total annual debt service payment on the Agency loans. The coverage may be increased during construction based on the anticipated monthly advances.
d. **National Flood Insurance** - If the project involves acquisition or construction in a designated special flood area, the community in which the acquisition or construction is situated must be currently participating in the national flood insurance program. Additionally, if the project involves acquisition or constriction in designated special flood or mudslide prone areas, a flood insurance policy must be in place at the time of loan closing.
e. **Real Property Insurance** – Fire and extended coverage will normally be maintained on all structures except reservoirs, pipelines and other structures if such structures are not normally insured, and subsurface lift stations except for the value of electrical and pumping equipment. The Agency will be listed as mortgagee on the policy when the Agency has a lien on the property. Prior to the acceptance of the facility from the contractor(s), you must obtain real property insurance (fire and extended coverage) on all facilities identified above.

The Agency is to be listed as "Other Insured" so as to receive notifications on all insurance, regardless of security. Insurance types described above are required to be continued throughout the life of the loan. See Section VII.

30. Initial Civil Rights Compliance Review – The Agency will conduct an initial civil rights compliance review of the borrower prior to loan closing or start of construction, whichever occurs first, in accordance with 7 CFR 1901, Subpart E. You are expected to comply with the completion of the review, including the furnishing of any documents, records, or other applicable material.

SECTION V – REQUIREMENTS PRIOR TO CLOSING

31. Interim Financing. Interim financing is being used. Generally, loan closing will occur near the end of construction when interim funds are fully disbursed. Documents detailed above from Sections II and III regarding security, electronic payments (Form 3550-28), and system policies, procedures, contracts, and agreements must be adopted and/or executed and submitted to the Agency prior to loan closing.

32. Electronic Payments – Payments will be made through an electronic preauthorized debit system. You will be required to complete Form RD 3550-28, "Authorization Agreement for Preauthorized Payments," for all new and existing indebtedness to the Agency prior to loan closing.

33. Other Requirements – All requirements contained in the Agency's closing instructions, as well as any requirements of your bond counsel and/or attorney, must be met prior to loan closing.

a. System for Award Management. You will be required to maintain a Dun and Bradstreet Data Universal Numbering System (DUNS) number and maintain an active registration in the System for Award Management (SAM) database. Renewal can be completed online at: http://sam.gov. This registration must be renewed and revalidated every 12 months for as long as there is an active loan, grant, or guaranteed loan with the Agency.

To ensure the information is current, accurate and complete, and to prevent the SAM account expiration, the review and updates must be performed within 365 days of the activation date, commonly referred to as the expiration date. The registration process may take up to 10 business days. (See 2 CFR Part 25 and the "Help" section at http://sam.gov).

b. Litigation. You are required to notify the Agency within 30 days of receiving notification of being involved in any type of litigation prior to loan closing or start of construction, whichever occurs first. Additional documentation regarding the situation and litigation may be requested by the Agency.

c. Certified Operator. Evidence must be provided that your system has or will have a certified operator, as defined by applicable State or Federal requirements, available prior to the system becoming operational, or that a suitable supervisory agreement with a certified operator is in effect.

SECTION VI – REQUIREMENTS DURING CONSTRUCTION AND POST CONSTRUCTION

34. Construction Completion Timeframe – Following the benchmarks established in Section I, Item 4, Project Timeline, all projects should be completed and Agency funds fully disbursed within three years of the date of obligation. If funds are not disbursed within three years of obligation and you have not already done so per Section I, Item 4, you must submit a written request for extension of time to the Agency with adequate justification of the circumstances, including any beyond your control. The request must be submitted at least 90 days prior to the end of the three-year timeframe and include a revised estimated date of completion. The Agency will typically only allow one extension. Subsequent requests for waivers beyond the initial extension or requests that exceed five years from the initial date of obligation will be submitted to the RUS, Water and Environmental Programs for consideration. The Agency retains the right to de-obligate any loan and/or grant monies, or take other appropriate action, related to unliquidated funds that exceed the timeframes above and are not under an active extension.

35. Resident Inspector(s) – Full-time inspection is required unless you request an exception. Such requests must be made in writing and the Agency must provide written concurrence. Inspection services are to be provided by the consulting engineer unless other arrangements are requested in writing and concurred with by the Agency. A resume of qualifications of any resident inspector(s) will be submitted

to the owner and Agency for review and concurrence prior to the pre-construction conference. The resident inspector(s) must attend the preconstruction conference.

36. Preconstruction Conference – A preconstruction conference will be held prior to the issuance of the Notice to Proceed. The consulting engineer will review the planned development with the Agency, owner, resident inspector, attorney, contractor, other funders, and other interested parties, and will provide minutes of this meeting to the owner and Agency.

37. Inspections - The Agency requires a preconstruction conference, pre-final, final, and warranty inspections. Your engineer will schedule a warranty inspection with the contractor and the Agency before the end of the [one-year] warranty period to address and/or resolve any outstanding warranty issues. The Agency will conduct an inspection with you of your records management system at the same time and will continue to inspect the facility and your records system every three years for the life of the loan. See Section VII of this letter.

38. Change Orders – A Change Order must be submitted for all modifications to the approved scope of work, including existing contracts. This includes non-physical modifications such as any time extension requests. Prior written Agency concurrence is required for all Change Orders.

39. Payments – Prior Agency concurrence is required for all invoices and requests for payment before Agency funds will be released. Requests for payment related to a contract or service agreement will be signed by the owner, project engineer, and contractor or service provider prior to Agency concurrence. Invoices not related to a construction contract or service agreement will include the owner's written concurrence.

40. Use of Remaining Funds – As stated above, applicant contribution and connection or tap fees will be the first funds expended in the project. Funds remaining after all costs incident to the basic project have been paid or provided will be handled as follows:

a. Funds remaining after the applicant contribution and connection fees may be considered in direct proportion to the amounts of funding obtained from each source. The use of Agency funding will be limited to eligible loan and grant purposes, provided the use will not result in major changes to the original scope of work and the purpose of the loan and grant remains the same.
b. Any reductions in the Agency funding will be first applied to the grant funds.
c. Grant funds not expended for authorized purposes will be cancelled (de-obligated) within 90 days of final completion of project. Prior to actual cancellation, you, your attorney and engineer will be notified of the Agency's intent to cancel the remaining funds and given appropriate appeal rights.
d. Under no circumstances is it appropriate to use remaining funds as contributions to a new project outside the scope of the funded project.
e. Loan funds that are not needed will be cancelled (de-obligated) prior to loan closing.

41. Technical, Managerial and Financial Capacity - It is required that members of the Board of Directors, City Council members, trustees, commissioners and other governing members possess the necessary technical, managerial, and financial capacity skills to consistently comply with pertinent Federal and State laws and requirements. It is recommended members receive training within one year of appointment or election to the governing board, and a refresher training for all governing members on a routine basis. The content and amount of training should be tailored to the needs of the individual and the

utility system. Technical assistance providers are available to provide this training for your organization, often at no cost. Contact the Agency for additional information.

42. Reporting Requirements Related to Expenditure of Funds -- An annual audit under 2 CFR 200 is required if you expend $750,000 or more in Federal financial assistance per fiscal year. The total Federal funds expended from all sources shall be used to determine Federal financial assistance expended. Expenditures of interim financing are considered Federal expenditures.

All audits are to be performed in accordance with 2 CFR Part 200, as adopted by USDA through 2 CFR Part 400. Further guidance on preparing an acceptable audit can be obtained from the Agency. The audit must be prepared by an independent licensed Certified Public Accountant, or a State or Federal auditor if allowed by State law and must be submitted within 9 months of your fiscal year end. Both the audit and accompanying management report must be submitted for review.

If an audit is required, you must enter into a written agreement with the auditor and submit a copy of that agreement to the Agency prior to the advertisement of construction bids. The audit agreement may include terms and conditions that the borrower and auditor deem appropriate; however, the agreement should include the type of audit to be completed, the time frame in which the audit will be completed, and how irregularities will be reported.

SECTION VII – SERVICING REQUIREMENTS DURING THE TERM OF THE LOAN

43. Prepayment and Extra Payments - Prepayments of scheduled installments, or any portion thereof, may be made at any time at the option of borrower, with no penalty.

Security instruments, including bonding documents, must contain the following language regarding extra payments, unless prohibited by State statute:

> *Prepayments of scheduled installments, or any portion thereof, may be made at any time at the option of borrower. Refunds, extra payments and loan proceeds obtained from outside sources for the purpose of paying down the Agency debt, shall, after payment of interest, be applied to the installments last to become due under this note and shall not affect the obligation of borrower to pay the remaining installments as scheduled in your security instruments.*

44. Annual Financial Reporting/Audit Requirements – You are required to submit an annual financial report at the end of each fiscal year. The annual report will be certified by the appropriate organization official, and will consist of financial information, a current rate schedule, and listing of board members with their terms. Financial statements must be prepared on an accrual basis of accounting in accordance with generally accepted accounting principles (GAAP). The annual report will include separate reporting for each water and waste disposal facility, and itemized cash accounts by type (debt service, short-lived assets, etc.) under each facility. All records, books and supporting material are to be retained for three years after the issuance of the annual report. Technical assistance is available, at no cost, with preparing financial reports.

The type of financial information that must be submitted is specified below:

a. **Audits** – An audit under the Single Audit Act is required if you expend $750,000 or more in Federal financial assistance per fiscal year. The total Federal funds expended from all sources

shall be used to determine Federal financial assistance expended. Expenditures of interim financing are considered Federal expenditures.

See Section VI for additional information regarding audits.

b. **Financial Statements** – If you expend less than $750,000 in Federal financial assistance per fiscal year, you may submit financial statements in lieu of an audit which include, at a minimum, a balance sheet and an income and expense statement. You may use Form RD 442-2, "Statement of Budget, Income and Equity," and 442-3, "Balance Sheet," or similar format to provide the financial information. The financial statements must be signed by the appropriate borrower official and submitted within 60 days of your fiscal year end.

c. **(if applicable) Quarterly Reports** – Quarterly Income and Expense Statements will be required until the processing office waives this requirement. You may use Form RD 442-2, "Statement of Budget, Income and Equity," or similar format to provide this information. The reports are to be signed by the appropriate borrower official and submitted within 30 days of each quarter's end. The Agency will notify you in writing when quarterly reports are no longer required.

45. Annual Budget and Projected Cash Flow - Thirty days prior to the beginning of each fiscal year, you will be required to submit an annual budget and projected cash flow to this office. The budget must be signed by the appropriate borrower official. Form RD 442-2, "Statement of Budget, Income and Equity," or similar format may be used.

Technical assistance is available at no cost to help you evaluate and complete a rate analysis on your system, as well as completing the annual budget.

46. Graduation - By accepting this loan, you are also agreeing to refinance (graduate) the unpaid loan balance in whole, or in part, upon request of the Government. If at any time the Agency determines you can obtain a loan for such purposes from responsible cooperative or private sources at reasonable rates and terms, you will be requested to refinance. Your ability to refinance will be assessed every other year for those loans that are five years old or older.

47. Security/Operational Inspections – The Agency will inspect the facility and conduct a review of your operations and records management system and conflict of interest policy every three years for the life of the loan. You must participate in these inspections and provide the required information.

48. System for Award Management. You will be required to maintain a Dun and Bradstreet Data Universal Numbering System (DUNS) number and maintain an active registration in the System for Award Management (SAM) database. Further information can be found at paragraph 34 of this letter.

49. Risk and Resiliency Assessment/Emergency Response Plan (RRA/ERP) – The RRA/ERP is further outlined under Section III of this letter. You will be required to submit a certification to the servicing office every five years that the RRA/ERP is current and covers all sites related to the facility. The RRA/ERP documents themselves are not submitted to the Agency. The RRA/ERP must address potential impacts from natural disasters and other emergency events. It should include plans to address impacts of flash flooding in areas where severe drought or wildfires occur. Technical assistance is available in preparing these documents at no cost to you.

50. Insurance. – Insurance requirements are further outlined in Section IV of this letter. You will be required to maintain insurance on the facility and employees as previously described in this letter for the life of the loan.

51. Statutory and National Policy Requirements – As a recipient of Federal funding, you are required to comply with U.S. statutory and public policy requirements, including but not limited to:

a. **Section 504 of the Rehabilitation Act of 1973** – Under Section 504 of the Rehabilitation Act of 1973, as amended (29 U.S.C. 794), no handicapped individual in the United States shall, solely by reason of their handicap, be excluded from participation in, be denied the benefits of, or be subjected to discrimination under any program or activity receiving Agency financial assistance.

b. **Civil Rights Act of 1964** – All borrowers are subject to, and facilities must be operated in accordance with, Title VI of the Civil Rights Act of 1964 (42 U.S.C. 2000d et seq.) and 7 CFR 1901, Subpart E, particularly as it relates to conducting and reporting of compliance reviews. Instruments of conveyance for loans and/or grants subject to the Act must contain the covenant required by Paragraph 1901.202(e) of this Title.

c. **The Americans with Disabilities Act (ADA) of 1990** – This Act (42 U.S.C. 12101 et seq.) prohibits discrimination on the basis of disability in employment, State and local government services, public transportation, public accommodations, facilities, and telecommunications.

d. **Age Discrimination Act of 1975** – This Act (42 U.S.C. 6101 et seq.) provides that no person in the United States shall on the basis of age, be excluded from participation in, be denied the benefits of, or be subjected to discrimination under any program or activity receiving Federal financial assistance.

e. **Limited English Proficiency (LEP) under Executive Order 13166** - LEP statutes and authorities prohibit exclusion from participation in, denial of benefits of, and discrimination under Federally-assisted and/or conducted programs on the ground of race, color, or national origin. Title VI of the Civil Rights Act of 1964 covers program access for LEP persons. LEP persons are individuals who do not speak English as their primary language and who have a limited ability to read, speak, write, or understand English. These individuals may be entitled to language assistance, free of charge. You must take reasonable steps to ensure that LEP persons receive the language assistance necessary to have meaningful access to USDA programs, services, and information your organization provides. These protections are pursuant to Executive Order 13166 entitled, “Improving Access to Services by Persons with Limited English Proficiency” and further affirmed in the USDA Departmental Regulation 4330-005, “Prohibition Against National Origin Discrimination Affecting Persons with Limited English Proficiency in Programs and Activities Conducted by USDA.”

f. **Controlled Substances Act** - Even though state law may allow some activities, as a recipient of Federal funding, you are subject to the Controlled Substances Act. Specific questions about the Controlled Substances Act should be directed to the Servicing Official who will contact the Office of General Counsel, as appropriate.

52. <u>Compliance Reviews and Data Collection</u> – Agency financial programs must be extended without regard to race, color, religion, sex, national origin, marital status, age, or physical or mental handicap. You must display posters (provided by the Agency) informing users of these requirements, and the Agency will monitor your compliance with these requirements during regular compliance reviews.

The Agency will conduct regular compliance reviews of the borrower and its operation in accordance with 7 CFR Part 1901, Subpart E, and 36 CFR 1191, Americans with Disabilities Act (ADA) Accessibility Guidelines for Buildings and Facilities; Architectural Barriers Act (ABA) Accessibility Guidelines. Compliance reviews will typically be conducted in conjunction with the security inspections described in this letter.

If beneficiaries (users) are required to complete an application or screening for the use of the facility or service that you provide, you must request and collect data by race (American Indian or Alaska Native, Asian, Black or African American, White); ethnicity (Hispanic or Latino, Not Hispanic or Latino); and by sex. The Agency will utilize this data as part of the required compliance review.

<u>SECTION VIII – REMEDIES FOR NON-COMPLIANCE</u>

Non-compliance with the conditions in this letter or requirements of your security documents will be addressed under the provisions of Agency regulations, statutes, and other applicable policies.

We look forward to working with you to complete this project. If you have any questions, please contact Michael Dean at 928-910-4471 or by e-mail at Michael.dean2@usda.gov.

Sincerely,

JEFFREY HAYS

Digitally signed by JEFFREY HAYS
Date: 2022.04.08 09:21:06 -07'00'

JEFFREY A. HAYS
Community Programs Director

Attachments

cc: Community Programs Director
Accountant
Attorney
Bond Counsel
Engineer

FORMS and BULLETINS:

Form AD-3031 “Assurance Regarding Felony Convictions or Tax Delinquent Status for Corporate Applicants” – Item 30
Internal Revenue Service Form 1023, Appendix A, “Sample Conflict of Interest Policy” - Item 15
Form RD 440-22, “Promissory Note” – Item 6
Form RD 442-2, “Statement of Budget, Income and Equity” – Items 45 and 46
Form RD 442-3, “Balance Sheet” – Item 45
Form RD 442-7, “Operating Budget” – Item 20
Form RD 442-20, “Right-of-Way Easement” – Item 14
Form RD 442-21, “Right-of-Way Certificate” – Item 14
Form RD 442-22, “Opinion of Counsel Relative to Rights-of-Way” – Item 14
Form RD 1927-9, “Preliminary Title Opinion” – Item 14
Form RD 1927-10, “Final Title Opinion” – Item 28
Form RD 1940-1, “Request for Obligation of Funds” – Pages 1 and 2
Form RD 1942-8, “Resolution of Members or Stockholders” – Item 6
Form RD 1942-46, “Letter of Intent to Meet Conditions” – Page 2
Form RD 3550-28, “Authorization Agreement for Preauthorized Payments” – Items 32 and 33
Form UCC-1, “Financing Statement” – Item 6
Form UCC-1Ad, “UCC Financing Statement Addendum” – Item 6
SF 3881, “ACH Vendor/Miscellaneous Payment Enrollment Form” – Item 24
RUS Bulletin 1780-7, “Legal Services Agreement” – Item 13
RUS Bulletin 1780-9, “Water Users Agreement” - Items 15 and 17
RUS Bulletin 1780-12, “Water and Waste System Grant Agreement” – Item 6
RUS Bulletin 1780-26, “Guidance for the Use of EJCDC Documents on Water and Waste Projects with RUS Financial Assistance” – Items 11 and 12
RUS Bulletin 1780-27, “Loan Resolution (Public Bodies)” – Item 6
RUS Bulletin 1780-28, “Loan Resolution Security Agreement” – Item 6

Appendix A

A. Reporting Total Compensation of Recipient Executives

In the rare instance in which all of the following apply, please contact your POB Specialist for language to include in the LOC:

1. The total Federal funding authorized to date under this award is $30,000 or more;

2. In the preceding fiscal year, the applicant received—

   (A) 80 percent or more of their annual gross revenues from Federal procurement contracts (and subcontracts) and Federal financial assistance subject to the Transparency Act, as defined at 2 CFR 170.320 (and subawards); and

   (B) $25,000,000 or more in annual gross revenues from Federal procurement contracts (and subcontracts) and Federal financial assistance subject to the Transparency Act, as defined at 2 CFR 170.320 (and subawards); and

3. The public does not have access to information about the compensation of the executives through periodic reports filed under section 13(a) or 15(d) of the Securities Exchange Act of 1934 (15 U.S.C. 78m(a), 78o(d)) or section 6104 of the Internal Revenue Code of 1986. (To determine if the public has access to the compensation information, see the U.S. Security and Exchange Commission total compensation filings at http://www.sec.gov/answers/execomp.htm.)

B. Subaward and Subrecipients

In the rare instance in which there is a subrecipient in the project, please contact your POB Specialist for language to include in the LOC:

Subrecipient means an entity that:

i. Receives a subaward from the recipient under this award; and

ii. Is accountable to the recipient for the use of the Federal funds provided by the subaward.

a. Subaward means an award provided by a pass-through entity to a subrecipient for the subrecipient to carry out part of a Federal award received by the pass-through entity. It does not include payments to a contractor or payments to an individual that is a beneficiary of a Federal program.

EXHIBIT

±2.50 ACRES

LOCATED IN SECTION 23, T.16N., R.2E., GILA & SALT RIVER MERIDIAN, YAVAPAI COUNTY, ARIZONA

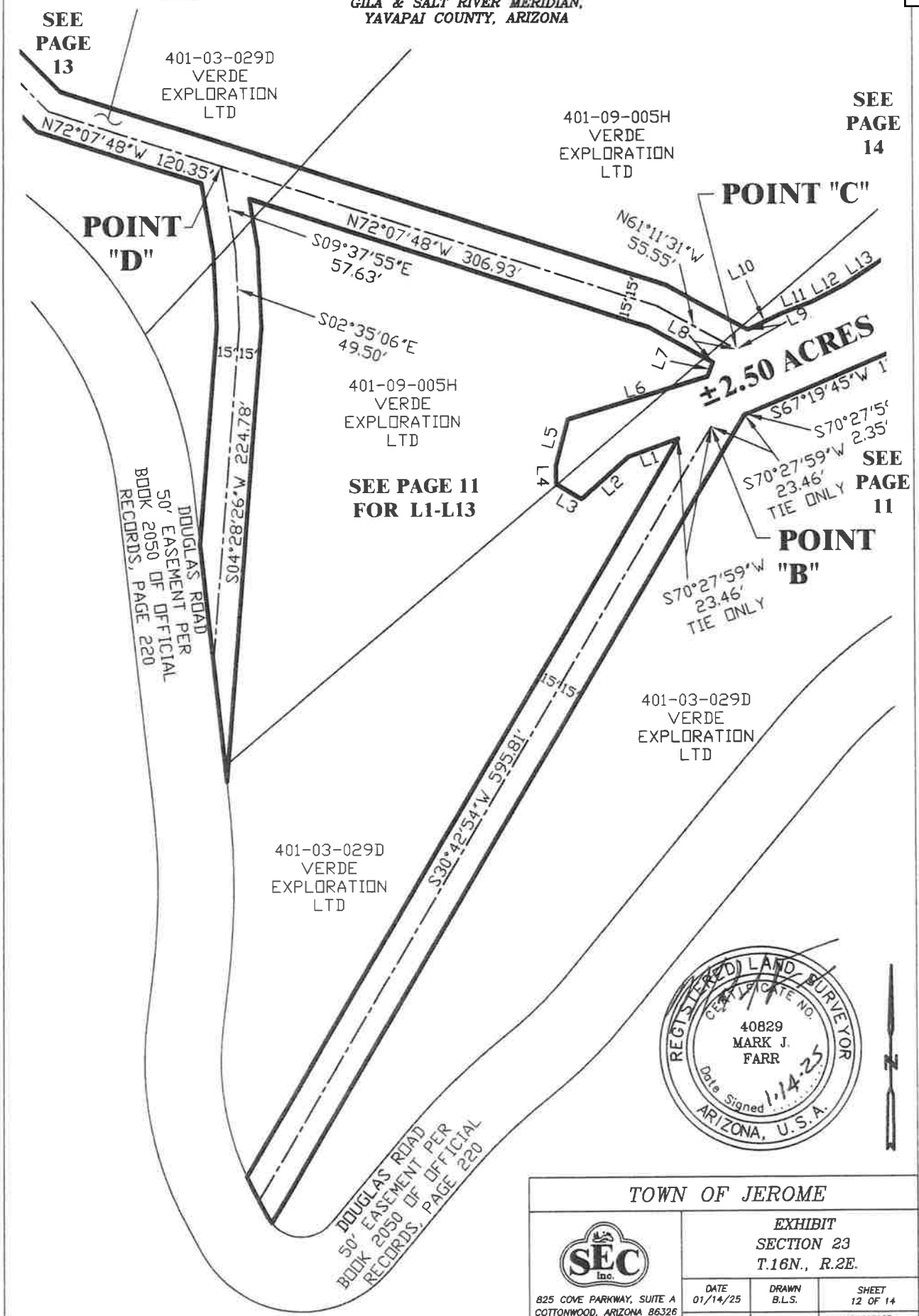

TOWN OF JEROME		
SEC Inc. 825 COVE PARKWAY, SUITE A COTTONWOOD, ARIZONA 86326 (928) 634-5889 www.sec-landmgt.com	EXHIBIT SECTION 23 T.16N., R.2E.	
	DATE 01/14/25	DRAWN B.L.S.
	SCALE NONE	CHECKED M.J.F.
	SHEET 12 OF 14	19-1101CE Town Jerome "Exhibit.dwg"

Town of Jerome
Pre-Bid Meeting Sign-In Sheet

Thursday, May Item I. **6 M**

Town of Jerome WWTP Improvements Pre-Bid Meeting Sign-In

Company	Contact Name	Phone	Email Address
Winwater of Phoenix	Austin Malcom	308-224-5283	apmalcom@winsupply.com
Winwater PHX	Griffin Dvinack	320-212-5535	griffin@PHXWinWater.com
TECHNOLOGY CONSTRUCTION	GARRETT SWEETLAND	602-292-7871	garrett@TCIAZ.NET
KLEAR CIVIL CORP	GARRY HAGDEM	623-742-8329	garry.hagdem@KCORPCORP.com
HAYDON CONSTRUCTION	MIKE SHIPLEY	480.901.0537 ~~480-32~~	MSHIPLEY@HAYDON.COM
~~[illegible]~~			
Eagle Mtn	Travis Johanson	928-22-0-0767	Travis@Emcaz.com
EAGLE MNT CONST	JASON WOODS	928-600-1107	JASON.WOODS@EMCAZ.COM
L&M PAINTING	GILLES BUSSIERES	602-576-2710	GILLES@LMPAINTINGCO.COM
SEC	Richard Noone	928 634 5889	rnoone@sec-landmgt.com

Town of Jerome
Pre-Bid Meeting Sign-In Sheet

Thursday, May [illegible]6
M

Town of Jerome WWTP Improvements Pre-Bid Meeting Sign-In

Company	Contact Name	Phone	Email Address
Hensel Phelps	Larry V. Tackett	623-698-1186	ltackett@henselphelps.com
Kasey Martin	Rain For Rent	480-276-5068	Kmartin@rainforrent.com
LOENBRO	JON CAMPING	406 231 7293	JCAMPING@LOENBRO.COM
B4 Enterprises	Kedrick Jessop	435-704-6583	Kedrick@b4concrete.com
FANN Environmental	David Syme	928-308-6812	dimsyme@FANNENVIRONMENTAL.com
VIRTUAL ATTENDEES			
FILANC	Klete Rogers		krogers@filanc.com
FILANC	Dan East		deast@filanc.com
PACE	Duong Do	(714) 481-7223	do@pacewater.com
PACE	Andrea Jaycox	(602) 502-9683	ajaycox@pacewater.com
PACE	Nathan Tesch	(602) 695-4679	ntesch@pacewater.com
Superior Underground Services	Chris White	480-261-7800	cwhite@superiorundergroundservices.com

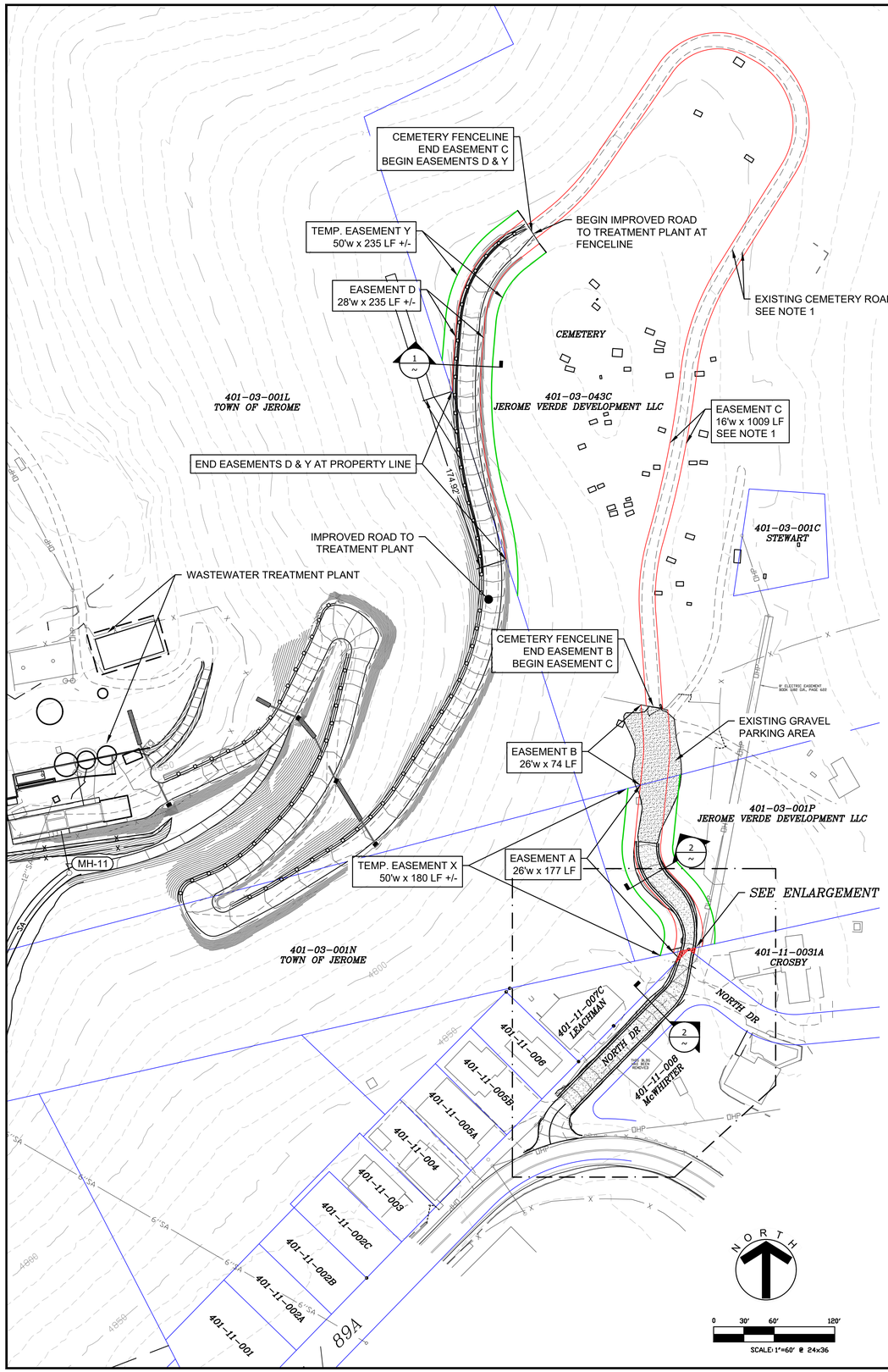

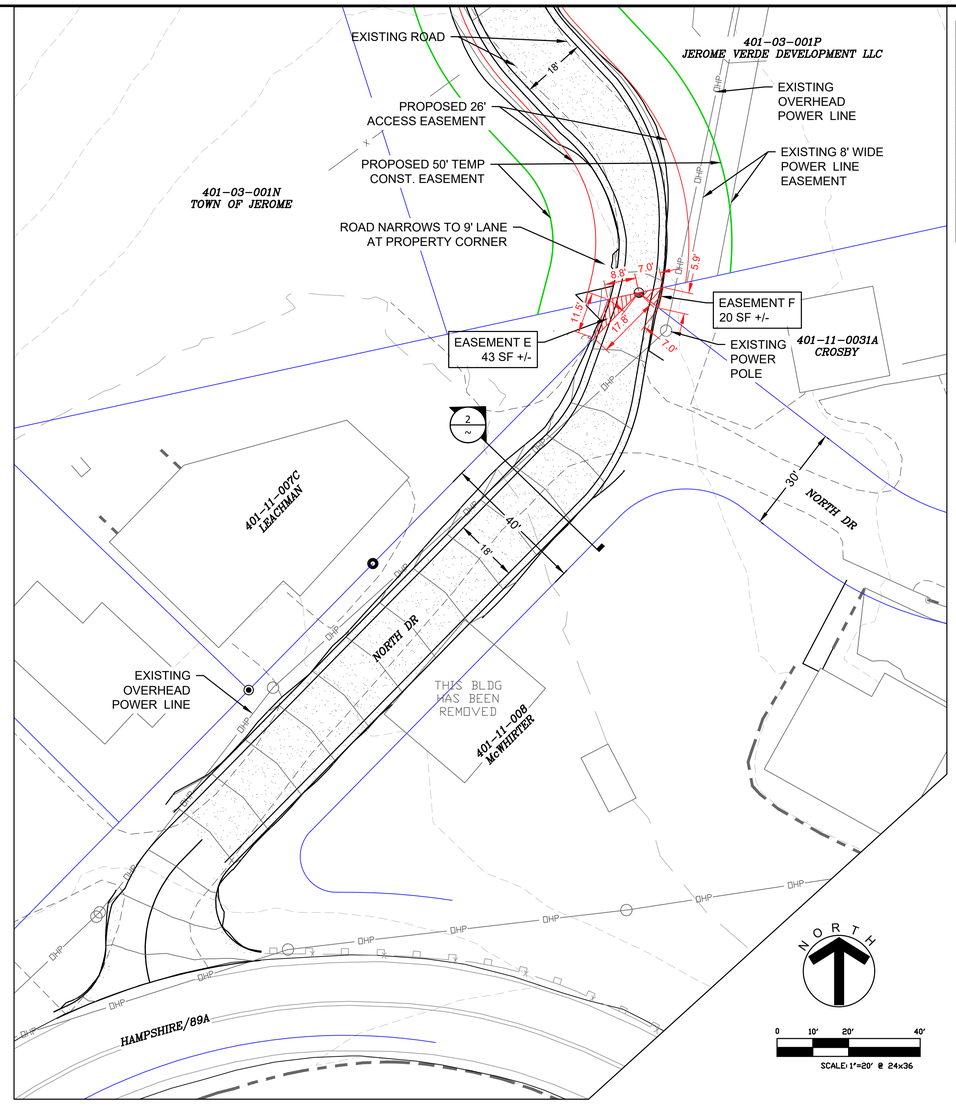

SUMMARY OF ACCESS EASEMENTS					
EASMT	LOCATION	LENGTH (FT)	WIDTH (FT)	AREA (SF)	AREA (AC)
A	401-03-001P	177	26	4,602	0.106
B	401-03-043C	74	26	1,924	0.044
C	401-03-043C	1,009	16	16,144	0.371
D	401-03-043C	235	28	6,580	0.151
E	401-11-007C	NA	NA	43	NA
F	401-11-031A	NA	NA	20	NA
X*	401-03-001P	180	50	4,320*	0.099
Y*	401-03-043C	NA	NA	5,170*	0.119
*EASEMENTS "X" & "Y" ARE TEMPORARY CONSTRUCTION EASEMENTS. AREA= TOTAL EASEMENT MINUS PERMANENT EASEMENT					

NOTES

1. THE CEMETERY IS A HISTORICAL SITE. NO IMPROVEMENTS ARE ALLOWED BEYOND THE EXISTING ROADWAY. THE PROPOSED EASEMENT THROUGH THE SITE SHALL BE FOR THE USE AND MAINTENANCE OF THE EXISTING ROADWAY.
2. THE EXISTING ROAD ALONG NORTH STREET WILL BE WIDENED TO 18' FOR TRUCK ACCESS TO THE TREATMENT PLANT. SEE DETAIL 2.
4. THE EXISTING ROAD FROM NORTH STREET TO THE CEMETARY WILL BE WIDENED FOR TRUCK ACCESS TO THE TREATMENT PLANT. SEE DETAIL 2.
5. THE EXISTING ROAD FROM THE CEMETARY TO THE TREATMENT PLANT WILL BE WIDENED TO 18' FOR TRUCK ACCESS. SEE DETAIL 1.
6. 50' WIDE TEMPORARY CONSTRUCTION EASEMENTS ARE PROPOSED FOR CONSTRUCTING THE ACCESS ROADS TO THE CEMETARY AND TREATMENT PLANT.
7. TOTAL EASEMENT AREAS ARE APPROXIMATE BASED ON LINEAR FOOTAGE. FINAL AREAS WILL BE MORE PRECISE AND MAY VARY.

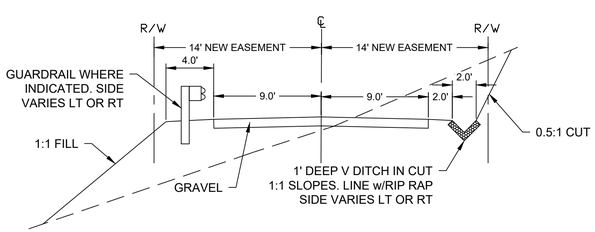

1 TYPICAL ACCESS ROAD TO TREATMENT PLANT 1"=6'

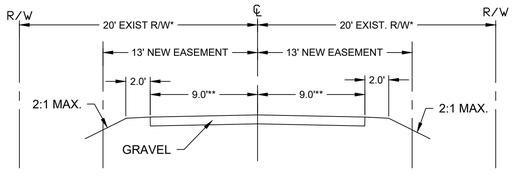

*NORTH DRIVE HAS 40' EXISTING RIGHT OF WAY.
**LANE WIDTH VARIES PER PLAN

2 TYPICAL ACCESS ROAD HWY 89A TO CEMETARY 1"=6'

THIS EXHIBIT SHOWS PROPOSED EASEMENTS FOR ACCESS TO THE TOWN OF JEROME WASTEWATER TREATMENT PLANT. EASEMENTS SHALL BE FOR ROAD CONSTRUCTION & MAINTENANCE AND FOR ACCESS TO THE TREATMENT PLANT. TO BE OBTAINED BY THE TOWN OF JEROME.

EXHIBIT. NOT FOR CONSTRUCTION. FOR AGENCY REVIEW ONLY

TOWN OF JEROME
WASTEWATER TREATMENT PLANT IMPROVEMENTS

SEC Inc.
825 COVE PARKWAY
COTTONWOOD, AZ 86326
928-282-7787

PROPOSED ACCESS EASEMENTS EXHIBIT

DATE	DRAWN	SHEET
4/11/24	NMW	1 OF 1
SCALE	CHECKED	PROJECT NO.
AS SHOWN	KG	19-1101CE

©2024, SEC, Inc., All Rights Reserved. This document is protected under the United States Copyright Act. No part may be reproduced in any form or by any means or stored in a database or retrieval system, without the prior written permission of SEC, Inc. These plan documents, however, plan documents could contain unintentional technical inaccuracies, typographical errors or omissions. Users of these plan documents should understand that it is highly probable that errors and omissions will occur in any plan/document preparation process.

S:\LAND PROJECTS 2004 ENGINEERING\19-1101CE JEROME WWTP\DWG\C3D\EXHIBITS\ROAD EASEMENTS.DWG

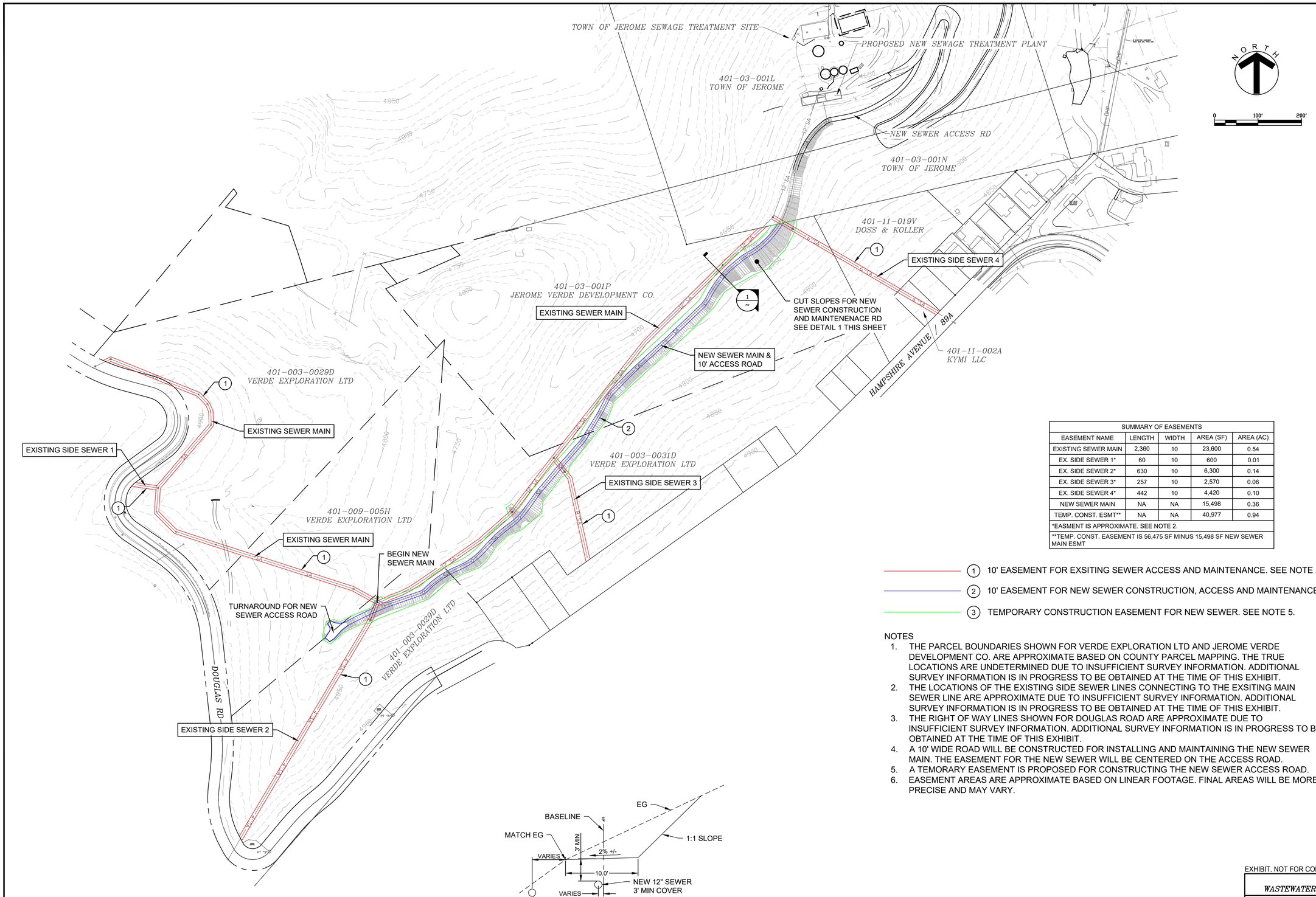

SUMMARY OF EASEMENTS				
EASEMENT NAME	LENGTH	WIDTH	AREA (SF)	AREA (AC)
EXISTING SEWER MAIN	2,360	10	23,600	0.54
EX. SIDE SEWER 1*	60	10	600	0.01
EX. SIDE SEWER 2*	630	10	6,300	0.14
EX. SIDE SEWER 3*	257	10	2,570	0.06
EX. SIDE SEWER 4*	442	10	4,420	0.10
NEW SEWER MAIN	NA	NA	15,498	0.36
TEMP. CONST. ESMT**	NA	NA	40,977	0.94
*EASMENT IS APPROXIMATE. SEE NOTE 2.				
**TEMP. CONST. EASEMENT IS 56,475 SF MINUS 15,498 SF NEW SEWER MAIN ESMT				

(1) 10' EASEMENT FOR EXSITING SEWER ACCESS AND MAINTENANCE. SEE NOTE 2.

(2) 10' EASEMENT FOR NEW SEWER CONSTRUCTION, ACCESS AND MAINTENANCE. SEE NOTE 4

(3) TEMPORARY CONSTRUCTION EASEMENT FOR NEW SEWER. SEE NOTE 5.

NOTES

1. THE PARCEL BOUNDARIES SHOWN FOR VERDE EXPLORATION LTD AND JEROME VERDE DEVELOPMENT CO. ARE APPROXIMATE BASED ON COUNTY PARCEL MAPPING. THE TRUE LOCATIONS ARE UNDETERMINED DUE TO INSUFFICIENT SURVEY INFORMATION. ADDITIONAL SURVEY INFORMATION IS IN PROGRESS TO BE OBTAINED AT THE TIME OF THIS EXHIBIT.
2. THE LOCATIONS OF THE EXISTING SIDE SEWER LINES CONNECTING TO THE EXSITING MAIN SEWER LINE ARE APPROXIMATE DUE TO INSUFFICIENT SURVEY INFORMATION. ADDITIONAL SURVEY INFORMATION IS IN PROGRESS TO BE OBTAINED AT THE TIME OF THIS EXHIBIT.
3. THE RIGHT OF WAY LINES SHOWN FOR DOUGLAS ROAD ARE APPROXIMATE DUE TO INSUFFICIENT SURVEY INFORMATION. ADDITIONAL SURVEY INFORMATION IS IN PROGRESS TO BE OBTAINED AT THE TIME OF THIS EXHIBIT.
4. A 10' WIDE ROAD WILL BE CONSTRUCTED FOR INSTALLING AND MAINTAINING THE NEW SEWER MAIN. THE EASEMENT FOR THE NEW SEWER WILL BE CENTERED ON THE ACCESS ROAD.
5. A TEMORARY EASEMENT IS PROPOSED FOR CONSTRUCTING THE NEW SEWER ACCESS ROAD.
6. EASEMENT AREAS ARE APPROXIMATE BASED ON LINEAR FOOTAGE. FINAL AREAS WILL BE MORE PRECISE AND MAY VARY.

1 TYPICAL SEWER CONSTRUCTION ROAD
1"=6'

THIS EXHIBIT SHOWS PROPOSED EASEMENTS FOR CONSTRUCTION AND MAINTENANCE OF EXISTING AND NEW SEWER LINES TO BE OBTAINED BY THE TOWN OF JEROME.

EXHIBIT. NOT FOR CONSTRUCTION. FOR AGENCY REVIEW ONLY

TOWN OF JEROME
WASTEWATER TREATMENT PLANT IMPROVEMENTS

SEC Inc.
825 COVE PARKWAY
COTTONWOOD, AZ 86326
928-282-7787

PROPOSED SEWER EASEMENTS EXHIBIT

DATE	DRAWN	SHEET
2/28/24	NMW	1 OF 1
SCALE	CHECKED	PROJECT NO.
AS SHOWN	KG	19-1101CE

©2024, SEC, Inc., All Rights Reserved. This document is protected under the United States Copyright Act. No part may be, reproduced in any form or by any means or stored in a database or retrieval system, without the prior written permission of SEC, Inc. These plans/documents have been prepared using technical knowledge that would be applied by other qualified registrants who practice the same profession in the same area and at the same time. Efforts have been made to be as accurate as possible. However, plans/documents could contain unintentional technical inaccuracies, typographical errors or omissions. Users of these plans/documents should understand that it is highly probable that errors and omissions will occur in any plan/document preparation process.

USDA
United States Department of Agriculture

Rural Development

State Office

230 N. 1st Avenue
#206
Phoenix, AZ 85003

Voice 602-280-8701
Fax 855-699-8035
TDD 602-280-8705

April 8, 2022

Town of Jerome, Arizona
600 Clark Street (PO Box 335)
Jerome, AZ 86331

SUBJECT: Letter of Conditions
Recipient Name: Town of Jerome, Arizona

Project Name: Sewer Rehab SEARCH 2020
CFDA NUMBER – 10.760

RUS Loan (SECD):	$1,819,000.00
RUS Grant (SECD)	$4,830,000.00
SEARCH Grant:	$30,000.00 (previously funded)

Dear Ms. Gallagher:

This letter establishes conditions which must be understood and agreed to by you before further consideration may be given to your application. The loan and/or grant will be administered on behalf of the Rural Utilities Service (RUS) by the State and Area staff of USDA Rural Development (RD), both of which are referred to throughout this letter as the Agency. Any changes in project cost, source of funds, scope of project, or any other significant changes in the project or applicant must be reported to and concurred with by the Agency by written amendment to this letter. This includes any significant changes in the Applicant's financial condition, operation, organizational structure or executive leadership. Any changes made without Agency concurrence shall be cause for discontinuing processing of the application.

This letter does not constitute loan and/or grant approval, nor does it ensure that funds are or will be available for the project. The funding is being processed on the basis of a loan not to exceed $1,819,000.00 and/or a grant not to exceed $4,830,000.00. The loan and/or grant will be considered approved on the date Form RD 1940-1, "Request for Obligation of Funds" is signed by the Agency approval official.

The applicant will ensure projects are completed in a timely, efficient, and economical manner. You must meet all conditions set forth under Section III – Requirements Prior to Advertising for Bids within 1 year of this letter.

If you do not meet the conditions of this letter, the Agency reserves the right to withdraw Agency funding.

If you agree to meet the conditions set forth in this letter and desire further consideration be given to your application, please complete and return the following forms within 14 days:

Form RD 1942-46, "Letter of Intent to Meet Conditions"

USDA is an equal opportunity provider, employer and lender.

Form RD 1940-1, "Request for Obligation of Funds"

All parties may access information and regulations referenced in this letter at our website located at https://www.rd.usda.gov/programs-services/water-environmental-programs/water-waste-disposal-loan-grant-program.

The conditions are as follows:

SECTION I - PROJECT SCOPE

1. Project Description – Funds will be used to design, purchase, and install necessary equipment and components to address high ammonia and copper levels in the area along with line improvements to the aging wastewater system. This project is addressing the Arizona Department of Environmental Quality (ADEQ) consent order to meet compliance.

Facilities will be designed and constructed in accordance with sound engineering practices and must meet the requirements of Federal, State, and local agencies. The proposed facility design must be based on the Preliminary Engineering Report (PER), prepared by PACE dated/amended December 2021, as concurred with by the Agency.

2. Project Funding – The Agency is offering the following funding for your project:

RUS Loan (SECD)-	$ 1,819,000.00
RUS Grant -	$ 4,830,000.00
SEARCH Grant -	$30,000.00 (previously funded)
Other Funding -	$ -0-

TOTAL PROJECT COST - $ 6,679,000.00

Any changes in funding sources following obligation of Agency funds must be reported to the processing official. Prior to loan closing, any increase in non-Agency funding will be applied first as a reduction to Agency grant funds, up to the total amount of the grant, and then as a reduction to Agency loan funds.

The applicant must certify that they have exhausted all other funding avenues and have no pending funding considerations from any other sources. Further, the applicant must certify that they do not intend to apply anywhere else for funding for this project. If, after obligation of Agency funds, other funding becomes available, the Agency reserves the right to deobligate any and all funding for this project and to re-underwrite. This may result in the offering of a different funding package to for this project.

Prior to advertisement for construction bids, you must provide evidence of applicant contributions and other funding sources. This evidence should include a copy of the commitment letter. Agency funds will not be used to pre-finance funds committed to the project from other sources.

3. Project Budget – Funding from all sources has been budgeted for the estimated expenditures as follows:

Project Costs:	**Total Budgeted:**
Development/Construction	
Access Road	$778,553
10" Sewer Line Improv.	$925,000
Treatment Plant Site	$558,500
Concrete Tanks	$142,500
General Conditions	$806,306
Equipment	$1,435,000
Contingency	$383,893
Engineering Fees	
Includes:	
Pre-Development (PER/ER)	$30,000
Study & Report Phase	$69,020
Design Phase	$646,500
Permitting & Fees	$89,000
Bid Services	$45,000
Engineering Const. Services	$501,000
Post Construction Services	$5,000
Contingency (Non-Construction)	$67,776
Interest/Fees – Const. Loan	$167,452
Interest/Fees – Bridge Loan	$28,500
TOTAL	$6,679,000

Project feasibility and funding will be reassessed if there is a significant change in project costs after bids are received. Obligated loan and/or grant funds not needed to complete the proposed project will be deobligated. Any reduction will be applied to Agency grant funds first. If actual project costs exceed the project cost estimates, an additional contribution by the Owner may be necessary. An "Amended Letter of Conditions" will be issued for any changes to the total project budget.

4. Project Timeline – To ensure that the project proceeds in a timely manner, key processing milestones have been established in accordance with the PER or other Agency approved documentation. **Projects should be completed and Agency funds fully disbursed within three years of obligation.** By agreeing to the terms herein, you agree to comply with the milestones identified below. If, for any reason, one or more of the milestones cannot be met, you must notify the Agency in writing at least 30 days prior to the referenced date. Should your final completion date become more than three years after obligation the written request will follow the procedures outlined in Section VI of this letter, including the submission of not less than 90 days prior to the benchmark. The correspondence must contain a valid explanation as to why the milestone cannot be met and include a proposed revised project completion schedule. If the Agency agrees to the modification, a written confirmation will be issued. The Agency reserves the right to de-obligate loan and/or grant funds, or take other appropriate action, if the established or amended deadlines are not met.

Milestone	Date
Design Phase	09/07/2022
Bid Process and Permitting	12/30/2022
Start Construction Period	01/16/2023
Substantial Completion	12/29/2023
Final Completion	06/12/2024

SECTION II – RATES & TERMS

5. Interest Rates and Loan Terms – The interest rate will be the lower of the rate in effect at the time of loan approval or the time of loan closing, unless you request otherwise. Should the interest rate be reduced, the payment will be recalculated to the lower amount. The payment due date will be established as the day that the loan closes.

Your loan will be scheduled for repayment over a period of 40 years. Payments will be equal monthly amortized installments, beginning one month after closing. For planning purposes, use a 1.25% interest which provides for a monthly payment of $4,821.00. The precise payment amount will be based on the interest rate at which the loan is closed and may be different than the one above.

6. Security – The loan will be secured by a General Obligation, Revenue, or Other bond with first, or parity lien position in the amount of $1,819,000.00. The bond will be fully registered as to both principal and interest in the name of the "United States of America, Acting through the United States Department of Agriculture." Bond Counsel will be utilized in preparation of these documents.

The bond/security instruments and any ordinance or resolution relating thereto must not contain any provision in conflict with the Agency Loan Resolution, applicable regulations, or associated laws. There must be no defeasance or refinancing clause in conflict with the graduation requirements of 7 U.S.C. 1983.

If the loan will be on parity with another lender/s, the bond/security instrument must specify that, in the event of default, each lender will be affected on a proportionate basis.

Additional security requirements are contained in RUS Bulletin 1780-27, "Loan Resolution (Public Bodies) and/or RUS Bulletin 1780-12, "Water and Waste System Grant Agreement". A draft of all security instruments, including draft bond resolution, must be reviewed and concurred in by the Agency prior to advertising for bids. Bond/loan resolutions must be duly adopted and executed prior to loan closing.

The Grant Agreement will be executed prior to the first disbursement of grant funds. The grantee understands that any property acquired or improved with Federal grant funds may have use and disposition conditions which apply to the property as provided by 2 CFR part 200 in effect at this time and as may be subsequently modified. The grantee understands that any sale or transfer of property is subject to the interest of the United States Government in the market value in proportion to its participation the project.

7. Reserves – Reserves must be properly budgeted and set aside to maintain the financial viability and sustainability of any operation. Reserves are important to fund unanticipated emergency repairs, to assist with debt service should the need arise, and for the replacement of assets which have a useful life less

than the repayment period of the loan. The following reserves are required to be established as a condition of this loan:

a. **Debt Service Reserve** – Unless a General Obligation Bond secures the lien, as a part of this Agency loan proposal, you must establish a debt service reserve fund equal to at least one annual loan installment that accumulates at the rate of 10% of one annual payment per year for ten years or until the balance is equal to one annual loan payment. For planning purposes, 10% of the proposed loan installment would equal $482.10 per month; this amount should be deposited monthly until a total of $57,852 has accumulated. Prior written concurrence from the Agency must be obtained before funds may be withdrawn from this account during the life of the loan. When funds are withdrawn during the life of the loan, deposits will continue as designated above until the fully funded amount is reached.

b. **Short-Lived Asset Reserve** – You must establish a short-lived asset reserve fund. Based on the PER, you must deposit at least $3,333 into the short-lived asset reserve fund annually for the life of the loan to pay for repairs and/or replacement of major system assets. It is your responsibility to assess your facility's short-lived asset needs on a regular basis and adjust the amount deposited to meet those needs.

SECTION III –REQUIREMENTS PRIOR TO ADVERTISING FOR BIDS

8. Organization – The Bond Counsel transcripts of proceedings must show that your organization is a duly incorporated public body and has continued legal existence. Your organization must have the authority to own, construct, operate, and maintain the proposed facility, as well as for borrowing money, pledging security and raising revenues.

9. Suspension and Debarment Screening – You will be asked to provide information on the principals of your organization. Agency staff must conduct screening for suspension and debarment of the entity, as well as its principals through the Do Not Pay Portal.

a. Principal –
    i. An officer, director, owner, partner, principal investigator, or other person within a participant with management or supervisory responsibilities related to a covered transaction; or
    ii. A consultant or other person, whether or not employed by the participant or paid with federal funds, who –
        1. Is in a position to handle federal funds;
        2. Is in a position to influence or control the use of those funds; or,
        3. Occupies a technical or professional position capable of substantially influencing the development or outcome of an activity required to perform the covered transaction. (2 CFR §180.995)

10. Environmental Requirements – The project, as proposed, has been evaluated to be consistent with the National Environmental Policy Act. Other Federal, State, tribal, and local laws, regulations and/or permits may apply or be required. If the project or any project element deviates from or is modified from the originally approved project, additional environmental review may be required.

This project has applied the Nationwide Programmatic Agreement Among the U.S. Department of Agriculture Rural Development Programs, National Conference of State Historic Preservation Officers,

and the Advisory Council on Historic Preservation for Sequencing Section 106 (NPA). This agreement allows the Agency to obligate funds prior to the completion of Section 106 of the National Historic Preservation Act. The Agreement stipulates, among other things, that the Section 106 process must be complete prior to the awarding of funds and prior to construction. Rural Development is in receipt of your signed NPA Awareness Certification form. In the Awareness Certification, you have acknowledged your awareness of these and other requirements and have agreed that you must complete the Section 106 process before the environmental review component of your application can be finalized and before construction. These historic preservation requirements must be met prior to final approval and prior to taking any action that would have an adverse effect on historic properties or hinder completion of the consultation process required under Section 106 of the National Historic Preservation Act (NHPA). Do not initiate any type of ground disturbing activity, enter into construction contracts, initiate construction, rehabilitation, or purchase land or equipment prior to receiving notification from the Agency that these requirements have been met. Taking any of these actions prior to completion of the required reviews could result in loss of program funds.

11. Engineering Services – You have been required to complete an Agreement for Engineering Services, which should consist of the Engineers Joint Contract Documents Committee (EJCDC) documents as indicated in RUS Bulletin 1780-26, "Guidance for the Use of EJCDC Documents on Water and Waste Projects with RUS Financial Assistance," or other approved form of agreement. The Agency will provide concurrence prior to advertising for bids and must approve any modifications to this agreement.

12. Contract Documents, Final Plans, and Specifications- All development will be completed by contract in accordance with applicable provisions of RUS Instruction 1780, Subpart C – Planning, Designing, Bidding, Contracting, Constructing and Inspections, (copy available upon request), and in compliance with all statutory requirements. You are responsible to share this with your engineer before pre-design.

a. The plans and specifications and all proposals required by law must be approved by Arizona Department of Environmental Quality.

b. In preparing final design and providing service to the planned project area, you and your engineer will comply with all zoning and planning requirements of the appropriate governing bodies where service is to be provided.

c. The Agency will need to concur in the plans and specifications prior to advertising for bids. The Agency may require an updated cost estimate if a significant amount of time has elapsed between the original project cost estimate and advertising for bids.

d. The use of any procurement method other than competitive sealed bids must be requested in writing and approved by the Agency.

e. The contract documents must consist of the EJCDC construction contract documents as indicated in RUS Bulletin 1780-26 or other Agency-approved forms of agreement.

f. **American Iron and Steel Requirements.** Section 746 of Title VII of the Consolidated Appropriations Act of 2017 (Division A - Agriculture, Rural Development, Food and Drug Administration, and Related Agencies Appropriations Act, 2017) and subsequent statutes

mandating domestic preference applies the American Iron and Steel (AIS) requirement to obligations made after May 5, 2017:

(1) No Federal funds made available for this fiscal year for the rural water, wastewater, waste disposal, and solid waste management programs authorized by the Consolidated Farm and Rural Development Act (7 U.S.C. 1926 et seq.) shall be used for a project for the construction, alteration, maintenance, or repair of a public water or wastewater system unless all of the iron and steel products used in the project are produced in the United States.
(2) The term "iron and steel products" means the following products made primarily of iron or steel: lined or unlined pipes and fittings, manhole covers and other municipal castings, hydrants, tanks, flanges, pipe clamps and restraints, valves, structural steel, reinforced precast concrete, and construction materials.
(3) The requirement shall not apply in any case or category of cases in which the Secretary of Agriculture (in this section referred to as the "Secretary") or the designee of the Secretary finds that—
   (a) applying the requirement would be inconsistent with the public interest;
   (b) iron and steel products are not produced in the United States in sufficient and reasonably available quantities or of a satisfactory quality; or
   (c) inclusion of iron and steel products produced in the United States will increase the cost of the overall project by more than 25 percent.
(4) Owners are ultimately responsible for compliance with AIS requirements (as defined in RUS Bulletin 1780-35).
   (a) ***Sign*** loan resolutions, grant agreements and letters of intent to meet conditions which include AIS language, accepting AIS requirements in those documents and in the letter of conditions.
   (b) ***Sign*** agreements for engineering services, executed construction contracts and all other appropriate and necessary documents which include AIS language.
   Change Orders and Partial Payment Estimates: ***Acknowledge*** responsibility for compliance with AIS requirements by signing change orders (EJCDC C-941) and partial payment estimates (EJCDC C-620).
   (c) Substantial completion of project: ***Obtain*** the certification letters from the consulting engineer and ***maintain*** this documentation for the life of the loan.
   (d) *Special Cases*
   i. Where Owner provides their own engineering, the Owner's responsibilities will include items listed in Section 5 of RUS Bulletin 1780-35.
   ii. Where Owner performs their own construction, the Owner's responsibilities will include items listed in Section 6 of RUS Bulletin 1780-35.
   iii. Where Owner directly procures AIS products, Owner must ***utilize*** EJCDC Procurement Series standard contract documents following RUS Bulletin 1780-26 Exhibit D and ***obtain*** manufacturers' certifications and provide copies to Engineer and Contractor.

13. Legal Services –A legal services agreement is required with your attorney and bond counsel, if applicable, for any legal work needed in connection with this project. The agreement should stipulate an hourly rate for the work, with a "not to exceed" amount for the services, including reimbursable expenses. RUS Bulletin 1780-7, "Legal Services Agreement," or similar format may be used. The Agency will provide concurrence prior to advertising for bids. Any changes to the fees or services spelled out in the original agreement must be reflected in an amendment to the agreement and have prior Agency concurrence.

14. **<u>Property Rights</u>** - Prior to advertising for bids, you and your legal counsel must furnish satisfactory evidence that you have adequate continuous and valid control over the lands and rights-of-way needed for the project. Acquisitions of necessary land and rights must be accomplished in accordance with the Uniform Relocation Assistance and Real Property Acquisition Policies Act. Such control over the lands and rights will be evidenced by the following:

a. **Right-of-Way Map** – Your engineer will provide a map clearly showing the location of all lands and rights-of-way needed for the project. The map must designate public and private lands and rights and the appropriate legal ownership thereof.
b. **Form RD 442-20, "Right-of-Way Easement"** – This form, or similar format, may be used to obtain any necessary easements for the proposed project.
c. **Form RD 442-21, "Right-of-Way Certificate"** – You will provide a certification on this form that all right-of-way requirements have been obtained for the proposed project.
d. **Form RD 442-22, "Opinion of Counsel Relative to Rights-of-Way"** – Your attorney will provide a certification and legal opinion on this form addressing rights-of-way, easements, and title.
e. Preliminary Title Work (Title Opinion) – When applicable, your attorney or title company will provide a preliminary title opinion for any property related to the facility, currently owned and to be acquired, along with copies of deeds, contracts or options for purchasing said property. Form RD 1927-9, "Preliminary Title Opinion," may be used.
e. Title Work (Title Insurance when a security interest is not taken in the real estate) – When applicable, your attorney or title company will secure an Owners' Title Insurance policy on all real estate to be acquired in connection with this project. This policy should be in an amount equal to the market value of the property as improved.

The approving official may waive title defects or restrictions, such as utility easements, that do not adversely affect the suitability, successful operation, security value, or transferability of the facility. Any such waivers must be provided by the approving official in writing prior to closing or the start of construction, whichever occurs first.

You are responsible for the acquisition of all property rights necessary for the project and for determining that prices paid are reasonable and fair. The Agency may require an appraisal by an independent appraiser or Agency employee in order to validate the price to be paid.

15. **<u>System Policies, Procedures, Contracts, and Agreements</u>** – The facility must be operated on a sound business plan which involves adopting policies, procedures, and/or ordinances outlining the conditions of service and use of the proposed system. Mandatory connection policies should be used where enforceable. The policies, procedures, and/or ordinances must contain an effective collection policy for accounts not paid in full within a specified number of days after the date of billing. They should include appropriate late fees, specified timeframes for disconnection of service, and reconnection fees. A draft of these policies, procedures, and/or ordinances must be submitted for Agency review and concurrence, along with the documents below, before closing instructions may be issued unless otherwise stated.

a. **Conflict of Interest Policy** – Prior to obligation of funds, you must certify in writing that your organization has in place up-to-date written standards of conduct covering conflict of interest. The standards of conduct must include disciplinary actions in the event of a violation by officers,

employees, or agents of the borrower. The standards identified herein apply to any parent, affiliate or subsidiary organization of the borrower that is not a state or local government, or Indian Tribe. Policies and accompanying documents shall be furnished to Rural Development upon request.

You must also submit a disclosure of planned or potential transactions related to the use of Federal funds that may constitute or present the appearance of personal or organizational conflict of interest. Disclosure must be in the form of a written letter signed and dated by the applicant's official. A negative disclosure in the same format is required if no conflicts are anticipated.

Sample conflict of interest policies may be found at the National Council of Nonprofits website, https://www.councilofnonprofits.org/tools-resources/conflict-of-interest, or in Internal Revenue Service Form 1023, Appendix A, "Sample Conflict of Interest Policy," at http://www.irs.gov/pub/irs-pdf/i1023.pdf. Though these examples reference non-profit corporations, the requirement applies to all types of Agency borrowers.

Assistance in developing a conflict of interest policy is available through Agency-contracted technical assistance providers if desired.

b. **Sewer User Agreement** – Projects not involving mandatory connection require users to execute a Water/Sewer Users Agreement. The draft agreement must receive Agency concurrence prior to advertising for bids. RUS Bulletin 1780-9, "Water Users Agreement," or similar format may be used.

c. **Contracts for Other Services/Lease Agreement** – Drafts of any contracts or other forms of agreements for other services, including audit, management, operation, and maintenance, or lease agreements covering real property essential to the successful operation of the facility, must be submitted to the Agency for review and concurrence prior to advertising for bids.

d. **Parity/Intercreditor Agreement** – Projects with parity liens must have in place a written agreement between the parity lenders. The draft agreement must receive Agency concurrence prior to advertising for bids.

Fully executed copies of any policies, procedures, ordinances, contracts, or agreements above must be submitted prior to loan closing, with the exception of the conflict of interest policy, which must be in place prior to obligation of funds.

16. Closing Instructions – The Agency will prepare closing instructions as soon as the requirements of the previous paragraphs are complete, as well as a draft of the security instrument(s). Both your bond and legal counsel must comply with these instructions when closing the Agency loan/grant. will change over each successive year and user rates will need to be adjusted on a regular basis.

17. System Users – This letter of conditions is based upon your indication at application that there will be at least 173 residential users, 73 non-residential users, and no bulk / wholesale users on the existing and/or proposed system when construction is completed.

Before the Agency can agree to the project being advertised for construction bids, you must certify that the number of users indicated at application are currently using the system or signed up to use the system once it is operational.

If the actual number of existing and/or proposed users that have signed up for service is less than the number indicated at the time of application, you must provide the Agency with a written plan on how you will obtain the necessary revenue to adequately cash flow the expected operation, maintenance, debt service, and reserve requirements of the proposed project (e.g., increase user rates, sign up an adequate number of other users, reduce project scope, etc.). Similar action is required if there is cause to modify the anticipated flows or volumes presented following approval.

If you are relying on mandatory connection requirements, you must provide evidence of the authorizing ordinance or statute along with your user certification.

If project does not involve mandatory connections, you must provide the following:

a. **Positive Program to Encourage Connections** – You must provide a positive program to encourage connection by all users as soon as service is available. The program will be reviewed by the Agency prior to advertising for bids. A guide for developing your positive program is available from the Agency.
b. **Sewer User Agreements** – Users will be required to execute a Sewer Users Agreement prior to advertising for construction bids. The amount of cash contributions required will be set by you and concurred with by the Agency. Contributions should be an amount high enough to indicate sincere interest on the part of the potential user, but not so high as to preclude service to low-income families, and must have a deadline for the contribution to be used or forfeited. RUS Bulletin 1780-9, "Water Users Agreement," or similar agreement may be used.
c. **Service Declination Statement** – Each potential user who is located along planned lines and declines the offered service will be provided an opportunity to sign a "Service Declination Statement."

18. Construction Account – A separate construction account, subject to Agency audit, will be established for deposit of all project funds. These funds must be deposited in a bank with Federal Deposit Insurance Corporation (FDIC) insurance coverage. **If the balance in the account containing these funds exceeds the FDIC insurance coverage, the excess amount must be collaterally secured.** A separate account will not be required for Federal funds and other funds; however, the recipient must be able to separately identify, report and account for all Federal funds, including the receipt, obligation and expenditure of funds. Financial institutions or depositaries accepting deposits of public funds and providing other financial agency services to the Federal Government are required to pledge adequate, acceptable securities as collateral, in accordance with 202.6, 31 CFR Part 202. All funds in the account will be secured by a collateral pledge equaling at least 100 percent of the highest amount of funds expected to be deposited in the construction account at any one time.

19. Interim Financing – The Agency's policy is to utilize interim financing for all loans exceeding $500,000. Prepayment penalties on interim financing are not allowed. Borrowers are required to seek interim financing initially from private or cooperative lenders if funds can be borrowed at reasonable interest rates on an interim basis from those sources for the construction period. The fact that a commercial lender's rates are higher than current Agency interest rates does not necessarily mean that the commercial rate is not reasonable.

20. Proposed Operating Budget – You must establish and/or maintain a rate schedule that provides adequate income to meet the minimum requirements for operation and maintenance (O and M), debt service, and reserves. Prior to advertising for bids, you must submit a proposed annual operating budget to the Agency, as well as your proposed rate schedule. The operating budget should be based on a typical

year cash flow after completion of the construction phase and should be signed by the appropriate official of your organization. Form RD 442-7, "Operating Budget," or similar format may be utilized for this purpose. It is expected that O and M expenses will change over each successive year and user rates will need to be adjusted on a regular basis.

Technical assistance is available at no cost to help you evaluate and complete a rate analysis on your system. This assistance is available free to your organization. If you are interested, please contact our office for information.

21. Permits –The owner or responsible party will be required to obtain all applicable permits for the project, prior to advertising for bids. The consulting engineer must submit written evidence that all applicable permits required prior to construction have been obtained with submission to the Agency of the final plans, specifications, and bid documents.

22. Risk and Resilience Assessment/Emergency Response Plan (RRA/ERP) – The Agency requires all financed water and wastewater systems to have a RRA/ERP in place. New water or wastewater systems must provide a certification that an ERP is complete prior to the start of operation, and a certification that an RRA is complete must be submitted within one year of the start of operation. Borrowers with existing systems must provide a certification that an RRA/ERP has been completed prior to advertising for bids. Technical assistance is available in preparing these documents at no cost to you.

The RRA/ERP documents themselves are not submitted to the Agency. The RRA/ERP must address potential impacts from natural disasters and other emergency events. It should include plans to address impacts of flash flooding in areas where severe drought or wildfires occur. The documents should be reviewed and updated every five years at a minimum.

23. Bid Authorization - Once all the conditions outlined in Section III of this letter have been met, the Agency will authorize you to advertise the project for construction bids. Such advertisement must be in accordance with applicable State statutes.

SECTION IV - REQUIREMENTS PRIOR TO START OF CONSTRUCTION

24. Disbursement of Agency Funds - Agency funds will be disbursed electronically into the construction account as they are needed. SF 3881, "ACH Vendor/Miscellaneous Payment Enrollment Form," must be completed and submitted to the Agency prior to commencement of construction.

The order of disbursement is as follows: 1) Applicant contribution, 2) other funding sources, 3) interim financing or Agency loan funds, and 4) Agency grant funds. Interim financing or Agency loan funds will be expended after all other funding sources unless a written agreement is reached with all other funding sources on how funds are to be disbursed prior the first disbursement. Interim financing funds or Agency loan funds must be used prior to the use of Agency grant funds. Agency Grant funds must not be disbursed prior to loan funds except as authorized in 7 CFR 1780.45(d).

Grant funds are to be deposited in an interest-bearing account (exception provided below) in accordance with 2 CFR Part 200 and interest in excess of $500 per year remitted to the Agency. The funds should be disbursed by the recipient immediately upon receipt, and there should be little interest accrual on the Federal funds. Recipients shall maintain advances of Federal funds in interest-bearing accounts, unless:

- The recipient receives less than $120,000 in Federal awards per year.
- The best reasonably available interest-bearing account would not be expected to earn interest in excess of $500 per year on Federal cash balances.
- The depository would require an average or minimum balance so high that it would not be feasible within the expected Federal and non-Federal cash resources.
- A foreign government or banking system prohibits or precludes interest-bearing accounts.

25. Bid Tabulation – Immediately after bid opening, you must provide the Agency with the bid tabulation and your engineer's evaluation of bids and recommendations for contract awards. If the Agency agrees that the construction bids received are acceptable, adequate funds are available to cover the total project costs, and all the requirements of Section III of this letter have been satisfied, the Agency will authorize you to issue the Notice of Award.

a. **Cost Overruns –** If bids are higher than expected, or if unexpected construction problems are encountered, you must utilize all options to reduce cost overruns. Negotiations, redesign, use of bidding alternatives, rebidding or other means will be considered prior to commitment of subsequent funding by the Agency. Any requests for subsequent funding to cover cost overruns will be contingent on the availability of funds. Cost overruns exceeding 20 percent of the development cost at time of loan or grant approval or where the scope of the original purpose has changed will compete for funds with all other applications on hand as of that date.
b. **Excess Funds** - If bids are lower than anticipated at time of obligation, excess funds must be deobligated prior to start of construction except in the cases addressed in this paragraph. In cases where the original PER for the project included items that were not bid, or were bid as an alternate, the State Office official may modify the project to fully utilize obligated funds for those items. Amendments to the PER, ER, and Letter of Conditions may be needed for any work not included in the original project scope. In all cases, prior to start of construction, excess funds will be deobligated, with grant funds being deobligated first. Excess funds do not include contingency funds as described in this letter.

26. Suspension and Debarment Screening – In accordance with 2 CFR Part 180, Subpart C, as a condition of the transaction and the responsibilities to persons at the next lower tier with whom you enter into transactions, you must conduct screening for suspension and debarment of lower tier recipients (e.g., vendors, contractors, etc.).

27. Contract Review – Your attorney will certify that the executed contract documents, including performance and payment bonds, if required, are adequate and that the persons executing these documents have been properly authorized to do so in accordance with 7 CFR 1780.61(b).

Once your attorney has certified that they are acceptable, the contract documents will be submitted to the Agency for concurrence. Construction cannot commence until the Agency has concurred in the construction contracts.

28. Final Rights of Way – Your attorney or title company must furnish a separate final title opinion or Title Insurance Policy on all real property related to the facility, now owned and to be acquired for this project, as of the day of loan closing or start of construction, whichever occurs first. Form RD 1927-10, "Final Title Opinion" may be used.

If any of the right-of-way forms listed previously in this letter contain exceptions that do not adversely affect the suitability, successful operation, security value, or transferability of the facility, the approving official must provide a written waiver prior to the issuance of the Notice to Proceed.

29. Insurance and Bonding Requirements - Prior to the start of construction or loan closing, whichever occurs first, you must acquire and submit to the Agency proof of the types of insurance and bond coverage for the borrower shown below. The use of deductibles may be allowed, providing you have the financial resources to cover potential claims requiring payment of the deductible. The Agency strongly recommends that you have your engineer, attorney, and insurance provider(s) review proposed types and amounts of coverage, including any exclusions and deductible provisions. It is your responsibility and not that of the Agency to assure that adequate insurance and fidelity bond coverage is maintained.

a. **General Liability Insurance** – Include vehicular coverage.
b. **Workers' Compensation** – In accordance with appropriate State laws.
c. **Guaranty or Fidelity Insurance**–Coverage for all persons who have access to funds, including persons working under a contract or management agreement. Coverage may be provided either for all individual positions or persons, or through "blanket" coverage providing protection for all appropriate employees. Each position is to be insured in an amount equal to the maximum amount of funds expected to be under the control of that position at any one time. The minimum coverage allowed will be an amount equal to the total annual debt service payment on the Agency loans. The coverage may be increased during construction based on the anticipated monthly advances.
d. **National Flood Insurance** - If the project involves acquisition or construction in a designated special flood area, the community in which the acquisition or construction is situated must be currently participating in the national flood insurance program. Additionally, if the project involves acquisition or constriction in designated special flood or mudslide prone areas, a flood insurance policy must be in place at the time of loan closing.
e. **Real Property Insurance** – Fire and extended coverage will normally be maintained on all structures except reservoirs, pipelines and other structures if such structures are not normally insured, and subsurface lift stations except for the value of electrical and pumping equipment. The Agency will be listed as mortgagee on the policy when the Agency has a lien on the property. Prior to the acceptance of the facility from the contractor(s), you must obtain real property insurance (fire and extended coverage) on all facilities identified above.

The Agency is to be listed as "Other Insured" so as to receive notifications on all insurance, regardless of security. Insurance types described above are required to be continued throughout the life of the loan. See Section VII.

30. Initial Civil Rights Compliance Review – The Agency will conduct an initial civil rights compliance review of the borrower prior to loan closing or start of construction, whichever occurs first, in accordance with 7 CFR 1901, Subpart E. You are expected to comply with the completion of the review, including the furnishing of any documents, records, or other applicable material.

SECTION V – REQUIREMENTS PRIOR TO CLOSING

31. Interim Financing. Interim financing is being used. Generally, loan closing will occur near the end of construction when interim funds are fully disbursed. Documents detailed above from Sections II and III regarding security, electronic payments (Form 3550-28), and system policies, procedures, contracts, and agreements must be adopted and/or executed and submitted to the Agency prior to loan closing.

32. Electronic Payments – Payments will be made through an electronic preauthorized debit system. You will be required to complete Form RD 3550-28, "Authorization Agreement for Preauthorized Payments," for all new and existing indebtedness to the Agency prior to loan closing.

33. Other Requirements – All requirements contained in the Agency's closing instructions, as well as any requirements of your bond counsel and/or attorney, must be met prior to loan closing.

a. System for Award Management. You will be required to maintain a Dun and Bradstreet Data Universal Numbering System (DUNS) number and maintain an active registration in the System for Award Management (SAM) database. Renewal can be completed online at: http://sam.gov. This registration must be renewed and revalidated every 12 months for as long as there is an active loan, grant, or guaranteed loan with the Agency.

To ensure the information is current, accurate and complete, and to prevent the SAM account expiration, the review and updates must be performed within 365 days of the activation date, commonly referred to as the expiration date. The registration process may take up to 10 business days. (See 2 CFR Part 25 and the "Help" section at http://sam.gov).

b. Litigation. You are required to notify the Agency within 30 days of receiving notification of being involved in any type of litigation prior to loan closing or start of construction, whichever occurs first. Additional documentation regarding the situation and litigation may be requested by the Agency.

c. Certified Operator. Evidence must be provided that your system has or will have a certified operator, as defined by applicable State or Federal requirements, available prior to the system becoming operational, or that a suitable supervisory agreement with a certified operator is in effect.

SECTION VI – REQUIREMENTS DURING CONSTRUCTION AND POST CONSTRUCTION

34. Construction Completion Timeframe – Following the benchmarks established in Section I, Item 4, Project Timeline, all projects should be completed and Agency funds fully disbursed within three years of the date of obligation. If funds are not disbursed within three years of obligation and you have not already done so per Section I, Item 4, you must submit a written request for extension of time to the Agency with adequate justification of the circumstances, including any beyond your control. The request must be submitted at least 90 days prior to the end of the three-year timeframe and include a revised estimated date of completion. The Agency will typically only allow one extension. Subsequent requests for waivers beyond the initial extension or requests that exceed five years from the initial date of obligation will be submitted to the RUS, Water and Environmental Programs for consideration. The Agency retains the right to de-obligate any loan and/or grant monies, or take other appropriate action, related to unliquidated funds that exceed the timeframes above and are not under an active extension.

35. Resident Inspector(s) – Full-time inspection is required unless you request an exception. Such requests must be made in writing and the Agency must provide written concurrence. Inspection services are to be provided by the consulting engineer unless other arrangements are requested in writing and concurred with by the Agency. A resume of qualifications of any resident inspector(s) will be submitted

to the owner and Agency for review and concurrence prior to the pre-construction conference. The resident inspector(s) must attend the preconstruction conference.

36. Preconstruction Conference – A preconstruction conference will be held prior to the issuance of the Notice to Proceed. The consulting engineer will review the planned development with the Agency, owner, resident inspector, attorney, contractor, other funders, and other interested parties, and will provide minutes of this meeting to the owner and Agency.

37. Inspections - The Agency requires a preconstruction conference, pre-final, final, and warranty inspections. Your engineer will schedule a warranty inspection with the contractor and the Agency before the end of the [one-year] warranty period to address and/or resolve any outstanding warranty issues. The Agency will conduct an inspection with you of your records management system at the same time and will continue to inspect the facility and your records system every three years for the life of the loan. See Section VII of this letter.

38. Change Orders – A Change Order must be submitted for all modifications to the approved scope of work, including existing contracts. This includes non-physical modifications such as any time extension requests. Prior written Agency concurrence is required for all Change Orders.

39. Payments – Prior Agency concurrence is required for all invoices and requests for payment before Agency funds will be released. Requests for payment related to a contract or service agreement will be signed by the owner, project engineer, and contractor or service provider prior to Agency concurrence. Invoices not related to a construction contract or service agreement will include the owner's written concurrence.

40. Use of Remaining Funds – As stated above, applicant contribution and connection or tap fees will be the first funds expended in the project. Funds remaining after all costs incident to the basic project have been paid or provided will be handled as follows:

a. Funds remaining after the applicant contribution and connection fees may be considered in direct proportion to the amounts of funding obtained from each source. The use of Agency funding will be limited to eligible loan and grant purposes, provided the use will not result in major changes to the original scope of work and the purpose of the loan and grant remains the same.
b. Any reductions in the Agency funding will be first applied to the grant funds.
c. Grant funds not expended for authorized purposes will be cancelled (de-obligated) within 90 days of final completion of project. Prior to actual cancellation, you, your attorney and engineer will be notified of the Agency's intent to cancel the remaining funds and given appropriate appeal rights.
d. Under no circumstances is it appropriate to use remaining funds as contributions to a new project outside the scope of the funded project.
e. Loan funds that are not needed will be cancelled (de-obligated) prior to loan closing.

41. Technical, Managerial and Financial Capacity - It is required that members of the Board of Directors, City Council members, trustees, commissioners and other governing members possess the necessary technical, managerial, and financial capacity skills to consistently comply with pertinent Federal and State laws and requirements. It is recommended members receive training within one year of appointment or election to the governing board, and a refresher training for all governing members on a routine basis. The content and amount of training should be tailored to the needs of the individual and the

utility system. Technical assistance providers are available to provide this training for your organization, often at no cost. Contact the Agency for additional information.

42. Reporting Requirements Related to Expenditure of Funds -- An annual audit under 2 CFR 200 is required if you expend $750,000 or more in Federal financial assistance per fiscal year. The total Federal funds expended from all sources shall be used to determine Federal financial assistance expended. Expenditures of interim financing are considered Federal expenditures.

All audits are to be performed in accordance with 2 CFR Part 200, as adopted by USDA through 2 CFR Part 400. Further guidance on preparing an acceptable audit can be obtained from the Agency. The audit must be prepared by an independent licensed Certified Public Accountant, or a State or Federal auditor if allowed by State law and must be submitted within 9 months of your fiscal year end. Both the audit and accompanying management report must be submitted for review.

If an audit is required, you must enter into a written agreement with the auditor and submit a copy of that agreement to the Agency prior to the advertisement of construction bids. The audit agreement may include terms and conditions that the borrower and auditor deem appropriate; however, the agreement should include the type of audit to be completed, the time frame in which the audit will be completed, and how irregularities will be reported.

SECTION VII – SERVICING REQUIREMENTS DURING THE TERM OF THE LOAN

43. Prepayment and Extra Payments - Prepayments of scheduled installments, or any portion thereof, may be made at any time at the option of borrower, with no penalty.

Security instruments, including bonding documents, must contain the following language regarding extra payments, unless prohibited by State statute:

> *Prepayments of scheduled installments, or any portion thereof, may be made at any time at the option of borrower. Refunds, extra payments and loan proceeds obtained from outside sources for the purpose of paying down the Agency debt, shall, after payment of interest, be applied to the installments last to become due under this note and shall not affect the obligation of borrower to pay the remaining installments as scheduled in your security instruments.*

44. Annual Financial Reporting/Audit Requirements – You are required to submit an annual financial report at the end of each fiscal year. The annual report will be certified by the appropriate organization official, and will consist of financial information, a current rate schedule, and listing of board members with their terms. Financial statements must be prepared on an accrual basis of accounting in accordance with generally accepted accounting principles (GAAP). The annual report will include separate reporting for each water and waste disposal facility, and itemized cash accounts by type (debt service, short-lived assets, etc.) under each facility. All records, books and supporting material are to be retained for three years after the issuance of the annual report. Technical assistance is available, at no cost, with preparing financial reports.

The type of financial information that must be submitted is specified below:

a. **Audits** – An audit under the Single Audit Act is required if you expend $750,000 or more in Federal financial assistance per fiscal year. The total Federal funds expended from all sources

shall be used to determine Federal financial assistance expended. Expenditures of interim financing are considered Federal expenditures.

See Section VI for additional information regarding audits.

b. **Financial Statements** – If you expend less than $750,000 in Federal financial assistance per fiscal year, you may submit financial statements in lieu of an audit which include, at a minimum, a balance sheet and an income and expense statement. You may use Form RD 442-2, "Statement of Budget, Income and Equity," and 442-3, "Balance Sheet," or similar format to provide the financial information. The financial statements must be signed by the appropriate borrower official and submitted within 60 days of your fiscal year end.

c. **(if applicable) Quarterly Reports** – Quarterly Income and Expense Statements will be required until the processing office waives this requirement. You may use Form RD 442-2, "Statement of Budget, Income and Equity," or similar format to provide this information. The reports are to be signed by the appropriate borrower official and submitted within 30 days of each quarter's end. The Agency will notify you in writing when quarterly reports are no longer required.

45. Annual Budget and Projected Cash Flow - Thirty days prior to the beginning of each fiscal year, you will be required to submit an annual budget and projected cash flow to this office. The budget must be signed by the appropriate borrower official. Form RD 442-2, "Statement of Budget, Income and Equity," or similar format may be used.

Technical assistance is available at no cost to help you evaluate and complete a rate analysis on your system, as well as completing the annual budget.

46. Graduation - By accepting this loan, you are also agreeing to refinance (graduate) the unpaid loan balance in whole, or in part, upon request of the Government. If at any time the Agency determines you can obtain a loan for such purposes from responsible cooperative or private sources at reasonable rates and terms, you will be requested to refinance. Your ability to refinance will be assessed every other year for those loans that are five years old or older.

47. Security/Operational Inspections – The Agency will inspect the facility and conduct a review of your operations and records management system and conflict of interest policy every three years for the life of the loan. You must participate in these inspections and provide the required information.

48. System for Award Management. You will be required to maintain a Dun and Bradstreet Data Universal Numbering System (DUNS) number and maintain an active registration in the System for Award Management (SAM) database. Further information can be found at paragraph 34 of this letter.

49. Risk and Resiliency Assessment/Emergency Response Plan (RRA/ERP) – The RRA/ERP is further outlined under Section III of this letter. You will be required to submit a certification to the servicing office every five years that the RRA/ERP is current and covers all sites related to the facility. The RRA/ERP documents themselves are not submitted to the Agency. The RRA/ERP must address potential impacts from natural disasters and other emergency events. It should include plans to address impacts of flash flooding in areas where severe drought or wildfires occur. Technical assistance is available in preparing these documents at no cost to you.

50. Insurance. – Insurance requirements are further outlined in Section IV of this letter. You will be required to maintain insurance on the facility and employees as previously described in this letter for the life of the loan.

51. Statutory and National Policy Requirements – As a recipient of Federal funding, you are required to comply with U.S. statutory and public policy requirements, including but not limited to:

a. **Section 504 of the Rehabilitation Act of 1973** – Under Section 504 of the Rehabilitation Act of 1973, as amended (29 U.S.C. 794), no handicapped individual in the United States shall, solely by reason of their handicap, be excluded from participation in, be denied the benefits of, or be subjected to discrimination under any program or activity receiving Agency financial assistance.

b. **Civil Rights Act of 1964** – All borrowers are subject to, and facilities must be operated in accordance with, Title VI of the Civil Rights Act of 1964 (42 U.S.C. 2000d et seq.) and 7 CFR 1901, Subpart E, particularly as it relates to conducting and reporting of compliance reviews. Instruments of conveyance for loans and/or grants subject to the Act must contain the covenant required by Paragraph 1901.202(e) of this Title.

c. **The Americans with Disabilities Act (ADA) of 1990** – This Act (42 U.S.C. 12101 et seq.) prohibits discrimination on the basis of disability in employment, State and local government services, public transportation, public accommodations, facilities, and telecommunications.

d. **Age Discrimination Act of 1975** – This Act (42 U.S.C. 6101 et seq.) provides that no person in the United States shall on the basis of age, be excluded from participation in, be denied the benefits of, or be subjected to discrimination under any program or activity receiving Federal financial assistance.

e. **Limited English Proficiency (LEP) under Executive Order 13166** - LEP statutes and authorities prohibit exclusion from participation in, denial of benefits of, and discrimination under Federally-assisted and/or conducted programs on the ground of race, color, or national origin. Title VI of the Civil Rights Act of 1964 covers program access for LEP persons. LEP persons are individuals who do not speak English as their primary language and who have a limited ability to read, speak, write, or understand English. These individuals may be entitled to language assistance, free of charge. You must take reasonable steps to ensure that LEP persons receive the language assistance necessary to have meaningful access to USDA programs, services, and information your organization provides. These protections are pursuant to Executive Order 13166 entitled, “Improving Access to Services by Persons with Limited English Proficiency” and further affirmed in the USDA Departmental Regulation 4330-005, “Prohibition Against National Origin Discrimination Affecting Persons with Limited English Proficiency in Programs and Activities Conducted by USDA.”

f. **Controlled Substances Act** - Even though state law may allow some activities, as a recipient of Federal funding, you are subject to the Controlled Substances Act. Specific questions about the Controlled Substances Act should be directed to the Servicing Official who will contact the Office of General Counsel, as appropriate.

52. <u>Compliance Reviews and Data Collection</u> – Agency financial programs must be extended without regard to race, color, religion, sex, national origin, marital status, age, or physical or mental handicap. You must display posters (provided by the Agency) informing users of these requirements, and the Agency will monitor your compliance with these requirements during regular compliance reviews.

The Agency will conduct regular compliance reviews of the borrower and its operation in accordance with 7 CFR Part 1901, Subpart E, and 36 CFR 1191, Americans with Disabilities Act (ADA) Accessibility Guidelines for Buildings and Facilities; Architectural Barriers Act (ABA) Accessibility Guidelines. Compliance reviews will typically be conducted in conjunction with the security inspections described in this letter.

If beneficiaries (users) are required to complete an application or screening for the use of the facility or service that you provide, you must request and collect data by race (American Indian or Alaska Native, Asian, Black or African American, White); ethnicity (Hispanic or Latino, Not Hispanic or Latino); and by sex. The Agency will utilize this data as part of the required compliance review.

<u>SECTION VIII – REMEDIES FOR NON-COMPLIANCE</u>

Non-compliance with the conditions in this letter or requirements of your security documents will be addressed under the provisions of Agency regulations, statutes, and other applicable policies.

We look forward to working with you to complete this project. If you have any questions, please contact Michael Dean at 928-910-4471 or by e-mail at Michael.dean2@usda.gov.

Sincerely,

JEFFREY A. HAYS
Community Programs Director

Attachments

cc: Community Programs Director
Accountant
Attorney
Bond Counsel
Engineer

FORMS and BULLETINS:

Form AD-3031 “Assurance Regarding Felony Convictions or Tax Delinquent Status for Corporate Applicants” – Item 30
Internal Revenue Service Form 1023, Appendix A, “Sample Conflict of Interest Policy” - Item 15
Form RD 440-22, “Promissory Note” – Item 6
Form RD 442-2, “Statement of Budget, Income and Equity” – Items 45 and 46
Form RD 442-3, “Balance Sheet” – Item 45
Form RD 442-7, “Operating Budget” – Item 20
Form RD 442-20, “Right-of-Way Easement” – Item 14
Form RD 442-21, “Right-of-Way Certificate” – Item 14
Form RD 442-22, “Opinion of Counsel Relative to Rights-of-Way” – Item 14
Form RD 1927-9, “Preliminary Title Opinion” – Item 14
Form RD 1927-10, “Final Title Opinion” – Item 28
Form RD 1940-1, “Request for Obligation of Funds” – Pages 1 and 2
Form RD 1942-8, “Resolution of Members or Stockholders” – Item 6
Form RD 1942-46, “Letter of Intent to Meet Conditions” – Page 2
Form RD 3550-28, “Authorization Agreement for Preauthorized Payments” – Items 32 and 33
Form UCC-1, “Financing Statement” – Item 6
Form UCC-1Ad, “UCC Financing Statement Addendum” – Item 6
SF 3881, “ACH Vendor/Miscellaneous Payment Enrollment Form” – Item 24
RUS Bulletin 1780-7, “Legal Services Agreement” – Item 13
RUS Bulletin 1780-9, “Water Users Agreement” - Items 15 and 17
RUS Bulletin 1780-12, “Water and Waste System Grant Agreement” – Item 6
RUS Bulletin 1780-26, “Guidance for the Use of EJCDC Documents on Water and Waste Projects with RUS Financial Assistance” – Items 11 and 12
RUS Bulletin 1780-27, “Loan Resolution (Public Bodies)” – Item 6
RUS Bulletin 1780-28, “Loan Resolution Security Agreement” – Item 6

Appendix A

A. Reporting Total Compensation of Recipient Executives

In the rare instance in which all of the following apply, please contact your POB Specialist for language to include in the LOC:

1. The total Federal funding authorized to date under this award is $30,000 or more;

2. In the preceding fiscal year, the applicant received—

   (A) 80 percent or more of their annual gross revenues from Federal procurement contracts (and subcontracts) and Federal financial assistance subject to the Transparency Act, as defined at 2 CFR 170.320 (and subawards); and

   (B) $25,000,000 or more in annual gross revenues from Federal procurement contracts (and subcontracts) and Federal financial assistance subject to the Transparency Act, as defined at 2 CFR 170.320 (and subawards); and

3. The public does not have access to information about the compensation of the executives through periodic reports filed under section 13(a) or 15(d) of the Securities Exchange Act of 1934 (15 U.S.C. 78m(a), 78o(d)) or section 6104 of the Internal Revenue Code of 1986. (To determine if the public has access to the compensation information, see the U.S. Security and Exchange Commission total compensation filings at http://www.sec.gov/answers/execomp.htm.)

B. Subaward and Subrecipients

In the rare instance in which there is a subrecipient in the project, please contact your POB Specialist for language to include in the LOC:

Subrecipient means an entity that:

i. Receives a subaward from the recipient under this award; and

ii. Is accountable to the recipient for the use of the Federal funds provided by the subaward.

a. Subaward means an award provided by a pass-through entity to a subrecipient for the subrecipient to carry out part of a Federal award received by the pass-through entity. It does not include payments to a contractor or payments to an individual that is a beneficiary of a Federal program.

EXHIBIT

±2.50 ACRES

LOCATED IN SECTION 23, T.16N., R.2E., GILA & SALT RIVER MERIDIAN, YAVAPAI COUNTY, ARIZONA

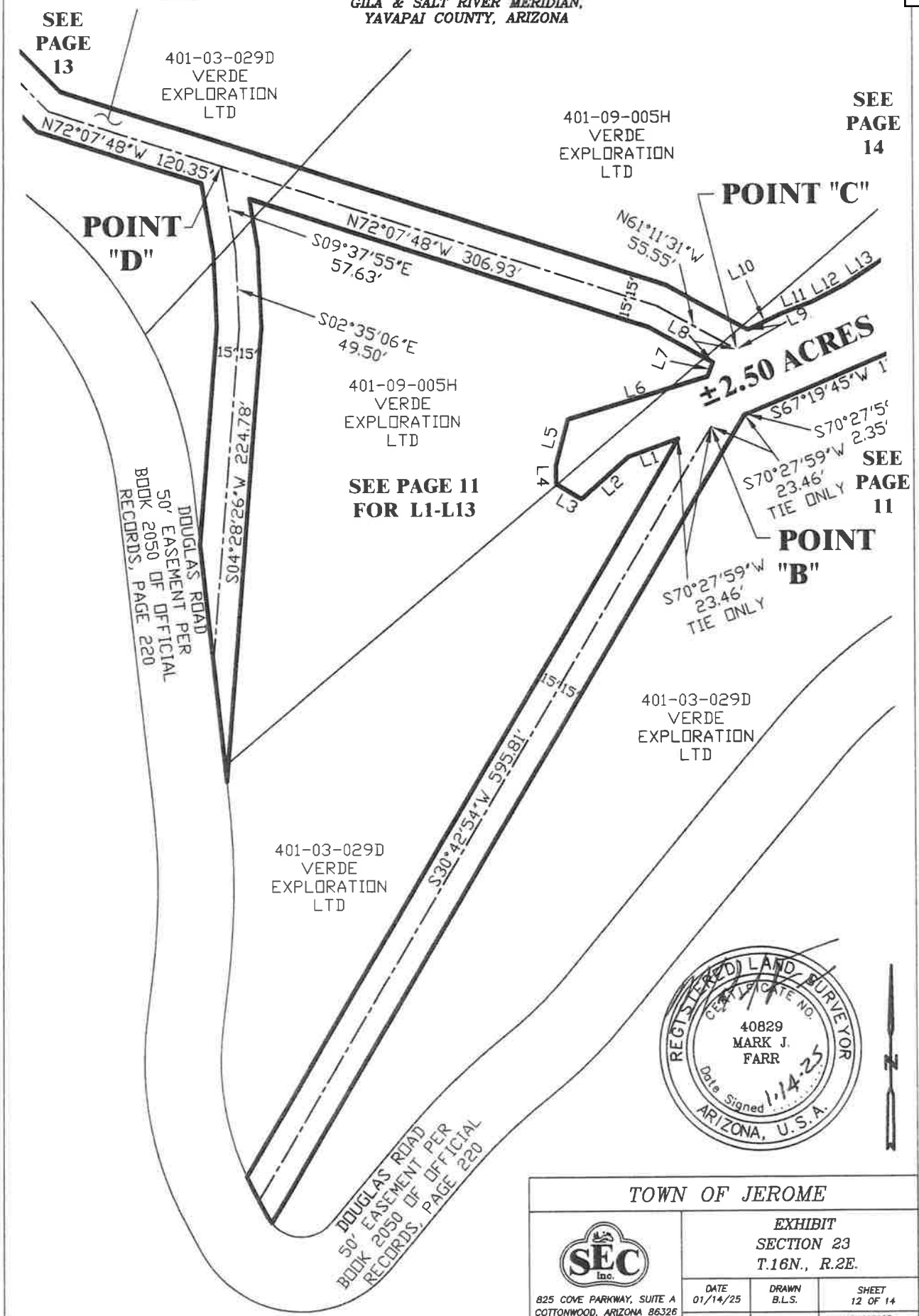

TOWN OF JEROME		
SEC Inc. 825 COVE PARKWAY, SUITE A COTTONWOOD, ARIZONA 86326 (928) 634-5889 www.sec-landmgt.com	EXHIBIT SECTION 23 T.16N., R.2E.	
	DATE 01/14/25	DRAWN B.L.S.
	SCALE NONE	CHECKED M.J.F.
	SHEET 12 OF 14	19-1101CE Town Jerome "Exhibit.dwg"

PACE
Advanced Water Engineering

Jerome Wastewater Treatment Plant Improvements

ADDENDUM #4

Date: May 27, 2026

Quest CDN #9117808

This addendum is to formally issue responses to bidder questions and minor modifications.
Reminder: Acknowledge receipt of this addendum on the Bid Form.

The bid date is being extended to **Wednesday, June 3rd at 2:30pm.**

Attachments:

1. None.

Clarifications

Re: Generator

1. The AIC rating for the automatic transfer switch shall be 42kAIC min.
2. The SPD for the generator and ATS shall be 200kA, in accordance with specification section 26 4313 – 2.02.

Questions

1. The plan has two pages of standard steel stud details; however, we can only identify the bathroom wall as the lone steel stud framed item in the plan set. Are there other areas where steel stud framing is intended?

   Response: *The bathroom wall and center dividing wall between the blower room and admin room are to be steel stud framed walls.*

2. Sunshade – It appears the roof of the sunshade is B deck over steel beams. We assume there is a roofing system intended for this structure, please provide details on how this roof is to be finished.

   Response: *The sunshade is 1.5" x 20 GA steel (B deck) over steel beams. No additional roofing system is required.*

3. Roof over blower room and admin room. S2.01 framing plan indicates this roof structure is a flat roof per detail 202 and 204 on S4.1. M7.0 shows some standing seam roof in the detail, the extent of which is unclear, along with the East elevation on sheet A4.0 may show standing seam roofing on the fascia. Please provide a roof plan with details on the intended roof structure and finishes and details of overhand framing if required as indicated on sheet A1.0.

   Response: *To achieve the overhang to the east side of the blower/admin building the structural roofing plan will be modified to show the deck on top of the wall and rotate the framing 90 degrees and extend over the CMU wall. The roofing system shall be provided above the structural deck and consists of a minimum R-38 roof panel insulation, per*

Yavapai County, and a standing seam metal roof system. Fascia, trim, attachments, and roofing support components shall be provided in accordance with the roofing manufacturer's recommendations and best practices. The roof shall have a minimum slope of 0.25:12 away from the SBR basins. Structural markups to be provided in subsequent addenda.

4. There are stoops drawn on the plan set outside of the double doors at the blower room and man door at the admin area. We do not find that they are called out anywhere to be included in the work. Are these part of the base bid or future amenities?

   Response: *The stoops are to be included in the work. Stoops and housekeeping pads shall be constructed per the 12" Concrete Equipment Pad Detail located on Sheet S1.3. Final dimensions shall be determined after equipment and building layout and sizing has been finalized.*

5. Electrical – P130 on sheet E3.1 is not on the conduit and wire schedule, please provide information for this run.

   Response: *P130 is a spare conduit. The conduit labeled P130 on the electrical site plan should be P132.*

6. We would like to ask for an extension on the bid due date.

   Response: *The bid due date has been extended to Wednesday, June 3rd at 2:30pm. The location will remain the same.*

7. Is the center wall in the blower/admin masonry?

   Response: *The center wall shall be metal studded wall, see typical steel stud wall per structural sheets.*

8. What type of framing is required for the bathroom walls?

   Response: *The bathroom walls shall be metal studded walls, see typical steel stud wall per structural sheets.*

9. What roof system is required? Sheet M7.0 states standing seam metal sloped roof but what support system?

   Response: *See response to question 3.*

10. Is the roof insulated? If so, what is required?

    Response: *Minimum R-38 roof panel insulation shall be supplied as required by Yavapai County.*

PACE
Advanced Water Engineering

Jerome Wastewater Treatment Plant Improvements

ADDENDUM #5

Date: May 28, 2026

Quest CDN #9117808

This addendum is to formally issue responses to bidder questions and minor modifications.
Reminder: Acknowledge receipt of this addendum on the Bid Form.

The bid date is being extended to **Wednesday, June 3rd at 2:30pm.**

Attachments:

1. Attachment 1 – Framing Plan Revisions

Clarifications

Re: Roofing and Framing Details

1. Please see Attachment 1 for additional clarification on the proposed roofing system.

8723 E. Via de Commercio, #A-204 | Scottsdale, AZ 85258
P: (480) 991-3595 F: (480) 751-1810 | www.pacewater.com

PK ASSOCIATES, LLC
6900 E. Belleview Ave. #200
Greenwood Village, Colorado 80111
Phone: (720) 799-1058
Email: cadd@pkastructural.com
Website: www.pkastructural.com

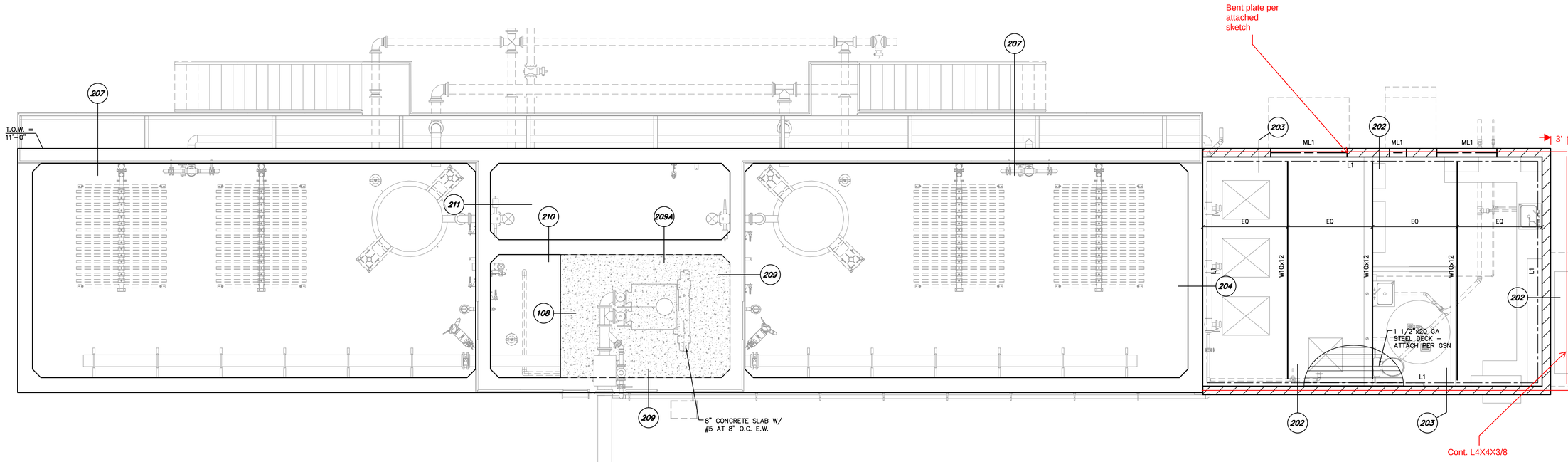

1 FRAMING PLAN

SCALE: 1/4"=1'-0"

LEDGER (L) SCHEDULE		
STEEL: 1. ALL LEDGERS SHALL HAVE MINIMUM OF 2 WELD PLATES OR ANCHOR BOLTS AS NOTED BELOW. 2. WELD PLATES OR ANCHOR BOLTS SHALL BE LOCATED NOT LESS THAN 6" NOR MORE THAN 1'-4" FROM END OF LEDGER OR LEDGER SPLICE.		
MARK	SIZE / TYPE	CONNECTION
L1	L4x4x1/4"	EMBED PER DETAIL 202 AND 204 AT 48" O.C.

MASONRY LINTEL (ML) SCHEDULE

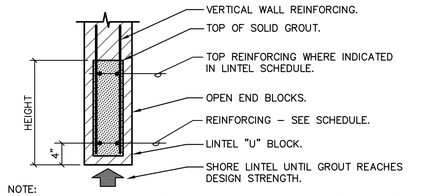

NOTE:
1. VERTICAL REINFORCING TO MATCH AND LAP WALL REINFORCING PER G.S.N.
2. EXTEND GROUT, OPEN END MASONRY UNITS AND REINFORCING 2'-0" PAST EACH JAMB. USE CORNER BARS WHERE 2'-0" CANNOT BE ACHIEVED.

MARK	HEIGHT	REINFORCING	REMARKS
ML1	16"	2- #5 BOTTOM	---

NO	BY	DATE	REVISIONS	DATE	APP.

Registered Professional Engineer (AZ/CO) CERTIFICATE NO. 70374 JAMES APPLEYARD Date Signed 10/31/25 ARIZONA, U.S.A.

PREPARED BY: PKA
DESIGNED BY: JA
DRAWN BY: NS
CHECKED BY: JA
SCALE: AS NOTED
DATE: SEP 2025
JOB NO.: 23364

TITLE: FRAMING PLAN

THESE DRAWINGS ARE THE PROPERTY OF P.A.C.E. AND SHALL NOT BE REPRODUCED IN ANY MANNER NOR BE USED FOR CONSTRUCTION UNLESS STAMPED "ISSUED FOR CONSTRUCTION".

ISSUED FOR BID

JOB: TOWN OF JEROME WASTEWATER TREATMENT PLANT — YAVAPAI AZ

PREPARED BY: PACE Advanced Water Engineering
8723 E. VIA de VENTURA, SUITE A, SCOTTSDALE, CA 85258
P: (480) 991-3595 | www.paceadvisor.com
TAYLOR B. PIERCE R.C.E 70097 DATE

SHEET S2.01

60 OF 99 SHEETS

JOB NO. 23364

PK ASSOCIATES
CONSULTING STRUCTURAL ENGINEERS

Job Name Jerome

Item I.

Job No. _____ Sheet No. _____

By J.A. Date 5/28/26

1. Steel deck
2. Cont. 1/4" bent steel plate
3. 1/2" X 6" X 6" steel plate w/ (2) 3/4" ø H.S. @ 4" O.C.
4. ± 1" dry pack
5. Cont. #5 in 8" deep grouted bond beam
6. Masonry Wall

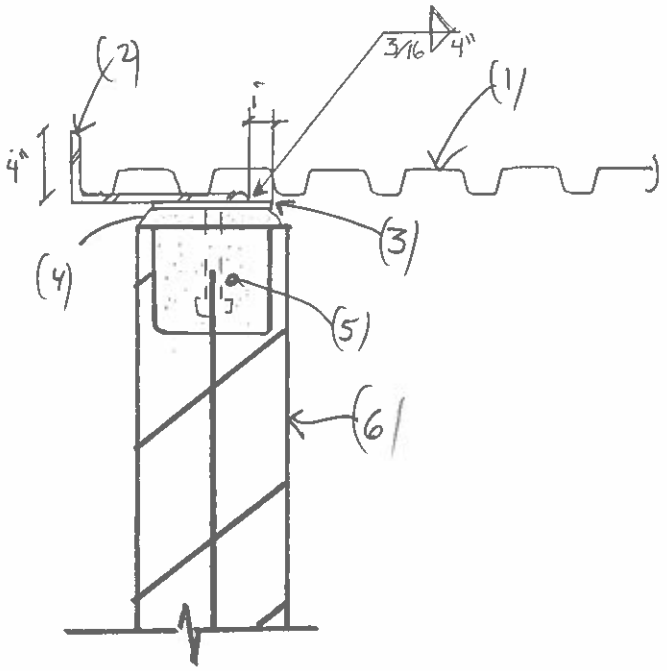

Steel Deck @ Masonry Wall

PK ASSOCIATES, LLC
6900 E. Belleview Ave. #200
Greenwood Village, Colorado 80111
Phone: (720) 799-1058
Email: cadd@pkastructural.com
Website: www.pkastructural.com

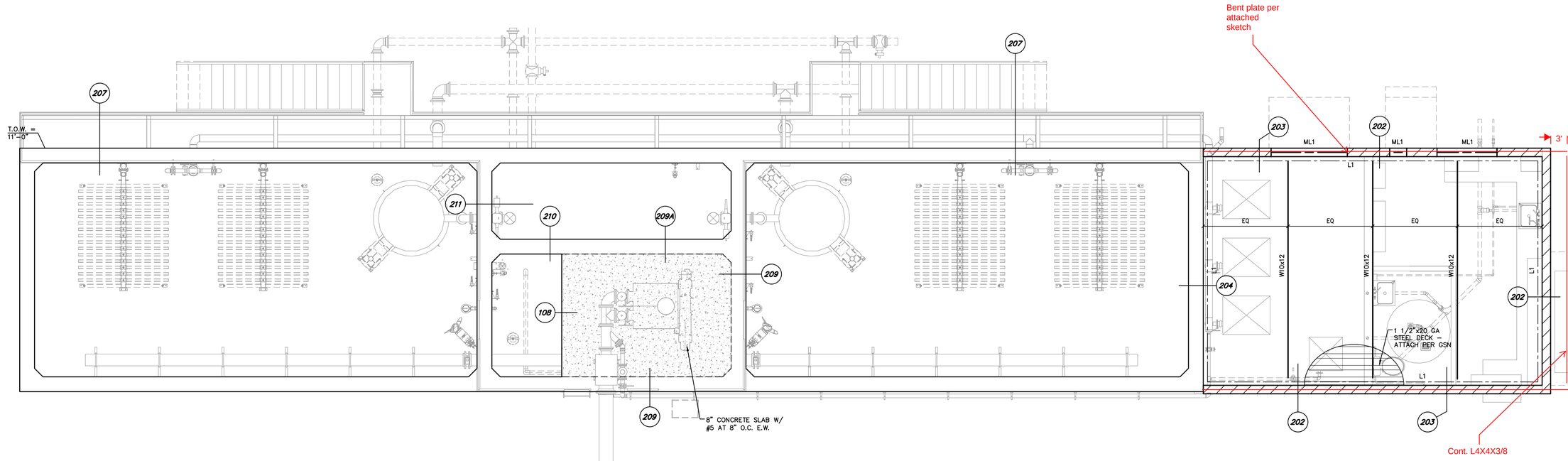

1 FRAMING PLAN

SCALE: 1/4"=1'-0"

LEDGER (L) SCHEDULE

STEEL: 1. ALL LEDGERS SHALL HAVE MINIMUM OF 2 WELD PLATES OR ANCHOR BOLTS AS NOTED BELOW.
2. WELD PLATES OR ANCHOR BOLTS SHALL BE LOCATED NOT LESS THAN 6" NOR MORE THAN 1'-4" FROM END OF LEDGER OR LEDGER SPLICE.

MARK	SIZE / TYPE	CONNECTION
L1	L4x4x1/4"	EMBED PER DETAIL 202 AND 204 AT 48" O.C.

MASONRY LINTEL (ML) SCHEDULE

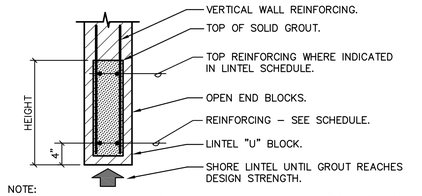

NOTE:
1. VERTICAL REINFORCING TO MATCH AND LAP WALL REINFORCING PER G.S.N.
2. EXTEND GROUT, OPEN END MASONRY UNITS AND REINFORCING 2'-0" PAST EACH JAMB. USE CORNER BARS WHERE 2'-0" CANNOT BE ACHIEVED.

MARK	HEIGHT	REINFORCING	REMARKS
ML1	16"	2- #5 BOTTOM	---

ISSUED FOR BID

PREPARED BY:
PACE
Advanced Water Engineering
8723 E. VIA de VENTURA, STE. 250 | SCOTTSDALE, CA 85258
P: (480) 991-3595 | www.paceadvisor.com
TAYLOR B. PIERCE R.C.E 70097 DATE

NO	BY	DATE	REVISIONS	DATE	APP.

Registered Professional Engineer (Civil) CERTIFICATE NO. 70374 JAMES APPLEYARD Date Signed 10/31/25 ARIZONA, U.S.A.

PREPARED BY: PKA
DESIGNED BY: JA
DRAWN BY: NS
CHECKED BY: JA
SCALE: AS NOTED
DATE: SEP 2025
JOB NO.: 23364

THESE DRAWINGS ARE THE PROPERTY OF P.A.C.E. AND SHALL NOT BE REPRODUCED IN ANY MANNER NOR BE USED FOR CONSTRUCTION UNLESS STAMPED "ISSUED FOR CONSTRUCTION".

TITLE: FRAMING PLAN

JOB: TOWN OF JEROME WASTEWATER TREATMENT PLANT YAVAPAI AZ

SHEET S2.01

60 OF 99 SHEETS

JOB NO. 23364

PK ASSOCIATES
CONSULTING STRUCTURAL ENGINEERS

Job Name Jerome

Item I.

Job No. _____ Sheet No. _____

By J.A. Date 5/28/26

1. Steel deck
2. Cont. 1/4" bent steel plate
3. 1/2" X 6" X 6" steel plate w/ (2) 3/4" ø H.S. @ 4" O.C.
4. ± 1" dry pack
5. Cont. #5 in 8" deep grouted bond beam
6. Masonry Wall

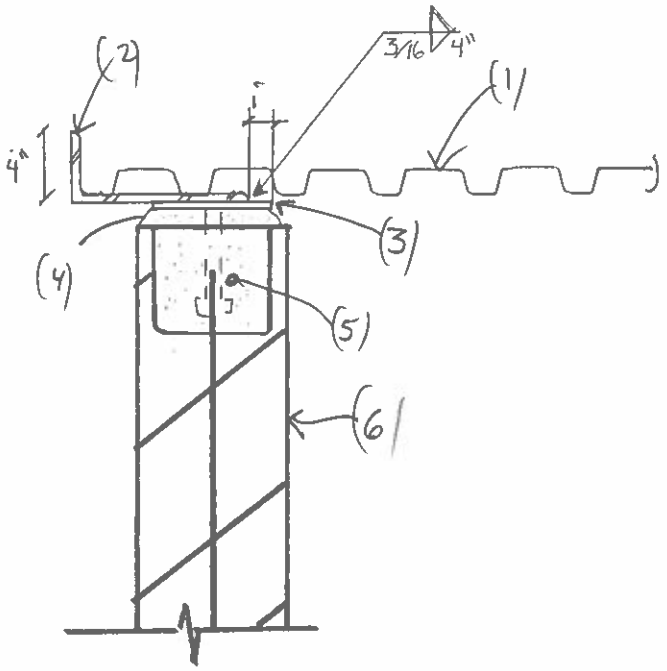

Steel Deck @ Masonry Wall

BID FORM FOR CONSTRUCTION CONTRACT
ADDENDUM 2 VERSION

Contractor Name: Fann Environmental, LLC

The terms used in this Bid with initial capital letters have the meanings stated in the Instructions to Bidders, the General Conditions, and the Supplementary Conditions.

ARTICLE 1—OWNER AND BIDDER

1.01 This Bid is submitted to:

Town of Jerome
Submitted electronically via email to tpierce@pacewater.com. Alternatively, Bidder may submit a hard copy the Town of Jerome, 600 Clark Street, Jerome, AZ 86331.

The undersigned Bidder proposes and agrees, if this Bid is accepted, to enter into an Agreement with Owner in the form included in the Bidding Documents to perform all Work as specified or indicated in the Bidding Documents for the prices and within the times indicated in this Bid and in accordance with the other terms and conditions of the Bidding Documents.

ARTICLE 2—ATTACHMENTS TO THIS BID

2.01 The following documents are submitted with and made a condition of this Bid:

A. Required Bid security;

B. List of Proposed Subcontractors;

~~C. List of Proposed Suppliers;~~

D. Evidence of authority to do business in the state of the Project; or a written covenant to obtain such authority within the time for acceptance of Bids;

E. Contractor's license number as evidence of Bidder's State Contractor's License or a covenant by Bidder to obtain said license within the time for acceptance of Bids;

F. Required Bidder Qualification Statement with supporting data; ~~and~~

G. If Bid amount exceeds $10,000, signed Compliance Statement (RD 400-6). Refer to specific equal opportunity requirements set forth in the Supplementary Conditions of the Construction Contract (EJCDC C-800);

H. If Bid amount exceeds $25,000, signed Certification Regarding Debarment, Suspension, Ineligibility and Voluntary Exclusion - Lower Tier Covered Transactions (AD-1048);

I. If Bid amount exceeds $100,000, signed RD Instruction 1940-Q Exhibit A-1, Certification for Contracts, Grants, and Loans.

ARTICLE 3—BASIS OF BID—LUMP SUM BID AND UNIT PRICES

3.01 *Lump Sum Bids*

A. Bidder will complete the Work in accordance with the Contract Documents for the following lump sum (stipulated) price(s), together with any Unit Prices indicated in Paragraph 3.02:

Copyright© 2018 National Society of Professional Engineers, American Council of Engineering Companies, and American Society of Civil Engineers. All rights reserved.

1. Lump Sum Price (Base Bid and Alternates)

BASE BID LUMP SUM BREAKDOWN					
	Item Description	Unit	Estimated Qty	Bid Unit Price	Total Bid Price
1	ACCESS ROAD & SITE WORK				
1.1	SWPPP	LS	1	$ 175,000.00	$ 175,000.00
1.2	Access Road (cut, grading, paving)	CY	3,672	$ 122.23	$ 448,828.56
1.3	Roadway Appurtenance (guardrail, gates, catch basins)	LS	1	$ 460,000.00	$ 460,000.00
1.4	Traffic Control	LS	1	$ 37,500.00	$ 37,500.00
2	12" SEWER LINE IMPROVEMENTS				
2.1	12" FPVC New Sewer Main	LF	149	$ 400.00	$ 59,600.00
2.2	Sewer Road Alignment Cut to Fill	CY	498	$ 95.00	$ 47,310.00
2.3	48" Manholes	EA	2	$ 10,500.00	$ 21,000.00
2.4	Bypass Plumbing and Equipment	LS	1	$ 26,000.00	$ 26,000.00
3	TREATMENT PLANT SITE				
3.1	Survey, Staking & Materials Testing	LS	1	$ 130,000.00	$ 130,000.00
3.2	Clearing & Grubbing	LS	1	$ 130,000.00	$ 130,000.00
3.3	Earthwork (Shoring, Erosion Control & Final Site Grading)	LS	1	$ 250,000.00	$ 250,000.00
3.4	Earthwork (Excavation, Fill & Backfill)	CY	1,628	$ 217.43	$ 353,976.04
3.5	Yard Piping	LS	1	$ 285,000.00	$ 285,000.00

Copyright© 2018 National Society of Professional Engineers, American Council of Engineering Companies, and American Society of Civil Engineers. All rights reserved.

BASE BID LUMP SUM BREAKDOWN					
	Item Description	Unit	Estimated Qty	Bid Unit Price	Total Bid Price
3.6	Fencing	LF	150	$ 95.00	$ 14,250.00
3.7	Blower / Admin Building	SF	528	$ 350.00	$ 184,800.00
3.8	Reed Bed Conversion to Drying Beds	LS	1	$ 450,000.00	$ 450,000.00
3.9	Wetland Cells Conversion to Emergency Overflow	LS	1	$ 408,175.00	$ 408,175.00
3.10	Retaining Walls	LF	295	$ 2,932.20	$ 864,999.00
3.11	Structural Concrete (SBR Tanks, Site, Chlorine Contact Channel)	CY	275	$ 3,200.00	$ 880,000.00
3.12	SBR Equipment	LS	1	$ 1,286,240.00	$ 1,286,240.00
3.13	Headworks Equipment	LS	1	$ 300,000.00	$ 300,000.00
3.14	Sludge Bagging Unit	LS	1	$ 197,972.00	$ 197,972.00
3.15	Polymer Dosing System	LS	1	$ 113,986.00	$ 113,986.00
3.16	Sludge Feed Pump	LS	1	$ 49,662.00	$ 49,662.00
3.17	Shade Structure	LS	1	$ 40,000.00	$ 40,000.00
3.18	Disinfection & Miscellaneous Equipment	LS	1	$ 30,000.00	$ 30,000.00
3.19	Site Electrical and Standby Generator	LS	1	$ 1,600,000.00	$ 1,600,000.00

Copyright© 2018 National Society of Professional Engineers, American Council of Engineering Companies, and American Society of Civil Engineers. All rights reserved.

BASE BID LUMP SUM BREAKDOWN					
	Item Description	Unit	Estimated Qty	Bid Unit Price	Total Bid Price
3.20	Upgrade Site to 3 Phase Power	LS	1	$ 210,000	$ 210,000.00
4	OTHER				
4.1	Mobilization/Demobilization	LS	1	$ 480,767.00	$ 480,767.00
4.2	Taxes	LS	1	$ 253,317.00	$ 253,317.00
				TOTAL BASE BID LUMP SUM AMOUNT	$ 9,788,382.60

BID ALTERNATES LUMP SUM BREAKDOWN NEW 12" SEWER AND ACCESS ROAD					
	Item Description	Unit	Estimated Qty	Bid Unit Price	Total Bid Price
1	**Bid Adder:** 12" FPVC New Sewer Main	LF	1,660	$ 195.25	$ 324,115.00
2	**Bid Adder:** Restore Lateral Connections	EA	5	$ 6,500.00	$ 32,500.00
3	**Bid Adder:** Sewer Road Alignment Cut to Fill	CY	4,010	$ 95.00	$ 380,950.00
4	**Bid Adder:** 48" Manholes	EA	10	$ 8,400.00	$ 84,000.00
5	**Bid Adder:** Rockfall Barrier	LF	150	$ 600.00	$ 90,000.00
				TOTAL ALTERNATES LUMP SUM AMOUNT	$ 911,565.00

Copyright© 2018 National Society of Professional Engineers, American Council of Engineering Companies, and American Society of Civil Engineers. All rights reserved.

TOTAL LUMP SUM PRICE (BASE BID AND ALTERNATES)			
	Item Description		**Total Bid Price**
1	Total Lump Sum for Base Bid	$	9,788,382.60
2	Total Lump Sum for Bid Adder: New 12" Sewer and Access Road	$	911,565.00
	TOTAL LUMP SUM BASE BID AND ALTERNATES PRICE	$	10,699,947.60

B. All specified cash allowance(s) are included in the price(s) set forth below, and have been computed in accordance with Paragraph 13.02 of the General Conditions.

TOTAL ALLOWANCE PRICE			
	Item Description		**Total Bid Price**
1	Materials Testing	$	65,000.00
	TOTAL ALLOWANCE PRICE	$	65,000.00

ARTICLE 4—DELETED

ARTICLE 5—DELETED

ARTICLE 6—TIME OF COMPLETION

6.01 Bidder agrees that the Work will be substantially complete and will be completed and ready for final payment in accordance with Paragraph 15.06 of the General Conditions on or before the dates or within the number of calendar days indicated in the Agreement.

6.02 **[Deleted]**

6.03 **[Deleted]**

6.04 Bidder accepts the provisions of the Agreement as to liquidated damages.

ARTICLE 7—BIDDER'S ACKNOWLEDGEMENTS: ACCEPTANCE PERIOD, INSTRUCTIONS, AND RECEIPT OF ADDENDA

7.01 *Bid Acceptance Period*

A. This Bid will remain subject to acceptance for 60 days after the Bid opening, or for such longer period of time that Bidder may agree to in writing upon request of Owner.

Copyright© 2018 National Society of Professional Engineers, American Council of Engineering Companies, and American Society of Civil Engineers. All rights reserved.

7.02 *Instructions to Bidders*

A. Bidder accepts all of the terms and conditions of the Instructions to Bidders, including without limitation those dealing with the disposition of Bid security.

7.03 *Receipt of Addenda*

A. Bidder hereby acknowledges receipt of the following Addenda:

Addendum Number	Addendum Date
1	5/7/2026
2	5/11/2026
3	5/20/2026
4	5/27/2026
5	5/28/2026

7.04 **[Deleted]**

ARTICLE 8—BIDDER'S REPRESENTATIONS AND CERTIFICATIONS

8.01 *Bidder's Representations*

A. In submitting this Bid, Bidder represents the following:

1. Bidder has examined and carefully studied the Bidding Documents, including Addenda.
2. **[Deleted]**
3. Bidder is familiar with all Laws and Regulations that may affect cost, progress, and performance of the Work**, including all American Iron and Steel requirements.**
4. Bidder has carefully studied the reports of explorations and tests of subsurface conditions at or adjacent to the Site and the drawings of physical conditions relating to existing surface or subsurface structures at the Site that have been identified in the Supplementary Conditions, with respect to the Technical Data in such reports and drawings.
5. Bidder has carefully studied the reports and drawings relating to Hazardous Environmental Conditions, if any, at or adjacent to the Site that have been identified in the Supplementary Conditions, with respect to Technical Data in such reports and drawings.
6. Bidder has considered the information known to Bidder itself; information commonly known to contractors doing business in the locality of the Site; information and observations obtained from visits to the Site; the Bidding Documents; and the Technical Data identified in the Supplementary Conditions or by definition, with respect to the effect of such information, observations, and Technical Data on (a) the cost, progress, and performance of the Work; (b) the means, methods, techniques, sequences, and procedures of construction to be employed by Bidder, if selected as Contractor; and (c) Bidder's (Contractor's) safety precautions and programs.
7. Based on the information and observations referred to in the preceding paragraph, Bidder agrees that no further examinations, investigations, explorations, tests, studies,

Copyright© 2018 National Society of Professional Engineers, American Council of Engineering Companies, and American Society of Civil Engineers. All rights reserved.

or data are necessary for the performance of the Work at the Contract Price, within the Contract Times, and in accordance with the other terms and conditions of the Contract.

8. Bidder is aware of the general nature of work to be performed by Owner and others at the Site that relates to the Work as indicated in the Bidding Documents.

9. Bidder has given Engineer written notice of all conflicts, errors, ambiguities, or discrepancies that Bidder has discovered in the Bidding Documents, and of discrepancies between Site conditions and the Contract Documents, and the written resolution thereof by Engineer is acceptable to Contractor.

10. The Bidding Documents are generally sufficient to indicate and convey understanding of all terms and conditions for performance and furnishing of the Work.

11. The submission of this Bid constitutes an incontrovertible representation by Bidder that without exception the Bid and all prices in the Bid are premised upon performing and furnishing the Work required by the Bidding Documents.

8.02 *Bidder's Certifications*

A. The Bidder certifies the following:

1. This Bid is genuine and not made in the interest of or on behalf of any undisclosed individual or entity and is not submitted in conformity with any collusive agreement or rules of any group, association, organization, or corporation.

2. Bidder has not directly or indirectly induced or solicited any other Bidder to submit a false or sham Bid.

3. Bidder has not solicited or induced any individual or entity to refrain from bidding.

4. Bidder has not engaged in corrupt, fraudulent, collusive, or coercive practices in competing for the Contract. For the purposes of this Paragraph 8.02.A:

a. Corrupt practice means the offering, giving, receiving, or soliciting of anything of value likely to influence the action of a public official in the bidding process.

b. Fraudulent practice means an intentional misrepresentation of facts made (a) to influence the bidding process to the detriment of Owner, (b) to establish bid prices at artificial non-competitive levels, or (c) to deprive Owner of the benefits of free and open competition.

c. Collusive practice means a scheme or arrangement between two or more Bidders, with or without the knowledge of Owner, a purpose of which is to establish bid prices at artificial, non-competitive levels.

d. Coercive practice means harming or threatening to harm, directly or indirectly, persons or their property to influence their participation in the bidding process or affect the execution of the Contract.

Copyright© 2018 National Society of Professional Engineers, American Council of Engineering Companies, and American Society of Civil Engineers. All rights reserved.

BIDDER hereby submits this Bid as set forth above:

Bidder:

Fann Environmental, LLC
(typed or printed name of organization)

By: _____
(individual's signature)

Name: Michael S. Young
(typed or printed)

Title: President
(typed or printed)

Date: 06/03/2026
(typed or printed)

If Bidder is a corporation, a partnership, or a joint venture, attach evidence of authority to sign.

Attest: _____
(individual's signature)

Name: Poppy Keegan
(typed or printed)

Title: Executive Assistant
(typed or printed)

Date: 06/03/2026
(typed or printed)

Address for giving notices:
6708 Corsair Ave Ste A
Prescott AZ 86301

Bidder's Contact:

Name: Michael S. Young
(typed or printed)

Title: President
(typed or printed)

Phone: (928) 778-5335

Email: mikeyoung@fannenvironmental.com

Address:
6708 Corsair Ave Ste A
Prescott AZ 86301

Bidder's Contractor License No.: (if applicable) AZ ROC#s 206365-A, 249529-B, 276357-CR11

Copyright© 2018 National Society of Professional Engineers, American Council of Engineering Companies, and American Society of Civil Engineers. All rights reserved.

BID BOND (PENAL SUM FORM)

Bidder	**Surety**
Name: Fann Environmental, LLC Address *(principal place of business)*: 6708 Corsair Avenue Suite A Prescott, AZ 86301	Name: Liberty Mutual Insurance Company Address *(principal place of business)*: 175 Berkeley Street, Boston MA 02117
Owner	**Bid**
Name: **Town of Jerome** Address *(principal place of business)*: **600 Clark Street, Jerome AZ, 86331**	Project *(name and location)*: **Jerome Wastewater Treatment Plant Improvements, Sewer Plant Road, Jerome, AZ 86331** Bid Due Date: **June 1, 2026**

Bond

Penal Sum: Ten percent (10%) of total bid amount

Date of Bond: June 1, 2026

Surety and Bidder, intending to be legally bound hereby, subject to the terms set forth in this Bid Bond, do each cause this Bid Bond to be duly executed by an authorized officer, agent, or representative.

Bidder	Surety
Fann Environmental, LLC *(Full formal name of Bidder)*	Liberty Mutual Insurance Company *(Full formal name of Surety) (corporate seal)*
By: _____ *(Signature)*	By: _____ *(Signature) (Attach Power of Attorney)*
Name: MICHAEL YOUNG *(Printed or typed)*	Name: Desirae Darko *(Printed or typed)*
Title: PRESIDENT	Title: Attorney-in-Fact
Attest: _____ *(Signature)*	Attest: _____ *(Signature)*
Name: Poppy Keegan *(Printed or typed)*	Name: Genny Beswick *(Printed or typed)*
Title: Executive Assistant	Title: CL Account Manager

Notes: (1) Note: Addresses are to be used for giving any required notice. (2) Provide execution by any additional parties, such as joint venturers, if necessary.

EJCDC® C-430, Bid Bond (Penal Sum Form).
Copyright© 2018 National Society of Professional Engineers, American Council of Engineering Companies, and American Society of Civil Engineers. All rights reserved.

1. Bidder and Surety, jointly and severally, bind themselves, their heirs, executors, administrators, successors, and assigns to pay to Owner upon default of Bidder the penal sum set forth on the face of this Bond. Payment of the penal sum is the extent of Bidder's and Surety's liability. Recovery of such penal sum under the terms of this Bond will be Owner's sole and exclusive remedy upon default of Bidder.
2. Default of Bidder occurs upon the failure of Bidder to deliver within the time required by the Bidding Documents (or any extension thereof agreed to in writing by Owner) the executed Agreement required by the Bidding Documents and any performance and payment bonds required by the Bidding Documents.
3. This obligation will be null and void if:
   3.1. Owner accepts Bidder's Bid and Bidder delivers within the time required by the Bidding Documents (or any extension thereof agreed to in writing by Owner) the executed Agreement required by the Bidding Documents and any performance and payment bonds required by the Bidding Documents, or
   3.2. All Bids are rejected by Owner, or
   3.3. Owner fails to issue a Notice of Award to Bidder within the time specified in the Bidding Documents (or any extension thereof agreed to in writing by Bidder and, if applicable, consented to by Surety when required by Paragraph 5 hereof).
4. Payment under this Bond will be due and payable upon default of Bidder and within 30 calendar days after receipt by Bidder and Surety of written notice of default from Owner, which notice will be given with reasonable promptness, identifying this Bond and the Project and including a statement of the amount due.
5. Surety waives notice of any and all defenses based on or arising out of any time extension to issue Notice of Award agreed to in writing by Owner and Bidder, provided that the total time for issuing Notice of Award including extensions does not in the aggregate exceed 120 days from the Bid due date without Surety's written consent.
6. No suit or action will be commenced under this Bond prior to 30 calendar days after the notice of default required in Paragraph 4 above is received by Bidder and Surety, and in no case later than one year after the Bid due date.
7. Any suit or action under this Bond will be commenced only in a court of competent jurisdiction located in the state in which the Project is located.
8. Notices required hereunder must be in writing and sent to Bidder and Surety at their respective addresses shown on the face of this Bond. Such notices may be sent by personal delivery, commercial courier, or by United States Postal Service registered or certified mail, return receipt requested, postage pre-paid, and will be deemed to be effective upon receipt by the party concerned.
9. Surety shall cause to be attached to this Bond a current and effective Power of Attorney evidencing the authority of the officer, agent, or representative who executed this Bond on behalf of Surety to execute, seal, and deliver such Bond and bind the Surety thereby.
10. This Bond is intended to conform to all applicable statutory requirements. Any applicable requirement of any applicable statute that has been omitted from this Bond will be deemed to be included herein as if set forth at length. If any provision of this Bond conflicts with any applicable statute, then the provision of said statute governs and the remainder of this Bond that is not in conflict therewith continues in full force and effect.
11. The term "Bid" as used herein includes a Bid, offer, or proposal as applicable.

Copyright© 2018 National Society of Professional Engineers, American Council of Engineering Companies, and American Society of Civil Engineers. All rights reserved.

Liberty Mutual SURETY

POWER OF ATTORNEY

Liberty Mutual Insurance Company
The Ohio Casualty Insurance Company
West American Insurance Company

Certificate No: **8213139 - 969537**

KNOWN ALL PERSONS BY THESE PRESENTS: That The Ohio Casualty Insurance Company is a corporation duly organized under the laws of the State of New Hampshire, that Liberty Mutual Insurance Company is a corporation duly organized under the laws of the State of Massachusetts, and West American Insurance Company is a corporation duly organized under the laws of the State of Indiana (herein collectively called the "Companies"), pursuant to and by authority herein set forth, does hereby name, constitute and appoint, Blake C. Johnson, Cliff Spickler, Desirae Darko, Halle Finn, Lori L. Dawson - Brown, Nick Duckworth, Wendy Capirci

all of the city of Phoenix state of AZ each individually if there be more than one named, its true and lawful attorney-in-fact to make, execute, seal, acknowledge and deliver, for and on its behalf as surety and as its act and deed, any and all undertakings, bonds, recognizances and other surety obligations, in pursuance of these presents and shall be as binding upon the Companies as if they have been duly signed by the president and attested by the secretary of the Companies in their own proper persons.

IN WITNESS WHEREOF, this Power of Attorney has been subscribed by an authorized officer or official of the Companies and the corporate seals of the Companies have been affixed thereto this 14th day of February, 2025.

LIBERTY MUTUAL INSURANCE COMPANY INCORPORATED 1912 MASSACHUSETTS

THE OHIO CASUALTY INSURANCE COMPANY INCORPORATED 1919 NEW HAMPSHIRE

WEST AMERICAN INSURANCE COMPANY INCORPORATED 1991 INDIANA

Liberty Mutual Insurance Company
The Ohio Casualty Insurance Company
West American Insurance Company

By: _____
Nathan J. Zangerle, Assistant Secretary

State of PENNSYLVANIA
County of MONTGOMERY ss

On this 14th day of February, 2025 before me personally appeared Nathan J. Zangerle, who acknowledged himself to be the Assistant Secretary of Liberty Mutual Insurance Company, The Ohio Casualty Company, and West American Insurance Company, and that he, as such, being authorized so to do, execute the foregoing instrument for the purposes therein contained by signing on behalf of the corporations by himself as a duly authorized officer.

IN WITNESS WHEREOF, I have hereunto subscribed my name and affixed my notarial seal at Plymouth Meeting, Pennsylvania, on the day and year first above written.

TERESA PASTELLA COMMONWEALTH OF PENNSYLVANIA NOTARY PUBLIC

Commonwealth of Pennsylvania - Notary Seal
Teresa Pastella, Notary Public
Montgomery County
My commission expires March 28, 2029
Commission number 1126044
Member, Pennsylvania Association of Notaries

By: _____
Teresa Pastella, Notary Public

This Power of Attorney is made and executed pursuant to and by authority of the following By-laws and Authorizations of The Ohio Casualty Insurance Company, Liberty Mutual Insurance Company, and West American Insurance Company which resolutions are now in full force and effect reading as follows:

ARTICLE IV – OFFICERS: Section 12. Power of Attorney.
Any officer or other official of the Corporation authorized for that purpose in writing by the Chairman or the President, and subject to such limitation as the Chairman or the President may prescribe, shall appoint such attorneys-in-fact, as may be necessary to act in behalf of the Corporation to make, execute, seal, acknowledge and deliver as surety any and all undertakings, bonds, recognizances and other surety obligations. Such attorneys-in-fact, subject to the limitations set forth in their respective powers of attorney, shall have full power to bind the Corporation by their signature and execution of any such instruments and to attach thereto the seal of the Corporation. When so executed, such instruments shall be as binding as if signed by the President and attested to by the Secretary. Any power or authority granted to any representative or attorney-in-fact under the provisions of this article may be revoked at any time by the Board, the Chairman, the President or by the officer or officers granting such power or authority.

ARTICLE XIII – Execution of Contracts: Section 5. Surety Bonds and Undertakings.
Any officer of the Company authorized for that purpose in writing by the chairman or the president, and subject to such limitations as the chairman or the president may prescribe, shall appoint such attorneys-in-fact, as may be necessary to act in behalf of the Company to make, execute, seal, acknowledge and deliver as surety any and all undertakings, bonds, recognizances and other surety obligations. Such attorneys-in-fact subject to the limitations set forth in their respective powers of attorney, shall have full power to bind the Company by their signature and execution of any such instruments and to attach thereto the seal of the Company. When so executed such instruments shall be as binding as if signed by the president and attested by the secretary.

Certificate of Designation – The President of the Company, acting pursuant to the Bylaws of the Company, authorizes Nathan J. Zangerle, Assistant Secretary to appoint such attorneys-in-fact as may be necessary to act on behalf of the Company to make, execute, seal, acknowledge and deliver as surety any and all undertakings, bonds, recognizances and other surety obligations.

Authorization – By unanimous consent of the Company's Board of Directors, the Company consents that facsimile or mechanically reproduced signature of any assistant secretary of the Company, wherever appearing upon a certified copy of any power of attorney issued by the Company in connection with surety bonds, shall be valid and binding upon the Company with the same force and effect as though manually affixed.

I, Renee C. Llewellyn, the undersigned, Assistant Secretary, The Ohio Casualty Insurance Company, Liberty Mutual Insurance Company, and West American Insurance Company do hereby certify that the original power of attorney of which the foregoing is a full, true and correct copy of the Power of Attorney executed by said Companies, is in full force and effect and has not been revoked.

IN TESTIMONY WHEREOF, I have hereunto set my hand and affixed the seals of said Companies this 1st day of June, 2026.

LIBERTY MUTUAL INSURANCE COMPANY INCORPORATED 1912 MASSACHUSETTS

THE OHIO CASUALTY INSURANCE COMPANY INCORPORATED 1919 NEW HAMPSHIRE

WEST AMERICAN INSURANCE COMPANY INCORPORATED 1991 INDIANA

By: _____
Renee C. Llewellyn, Assistant Secretary

Not valid for mortgage, note, loan, letter of credit, currency rate, interest rate or residual value guarantees.

For bond and/or Power of Attorney (POA) verification inquiries, please call 610-832-8240 or email HOSUR@libertymutual.com.

QUALIFICATIONS STATEMENT

ARTICLE 1—GENERAL INFORMATION

1.01 Provide contact information for the Business:

Legal Name of Business:	Fann Environmental, LLC		
Corporate Office			
Name:	Michael S. Young	Phone number:	(928) 778-5335
Title:	President	Email address:	mikeyoung@fannenvironmental.com
Business address of corporate office:	Using Clark Street, or PO Box? Corsair Ave		
	6708 Corsair Ave Ste A		
	Prescott AZ 86301		
Local Office			
Name:	Michael S. Young	Phone number:	(928) 778-5335
Title:	President	Email address:	mikeyoung@fannenvironmental.com
Business address of local office:	6708 Corsair Ave Ste A		
	Prescott AZ 86301		

1.02 Provide information on the Business's organizational structure:

Form of Business:	☐ Sole Proprietorship ☐ Partnership ☐ Corporation		
☒ Limited Liability Company ☐ Joint Venture comprised of the following companies:			
	1.		
	2.		
	3.		
Provide a separate Qualification Statement for each Joint Venturer.			
Date Business was formed:	10/2004	State in which Business was formed:	AZ
Is this Business authorized to operate in the Project location?	☒ Yes ☐ No ☐ Pending		

1.03 Identify all businesses that own Business in whole or in part (25% or greater), or that are wholly or partly (25% or greater) owned by Business:

Name of business:	N/A	Affiliation:	
Address:			
Name of business:		Affiliation:	
Address:			
Name of business:		Affiliation:	

Copyright© 2018 National Society of Professional Engineers, American Council of Engineering Companies, and American Society of Civil Engineers. All rights reserved.

Address:	

1.04 Provide information regarding the Business's officers, partners, and limits of authority.

Name:	Michael Young	Title:	President
Authorized to sign contracts: ☒ Yes ☐ No		Limit of Authority:	$ N/A
Name:	Michael Fann	Title:	Majority Member
Authorized to sign contracts: ☒ Yes ☐ No		Limit of Authority:	$ N/A
Name:	Linda O'Brien	Title:	Member
Authorized to sign contracts: ☐ Yes ☒ No		Limit of Authority:	$ 0
Name:	Gary Steinmetz, Dan Lee, Laurie Young	Title:	Members (non-signing)

ARTICLE 2—LICENSING

2.01 Provide information regarding licensure for Business:

Name of License:	A General Engineering		
Licensing Agency:	Arizona Registrar of Contractors		
License No:	206365	Expiration Date:	04/30/2027
Name of License:	B-1 General Commercial Contractor		
Licensing Agency:	Arizona Registrar of Contractors		
License No:	249529	Expiration Date:	09/30/2026

ARTICLE 3—DIVERSE BUSINESS CERTIFICATIONS

3.01 Provide information regarding Business's Diverse Business Certification, if any. Provide evidence of current certification.

Certification	Certifying Agency	Certification Date
☐ Disadvantaged Business Enterprise		
☐ Minority Business Enterprise		
☐ Woman-Owned Business Enterprise		
☐ Small Business Enterprise		
☐ Disabled Business Enterprise		
☐ Veteran-Owned Business Enterprise		
☐ Service-Disabled Veteran-Owned Business		
☐ HUBZone Business (Historically Underutilized) Business		
☐ Other		

Copyright© 2018 National Society of Professional Engineers, American Council of Engineering Companies, and American Society of Civil Engineers. All rights reserved.

☒ None

ARTICLE 4—SAFETY

4.01 Provide information regarding Business's safety organization and safety performance.

Name of Business's Safety Officer:	Paul Johnson	
Safety Certifications		
Certification Name	Issuing Agency	Expiration
OSHA 30-Hour Construction	USF OSHA Training Institute	N/A
OSHA Competent-Person Scaffolding	MN Assoc Builders & Contractors	N/A

4.02 Provide Worker's Compensation Insurance Experience Modification Rate (EMR), Total Recordable Frequency Rate (TRFR) for incidents, and Total Number of Recorded Manhours (MH) for the last 3 years and the EMR, TRFR, and MH history for the last 3 years of any proposed Subcontractor(s) that will provide Work valued at 10% or more of the Contract Price. Provide documentation of the EMR history for Business and Subcontractor(s).

*Note - Fann Environmental shares an insurance policy with Fann Contracting, therefore our EMR is impacted by their safety record. TRFR & MH are listed for Fann Env only per OSHA 300A. We had only a small cut w/ a few stitches in 2024 and a spider bite in 2023.

Year	2025			2024			2023		
Company	EMR	TRFR	MH	EMR	TRFR	MH	EMR	TRFR	MH
Fann Environmental	1.03*	0.00	34952	1.06*	5.44	36745	1.10*	5.47	36589

ARTICLE 5—FINANCIAL

5.01 Provide information regarding the Business's financial stability. Provide the most recent audited financial statement, and if such audited financial statement is not current, also provide the most current financial statement.

Financial Institution:	National Bank of Arizona	
Business address:	162 S Montezuma St Prescott AZ 86303	
Date of Business's most recent financial statement:	3/2026	☒ Attached
Date of Business's most recent audited financial statement:	N/A	☐ Attached
Financial indicators from the most recent financial statement		
Contractor's Current Ratio (Current Assets ÷ Current Liabilities)		2.47
Contractor's Quick Ratio ((Cash and Cash Equivalents + Accounts Receivable + Short Term Investments) ÷ Current Liabilities)		2.47

Copyright© 2018 National Society of Professional Engineers, American Council of Engineering Companies, and American Society of Civil Engineers. All rights reserved.

ARTICLE 6—SURETY INFORMATION

6.01 Provide information regarding the surety company that will issue required bonds on behalf of the Business, including but not limited to performance and payment bonds.

Surety Name:	Liberty Mutual Insurance Company		
Surety is a corporation organized and existing under the laws of the state of:		Massachusetts	
Is surety authorized to provide surety bonds in the Project location?		☒ Yes ☐ No	
Is surety listed in "Companies Holding Certificates of Authority as Acceptable Sureties on Federal Bonds and as Acceptable Reinsuring Companies" published in Department Circular 570 (as amended) by the Bureau of the Fiscal Service, U.S. Department of the Treasury? ☒ Yes ☐ No			
Mailing Address (principal place of business):	Agency of Record: INSURICA Southwest Insurance Services, LLC 4686 E Van Buren #310 Phoenix AZ 85008		
Physical Address (principal place of business):	4686 E Van Buren #310 Phoenix AZ 85008		
Phone (main):	(602) 273-1625	Phone (claims):	(602) 273-1625

ARTICLE 7—INSURANCE

7.01 Provide information regarding Business's insurance company(s), including but not limited to its Commercial General Liability carrier. Provide information for each provider.

Name of insurance provider, and type of policy (CLE, auto, etc.):			
Insurance Provider		Type of Policy (Coverage Provided)	
Phoenix Insurance Company		Commercial General Liability, Workers Comp	
Traveler's Indemnity Co of CT		Automobile Liability	
Traveler's Property Casualty Co of America		Umbrella	
St Paul Surplus Lines Insurance Co Zurich American Insurance Co		Pollution & Professional Liability Installation Floater & Contractors Equipment	
Are providers licensed or authorized to issue policies in the Project location?			☒ Yes ☐ No
Does provider have an A.M. Best Rating of A-VII or better?			☒ Yes ☐ No
Mailing Address (principal place of business):	Willis Towers Watson Insurance Services West, Inc. PO Box 305191 Nashville TN 37230		
Physical Address (principal place of business):	Willis Towers Watson Insurance Services West, Inc. 1144 W Washington St Tempe AZ 85288		
Phone (main):	(602) 245-6020	Phone (claims):	(602) 245-6020

Copyright© 2018 National Society of Professional Engineers, American Council of Engineering Companies, and American Society of Civil Engineers. All rights reserved.

ARTICLE 8—CONSTRUCTION EXPERIENCE

8.01 Provide information that will identify the overall size and capacity of the Business.

Average number of current full-time employees:	18
Estimate of revenue for the current year:	$9,000,000
Estimate of revenue for the previous year:	$9,616,000

8.02 Provide information regarding the Business's previous contracting experience.

Years of experience with projects like the proposed project:				
As a general contractor:	21	As a joint venturer:	8	
Has Business, or a predecessor in interest, or an affiliate identified in Paragraph 1.03:				
Been disqualified as a bidder by any local, state, or federal agency within the last 5 years? ☐ Yes ☒ No				
Been barred from contracting by any local, state, or federal agency within the last 5 years? ☐ Yes ☒ No				
Been released from a bid in the past 5 years? ☐ Yes ☒ No				
Defaulted on a project or failed to complete any contract awarded to it? ☐ Yes ☒ No				
Refused to construct or refused to provide materials defined in the contract documents or in a change order? ☐ Yes ☒ No				
Been a party to any currently pending litigation or arbitration? ☐ Yes ☒ No				
Provide full details in a separate attachment if the response to any of these questions is Yes.				

8.03 List all projects currently under contract in Schedule A and provide indicated information.

8.04 List a minimum of three and a maximum of six projects completed in the last 5 years in Schedule B and provide indicated information to demonstrate the Business's experience with projects similar in type and cost of construction.

8.05 In Schedule C, provide information on key individuals whom Business intends to assign to the Project. Provide resumes for those individuals included in Schedule C. Key individuals include the Project Manager, Project Superintendent, Quality Manager, and Safety Manager. Resumes may be provided for Business's key leaders as well.

ARTICLE 9—REQUIRED ATTACHMENTS

9.01 Provide the following information with the Statement of Qualifications:

A. If Business is a Joint Venture, separate Qualifications Statements for each Joint Venturer, as required in Paragraph 1.02. N/A

B. Diverse Business Certifications if required by Paragraph 3.01. None

C. Certification of Business's safety performance if required by Paragraph 4.02. Attached

D. Financial statements as required by Paragraph 5.01. Attached

Copyright© 2018 National Society of Professional Engineers, American Council of Engineering Companies, and American Society of Civil Engineers. All rights reserved.

E. Attachments providing additional information as required by Paragraph 8.02. N/A

F. Schedule A (Current Projects) as required by Paragraph 8.03. Attached

G. Schedule B (Previous Experience with Similar Projects) as required by Paragraph 8.04. Attached

H. Schedule C (Key Individuals) and resumes for the key individuals listed, as required by Paragraph 8.05. Attached

I. Additional items as pertinent.

List of Proposed Subcontractors
Resolution of Signing Authority for LLC
Evidence of Authority to Do Business
Evidence of Licensure
Compliance Statement
Certification Regarding Debarment
Certification for Contracts

Copyright© 2018 National Society of Professional Engineers, American Council of Engineering Companies, and American Society of Civil Engineers. All rights reserved.

This Statement of Qualifications is offered by:

Business: Fann Environmental, LLC
(typed or printed name of organization)

By: 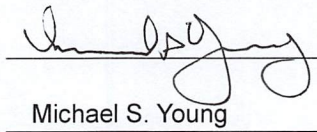
(individual's signature)

Name: Michael S. Young
(typed or printed)

Title: President
(typed or printed)

Date: 06/03/2026
(date signed)

(If Business is a corporation, a partnership, or a joint venture, attach evidence of authority to sign.)

Attest: 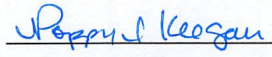
(individual's signature)

Name: Poppy Keegan
(typed or printed)

Title: Executive Assistant
(typed or printed)

Address for giving notices:
6708 Corsair Ave Ste A
Prescott, AZ 86301

Designated Representative:

Name: Michael S. Young
(typed or printed)

Title: President
(typed or printed)

Address:
6708 Corsair Ave Ste A
Prescott, AZ 86301

Phone: (928) 778-5335

Email: mikeyoung@fannenvironmental.com

Copyright© 2018 National Society of Professional Engineers, American Council of Engineering Companies, and American Society of Civil Engineers. All rights reserved.

FANN Environmental, LLC
One Stop Environmental Solutions
6708 Corsair Ave., Suite A • Prescott, AZ 86301 • Phone: 928-778-5335 • Fax: 928-778-5870 • ROC-A-206365 • ROC B-249529

Article 9
Required Attachments

A. Joint Venture Qualifications - Not Applicable
B. Diverse Business Certifications - Not Applicable
C. Certification of Business Safety Performance
D. Financial Statement
E. Additional Info - Not Applicable
F. Schedule A Current Projects
G. Schedule B Previous Experience
H. Schedule C Key Individuals and Resumes
I. Additional Items as Pertinent:
   1. List of Proposed Subcontractors
   2. Resolution of Signing Authority
   3. Corporation Commission Entity Info (Evidence of Bidder's authority to do business in the state per 12.11)
   4. Contractor's Licenses (Evidence of Bidder's Licensure per 12.12)
   5. Compliance Statement (RD400-6)
   6. Certification Regarding Debarment (AD-1048)
   7. Certification for Contracts (RD Instruction 1940-Q Exhibit A-1)

Required Attachment C:
Certification of Safety Performance

June 1, 2026

RE: Fann Environmental, LLC
6708 Corsair Ave., Suite A
Prescott, AZ 86301

Workers Compensation Experience Modification History – 3 Years NCCI

To Whom It May Concern:

Willis Towers Watson, the insurance broker for Fann Environmental, LLC, confirms Fann Environmental' s 3 Year NCCI Experience Modification rate history is as follows:

EMOD Effective Date	NCCI EMOD
11/1/25	1.03
11/1/24	1.06
6/1/24	1.06
6/1/23	1.10

Please contact me should there be any questions regarding this information.

Sincerely,

Deanna Chew, CPCU, ARM, CRIS
Sr. Client Advocate
CA License # OL97350

Willis Towers Watson Insurance Services West, Inc.
d/b/a Willis Towers Watson West Insurance Services, Inc.
CA Insurance License # 0371719

1144 W. Washington Street
Tempe, AZ 85288
D: +1 602 787 6137
O: +1 602 245 6020
deanna.chew@wtwco.com

Required Attachment D:
Financial Statements

Fann Environmental LLC

Financial Statements

March 2026



Fann Environmental, LLC
Income Statement
March 2026

	Current Month	Year to Date	Previous Year to Date
Earned Revenue	$ 566,037	$ 1,793,329	$ 2,060,531
Cost of Earned Revenue	334,108	840,279	1,387,830
	231,929	**953,050**	**672,701**
Equipment Cost	10,438	8,701	5,548
Equipment and Job Overhead	34,188	93,032	63,772
	44,626	**101,733**	**69,320**
Gross Profit From Operations	**187,303**	**851,317**	**603,381**
Estimating Costs	4,744	14,727	12,793
Salaries	24,327	67,549	61,919
Payroll Expenses	-	-	-
Bonuses	-	-	-
Advertising	141	505	34
Contributions	582	737	994
Depreciation	211	634	553
Dues and Subscriptions	-	-	-
Interest	-	-	-
Insurance	7,722	23,165	21,005
Legal and Accounting	2,310	7,064	4,759
Office Expense	32	1,217	1,451
Rent	2,000	6,000	6,000
Taxes and Licenses	-	287	75
Travel and Entertainment	36	286	42
Telephone and Utilities	1,545	5,119	5,106
Bank Charges	(30)	(286)	(269)
Bad Debts	-	-	-
Computer Expenses	2,833	7,888	7,926
Employee Education	347	347	185
Building Maintenance and Repair	340	837	2,515
Miscellaneous	-	-	-
Total Administrative Expenses	**47,140**	**136,076**	**125,088**
Gain on Sale of Assets	-	19,643	-
Arizona Income Tax	-	-	-
Interest Income	2,213	4,891	14,322
Other Income (Expense)	4,392	5,838	3,636
NET INCOME (LOSS)	**146,768**	**745,613**	**496,251**
MEMBERS' DISTRIBUTIONS (Cash)	**-**	**-**	**(182,963)**
MEMBERS' DISTRIBUTIONS (Non-Cash)			
MEMBERS' EQUITY, beginning of period	**2,026,451**	**1,427,606**	**2,132,879**
MEMBERS' EQUITY, end of period	**$2,173,219**	**$ 2,173,219**	**$2,446,167**

Fann Environmental, LLC
Balance Sheet
March 2026

ASSETS	Current Year	Previous Year
Current Assets		
Cash	1,027,131	1,726,081
Accounts Receivable	1,887,275	1,563,403
Contract Assets	92,121	110,138
Deposits and Other Current Assets	3,907	4,036
Total Current Assets	**3,010,434**	**3,403,658**
Fixed Asssets		
Office & Computer Equipment	24,145	60,163
Construction Equipment	413,088	413,088
Trucks	761,167	679,011
Leasehold Improvements	13,597	13,597
	1,211,997	**1,165,860**
Less Accumulated Depreciation	831,751	764,685
Total Fixed Assets	**380,246**	**401,175**
TOTAL ASSETS	**3,390,680**	**3,804,833**
LIABILITIES AND MEMBERS' EQUITY		
Current Liabilities		
Accounts Payable	188,631	650,047
Contract Liabilities	949,935	684,695
Accrued Payroll and Related Liabilities	78,895	23,924
Total Current Liabilities	**1,217,461**	**1,358,666**
MEMBERS' EQUITY		
Members' contributions	10,000	10,000
Members' distributions	-	(182,963)
Retained earnings	2,163,219	2,619,130
Total Members' Equity	**2,173,219**	**2,446,167**
EQUITY	**3,390,680**	**$ 3,804,833**

Fann Environmental, LLC
Statement of Cash Flows
March 2026

Cash Flows from Operating Activities	end of 2025	current	Year to Date
Net Income (Loss)			**$ 745,613**
Adjustment to reconcile net income to net cash			
Accounts Receivable			
Depreciation			27,338
Gain on Sale of Assets			(19,643)
(Increase) Decrease in:			
Accounts Receivable	967,096	1,887,275	(920,179)
Contract Assets	202,770	92,121	110,649
Prepaid Expense & Deposits	9,768	3,907	5,861
Increase (Decrease) in:			
Accounts Payable	282,806	188,631	(94,175)
Contract Liabilities	571,707	949,935	378,228
Accrued Expense	55,965	78,645	22,680
Net Cash provided by Operating Activities			**256,372**
Cash Flows from Investing Activities			
Purchases of Property and Equipment		12,000	(12,000)
Proceeds from Sales of Assets		60,000	60,000
Net Cash used by Investing Activities			**48,000**
Cash Flows from Financing Activities			
Member Distributions		-	-
Net Cash used by Financing Activities			**-**
Net Increase (Decrease) in Cash			**$ 304,372**
Cash at beginning of period			**722,759**
Cash at end of period			**1,027,131**
Net Increase (Decrease) in Cash			**$ 304,372**
Non-Cash Transactions:			
			$ -

Schedule A—Current Projects

Name of Organization	Fann Environmental, LLC				
Project Owner	City of Prescott		Project Name	Yavapai Hills #1 Lift Station Rehabilitation	
General Description of Project	Installation of new wet wells and associated equipment and site improvements including fencing and maintenance road.				
Project Cost	$4,969,003.75		Date Project	6/2024-6/2026	
Key Project Personnel	Project Manager	Project Superintendent	Safety Manager	Quality Control Manager	
Name	Paul Johnson	David Syme	Paul Johnson	David Syme	
Reference Contact Information (listing names indicates approval to contacting the names individuals as a reference)					
	Name	Title/Position	Organization	Telephone	Email
Owner	Gwen Rowitsch	Public Works Director	City of Prescott	(928) 777-1130	gwen.rowitsch@prescott-az.gov
Designer	Rob Bryant	Lead Engineer, PE	Water Works Engineers	(480) 744-0636	robb@wwengineers.com
Construction Manager	David Bradley	Capital Projects Manager	City of Prescott	(928) 777-1130	david.bradley@prescott-az.gov

Project Owner	Lake Havasu City		Project Name	Installation of UV Disinfection Assemblies at Mulberry WWTP	
General Description of Project	Remove existing assemblies, install City-purchased equipment, including all electrical and controls.				
Project Cost	$86,679.00		Date Project	5/2026-6/2026	
Key Project Personnel	Project Manager	Project Superintendent	Safety Manager	Quality Control Manager	
Name	Ryan Shy	Ryan Shy	Paul Johnson	Michael Young	
Reference Contact Information (listing names indicates approval to contacting the names individuals as a reference)					
	Name	Title/Position	Organization	Telephone	Email
Owner	Jason Hart	Capital Program Manager	Lake Havasu City	(928) 854-0789	hartj@lhcaz.gov
Designer	N/A - Equip Manufacturer				
Construction Manager	Keith Lueken	Wastewater Supervisor	Lake Havasu City	(928) 855-3999	luekenk@lhcaz.gov

Project Owner	City of Prescott		Project Name	Sundog WWTP Facility Repairs/Improvements	
General Description of Project	Repairs and improvements at WWTP including clarifier, new mechanical bar screen, motorized plug valve, wet well float switch				
Project Cost	$601,301.00		Date Project	6/2026-8/2026	
Key Project Personnel	Project Manager	Project Superintendent	Safety Manager	Quality Control Manager	
Name	Michael Young	Robert Kinkade	Paul Johnson	Michael Young	
Reference Contact Information (listing names indicates approval to contacting the names individuals as a reference)					
	Name	Title/Position	Organization	Telephone	Email
Owner	Scott Bell	WW Operations Supervisor	City of Prescott	(928) 777-1630	scott.bell@prescott-az.gov
Designer	N/A - Equip Manufacturer				
Construction Manager	Will Bodine	Wastewater Super	City of Prescott	(928) 710-6455	william.bodine@prescott-az.gov

Copyright© 2018 National Society of Professional Engineers, American Council of Engineering Companies,
and American Society of Civil Engineers. All rights reserved.

Schedule A—Current Projects Page 2

Name of Organization	Fann Environmental, LLC				
Project Owner	City of Sedona		Project Name	Secondary Clarifier Rehabilitation	
General Description of Project	Furnish and install 2 circular segmented scraper cage drive clarifiers for WWTP				
Project Cost	$748,744.00		Date Project	4/2026-8/2027 (long lead equipment)	
Key Project Personnel	Project Manager	Project Superintendent	Safety Manager	Quality Control Manager	
Name	Michael Young	David Syme	Paul Johnson	Michael Young	
Reference Contact Information (listing names indicates approval to contacting the names individuals as a reference)					
	Name	Title/Position	Organization	Telephone	Email
Owner	Roxanne Holland	Director of Wastewater	City of Sedona	(928) 203-5069	rholland@sedonaaz.gov
Designer	Adrian Williams	Engineer	WesTech Engineering	(801) 290-6403	awilliams@westechwater.com
Construction Manager	Dan Thurston	Wastewater PM/Eng	City of Sedona	(928) 203-5183	dthurston@sedonaaz.gov

Project Owner	Yavapai College		Project Name	Prescott Pines Well Water Supply Improvements	
General Description of Project	Furnish and install 50k gal bolted steel water storage tank and booster pump station to augment use of existing well				
Project Cost	$349,518.00		Date Project	7/2025-7/2027	
Key Project Personnel	Project Manager	Project Superintendent	Safety Manager	Quality Control Manager	
Name	Michael Young	TBD (Design Phase)	Paul Johnson	Michael Young	
Reference Contact Information (listing names indicates approval to contacting the names individuals as a reference)					
	Name	Title/Position	Organization	Telephone	Email
Owner	Ed Lacasse	Dir of Procurement	Yavapai College	(928) 776-2190	ed.lacasse@yc.edu
Designer					
Construction Manager	James Crockett	Facilities Director	Yavapai College	(928) 717-7641	james.crockett@yc.edu

Project Owner	Department of Veterans Affairs		Project Name	Install Elevators and Complete Space Buildout for B162 & B164	
General Description of Project	Install power to new elevator room, shunt trip for elevator, disconnects for cab lighting and controls, receptacles and switches				
Project Cost	$170,277.00		Date Project	4/2025-8/2026	
Key Project Personnel	Project Manager	Project Superintendent	Safety Manager	Quality Control Manager	
Name	Steve Myers	Steve Myers	Steve Myers	Steve Myers	
Reference Contact Information (listing names indicates approval to contacting the names individuals as a reference)					
	Name	Title/Position	Organization	Telephone	Email
Owner					
Designer			AESUS Design Group		
Construction Manager	John Crofoot	Project Superintendent	The Povolny Group	(509) 991-8538	jcrofoot@povolnygroup.com

Copyright© 2018 National Society of Professional Engineers, American Council of Engineering Companies, and American Society of Civil Engineers. All rights reserved.

Schedule B—Previous Experience with Similar Projects

Name of Organization	Fann Environmental, LLC				
Project Owner	Fort Mohave Tribal Utility Authority		Project Name	Clarifier Scum Baffle Replacement	
General Description of Project	Remove existing aluminum scum baffle and replace with new owner-provided equipment.				
Project Cost	$56,000.00		Date Project	6/2025	
Key Project Personnel	Project Manager	Project Superintendent	Safety Manager	Quality Control Manager	
Name	Michael Young	Robert Kinkade	Robert Kinkade	Robert Kinkade	
Reference Contact Information (listing names indicates approval to contacting the names individuals as a reference)					
	Name	Title/Position	Organization	Telephone	Email
Owner	John DeOcampo	Operations Manager	Fort Mohave TUA	(928) 768-1500	jdeocampo@fmtua.com
Designer	N/A Equip Manufacturer				
Construction Manager	Same as Owner				

Project Owner	Town of Prescott Valley		Project Name	Village Way Lift Station	
General Description of Project	Development of lift station site to include site improvements, wet well, vaults, pumps, grinder, mech & electrical systems				
Project Cost	$2,722,262.62		Date Project	10/2023-4/2025	
Key Project Personnel	Project Manager	Project Superintendent	Safety Manager	Quality Control Manager	
Name	Paul Johnson	David Syme	Paul Johnson	David Syme	
Reference Contact Information (listing names indicates approval to contacting the names individuals as a reference)					
	Name	Title/Position	Organization	Telephone	Email
Owner	Lisa Vaughan	Engineer, Utilities	Town of Prescott Valley	(928) 759-5506	lvaughan@prescottvalley-az.gov
Designer	Stefan Gustafsson	Asst Project Manager	Colliers Eng & Design	(602) 490-0535	stefan.gustafsson@collierseng.com
Construction Manager	Ed Shipley	Project Manager	Cavan Companies	(602) 490-0535	eshipley@cavancompanies.com

Project Owner	City of Cottonwood		Project Name	Rebuild Sand Filters with Skimmers	
General Description of Project	Rebuild of two 16' x 30' ABF sand filters with 8" cells with a skimmer on each at Cottonwood WWTP				
Project Cost	$451,649.00		Date Project	11/2023	
Key Project Personnel	Project Manager	Project Superintendent	Safety Manager	Quality Control Manager	
Name	Michael Young	Michael Young	Michael Young	Michael Young	
Reference Contact Information (listing names indicates approval to contacting the names individuals as a reference)					
	Name	Title/Position	Organization	Telephone	Email
Owner	Russell Freye	Utility Engineer	City of Cottonwood	(928) 340-2735	rfreye@cottonwoodaz.gov
Designer	Shawn Butterfield	Project Manager	Aqua-Aerobic Systems	(815) 639-4490	sbutterfield@aqua-aerobic.com
Construction Manager	Mathew Westcott	Wastewater Supervisor	City of Cottonwood	(928) 340-2196	mwestcott@cottonwoodaz.gov

Copyright© 2018 National Society of Professional Engineers, American Council of Engineering Companies, and American Society of Civil Engineers. All rights reserved.

Schedule B—Previous Experience with Similar Projects

Name of Organization	Fann Environmental, LLC				
Project Owner	City of Prescott		Project Name	Traveling Bridge Sand Filter Rehabilitation	
General Description of Project	Rebuild of underdrains of two 16' x 66' ABF sand filters with 12" cells and 22" media at Sundog WWTP				
Project Cost	$633,517.00		Date Project	2/2024-8/2024	
Key Project Personnel	Project Manager	Project Superintendent	Safety Manager	Quality Control Manager	
Name	Michael Young	Michael Young	Michael Young	Michael Young	
Reference Contact Information (listing names indicates approval to contacting the names individuals as a reference)					
	Name	Title/Position	Organization	Telephone	Email
Owner	Gwen Rowitsch	Public Works Director	City of Prescott	(928) 777-1130	gwen.rowitsch@prescott-az.gov
Designer	Shawn Butterfield	Project Manager	Aqua-Aerobic Systems	(815) 639-4490	sbutterfield@aqua-aerobic.com
Construction Manager	Scott Gregorio (Retired)	Wastewater Super	City of Prescott		

Project Owner	Town of Clarkdale		Project Name	Backwash Lift Station Replacement	
General Description of Project	Install fiberglass lift station and 6' wet well w/ pumps, instruments/controls/electrical, pipe and appurtenance to tie in to existing				
Project Cost	$205,882.00		Date Project	11/2023	
Key Project Personnel	Project Manager	Project Superintendent	Safety Manager	Quality Control Manager	
Name	Michael Young	David Syme / Ryan Shy (Elect)	Paul Johnson	David Syme	
Reference Contact Information (listing names indicates approval to contacting the names individuals as a reference)					
	Name	Title/Position	Organization	Telephone	Email
Owner	Lisa Waldschmidt	Water Resource Manager	Town of Clarkdale	(928) 202-2152	lisawaldschmidt@clarkdale.az.gov
Designer	N/A				
Construction Manager	N/A				

Project Owner			Project Name		
General Description of Project					
Project Cost			Date Project		
Key Project Personnel	Project Manager	Project Superintendent	Safety Manager	Quality Control Manager	
Name					
Reference Contact Information (listing names indicates approval to contacting the names individuals as a reference)					
	Name	Title/Position	Organization	Telephone	Email
Owner					
Designer					
Construction Manager					

Copyright© 2018 National Society of Professional Engineers, American Council of Engineering Companies, and American Society of Civil Engineers. All rights reserved.

Schedule C—Key Individuals

Project Manager			
Name of individual		Paul Johnson	
Years of experience as project manager		30+	
Years of experience with this organization		6.5	
Number of similar projects as project manager		8	
Number of similar projects in other positions			
Current Project Assignments			
Name of assignment		Percent of time used for this project	Estimated project completion date
Yavapai Hills #1 Lift Station Rehab		10%	6/2026
Reference Contact Information (listing names indicates approval to contact named individuals as a reference)			
Name	Scott McClinton	Name	Jesse Roybal
Title/Position	Capital Projects Manager	Title/Position	Water Division Supervisor
Organization	City of Prescott	Organization	Mohave County
Telephone	(928) 777-1130	Telephone	(928) 757- 0910
Email	scott.mcclinton@prescott-az.gov	Email	roybaj@mohave.gov
Project	Water Production Facility	Project	GVID Well 2/5 Construction
Candidate's role on project	Project Manager	Candidate's role on project	Project Manager
Project Superintendent			
Name of individual		David Syme	
Years of experience as project superintendent		30+	
Years of experience with this organization		7.5	
Number of similar projects as project superintendent		See years of experience, difficult to quantify	
Number of similar projects in other positions		See years of experience	
Current Project Assignments			
Name of assignment		Percent of time used for this project	Estimated project completion date
Yavapai Hills #1 Lift Station Rehab		5%	6/2026
Prescott Pines Well Water Supply Improvements		10%	7/2027
Reference Contact Information (listing names indicates approval to contact named individuals as a reference)			
Name	David Bradley	Name	Scott McClinton
Title/Position	Capital Projects Manager	Title/Position	Capital Projects Manager
Organization	City of Prescott	Organization	City of Prescott
Telephone	(928) 777-1130	Telephone	(928) 777-1130
Email	david.bradley@prescott-az.gov	Email	scott.mcclinton@prescott-az.gov
Project	Yavapai Hills LS#1 & Zone 7 Improvements	Project	Water Production Facility & Interm. Pump Stn.
Candidate's role on project	Project Superintendent	Candidate's role on project	Project Superintendent

EJCDC® C-451, Qualifications Statement—Schedule C—Key Individuals.
Copyright© 2018 National Society of Professional Engineers, American Council of Engineering Companies, and American Society of Civil Engineers. All rights reserved.

Safety Manager			
Name of individual		Paul Johnson	
Years of experience as ~~project~~ manager (safety)		30+	
Years of experience with this organization		6.5	
Number of similar projects as ~~project~~ manager (safety)		Mr. Johnson is safety manager on nearly all FE projects	
Number of similar projects in other positions			
Current Project Assignments			
Name of assignment		Percent of time used for this project	Estimated project completion date
Occasional safety site visits for all projects			
Reference Contact Information (listing names indicates approval to contact named individuals as a reference)			
Name	See references under PM	Name	See references under PM
Title/Position		Title/Position	
Organization		Organization	
Telephone		Telephone	
Email		Email	
Project		Project	
Candidate's role on project		Candidate's role on project	

Quality Control Manager			
Name of individual		Michael Young	
Years of experience as ~~project superintendent~~ (QC)		22	
Years of experience with this organization		22 (45+ years experience in water/wastewater)	
Number of similar projects as ~~project superintendent~~ (QC)		As president of FE, Mike is involved in all projects to ensure they meet client and company standards	
Number of similar projects in other positions			
Current Project Assignments			
Name of assignment		Percent of time used for this project	Estimated project completion date
Sundog WWTP Facility Repairs/Improvements		5%	8/2026
Prescott Pines Water Well Improvements		10%	7/2027
Reference Contact Information (listing names indicates approval to contact named individuals as a reference)			
Name	Matthew Wood	Name	Scott McClinton
Title/Position	Utility Engineer	Title/Position	Capital Projects Manager
Organization	Page Utility Enterprises	Organization	City of Prescott
Telephone	(928) 645-2419	Telephone	(928) 777-1130
Email	mwood@pageutility.com	Email	scott.mcclinton@prescott-az.gov
Project	Multiple JOC projects over past 15 yrs	Project	Water Production Fac & Inter. Pump Stn.
Candidate's role on project	Project Manager/QC	Candidate's role on project	Project Executive

Copyright© 2018 National Society of Professional Engineers, American Council of Engineering Companies, and American Society of Civil Engineers. All rights reserved.

Michael S. Young
President

Summary of Experience

Mr. Young has 50 years of professional experience specializing in various aspects of water treatment and distribution, wastewater treatment and collection, effluent reuse and delivery methods hazardous materials and landfills. Mr. Young has extensive knowledge in the design, construction, operation and management of both water and wastewater facilities, development of capital improvement projects, and management of municipal utilities.

As the president of Fann Environmental, Mike is responsible for day-to-day business management, financial oversight, public relations and marketing. He provides hands-on project management, consulting, system troubleshooting, operator training, and new system start-up and commissioning.

Certifications

- Grade Four Water Distribution Operator Certification
- Grade Four Water Treatment Operator Certification
- Grade One Wastewater Treatment Operator Certification
- Grade Two Wastewater Collection Operator Certification

Education and Training

- Pump and Well Design Studies, University of California at Davis
- Water and Wastewater Utilities Management, Michigan State University
- Numerous community college courses in water and wastewater
- Ongoing continuing education and professional development training for Operator Certification
- Numerous seminars in supervisory, management, and computer skills

Professional Experience

2003 - Present · Fann Environmental, LLC

President, Project Manager

Relevant Projects

- CMAR City of Prescott Water Production and Intermediate Pump Stations
- Design-Build City of Prescott Chino Production Well Rehabilitation Program
- City of Page Job Order Contract Projects
- Various Navajo Tribal Utility Authority Projects
- Arizona Water Company Water Treatment Systems throughout Arizona

Consultant

- Municipal projects
- Water and wastewater system troubleshooting
- Overall utilities management
- ADEQ systems evaluations and technical assistance

Michael S. Young Professional Experience continued

1986 - 2003 · City of Prescott, Prescott AZ

Water Plant Operator

Water Production Foreman

Utilities Superintendent - Water and Wastewater Collections

Water Production Superintendent

As the Utilities and Water Superintendent, Mike was responsible for the entire water system that included 5 water production wells, one effluent recovery well, eight monitoring wells, 35 booster stations, 30 storage reservoirs and tanks, pumping facilities from fractional to 1000 horsepower, Chino Valley Well Field and high pressure booster station, over 80 pressure reducing stations, hundreds of miles of distribution and transmission mains from 2-inch to 36-inch. He was also involved in all water-related capital improvement projects, from the construction of storage reservoirs to design, build and operation of booster facilities.

1985 – 1988 · Hydro-Technology, Prescott AZ

Owner/Consultant

Water Production Foreman

As a water consulting business owner, Mike performed consulting services for numerous engineering firms and various private and public community water systems throughout Arizona. He participated in the design of a new production well facility for the City of Flagstaff and also provided over eight years of service to the City of Williams for troubleshooting their surface water treatment plant. He also provided consulting services for the Town of Show Low.

1978 - 1982 · Montecito Water District, Montecito CA

Water Treatment Supervisor

Water Operations and Maintenance Superintendent

As the water operations and maintenance superintendent, Mike was responsible for the operation and maintenance of the water system and was directly involved in a very extensive ground water basin study. During this time, pump testing was performed on over 25 wells with the drawdown and revolver being monitored closely on observation wells within the surrounding areas. During his tenure he attended the University of California at Davis where he studied well and pump design and completed a course through Michigan State University on supervision and management in the water/wastewater industry.

1975 – 1978 · Cachuma Operations and Maintenance Board, Santa Barbara CA

System Operator

As the system operator, Mike was responsible for controlling water flows up to 75 cos through the Tecolate Tunnel to maintain reservoir levels along the south coast from Goleta to Carpinteria, California. His responsibilities included coordinating with each water district and community starting with Goleta, Santa Barbara, Montecito, Summerland and Carpenter to meet their anticipated water demands. Other responsibilities included water quality sampling and field analysis to determine the level of the highest quality lake water and adjust the intake accordingly.

Paul Johnson

Operations Direct/Project Manager/Safety Manager

Summary of Experience

Mr. Johnson has over 30 years of professional experience in construction management and field operations. Paul is responsible for sourcing, hiring and scheduling of personnel. He collaborates with the superintendents, owners, subcontractors and suppliers to ensure that projects are being completed on time and within budget. Mr. Johnson maintains the company safety program working closely with employees and subcontractors to keep job sites in compliance and promoting a healthy safety culture. He is involved in estimating and bidding on negotiated and hard bid projects as well. Paul also manages the documentation of all of our current projects' progress on Procore construction software.

Certifications and Accreditations

- ASHE Health Care Construction Certificate
- OSHA 30
- University of Minnesota Storm Water Pollution Prevention Program (SWPPP)
- Procore Administration
- Dale Carnegie's Manager's Guide to Sustainable Employee Engagement completed

Professional Experience

2019 - Present · Fann Environmental, LLC

Project Manager and Operations Director

Relevant Projects

- Yavapai Hills Lift Station #1 Rehabilitation
- Village Way Lift Station
- CMAR City of Prescott Water Production Facility
- Ash Fork Water Infrastructure Improvements
- Arizona Water Company Mogollon Well No 3 Arsenic Treatment Facility
- Oak Creek Water District Arsenic Removal Systems and Tank Repairs
- City of Prescott Chino Production Well 3 Rehab
- City of Prescott Zone 56 Tank and Zone 7 Improvements

2014 - 2019 · Midwest Construction Group, Fargo ND

Director of Field Operations/PM/Safety Director

As Director of Field Operations, Paul was responsible for all aspects of the day to day operations including creating and maintaining construction budgets with a scope of up to $17 million. He sourced and hired superintendents and field personnel, trained and mentored new hires and assisted with the setting of goals/expectations and annual performance reviews. As the Safety Director, Paul maintained an effective safety program with a <.75 EMR for the division working closely with employees and subcontractors to keep job sites in compliance and promote a healthy safety culture. As a Project Manager, Paul participated in estimating and bidding negotiated and hard bid projects, managed projects utilizing Procore software, and created and in-house scope exhibits for contracts using AIA software.

Paul Johnson Professional Experience continued

2002 - 2013 · Nor-Son Inc., Baxter MN

Superintendent / Construction Manager

Paul had a full range of responsibilities associated with large commercial construction project management in this position. He field managed projects for Merit Health Care System (now Sanford Health) including being the Construction Manager for a $65 million addition on a hospital campus in downtown Fargo, ND. The project included a new Heart Center with a 4-suite cardiac catheter unit with emergency OR suite, remodeling and expansion of the Roger Maris Cancer Center, and a new parking structure. Paul also managed the remodeling of rural hospitals and clinics, and Hotel/Casino refacing and remodels in MN.

1999 – 2002 · Triebwasser, Helenske and Associates (now Helenske Design Group), Fargo ND

Construction Manager

As Construction Manager, Paul oversaw various projects mostly for the Minnesota State Colleges and University System at the Thief River Falls MN campus. Projects were phased, multi-million dollar contracts. His responsibilities included estimating for architectural staff, designing development budgets, marketing, and public relations.

1991-1999 · Stamson and Blair, Inc., Grand Rapids MN

Project Superintendent

This was Paul's first experience with commercial construction and full time Superintendent duties. He was responsible for daily jobsite operations and implementation of plans and specifications, coordination and scheduling of crews and subcontractors, supplies and equipment, and stringent quality control. He also managed communications between owners, architects, and engineers.

David "Bim" Syme
General Superintendent

Summary of Experience

Mr. Syme has also been working in the industry for over 40 years specializing in underground utilities, roadway construction, and project development, the last five years with Fann Environmental. Before joining FE, Bim had taken part in over 300 public and private projects ranging from $20,000 to $16 million plus throughout Arizona, Utah, and Wyoming. Bim is responsible for overseeing the operations of active projects, developing and overseeing the crews, managing the materials and equipment needed to complete projects and directing crews to keep projects within scope, time frame, and budget. Bim is well-respected within the construction community and has an extensive network of contacts in the industry and related utilities.

Certifications and Training

- OSHA 10
- NUCA Competent Person
- Competent Person Excavation, Trenching, Confined Space
- Storm Water Pollution Prevention Program (SWPPP)
- Forklift and Aerial Work Platform Training
- First Aid/CPR

Professional Experience

2019 - Present · Fann Environmental, LLC

General Superintendent

Relevant Projects

- Yavapai Hills #1 Lift Station Rehabilitation
- CMAR City of Prescott Intermediate Pump Stations
- Village Way Lift Station
- City of Prescott Zone 56 Tank and Zone 7 Improvements
- Arizona Water Company Mogollon Well No 3 Arsenic Treatment Facility

2013 - 2019 & 1984 - 2011 · Johansen Construction Inc., Mt. Pleasant UT

Arizona Branch Manager/Project Manager

- Specialized in underground pipeline construction for private and public contracts
- Worked over 300 jobs ranging from $20,000 to $16 million+ in Arizona, Utah, Wyoming
- Business development through competitive bidding, conducting weekly oral progress meetings with owners and employees/subcontractors, creating and managing production schedules for job projections, maintaining records of equipment use, safety training, weekly safety meetings, material costs, billing and labor schedules.

2011 - 2013 · West African Heavy Equipment Ltd / Bodie Machine and Metal Works LLC, Ghana, Africa

Operations Manager

Originally hired to manage rental of heavy machinery, but role transitioned to procuring, establishing and leading the company's overall gold mining operation including managing staff of over 135 Ghanaians and Americans, managing use and maintenance of 50 pieces of heavy equipment, overseeing product refinement and security and interacting and negotiating with local chiefs and commissioners.

Robert Kinkade

Ryan Shy
Electrical Department Manager/Superintendent

Summary of Experience

Mr. Shy has nearly 25 years of experience in the construction field. Ryan successfully completed the Arizona Statutes and Rules Training Course and Exam for Contractor Licensing and AZ CR-11 Electrical Licensing Exam. He began as a laborer and quickly worked his way up to journeyman and administrative level positions. Ryan has supervised both piping and electrical work as well as the work of subcontractors on Fann Environmental projects. His projects are consistently completed on time and within budget. Ryan has worked extensively with Arizona Public Service in coordination of providing new electrical service to several City of Prescott treatment facilities. He is often the first person clients call when they have an electrical emergency because they know he will be responsive and be able to make the repairs needed to get them back on track.

Certifications and Accreditations

- Arizona Registrar of Contractors CR-11 Contractors License
- 40 Hour EM385 Hazard Recognition
- Competent Person Excavation, Confined Space
- Forklift and Aerial Operator Safety
- MSHA 8 hour

Education

- Independent Electrical Contractors Association 4-year, 8,000 hour Apprenticeship Program

Professional Experience

2018 – Present · Fann Environmental, LLC

Electrical Department Manager Superintendent

Relevant Projects

- City of Prescott Water Production Facility and Intermediate Pump Stations
- Oak Creek Water District Arsenic Removal Systems and Tank Repairs
- City of Prescott Airport Well No 5 Improvements
- City of Prescott Zone 16 Tank, Pump Station, and Water Main
- Arizona Water Company Santiago Trail Nitrate Removal, Booster Station and Storage Tank

2015 – 2018 · LPC Construction, Yuma AZ

Project Superintendent

Duties included Estimating projects, reviewing submittals, plans, and specifications, building project schedules and ensuring subcontractors are adhering to plans, specifications and schedules, coordinating materials and subcontractor work, conducting weekly progress and safety meetings.

1999-2015 · Westmoor Electric, Yuma AZ

Laborer through Project Manager

Duties included installing conduit per plans, specifications and national electrical code, pulling and terminating wire for complete electrical system, laying out and coordinating electrical systems with other trades, operating backhoe, forklift, scissor lifts and boom lifts, overseeing electrical apprentices and laborers, communicating with engineers and owners on project issues.

FANN Environmental, LLC
One Stop Environmental Solutions
6708 Corsair Ave., Suite A • Prescott, AZ 86301 • Phone: 928-778-5335 • Fax: 928-778-5870 • ROC-A-206365 • ROC B-249529

List of Proposed Subcontractors

J Co Contracting LLC PO Box 3787 Prescott AZ 86302 AZROC 239181 KB-1	Concrete
Field Lining Systems Inc 439 S 3rd Avenue Avondale AZ 85323 AZROC 090068 CR-5	Liner Installation
Mammoth Tech LLC 1020 M Main St Cottonwood AZ 86326 AZROC 342200	Welding/Fabrication
Granite Basin Engineering 1981 Commerce Center Cir Prescott AZ 86301	Survey
CMT Technical Services 2355 N Steves Blvd Ste B Flagstaff AZ 86004	Materials Testing & Special Inspections

FANN Environmental, LLC
One Stop Environmental Solutions
6708 Corsair Ave., Suite A • Prescott, AZ 86301 • Phone: 928-778-5335 • Fax: 928-778-5870 • ROC-A-206365 • ROC B-249529

LLC Resolution of Signing Authority

WHEREAS, the Company is determined to grant signing and authority to certain persons described hereunder.

RESOLVED, that the Members are hereby authorized and approved to authorize and empower the following individual to make, execute, endorse and deliver in the name of and on behalf of the company, but shall not be limited to, any and all written instruments, agreements, documents, execution of deeds, powers of attorney, transfers, assignments, contracts, obligations, certificates, banking agreements and other instruments of whatever nature entered into by this Company.

Name: Michael S Young

Position/Title: Operating Member

Telephone Number: 928-713-9265

Email Address: mikeyoung@fannenvironmental.com

Signature: _____ 4/16/2025

Name: Michael W Fann

Position/Title: Majority Member

Telephone Number: 928-713-3286

Email Address: mfann@fanncontracting.com

Signature: _____ 4/16/2025

Continuation of *LLC Resolution of Signing Authority*

The undersigned hereby certify that they are the members of Fann Environmental, LLC on the date signed and that they agree to the resolution above:

Michael W. Fann _____ 4/16/2025

Michael S. Young, Sr. _____ 4/16/2025

Laurie L. Young _____ 05/07/25

Linda O'Brien _____ _____

Dan Lee _____ _____

Gary D. Steinmetz _____ _____

Continuation of *LLC Resolution of Signing Authority*

The undersigned hereby certify that they are the members of Fann Environmental, LLC on the date signed and that they agree to the resolution above:

Michael W. Fann _____ 4/16/2025

Michael S. Young, Sr. _____ 4/16/2025

Laurie L. Young _____ _____

Linda O'Brien _____ 5/21/2025

Dan Lee _____ 5/21/2025

Gary D. Steinmetz _____ 4-14-25

Arizona Business Center

Login Register

Business Search

Home › Business Search › Business Information

Back

Business Name FANN ENVIRONMENTAL, LLC	Business Type Domestic Limited Liability Company	Business ID L11594778	Business Status Active
State of Formation/Jurisdiction	Principal Office Address 6708 Corsair Avenue, Suite A, PRESCOTT, AZ, Yavapai, 86301, United States	Mailing Address -	Reason for Status In Good Standing
Date of Formation 10/22/2004	Status Date -	Management Structure Member Managed	
Period of Duration Perpetual			

Character of Business

-

Statutory Agent Information

Agent Type Individual	Agent Name LINDA O'BRIEN	Status Active	
Physical Address Attention -	Statutory Agent Address (Physical Address) 6708 Corsair Avenue, Suite A, PRESCOTT, AZ, Yavapai, 86301, United States	Mailing Address Attention -	Mailing Address 6708 Corsair Avenue, Suite A, PRESCOTT, AZ, Yavapai, 86301, United States
Effective Date -			

Principals Information (6)

Title	Principal Type	Name	Attention	Address	Mailing Address	Date Taking Office	Term of Office
Member	Individual	GARY D STEINMETZ	-	PO BOX 1925, CHINO VALLEY, AZ, 86314, United States	-	11/2011	-
Member	Individual	LINDA OBRIEN	-	PO BOX 3958, PRESCOTT, AZ, 86302, United States	-	10/2004	-
Member	Individual	DAN LEE	-	PO BOX 3958, PRESCOTT, AZ, 86302, United States	-	10/2004	-
Member	Individual	MICHAEL W FANN	-	PO BOX 4356, PRESCOTT, AZ, 86302, United States	-	10/2004	-
Member	Individual	LAURIE L YOUNG	-	13398 E REMINGTON RD, PRESCOTT VALLEY, AZ, 86314, United States	-	10/2004	-
Member	Individual	MICHAEL S YOUNG SR	-	13398 E REMINGTON RD, PRESCOTT VALLEY, AZ, 86314, United States	-	10/2004	-

Items per page: 10 1 – 6 of 6

Filing History | Name History | Stat. Agent History | Service History | Restructuring History | Microfilm History

Filing Number	Filing Date/Time	Effective Date	Filing Type	Filing Status	View Document
25011508382680	02/03/2025 11:53 AM	01/13/2025	Statement of Change - LLC Principal Address/Stat Agent	Approved	
03663301	11/04/2011 12:00 AM	11/07/2011	Articles of Amendment - LLC	Approved	
01083338	12/15/2004 12:00 AM	12/18/2004	Affidavit of Publication	Approved	
01046119	10/22/2004 12:00 AM	10/25/2004	Articles of Organization	Approved	

-------- IMPORTANT NOTICE --------
YOU MUST:

1. REPORT DISASSOCIATION OF QUALIFYING PARTY **IN WRITING** WITHIN 15 DAYS. [SEE A.R.S. § 32-1154(A)(18)]
2. REPORT A CHANGE OF ADDRESS **IN WRITING** WITHIN 30 DAYS. [SEE A.R.S § 32-1122(8)(1)]
3. REPORT ANY TRANSFER OF OWNERSHIP OF 25% OR MORE IMMEDIATELY [SEE A.R.S. § 32-1151.01]
4. REPORT ANY CHANGE IN LEGAL ENTITY, SUCH AS ANY CHANGE IN OWNERSHIP IN A SOLE PROPRIETORSHIP OR CHANGE OF A PARTNER IN A PARTNERSHIP OR THE CREATION OF A NEW CORPORATE ENTITY [SEE A.R.S § 32-1124(8)(F) § RULE R-4-9-110]

THIS IS YOUR IDENTIFICATION CARD

Licensee: **Fann Environmental LLC**

6708 Corsair Avenue, Suite A Prescott, AZ 86301, Prescott, AZ 86301

License No.: **ROC 206365**
Class: **A General Engineering**
License Effective Through: **2027-04-30**

ROC 206365

TOM COLE, DIRECTOR

State of Arizona Registrar of Contractors

Visit our license listing on the Registrar of Contractors Contractor Search using the QR Code to the right.

ROC 206365

STATE OF ARIZONA

License No. ROC 206365

Office of the
Registrar of Contractors

This is to certify that:

Fann Environmental LLC

DBA (if any)

Having been shown to possess all the necessary qualifications, and having complied with all the requirements of the law is by order of the Registrar of Contractors duly licensed and admitted to engage in and pursue the business of

A General Engineering

Contractor in the State of Arizona. Given my hand and the seal of the Registrar of Contractors in my office, City of Phoenix, on 2005-04-25

ROC 206365

Arizona Registrar of Contractors • 1931 •

TOM COLE, DIRECTOR,
ARIZONA REGISTRAR OF CONTRACTORS

-------- IMPORTANT NOTICE --------
YOU MUST:

1. REPORT DISASSOCIATION OF QUALIFYING PARTY **IN WRITING** WITHIN 15 DAYS. [SEE A.R.S. § 32-1154(A)(18)]
2. REPORT A CHANGE OF ADDRESS **IN WRITING** WITHIN 30 DAYS. [SEE A.R.S § 32-1122(8)(1)]
3. REPORT ANY TRANSFER OF OWNERSHIP OF 25% OR MORE IMMEDIATELY [SEE A.R.S. § 32-1151.01]
4. REPORT ANY CHANGE IN LEGAL ENTITY, SUCH AS ANY CHANGE IN OWNERSHIP IN A SOLE PROPRIETORSHIP OR CHANGE OF A PARTNER IN A PARTNERSHIP OR THE CREATION OF A NEW CORPORATE ENTITY [SEE A.R.S § 32-1124(8)(F) § RULE R-4-9-110]

THIS IS YOUR IDENTIFICATION CARD

Licensee: **Fann Environmental LLC**

6708 Corsair Ave Ste A, Prescott, AZ 86301

License No.: **ROC 249529**
Class: **B-1 General Commercial Contractor**
License Effective Through: **2026-09-30**

ROC 249529

TOM COLE, DIRECTOR

State of Arizona Registrar of Contractors

Visit our license listing on the Registrar of Contractors Contractor Search using the QR Code to the right.

ROC 249529

STATE OF ARIZONA

License No. ROC 249529

Office of the
Registrar of Contractors

This is to certify that:

Fann Environmental LLC

DBA (if any)

Having been shown to possess all the necessary qualifications, and having complied with all the requirements of the law is by order of the Registrar of Contractors duly licensed and admitted to engage in and pursue the business of

B-1 General Commercial Contractor

Contractor in the State of Arizona. Given my hand and the seal of the Registrar of Contractors in my office, City of Phoenix, on 2008-09-26

ROC 249529

Arizona Registrar of Contractors • 1931 •

TOM COLE, DIRECTOR,
ARIZONA REGISTRAR OF CONTRACTORS

-------- IMPORTANT NOTICE --------
YOU MUST:

1. REPORT DISASSOCIATION OF QUALIFYING PARTY **IN WRITING** WITHIN 15 DAYS. [SEE A.R.S. § 32-1154(A)(18)]
2. REPORT A CHANGE OF ADDRESS **IN WRITING** WITHIN 30 DAYS. [SEE A.R.S § 32-1122(8)(1)]
3. REPORT ANY TRANSFER OF OWNERSHIP OF 25% OR MORE IMMEDIATELY [SEE A.R.S. § 32-1151.01]
4. REPORT ANY CHANGE IN LEGAL ENTITY, SUCH AS ANY CHANGE IN OWNERSHIP IN A SOLE PROPRIETORSHIP OR CHANGE OF A PARTNER IN A PARTNERSHIP OR THE CREATION OF A NEW CORPORATE ENTITY [SEE A.R.S § 32-1124(8)(F) § RULE R-4-9-110]

THIS IS YOUR IDENTIFICATION CARD

Licensee: **Fann Environmental LLC**

6708 Corsair Avenue Suite A, Prescott, AZ 86301

License No.: **ROC 276357**
Class: **CR-11 Electrical**
License Effective Through: **2027-12-31**

ROC 276357

TOM COLE, DIRECTOR

State of Arizona Registrar of Contractors

Visit our license listing on the Registrar of Contractors Contractor Search using the QR Code to the right.

ROC 276357

STATE OF ARIZONA

License No. ROC 276357

Office of the
Registrar of Contractors

This is to certify that:

Fann Environmental LLC

DBA (if any)

Having been shown to possess all the necessary qualifications, and having complied with all the requirements of the law is by order of the Registrar of Contractors duly licensed and admitted to engage in and pursue the business of

CR-11 Electrical

Contractor in the State of Arizona. Given my hand and the seal of the Registrar of Contractors in my office, City of Phoenix, on 2011-12-26

ROC 276357

Arizona Registrar of Contractors • 1931 •

TOM COLE, DIRECTOR,
ARIZONA REGISTRAR OF CONTRACTORS

USDA
Form RD 400-6
(Rev. 12-09)

Form Approved
OMB No. 0575-0018

COMPLIANCE STATEMENT

This statement relates to a proposed contract with Town of Jerome

(Name of borrower or grantee)

who expects to finance the contract with assistance from either the Rural Housing Service (RHS), Rural Business-Cooperative Service (RBS), or the Rural Utilities Service (RUS) or their successor agencies, United States Department of Agriculture (whether by a loan, grant, loan insurance, guarantee, or other form of financial assistance). I am the undersigned bidder or prospective contractor, I represent that:

1. I ☒ have ☐ have not, participated in a previous contract or subcontract subject to Executive 11246 (regarding equal employment opportunity) or a preceding similar Executive Order.

2. If I have participated in such a contract or subcontract, I ☒ have, ☐ have not, filed all compliance reports that have been required to file in connection with the contract or subcontract.

☒ If the proposed contract is for $50,000 or more: or ☐ if the proposed nonconstruction contract is for $50,000 or more and I have 50 or more employees, I also represent that:

3. I ☒ have, ☐ have not previously had contracts subject to the written affirmative action programs requirements of the Secretary of Labor.

4. If I have participated in such a contract or subcontract, ☒ I have, ☐ have not developed and placed on file at each establishment affirmative action programs as required by the rules and regulations of the Secretary of Labor.

I understand that if I have failed to file any compliance reports that have been required of me, I am not eligible and will not be eligible to have my bid considered or to enter into the proposed contract unless and until I make an arrangement regarding such reports that is satisfactory to either the RHS, RBS or RUS, or to the office where the reports are required to be filed.

I also certify that I do not maintain or provide for my employees any segregated facilities at any of my establishments, and that I do not permit my employees to perform their services at any location, under my control, where segregated facilities are maintained. I certify further that I will not maintain or provide for my employees any segregated facilities at any of my establishments, and that I will not permit my employees to perform their services at any location, under my control, where segregated facilities are maintained. I agree that a breach of this certification is a violation of the Equal Opportunity clause in my contract. As used in this certification, the term "segregated facilities" means any waiting rooms, work areas, restrooms and wash rooms, restaurants and other eating areas time clocks, locker rooms and other storage or dressing areas, parking lots, drinking fountains, recreation or entertainment areas, transportation, and housing facilities provided for employees which are segregated by explicit directive or are in fact segregated on the basis of race, creed, color, or national origin, because of habit, local custom, or otherwise. I further agree that (except where I have obtained identical certifications for proposed subcontractors for specific time periods) I will obtain identical certifications from proposed subcontractors prior to the award of subcontracts exceeding $10,000 which are not exempt from the provisions of the Equal Opportunity clause; that I will retain such certifications in my files; and that I will forward the following notice to such proposed subcontractors (except where the proposed subcontractors have submitted identical certifications for specific time periods):

According to the Paperwork Reduction Act of 1995, an agency may not conduct or sponsor, and a person is not required to respond to a collection of information unless it displays the valid OMB control number. The valid OMB control number for this information collection is 0575-0018. The time required to complete this information collection is estimated to average 10 minutes per response, including the time for reviewing instructions, searching existing data sources, gathering and maintaining the data needed, and completing and reviewing the collection of information.

NOTICE TO PROSPECTIVE SUBCONTRACTORS OF REQUIREMENTS FOR CERTIFICATIONS OF NON-SEGREGATED FACILITIES

A certification of Nonsegregated Facilities, as required by the May 9, 1967, order (32F.R. 7439, May 19, 1967) on Elimination of Segregated Facilities, by the Secretary of Labor, must be submitted prior to the award of a subcontract exceeding $ 10,000 which is not exempt from the provisions of the Equal Opportunity clause. The certification may be submitted either for each subcontract or for all subcontracts during a period (i.e., quarterly, semiannually, or annually).

NOTE: The penalty for making false statements in offers is prescribed in 18 U.S.C. 1001.

Date 06/03/2026

(Signature of Bidder or Prospective Contractor)

6708 Corsair Ave Ste A, Prescott, AZ 86301

Address (including Zip Code)

This form is available electronically.

Form Approved – OMB No. 0505
Expiration Date: 04/30/2022

Certification Regarding Debarment, Suspension, Ineligibility and Voluntary Exclusion Lower Tier Covered Transactions

AD-1048

The following statement is made in accordance with the Privacy Act of 1974 (5 U.S.C. § 552a, as amended). This certification is required by the regulations implementing Executive Order 12549, Debarment and Suspension, and 2 C.F.R. §§ 180.300, 180.335, Participants' responsibilities. The regulations were amended and published on August 31, 2005, in 70 Fed. Reg. 51865-51880. Copies of the regulations may be obtained by contacting the Department of Agriculture agency offering the proposed covered transaction.

According to the Paperwork Reduction Act of 1995 an agency may not conduct or sponsor, and a person is not required to respond to a collection of information unless it displays a valid OMB control number. The valid OMB control number for this information collection is 0505-0027. The time required to complete this information collection is estimated to average 15 minutes per response, including the time for reviewing instructions, searching existing data sources, gathering and maintaining the data needed, and completing and reviewing the collection of information. The provisions of appropriate criminal and civil fraud privacy, and other statutes may be applicable to the information provided.

(Read instructions on page two before completing certification.)

A. The prospective lower tier participant certifies, by submission of this proposal, that neither it nor its principals is presently debarred, suspended, proposed for debarment, declared ineligible, or voluntarily excluded from participation in this transaction by any Federal department or agency;

B. Where the prospective lower tier participant is unable to certify to any of the statements in this certification, such prospective participant shall attach an explanation to this proposal.

ORGANIZATION NAME	PR/AWARD NUMBER OR PROJECT NAME
Fann Environmental, LLC	Jerome Wastewater Treatment Plant Improvements

NAME(S) AND TITLE(S) OF AUTHORIZED REPRESENTATIVE(S)
Michael Young, President

SIGNATURE(S)	DATE
	06/03/2023

In accordance with Federal civil rights law and U.S. Department of Agriculture (USDA) civil rights regulations and policies, the USDA, its agencies, offices, and employees, and institutions participating in or administering USDA programs are prohibited from discriminating based on race, color, national origin, religion, sex, gender identity (including gender expression), sexual orientation, disability, age, marital status, family/parental status, income derived from a public assistance program, political beliefs, or reprisal or retaliation for prior civil rights activity, in any program or activity conducted or funded by USDA (not all bases apply to all programs). Remedies and complaint filing deadlines vary by program or incident.

Persons with disabilities who require alternative means of communication for program information (e.g., Braille, large print, audiotape, American Sign Language, etc.) should contact the responsible agency or USDA's TARGET Center at (202) 720-2600 (voice and TTY) or contact USDA through the Federal Relay Service at (800) 877-8339. Additionally, program information may be made available in languages other than English.

To file a program discrimination complaint, complete the USDA Program Discrimination Complaint Form, AD-3027, found online at How to File a Program Discrimination Complaint (https://www.ascr.usda.gov/filing-program-discrimination-complaint-usda-customer) and at any USDA office or write a letter addressed to USDA and provide in the letter all of the information requested in the form. To request a copy of the complaint form, call (866) 632-9992. Submit your completed form or letter to USDA by: (1) mail: U.S. Department of Agriculture, Office of the Assistant Secretary for Civil Rights, 1400 Independence Avenue, SW, Washington, D.C. 20250-9410; (2) fax: (202) 690-7442.

Instructions for Certification

(1) By signing and submitting this form, the prospective lower tier participant is providing the certification set out on page 1 in accordance with these instructions.

(2) The certification in this clause is a material representation of fact upon which reliance was placed when this transaction was entered into. If it is later determined that the prospective lower tier participant knowingly rendered an erroneous certification, in addition to other remedies available to the Federal Government, the department or agency with which this transaction originated may pursue available remedies, including suspension or debarment.

(3) The prospective lower tier participant shall provide immediate written notice to the person(s) to which this proposal is submitted if at any time the prospective lower tier participant learns that its certification was erroneous when submitted or has become erroneous by reason of changed circumstances.

(4) The terms "covered transaction," "debarred," "suspended," "ineligible," "lower tier covered transaction," "participant," "person," "primary covered transaction," "principal," "proposal," and "voluntarily excluded," as used in this clause, have the meanings set out in the Definitions and Coverage sections of the rules implementing Executive Order 12549, at 2 C.F.R. Parts 180 and 417. You may contact the department or agency to which this proposal is being submitted for assistance in obtaining a copy of those regulations.

(5) The prospective lower tier participant agrees by submitting this form that, should the proposed covered transaction be entered into, it shall not knowingly enter into any lower tier covered transaction with a person who is debarred, suspended, declared ineligible, or voluntarily excluded from participation in this covered transaction, unless authorized by the department or agency with which this transaction originated.

(6) The prospective lower tier participant further agrees by submitting this form that it will include this clause titled "Certification Regarding Debarment, Suspension, Ineligibility and Voluntary Exclusion - Lower Tier Covered Transactions," without modification, in all lower tier covered transactions and in all solicitations for lower tier covered transactions.

(7) A participant in a covered transaction may rely upon a certification of a prospective participant in a lower tier covered transaction that is not debarred, suspended, ineligible, or voluntarily excluded from the covered transaction, unless it knows that the certification is erroneous. A participant may decide the method and frequency by which it determines the eligibility of its principals. Each participant may, but is not required to, check the System for Award Management (SAM) database.

(8) Nothing contained in the foregoing shall be construed to require establishment of a system of records to render in good faith the certification required by this clause. The knowledge and information of a participant is not required to exceed that which is normally possessed by a prudent person in the ordinary course of business dealings.

(9) Except for transactions authorized under paragraph (5) of these instructions, if a participant in a covered transaction knowingly enters into a lower tier covered transaction with a person who is suspended, debarred, ineligible, or voluntarily excluded from participation in this transaction, in addition to other remedies available to the Federal Government, the department or agency with which this transaction originated may pursue available remedies, including suspension and/or debarment.

RD Instruction 1940-Q
Exhibit A-1

CERTIFICATION FOR CONTRACTS, GRANTS AND LOANS

The undersigned certifies, to the best of his or her knowledge and belief, that:

1. No Federal appropriated funds have been paid or will be paid, by or on behalf of the undersigned, to any person for influencing or attempting to influence an officer or employee of any agency, a Member of Congress, an officer or employee of Congress, or an employee of a Member of Congress in connection with the awarding of any Federal contract, the making of any Federal grant or Federal loan, and the extension, continuation, renewal, amendment, or modification of any Federal contract, grant or loan.

2. If any funds other than Federal appropriated funds have been paid or will be paid to any person for influencing or attempting to influence an officer or employee of any agency, a Member of Congress, an officer or employee of Congress, or an employee of a Member of Congress in connection with this Federal contract, grant or loan, the undersigned shall complete and submit Standard Form - LLL, "Disclosure of Lobbying Activities," in accordance with its instructions.

3. The undersigned shall require that the language of this certification be included in the award documents for all subawards at all tiers (including contracts, subcontracts, and subgrants under grants and loans) and that all subrecipients shall certify and disclose accordingly.

This certification is a material representation of fact upon which reliance was placed when this transaction was made or entered into. Submission of this certification is a prerequisite for making or entering into this transaction imposed by section 1352, title 31, U.S. Code. Any person who fails to file the required certification shall be subject to a civil penalty of not less than $10,000 and not more than $100,000 for each such failure.

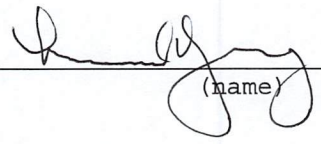

(name)

06/03/2026
(date)

President
(title)

oOo

(08-21-91) PN 171

PERFORMANCE BOND

Bond Number 024293116

Contractor Name: **Fann Environmental, LLC** Address *(principal place of business)*: **6078 Corsair Ave Ste A** **Prescott, AZ 86301**	**Surety** Name: Liberty Mutual Insurance Company Address *(principal place of business)*: 175 Berkeley Street, Boston MA 02117
Owner Name: **Town of Jerome** Mailing address *(principal place of business)*: **600 Clark Street, Jerome AZ, 86331**	**Contract** Description *(name and location)*: **Jerome Wastewater Treatment Plant Improvements, Sewer Plant Road, Jerome, AZ 86331** Contract Price: **$10,699,947.60** Effective Date of Contract: November 10, 2026

Bond

Bond Amount: $10,699,947.60 (Ten Million Six Hundred Ninety Nine Thousand Forty Seven & 60/100

Date of Bond: November 10, 2026

(Date of Bond cannot be earlier than Effective Date of Contract)

Modifications to this Bond form:

☐ None ☒ See Paragraph 16

Surety and Contractor, intending to be legally bound hereby, subject to the terms set forth in this Performance Bond, do each cause this Performance Bond to be duly executed by an authorized officer, agent, or representative.

Contractor as Principal	Surety
Fann Environmental, LLC *(Full formal name of Contractor)*	Liberty Mutual Insurance Company *(Full formal name of Surety) (corporate seal)*
By: _____ *(Signature)*	By: _____ *(Signature)(Attach Power of Attorney)*
Name: MICHAEL YOUNG *(Printed or typed)*	Name: Lori L. Dawson-Brown *(Printed or typed)*
Title: PRESIDENT	Title: Attorney-in-Fact
Attest: _____ *(Signature)*	Attest: _____ *(Signature)*
Name: Poppy Keegan VPC *(Printed or typed)*	Name: Cliff Spickler *(Printed or typed)*
Title: Executive Assistant/Witness	Title: Witness

Notes: (1) Provide supplemental execution by any additional parties, such as joint venturers. (2) Any singular reference to Contractor, Surety, Owner, or other party is considered plural where applicable.

EJCDC® C-610, Performance Bond.
Copyright© 2018 National Society of Professional Engineers, American Council of Engineering Companies, and American Society of Civil Engineers. All rights reserved.

1. The Contractor and Surety, jointly and severally, bind themselves, their heirs, executors, administrators, successors, and assigns to the Owner for the performance of the Construction Contract, which is incorporated herein by reference.
2. If the Contractor performs the Construction Contract, the Surety and the Contractor shall have no obligation under this Bond, except when applicable to participate in a conference as provided in Paragraph 3.
3. If there is no Owner Default under the Construction Contract, the Surety's obligation under this Bond will arise after:
    3.1. The Owner first provides notice to the Contractor and the Surety that the Owner is considering declaring a Contractor Default. Such notice may indicate whether the Owner is requesting a conference among the Owner, Contractor, and Surety to discuss the Contractor's performance. If the Owner does not request a conference, the Surety may, within five (5) business days after receipt of the Owner's notice, request such a conference. If the Surety timely requests a conference, the Owner shall attend. Unless the Owner agrees otherwise, any conference requested under this Paragraph 3.1 will be held within ten (10) business days of the Surety's receipt of the Owner's notice. If the Owner, the Contractor, and the Surety agree, the Contractor shall be allowed a reasonable time to perform the Construction Contract, but such an agreement does not waive the Owner's right, if any, subsequently to declare a Contractor Default;
    3.2. The Owner declares a Contractor Default, terminates the Construction Contract and notifies the Surety; and
    3.3. The Owner has agreed to pay the Balance of the Contract Price in accordance with the terms of the Construction Contract to the Surety or to a contractor selected to perform the Construction Contract.
4. Failure on the part of the Owner to comply with the notice requirement in Paragraph 3.1 does not constitute a failure to comply with a condition precedent to the Surety's obligations, or release the Surety from its obligations, except to the extent the Surety demonstrates actual prejudice.
5. When the Owner has satisfied the conditions of Paragraph 3, the Surety shall promptly and at the Surety's expense take one of the following actions:
    5.1. Arrange for the Contractor, with the consent of the Owner, to perform and complete the Construction Contract;
    5.2. Undertake to perform and complete the Construction Contract itself, through its agents or independent contractors;
    5.3. Obtain bids or negotiated proposals from qualified contractors acceptable to the Owner for a contract for performance and completion of the Construction Contract, arrange for a contract to be prepared for execution by the Owner and a contractor selected with the Owners concurrence, to be secured with performance and payment bonds executed by a qualified surety equivalent to the bonds issued on the Construction Contract, and pay to the Owner the amount of damages as described in Paragraph 7 in excess of the Balance of the Contract Price incurred by the Owner as a result of the Contractor Default; or
    5.4. Waive its right to perform and complete, arrange for completion, or obtain a new contractor, and with reasonable promptness under the circumstances:

Copyright© 2018 National Society of Professional Engineers, American Council of Engineering Companies, and American Society of Civil Engineers. All rights reserved.

5.4.1 After investigation, determine the amount for which it may be liable to the Owner and, as soon as practicable after the amount is determined, make payment to the Owner; or

5.4.2 Deny liability in whole or in part and notify the Owner, citing the reasons for denial.

6. If the Surety does not proceed as provided in Paragraph 5 with reasonable promptness, the Surety shall be deemed to be in default on this Bond seven days after receipt of an additional written notice from the Owner to the Surety demanding that the Surety perform its obligations under this Bond, and the Owner shall be entitled to enforce any remedy available to the Owner. If the Surety proceeds as provided in Paragraph 5.4, and the Owner refuses the payment, or the Surety has denied liability, in whole or in part, without further notice, the Owner shall be entitled to enforce any remedy available to the Owner.

7. If the Surety elects to act under Paragraph 5.1, 5.2, or 5.3, then the responsibilities of the Surety to the Owner will not be greater than those of the Contractor under the Construction Contract, and the responsibilities of the Owner to the Surety will not be greater than those of the Owner under the Construction Contract. Subject to the commitment by the Owner to pay the Balance of the Contract Price, the Surety is obligated, without duplication for:

   7.1. the responsibilities of the Contractor for correction of defective work and completion of the Construction Contract;

   7.2. additional legal, design professional, and delay costs resulting from the Contractor's Default, and resulting from the actions or failure to act of the Surety under Paragraph 5; and

   7.3. liquidated damages, or if no liquidated damages are specified in the Construction Contract, actual damages caused by delayed performance or non-performance of the Contractor.

8. If the Surety elects to act under Paragraph 5.1, 5.3, or 5.4, the Surety's liability is limited to the amount of this Bond.

9. The Surety shall not be liable to the Owner or others for obligations of the Contractor that are unrelated to the Construction Contract, and the Balance of the Contract Price will not be reduced or set off on account of any such unrelated obligations. No right of action will accrue on this Bond to any person or entity other than the Owner or its heirs, executors, administrators, successors, and assigns.

10. The Surety hereby waives notice of any change, including changes of time, to the Construction Contract or to related subcontracts, purchase orders, and other obligations.

11. Any proceeding, legal or equitable, under this Bond must be instituted in any court of competent jurisdiction in the location in which the work or part of the work is located and must be instituted within two years after a declaration of Contractor Default or within two years after the Contractor ceased working or within two years after the Surety refuses or fails to perform its obligations under this Bond, whichever occurs first. If the provisions of this paragraph are void or prohibited by law, the minimum periods of limitations available to sureties as a defense in the jurisdiction of the suit will be applicable.

12. Notice to the Surety, the Owner, or the Contractor must be mailed or delivered to the address shown on the page on which their signature appears.

13. When this Bond has been furnished to comply with a statutory or other legal requirement in the location where the construction was to be performed, any provision in this Bond conflicting with said statutory or legal requirement will be deemed deleted therefrom and provisions conforming to such

Copyright© 2018 National Society of Professional Engineers, American Council of Engineering Companies, and American Society of Civil Engineers. All rights reserved.

statutory or other legal requirement will be deemed incorporated herein. When so furnished, the intent is that this Bond will be construed as a statutory bond and not as a common law bond.

14. Definitions

14.1. *Balance of the Contract Price*—The total amount payable by the Owner to the Contractor under the Construction Contract after all proper adjustments have been made including allowance for the Contractor for any amounts received or to be received by the Owner in settlement of insurance or other claims for damages to which the Contractor is entitled, reduced by all valid and proper payments made to or on behalf of the Contractor under the Construction Contract.

14.2. *Construction Contract*—The agreement between the Owner and Contractor identified on the cover page, including all Contract Documents and changes made to the agreement and the Contract Documents.

14.3. *Contractor Default*—Failure of the Contractor, which has not been remedied or waived, to perform or otherwise to comply with a material term of the Construction Contract.

14.4. *Owner Default*—Failure of the Owner, which has not been remedied or waived, to pay the Contractor as required under the Construction Contract or to perform and complete or comply with the other material terms of the Construction Contract.

14.5. *Contract Documents*—All the documents that comprise the agreement between the Owner and Contractor.

15. If this Bond is issued for an agreement between a contractor and subcontractor, the term Contractor in this Bond will be deemed to be Subcontractor and the term Owner will be deemed to be Contractor.

16. Modifications to this Bond are as follows:

16.1. Pursuant to ARS Section 34-222.G:

The conditions and provisions in the performance bond regarding the surety's obligations shall follow the following form:

Now, therefore, the condition of this obligation is such, that if the principal faithfully performs and fulfills all of the undertakings, covenants, terms, conditions and agreements of the contract during the original term of the contract and any extension of the contract, with or without notice to the surety, and during the life of any guaranty required under the contract, and also performs and fulfills all of the undertakings, covenants, terms, conditions and agreements of all duly authorized modifications of the contract that may hereafter be made, notice of which modifications to the surety being hereby waived, the above obligation is void. Otherwise it remains in full force and effect.

Provided, however, that this bond is executed pursuant to the provisions of title 34, chapter 2, article 2, Arizona Revised Statutes, and all liabilities on this bond shall be determined in accordance with the provisions of title 34, chapter 2, article 2, Arizona Revised Statutes, to the extent as if it were copied at length in this agreement.

The prevailing party in a suit on this bond shall recover as part of the judgment reasonable attorney fees that may be fixed by a judge of the court.

Copyright© 2018 National Society of Professional Engineers, American Council of Engineering Companies, and American Society of Civil Engineers. All rights reserved.

PAYMENT BOND

Bond Number 024293116

Contractor	**Surety**
Name: **Fann Environmental, LLC** Address *(principal place of business)*: **6078 Corsair Ave Ste A** **Prescott, AZ 86301**	Name: Liberty Mutual Insurance Company Address *(principal place of business)*: 175 Berkeley Street, Boston MA 02117
Owner	**Contract**
Name: **Town of Jerome** Mailing address *(principal place of business)*: **600 Clark Street, Jerome AZ, 86331**	Description *(name and location)*: **Jerome Wastewater Treatment Plant Improvements, Sewer Plant Road, Jerome, AZ 86331** Contract Price: **$10,699,947.60** Effective Date of Contract: November 10, 2026

Bond

Bond Amount: $10,699,947.60 (Ten Million Six Hundred Ninety Nine Thousand Forty Seven & 60/100)

Date of Bond: November 10, 2026

(Date of Bond cannot be earlier than Effective Date of Contract)

Modifications to this Bond form:

☐ None ☒ See Paragraph 18

Surety and Contractor, intending to be legally bound hereby, subject to the terms set forth in this Payment Bond, do each cause this Payment Bond to be duly executed by an authorized officer, agent, or representative.

Contractor as Principal	Surety
Fann Environmental, LLC *(Full formal name of Contractor)*	Liberty Mutual Insurance Company *(Full formal name of Surety) (corporate seal)*
By: _____ *(Signature)*	By: _____ *(Signature)(Attach Power of Attorney)*
Name: MICHAEL YOUNG *(Printed or typed)*	Name: Lori L. Dawson-Brown *(Printed or typed)*
Title: PRESIDENT	Title: Attorney-in-Fact
Attest: _____ *(Signature)*	Attest: _____ *(Signature)*
Name: Poppy Keegan *(Printed or typed)*	Name: Cliff Spickler *(Printed or typed)*
Title: Executive Assistant / Witness	Title: Witness

Notes: (1) Provide supplemental execution by any additional parties, such as joint venturers. (2) Any singular reference to Contractor, Surety, Owner, or other party is considered plural where applicable.

EJCDC® C-615, Payment Bond.
Copyright© 2018 National Society of Professional Engineers, American Council of Engineering Companies, and American Society of Civil Engineers. All rights reserved.

1. The Contractor and Surety, jointly and severally, bind themselves, their heirs, executors, administrators, successors, and assigns to the Owner to pay for labor, materials, and equipment furnished for use in the performance of the Construction Contract, which is incorporated herein by reference, subject to the following terms.
2. If the Contractor promptly makes payment of all sums due to Claimants, and defends, indemnifies, and holds harmless the Owner from claims, demands, liens, or suits by any person or entity seeking payment for labor, materials, or equipment furnished for use in the performance of the Construction Contract, then the Surety and the Contractor shall have no obligation under this Bond.
3. If there is no Owner Default under the Construction Contract, the Surety's obligation to the Owner under this Bond will arise after the Owner has promptly notified the Contractor and the Surety (at the address described in Paragraph 13) of claims, demands, liens, or suits against the Owner or the Owner's property by any person or entity seeking payment for labor, materials, or equipment furnished for use in the performance of the Construction Contract, and tendered defense of such claims, demands, liens, or suits to the Contractor and the Surety.
4. When the Owner has satisfied the conditions in Paragraph 3, the Surety shall promptly and at the Surety's expense defend, indemnify, and hold harmless the Owner against a duly tendered claim, demand, lien, or suit.
5. The Surety's obligations to a Claimant under this Bond will arise after the following:
    5.1. Claimants who do not have a direct contract with the Contractor
        5.1.1. have furnished a written notice of non-payment to the Contractor, stating with substantial accuracy the amount claimed and the name of the party to whom the materials were, or equipment was, furnished or supplied or for whom the labor was done or performed, within ninety (90) days after having last performed labor or last furnished materials or equipment included in the Claim; and
        5.1.2. have sent a Claim to the Surety (at the address described in Paragraph 13).
    5.2. Claimants who are employed by or have a direct contract with the Contractor have sent a Claim to the Surety (at the address described in Paragraph 13).
6. If a notice of non-payment required by Paragraph 5.1.1 is given by the Owner to the Contractor, that is sufficient to satisfy a Claimant's obligation to furnish a written notice of non-payment under Paragraph 5.1.1.
7. When a Claimant has satisfied the conditions of Paragraph 5.1 or 5.2, whichever is applicable, the Surety shall promptly and at the Surety's expense take the following actions:
    7.1. Send an answer to the Claimant, with a copy to the Owner, within sixty (60) days after receipt of the Claim, stating the amounts that are undisputed and the basis for challenging any amounts that are disputed; and
    7.2. Pay or arrange for payment of any undisputed amounts.
    7.3. The Surety's failure to discharge its obligations under Paragraph 7.1 or 7.2 will not be deemed to constitute a waiver of defenses the Surety or Contractor may have or acquire as to a Claim, except as to undisputed amounts for which the Surety and Claimant have reached agreement. If, however, the Surety fails to discharge its obligations under Paragraph 7.1 or 7.2, the Surety shall indemnify the Claimant for the reasonable attorney's fees the Claimant incurs thereafter to recover any sums found to be due and owing to the Claimant.

Copyright© 2018 National Society of Professional Engineers, American Council of Engineering Companies, and American Society of Civil Engineers. All rights reserved.

8. The Surety's total obligation will not exceed the amount of this Bond, plus the amount of reasonable attorney's fees provided under Paragraph 7.3, and the amount of this Bond will be credited for any payments made in good faith by the Surety.

9. Amounts owed by the Owner to the Contractor under the Construction Contract will be used for the performance of the Construction Contract and to satisfy claims, if any, under any construction performance bond. By the Contractor furnishing and the Owner accepting this Bond, they agree that all funds earned by the Contractor in the performance of the Construction Contract are dedicated to satisfying obligations of the Contractor and Surety under this Bond, subject to the Owner's priority to use the funds for the completion of the work.

10. The Surety shall not be liable to the Owner, Claimants, or others for obligations of the Contractor that are unrelated to the Construction Contract. The Owner shall not be liable for the payment of any costs or expenses of any Claimant under this Bond, and shall have under this Bond no obligation to make payments to or give notice on behalf of Claimants, or otherwise have any obligations to Claimants under this Bond.

11. The Surety hereby waives notice of any change, including changes of time, to the Construction Contract or to related subcontracts, purchase orders, and other obligations.

12. No suit or action will be commenced by a Claimant under this Bond other than in a court of competent jurisdiction in the state in which the project that is the subject of the Construction Contract is located or after the expiration of one year from the date (1) on which the Claimant sent a Claim to the Surety pursuant to Paragraph 5.1.2 or 5.2, or (2) on which the last labor or service was performed by anyone or the last materials or equipment were furnished by anyone under the Construction Contract, whichever of (1) or (2) first occurs. If the provisions of this paragraph are void or prohibited by law, the minimum period of limitation available to sureties as a defense in the jurisdiction of the suit will be applicable.

13. Notice and Claims to the Surety, the Owner, or the Contractor must be mailed or delivered to the address shown on the page on which their signature appears. Actual receipt of notice or Claims, however accomplished, will be sufficient compliance as of the date received.

14. When this Bond has been furnished to comply with a statutory or other legal requirement in the location where the construction was to be performed, any provision in this Bond conflicting with said statutory or legal requirement will be deemed deleted here from and provisions conforming to such statutory or other legal requirement will be deemed incorporated herein. When so furnished, the intent is that this Bond will be construed as a statutory bond and not as a common law bond.

15. Upon requests by any person or entity appearing to be a potential beneficiary of this Bond, the Contractor and Owner shall promptly furnish a copy of this Bond or shall permit a copy to be made.

16. Definitions

    16.1. *Claim*—A written statement by the Claimant including at a minimum:

        16.1.1. The name of the Claimant;

        16.1.2. The name of the person for whom the labor was done, or materials or equipment furnished;

        16.1.3. A copy of the agreement or purchase order pursuant to which labor, materials, or equipment was furnished for use in the performance of the Construction Contract;

        16.1.4. A brief description of the labor, materials, or equipment furnished;

Copyright© 2018 National Society of Professional Engineers, American Council of Engineering Companies, and American Society of Civil Engineers. All rights reserved.

16.1.5. The date on which the Claimant last performed labor or last furnished materials or equipment for use in the performance of the Construction Contract;

16.1.6. The total amount earned by the Claimant for labor, materials, or equipment furnished as of the date of the Claim;

16.1.7. The total amount of previous payments received by the Claimant; and

16.1.8. The total amount due and unpaid to the Claimant for labor, materials, or equipment furnished as of the date of the Claim.

16.2. *Claimant*—An individual or entity having a direct contract with the Contractor or with a subcontractor of the Contractor to furnish labor, materials, or equipment for use in the performance of the Construction Contract. The term Claimant also includes any individual or entity that has rightfully asserted a claim under an applicable mechanic's lien or similar statute against the real property upon which the Project is located. The intent of this Bond is to include without limitation in the terms of "labor, materials, or equipment" that part of the water, gas, power, light, heat, oil, gasoline, telephone service, or rental equipment used in the Construction Contract, architectural and engineering services required for performance of the work of the Contractor and the Contractor's subcontractors, and all other items for which a mechanic's lien may be asserted in the jurisdiction where the labor, materials, or equipment were furnished.

16.3. *Construction Contract*—The agreement between the Owner and Contractor identified on the cover page, including all Contract Documents and all changes made to the agreement and the Contract Documents.

16.4. *Owner Default*—Failure of the Owner, which has not been remedied or waived, to pay the Contractor as required under the Construction Contract or to perform and complete or comply with the other material terms of the Construction Contract.

16.5. *Contract Documents*—All the documents that comprise the agreement between the Owner and Contractor.

17. If this Bond is issued for an agreement between a contractor and subcontractor, the term Contractor in this Bond will be deemed to be Subcontractor and the term Owner will be deemed to be Contractor.

18. Modifications to this Bond are as follows:

18.1. Pursuant to ARS Section 34-222.G:

Now, therefore, the condition of this obligation is such, that if the principal promptly pays all monies due to all persons supplying labor or materials to the principal or the principal's subcontractors in the prosecution of the work provided for in the contract, this obligation is void. Otherwise it remains in full force and effect.

Provided, however, that this bond is executed pursuant to the provisions of title 34, chapter 2, article 2, Arizona Revised Statutes, and all liabilities on this bond shall be determined in accordance with the provisions, conditions and limitations of title 34, chapter 2, article 2, Arizona Revised Statutes, to the same extent as if they were copied at length in this agreement.

The prevailing party in a suit on this bond shall recover as a part of the judgment reasonable attorney fees that may be fixed by a judge of the court.

Copyright© 2018 National Society of Professional Engineers, American Council of Engineering Companies, and American Society of Civil Engineers. All rights reserved.

INSURICA®

Insurance Producer Endorsement

This endorsement changes the policy/bond to include:

Your agent/agency for this policy is:

INSURICA Southwest Insurance Services, LLC
4686 E. Van Buren #310
Phoenix AZ 85008
602-273-1625

All other terms and conditions of the policy/bond remain unchanged.

Liberty Mutual SURETY

POWER OF ATTORNEY

Liberty Mutual Insurance Company
The Ohio Casualty Insurance Company
West American Insurance Company

Certificate No: **8213139 - 969537**

KNOWN ALL PERSONS BY THESE PRESENTS: That The Ohio Casualty Insurance Company is a corporation duly organized under the laws of the State of New Hampshire, that Liberty Mutual Insurance Company is a corporation duly organized under the laws of the State of Massachusetts, and West American Insurance Company is a corporation duly organized under the laws of the State of Indiana (herein collectively called the "Companies"), pursuant to and by authority herein set forth, does hereby name, constitute and appoint, Blake C. Johnson, Cliff Spickler, Desirae Darko, Halle Finn, Lori L. Dawson - Brown, Nick Duckworth, Wendy Capirci

all of the city of Phoenix state of AZ each individually if there be more than one named, its true and lawful attorney-in-fact to make, execute, seal, acknowledge and deliver, for and on its behalf as surety and as its act and deed, any and all undertakings, bonds, recognizances and other surety obligations, in pursuance of these presents and shall be as binding upon the Companies as if they have been duly signed by the president and attested by the secretary of the Companies in their own proper persons.

IN WITNESS WHEREOF, this Power of Attorney has been subscribed by an authorized officer or official of the Companies and the corporate seals of the Companies have been affixed thereto this 14th day of February, 2025.

Liberty Mutual Insurance Company
The Ohio Casualty Insurance Company
West American Insurance Company

By: _____
Nathan J. Zangerle, Assistant Secretary

State of PENNSYLVANIA
County of MONTGOMERY ss

On this 14th day of February, 2025 before me personally appeared Nathan J. Zangerle, who acknowledged himself to be the Assistant Secretary of Liberty Mutual Insurance Company, The Ohio Casualty Company, and West American Insurance Company, and that he, as such, being authorized so to do, execute the foregoing instrument for the purposes therein contained by signing on behalf of the corporations by himself as a duly authorized officer.

IN WITNESS WHEREOF, I have hereunto subscribed my name and affixed my notarial seal at Plymouth Meeting, Pennsylvania, on the day and year first above written.

Commonwealth of Pennsylvania - Notary Seal
Teresa Pastella, Notary Public
Montgomery County
My commission expires March 28, 2029
Commission number 1126044
Member, Pennsylvania Association of Notaries

By: _____
Teresa Pastella, Notary Public

This Power of Attorney is made and executed pursuant to and by authority of the following By-laws and Authorizations of The Ohio Casualty Insurance Company, Liberty Mutual Insurance Company, and West American Insurance Company which resolutions are now in full force and effect reading as follows:

ARTICLE IV – OFFICERS: Section 12. Power of Attorney.
Any officer or other official of the Corporation authorized for that purpose in writing by the Chairman or the President, and subject to such limitation as the Chairman or the President may prescribe, shall appoint such attorneys-in-fact, as may be necessary to act in behalf of the Corporation to make, execute, seal, acknowledge and deliver as surety any and all undertakings, bonds, recognizances and other surety obligations. Such attorneys-in-fact, subject to the limitations set forth in their respective powers of attorney, shall have full power to bind the Corporation by their signature and execution of any such instruments and to attach thereto the seal of the Corporation. When so executed, such instruments shall be as binding as if signed by the President and attested to by the Secretary. Any power or authority granted to any representative or attorney-in-fact under the provisions of this article may be revoked at any time by the Board, the Chairman, the President or by the officer or officers granting such power or authority.

ARTICLE XIII – Execution of Contracts: Section 5. Surety Bonds and Undertakings.
Any officer of the Company authorized for that purpose in writing by the chairman or the president, and subject to such limitations as the chairman or the president may prescribe, shall appoint such attorneys-in-fact, as may be necessary to act in behalf of the Company to make, execute, seal, acknowledge and deliver as surety any and all undertakings, bonds, recognizances and other surety obligations. Such attorneys-in-fact subject to the limitations set forth in their respective powers of attorney, shall have full power to bind the Company by their signature and execution of any such instruments and to attach thereto the seal of the Company. When so executed such instruments shall be as binding as if signed by the president and attested by the secretary.

Certificate of Designation – The President of the Company, acting pursuant to the Bylaws of the Company, authorizes Nathan J. Zangerle, Assistant Secretary to appoint such attorneys-in-fact as may be necessary to act on behalf of the Company to make, execute, seal, acknowledge and deliver as surety any and all undertakings, bonds, recognizances and other surety obligations.

Authorization – By unanimous consent of the Company's Board of Directors, the Company consents that facsimile or mechanically reproduced signature of any assistant secretary of the Company, wherever appearing upon a certified copy of any power of attorney issued by the Company in connection with surety bonds, shall be valid and binding upon the Company with the same force and effect as though manually affixed.

I, Renee C. Llewellyn, the undersigned, Assistant Secretary, The Ohio Casualty Insurance Company, Liberty Mutual Insurance Company, and West American Insurance Company do hereby certify that the original power of attorney of which the foregoing is a full, true and correct copy of the Power of Attorney executed by said Companies, is in full force and effect and has not been revoked.

IN TESTIMONY WHEREOF, I have hereunto set my hand and affixed the seals of said Companies this 10th day of November 2026.

By: _____
Renee C. Llewellyn, Assistant Secretary

Not valid for mortgage, note, loan, letter of credit, currency rate, interest rate or residual value guarantees.

For bond and/or Power of Attorney (POA) verification inquiries, please call 610-832-8240 or email HOSUR@libertymutual.com.

CONSTRUCTION CONTRACT

Town of Jerome
Wastewater Treatment Plant Improvements
Fann Environmental, LLC

October 2026

Prepared For:

Town of Jerome
600 Clark Street
P.O. Box 335
Jerome, AZ 86331

Prepared By:

Pacific Advanced Civil Engineering, Inc.
8723 E Via de Commercio #A-204
Scottsdale, AZ 85258
(480) 991-3595

Index

Notice of Award (EJCDC C-510) ..... Pages 1 - 1
Agreement Between Owner & Contractor (EJCDC C-520) ..... Pages 1 – 7
Performance Bond (EJCDC C-610) ..... Pages 1 - 4
Payment Bond (EJCDC C-615) ..... Pages 1 - 4
Certification of Owner's Attorney & Agency Concurrence (RUS 1780-26, Ex A, Attach 1) ..... Pages 1 – 1
General Conditions (EJCDC C-700) ..... Pages 1 - 70
Supplementary Conditions (EJCDC C-800) ..... Pages 1 – 28
Notice to Proceed (EJCDC C-550) ..... Pages 1 – 1
RD Construction Sign ..... Pages 1 – 1
Application for Payment (C-620) ..... Pages 1 - 6
Work Change Directive (EJCDC C-940) ..... Pages 1 - 1
Change Order (EJCDC C-941) ..... Pages 1 - 1
Field Order (EJCDC C-942) ..... Pages 1 - 1
General Contractor's AIS Certification (RUS 1780-26, Ex A, Attach 4) ..... Pages 1 - 1
Manufacturer's AIS Certification (RUS 1780-26, Ex A, Attach 5) ..... Pages 1 - 1
Certificate of Substantial Completion (EJCDC C-625) ..... Pages 1 - 1
Notice of Acceptability (EJCDC C-626) ..... Pages 1 - 1
Technical Specifications
Engineering Plans
Bid Addenda #1 - #5
Contractor’s Bid

NOTICE OF AWARD

Date of Issuance:	October 22, 2026		
Owner:	Town of Jerome	Owner's Project No.:	N/A
Engineer:	PACE	Engineer's Project No.:	B614
Project:	Jerome Wastewater Treatment Plant Improvements		
Contract Name:	Jerome Wastewater Treatment Plant Improvements		
Bidder:	Fann Environmental, LLC		
Bidder's Address:	6708 Corsair Ave Ste A Prescott, AZ 86301		

You are notified that Owner has accepted your Bid dated **June 3, 2026** for the above Contract, and that you are the Successful Bidder and are awarded a Contract for:

The Town of Jerome Wastewater Treatment Plant Improvements.

The Contract Price of $10,699,947.60 and Contract are contingent upon USDA-RD concurrence. The Contract Price is subject to adjustment based on the provisions of the Contract, including but not limited to those governing changes, Unit Price Work, and Work performed on a cost-plus-fee basis, as applicable.

One (1) electronic, unexecuted counterparts of the Agreement accompany this Notice of Award, and one copy of the Contract Documents accompanies this Notice of Award, or has been transmitted or made available to Bidder electronically.

☒ Drawings will be delivered separately from the other Contract Documents.

You must comply with the following conditions precedent within 15 days of the date of receipt of this Notice of Award:

1. Deliver to Owner **One (1) hard copy and one (1) electronic,** counterparts of the Agreement, signed by Bidder (as Contractor).
2. Deliver with the signed Agreement(s) the Contract security (such as required performance and payment bonds) and insurance documentation, as specified in the Instructions to Bidders and in the General Conditions, Articles 2 and 6.
3. Other conditions precedent (if any): **None**

Failure to comply with these conditions within the time specified will entitle Owner to consider you in default, annul this Notice of Award, and declare your Bid security forfeited.

Within **30** days after you comply with the above conditions, Owner will return to you one fully signed counterpart of the Agreement, together with any additional copies of the Contract Documents as indicated in Paragraph 2.02 of the General Conditions.

Owner: **Town of Jerome**

By *(signature)*: Brett Klein

Name *(printed)*: Brett Klein

Title: Town Manager / Clerk

Copy: Engineer

EJCDC® C-510, Notice of Award.
Copyright© 2018 National Society of Professional Engineers, American Council of Engineering Companies, and American Society of Civil Engineers. All rights reserved.

AGREEMENT BETWEEN OWNER AND CONTRACTOR

This Agreement is by and between **Town of Jerome** ("Owner") and **Fann Environmental, LLC** ("Contractor").

Terms used in this Agreement have the meanings stated in the General Conditions and the Supplementary Conditions.

Owner and Contractor hereby agree as follows:

ARTICLE 1—WORK

1.01 Contractor shall complete all Work as specified or indicated in the Contract Documents. The Work is generally described as follows: Improvements include conversion of this existing trickling filter facility to a 90,000 GPD Sequencing Batch Reactors (SBR) with removal and demolition of existing wastewater equipment; construction of two new 54,000-gallon SBR basins, aerobic digester basin, equalization basin, sludge dewatering, chlorine contact chamber, drying beds, etc.; installation of new 12-inch PVC gravity sewer main, complete with piping and piping appurtenances; construction of a new access roadway, including all grading and drainage work.

ARTICLE 2—THE PROJECT

2.01 The Project, of which the Work under the Contract Documents is a part, is generally described as follows: **Jerome Wastewater Treatment Plant Improvements.**

ARTICLE 3—ENGINEER

3.01 The Owner has retained **Pacific Advanced Civil Engineering, Inc. (PACE)** ("Engineer") to act as Owner's representative, assume all duties and responsibilities of Engineer, and have the rights and authority assigned to Engineer in the Contract.

3.02 The part of the Project that pertains to the Work has been designed by **the Engineer.**

ARTICLE 4—CONTRACT TIMES

4.01 *Time is of the Essence*

A. All time limits for Milestones, if any, Substantial Completion, and completion and readiness for final payment as stated in the Contract Documents are of the essence of the Contract.

4.02 **[Deleted]**

4.03 *Contract Times: Days*

A. The Work will be substantially complete within **300** days after the date when the Contract Times commence to run as provided in Paragraph 4.01 of the General Conditions, and completed and ready for final payment in accordance with Paragraph 15.06 of the General Conditions within **330** days after the date when the Contract Times commence to run.

EJCDC® C-520, Agreement between Owner and Contractor for Construction Contract (Stipulated Price).
Copyright© 2018 National Society of Professional Engineers, American Council of Engineering Companies, and American Society of Civil Engineers. All rights reserved.

4.04 **[Deleted]**

4.05 *Liquidated Damages*

A. Contractor and Owner recognize that time is of the essence as stated in Paragraph 4.01 above and that Owner will suffer financial and other losses if the Work is not completed and Milestones not achieved within the Contract Times, as duly modified. The parties also recognize the delays, expense, and difficulties involved in proving, in a legal or arbitration proceeding, the actual loss suffered by Owner if the Work is not completed on time. Accordingly, instead of requiring any such proof, Owner and Contractor agree that as liquidated damages for delay (but not as a penalty):

1. *Substantial Completion:* Contractor shall pay Owner $**1,600.00** for each day that expires after the time (as duly adjusted pursuant to the Contract) specified above for Substantial Completion, until the Work is substantially complete. **Calculations assume continued RPR field services and associated expenses. It also includes Owner and Engineer project management and office engineering efforts to address unresolved construction issues resulting in extended services beyond the date of substantial completion as stipulated in the contract documents.**

2. *Completion of Remaining Work:* After Substantial Completion, if Contractor shall neglect, refuse, or fail to complete the remaining Work within the Contract Times (as duly adjusted pursuant to the Contract) for completion and readiness for final payment, Contractor shall pay Owner $**533.00** for each day that expires after such time until the Work is completed and ready for final payment. **Liquidated damages beyond the date of project Final Completion are calculated at approximately one-third of the amount for Substantial Completion.**

3. **[Deleted]**

4. Liquidated damages for failing to timely attain ~~Milestones,~~ Substantial Completion, and final completion are not additive, and will not be imposed concurrently.

B. If Owner recovers liquidated damages for a delay in completion by Contractor, then such liquidated damages are Owner's sole and exclusive remedy for such delay, and Owner is precluded from recovering any other damages, whether actual, direct, excess, or consequential, for such delay, except for special damages (if any) specified in this Agreement.

C. **[Deleted]**

4.06 ***[Deleted]***

ARTICLE 5—CONTRACT PRICE

5.01 Owner shall pay Contractor for completion of the Work in accordance with the Contract Documents, the amounts that follow, subject to adjustment under the Contract:

A. For all Work other than Unit Price Work, a lump sum of $10,699,947.60.

EJCDC® C-520, Agreement between Owner and Contractor for Construction Contract (Stipulated Price).
Copyright© 2018 National Society of Professional Engineers, American Council of Engineering Companies, and American Society of Civil Engineers. All rights reserved.

ARTICLE 6—PAYMENT PROCEDURES

6.01 *Submittal and Processing of Payments*

A. Contractor shall submit Applications for Payment in accordance with Article 15 of the General Conditions. Applications for Payment will be processed by Engineer as provided in the General Conditions.

6.02 *Progress Payments; Retainage*

A. Owner shall make progress payments on the basis of Contractor's Applications for Payment on or about the **5th** day of each month during performance of the Work as provided in Paragraph 6.02.A.1 below, provided that such Applications for Payment have been submitted in a timely manner and otherwise meet the requirements of the Contract. All such payments will be measured by the Schedule of Values established as provided in the General Conditions (and in the case of Unit Price Work based on the number of units completed) or, in the event there is no Schedule of Values, as provided elsewhere in the Contract.

1. Prior to Substantial Completion, progress payments will be made in an amount equal to the percentage indicated below but, in each case, less the aggregate of payments previously made and less such amounts as Owner may withhold, including but not limited to liquidated damages, in accordance with the Contract.

a. **95** percent of the value of the Work completed (with the balance being retainage).

1) **[Deleted]**

b. **95** percent of cost of materials and equipment not incorporated in the Work (with the balance being retainage).

B. Upon Substantial Completion **of the entire construction to be provided under the construction Contract Documents**, Owner shall pay an amount sufficient to increase total payments to Contractor to **100** percent of the Work completed, less such amounts set off by Owner pursuant to Paragraph 15.01.E of the General Conditions, and less **200** percent of Engineer's estimate of the value of Work to be completed or corrected as shown on the punch list of items to be completed or corrected prior to final payment.

6.03 *Final Payment*

A. Upon final completion and acceptance of the Work, Owner shall pay the remainder of the Contract Price in accordance with Paragraph 15.06 of the General Conditions.

6.04 *Consent of Surety*

A. Owner will not make final payment, or return or release retainage at Substantial Completion or any other time, unless Contractor submits written consent of the surety to such payment, return, or release.

6.05 *Interest*

A. All amounts not paid when due will bear interest at the rate of **1.5** percent per annum.

EJCDC® C-520, Agreement between Owner and Contractor for Construction Contract (Stipulated Price).
Copyright© 2018 National Society of Professional Engineers, American Council of Engineering Companies, and American Society of Civil Engineers. All rights reserved.

ARTICLE 7—CONTRACT DOCUMENTS

7.01 *Contents*

A. The Contract Documents consist of all of the following:

1. This Agreement.
2. Bonds:
    a. Performance bond (together with power of attorney).
    b. Payment bond (together with power of attorney).
3. General Conditions.
4. Supplementary Conditions.
5. **Technical** Specifications.
6. Drawings (not attached but incorporated by reference) consisting of **83** sheets with each sheet bearing the following general title: **Jerome Wastewater Treatment Plant.**
8. Addenda (numbers **1** to **5**, inclusive).
9. Exhibits to this Agreement (enumerated as follows):
    a. Contractor's Bid
    b. Certification of Owner's Attorney and Agency Concurrence
    c. Application for Payment
    d. Notice to Proceed.
    e. Work Change Directives.
    f. Change Orders.
    g. Field Orders.
    h. General (Prime) Contractor's Certification for AIS.
    i. Manufacturer's Certification for AIS.
    j. Certificate of Substantial Completion.
    k. Notice of Acceptability of Work.
10. The following which may be delivered or issued on or after the Effective Date of the Contract and are not attached hereto:
    a. Warranty Bond, if any.

B. The Contract Documents listed in Paragraph 7.01.A are attached to this Agreement (except as expressly noted otherwise above).

C. There are no Contract Documents other than those listed above in this Article 7.

D. The Contract Documents may only be amended, modified, or supplemented as provided in the Contract.

Copyright© 2018 National Society of Professional Engineers, American Council of Engineering Companies, and American Society of Civil Engineers. All rights reserved.

ARTICLE 8—REPRESENTATIONS, CERTIFICATIONS, AND STIPULATIONS

8.01 *Contractor's Representations*

A. In order to induce Owner to enter into this Contract, Contractor makes the following representations:

1. Contractor has examined and carefully studied the Contract Documents, including Addenda.

2. Contractor has visited the Site **(if required)**, conducted a thorough visual examination of the Site and adjacent areas, and become familiar with the general, local, and Site conditions that may affect cost, progress, and performance of the Work.

3. Contractor is familiar with all Laws and Regulations that may affect cost, progress, and performance of the Work.

4. Contractor has carefully studied the reports of explorations and tests of subsurface conditions at or adjacent to the Site and the drawings of physical conditions relating to existing surface or subsurface structures at the Site that have been identified in the Supplementary Conditions, with respect to the Technical Data in such reports and drawings.

5. Contractor has carefully studied the reports and drawings relating to Hazardous Environmental Conditions, if any, at or adjacent to the Site that have been identified in the Supplementary Conditions, with respect to Technical Data in such reports and drawings.

6. Contractor has considered the information known to Contractor itself; information commonly known to contractors doing business in the locality of the Site; information and observations obtained from visits to the Site; the Contract Documents; and the Technical Data identified in the Supplementary Conditions or by definition, with respect to the effect of such information, observations, and Technical Data on (a) the cost, progress, and performance of the Work; (b) the means, methods, techniques, sequences, and procedures of construction to be employed by Contractor; and (c) Contractor's safety precautions and programs.

7. Based on the information and observations referred to in the preceding paragraph, Contractor agrees that no further examinations, investigations, explorations, tests, studies, or data are necessary for the performance of the Work at the Contract Price, within the Contract Times, and in accordance with the other terms and conditions of the Contract.

8. Contractor is aware of the general nature of work to be performed by Owner and others at the Site that relates to the Work as indicated in the Contract Documents.

9. Contractor has given Engineer written notice of all conflicts, errors, ambiguities, or discrepancies that Contractor has discovered in the Contract Documents, and of discrepancies between Site conditions and the Contract Documents, and the written resolution thereof by Engineer is acceptable to Contractor.

10. The Contract Documents are generally sufficient to indicate and convey understanding of all terms and conditions for performance and furnishing of the Work.

EJCDC® C-520, Agreement between Owner and Contractor for Construction Contract (Stipulated Price).
Copyright© 2018 National Society of Professional Engineers, American Council of Engineering Companies, and American Society of Civil Engineers. All rights reserved.

11. Contractor's entry into this Contract constitutes an incontrovertible representation by Contractor that without exception all prices in the Agreement are premised upon performing and furnishing the Work required by the Contract Documents.

8.02 *Contractor's Certifications*

A. Contractor certifies that it has not engaged in corrupt, fraudulent, collusive, or coercive practices in competing for or in executing the Contract. For the purposes of this Paragraph 8.02:

1. "corrupt practice" means the offering, giving, receiving, or soliciting of anything of value likely to influence the action of a public official in the bidding process or in the Contract execution;

2. "fraudulent practice" means an intentional misrepresentation of facts made (a) to influence the bidding process or the execution of the Contract to the detriment of Owner, (b) to establish Bid or Contract prices at artificial non-competitive levels, or (c) to deprive Owner of the benefits of free and open competition;

3. "collusive practice" means a scheme or arrangement between two or more Bidders, with or without the knowledge of Owner, a purpose of which is to establish Bid prices at artificial, non-competitive levels; and

4. "coercive practice" means harming or threatening to harm, directly or indirectly, persons or their property to influence their participation in the bidding process or affect the execution of the Contract.

8.03 *Standard General Conditions*

A. Owner stipulates that if the General Conditions that are made a part of this Contract are EJCDC® C-700, Standard General Conditions for the Construction Contract (2018), published by the Engineers Joint Contract Documents Committee, and if Owner is the party that has furnished said General Conditions, then Owner has plainly shown all modifications to the standard wording of such published document to the Contractor, through a process such as highlighting or "track changes" (redline/strikeout), or in the Supplementary Conditions.

Copyright© 2018 National Society of Professional Engineers, American Council of Engineering Companies, and American Society of Civil Engineers. All rights reserved.

IN WITNESS WHEREOF, Owner and Contractor have signed this Agreement.

This Agreement will be effective on November 10, 2026 (which is the Effective Date of the Contract).

Owner:	Contractor:
Town of Jerome	Fann Environmental, LLC
(typed or printed name of organization)	*(typed or printed name of organization)*
By: _____	By: _____
(individual's signature)	*(individual's signature)*
Date: _____	Date: 11/05/2026
(date signed)	*(date signed)*
Name: _____	Name: Michael Young
(typed or printed)	*(typed or printed)*
Title: _____	Title: President
(typed or printed)	*(typed or printed)*
	*(If **[Type of Entity]** is a corporation, a partnership, or a joint venture, attach evidence of authority to sign.)*
Attest: _____	Attest: _____
(individual's signature)	*(individual's signature)*
Title: _____	Title: Witness/Executive Assistant
(typed or printed)	*(typed or printed)*
Address for giving notices:	Address for giving notices:
600 Clark Street	6708 Corsair Avenue
P.O. Box 335	Suite A
Jerome, AZ 86331	Prescott, AZ 86301
Designated Representative:	Designated Representative:
Name: _____	Name: _____
(typed or printed)	*(typed or printed)*
Title: _____	Title: _____
(typed or printed)	*(typed or printed)*
Address:	Address:
Phone: _____	Phone: _____
Email: _____	Email: _____
*(If **[Type of Entity]** is a corporation, attach evidence of authority to sign. If **[Type of Entity]** is a public body, attach evidence of authority to sign and resolution or other documents authorizing execution of this Agreement.)*	License No.: _____ *(where applicable)*
	State: _____

EJCDC® C-520, Agreement between Owner and Contractor for Construction Contract (Stipulated Price).
Copyright© 2018 National Society of Professional Engineers, American Council of Engineering Companies, and American Society of Civil Engineers. All rights reserved.

File Attachments for Item:

J. Consider Change Order #1 to the Construction Contract for the Jerome Wastewater Treatment Plant Improvements Resulting in an Increase to the Contract in the Amount of, $449,114.63

Council will consider and may approve Change Order #1.

CHANGE ORDER NO.: 1

Owner:	Town of Jerome	Owner's Project No.:	N/A
Engineer:	PACE	Engineer's Project No.:	B614
Contractor:	Fann Environmental, LLC	Contractor's Project No.:	
Project:	Jerome Wastewater Treatment Plant Improvements		
Contract Name:	Jerome Wastewater Treatment Plant Improvements		
Date Issued:	October 22, 2026	Effective Date of Change Order:	October 22, 2026

The Contract is modified as follows upon execution of this Change Order:

Description:

BABA Material Escalations.
Provide surface-mounted mixers in lieu of submersible mixers as a value-engineering modification.
Provide HDPE piping in lieu of FPVC piping as a value-engineering modification.

Attachments:

Email from Fann Environmental, LLC.

Change in Contract Price	**Change in Contract Times [State Contract Times as either a specific date or a number of days]**
Original Contract Price: $ 10,699,947.60	Original Contract Times: Substantial Completion: 300 Ready for final payment: 330
[Increase] [Decrease] from previously approved Change Orders No. 0 to No.0: $ 0	**Increase** from previously approved Change Orders No.0 to No. **0**: Substantial Completion: 0 Ready for final payment: 0
Contract Price prior to this Change Order: $ 0	Contract Times prior to this Change Order: Substantial Completion: 300 Ready for final payment: 330
Increase this Change Order: $ 449,114.63	**Increase** this Change Order: Substantial Completion: 0 Ready for final payment: 0
Contract Price incorporating this Change Order: $ 11,149,062.23	Contract Times with all approved Change Orders: Substantial Completion: 300 Ready for final payment: 330

Recommended by Engineer (if required)	Accepted by Contractor
By:	
Title:	
Date:	
Authorized by Owner	**Approved by Funding Agency (if applicable)**
By:	
Title:	
Date:	

EJCDC® C-941, Change Order EJCDC® C-941, Change Order, Rev.1.
Copyright© 2018 National Society of Professional Engineers, American Council of Engineering Companies and American Society of Civil Engineers. All rights reserved.

Outlook

Jerome WWTP BABA Escalation

From Paul Johnson <paulj@fannenvironmental.com>
Date Tue 10/13/2026 4:24 PM
To Taylor Pierce <tpierce@pacewater.com>; Andrea Jaycox <ajaycox@pacewater.com>
Cc Mike Young <mikeyoung@fannenvironmental.com>; Poppy Keegan <pkeegan@fannenvironmental.com>

Taylor,
In regard to our known price escalations for the Jerome WWTP project I have attached a pdf with the original bid price and the cost escalation or deduct (1) as things sit today. As discussed at the meeting this morning the following is our summary of the bid price:

Base Bid	$9,788,382.60
Bid Alternates	$911,565.00
BABA / Material Escalations	$577,804.63
TOTAL BID PRICE	$11,277,752.23

This total already accounts for approximately ($90,000) Fann Environmental has absorbed in the first review for BABA pricing on or about 6-18-26.

Subcontractor/Supplier	Quote For	Original Quote	Revised Quote	Increase	Notes
Aqua-Aerobic Systems	Batch Reactor, Post-EQ, Digester	$ 786,240.00	$ 1,192,070.00	$ 405,830.00	IES Southwest - Ryan Spielman 10-13-26
Border States	Gear	$ 87,780.00	$ 96,256.00	$ 8,476.00	Update 9-30-26 (Eaton & ASCO Gear (MPZ and Loose breakers from Mex & Dom Rep) 37-41 Weeks for SES, 18-20 Weeks BABA Xfmr
	ATS	$ 22,539.00	$ 28,899.00	$ 6,360.00	
	Lighting	$ 32,106.00	$ 35,601.00	$ 3,495.00	
Brown and White	Guardrail	$ 120,581.00	$ 149,936.25	$ 29,355.25	
Darcor	MCP 1 & 2	$ 50,250.00	$ 59,435.00	$ 9,185.00	Estimate - still working with supplier to finalize
Empire CAT	Generator	$ 59,520.00	$ 73,980.00	$ 14,460.00	
Envirodyne Systems	Sludge Pump & Polymer System	$ 246,620.00	$ 256,620.00	$ 13,335.00	per 9/25/26 email from RE Sheker
Field Lining Systems	Liner Procurement and Installation	$ 117,320.00	$ 124,527.00	$ 7,207.00	
Fortiline	Pipe and Fittings	$ 485,365.38	$ 530,132.94	$ 44,767.56	
ISEC Inc	Metal Lab Cabinets w/ Labor & Hardware	$ 30,988.00	$ 33,932.00	$ 2,943.00	10/7/26
J. Co	Concrete				No price increase thru October
JCH	Submersible Sewage Pumps	$ 190,000.00	$ 110,250.00	$ (79,750.00)	Price reduced if packaged overflow station used / BABA price increase on lift station pumps is $13,250

Mammoth Tech	Structural Steel	$ 157,950.00	$ 178,586.00	$ 20,636.00		
Piping Service	Stainless & Carbon Steel Pipe Fab	$ 73,300.00	$ 86,494.00	$ 13,194.00		10/7/26
Yavapai Block	Manholes and Drying Bed LS	$ 45,217.00	$ 48,162.00	$ 2,945.00	updated 9-23-26	
				$ 502,438.81		
		OH&P		15% $ 75,365.82		
			Total	$ 577,804.63		

10/8/26

VE deductions available to the project:

Surface mixers in lieu of submersibles : ($84,560)

HDPE pipe for 12" sewer main in lieu of FPVC. The difference in the raw pipe cost is: ($44,130)

If you have any questions or need to discuss, please contact us.

Kind regards,

Paul Johnson
Operations Director

Fann Environmental L.L.C.
6708 Corsair Ave, Ste A
Prescott, AZ 86301

paulj@fannenvironmental.com

Office (928) 778-5335
Fax (928) 778-5870
Cell (928) 830-7581

License: ROC A-206365, B-249529, K-11-276357

CHANGE ORDER NO.: 1

Owner:	Town of Jerome	Owner's Project No.:	N/A
Engineer:	PACE	Engineer's Project No.:	B614
Contractor:	Fann Environmental, LLC	Contractor's Project No.:	
Project:	Jerome Wastewater Treatment Plant Improvements		
Contract Name:	Jerome Wastewater Treatment Plant Improvements		
Date Issued:	October 22, 2026	Effective Date of Change Order:	October 22, 2026

The Contract is modified as follows upon execution of this Change Order:

Description:

BABA Material Escalations.
Provide surface-mounted mixers in lieu of submersible mixers as a value-engineering modification.
Provide HDPE piping in lieu of FPVC piping as a value-engineering modification.

Attachments:

Email from Fann Environmental, LLC.

Change in Contract Price	**Change in Contract Times [State Contract Times as either a specific date or a number of days]**
Original Contract Price: $ 10,699,947.60	Original Contract Times: Substantial Completion: 300 Ready for final payment: 330
[Increase] [Decrease] from previously approved Change Orders No. 0 to No.0: $ 0	**Increase** from previously approved Change Orders No.0 to No. **0**: Substantial Completion: 0 Ready for final payment: 0
Contract Price prior to this Change Order: $ 0	Contract Times prior to this Change Order: Substantial Completion: 300 Ready for final payment: 330
Increase this Change Order: $ 449,114.63	**Increase** this Change Order: Substantial Completion: 0 Ready for final payment: 0
Contract Price incorporating this Change Order: $ 11,149,062.23	Contract Times with all approved Change Orders: Substantial Completion: 300 Ready for final payment: 330

Recommended by Engineer (if required)	Accepted by Contractor
By:	[signature]
Title:	PRESIDENT
Date:	11-5-2026
Authorized by Owner	**Approved by Funding Agency (if applicable)**
By:	
Title:	
Date:	

EJCDC® C-941, Change Order EJCDC® C-941, Change Order, Rev.1.
Copyright© 2018 National Society of Professional Engineers, American Council of Engineering Companies and American Society of Civil Engineers. All rights reserved.

Outlook

Jerome WWTP BABA Escalation

From Paul Johnson <paulj@fannenvironmental.com>
Date Tue 10/13/2026 4:24 PM
To Taylor Pierce <tpierce@pacewater.com>; Andrea Jaycox <ajaycox@pacewater.com>
Cc Mike Young <mikeyoung@fannenvironmental.com>; Poppy Keegan <pkeegan@fannenvironmental.com>

Taylor,
In regard to our known price escalations for the Jerome WWTP project I have attached a pdf with the original bid price and the cost escalation or deduct (1) as things sit today. As discussed at the meeting this morning the following is our summary of the bid price:

Base Bid	$9,788,382.60
Bid Alternates	$911,565.00
BABA / Material Escalations	$577,804.63
TOTAL BID PRICE	$11,277,752.23

This total already accounts for approximately ($90,000) Fann Environmental has absorbed in the first review for BABA pricing on or about 6-18-26.

Subcontractor/Supplier	Quote For	Original Quote	Revised Quote	Increase	Notes
Aqua-Aerobic Systems	Batch Reactor, Post-EQ, Digester	$ 786,240.00	$ 1,192,070.00	$ 405,830.00	IES Southwest - Ryan Spielman 10-13-26
Border States	Gear	$ 87,780.00	$ 96,256.00	$ 8,476.00	Update 9-30-26 (Eaton & ASCO Gear (MPZ and Loose breakers from Mex & Dom Rep) 37-41 Weeks for SES, 18-20 Weeks BABA Xfmr
	ATS	$ 22,539.00	$ 28,899.00	$ 6,360.00	
	Lighting	$ 32,106.00	$ 35,601.00	$ 3,495.00	
Brown and White	Guardrail	$ 120,581.00	$ 149,936.25	$ 29,355.25	
Darcor	MCP 1 & 2	$ 50,250.00	$ 59,435.00	$ 9,185.00	Estimate - still working with supplier to finalize
Empire CAT	Generator	$ 59,520.00	$ 73,980.00	$ 14,460.00	
Envirodyne Systems	Sludge Pump & Polymer System	$ 246,620.00	$ 256,620.00	$ 13,335.00	per 9/25/26 email from RE Sheker
Field Lining Systems	Liner Procurement and Installation	$ 117,320.00	$ 124,527.00	$ 7,207.00	
Fortiline	Pipe and Fittings	$ 485,365.38	$ 530,132.94	$ 44,767.56	
ISEC Inc	Metal Lab Cabinets w/ Labor & Hardware	$ 30,988.00	$ 33,932.00	$ 2,943.00	10/7/26
J. Co	Concrete				No price increase thru October
JCH	Submersible Sewage Pumps	$ 190,000.00	$ 110,250.00	$ (79,750.00)	Price reduced if packaged overflow station used / BABA price increase on lift station pumps is $13,250

Mammoth Tech	Structural Steel	$ 157,950.00	$ 178,586.00	$ 20,636.00		
Piping Service	Stainless & Carbon Steel Pipe Fab	$ 73,300.00	$ 86,494.00	$ 13,194.00		10/7/26
Yavapai Block	Manholes and Drying Bed LS	$ 45,217.00	$ 48,162.00	$ 2,945.00	updated 9-23-26	
				$ 502,438.81		
		OH&P		15% $ 75,365.82		
			Total	$ 577,804.63		

10/8/26

VE deductions available to the project:

Surface mixers in lieu of submersibles : ($84,560)

HDPE pipe for 12" sewer main in lieu of FPVC. The difference in the raw pipe cost is: ($44,130)

If you have any questions or need to discuss, please contact us.

Kind regards,

Paul Johnson
Operations Director

Fann Environmental L.L.C.
6708 Corsair Ave, Ste A
Prescott, AZ 86301

paulj@fannenvironmental.com

Office (928) 778-5335
Fax (928) 778-5870
Cell (928) 830-7581

License: ROC A-206365, B-249529, K-11-276357

File Attachments for Item:

K. Consider Selection of a New Enterprise Resource Planning (ERP) Financial Software Suite Vendor and Entering into an Agreement with the Selected Vendor for a New ERP System

Council will consider and may approve the selection of a New ERP vendor and authorize the Mayor or Town Manager to execute the agreement on behalf of the Town following legal review.

TOWN OF JEROME

POST OFFICE BOX 335, JEROME, ARIZONA 86331
(928) 634-7943 FAX (928) 634-0715

Founded 1876
Incorporated 1899

STAFF SUMMARY REPORT

FROM: Brett Klein, Town Manager/Clerk

ITEM: **Item: Consider Selecting a Vendor and Entering into an Agreement for a New ERP System**

MEETING DATE: November 10, 2026

Summary:

The Town entered into an agreement for its first true Enterprise Resource Planning (ERP) financial software suite approximately four years ago with Caselle. We have received numerous efficiency benefits compared to our past patchwork systems. However, we have also experienced many problems and our Town appears to be too insignificant for Caselle to bother to fix the issues. One of those issues should have only required a minor fix, but four years later we still have the same issue – revenues listed as expenditures in our budget document headers for some funds. Moreover, support has been less than acceptable with staff often waiting days for a critical issue to be resolved.

The transition to a new ERP is a time-consuming, intensive planning task, which has kept us from following through with a new vendor for a couple of years. However, with the decreasing reliability in support, the failure to fix old issues and the ever-increasing cost from our current vendor, Caselle, the time to transition is now.

There are few ERP's that make sense for a town our size with limited budget resources, while still delivering a robust product with adequate support. Staff sought out to investigate the two most widely used in the southwestern region and throughout Arizona for communities under 25,000 population, who also have systems experience meeting the needs of much larger communities. Staff examined both Tyler Technologies, ERP Pro, and Springbrook Holding Company, LLC, Springbrook ERP. The demonstrations staff participated provided a slight edge to Tyler ERP Pro, and I have worked many years with Tyler Technologies products. The ease of obtaining information, comprehensive reference checks and pricing are in favor of Springbrook. Springbrook would like to continue to gather clients in the State and aggressively priced their product to include the elimination of any up-front implementation costs (generally $50,000-$100,000+).

Fiscal Impact:

Approximately $6,700 more per year than Caselle for the staff-recommended 5-year low overall bidding vendor (Springbrook) with locked in maximum escalations of 5%, compared to the unknown annual increases from Caselle who have averaged approximately that much or more over the last few years.

Recommendation:

Staff recommend entering into the attached agreement with Springbrook.

Order Form: Q-58414-1
Creation Date: 9/8/2026, 7:49 AM
Expires On: 12/25/2026

Phone: (866) 777-0069
Email: info@sprbrk.com

Ship To:
Brett Klein
Town of Jerome
600 Clark Street
Jerome, Arizona 86331
b.klein@jerome.az.gov

Bill To:
Town of Jerome
600 Clark Street
Jerome, Arizona 86331

Account Manager	E-mail	Phone Number	Payment Terms
Alex Webb	alex.webb@sprbrk.com		Net 30

Annual Product Pricing

PRODUCT	RATE	QTY	DISC (%)	NET PRICE
Utility Billing Subscription	USD 16,550.00	1	20.000	USD 13,240.00
Accounts Receivable Subscription	USD 4,600.00	1	21.000	USD 3,634.00
Purchase Orders Subscription	USD 5,150.00	1	21.000	USD 4,068.50
Finance Suite Subscription	USD 15,600.00	1	21.000	USD 12,324.00
Payroll Subscription	USD 8,650.00	1	21.000	USD 6,833.50
			Annual Product Pricing Total:	USD 40,100.00

Estimated Professional Services

PRODUCT	DESCRIPTION	LIST PRICE	NET PRICE	QTY	DISC %	NET PRICE
Standard Professional Services	Standard Professional Services	USD 250.00	USD 0.00	275	100.000	USD 0.00
Standard Professional Services	Standard Professional Services	USD 250.00	USD 0.00	28	100.000	USD 0.00
Standard Professional Services	Standard Professional Services	USD 250.00	USD 0.00	45	100.000	USD 0.00
Standard Professional Services	Standard Professional Services	USD 250.00	USD 0.00	200	100.000	USD 0.00
Standard Professional Services	Standard Professional Services	USD 250.00	USD 0.00	250	100.000	USD 0.00
					Estimated Professional Services Total:	USD 0.00

Grand Total: USD 40,100.00
* excludes applicable sales tax

Order Details

Customer Name:	Town of Jerome
Customer Contact:	Brett Klein
Governing Agreement(s):	This Order Form is governed by the applicable terms found at: MSA: https://sprbrk.app.box.com/v/sprbrk-saas-terms MLA: https://sprbrk.app.box.com/v/sprbrk-onpremise-terms Professional Services: https://sprbrk.app.box.com/v/sprbrk-svcs-terms
Term(s):	5 Years

Order Terms

In the event of an inconsistency between this Order Form, any governing agreement, purchase order, or invoice, the Order Form shall govern as it pertains to this transaction.

- This Order Form shall become effective as of the last date of signature (the "Effective Date").
- Order Start Date: Software Licenses, Subscriptions, Maintenance, and Hosting commence upon the earlier of a) date of delivery* or log-in to hosted software to Customer; or b) 60 days after Order Form Effective Date.
- Subscriptions, Maintenance, Hosting, and Support (“Recurring Services”) continue from the Order Start Date through the term listed in this Order Form (or if not listed, one (1) year).
- Orders for Recurring Services auto-renew for three (3) years or for the term specified in this Order Form, unless the Customer or Springbrook provides a written notice of non-renewal at least sixty (60) days prior to the expiration of the current Order Term.
- Subscription Service fees and any Recurring Services will be subject to an automatic annual increase by not more than five percent (5%) of the prior year’s Subscription Service fees ("Standard Annual Price Increase").
- Any Software Licenses or Hardware are one-time non-refundable purchases.
- CivicPay Online Subscription fee and CivicPay IVR Subscription fee are subject to increase at per account rate, based on actual accounts.
- CivicPay IVR Message Block Subscriptions expire upon the earlier exhaustion of the Message Block or twelve (12) months from the Order Start Date. Upon expiration, Message Blocks automatically renew.

** The date of delivery of software to the Customer is the date the software is made available to the Customer, either by delivery of software or delivery of first log-in to a hosted environment, which may be either a test or production environment. This date of delivery is frequently earlier than the dates professional services are completed, the Customer completes user acceptance testing, the Customer distributes additional logins to end-users, and the Customer go-live in a production environment.*

Invoice Timing and Delivery

Invoices are delivered electronically via e-mail to the billing contact on file for the Customer. Customer invoices are issued for the full amount of software and services purchased as follows:

Products Ordered	Invoice Timing
Software Licenses, Subscriptions, Maintenance, and Hosting (New):	Annually in advance upon Order Start Date.
Software Subscriptions, Maintenance, and Hosting (Add-Ons):	Upon the order start date, order will be pro-rated to sync with the existing anniversary billing date and will renew annually thereafter.
Software Subscriptions (Migrations):	Upon the order start date, order will be synced with the existing anniversary billing date and will renew annually thereafter unless specified in the Special Order Terms. This order replaces and supersedes any previously executed order as it relates to the products listed within this order. Upon delivery of new product, customer will receive a prorated credit for any prepaid, unused maintenance fees that will be applied to the customer's first invoice.
Software Licenses, Subscriptions, Maintenance, and Hosting (Renewal):	Sixty (60) days in advance of the Order Start Date.
Print Services and Transaction Fees:	Monthly, in arrears for transactions in the prior month.
Hardware and One-Time Licenses:	Upon the Effective Date of this Order Form.
Estimated Time and Material Professional Services, On- Site Professional Services, and Travel Expenses*:	Monthly, in arrears for services in the prior month unless specified in Special Term.
Implementation Fixed Fee Professional Services:	The Effective Date of this Order Form unless specified in Special Terms.

Professional Service Key Terms and Conditions:

- **Time and Material Pricing:** Professional Services time and material pricing is based on expected hours using Springbrook's standard implementation approach. While our goal is to provide accurate hour estimates, there may be variations in actual hours and charges. If project costs surpass the estimated hours within this order form by the greater of $15,000 or 20%, a signed change order is necessary to proceed. Adjustments below this threshold will be implemented and invoiced as incurred.

- ***On-Site Professional Services:** On-Site professional services are billed at a daily minimum rate, regardless of time spent on-site. Travel expenses related to on-site travel will be invoiced as a separate line item as they are incurred.

- **Cancellation or Postponement:** Customer agrees to participate in all scheduled meetings and minimize repeated cancellations. Customer shall provide no less than two (2) business days' written notice should any scheduled meeting, training session or other activity need to be cancelled or postponed. If Customer fails to provide such notice, Springbrook shall invoice the Customer for the lost or delayed scheduled time, with a minimum charge of two (2) hours. Additional charges may apply based on the resources and preparation required for the meeting.

- **Customer Responsibilities:** The customer will provide adequate internal resources and ensure the accuracy of all information provided to Springbrook. Customers are responsible for extracting data from any legacy systems and transferring the data into Springbrook's import templates.

Special Order Terms

Special Order Terms (if any):
The Customer agrees that the current version of Cirrus will be implemented without any modifications to its standard functionality, features, or reports. The Customer understands and accepts that no additional enhancements, customizations, or development efforts will be undertaken as part of this project. The Customer also agrees to adapt its business processes as necessary to align with the capabilities of the Cirrus application. Cirrus will be delivered and installed strictly on an "as-is" basis.
Any discounts applied under this Quote are one-time, non-recurring discounts and apply solely to the specific order referenced herein. Such discounts shall not be construed as establishing a course of dealing, precedent, or entitlement for any future orders. All subsequent orders for products or professional services will be billed at the then-current list price. This Quote does not obligate Springbrook to extend the same or similar discounts in connection with any future orders.

By signing, both parties agree to the terms and conditions set forth in this agreement.

* If the Customer requires a PO number on invoices, the Customer must provide Springbrook with the PO number and a copy of the PO prior to invoice issuance. If a PO number is not provided prior to the invoice issuance date, invoices issued on this Order Form will be valid without a PO reference.

Springbrook Holding Company, LLC	**Town of Jerome**
Signature:	Signature:
Name (Print):	Name (Print):
Title:	Title:
Date:	Date:

Approved as to form:

SPRINGBROOK CLOUD SERVICE
MASTER AGREEMENT
TERMS AND CONDITIONS

These Terms and Conditions, together with each Order Form entered into by the Parties that references such Terms and Conditions, constitute a binding agreement ("**Agreement**") by and between Springbrook Holding Company, LLC, a Delaware corporation and its Affiliates ("**Springbrook**") and the Customer identified on the Order Form ("**Customer**"). These Terms and Conditions become effective as of the date of the related Order Form or use of the Springbrook Services. Each of Springbrook and Customer is referred to herein individually as a "**Party**" and collectively as the "**Parties**."

Use of the Cloud Service, as defined below, is subject to the Agreement. If Customer is entering into the Agreement on behalf of a company, organization, or another legal entity (an "**Entity**"), Customer is agreeing to this Agreement for that Entity and representing to Springbrook that it has the authority to bind such Entity to the Agreement.

Recitals

WHEREAS, Springbrook has developed an ERP solution for local government agencies that is offered as a SaaS-based cloud service (the "**Cloud Service**"); and

WHEREAS, Customer is interested in obtaining the functionality provided by the Cloud Service;

NOW THEREFORE, in consideration of the mutual promises set forth herein, and for other good and valuable consideration, the receipt and sufficiency of which are hereby acknowledged, the Parties hereby agree as follows:

Agreement

1. Definitions. Certain capitalized terms used in the Agreement shall have the definitions set forth below.

(a) **Affiliate**: means an entity that controls, is controlled by or is under common control with a Party to the Agreement, where control means the legal or beneficial ownership of more than fifty percent (50%) of the voting shares of an entity or the ability to direct or cause the direction of management and policies of such entity.

(b) **Authorized User:** means one individual natural person, authorized by Customer to use the Cloud Service. Authorized Users may include but are not limited to Customer's employees, contractors and agents. Each Authorized User will be associated with a single unique email address and password for purposes of accessing (and being identified within) the Cloud Service.

(c) **Channel Partner**: means an authorized reseller, distributor, or other channel partner of Springbrook from which Customer is able to procure some or all of the Springbrook Services.

(d) **Cloud Software**: means the Springbrook proprietary software, in object code format, including Documentation, updates, patch releases, and upgrades with respect thereto, that Springbrook makes available for download or otherwise provides for use in connection with the Cloud Service. Cloud Software excludes any OSS and other third-party's software. If and as designated in the Specifications, the Cloud Software may be inclusive of application programming interfaces ("APIs") developed by Springbrook to enable interaction and integration with the Cloud Service.

(e) **Cloud Specifications:** means the online specifications for the Cloud Service, as made available by Springbrook at https://sprbrk.box.com/v/sprbrk-software-specs (which URL location and content may be updated from time to time by Springbrook).

(f) **Confidential Information**: means nonpublic, confidential, or proprietary information regarding either Party's business or any aspect of this Agreement, including, without limitation, technology, proprietary data compilations, computer source codes, compiled or object codes, scripted programming statements, byte codes or data codes, entity-relation or workflow diagrams, product plans, pricing, customer information and other technical, financial, marketing and business information. Information that is marked or identified as confidential or proprietary or that would reasonably be considered to be confidential based on the nature of such information and the circumstances under which it is disclosed shall be deemed to constitute Confidential Information. Confidential Information may include confidential or proprietary information of third parties that the Disclosing Party is permitted to disclose, and does disclose, to the Recipient hereunder. Confidential Information may be presented to Recipient in oral, written, graphic, and/or machine-readable formats. Regardless of presentation format, such information will be deemed and treated as Confidential Information. Notwithstanding the above, "Confidential Information" shall not include information that: (i) the Recipient can demonstrate was in its possession at the time of disclosure and was not acquired by the Recipient directly or indirectly from the Disclosing Party on a confidential basis; (ii) becomes available to the Recipient on a non-confidential basis from a source other than Disclosing Party (whether directly or indirectly) and which source to the best of Recipient's knowledge did not acquire the information on a confidential basis; (iii) is approved for release or use without restriction by written authorization of an officer of the Party owning the Confidential Information; (iv) is independently developed by or for the Recipient without use of the Disclosing Party's Confidential Information; (v) subject to mandatory disclosure pursuant to a state's public records laws, or (vi) has become generally available to the public without breach of this Agreement by the Recipient or an affiliate of the Recipient.

(g) **Customer:** means the entity that purchases a Subscription to the Cloud Service directly from Springbrook or through a Channel Partner.

(h) **Customer Data:** means any and all content, eDocuments, materials, data and information that Customer or its Authorized Users, or others who input data into the Cloud Service, such as citizens of the jurisdiction to which Customer provides services, enter into the Cloud Service including but not limited to, personal information, information exchanged between Customer and an Authorized User or an Authorized User and a third party using the Cloud Service, information used to identify account names or numbers, routing information, usernames, passwords, access codes and prompts.

(i) **Disclosing Party:** means a Party that discloses Confidential Information to a Recipient.

(j) **Documentation**: means information describing the features, functionality, operating instructions and other aspects of the Cloud Service or Cloud Software. Information contained on Springbrook's publicly facing website does not constitute Documentation.

(k) **Effective Date**: means the date of the first Order Form that is governed by these Terms and Conditions.

(l) **Fees**: means amounts payable by Customer to Springbrook as consideration for the Springbrook Services.

(m) **Intellectual Property Rights:** means any and all rights existing now or in the future under laws relating to patents, copyright, industrial design, moral rights, trade secrets, trademarks, publicity rights, and any and all similar proprietary rights, and any and all applications for registration, letters patent, renewals, extensions, divisions, continuations, reissues, and restorations thereof, now or hereafter in force and effect anywhere in the world.

(n) **Maintenance and Support Services:** means Springbrook's obligations related to availability, error resolution, response to support requests, bug fixes, and the provision of updates and upgrades to the Cloud Software or Cloud Service as further described in Exhibit A hereto.

(o) **Online Payments Schedule:** means service-specific terms and conditions applicable to the Springbrook Online Payments software, attached hereto as Exhibit B.

(p) **Open Source Software** or **OSS:** means software components that are licensed under a license approved by the Open Source Initiative or similar open source or freeware license and may be embedded in the delivered Cloud Software.

(q) **Optional Cloud Services**: mean the optional add-ons to the Cloud Service that may be available for purchase either directly from Springbrook or through Channel Partner, as more particularly described or identified in the applicable Order.

(r) **Order Form**: means a purchase document executed by Customer and Springbrook in which Customer orders Springbrook Services.

(s) **Order Terms**: means the ordering information (such as order date, products, quantity and similar information) and terms and conditions specified on an Order Form.

(t) **Personal Information:** means any data that can identify or locate an individual.

(u) **Professional Services**: means services relating to the Cloud Service, such as implementation, customization, and training.

(v) **Recipient**: means a Party that receives Confidential Information from a Disclosing Party.

(w) **Springbrook Services**: means the Cloud Service, Cloud Software, Maintenance and Support Services, and Professional Services.

(x) **Subscription**: means a paid for right to access and use the Cloud Service.

(y) **Subscription Period(s):** means the duration of a Customer's and its Authorized Users' active, paid Subscription to the Cloud Service, as designated in the Order Form(s).

(z) **Supported Modification:** means a configuration of or modification to the Cloud Service requested by Customer that can be consistently supported by Springbrook via APIs, does not require direct database changes and is capable of being tested and maintained by Springbrook.

(aa) **Term:** shall be the period of time for which this Agreement is in effect, as further set forth in Section 13. Term is different from a Subscription Period.

(bb) **Third Party Services:** means products, services, technology, and methods other than proprietary Springbrook Services.

2. Cloud Service Terms and Conditions.

(a) Subject to compliance with the terms and conditions of the Agreement, including advance receipt of applicable Fees, Springbrook will make the Cloud Service available to Authorized Users during the Subscription Period for use in connection with the internal business purposes of Customer.

(b) Springbrook hereby grants to Customer a limited, non-exclusive, non-transferrable right to access, implement, and configure the Cloud Software during the Subscription Period, solely for its internal business purposes in connection with use of the Cloud Service and in accordance with the Specifications.

(c) Customer will ensure that all of its Authorized Users using the Cloud Services under its account comply with all of Customer's obligations under this Agreement. Customer is responsible for all activity (whether or not authorized by Customer) occurring under Customer's account, including acts and omissions of its Authorized Users and individuals using credentials of Authorized Users, as though they were those of Customer. Customer will notify Springbrook promptly of any unauthorized access or use of the Springbrook Services.

(d) Customer will be responsible for meeting minimum system requirements for use of the Cloud Service accessible at https://sprbrk.box.com/v/sprbrk-minimum-requirements (which URL location and content may be updated from time to time by Springbrook) for use of the Cloud Service;

(e) Customer will use the Springbrook Services only in accordance with the Agreement, the applicable Documentation, laws and government regulations, and any written instructions provided by Springbrook to Customer.

(f) The Cloud Service is provided with a limit of five hundred gigabytes (500GB) of data storage for all cloud environments. Additional storage can be purchased from Springbrook by Customer in blocks of five hundred megabytes (500MB), with a price of one thousand dollars ($1,000) per year. If a Subscription Period for the Cloud Service is nearing its expiration date or is otherwise terminated, Springbrook will initiate its data retention processes, including the deletion of Customer Data from systems directly controlled by Springbrook. Springbrook's Data Storage Policy can be accessed at https://sprbrk.box.com/v/sprbrk-data-storage-policy (which URL location and content may be updated from time to time by Springbrook).

3. **Restrictions on Use of the Cloud Service and Cloud Software.** Except as otherwise expressly provided in the Agreement (including any Exhibits), Customer shall not (and shall not permit any Authorized User or third party to):

(a) make the Cloud Service available to anyone other than Authorized Users;

(b) use the Cloud Service, or allow access to it, in a manner that circumvents contractual usage restrictions or that exceeds Customer's authorized use or usage metrics as set forth in the Agreement, including the applicable Order Form(s);

(c) sublicense, sell, resell, transfer, assign, distribute, share, lease, make any external commercial use of, outsource, use on a timeshare or service bureau basis, or use in an application service provider or managed service provider environment, or otherwise generate income from, the Springbrook Services;

(d) modify, obscure, alter, or remove any confidentiality or proprietary rights notices contained in the Springbrook Services;

(e) decompile, disassemble, or reverse engineer any portion of the Cloud Software or Cloud Service, or attempt to discover any source code or other operational mechanisms of the Cloud Software or Cloud Service (except where such restriction is expressly prohibited by law without the possibility of waiver, and then only upon prior written notice to Springbrook);

(f) use any third-party software provided with the Cloud Software or Cloud Service other than in connection with the Cloud Software or Cloud Service;

(g) use the Springbrook Services in violation of any applicable laws and regulations;

(h) use the Springbrook Services to (1) store, download or transmit infringing, libelous, or otherwise unlawful or tortious material, or malicious code or malware, or (2) engage in phishing, spamming, denial-of-service attacks, spreading viruses or other harmful code, or other fraudulent or criminal activity, (3) interfere with or disrupt the integrity or performance of third party systems, the Cloud Software, Cloud Service or data contained therein, (4) violate or infringe upon the rights of a third party, including those pertaining to contract, intellectual property, privacy, or publicity, or (5) attempt to gain unauthorized access to the Cloud Software or Cloud Service;

(i) access or use the Springbrook Services (inclusive of any APIs) for the purpose of developing or operating products or services intended to be offered to third parties in competition with the Cloud Service or allow access by a direct competitor of Cloud Service;

(j) access the Springbrook Services for purposes of monitoring availability, penetration, or security testing, or any benchmarking;

(k) obtain or attempt to obtain intellectual property rights to any component of the Springbrook Services (inclusive of APIs) other than those expressly provided herein;

(l) create derivative works based on the Springbrook Services;

(m) use or allow the use of, the Springbrook Services by anyone located in, under the control of, or that is a national or resident of a U.S. embargoed country or territory or by a prohibited end user under

export control laws of the United States or any other applicable jurisdiction.

4. **Customer Cooperation**. Customer is responsible for selecting Authorized Users and represents and warrants it shall select Authorized Users who are qualified to operate the Cloud Service and are familiar with the information, calculations, and reports that serve as input and output. Any data entry errors are the responsibility of Customer and Springbrook does not assume the cost of any necessary servicing, repair or correction arising from such errors. Customer acknowledges that successful installation, implementation and use of the Springbrook Services cannot be accomplished by Springbrook's efforts alone and requires substantial effort and cooperation by Customer. Both Springbrook and Customer shall at all times use their best efforts to actively participate and cooperate in data conversion, system installation, implementation, training and use, shall provide each other accurate and timely information, and shall afford each other reasonable access to information and facilities. All substantive communication between Springbrook and Customer will take place between Springbrook and a project manager designated by Customer.

5. **Third Party Services.** Customer may choose to obtain products and services that are provided or supported by third parties ("**Third-Party Services**") for use in conjunction with the Springbrook Services either directly from the third party providing the Third Party Services or indirectly through Springbrook where Springbrook acts as a reseller of the Third Party Services. Third Party Services may require Customer to enter into a license or other agreement with such third party for use of the Third-Party Services. Customer is solely responsible for obtaining any such license or other agreement for the Third--Party Services. CUSTOMER EXPRESSLY ACKNOWLEDGES AND AGREES THAT THIRD-PARTY SERVICES ARE PROVIDED PURSUANT TO THE TERMS OF THE APPLICABLE THIRD-PARTY LICENSE OR SEPARATE AGREEMENT (IF ANY) BETWEEN THE PROVIDER OF THE THIRD-PARTY SERVICES AND CUSTOMER, CUSTOMER MAY SEEK REDRESS FOR USE OF THE THIRD-PARTY SERVICES SOLELY FROM THE THIRD PARTY PROVIDING THE THIRD-PARTY SERVICES, AND SPRINGBROOK ASSUMES NO RESPONSIBILITY FOR, AND SPECIFICALLY DISCLAIMS ANY LIABILITY OR OBLIGATION WITH RESPECT TO, ANY THIRD-PARTY SERVICE.

6. **Maintenance and Support Terms.**

(a) Support. Maintenance and Support Services, as described in Exhibit A, are included in the Cloud Service Subscription for no additional fees, except as provided otherwise in Exhibit A.

(b) Partner Support. Notwithstanding anything herein to the contrary, if Customer receives Maintenance and Support Services from an authorized Channel Partner, then the terms for such services agreed upon by Customer and such Channel Partner shall govern in lieu of those set forth in the Exhibit A attached hereto, and Springbrook shall have no support obligations to Customer.

7. **Ordering Process**.

(a) Order Forms. Customer may purchase the Springbrook Services (Cloud Service Subscriptions, Cloud Software licenses or Professional Services) by executing and submitting an Order Form. Execution of an Order Form referencing these Terms and Conditions makes them binding upon Customer, as does any access or use of the Springbrook Services. Upon execution of an Order Form by both Parties and subject to Customer's payment of the corresponding Fees, Springbrook will make the Cloud Service or Cloud Software, as applicable, available to Customer. Any terms and conditions contained in any quote, invoice, or purchase order that are inconsistent with or are in addition to the terms and conditions of the Agreement will be deemed stricken, unless expressly agreed to in writing by

Springbrook with explicit reference to the accepted terms and conditions. Upon acceptance of an Order Form, it will become part of the Agreement and will supersede any conflicting terms herein.

(b) No Requirement for Purchase Order. Customer acknowledges that a purchase order is not required and is for administrative convenience only, and that Springbrook has the right to issue an invoice and collect payment without a corresponding purchase order, provided, however, that if a Customer's procurement procedure requires the issuance of a purchase order or a purchase order number on a pertinent Order Form or Statement of Work, the purchase order is required to be provided to Springbrook. If the Customer issues a purchase order, then it shall be for the full amount set forth in the applicable Order Form or Statement of Work.

8. Payment Terms.

(a) Pricing. Customer will be invoiced for those amounts and at those prices set forth in an Order Form. Fees do not include any customization of the Cloud Software or Cloud Service (nor support for any such customizations, unless otherwise agreed in writing). If Customer's usage of the Cloud Software or Cloud Service is in excess of those amounts set forth in the Order Form, Customer may be billed for those overages. Customer acknowledges that purchases under the Agreement are neither contingent on the delivery of any future functionality or features nor dependent on any oral or written public comments made by Springbrook regarding future functionality or features of the Springbrook Services. Except as otherwise specified herein or in an Order Form, (i) fees are based on the specified Springbrook Services purchased, (ii) payment obligations are noncancelable and fees paid are non-refundable, except for amounts paid in error that are not actually due under the Agreement or as otherwise expressly provided herein, and (iii) quantities purchased cannot be decreased during the relevant Subscription Period.

(b) Payments. Springbrook will invoice Customer in advance for the Cloud Service. Customer shall pay Invoices within thirty (30) days of the invoice date. If Customer orders additional Subscription quantities or services part-way through an existing Subscription Period the initial Subscription Period for the additional quantity or services will be made coterminous with the existing Subscription Period and the Cloud Service Fee for such additional quantity will be prorated accordingly. Fees for Optional Cloud Service will be due at the same time as payment for the corresponding Cloud Service, or (if applicable) as otherwise specified in the applicable Order Form or governing terms. Customer is responsible for keeping Springbrook accurately and fully informed of Customer's billing and contact information, including providing any purchase order numbers in advance of invoice issuance. Springbrook shall have no responsibility for any invoices that are not received due to inaccurate or missing information provided by Customer. Customer shall pay interest on all payments not received by the invoice due date set forth above at a rate of one and a half percent (1.5%) per month or the maximum amount allowed by law, whichever is lower. All amounts due under this Agreement shall be paid by Customer in full without any set-off, counterclaim, deduction or withholding. Subscription Fees will be subject to an automatic annual increase in the amount set forth in the applicable Order Form. ("**Standard Annual Price Increase**"). Notwithstanding anything herein to the contrary, if Customer makes its payments pursuant to this Agreement to a Channel Partner, then the payment terms agreed by Customer and such Channel Partner shall govern to the extent anything in this Section 8 conflicts with such payment terms.

(c) Taxes. Fees for Springbrook Services do not include any taxes, levies, duties or similar governmental assessments of any nature, including but not limited to value-added, sales, use or withholding taxes, assessable by any local, state, provincial, federal or foreign jurisdiction (collectively, "**Taxes**"). Customer is responsible for paying all Taxes. If Springbrook has the legal obligation to pay or collect Taxes for which Customer is responsible under this paragraph, the appropriate amount will be invoiced to and paid by Customer, unless Customer provides Springbrook with a valid tax exemption certificate authorized by the appropriate taxing authority prior to invoice issuance. For clarity, Springbrook is solely responsible for taxes assessable against it based on Springbrook's income, property and employees.

(d) Suspension of Service. If any amount owing by the Customer for the Cloud Service is ninety (90) or more days delinquent, Springbrook may, in its sole discretion and cumulative to its other remedies under this Section, temporarily cease providing to Customer the Cloud Service.

9. Ownership.

(a) Ownership of Springbrook Services. As between Springbrook and Customer all right, title and interest to the Cloud Software, the Cloud Service, all technology underlying the foregoing, the Documentation, any improvements, design contributions, updates, or derivative works thereto, any knowledge or processes related thereto and/or provided hereunder, and all associated Intellectual Property Rights, belong solely to Springbrook, and is protected under the laws of the United States and the individual states and by international treaty provisions. Springbrook reserves all rights not granted herein.

(b) Limited Rights. Customer shall only receive those rights in the Springbrook Services that are expressly granted to it hereunder. Customer acknowledges that the rights granted under this Agreement, as they pertain to Maintenance and Support and to the Cloud Software and Cloud Service, do not provide Customer with title to or ownership of the Cloud Software or Cloud Service.

10. Feedback. Customer grants Springbrook a royalty-free, fully-paid, worldwide, transferable, sub-licensable, irrevocable, perpetual license to use or incorporate into the Springbrook Services (or Springbrook's other software or services) any suggestions, enhancement requests, recommendations, or other feedback provided by Customer or Authorized Users relating to the operation or features of the Springbrook Services.

11. Security.

(a) Customer Responsibilities. Information or data generated by the Cloud Service, that is provided to, and stored by, the Customer, is the sole responsibility of the Customer. Springbrook shall not be responsible for the theft, misappropriation, loss, or misuse of personal or entity related financial information, utility billing records, or any other financial information stored in Customer controlled electronic media or physical storage locations. Customer acknowledges that Customer is solely responsible for the Customer's security procedures, including but not limited to password security, encryption of sensitive information, proper handling of payroll

ACH files, physical custody of cash, internal audit procedures and processes, annual reporting, and proper training in security and backup procedures. In addition, the Customer and its related entities and affiliates agree to indemnify and hold harmless Springbrook, its contractors and agents from all costs, damages, expense and attorney's fees incurred in the event of any security breach, theft, misappropriation, loss, misuse of personal or entity related financial information, or other related incident.

(b) Security Breaches. Customer acknowledges that, notwithstanding the security features of the Cloud Service, no product, hardware, software or service can provide a completely secure mechanism of electronic transmission or communication and that there are persons and entities, including enterprises, governments and quasi-governmental actors, as well as technologies, that may attempt to breach any electronic security measure. Subject only to its limited warranty obligations set forth in Section 14, Springbrook will have no liability for any security breach caused by any such persons, entities, or technologies.

(c) Customer Data. Customer shall be responsible for Customer Data as entered in to, applied or used in the Cloud Service. Customer is responsible for ensuring the accuracy, quality, integrity and legality of Customer Data. Customer grants to Springbrook the non-exclusive right to process Customer Data (including personal data) for the sole purpose of and only to the extent necessary for Springbrook: (i) to provide the Springbrook Services; (ii) to verify Customer's compliance with the restrictions set forth in Section 3 (Restrictions on Use of the Cloud Service and Cloud Software) if Springbrook has a reasonable belief of Customer's non-compliance; and (iii) as otherwise set forth in this Agreement, including the Springbrook Privacy Policy. Springbrook may utilize the information concerning Customer's use of the Cloud Service (excluding any use of Customer's personal data or Customer's Confidential Information) to improve the Cloud Service, to provide Customer with reports on its use of the Cloud Services, and to compile aggregate statistics and usage patterns by customers using the Cloud Services. Customer represents and warrants that it owns or has full and unrestricted rights and authority to effectuate the grants set forth in this Section and there are no third parties who may claim rights or interests in the Customer Data or otherwise hinder such grants.

(d) Use of Aggregate Data. Customer agrees that Springbrook may collect, use, and disclose quantitative data derived from the use of the Cloud Service for industry analysis, benchmarking, analytics, marketing, and other business purposes. All disclosed data will be in aggregate form only and will not identify Customer, its Authorized Users, or any third parties utilizing the Cloud Service.

12. Confidentiality.

(a) Confidentiality Term. The obligations described in this Section commence on the Effective Date and will continue until two (2) years following any termination or expiration of this Agreement ("**Confidentiality Term**").

(b) Confidentiality Obligations. During the Confidentiality Term and subject to the other terms of this Agreement (including Springbrook's Privacy Policy, accessible at https://sprbrk.box.com/v/sprbrk-privacy-policy, which URL and its content may be updated from time to time by Springbrook), Recipient will protect the confidentiality of Confidential Information using the same degree of care that it uses to protect its own information of similar importance, but will in any case use no less than a reasonable degree of care to protect Confidential Information. Recipient will not directly or indirectly disclose Confidential Information or any part thereof to any third party without Disclosing Party's advance express written authorization to do so. Recipient may disclose Confidential

Information only to its employees, contractors or advisors on a need-to-know basis and who are bound by confidentiality and non-use restrictions at least as stringent as those contained herein. In responding to a request for Confidential Information, Recipient will cooperate with Disclosing Party, in a timely fashion and in a manner consistent with applicable laws, to protect the Confidential Information to the fullest extent possible.

(c) Legally Compelled Information. In the event the Recipient becomes legally compelled (by deposition, interrogatory, requests for documents, subpoena, civil investigative demand or similar process) to disclose any of the Confidential Information, or the Recipient determines that it is obligated by law, rule, statute or governmental regulation to disclose any of the Confidential Information, the Recipient shall provide the Disclosing Party with prompt written notice of such requirement so that the Disclosing Party, if possible, may seek a protective order or other appropriate remedy and/or waive compliance with the terms of this Agreement. In the event that such protective order or other remedy is not obtained, the Recipient agrees to furnish only that portion of the Confidential Information that it is legally required to furnish and to exercise reasonable efforts to obtain assurance that confidential treatment will be accorded such Confidential Information. A Party's obligations hereunder with respect to legally compelled information shall continue to be applicable for all other purposes.

(d) Publicity. During the term of this Agreement, including the term of any amendment hereto, Springbrook may publicly disclose its ongoing business relationship with Customer. Such disclosures may indicate Customer's identity and the Springbrook Services provided or contracted to be provided to Customer. These disclosures may include press releases or other communications to media, display on Springbrook web sites, or use in other marketing activities, but will not include non-public information or indicate Customer's express endorsement of Springbrook's products or services without Customer's prior written authorization.

13. Term and Termination.

(a) Term. The term of this Agreement begins on the Effective Date and will remain in effect until all Cloud Service Subscriptions expire or until this Agreement is otherwise terminated in accordance with the terms hereof, whichever occurs first (the "**Term**"). Except as otherwise specified in the applicable Order Form, all Cloud Service Subscriptions will have an initial three (3) year term and then automatically renew for successive three (3) year terms unless otherwise stated in the applicable order form, provided that either party may terminate this Agreement effective upon the expiration of the Subscription Period, by notifying the other party in writing at least sixty (60) days prior to the expiration of the Subscription Period. Cancellation notices should be sent to operations@sprbrk.com. This Agreement may be renewed at any time by execution of an Order Form referencing this Agreement, and any such renewal will be deemed part of the "Term" hereunder. Subject to Section 8(b) (Payments), pricing increases will be effective upon renewal of the Subscription Period and annually thereafter.

(b) Termination. Springbrook or Customer may terminate the Agreement if the other party materially breaches a material provision thereof, including associated Order Form(s), and, after receiving a written notice describing the circumstances of the default, fails to correct the breach within thirty (30) calendar days. Springbrook may immediately terminate this Agreement and/or Customer's Cloud Service Subscription or license to the Cloud Software upon Customer's breach of Section 3 (Restrictions on Use of the Cloud Service and Cloud Software). Either Party may also terminate the Agreement upon written notice if the other party suspends payment of its debts or experiences any

other insolvency or bankruptcy-type event.

(c) Effect of Termination. Upon expiration or termination of this Agreement for any reason, (i) Customer shall immediately pay any amounts then owing to Springbrook; (ii) the right to access the Cloud Service or Cloud Software will end; and (iv) each Recipient will return or destroy, at the Disclosing Party's option, the Disclosing Party's Confidential Information in the Recipient's possession or control.

(d) Other Termination. Springbrook may terminate this Agreement in the event the Cloud Software or Cloud Service, as applicable, is phased out across Springbrook's customer base. In such event, Springbrook will provide Customer sufficient advance notice and the parties will mutually agree to a migration plan for converting Customer to another Springbrook generally-available offering with comparable functionality.

(e) Survival. All fees that have accrued as of such expiration or termination, and Sections 1, 5, 8, 9-12, 13(c), 14(d), 15, 16 and 17 will survive any expiration or termination hereof.

14. Warranties.

(a) Mutual Warranties. Each Party represents and warrants that: (a) this Agreement has been duly executed and delivered and constitutes a valid and binding agreement enforceable against it in accordance with the terms of the Agreement; (b) the Agreement does not conflict with any other agreement or arrangement to which a Party is bound, and (c) no authorization or approval from any third party is required in connection with its execution, delivery, or performance of this Agreement.

(b) Limited Warranty. Subject to the limitations set forth below, Springbrook warrants that during the Subscription Period, the Cloud Service will, in all material respects, operate in conformity with the then-current Cloud Specifications for the applicable Cloud Service version. Springbrook's sole and exclusive obligation, and Customer's sole and exclusive remedy, for a breach of this warranty shall be that Springbrook shall be required to use commercially reasonable efforts to modify the Cloud Service to conform in all material respects to the Specifications. Customer further acknowledges that the Cloud Service is not guaranteed to operate without interruptions, failures, or errors. Springbrook will not be responsible to the extent failure of the Cloud Service to operate as warranted is caused by or results from: (i) any modification to the Cloud Service other than a Supported Modification; (ii) combination, operation or use of the Cloud Service with Customer's or Third Party Services, software or systems;

(iii) abuse, willful misconduct, or negligence by anyone other than Springbrook or Springbrook's designee; (iv) installation, configuration and use of the Cloud Service other than in accordance with the terms of this Agreement and/or the applicable Specifications and Documentation or (v) any of the Exclusions (as defined in the Cloud Service Level Commitment).

(c) Subscription Service Level Commitment. During the Subscription Period, Springbrook warrants that the Subscription Service will meet the performance level specified in Exhibit A, which sets forth Customer's sole and exclusive remedy for Springbrook's failure to achieve the stated Cloud Service performance level.

(d) Warranty Disclaimer. EXCEPT AS EXPRESSLY PROVIDED IN THIS SECTION 14, ALL SPRINGBROOK SERVICES ARE PROVIDED "AS IS" AND SPRINGBROOK AND ITS SUPPLIERS EXPRESSLY DISCLAIM ANY

AND ALL OTHER REPRESENTATIONS AND WARRANTIES, EITHER EXPRESS, IMPLIED, STATUTORY, OR OTHERWISE WITH RESPECT THERETO, INCLUDING ANY IMPLIED WARRANTY OF MERCHANTABILITY, FITNESS FOR A PARTICULAR PURPOSE, NON-INFRINGEMENT, OR THE CONTINUOUS, UNINTERRUPTED, ERROR-FREE, VIRUS-FREE, OR SECURE ACCESS TO OR OPERATION OF THE SPRINGBROOK SERVICES. SPRINGBROOK EXPRESSLY DISCLAIMS ANY WARRANTY AS TO THE ACCURACY OR COMPLETENESS OF ANY INFORMATION OR DATA ACCESSED OR USED IN CONNECTION WITH THE SPRINGBROOK SERVICES OR MAINTENANCE AND SUPPORT OR THAT THE SPRINGBROOK SERVICES WILL BE COMPATIBLE OR WORK WITH ANY CUSTOMER OR THIRD-PARTY SOFTWARE OR HARDWARE.

15. Mutual Indemnification.

(a) Indemnification by Customer. Customer will defend (or settle), indemnify and hold harmless Springbrook, its officers, directors, employees and subcontractors, from and against any liabilities, losses, damages and expenses, including court costs and reasonable attorneys' fees, arising out of or in connection with any third-party claim: (i) that a third party has suffered injury, damage or loss resulting from Customer's or any Authorized User's use of the Software or Cloud Service, or (ii) arising from allegations that Customer has used the Software or Cloud Service in a manner that violates this Agreement or applicable law, or (iii) in connection with the nature and content of Customer Data processed by the Software or Cloud Service.

(b) Indemnification by Springbrook.

(i) Intellectual Property Indemnification. Subject to the terms and conditions of this Section 15, Springbrook will (a) defend at its expense any filed lawsuit (a "**Claim**") brought against Customer by a third party (the "Claimant") to the extent such Claim alleges that the Cloud Service or Cloud Software provided by Springbrook to Customer hereunder violates or infringes the Claimant's patents, trademarks or copyrights or misappropriates the Claimant's trade secrets (collectively, "**IP Rights**"), and (b) either (i) indemnify Customer with respect to any final, non-appealable judgments, costs, fines or penalties awarded, entered or assessed against Customer by a court of competent jurisdiction that directly result from a Claim, or (ii) pay the value of any settlement with the Claimant agreed to by Springbrook.

(ii) Springbrook Options. If a temporary or permanent injunction is obtained against the use of any part of the Cloud Service or Cloud Software for the reason that they infringe or misappropriate any third party's IP Rights or there is a reasonable likelihood of such an injunction, Springbrook may at its option (a) modify the Cloud Service or Cloud Software to avoid the allegation of infringement, (b) obtain for Customer the right to continue using the Cloud Service or Cloud Software, or (c) replace the allegedly infringing Cloud Service or Cloud Software with non-infringing and functionally equivalent technology. In the event that none of the foregoing is commercially reasonable, Springbrook may terminate Customer's right to use the allegedly infringing portion of the Cloud Service or Cloud Software.

(iii) Exclusions. Springbrook will not be liable or have any obligations hereunder for any infringement of IP Rights resulting from (a) the combination, utilization or integration of the Cloud Service or Cloud Software with Customer's or any third party's products or technology, (b) compliance with Customer's designs, specifications or instructions; (c) unauthorized modification of the Cloud Service or Cloud Software by any entity other than Springbrook, (d) use of the Cloud Service or Cloud Software other than as specified in Springbrook's published specifications and

documentation, (e) Customer's failure to incorporate updates or upgrades that would have avoided the alleged infringement; or (f) Customer's breach of the Agreement.

(iv) THIS SECTION 15 STATES THE ENTIRE OBLIGATION OF SPRINGBROOK, ITS AFFILIATES AND ITS LICENSORS WITH RESPECT TO ANY ALLEGED OR ACTUAL INFRINGEMENT OR MISAPPROPRIATION OF IP RIGHTS BY THE CLOUD SOFTWARE, CLOUD SERVICE OR ANY OTHER SPRINGBOOK SERVICES.

(c) Indemnification Requirements. In connection with any claim for indemnification under this Section 15, the indemnified party must: (i) provide the indemnifying party prompt written notice of such claim; (ii) reasonably cooperate with the indemnifying party, at indemnified party's expense, in defense and settlement of such claim; (iii) give sole authority to the indemnifying party to defend or settle such claim; and (iv) make no admission of liability with respect to the claim. The indemnified party may, at its sole expense, actively participate in any suit or proceeding, through its own counsel.

16. Limitation of Liability.

(a) Waiver of Consequential Damages. Neither Springbrook nor any other person or entity involved in creating, producing, or delivering the Springbrook Services will be liable for any indirect, incidental, special, punitive, exemplary or consequential damages, including lost profits, loss of data or loss of goodwill, loss of revenue, service interruption, computer damage or system failure or the cost of substitute products or services, or other commercial or economic loss of any kind whatsoever, or any liability of Customer to a third party, arising out of or in connection with this Agreement or from the use of or inability to use the Springbrook Services, whether based on warranty, contract, tort (including negligence), product liability or any other legal theory, even if Springbrook was advised of the possibility of such damages. Some jurisdictions do not allow the exclusion or limitation of incidental, consequential or special damages, so the above limitations may not apply to Customer.

(b) Maximum Liability. In no event will Springbrook's aggregate liability hereunder to Customer or any third party arising out of or in connection with this Agreement or from the use of or inability to use the Springbrook Services, whether in contract, tort or under any other theory of liability, exceed the total amount paid by Customer in the twelve (12) month period preceding the incident. These limitations shall apply notwithstanding any failure of essential purpose of any remedy.

(c) If Customer or Authorized Users use the Cloud Service in any application or environment where failure could cause personal injury, loss of life, or other substantial harm, Customer assumes any associated risks and will indemnify Springbrook and hold it harmless against those risks.

17. Other Terms and Conditions.

(a) Dispute Resolution. This Agreement is governed by the laws of the State of Utah without regard for its conflict of laws principles. Any controversy or claim arising out of or relating to this Agreement, or the breach thereof, will be settled by arbitration administered by the American Arbitration Association under its Commercial Arbitration Rules, including the Emergency Interim Relief Procedures, and judgment on the award rendered by the arbitrator may be entered in any court having jurisdiction thereof. The number of arbitrators shall be one (1) unless the Parties mutually agree otherwise. The place of arbitration will be American Fork, Utah. Either party may apply to the

arbitrator for injunctive relief until the arbitration award is rendered or the controversy is otherwise resolved. Either Party also may, without waiving any remedy hereunder, seek from any court having jurisdiction any interim or provisional relief that is necessary to protect the rights or property of that party, pending the arbitrator's determination of the merits of the controversy. Each party will initially bear its own expenses and an equal share of the costs of the arbitration, but the prevailing party may be awarded its expenses, reasonable attorneys' fees, and costs.

(b) Other Agencies. Each Party understands and agrees that this Agreement may be used by other governmental agencies under substantially the same terms and conditions, excluding pricing, duration, scope of services to be provided, and other terms unique to the Customer. Each governmental agency desiring to accept this Agreement, and make an award thereof, shall do so independently of the Customer and/or any other governmental agency. Each governmental agency shall be responsible for its own purchases, and each shall be liable only for materials and/or services ordered and received by it, and no governmental agency, other than Customer, assumes any liability by virtue of this Agreement. This Agreement in no way restricts or interferes with the right of the Customer or any governmental agency to competitively procure any or all items. The foregoing does not authorize either Party to disclose Confidential Information of the other Party.

(c) Equitable Relief. The Recipient acknowledges that unauthorized disclosure of the Disclosing Party's Confidential Information or misappropriation or infringement of a Party's Intellectual Property Rights could cause substantial harm to the Disclosing Party or owner of such Intellectual Property Rights for which damages alone might not be a sufficient remedy and, therefore, that upon any such disclosure, misappropriation or infringement, the injured Party will be entitled to seek appropriate equitable relief in addition to whatever other remedies it might have at law or equity.

(d) Assignment. Springbrook may assign its rights and obligations hereunder for purposes of financing or pursuant to corporate transactions involving merger, acquisition, or the sale of all or substantially all of its stock or assets. Assignment by a Customer of its rights and obligations hereunder requires the advance written consent of Springbrook. Any attempted assignment or transfer, without such consent, will be void. Subject to the foregoing, this Agreement will bind and inure to the benefit of the parties, their respective successors and permitted assigns.

(e) Entire Agreement. This Agreement sets forth the entire agreement between the Parties and supersedes any and all prior agreements of the Parties with respect to the transactions set forth herein.

(f) Severability and Amendment If any particular provision of this Agreement is determined to be invalid or unenforceable, that determination will not affect the other provisions of this Agreement, which will be construed in all respects as if the invalid or unenforceable provision were omitted. No extension, modification, or amendment of this Agreement will be effective unless it is described in writing and signed by all Parties.

(g) Notice. Except as otherwise specified in this Agreement, all notices, permissions and approvals hereunder will be in writing and will be deemed to have been given upon: (i) personal delivery, (ii) the third business day after mailing by first class mail, or (iii) sending by confirmed email if sent during the recipient's normal business hours (or, if not, then on the next business day). Notices will be sent to the address specified by the recipient in writing when entering into this Agreement or establishing Customer's account for the Springbrook Services (or such other address as the recipient may thereafter specify by notice given in accordance with this Section 17).

(h) Compliance with Laws. Each party will comply with all applicable laws and regulations with respect to its activities under this Agreement including, but not limited to, export laws and regulations of the United States and other applicable jurisdictions. Without limiting the foregoing, Customer will not permit Authorized Users to access or use the Cloud Service or Cloud Software in violation of any U.S. export embargo, prohibition or restriction. Further, in connection with the services performed under this Agreement and Customer's use of the Cloud Services or Cloud Software, the Parties agree to comply with all applicable anti- corruption and anti-bribery laws, statutes, and regulations.

(i) Relationship of the Parties. This Agreement does not create a partnership, franchise, joint venture, agency, fiduciary or similar relationship between the parties.

(j) Waiver and Cumulative Remedies. No failure or delay by either party in exercising any right under this Agreement will constitute a waiver of that right. Other than as expressly stated herein, the remedies provided herein are in addition to, and not exclusive of, any other remedies of a party at law or in equity.

(k) Force Majeure. Springbrook will not be liable for any delay or failure to perform under this Agreement to the extent such delay or failure results from circumstances or causes beyond the reasonable control of Springbrook.

Exhibits Follow

EXHIBIT A
MAINTENANCE AND SUPPORT
AVAILABILTY

This Exhibit A is part of the Springbrook Cloud Service Master Agreement Terms and Conditions. It may be updated from time to time by Springbrook in its sole discretion.

I. SUPPORT POLICY

Updates
Updates may address security fixes, critical patches, general maintenance functionality, and documentation and shall be made available at Springbrook's discretion. Springbrook is under no obligation to develop any future functionality or enhancements unless otherwise specified in the Agreement. If an update for the Cloud Service is made available to Customer pursuant to this Support Policy, it will automatically replace the previous version of the applicable Cloud Service.

Support Commitment

In support of the Cloud Service, Springbrook will provide Customer with the following first line support: Telephone Support. Springbrook's Customer Resource Center (CRC), a live technical support facility, will be available to Customer from 5:00 a.m. until 5:00 p.m. Pacific time Monday through Friday, excluding Springbrook's observed holidays.

Email Support. Springbrook provides an electronic mail address (help@sprbrk.com) to which Customer may submit routine or non-critical support requests. Email Support Requests will be addressed by Springbrook during its regular business hours of 5:00 a.m. until 5:00 p.m. Pacific time Monday through Friday.

Online Support Materials. Springbrook will make available to Customer certain archived client-side software updates and other technical information in Springbrook's online support databases. This Online Support will be continuously available to Customers.

Upgrade/Downgrade of Severity Level

If, during the Support Request process, the issue either warrants assignment of a higher severity level than currently assigned or no longer warrants the severity level currently assigned based on its current impact on the production database, then the severity level will be upgraded or downgraded accordingly to the severity level that most appropriately reflects its current impact.

Third Party Product Support

If any third-party software is supplied by Springbrook, Springbrook disclaims all support obligations for such third-party software, unless expressly specified by Springbrook in Customer's Agreement.

Exclusions

The following Support Exclusions are not covered by this Support Policy: (a) Support required due to Customer's or any End User's or third party's misuse of the Services; (b) Support during times outside of Springbrook's regular business hours stated above; (c) Support necessitated by external factors outside of Springbrook's reasonable control, including any force majeure event or Internet access or related problems.

Response and Resolution Goals

Springbrook will respond to Customer's Support Requests in a manner appropriate for the severity of the reported issue and will use good faith efforts to achieve the goals listed below.

A. Critical Severity Level

Definition. System or application is non-functional or seriously affected and there is no reasonable workaround available (e.g., business is halted).

Response goal. Confirmation of receipt within 1 business hour. Update as information arrives or at the interval agreed with the Customer.

Resolution goal. Upon confirmation of receipt, Springbrook begins continuous work on the case. Springbrook will put forth the effort to provide a workaround, fix, or estimated completion date within 72 hours after the problem has been diagnosed and/or replicated, provided there is an agency representative available to assist with issue diagnosis and testing during the resolution process.

B. High Severity Level

Definition. System or application is affected and there is no workaround available, or the workaround is impractical (e.g., system response is very slow, day to day operations continue but are impacted by the work around).

Response goal. Confirmation of receipt within 4 business hours.

Resolution goal. Springbrook will put forth the effort to provide a workaround or fix or estimated completion date within 14 business days after the problem has been diagnosed and/or replicated.

C. Medium Severity Level

Definition. System or application feature is non-functional, and a convenient workaround exists (e.g., non-critical feature is unavailable or requires additional user intervention).

Response goal. Confirmation of receipt within 8 business hours.

Resolution goal. Springbrook will put forth the effort to provide a workaround or fix or estimated completion date within 21 business days after the problem has been diagnosed and/or replicated.

D. Low Severity Level

Definition. System or application feature works, but there is a minor problem (e.g., incorrect label, or cosmetic defect).

Response goal. Confirmation of receipt within 24 business hours

Resolution goal. Resolution for the issue may be released as a patch set or be incorporated into a future release of the product.

II. AVAILABILITY

Service Availability:

Springbrook will use commercially reasonable efforts to (a) provide bandwidth sufficient for Customer's use of the Cloud Service provided hereunder and in an applicable Order Form and (b) operate and manage the Cloud Service with a ninety-nine and one-half percent (99.5%) uptime goal (the "**Availability SLA**"), excluding situations identified as "Exclusions" below.

"Exclusions" means any outage that results from any of the following:

(a) Any maintenance performed by Springbrook during Springbrook's standard maintenance windows. Springbrook will notify Customer within forty-eight (48) hours of any standard maintenance and within twenty-four (24) hours for other non-standard emergency maintenance (collectively referred to herein as "**Scheduled Maintenance**").

(b) Customer's information content or application programming, or the acts or omissions of Customer or its agents, including, without limitation, the following:

1. Customer's failure to provide Springbrook with reasonable advance prior notice of any pending unusual large deployments of new nodes (e.g., adding over ten (10) percent total nodes in less than twenty-four (24) hours);
2. Customer's implementation of any significant configuration changes, including changes that lead to a greater than thirty percent (30%) change in a one week period or greater than fifty percent (50%) change in a one month period in the number of key objects in the system including but not limited to metrics, snapshots, nodes, events and business transactions;
3. Any misconfiguration by Customer (as determined in Springbrook's sole discretion), including, without limitation, configuration errors and bad or unintended usage of the Cloud Service; and
4. Force majeure or other circumstances beyond Springbrook's reasonable control that could not be avoided by its exercise of due care.

(c) Failures of the Internet backbone, telecommunications systems, ISP failures, or the network by which Customer connects to the Internet backbone or any other network unavailability.

(d) Any window of time when Customer agrees that Cloud Service availability/unavailability will not be monitored or counted.

(e) Any problems resulting from Customer combining or merging the Cloud Service with any hardware or software not supplied by Springbrook or not identified by Springbrook in the Specifications as being compatible with the Cloud Service.

(f) Interruptions or delays in providing the Cloud Service resulting from telecommunication or Internet service provider failures. Customer's or any third party's use of the Cloud Service in an unauthorized or unlawful manner.

Remedies for Excessive Downtime:

In the event the Availability of the Cloud Service falls below the Availability SLA in a given calendar month, Springbrook will pay Customer a service credit ("**Service Credit**") equal to the percentage of the fees set forth in the table below corresponding to the actual Availability of the Cloud Service during the applicable calendar month. Springbrook will apply any Service Credits only against future Cloud Service payments otherwise due from Customer. Service Credits will not entitle Customer to any refund or other payment from Springbrook. Service Credits may not be transferred or applied to any other account. Unless otherwise provided in this Agreement, Customer's sole and exclusive remedy for any unavailability, non-performance, or other failure by Springbrook to provide the Cloud Service is the receipt of a Service Credit (if eligible) in accordance with the terms of this Exhibit A.

System availability is measured by the following formula: x = (n - y) *100 / n

Notes:
(1) "x" is the uptime percentage; "n" is the total number of hours in the given calendar month minus Exclusions; and "y" is the total number of downtime hours in the given calendar month not caused by an Exclusion.

Service Availability	Percentage of Monthly Service Fees Credited
>99.5%	**0%**
95.0% - < 99.5%	**5% (max of $280)**
90.0% - < 95.0%	**10% (max of $560)**
80.0% - < 90.0%	**20% (max $840)**
70.0% - < 80.0%	**30% (max of $1,120)**
60.0% - < 70.0%	**40% (max of $1,400)**
< 50%	**50% (max of $2,800)**

Customer Account Login:
For Springbrook user interface access, Springbrook uses TLS 1.2 with AES 256 bit or similar encryption for protection of data in transit, which is supported by most modern browsers. Springbrook will also restrict applicable administrative user interface access to Customer corporate networks for additional security on written request by Customer.

Hosting:
Springbrook's SaaS platform (servers, infrastructure, and storage) for the Cloud Service is and will remain hosted in one of the largest data centers in North America, specifically designed and constructed to deliver world- class physical security, power availability, infrastructure flexibility and growth capacity. Springbrook's data center provider is and will remain SSAE 18 SOC2 compliant, meaning it has been fully independently audited to verify the validity and functionality of its control activities and processes. Every Server for the Services is and will remain operated in a fully redundant fail-over pair to ensure high availability. Data is and will remain backed up nightly, stored redundantly and will be restored rapidly in case of failure.
Security Patching and updates are actively evaluated by engineers and will be deployed based upon

the impact and risk and stability benefits they offer to Springbrook's SaaS platform and Customers.

Springbrook will attempt to provide customers reasonable prior notice to security changes, updates, and patches, unless the delay will lead to a significant risk of impact to customer data.

Fees:
Maintenance and Support Services, as described herein, are included in the Cloud Service Subscription for no additional fees, except as follows:

Springbrook will bill Customer on an hourly basis for the following services that are beyond the scope of standard Maintenance and Support Services;

(a) Maintenance or Support in cases where repeated operator-produced error by the same user continues to occur despite notification to Customer;

(b) Maintenance and Support associated with applications not purchased by Customer from Springbrook, as documented in an appropriate Order Form or Statement of Work;

(c) Maintenance and Support outside the scope of this Agreement;

(d) Maintenance and Support necessitated by Customer's failure to provide adequate internal controls to ensure the accuracy and appropriate use of the Cloud Software or Cloud Service and compliance with local, state and federal regulations and auditors requirements;

(e) Costs associated with Customer's creation or modification of data in Springbrook's database except through the appropriate use of the Cloud Software or Cloud Service;

(f) Costs associated with Customer's own actions to integrate the Cloud Software or Cloud Service with applications or services not purchased from Springbrook;

(g) Costs associated with Customer's failure to meet the terms and conditions of this Agreement;

(h) Costs associated with additional labor or out of pocket expenses incurred while providing support to Customer in cases where Springbrook has requested but Customer has denied remote access into a user workstation or the server housing the Cloud Software; and

(i) Labor and travel costs associated with providing on-site for services covered by this Agreement.

EXHIBIT B

ONLINE PAYMENTS SCHEDULE

1. Definitions.

"**Citizen**" means the person who uses Online Payments (as defined below) to complete a payment processing that results in the debiting or charging of an amount to such person's payment instrument and the crediting of funds to Customer.

"**Online Payments**" means an optional third-party add-on to the Cloud Software that Springbrook facilitates designed to collect payment information for the purpose of payment processing.

"**Payment Application(s)**" refers broadly to all third-party payment applications, gateway, processors, payment terminals, and service providers that store, process, or transmit cardholder data as part of authorization or settlement, where these payment applications are sold, distributed or licensed to Customer.

2. Online Payments.

(a) During the Term, and subject to compliance with the terms and conditions of this Exhibit, Springbrook will provide the right to access to, and use of, Online Payments to Customer's Citizens with an Online Payments enabled Account. For the avoidance of doubt, Springbrook is only facilitating access to and use of Online Payments and is not a provider of Online Payments.

(b) To facilitate payments, Customer will be required to provide Springbrook with certain Customer Data, including specifically, information that allows Springbrook to: (a) transmit Customer's identifying information to a Payment Application; (b) if applicable, receive appropriate payment authorization from a Payment Application; and (c) collect any other information that Customer or Payment Application requires of Springbrook in order to facilitate payment processing. Customer authorizes Springbrook to store, process, and transmit Customer Data as necessary for a Payment Application to facilitate payment processing between Customer and a third party designated by Customer. Unless otherwise provided, Online Payments will temporarily store information received from Customer, such as account information for a Payment Application only for the purpose of facilitating the payment processing.

(c) The payment processing facilitated through Online Payments is processing activities between Customer and a third party and/or Customer and a Payment Application, and not with Springbrook. Payment Applications are independent contractors and not agents, employees or subcontractors of Springbrook. Springbrook does not control and is not responsible for the payment methods made available by the Payment Applications through Cloud Software nor the Third-Party Services that are sold or purchased by Customer. Customer acknowledges and agrees that Springbrook cannot ensure that Citizen or third party will complete a payment processing or that it is authorized to do so.

(d) Springbrook will maintain a current PCI-DSS Attestation of Compliance ("AOC") which shall be available upon request to Customer once per year.

3. Additional Customer Responsibilities.

Springbrook's provision of Online Payments is conditioned on Customer's acknowledgement of and agreement of the following:

(a) Customer is solely responsible for registering and maintaining an account with Online Payments in order to facilitate the payment processing via Online Payments;

(b) Customer is solely responsible for complying with: (i) all laws applicable to the payment processing conducted by customer via Online Payments; (ii) all terms of use or other terms and conditions between Customer and Payment Applications.

(c) Customer is solely responsible for the acts and omissions of its Authorized Users in relation to their use of Online Payments and for ensuring that such use complies with the terms of the Agreement;

(d) Customer has exclusive control over and responsibility for the content, quality, and format of any payments processing it submits to be processed via Online Payments. Nothing in this Exhibit may be construed to make Springbrook a party to any payment processed by Online Payments, and Springbrook makes no representation or warranty regarding the payment processing sought to be affected by Customer's use of Online Payments; and

(e) Customer is solely responsible for any and all disputes with any Payment Applications or Citizens related to or in connection with a payment processing sought to be facilitated via Online Payments, including, but not limited to: (i) chargebacks; (ii) products or services not received; (iii) return of, delayed delivery of, or cancelled products or services; (iv) cancelled transactions; (v) duplicate transactions or charges; (vi) electronic debits and credits involving bank accounts, debit cards, credit cards, and check issuances; and (vii) amount of time to complete payment processing.

4. Payment Warranties; Disclaimers' Limitation of Liability.

(a) Springbrook Payments Warranty**.** The parties acknowledge and agree that, notwithstanding any of the provisions of the Agreement, Springbrook's sole and exclusive warranties with respect to Online Payments are set forth in the following sentence. Springbrook warrants that Online Payments as delivered to Customer and used in accordance with the Agreement and its applicable specifications will perform substantially in accordance with the specifications associated with the Software.

(b) Disclaimer**.** Except for the express warranties for the Cloud Software set forth above, Springbrook: (a) makes no additional representation or warrant of any kind-whether express, implied in fact or by operation of law, or statutory-with respect to Online Payments; (b) disclaims all implied warranties, including, but not limited to, merchantability, fitness for a particular purpose, non-infringement and title; and (c) does not warrant that Online Payments will be error-free or meet Customer's requirements. Customer has no right to make or pass on any representation or warranty on behalf of Springbrook to any third party.

(c) Limitation of Liability**.** Springbrook shall not be responsible or liable for any claims, demands and damages (actual and consequential) arising out of or in any way connected with a dispute that may arise between Customer and a Citizen, and /or Customer and a Payment Application

regarding the payment processing ("Payment Processing Disputes"), and Customer hereby agrees that it will not bring or assert any action, claim or cause of action in jurisdiction or forum against Springbrook arising from or relating to a Payment Processing Dispute.

5. Third Party Claims.

In addition to the third party claims obligations and subject to the indemnification procedures under the Agreement, Customer will indemnify and defend Springbrook against, any Claim to the extent arising from or related to: (a) improper use of Online Payments by Customer or its Authorized Users or Citizens; (b) any breach by Customer of its obligations hereunder; (c) the nature and content of all cardholder data or any related data thereto provided by customer, its Authorized Users or Citizens through use of Online Payments; (D) violation of any law or the rights of a third party by Customer through its use of Online Payments and/or the actions or inactions of any third party to whom Customer grants permissions to use Customer's Account or access Online Payments on Customer's behalf; and (e) the terms of an agreement between Customer and a Citizen, or Customer and a Payment Application.

SPRINGBROOK PROFESSIONAL SERVICES AGREEMENT
TERMS AND CONDITIONS

These Terms and Conditions, together with each Order Form entered into by the Parties that references such Terms and Conditions, constitute a binding agreement ("**Agreement**") by and between Springbrook Holding Company, LLC, a Delaware corporation and its Affiliates ("**Springbrook**") and the Customer identified on the Order Form ("**Customer**"). These Terms and Conditions become effective as of the date of the related Order Form. Each of Springbrook and Customer is referred to herein individually as a "**Party**" and collectively as the "**Parties**."

The Agreement governs the provision by Springbrook, and the receipt by Customer, of the Professional Services (defined below) that Springbrook provides to Customer.

1. SCOPE OF SERVICES.

(a) Subject to compliance with the terms and conditions of the Agreement, Springbrook will provide Customer with certain skilled services, such as software implementation, configuration, conversion, customization, upgrade, data extraction, diagnostic, training and/or other services (collectively "**Professional Services**") as specified in the applicable order form executed by Springbrook and Customer (each an "**Order Form**"). Any such Order Form must reference these Terms and Conditions.

(b) Each Order Form, or will include, at a minimum: (i) a description of the Professional Services and any deliverables and/or materials to be provided to Customer (each, a "**Deliverable**"); (ii) applicable fees and payment terms for such Professional Services, if not elsewhere specified, and (iii) other details regarding the Professional Services. All Order Forms will be subject to these Terms and Conditions.

(c) For certain types of Professional Services, Springbrook will prepare and make available to Customer a scope of work or cloud migration project packet before commencing such services.

(d) Customer acknowledges that data conversion services are limited to three (3) years of data.

2. CHANGE ORDERS.

If the Customer or Springbrook requests a change in any of the specifications, requirements, Deliverables, or scope (including drawings and designs) of the Professional Services described in any Order Form, the Party seeking the change will propose the applicable changes by written notice.

Within a reasonable amount of time (not to exceed four (4) business days in the case of implementation services) after receipt of written notice, each Party's designated personnel will meet, either in person or via telephone conference, to discuss and agree upon any proposed changes. Thereafter, Springbrook will prepare a change order describing the proposed changes and any associated changes in the Deliverables,

Deliverable schedule, fees and/or expenses, or other aspects of the change (each, a "Change Order").

Change Orders will not be binding until they are executed by both parties. Executed Change Orders will be deemed part of, and subject to, the Agreement. If the parties disagree about the proposed changes, they will promptly escalate the change request to their respective senior management for resolution.

In the event the Customer requires significant changes (either individually or cumulatively across Change Order(s)) which Springbrook reasonably determines are (i) a material modification of the nature or scope of Professional Services being purchased and/or (ii) significantly outside any Supported Configuration (as defined below), Springbrook may, upon no less than thirty (30) days' notice to the Customer, suspend or terminate the applicable Order Form and/or Change Order(s). In the event of any such termination or suspension, the parties will work together in finalizing agreed-upon Deliverables. Unless otherwise expressly agreed to by the Parties at the time of any such material change, Springbrook will not be deemed to have waived any of the Customer's payment obligations in respect of completed Deliverables. A "Supported Configuration" means a software configuration that can be consistently supported by Springbrook via APIs, does not require direct database changes and is capable of being tested and maintained by Springbrook.

3. ACCEPTANCE.

(a) Acceptance. Unless indicated to the contrary in the Order Form, the Professional Services and accompanying Deliverables will be deemed accepted upon delivery.

(b) Review. Review and testing of Deliverables, if so indicated in the Order Form, shall be conducted pursuant to the acceptance criteria or test plans mutually agreed upon in writing by the Parties and shall take place within the mutually agreed timeframes established in the project plan or schedule. Absent mutual agreement to the contrary, Customer will provide Springbrook with written notification of acceptance or rejection for each Deliverable within five (5) business days of delivery (the "**Acceptance Period**"). Failure to reject a Deliverable within the Acceptance Period will be deemed acceptance. If Customer, in its reasonable and good faith judgment, determines that any submitted Deliverable does not satisfy mutually agreed-upon acceptance criteria, Customer must so notify Springbrook in writing before the end of the Acceptance Period, specifying the deficiencies in detail. Springbrook will use commercially reasonable efforts to correct such deficiencies and resubmit the Deliverable to Customer as soon as practicable.

4. OWNERSHIP RIGHTS AND LICENSES.

(a) License for Deliverables. Subject to these Terms and Conditions and upon payment of fees due under an applicable Order Form, Springbrook grants Customer a limited, non-exclusive, worldwide, nontransferable, terminable license to use the Deliverables solely for Customer's internal operations in connection with authorized use of the applicable Springbrook services. Notwithstanding any other provision of these terms and conditions, nothing herein is intended to assign or transfer any intellectual property rights in the proprietary tools, libraries, know-how, techniques, and expertise ("**Tools**") used by Springbrook to develop the Deliverables and/or provide the Professional Services.

(b) Proprietary Rights. As between the parties, Springbrook shall solely and exclusively own all right, title, and interest in the Professional Services, Deliverables, and any software provided by Springbrook, including all modifications, enhancements, and derivative works thereof and any other of Springbrook's products or services, whether created by Springbrook or Customer, together with all intellectual property and other proprietary rights therein. Customer hereby makes all assignments necessary to accomplish the foregoing ownership. None of the Professional Services or Deliverables will be deemed to constitute work product or work-for-hire inuring to the benefit of Customer.

(c) No Reverse Engineering. Deliverables constitute Springbrook Confidential Information and Customer may not reverse engineer, decompile, disassemble, translate, copy, reproduce, display, publish, create derivative works of, assign, sell, lease, rent, license or grant any interest in the Deliverables to any party except as expressly permitted by Springbrook.

(d) Conflicting Language. In the event any language conflicting with this Section 4 is added to any Order Form or Change Order, the parties expressly agree that such statement will have no effect on Springbrook's rights as set out herein.

5. COOPERATION.

(a) Customer Cooperation. Springbrook's ability to successfully perform the Professional Services is dependent upon Customer's reasonable and good faith cooperation by, without limitation:
(i) allocating sufficient resources and timely performing any tasks reasonably necessary to enable Springbrook to perform its obligations under each Order Form; (ii) timely delivering any materials and other obligations required under each Order Form; (iii) providing Springbrook with access to Customer's sites and facilities during Customer's normal business hours and as otherwise reasonably required by Springbrook to perform the Professional Services; (iv) timely responding to Springbrook's inquiries related to the Professional Services; (v) assigning a project manager as a primary point of contact for Springbrook; (vi) actively participating in scheduled project meetings; and (vii) providing, in a timely manner and at no charge to Springbrook, office workspace, telephone and other facilities, suitably configured computer equipment, access to Customer's appropriate and knowledgeable employees and continuous administrative access to Customer's accounts, and coordination of onsite and telephonic meetings all as reasonably required by Springbrook.

(b) Customer Delays. Delays in Springbrook's provision of the Professional Services caused by Customer (each, a "Delay"), during any implementation period may have adverse collateral effects on Springbrook's overall work schedule. If Springbrook's performance of any of its obligations in respect of the Professional Services is prevented or delayed by any act or omission by Customer, or failure by Customer to perform any of its obligations hereunder the Agreement, such as those identified in subsection (a) above:

- Springbrook shall, without limiting its other rights or remedies, have the right to suspend performance of the Professional Services and relieve it from the

performance of any of its obligations until Customer remedies the Delay.

- Although Springbrook will use its commercially reasonable efforts to promptly resume work following a Delay, Customer acknowledges that schedules for the Professional Services may be delayed by more than the number of days delayed by Customer.

- Customer agrees that if additional time is required to complete the Professional Services as the result of Customer Delays, such time will be charged to Customer at Springbrook's then-current time-and-materials rates.

(c) Customer Postponements. If Customer wishes to postpone or fails to be available for a scheduled meeting, training session or other activity, it shall provide Springbrook with no less than two (2) business days' written notice of such postponement or non-availability. If Customer fails to provide such notice in the required time period, Springbrook's shall invoice the Customer for lost or delayed scheduled time, with a minimum charge of two (2) hours. Additional charges may apply based on the resources and preparation required for the meeting. Such liability will be in addition to the charge for the services at the time they are performed.

6. PAYMENT TERMS.

(a) Invoicing and Payment. Customer will be invoiced for the amounts and at the times set forth in the Order Form. Professional Services fees are due and payable within thirty (30) days of the invoice date.

(b) Billing Info & Overdue Charges. Customer is responsible for keeping Springbrook accurately and fully informed of Customer's billing and contact information, including providing any purchase order numbers in advance of invoice issuance. If any Professional Service fees are not received from Customer by the due date, they will accrue interest at the rate of one and a half percent (1.5%) of the outstanding balance per month, or the maximum rate permitted by law, whichever is lower.

(c) Overdue Payments. If any amount owing by Customer hereunder for any of the Professional Services is thirty (30) or more days overdue, Springbrook may, without limiting its other rights and remedies, accelerate Customer's other unpaid fee obligations, if any, hereunder (including any Order Form) so that all such obligations become immediately due and payable, suspend the Professional Services and/or stop performance of the Professional Services until such amounts are paid in full.

(d) Taxes. Professional Services fees do not include any taxes, levies, duties, or similar governmental assessments of any nature, including but not limited to value-added, sales, use or withholding taxes, assessable by any local, state, provincial, federal, or foreign jurisdiction (collectively,

"**Taxes**"). Customer is responsible for paying all Taxes. If Springbrook has the legal obligation to pay or collect Taxes for which Customer is responsible under this paragraph, the appropriate amount will be invoiced to and paid by Customer, unless Customer provides Springbrook with a valid tax exemption certificate authorized by the appropriate taxing authority prior to invoice issuance. For clarity, Springbrook is solely responsible for taxes assessable against it based on Springbrook's income, property, and employees.

7. WARRANTY.

Springbrook warrants that the Professional Services will be performed for and delivered to Customer in a good, diligent, workmanlike manner, consistent with the practices and standards of care generally accepted within and expected of Springbrook's industry. For any breach of the above warranty, Customer's sole remedy will be the re-performance of the applicable Professional Services by Springbrook. This warranty will be in effect for a period of ninety (90) days from acceptance of any Professional Services.

8. DISCLAIMER.

Section 7 sets forth the sole and exclusive warranties and remedies related to the Professional Services, Deliverables and Tools performed or provided hereunder. TO THE MAXIMUM EXTENT PERMITTED BY APPLICABLE LAW, EXCEPT AS EXPRESSLY PROVIDED HEREIN, SPRINGBROOK DOES NOT MAKE ANY WARRANTIES OF ANY KIND, WHETHER EXPRESS, IMPLIED, STATUTORY OR OTHERWISE, AND SPRINGBROOK SPECIFICALLY DISCLAIMS ALL IMPLIED WARRANTIES, INCLUDING ANY WARRANTIES OF MERCHANTABILITY, NON-INFRINGEMENT OR FITNESS FOR A PARTICULAR PURPOSE, OR ANY WARRANTIES ARISING OUT OF COURSE OF DEALING OR USAGE OF TRADE. EXCEPT AS PROVIDED HEREIN, THE PROFESSIONAL SERVICES AND DELIVERABLES PROVIDED TO CUSTOMER ARE ON AN "AS IS" AND "AS AVAILABLE" BASIS.

9. TERM AND TERMINATION.

(a) Term. The Agreement commences on the date of last signature on the first Order Form issued hereunder ("**Effective Date**") and will remain in effect until terminated in accordance with this section (the "**Term**"). Each Order Form will commence on the date it is last signed and will expire upon completion of the project set forth in the applicable Order Form.

(b) Cancellation. Once signed by both parties, an Order Form will be non-cancellable, except as otherwise explicitly stated in such Order Form.

(c) Termination. This Agreement will terminate automatically when any agreement for Cloud Services to which this Agreement is related and/or all Order Forms referencing this Agreement are terminated or expired. Either Party may terminate this Agreement for cause: (i) upon thirty (30) days' notice to the other party of a material breach if such breach remains uncured at the expiration of such period, or (ii) if the other Party becomes the subject of a petition in bankruptcy or any other proceeding relating to insolvency, receivership, liquidation or assignment for the benefit of creditors.

(d) Effect of Termination. For the avoidance of doubt, termination under any of the foregoing subsections will not affect Customer's outstanding payment obligations to Springbrook in respect of Professional Services and Deliverables provided prior to such termination. Upon any termination of this Agreement, Customer will have no rights to continue receipt of any on-going or additional Professional Services, whether or not such Professional Services are completed prior to such termination.

(e) Survival. All fees that have accrued as of such expiration or termination, and Sections 1, 5, 8, 9-12, 13(c), 14(d), 15, 16 and 17 will survive any expiration or termination hereof.

10. CONFIDENTIALITY.

(a) Confidentiality Term. The obligations described in this Section commence on the Effective Date and will continue until two (2) years following any termination or expiration of this Agreement ("**Confidentiality Term**").

(b) Definitions. "**Disclosing Party**" and "**Recipient**" refer respectively to the party which discloses information and the party to which information is disclosed in a given exchange. "**Confidential Information**" means all disclosed information relating in whole or in part to non-public data, proprietary data compilations, computer source codes, compiled or object codes, scripted programming statements, byte codes or data codes, entity-relation or workflow diagrams, financial records or information, client records or information, organizational or personnel information, business plans, or works-in-progress, even where such works, when completed, would not necessarily comprise Confidential Information. The foregoing listing is not intended by the Parties to be comprehensive, and any information which Disclosing Party marks or otherwise designates as "Confidential" or "Proprietary" will be deemed and treated as Confidential Information, as will information that would reasonably be considered to be confidential given its nature and the circumstances under which it is disclosed. Information which qualifies as Confidential Information may be presented to Recipient in oral, written, graphic, and/or machine-readable formats. Regardless of presentation format, such information will be deemed and treated as Confidential Information.

(c) Confidentiality Obligations. During the Confidentiality Term (as defined below) and subject to the other terms of this Agreement (including Springbrook's Privacy Policy, accessible at https://sprbrk.box.com/v/sprbrk-privacy-policy, which URL and its content may be updated from time to time by Springbrook), Recipient will protect the confidentiality of Confidential Information using the same degree of care that it uses to protect its own information of similar importance, but will in any case use no less than a reasonable degree of care to protect Confidential Information. Recipient will not directly or indirectly disclose Confidential Information or any part thereof to any third party without Disclosing Party's advance express written authorization to do so. Recipient may disclose Confidential Information only to its employees, contractors, or advisors on a need-to-know basis and who are bound by confidentiality and non-use restrictions at least as stringent as those contained herein. In responding to a request for Confidential Information, Recipient will cooperate with Disclosing

Party, in a timely fashion and in a manner consistent with applicable laws, to protect the Confidential Information to the fullest extent possible.

(d) Legally Compelled Information. In the event the Recipient becomes legally compelled (by deposition, interrogatory, requests for documents, subpoena, civil investigative demand or similar process) to disclose any Confidential Information, or the Recipient determines that it is obligated by law, rule, statute or governmental regulation to disclose any of the Confidential Information, the Recipient shall provide the Disclosing Party with prompt written notice of such requirement so that the Disclosing Party, if possible, may seek a protective order or other appropriate remedy and/or waive compliance with the terms of this Agreement. In the event that such protective order or other remedy is not obtained, the Recipient agrees to furnish only that portion of the Confidential Information that it is legally required to furnish and to exercise reasonable efforts to obtain assurance that confidential treatment will be accorded such Confidential Information. A Party's obligations hereunder with respect to legally compelled information shall continue to be applicable for all other purposes.

(e) Publicity. During the Term of this Agreement, including the term of any amendment hereto, Springbrook may publicly disclose its ongoing business relationship with Customer. Such disclosures may indicate Customer's identity and the Springbrook Services provided or contracted to be provided to Customer. These disclosures may include press releases or other communications to media, display on Springbrook web sites, or use in other marketing activities, but will not include non-public information or indicate Customer's express endorsement of Springbrook's products or services without Customer's prior written authorization.

(f) Customer's Confidential Information. Springbrook will have the right to use any Customer Confidential Information solely for providing the Professional Services to Customer hereunder. Notwithstanding the foregoing, Springbrook may use aggregate Customer Confidential Information for Springbrook development, internal training, and other reasonable business purposes not specific to Customer or its End Users.

11. LIMITATION OF LIABILITY.

(a) Waiver of Consequential Damages. Neither Springbrook nor any other person or entity involved in creating, producing, or delivering the Professional Services, including any Deliverables, will be liable for any indirect, incidental, special, punitive, exemplary or consequential damages, including lost profits, loss of data or loss of goodwill, loss of revenue, service interruption, computer damage or system failure or the cost of substitute products or services, or other commercial or economic loss of any kind whatsoever, or any liability of Customer to a third party, arising out of or in connection with this Agreement or from the use of or inability to use the Professional Services, whether based on warranty, contract, tort (including negligence), product liability or any other legal theory, even if Springbrook was advised of the possibility of such damages. Some jurisdictions do not allow the exclusion or limitation of incidental, consequential or special damages, so the above limitations may not apply to Customer.

(b) In no event will Springbrook's aggregate liability hereunder to Customer or any third party arising out of or in connection with this Agreement or from the use of or inability to use the Professional

Services, whether in contract, tort or under any other theory of liability, exceed the total amount paid by Customer in the twelve (12) month period preceding the incident. These limitations shall apply notwithstanding any failure of essential purpose of any remedy.

12. GENERAL.

(a) Notice. Except as otherwise specified in this Agreement, all notices, permissions and approvals hereunder must be in writing and will be deemed to have been given upon: (i) personal delivery, (ii) the third business day after mailing by first class mail, or (iii) sending by confirmed email if sent during the recipient's normal business hours (or, if not, then on the next business day). Notices will be sent to the address specified by the recipient in writing when entering into this Agreement or establishing Customer's account for the Professional Services (or such other address as the recipient may thereafter specify by notice given in accordance with this Section 12(a)). Customer's email address for communication and notice purposes relating to this Agreement will be set forth on the Order Form (or subsequent email addresses as advised by Customer). Customer agrees to accept emails from Springbrook at the e-mail address specified in the Order Form.

(b) Compliance with Laws. Each party will comply with all applicable laws and regulations with respect to its activities under this Agreement including, but not limited to, the export laws and regulations of the United States and other applicable jurisdictions.

(c) Relationship of Parties. Springbrook's relationship with Customer pursuant to this Agreement will be that of an independent contractor. Neither party will have any authority to bind the other, to assume or create any obligation, to enter into any agreements, or to make any warranties or representations on behalf of the other. Nothing in this Agreement will be deemed to create any agency, partnership, or joint venture relationship between the parties.

(d) Use of Contractors. Springbrook reserves the right to use third parties (who are under a covenant of confidentiality with Springbrook), including, but not limited to, offshore subcontractors to assist with the Professional Services, including, without limitation, any data migration, configuration, implementation, and custom code development processes.

(e) Waiver and Cumulative Remedies. No failure or delay by either party in exercising any right under this Agreement will constitute a waiver of that right. Other than as expressly stated herein, the remedies provided herein are in addition to, and not exclusive of, any other remedies of a party at law or in equity.

(f) Severability. If any provision of this Agreement is held by a court of competent jurisdiction to be contrary to law, the provision will be modified by the court and interpreted so as best to accomplish the objectives of the original provision to the fullest extent permitted by law, and the remaining provisions of this Agreement will remain in effect.

(g) Assignment. Customer may not assign or transfer this Agreement or any Order Form hereunder,

whether by operation of law or otherwise, without the prior written consent of Springbrook. Any attempted assignment or transfer, without such consent, will be void. Subject to the foregoing, this Agreement will bind and inure to the benefit of the parties, their respective successors and permitted assigns.

(h) Force Majeure. Springbrook will not be liable for any delay or failure to perform under this Agreement to the extent such delay or failure results from circumstances or causes beyond the reasonable control of Springbrook.

(i) Dispute Resolution This Agreement is governed by the laws of the State of Utah without regard for its conflict of laws principles. Any controversy or claim arising out of or relating to this Agreement, or the breach thereof, will be settled by arbitration administered by the American Arbitration Association under its Commercial Arbitration Rules, including the Emergency Interim Relief Procedures, and judgment on the award rendered by the arbitrator may be entered in any court having jurisdiction thereof. The number of arbitrators shall be one (1) unless the Parties mutually agree otherwise. The place of arbitration will be the State of Utah. Either party may apply to the arbitrator for injunctive relief until the arbitration award is rendered or the controversy is otherwise resolved. Either Party also may, without waiving any remedy hereunder, seek from any court having jurisdiction any interim or provisional relief that is necessary to protect the rights or property of that party, pending the arbitrator's determination of the merits of the controversy. Each party will initially bear its own expenses and an equal share of the costs of the arbitration, but the prevailing party may be awarded its expenses, reasonable attorneys' fees, and costs.

(j) Entire Agreement. This Agreement constitutes the entire agreement between the Parties concerning its subject matter and supersedes all prior communications, agreements, proposals, or representations, written or oral, concerning its subject matter. Notwithstanding any language to the contrary therein, no additional or conflicting terms or conditions stated in any master agreement to which this Agreement is incorporated, any Customer Order Form or other order documentation, will be incorporated into or form any part of this Agreement unless expressly agreed to by both parties in a mutually signed writing, and all such terms or conditions will be null. Under no circumstances will the terms, conditions or provisions of any RFP, purchase order, invoice or administrative document issued by Customer in connection with this Agreement be deemed to modify, alter, or expand this Agreement, regardless of any failure of Springbrook to object to such terms, provisions, or conditions. No other act, document, usage, custom or waiver will be deemed to amend or modify this Agreement unless agreed to in writing signed by a duly authorized representative of both parties.



Quoted By Derek Vo
Quote Expiration 3/7/27
Quote Name

Billing Address:
Town Of Jerome
Po Box 335
Jerome AZ 86331-0335

Tyler Annual Software – SaaS Description	List Price	Discount	Annual
ERP Pro			
ERP Pro 10 Financial Management Suite			
AP Automation Capture with Disbursements	$ 4,500	$ 900	$ 3,600
Core Financials	$ 10,285	$ 2,057	$ 8,228
Human Resources Management (Includes Position Budgeting)	$ 7,070	$ 1,414	$ 5,656
Employee Access Pro	$ 0	$ 0	$ 0
Employee Access Pro Time & Attendance	$ 1,243	$ 249	$ 994
Accounts Receivable	$ 1,945	$ 389	$ 1,556
ERP Pro 10 Customer Relationship Management Suite			
Utility Billing Water/Gas	$ 6,427	$ 1,285	$ 5,142
Smart Meter Access	$ 780	$ 156	$ 624
Cashiering	$ 1,415	$ 283	$ 1,132
Utility Access	$ 480	$ 96	$ 384

Tyler Annual Software – SaaS Description	List Price	Discount	Annual
Service Orders Mobile	$ 643	$ 129	$ 514
Tyler One			
Permitting & Licensing Pro			
Permitting	$ 4,344	$ 869	$ 3,475
Licensing	$ 4,344	$ 869	$ 3,475
Collaborator Access	$ 0	$ 0	$ 0
Public Access	$ 0	$ 0	$ 0
Request Manager	$ 0	$ 0	$ 0
Content Manager Suite			
Content Manager Core	$ 3,537	$ 707	$ 2,830
TOTAL:	**$ 47,013**	**$ 9,403**	**$ 37,610**
Term # of Years:	**3**		

Tyler Fees per Transaction Description	Net Unit Price
ERP Pro	
ERP Pro 10 Financial Management Suite	
AP Automation Disbursements	$ 0.00
ERP Pro 10 Customer Relationship Management Suite	
Utility Access Transactions	$ 2.00

Third Party Software & Hardware Description	Quantity	Unit Price	Extended Price	Annual
ERP Pro				
Third Party Software				

Third Party Software & Hardware Description	Quantity	Unit Price	Extended Price	Annual
Third Party Verification Services - Work Number by Equifax	1	$ 0	$ 0	$ 0
TOTAL:			**$ 0**	**$ 0**

Services Description	Hours/Units	Price	Discount	Extended Price
ERP Pro 10 Financial Management Suite				
Professional Services	255	$ 36,975	$ 0	$ 36,975
Data Conversion Services		$ 9,250	$ 4,625	$ 4,625
Project Management	1	$ 1,500	$ 1,500	$ 0
ERP Pro 10 Customer Relationship Management Suite				
Data Conversion Services		$ 6,000	$ 3,000	$ 3,000
Professional Services	146	$ 21,170	$ 0	$ 21,170
Project Management	1	$ 1,250	$ 1,250	$ 0
Permitting & Licensing Pro				
Professional Services	48	$ 6,960	$ 0	$ 6,960
Project Management	1	$ 2,500	$ 2,500	$ 0
Content Manager Suite				
Professional Services	32	$ 4,640	$ 0	$ 4,640
Project Management	1	$ 1,500	$ 1,500	$ 0
TOTAL:		**$ 91,745**	**$ 14,375**	**$ 77,370**

Summary	One Time Fees	Recurring Fees
Total SaaS		$ 37,610
Total Third Party Hardware, Software, Services	$ 0	$ 0
Total Tyler Services	$ 77,370	
Summary Total	**$ 77,370**	**$ 37,610**

Optional Tyler Annual Software – SaaS Description	List Price	Discount	Annual
ERP Pro			
ERP Pro 10 Financial Management Suite			
Applicant Tracking	$ 1,060	$ 212	$ 848
Applicant Tracking Interface	$ 707	$ 141	$ 566
Benefits Enrollment	$ 1,650	$ 330	$ 1,320
Electronic Time Clock Interface	$ 1,061	$ 212	$ 849
Fixed Assets	$ 1,077	$ 215	$ 862
Grants Management	$ 1,029	$ 206	$ 823
Project Accounting	$ 2,312	$ 462	$ 1,850
ePurchasing	$ 2,000	$ 400	$ 1,600
Purchasing	$ 3,076	$ 615	$ 2,461
Tyler One			
Permitting & Licensing Pro			
Code Enforcement	$ 4,344	$ 869	$ 3,475
Electronic Plan Review	$ 2,172	$ 434	$ 1,738
Collaborator Access	$ 0	$ 0	$ 0
TOTAL:	**$ 20,488**	**$ 4,096**	**$ 16,392**

Optional Services Description	Hours/Units	Extended Price
ERP Pro 10 Financial Management Suite		
Professional Services	88	$ 12,760
Project Management	1	$ 1,500
Permitting & Licensing Pro		
Professional Services	30	$ 4,350
Project Management	1	$ 2,500
TOTAL:		**$ 21,110**

Comments

Services Discount: Discounted 57 hours of services, but Tyler will deliver the full 538 hours.

Work will be delivered remotely unless otherwise noted in this agreement.

SaaS is considered a term of one year unless otherwise indicated.

Third Party Verification Services Work Number by Equifax	Third Party Verification Services will be provided pursuant to the Equifax Verification Terms of Service, and Client will comply with such terms and obligations of furnishers under the FCRA, in each case, found at https://www.tylertech.com/client-terms/equifax-verification-terms-of-service.
Smart Meter Access	Smart Meter Access provides the ability to view AMI data in a chart form thru Utility Access. It provides citizen transparency to track and proactively manage consumption and citizens can opt in to receive consumption notifications and leak alerts. Note: Notifications are billed out quarterly as incurred at $0.10 per call or text. Your use of Smart Meter Access is subject to the following terms: https://www.tylertech.com/terms/twilio-terms-of-use
AP Automation Capture with Disbursements	A fully automated vendor payment system, including an automated invoice capture system, invoice approval system, AP Invoice Access. Tyler Software may include artificial intelligence ("AI") features that are provided as an administrative convenience, designed to analyze data or make suggestions, subject to changing laws applicable in your local jurisdiction. Client is responsible for independently validating the accuracy of data analyzed or suggestions provided via AI features and using such features only to the extent permissible under applicable law. Your year one annual fee for AP Automation Capture is based on expected AP Automation Disbursements use. If, through no fault of Tyler, you do not use AP Automation Disbursements within six (6) months of the date of availability, or do not use AP Automation Disbursements for at least fifty percent (50%) of invoice volume, Tyler reserves the right to adjust pricing of AP Automation Capture at the end of your annual term. We will contact you to communicate the new pricing before we apply it.
Fraud, Risk & Compliance – Finance	Included with AP Automation Capture with Disbursements
Cashiering	Cashiering supports credit/debit cards, is PCI Compliant, and includes a cash collection interface and a cashiering receipt import.
Utility Access	Displays the current status (late, cut off etc), the action needed to avoid penalty, current balance, deposits on file (optional), last payment date, last payment amount, payment arrangements on file, last bill amount, last bill date, bill due date, contracts on file and status, transaction history (online payments). Payment packet is created to be imported to utility system. Address information includes legal description, precinct, school district, and services at address(subject to data availability). Includes consumption history by service (including graphs), request for service (optional), information change request (optional), security -SSL (secure socket layer).

Utility Access Transactions	Note that the customer pays a fee per transaction for payment on-line.
Human Resources Management / Payroll Data Conversion	Includes employee data, current calendar year balanced transactions, and unlimited unbalanced transaction history.
Financial Management Data Conversion	Includes Chart of Accounts, General Ledger, Accounts Payable, current fiscal year balanced transactions, and unlimited unbalanced transaction history.
Accounts Receivable Data Conversion	Includes master files (contacts properties)
Utilities Data Conversion	Includes contacts/properties/accounts, meters, transaction/consumption/read history, metered services, non-metered service. Balanced transactions converted from current calendar year plus prior 2 years. Unlimited history imported upon request.
Utility Billing Water/Gas	Includes Collections, Tax Lien Process and Import, a Standard Forms Package, Output Director, one Utility Handheld Meter-Reader Interface, Tyler University, and Fraud, Risk & Compliance.
Core Financials	Includes General Ledger, Budget Prep, Bank Recon, AP, CellSense, a Standard Forms Pkg, Output Director, Positive Pay, Secure Signatures, Tyler University, and Fraud, Risk & Compliance.
Human Resources Management (Includes Position Budgeting)	Includes Position Budgeting, Tyler University, and Fraud, Risk & Compliance.
AP Automation Disbursements	Expedited disbursement options available to vendors include instant transfer to a bank account, PayPal, Venmo and fast ACH where fees may apply. No fee options include standard ACH, and physical checks. All disbursements will be made pursuant to the terms and conditions found at https://www.tylertech.com/client-terms/ap-automation-disbursements-software-and-services-terms-of-use

NOTWITHSTANDING ANYTHING TO THE CONTRARY, WITH RESPECT TO ALL CYBERSECURITY OFFERINGS, INCLUDING FRAUD, RISK & COMPLIANCE, (A) TYLER DISCLAIMS ALL REPRESENTATIONS AND WARRANTIES, INCLUDING, WITHOUT LIMITATION, ANY WARRANTY AS TO OUTCOMES OR ERRORS AND ANY IMPLIED WARRANTY OF MERCHANTABILITY OR FITNESS FOR A PARTICULAR PURPOSE, (B) IN NO EVENT WILL TYLER BE LIABLE FOR THE ACTIONS OF ANY MALICIOUS OR CRIMINAL ACTORS, AND (C) TYLER DOES NOT WARRANT THAT SUCH OFFERINGS WILL PREVENT A BREACH OF SYSTEM SECURITY FROM OCCURRING.